https://tractormanualz.com

BARBER-GREENE®

A Division of Caterpillar Paving Products Inc.

Operation & Maintenance Manual

SRG1/SRG2 Screed

SRG1X100-UP
SRG2X100-UP

https://tractormanualz.com

TABLE OF CONTENTS

https://tractormanualz.com

RECEIVING MACHINE

This manual has been prepared to assist you in the initial start-up of the Extend-A-Mat Screed and in its proper operation and maintenance. It is important that all persons that come in contact with the screed, whether in operating or maintenance responsibility, be thoroughly familiar with the contents of this manual.

Barber-Greene's design and manufacturing experience, since 1916, has been incorporated into this screed and its rugged design and ease of maintenance, will enable it to deliver many years of trouble free service.

Your Extend-A-Mat Screed was carefully inspected, and properly loaded at the Factory. The entire shipment, including loose parts, was thoroughly checked before it was released to the transit company.

Upon receiving the screed, BEFORE UNLOADING, carefully inspect it for any loss or damage which may have occured during transit. Check your shipment against the freight bill, or against the packing list.

If any loss or damage is discovered, immediatly notify the transportation company's agent who will give you the proper forms for making a claim.

Before starting operations with your new screed, contact your nearest Barber-Greene distributor. If possible, give him several days notice prior to your planned first day of operation. He can provide qualified service department personal to assist you with start up, and to discuss with you machine capabilities, safe operation, and maintenance program.

As with any piece of machinery, proper operation and proper lubrication are critical. Inspection of the machine before operation and lubrication on a scheduled basis, will pay dividends in the field.

The parts in your Barber-Greene screed were designed to specific tolerances. Only an exact Barber-Greene replacement part will function properly. Genuine replacement parts may be ordered from your nearest Barber-Greene distributor. His large inventory of replacement parts can help minimize "downtime" at the job site.

Our interest in you and your machine extends beyond the purchase.We are genuinely interested in receiving your comments and suggestions concerning its operation and this operation manual. Please feel free to contact your distributor or Barber-Greene directly at any time.

Manufacturer's warranty void as to machinery, parts, or accessories subject to machine abuse.

With Barber-Greene's policy of constantly improving its products, specifications are subject to change without notice. Actual dimensions, clearances, weights, and other specifications may vary due to fabrication variables, options, or custom engineering.

https://tractormanualz.com

CAUTION AND WARNING DECALS

Barber-Greene has taken every precaution to minimize the hazards involved in operating this piece of machinery. Warning and caution decals are conspicuously positioned in areas where personal injury can most easily occur.

NOTE: IT IS EXTREMELY IMPORTANT THAT YOU OBSERVE THE RULES OF SAFETY AT ALL TIMES! FAILURE TO DO SO MAY RESULT IN PERSONAL INJURY.

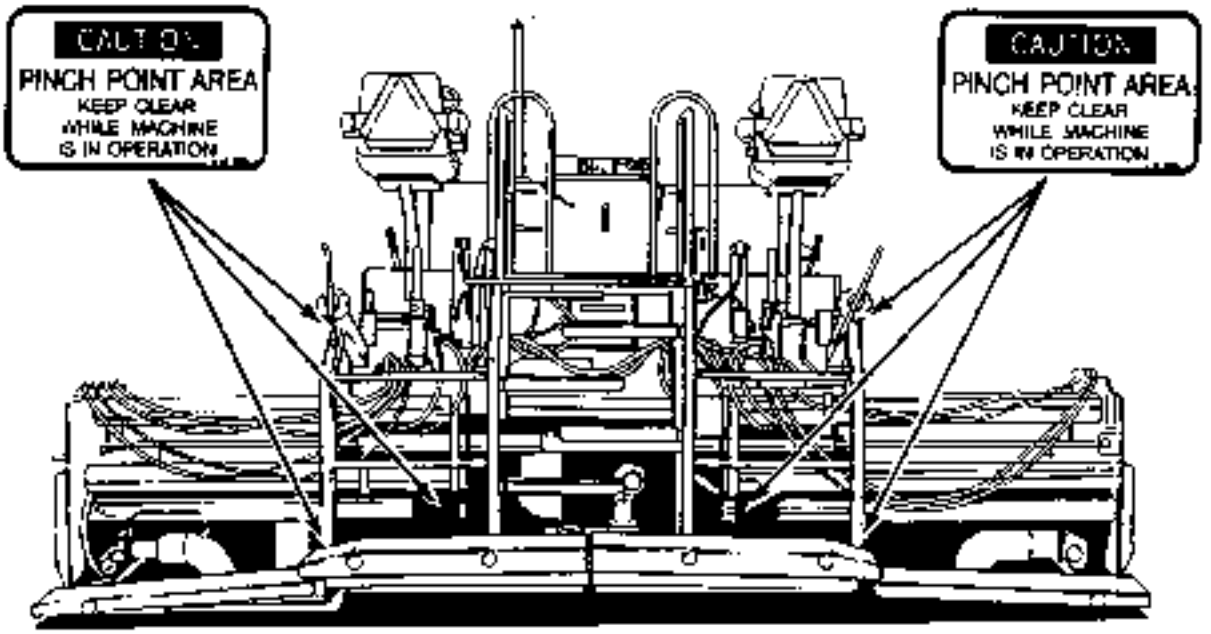

https://tractormanualz.com

EXTEND-A-MAT SCREEDS

All Barber-Greene Pavers use the self leveling principle to obtain a smooth riding surface. It has the ability to fill in low spots and scratch over the high spots to level out rough roads. The screed is free to float up and down independent of the tractor and only uses the tractor to tow it along and to meter material to it as needed. Two leveling arms, one on each side of the tractor, are used to tow the screed behind the tractor. The point where the leveling arms attach to the tractor is referred to as the tow point. The rearward ends of the arms are attached to the screed. This is called the pivot point because it allows the screed man to manually change the angle of the screed by means of the thickness control screws. This is called the angle of attack.

Four forces that effect mat thickness are:
A. Forward speed
B. Angle of attack
C. Head of material
D. Vibratory Effect
If any of these forces vary, it will effect the mat thickness, mat quality, and texture.

FORWARD SPEED (Refer to Figure 1)

Varing the forward motion without compensating for the other forces will change the mat thickness. Example; paving a mat two inches thick at 25 F.P.M. and increasing speed to 50 F.P.M., covering twice the distance, twice the amount of material should be used. The material cannot pass under the screed, so to compensate for this, the angle of attack will have to be increased to permit more material to pass under the screed to maintain the two inch mat thickness. A momentary change in speed will change mat texture and thickness.

ANGLE OF ATTACK (Refer to Figure 2)

The angle of attack is introduced into the screed with the thickness control screws or tow points when using automatics. The more angle that is introduced the thicker the mat will be. The less angle induced the thinner the mat will be. To obtain the best riding surface, the thickness control screws should never be changed once correct mat depth is reached. If the thickness control screws are adjusted without giving the paver time to react the resulting mat will be irregular.

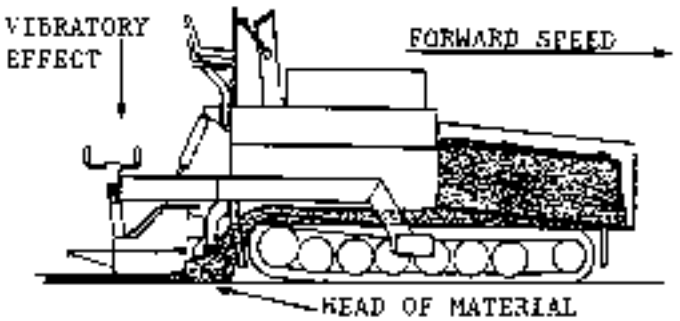

FIGURE 1

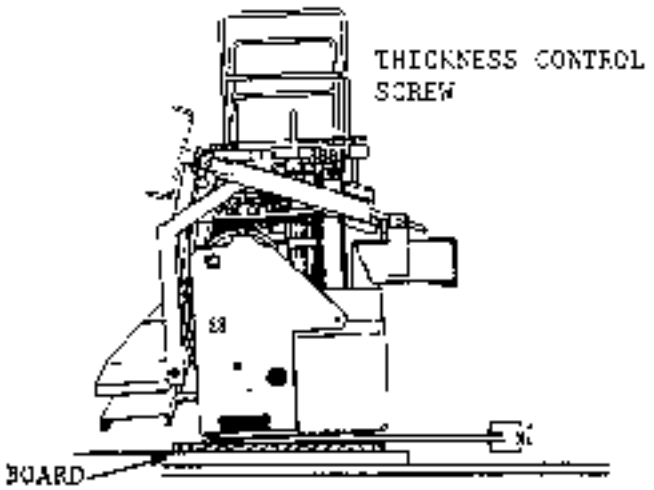

FIGURE -2 Angle Of Attack

https://tractormanualz.com

HEAD OF MATERIAL (Refer to Figure 1)

The head of material is the amount or mass of mix that is metered and pushed ahead of the screed.

Of all the forces the most important is the head of material. The mass of material ahead of the screed is exerting pressure in four directions. The head of material should remain constant in order to obtain a good riding surface.

The factors that control the head of material are the proper flow gate adjustment and the automatic feeder switches in conjunction with depth, width and paving speed.

LEVELING

The basic principle of the paver is: The screed when pulled into the material will automatically ride up or down to seek the level where the bottom or the road surface becomes parallel to the direction of the pull and continues parallel, laying a definite thickness until the screed alignment is changed.

By changing the thickness control the relation between the screed and leveling arm, the screed is tilted and rides to a new level.

Changing the level gradually, over a considerable distance, prevents sudden adjustment or steps that destroy the smooth riding surface. The importance of this characteristic will be seen as it produces a smooth surface when the base is uneven.

Assume the screed is adjusted for a given thickness of mat, and the tractor travels up to a higher level on the base.

The screed plate bottom is automatically tilted up.

When the paver encounters a depression, the reverse action takes place, as the tractor travels into the depression or to a lower level, the screed tilts down.

The Barber-Greene leveling feature depends upon time, or distance, instead of mechanical ratio. The tractor may change level, but it takes time before the screed has climbed to the new level. The tractor may be up and over the short bump, hole, etc, before the screed has had time to noticeably react, thereby leaving a level surface behind. Thus a mat laid and compacted on an irregular base with bumps and depressions automatically filled in, produces a smoother riding surface.

CONTROL OF SCREED (Refer to Figure 2A)

If the corner (Y), Figure 2A, of the screed is raised by control (W2) producing a slight warping in the whole screed surface, this will gradually come up and level out to the new setting, and the finished mat is thicker on one side as shown.

YIELD

When laying a level surface over an irregular base, where the thickness must necessarily be an average, it is physically impossible to hold to a minimum thickness on the high spots and not over-run the tonnage figured on the minimum thickness. Either the minimum thickness or minimum tonnage must be be sacrificed, otherwise the resurfaced area will be no smoother than the base on which it was laid.

The paver is designed to level automatically and when once set for proper thickness and left alone it will produce a much better surface than when manually controlled.

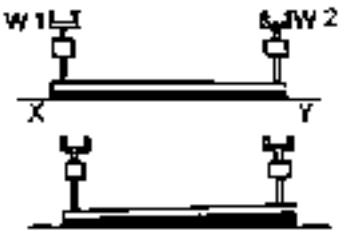

FIGURE -2A Control of Screed

https://tractormanuals.com

ADJUSTMENTS FOR EXTEND-A-MAT SCREED
MODEL-816 AND 1020

The Extend-A-Mat screed is extendable for an infinite number of paving widths, along with the capability of slope changes while paving.

CONTROLS

THICKNESS CONTROL SCREWS (Refer to Figure 3)
The thickness control screws are used to introduce the angle of attack into the screed. The adjustment of the thickness control screws and the start up procedures are discussed at the end of this section.

NOTE: Thickness control adjustment is more involved on the Extend-A-Mat screed please read the set-up instructions carefully at the end of this section before paving.

SLOPER CONTROL (Refer to Figure 4)
1. The slopers adjust slope down from 0 to 8 degrees.
2. Turn sloper control clockwise as you look at it to put in slope. Sloper moves down.
3. The slopers are easily adjusted while the paver is paving and does not change the paving width.

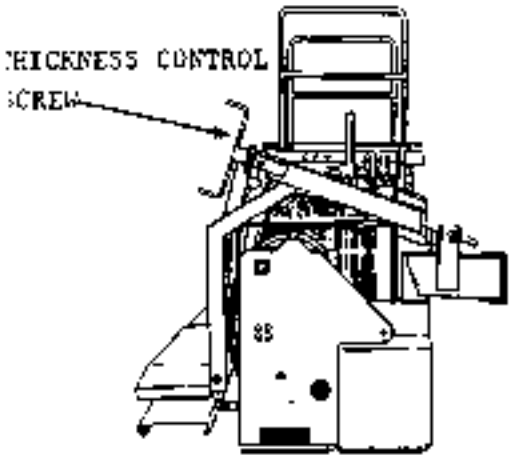

FIGURE-3 Extend-A-Mat Screed

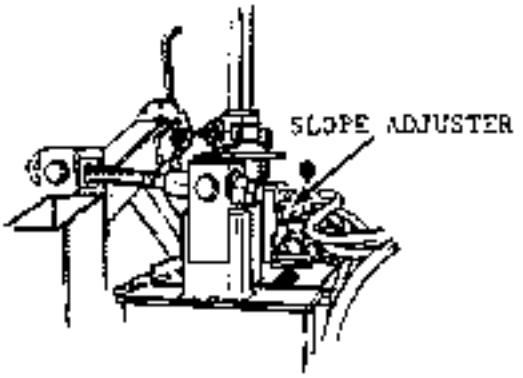

FIGURE-4 Sloper Control

HEIGHT ADJUSTER (Refer to Figure 5)
The height adjuster moves the trailing edge of the extender screed up or down to keep the screed plates patallel to the main screed when the attack angle is adjusted.

CROWN ADJUSTMENT (Refer to Figure 6)
The crown control adjusts the screed to produce the desired contour of the finished pavement. Turn control handle clockwise to increase crown to the desired setting. NOTE: NO leading edge crown is required for the Extend-A-Mat screed.

EXTENDER CONTROLS (Refer to Figure 7)
The extender control valves are located on either side of the screed and are hydraulic. Move the lever in to move the extension in, out to move the extension out. Optional electric operated valves and switches are also avaliable.

https://tractormanualz.com

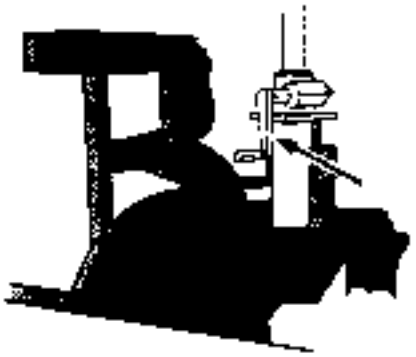

FIGURE-5 Height Adjuster

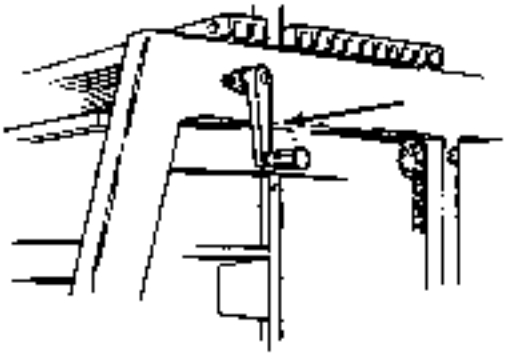

FIGURE-6 Crown Adjuster

FIGURE-7 Extender Control
(Left Side)

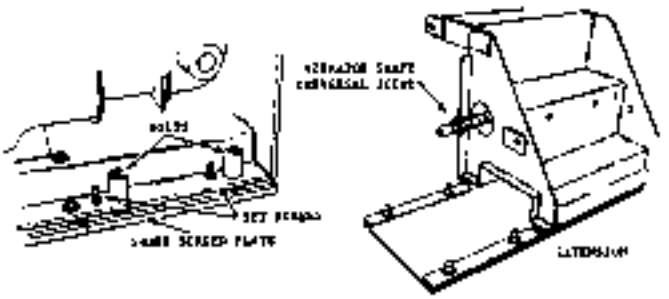

FIGURE-8 Screed Extensions

SCREED EXTENSIONS (Refer to Figure 8)

Extensions are available in 12" and 28" sizes. Maximum paving width on the 8' paver is 20' and maximum on the 10' paver is 24'.

INSTALLATION:

1. Remove end plates, support frames and deflectors.
2. Remove short screed plate (4 bolts) (Refer to Figure 8)
3. Install extensions with 4 bolts on bottom and two side bolts.
4. Snug bolts, check to see that extension plate and main screed are on the same plane.
5. Adjustment is made with the 4 set screws. Two on the leading and two on the trailing edge of the screed. (Refer to Figure 8)
6. Connect vibrator shaft universal joints. (2-ft. extensions only)

NOTE: The 1-ft. extensions have no heat and no vibration and the 2-ft. extensions have vibration and no heat.

7. Reinstall deflectors, support frames and end plates.

SCREW EXTENSIONS (Refer to Figure 9)

INSTALLATION:

1. Remove main screw shaft cover and install extension.
2. Install screw segments using bolts provided and torque to 70 ft.lbs.
3. Install shaft covers.

Screw extensions are needed only for the widest and deepest mats. Normally a maximum of 2 feet of screw extension is all that is ever needed.

MAIN FRAME EXTENSIONS (Refer to Figure 10)

INSTALLATION:

1. Bolt main frame extension to tractor main frame.
2. Install main frame brace (if required).
3. Move feeder switches outboard.

Main frame extensions are only needed for the widest and deepest mats. Normally a maximum of 2 feet of main frame extension is all that is ever needed.

https://tractormanualz.com

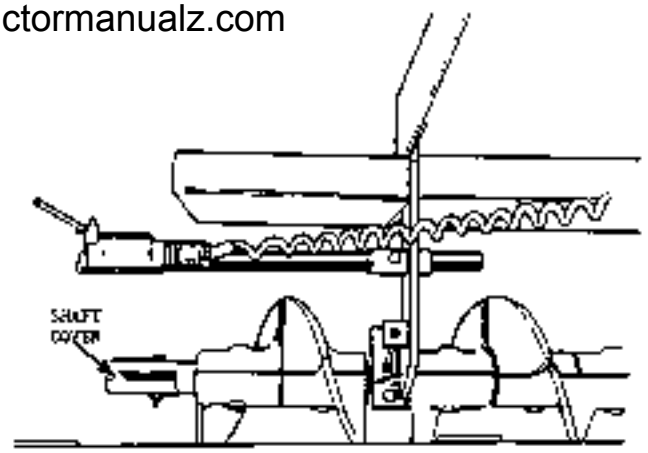

FIGURE 9 Screw Extensions

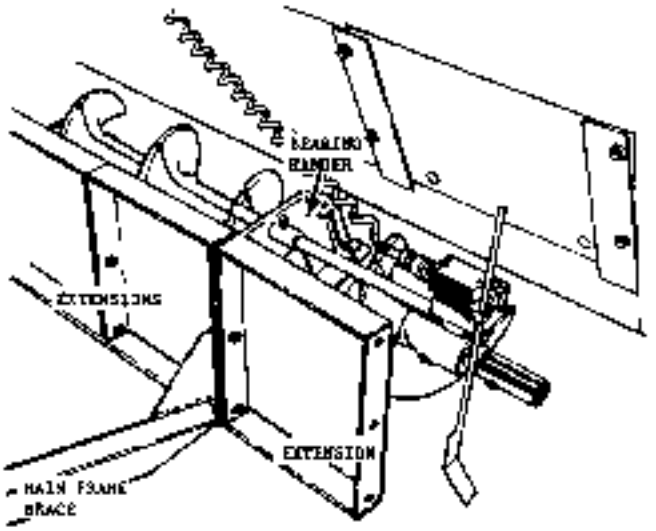

FIGURE-10 Main Frame Extensions

END PLATES (Refer to Figure 11)

End plates are provided for installation at each end of the spreading screws to hold material within the laying width of the paver and to form the edges of the mat being laid. End plates are standard equipment and always necessary except when bleeding out material to the side. The end plates, Figure 11, slide into the guide bar on the end plate main frame. The chains hook into the clips of the adjustment screws and permit adjustment.

CUT-OFF SHOES (OPTIONAL) (Refer to Figure 12)

The cut-off shoes are used to reduce the laying width between the end plates. There are two sizes, one giving a maximum of one foot reduction in width, in three inch increments, and one giving two foot reduction in three inch increments.

INSTALLATION:

1. Select proper shoe to obtain the width desired.
2. Raise the end plate, Figure 12, and lay the cut-off shoe projecting in toward the spreader screw for the desired amount of reduction.
3. Lower the end plate, Figure 12, onto the cut-off shoe.
4. Install the keeper pins in hole (A) and install bolts in hole (B). When cut-off shoes are used, it may be necessary to readjust the automatic feeder control paddles due to the reduction in width.

NOTE: When paving, do not force excessive material onto the cut-off shoes, this will increase the drag and place excessive strain on the end plate.

CAUTION: Before raising the screed for travel, unlock cut-off shoes from the end plates to prevent them from coming in contact with the screw conveyors.

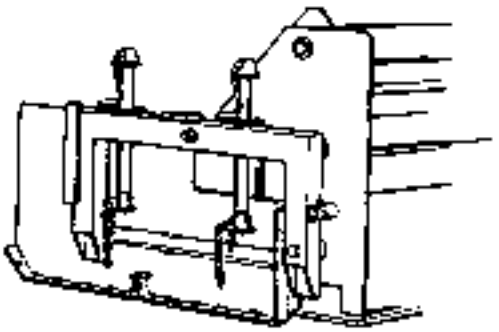

FIGURE-11 End Plate

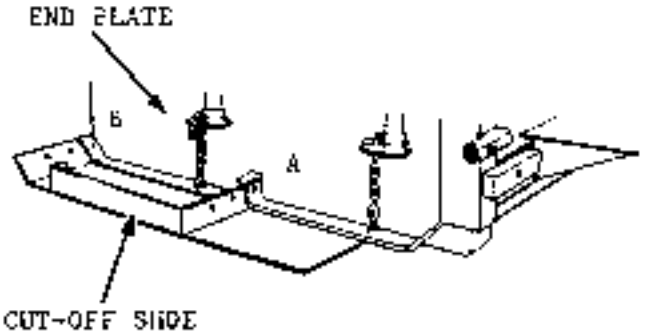

FIGURE-12 Cut-Off Shoes

https://tractormanuals.com

SCREED PLATES (Refer to Figure 13)

The Extend-A-Mat screed uses flat plates that are not reversible therefore they must be replaced when worn. The nosepiece will on the average last about two times longer than the screed plate.

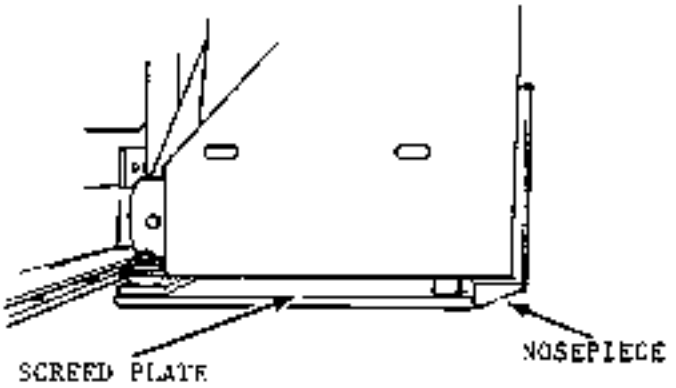

FIGURE-13 Screed Plates

BURNERS

Burners are provided for preheating the screed plates and other screed areas. If the screed is not preheated asphalt will stick to metal surfaces, causing skuffing of the mat.

Another way of preheating the screed is to lay it on the hot mix before paving.

LIGHTING BURNERS: (Refer to Figure 14)

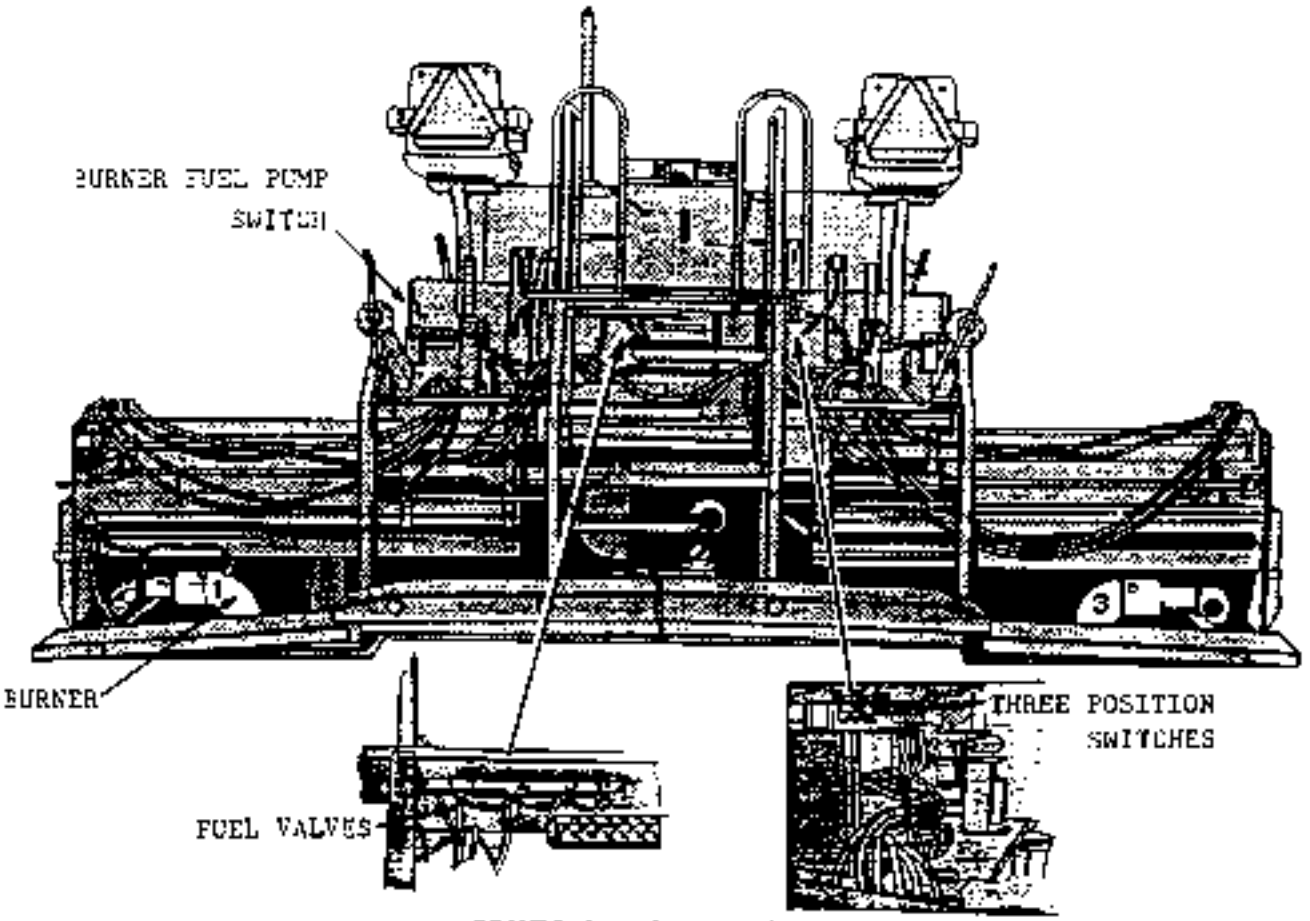

FIGURE-14 Burner Controls

https://tractormanualz.com
CAUTION: Before starting fuel pump check each burner shut off valve to make sure it is SHUT OFF.

1. Turn pump ON. Use the push/pull switch located on the left rear of the tractor. Pull out for the "ON" position.(Clockwise if equipped with rotary switch)
2. Select burner to be lighted. Turn the three position switch to the last position, glow plug , and hold for 25 sec. or until the plug element is a bright yellow.
3. Turn fuel valve to the "ON" position, toward rear of screed.
4. When burner ignites IMMEDIATELY let go of switch. The blower is (ON).

Use the above procedure to light the remaining burners. NOTE: Spring return switch turns blower on when released.

BURNER PRECAUTIONS:

1. Keep an eye on the burners at all times, especially for the first few minutes. The flame could blow out, which would result in the heated area being flooded with fuel and causing a fire hazard.
2. If the flame blows out. IMMEDIATELY close burner fuel valves. Leave blower run for several minutes before relighting.
3. DO NOT leave screed unattended while burners are on.
4. DO NOT overheat screed plates. Operating burners for long periods of time with screed not in contact with mix will cause plates to warp from overheating.

BURNER SHUTDOWN:

1. Close fuel valve(s). (Refer to Figure 14)
2. Shut off fuel pump, push/pull switch located on the upper left rear of the tractor, push in to the OFF position.(Clockwise if equipped with rotary switch)
3. Leave blower run for a couple of minutes, then shut off, counterclockwise is OFF.

SETTING THE SCREED UP FOR PAVING

1. When starting off blocks make sure they are long enough so that both front and rear screeds are sitting on the boards.
2. Raise the extenders above the front screed.
3. Zero out slopers.
4. Lower front screed onto blocks or existing mat.
5. Turn thickness controls to the null or "slack" position, with the screed FLAT on the blocks. Recheck the first control. The null position can be "felt" when turning the thickness controls with the screed resting on blocks. The controls will turn very easy with no drag for approximately 1/2 turn when the null position has been reached.
6. Turn thickness control screws so that the front edge of the screed is about 1/16 inches above the top of the blocks. As the screed slides off the blocks it will move onto partially compacted material of the same depth as the block thickness.(Refer to Figure 2 page 3)
7. To increase the depth, turn controls to the right or clockwise.
8. To decrease the depth, turn the controls to the left or counterclockwise.
9. A lock is provided to secure the position of the controls.
10. Check to see that the screed is flat on the blocks or mat after nulling out.
11. Lower extenders onto blocks or mat.
12. If slope is being used set degree of slope needed.

https://tractormanualz.com

LUBRICATION

Nothing can add to the life of the unit more than thorough lubrication of the moving parts, properly executed at the correct intervals. When time and the availability of the unit are at a premium, it is absolutely inexcusable to have a breakdown resulting from improper lubrication, since this can so easily be avoided.

LUBRICATING INSTRUCTIONS

Detailed instructions regarding the lubrication of the Extend-A-Mat Screed given in the lubrication chart and the lubrication drawing on the following pages. The lubrication chart specifies the points to be serviced, the hourly intervals, the type and quantity of lubricant to be used, and the specific instructions regarding the service to be performed. The lubrication drawing is used for identification and location of various points of lubrication and service.

LUBRICATE ONLY AS DIRECTED IN THE LUBRICATION CHART

The number of shots of grease from the grease gun is based on greasing with a standard 13oz. hand held gun delivering 1oz. of grease to 54 shots of the gun, using the recommended grease. One shot of the gun = 1/54oz. of grease.

Proper lubrication cuts down lost time and increases the life of the unit.

1. Keep grease guns clean, wipe each fitting with a clean cloth to prevent grit from being pumped into the bearing.

2. Keep grease and oil containers clean and their covers in place to keep dust and dirt from contaiminating the lubricants.

3. Keep lubricant containers well labeled, Be sure to use the correct lubricant for its specific purpose.

4. Study lubrication charts con't guess when lubricating this machine.

5. Remove all excess grease and oil which may accumulate during the days use.

https://tractormanualz.com

EXTEND-A-MAT MODELS 816 & 1020 SCREED LUBRICATION CHART

INTERV. HOURS	PT.	IDENTIFICATION	NO. OF POINTS	TYPE OF LUBE	QUAN.	REMARKS
50	26	Vibrator Shaft Bearings	8	HTG	2 Shots	
	27	Vibrator Slip Shaft & C-Joints	3	HTG	1 Shot	
	28	Height Adjuster	1 ea.	HTG	1 Shot	
	29	Crown Adjuster	2 ea.	HTG	1 Shot	
	30	Slopers	1 ea. Side	HTG	1 Shot	
	31	Thickness Control Screw	2 ea. Side	HTG	1 Shot	
1000 or Seasonal	32	Crown Adjustment Chain				Coat with used oil

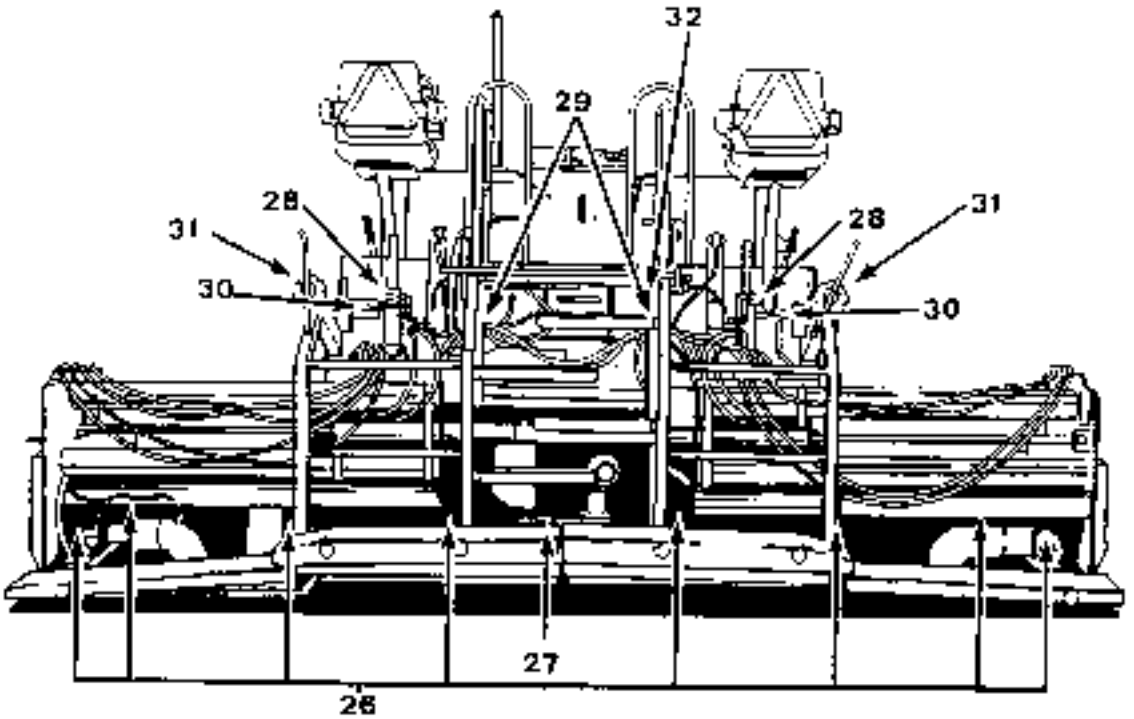

https://tractormanualz.com

https://tractormanualz.com

https://tractormanualz.com

© 1995 Caterpillar
All Rights Reserved

Printed in U.S.A.