# TRACTOR

# 85

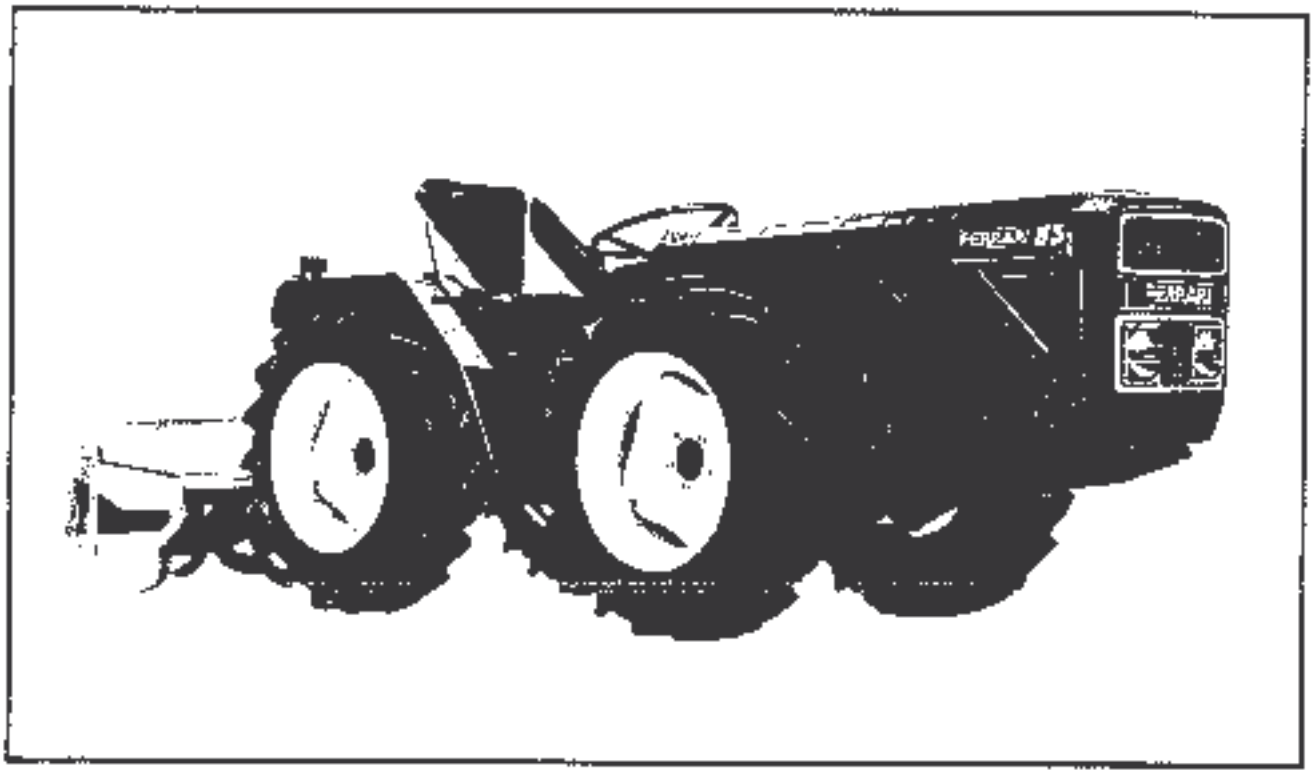


FERRARI

MACCHINE AGRICOLE

# INTRODUCTION

## IDENTIFICATION OF TRACTOR

The serial number of the machine is stamped on the right side of the gear box (fig. 1).
Always state the tractor serial number when placing any order for spare parts and asking for technical assistance.

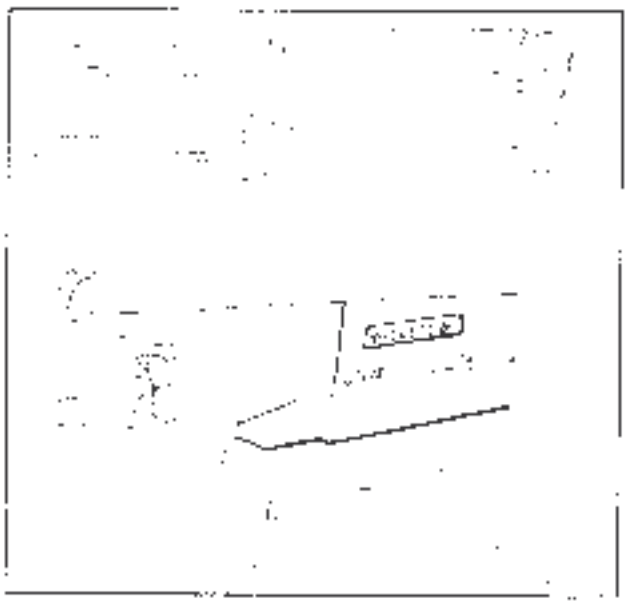

Figure 1 - Identification of tractor

## FOREWORD AND RECOMMENDATIONS

The following technical literature is delivered with each Ferrari tractor:

- OWNER'S MANUAL (operation and maintenance instructions)
- ENGINE HANDBOOK
- DIRECTIONS AND SUGGESTIONS FOR USERS OF FERRARI TRACTORS
- CERTIFICATE OF GUARANTEE

Reading the present manual for use and maintenance is essential to make full use of possibilities and performance of your Ferrari tractor.
As present manual refers to essential information only, it is strongly recommended for users going through handbook "DIRECTIONS AND SUGGESTIONS FOR USERS OF FERRARI TRACTORS".
You will find therein helpful suggestions for best efficiency and trouble-free operation be achieved.

## SPARE PARTS

It is strongly recommended that only ORIGINAL REPLACEMENT PARTS should be used. Orders must be made in accordance with the instructions contained in the Spare Parts Catalogue.
If a copy of the spare parts catalogue is not at hand, contact a Ferrari's Authorized Representative.

## TECHNICAL ASSISTANCE

FERRARI MACCHINE AGRICOLE place their Technical Assistance Service at Customer's disposal in order to solve any problem concerning use and maintenance of their machines.
CUSTOMERS may send their requests in writing to:


**O.M. FERRARI F. S.p.A.**
**Via Valbrina, 414**
**42045 LUZZARA (Reggio Emilia) - ITALIA**
**Tel. (0522) 835524 (5 linee)**
**Telex 530144 FERMAC**


The Makers reserve the right to modify the machine for any requirement of a commercial constructional character without obligation to update this publication promptly.

# CONTENTS

# TRACTOR DATA SHEET

## OVERALL DIMENSIONS OF THE TRACTOR

(See figure 2)

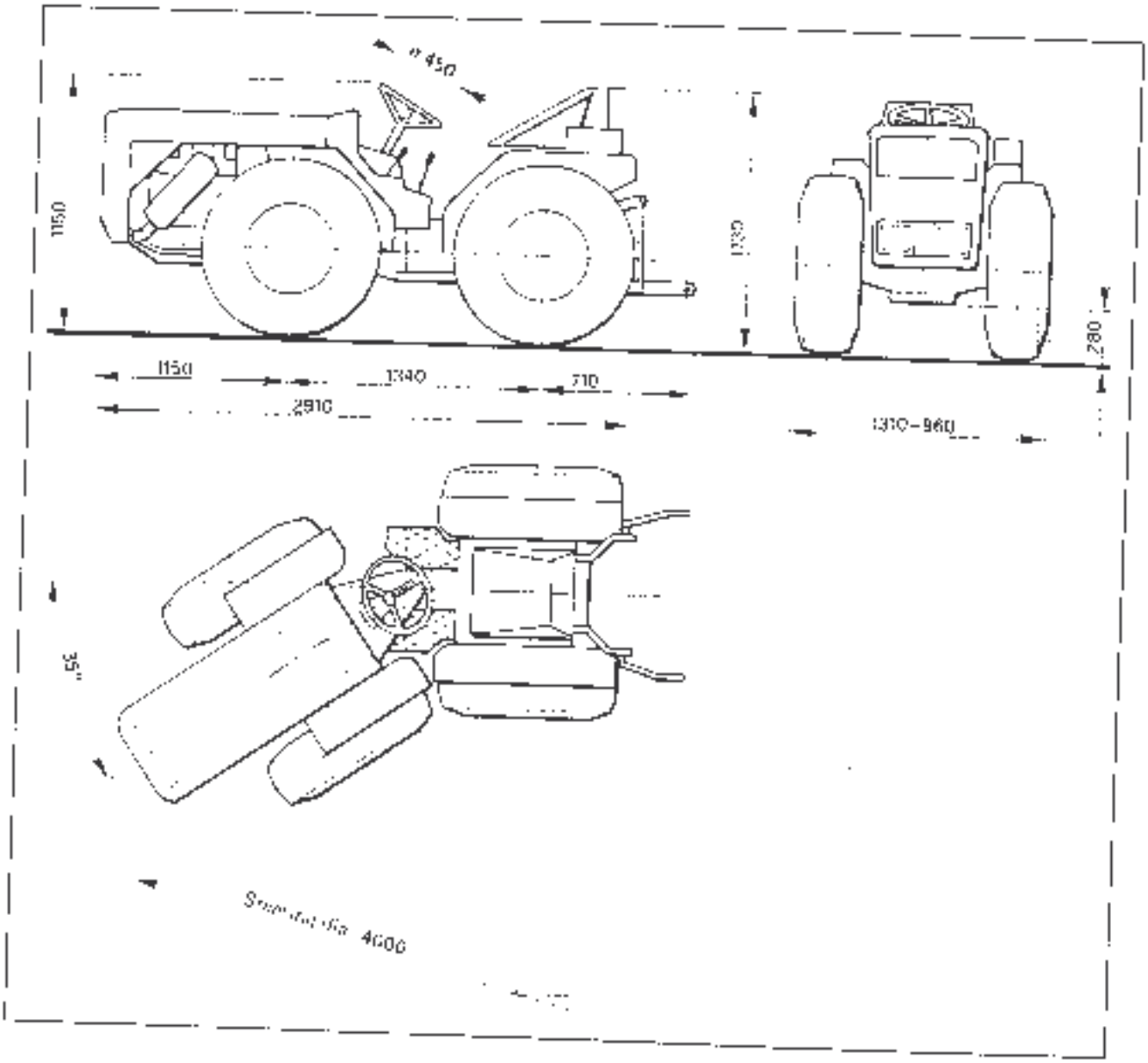


Figure 2 - Overall dimensions in mm

## ENGINE

The tractor is normally equipped with a Lombardini LDA 672 engine. Engine main specifications are the following:

Type: three cylinder, four stroke, air cooled Diesel engine.

Maximum rate: 3000 rpm

Maximum power: 45 HP

Upon request different types of engine are available.

## CLUTCH

Dry single plate clutch

Upon request, large diameter double clutch controlled through a single pedal to disengage the wheel drive from the power take off.

## SPEED SELECTION

Speed selection is allowed through a range selector (HIGH, LOW, REVERSE) and three speed gearing. The gear-box is provided also of the 7th speed used for road movement operations.

| TYRE SIZE | SPEED km/h | | | | | | | | | |
|---|---|---|---|---|---|---|---|---|---|---|
| | FORWARD | | | | | | | REVERSE | | |
| | LOW | | | HIGH | | | | | | |
| | 1 | 2 | 3 | 1 | 2 | 3 | 7 | 1 | 2 | 3 |
| 9.5-20 | 1,50 | 2,70 | 4,70 | 6,20 | 11,00 | 19,00 | 25,00 | 2,70 | 5,20 | 9,00 |

Note: with 7.50-18 tyres, the max. speeds decrease approx. 10%

## DRIVE AND STEERING

Drive on the front and rear wheels through locking differentials. Hydraulic steering with jack acting on the central joint.

## WHEELS AND TYRES

Front wheels: 9.5-20 tyres
Rear wheels: 9.5-20 tyres
Track variation is allowed on both axles
Tyres 7.50-18 are available on request.

| TYRE SIZE | TYPE | INFLATING PRESSURE |
|---|---|---|
| Front 9.5-20 | Tractor Agricolo 4 pr | 1.4 to 1.5 kg/sq.cm |
| Rear 9.5-20 | Tractor Agricolo 4 pr | 1.3 to 1.4 kg/sq.cm |
| Front 7.50-18 | Tractor Agricolo 4 pr | 1.2 to 1.3 kg/sq.cm |
| Rear 7.50-18 | Tractor Agricolo 4 pr | 1.1 to 1.2 kg/sq.cm |

## BRAKES

**Service brakes:** hydraulic type on front and rear wheels. A pedal controls the special servo-controlled pump for simultaneous braking of all wheels.

**Parking and emergency brakes:** hand-lever controlled, mechanical design, acting on rear wheels.

## ELECTRIC EQUIPMENT

Rated voltage 12 Volt
Battery capacity 90 Amph (two 45 Amph batteries are provided).
Batteries are recharged through alternator and voltage regulator.
Lighting system and horn are tested and approved for road circulation.

## HYDRAULIC LIFTER

Independent hydraulic circuit.
Pump directly coupled to engine. Control valve ensuring an automatic adjustment of work depth and effort.
Hydraulic jack for lifting, 2 or 3 point lift connection.
Allowable load at arms: 1000 kg approx.

## POWER TAKE-OFF

The tractor is normally equipped with two rear power take-off:

- An upper power take-off providing two-speed range independent from tractor speed, a clutch makes it possible the synchronized rotation with all gears of its speed range.
- An lower power take-off providing two-speed range independent from the tractor (speed range is the same as the upper power take-off).

The two power take-off are standardized coupling ASAE 1" 3/8). Dimensions are quoted in fig. 3
Rotation is clockwise.

| UPPER AND LOWER TAKE-OFF SPEED | | |
|---|---|---|
| POSITION OF CONTROL LEVER | ENGINE RPM | |
| | 2.400 | 3.000 |
| I | 540 | 670 |
| II | 750 | 940 |

## TOWING HOOK

Adjustable in two positions. Class "B" approved for road circulation.
Dimensions are shown in fig. 3

## TRACTOR WEIGHT

Weight of the tractor in running order is 1300 kg
Allowed ballast: 200 kg.

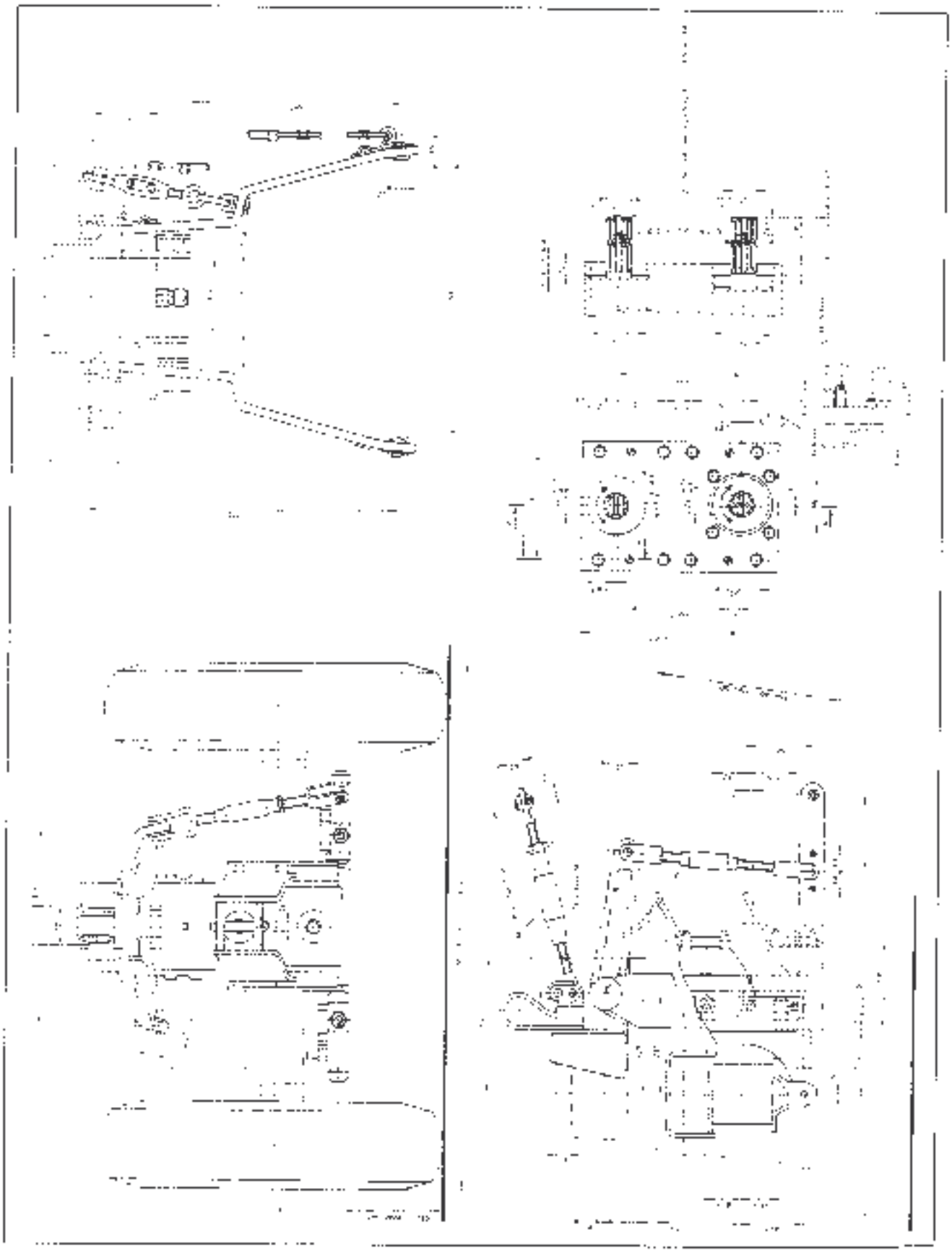

Figure 3 Dimensions of power take-off and towing hook

# SERVICING

## TYRE INFLATION

| | |
|---|---|
| 1 FRONT WHEELS | Tyres type Tractor Agricola 4pr. 9.5 20 inflating pressure 1.4 to 1.5 kg/sq.cm |
| 2 REAR WHEELS | Tyres type Tractor Agricola 4 pr. 9.5 20 inflating pressure 1.3 to 1.4 kg/sq.cm |

## FILLING

| | |
|---|---|
| 1 FUEL TANK | Capacity 16 liters<br>Use Diesel fuel (decanted fuel if possible) |
| 2 ENGINE AND AIR FILTER | For lubricant types and capacity see engine handbook |
| 3 GEAR BOX | Capacity 1.5 kg<br>Use BP Energol GR-XP 220 (ISO), or oil AGIP F1 ROTRA HYPOID SAE 90 |
| 4 REAR AXLE HOUSING | Capacity 10 kg<br>Use BP Energol GR-XP 220 (ISO) oil, or AGIP F1 ROTRA HYPOID SAE 90 |
| 5 HYDRALLIC SYSTEM | Capacity 7 kg<br>Use BP Energol HL 68 oil or AGIP OSO 55 oil |
| 6. TILLER HOUSING | Capacity 1.5 kg<br>Use BP Energol GR XP 220 (ISO) oil, or AGIP F1 ROTRA HYPOID SAE 90 |
| 7. BRAKING SYSTEM RESERVOIR | Capacity 0.250 kg<br>Use BP DISC BRAKE FLUID oil or AGIP BRAKE FLUID oil |

# CONTROLS AND INSTRUMENTS OF TRACTOR

## CONTROLS AND INDICATORS ON DASHBOARD

(See Figure 4).

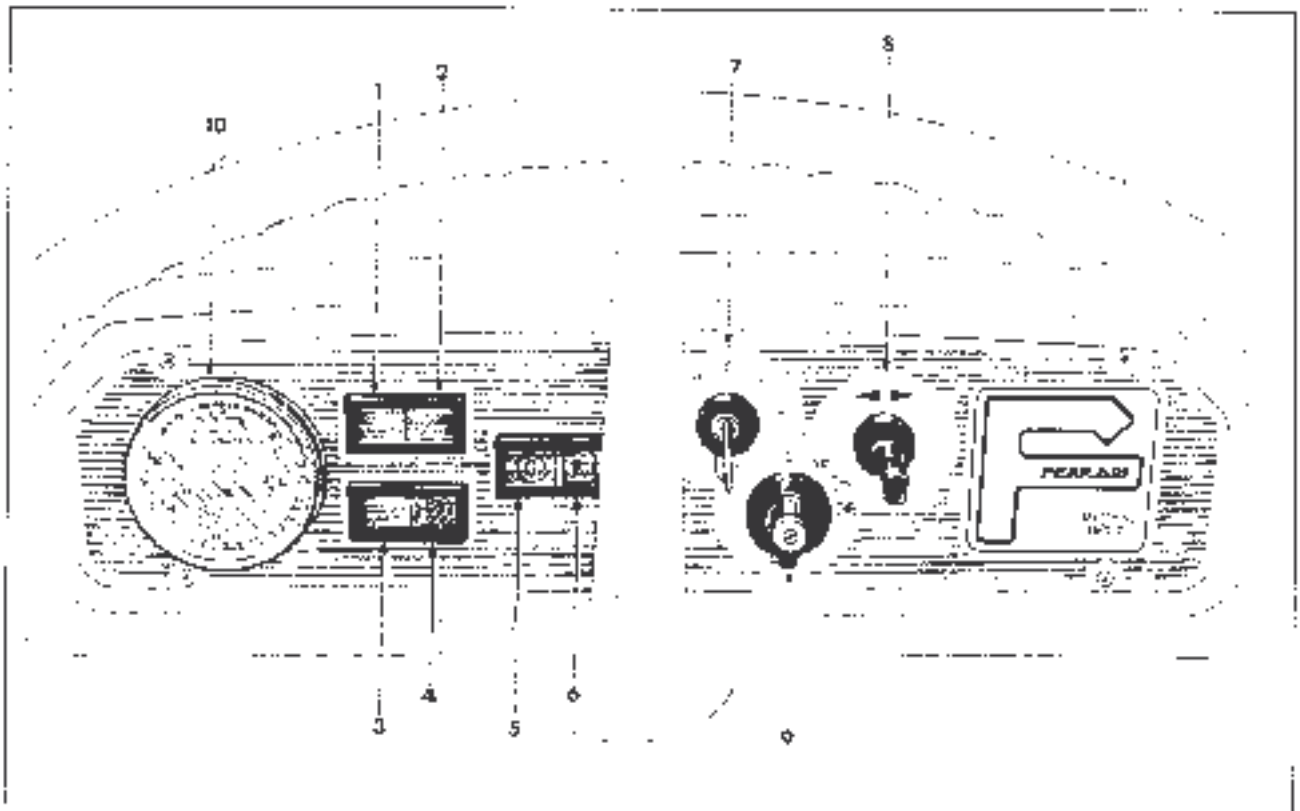


1. Signal of directional lights on (GREEN)
2. Signal of directional lights for trailers (GREEN)
3. Signal of headlights fully on (BLUE)
4. Signal of fuel reserve in use (RED)
5. Signal of poor feed for battery recharge (RED) (optional)
6. Signal of low oil pressure to engine (RED)
7. Key-switch

   F. Lights circuit live
   G. No circuit live
   1. All circuits live
   2. Engine starting

8. Switch for directional lights and flashers
9. Switch for lights and horn
10. Multiple revolution-counter and hour-meter (3-scale instrument)
    - Outer scale reads engine rpm
    - Intermediate red scale reads power take-off rpm in 2nd speed. Whatever the equipment used, it is recommended to keep constantly at about 750 rpm (red reference notch)
    - Inside red scale reads power take-off rpm in 1st speed. Whatever the equipment used it is recommended to keep constantly at about 550 rpm (red reference notch).
    - The four-digit hour-meter reads the actual hours of engine operation.

Figure 4 - Controls and indicators on dashboard

## CONTROLS FOR DRIVE AND WORK OPERATIONS

(See fig. 5)

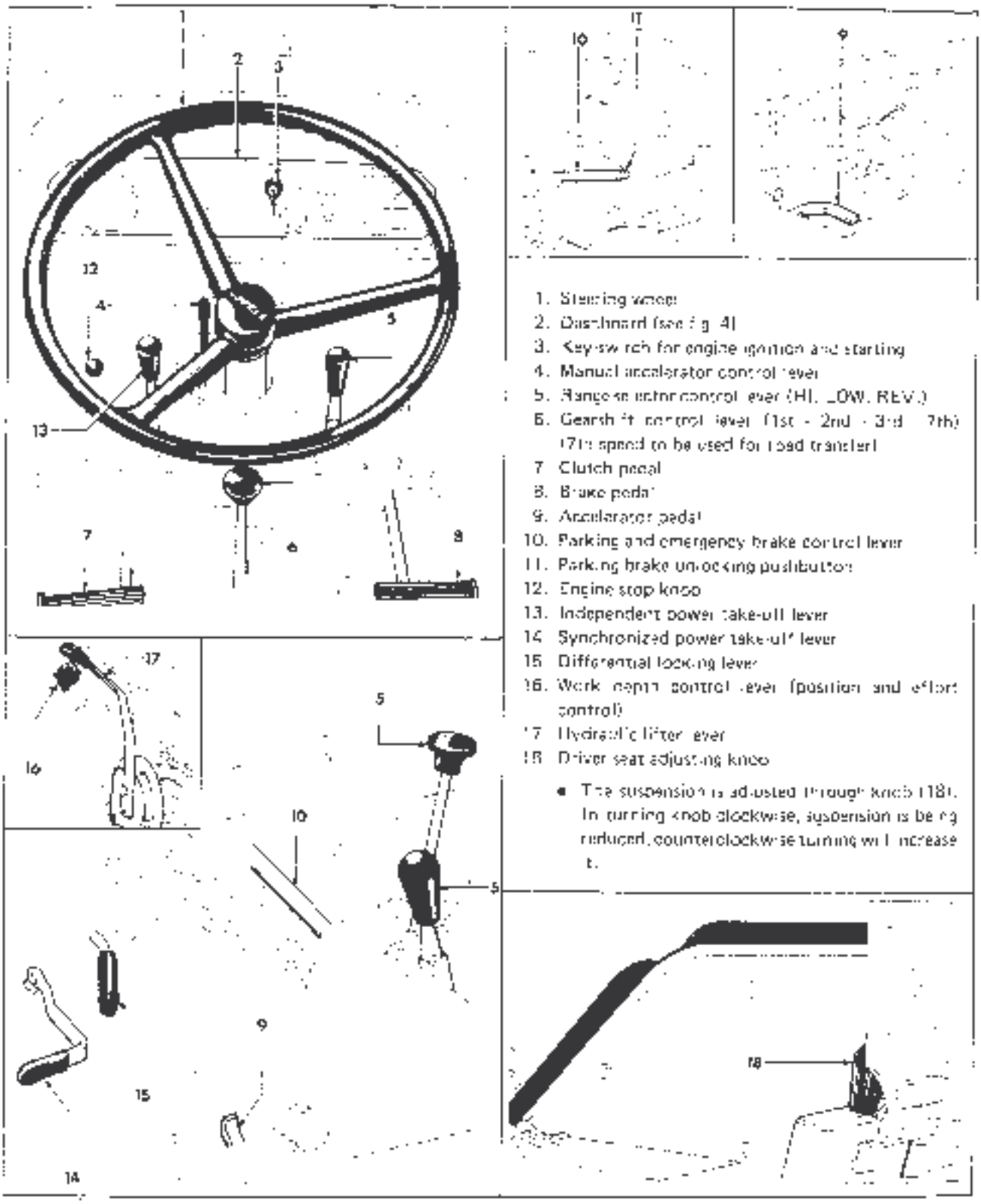


Figure 5 - Controls for drive and work operations

# USE OF TRACTOR

## RUNNING-IN

During the running-in period (first 80 hours of operation) special care should be taken (consult the handbook "Directions and Suggestions for Users" for detailed information).

During and upon completion of running-in the operations described under Fig. 6 are to be carried out.

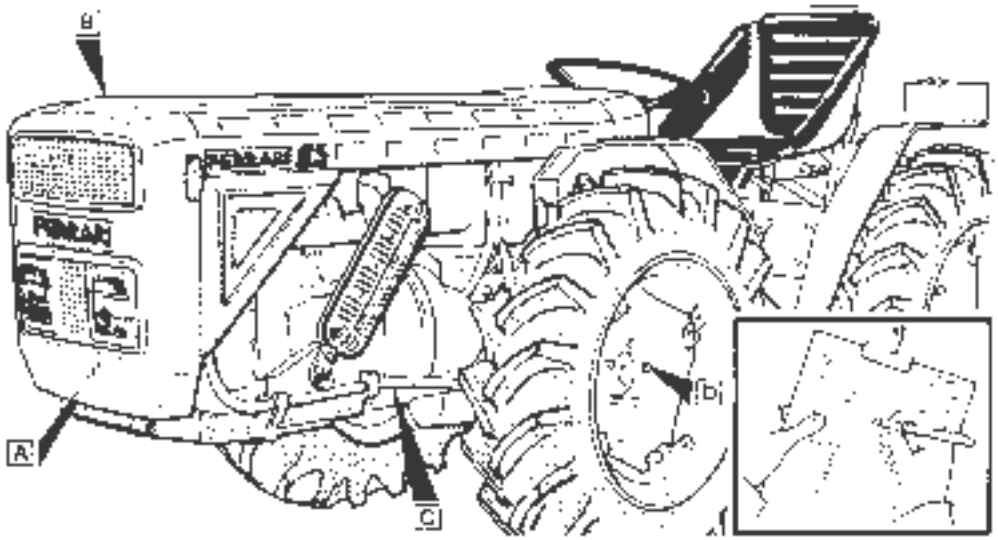


**A ENGINE**

After 20 hours: change oil
After 50 hours: clean and set fuel injectors
* During the first 80 hours: avoid heavy-duty and extended work.

**B AIR FILTER**

After 20 hours: clean the filter element
After 80 hours: change oil

**C HYDRAULIC SYSTEM**

During the first 80 hours: inspect frequently, if required take action for adjustment as prescribed (see page 301).

After 80 hours: change oil (BP FAFRGOL – 100 or AGIP OSO 55)

**D MAIN UNITS**

During the first 80 hours: inspect all main units (engine, gear box, drive system, attachments, control linkage, etc.) for security of attachment frequently.

* For detailed instructions consult "Directions and Suggestions for Users"

Figure 6 – Instructions for running-in

## STARTING OF ENGINE

- For additional information about engine operation, refer to the appropriate instruction booklet (owner's manual).
- For normal starting, proceed as follows (see figure 7):

1. Make sure that the engine stop knob is fully pushed in.
2. Make sure that all control levers (2) are in NEUTRAL position.
3. Bring accelerator control lever (3) to half-way position.
4. Insert key in switch (4) and turn it to position "2".
5. When motor is started, release key which will revert direct to position "1".

### Note

In case of failure to start, wait a few seconds prior to doing the starting sequence again, not to cause battery running down.

Consult the engine handbook for additional information.

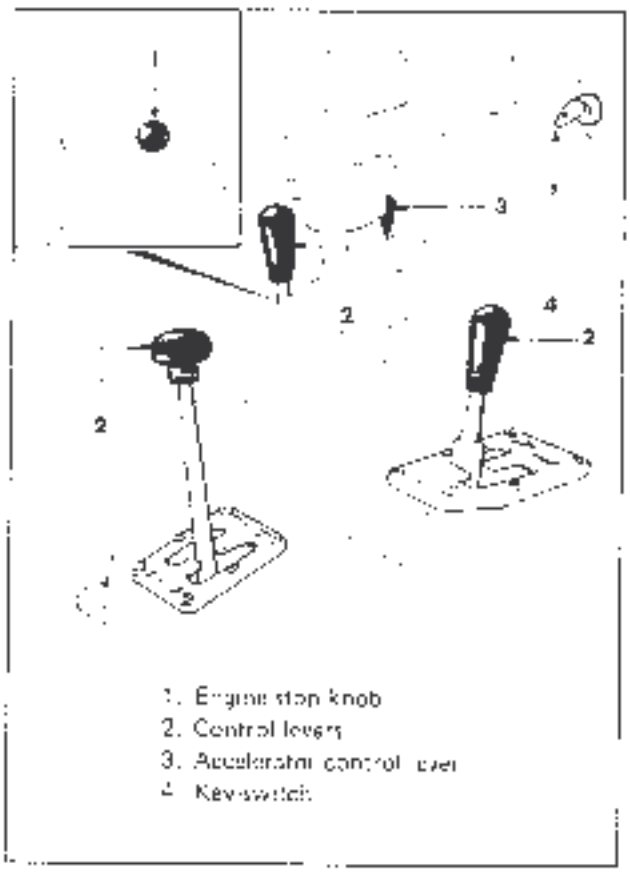


Figure 7. Controls for starting the engine

## STOPPING THE ENGINE

1. Bring all control levers to NEUTRAL position.
2. Before turning off the engine, let it run for a few minutes at low RPM to make cooling easier (this is most advisable after a long running).
3. Pull engine stop knob (Fig. 7, detail 1).

**WARNING**

Do not try stopping the engine by bringing switch key to position "0" because the engine would keep on running. Some operation of engine with power off may adversely affect the battery.

4. Remove key from switch.
5. After the engine stops, fully push the stop knob (1), otherwise the engine will not start next time.

## USE OF TRACTOR

### OPERATION SEQUENCE

1. Press clutch pedal (fig. 8, detail 1).

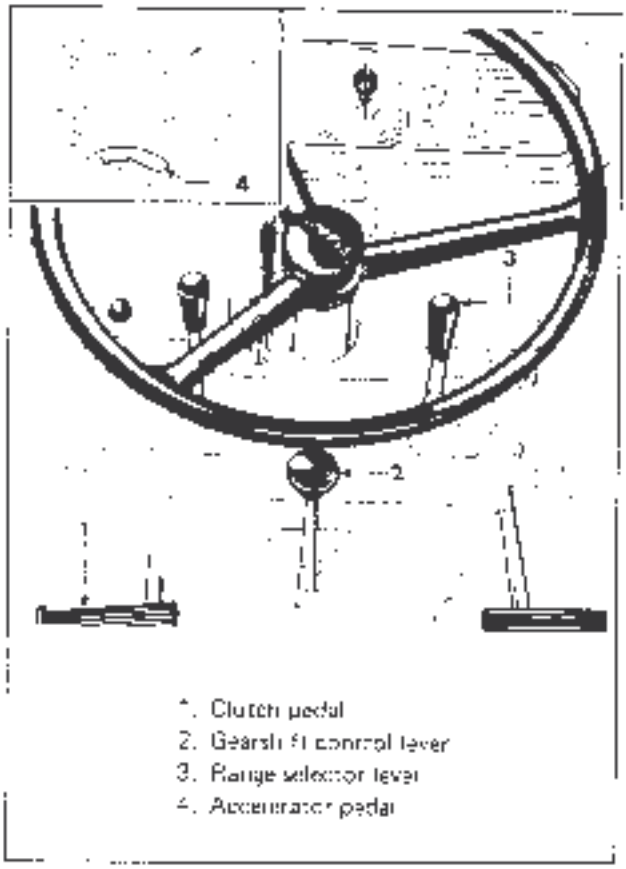


Figure 8. Operation sequence

2. Select the desired speed range (Low, H., Reverse) through lever (3).
3. Select the desired speed gear (1st, 2nd or 3rd) through lever (2).
4. Gradually release the clutch lever.
5. Regulate the position of the accelerator hand lever so that the engine runs evenly and without exhaust smoke.
6. For all subsequent operations and manoeuvers, use the accelerator pedal only.

**WARNING**

- In the event any resistance be encountered when engaging the desired gear or selector particularly during running in, always depress

the clutch pedal over and over again. DO NOT FORCE LEVERS AND ALWAYS MAKE USE OF CLUTCH.

- The selector control lever is to be engaged WHEN TRACTOR IS AT STOP only.

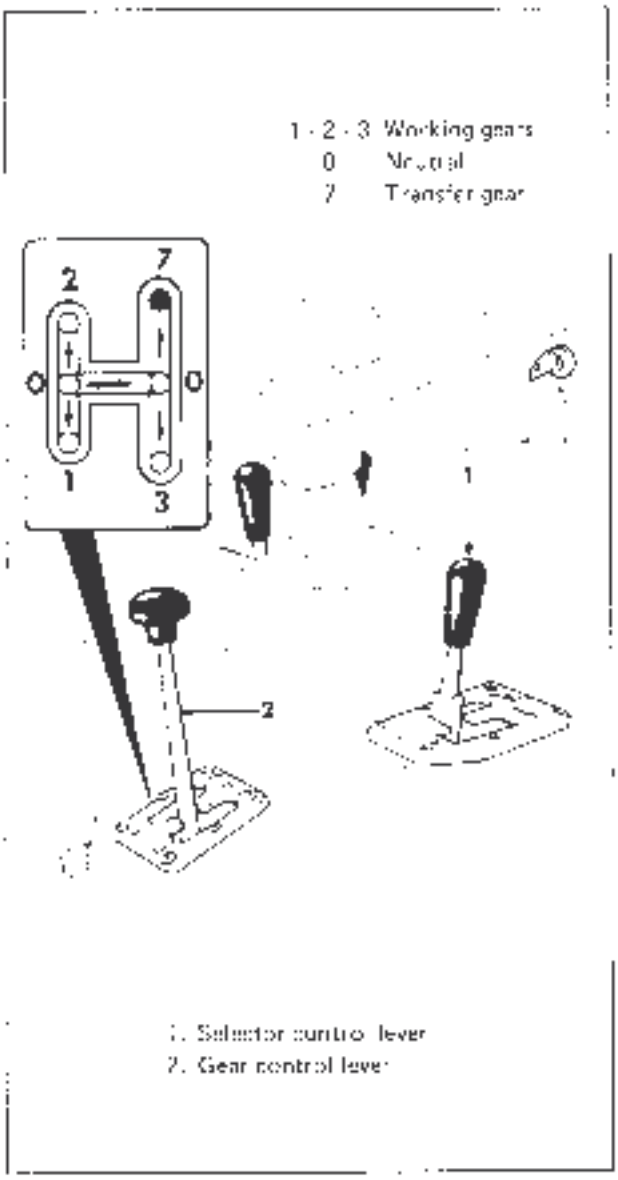


Figure 9. Use of 7th speed

USE OF 7th SPEED (See figure 9)

Whatever the speed previously engaged in the range selector (Hi, LOW REVI, it is bypassed by engagement of the lever in the 7th gearbox position. This position makes the tractor proceed forward only at maximum speed and hence is used for fast road movement operations.

**WARNING**

If the gearshift lever is brought back from the 7th speed to any other gearbox speed, the range selector automatically comes into operation again.

Therefore for example, shifting from the 7th speed to the 3rd speed, if the range selector was in the reverse position, the tractor will switch from a speed of about 25 km/h forward to a speed of about 9 km/h in reverse.

Thus before shifting from 7th speed to others, it is ESSENTIAL TO CHECK THE SPEED ENGAGED IN THE RANGE SELECTOR BY OBSERVING THE POSITION OF THE POINTER. It is recommended as well to keep the range selector lever in the "NEUTRAL" position when shifting to 7th speed.

The manufacturer is not responsible for any damage caused to operator, tractor or third parties due to improper use of the range selector and gearshift levers.

## POWER TAKE-OFF

The tractor is equipped with two power take-off (see fig. 10)

- Lower power take-off providing two independent speeds for operating miscellaneous implements.
- Upper power take-off providing two independent speeds as the lower shaft speed rates and additional provisions for synchronization of speeds with the entire gearshift range.

All specifications relating to power take-off (dimensions rotation speed etc.) are stated under "TRACTOR DATA SHEET" and fig. 3.

## SYNCHRONIZATION OF UPPER POWER TAKE-OFF

The synchronized power take-off is driven by the bevel pinion of the rear axle when the relating control lever is engaged (Fig. 10, detail 3).

When tractor is at stop, power take-off does not rotate, switching from forward movement to reverse, rotation direction of the power take-off is reversed as well.

Whatever the speed engaged, synchronized power take-off performs 0.250 revolutions per revolution of the wheels.

The synchronized power take-off essential scope is towing driving-wheel trailers. The trailer tyre sizes and reduction ratios must be selected on the basis of the number of revolutions made by the power take-off.

### POWER TAKE-OFF SYNCHRONIZER CONTROL LEVER

The control lever is located on right hand side of the rear axle box (see fig. 10).
Control lever to be actuated as follows:

1. Depress clutch pedal.
2. To have power take-off engaged, push lever (1) DOWN.
3. To have it released, pull lever (1) UP.

## IMPLEMENTS POWER TAKE-OFF

(EITHER UPPER OR LOWER)

### OPERATING SEQUENCE

1. Depress clutch pedal.
2. Engage power take-off in the desired speed by bringing the proper lever (Fig. 10) to position I (Low speed) or to II (High speed).

**CAUTION**

Make sure the control lever is properly engaged.

3. Gradually release clutch pedal.

## FRONT AND REAR DIFFERENTIALS LOCKING LEVER

The proper control lever to be actuated as follows (see fig. 11):

1. For LOCKING the differentials, stop tractor and pull control lever (1) UP beyond the detent (2).
2. TO UNLOCK the differentials, release the control lever (1) from the detent (2) and take it DOWN.

**WARNING**

- When engaging the differentials locking lever, slightly steer the tractor to right hand and left hand to make locking engagement easier.

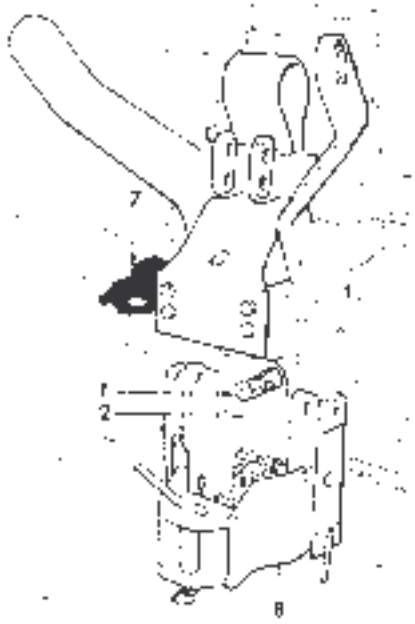


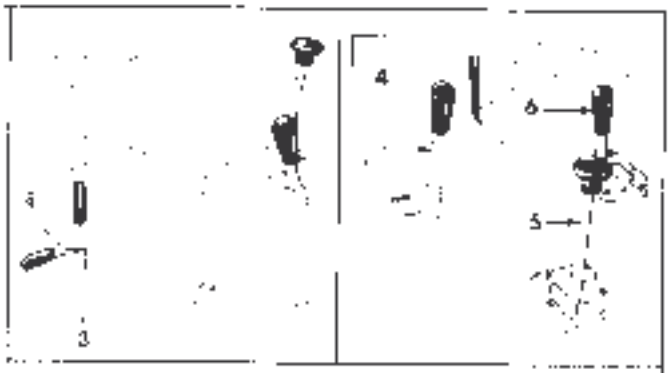


1. Upper power take-off (independent or synchronized)
2. Guard for power take-off (to be put on either power take-off when not in use)
3. Synchronized power take-off control lever
4. Independent power take-off control lever
5. Gear shift lever
6. Range selector lever
7. Electrical connector for trailer
8. Towing-hook

Figure 10. Power take-off and controls

- DO NOT ENGAGE differentials locking when tractor is under stress.
- TO DISENGAGE locking, depress clutch pedal to unload the wheels thereby allowing the locking sleeves to disengage.
- Do not go round bends with the differential locked.
- Do not keep the differential locked when unnecessary.

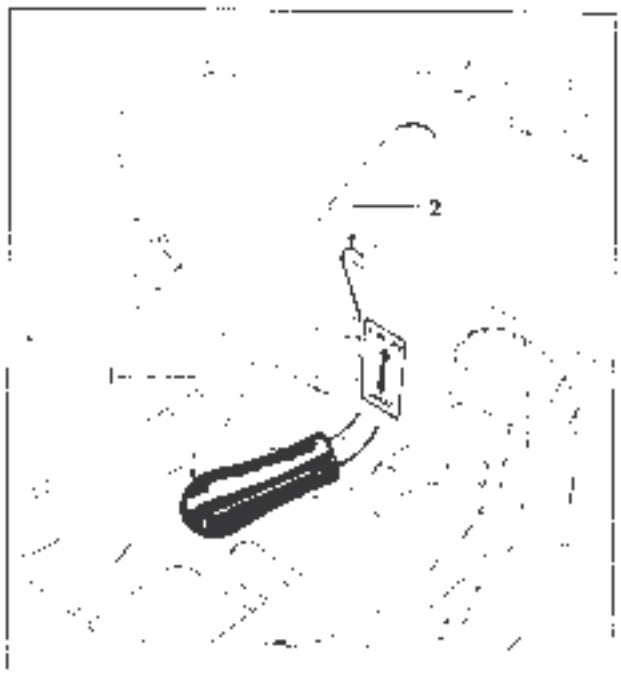


1. Differential locking control lever.
2. Upper arrow (lever in "LOCKED" position).

Figure 11. Locking of differentials

## HYDRAULIC IMPLEMENT LIFTER

The hydraulic lifters mounted on "FERRARI 85" tractors may be used as described hereinafter.

1. "Stationary" position.
2. Floating operation.
3. Controlled position and effort.

### HYDRAULIC LIFTER LEVER

The control lever acts as follows (see Fig. 12):

1. LEVER UP: the implement holder raises.
2. LEVER DOWN: the implement holder lowers.
3. LEVER FULLY DOWN: the implement holder gets "floating".

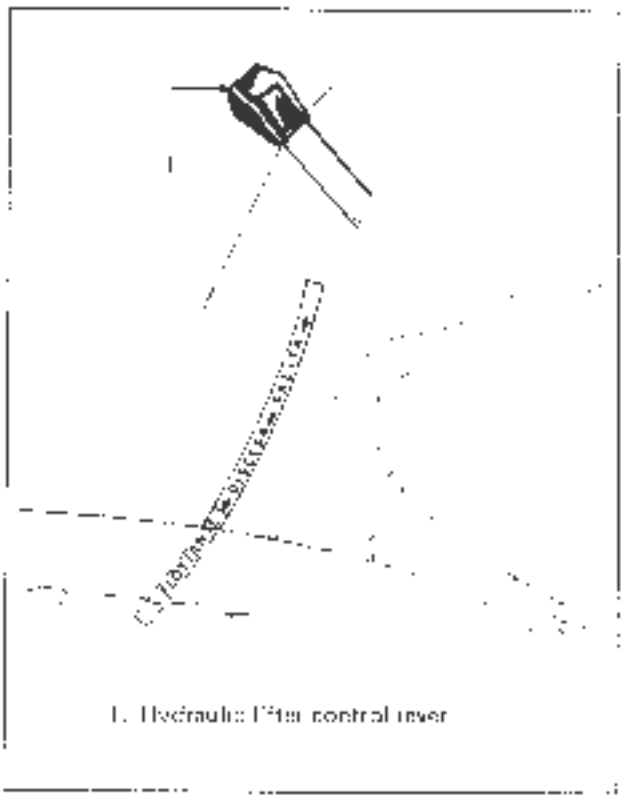


1. Hydraulic lifter control lever

Figure 12. Control system of implement holder hydraulic lifter

### "STATIONARY" OR "FLOATING" POSITION

**Note**

Make sure the controlled effort lever (fig. 13, item 1) is disengaged (position 10 of graduated scale).

### "STATIONARY" USE

"Stationary" position makes it possible to lead and hold the implement in any position inside or outside the ground according to the position selected with the lifter lever (fig. 12, item 1). Implement movement depends upon lever motion.

## "FLOATING" USE

"Floating" use releases completely the lifter arms, motion of which gets free. In this instance the lifter is used only to lower the implement at the beginning of each stroke and, during work, the implement follows the ground surface.

## CONTROLLED EFFORT LEVER

The controlled effort lever makes it possible adjusting the hydraulic lifter sensitivity as follows (see fig. 13):

1. LEVER AHEAD (to number "10" of graduated scale): the implement acts with full power and is less sensitive when resistance is encountered.

2. LEVER BACK (to number "0" of graduated scale): the implement gets more sensitive and tends to raise when resistance is encountered.

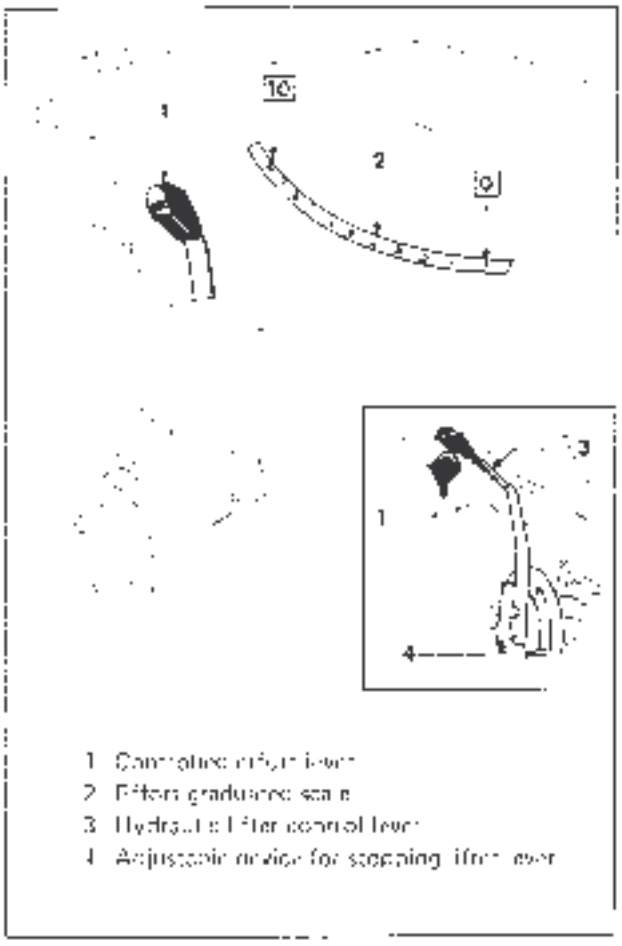


1. Controlled effort lever
2. Lifter graduated scale
3. Hydraulic lifter control lever
4. Adjustable device for stopping lifter lever

Figure 13 - Use of the controlled effort hydraulic lifter

### Note

The controlled effort lever can be used only in conjunction with the 3 point hitch.

## APPLICATION OF CONTROLLED EFFORT

The controlled effort provision is particularly designed for all carried implements (viz no wheel and no bearing geared units) which should work in even deep soil
work in even deep soil.
With an appropriate setting of the effort control lever, the implement height varies according to the resistance offered by the soil. The tractor runs more smoothly and the speed is almost constant.
Operate the controls as follows (see fig. 13).

1. Lower the implement by gradually bringing the lifter control lever to "DOWN" position.
2. Keep actuating the lever until the implement gets steady in required depth.

   Lock the lever stop (4) to bring it to same position in starting any stroke.
3. Adjust the lifter sensitivity actuating lever (1) as shown in figure 13.

## CONNECTION FOR IMPLEMENTS

The tractor is equipped with a two or three point hitch. Consult booklet "DIRECTIONS AND SUGGESTIONS FOR USERS" for instructions concerning connection provisions.

## CONNECTION OF A TILLER
(see fig. 11)

Connect the tiller joint (1) to the tractor implement holder by means of pins (2). Connect the tiller arms (3) to joint (1) by means of the appropriate pins (4). Connect tiller attachments to lifter arm (5) through the appropriate tie-bars (6). Adjust the position of the implement with the adjustment nuts (7). The working depth of tiller is controlled according to requirements by moving the side slides of tiller. This is done removing screw (8) and placing it into another hole. Make same adjustment on both sides of the tiller.
Connect universal joint (9) to the power take-off shaft. Depress the safety button (10) and make sure the joint goes beyond the catch. Then insert the clutch end of universal shaft provided with a safety button (10) onto the tiller shaft and bring the universal shaft (tractor side) back to catch position.

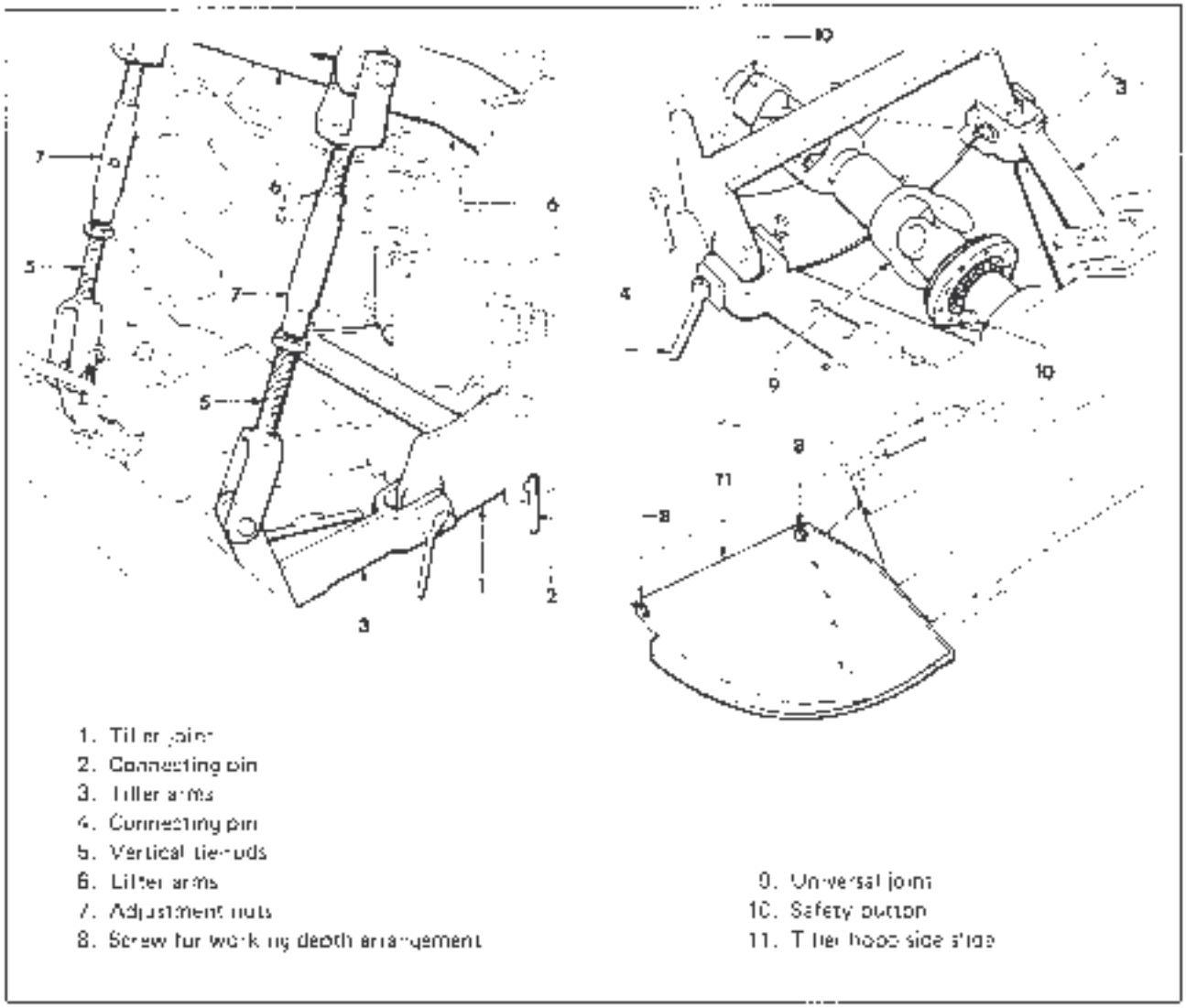


Figure 14 Tiller connection

## PLOUGH CONNECTION

(see fig. 16)

1. Connect arms (1) to tractor flanges located in the lower portion of rear hubs and fasten through appropriate pins.
2. Connect stiffening tie-bars (2) to arms (1) and flanges located on the axle shaft supports of rear wheels.
3. Connect sprag (3) to tractor implement holder through appropriate pins (4)
4. Connect plough to arms (1) and sprag (3) locking it through pins (5).
5. Connect plough to lifter arms through vertical tie bars (6).
6. Adjust the length of the two lifting tie-bars so that plough lifting is limited to a strictly essential level only.

## CONNECTION FOR DRIVING WHEEL TRAILERS

1. Connect the trailer universal joint to the synchronized power take-off shaft (upper shaft).
2. Engage the parking brake lever of trailer into the corresponding socket.
3. Connect the tractor electrical system to the trailer through a 7-pole connector (fig. 15, item 12)
4. Engage the synchronized power take-off control lever as described and shown (see fig. 10).
5. If the trailer is a dump body model provided with hydraulic hoist, arrange connection of tractor hydraulic system to trailer body equipment through the appropriate quick hydraulic intake (fig. 10, item 5) fitted on the tractor (optional).

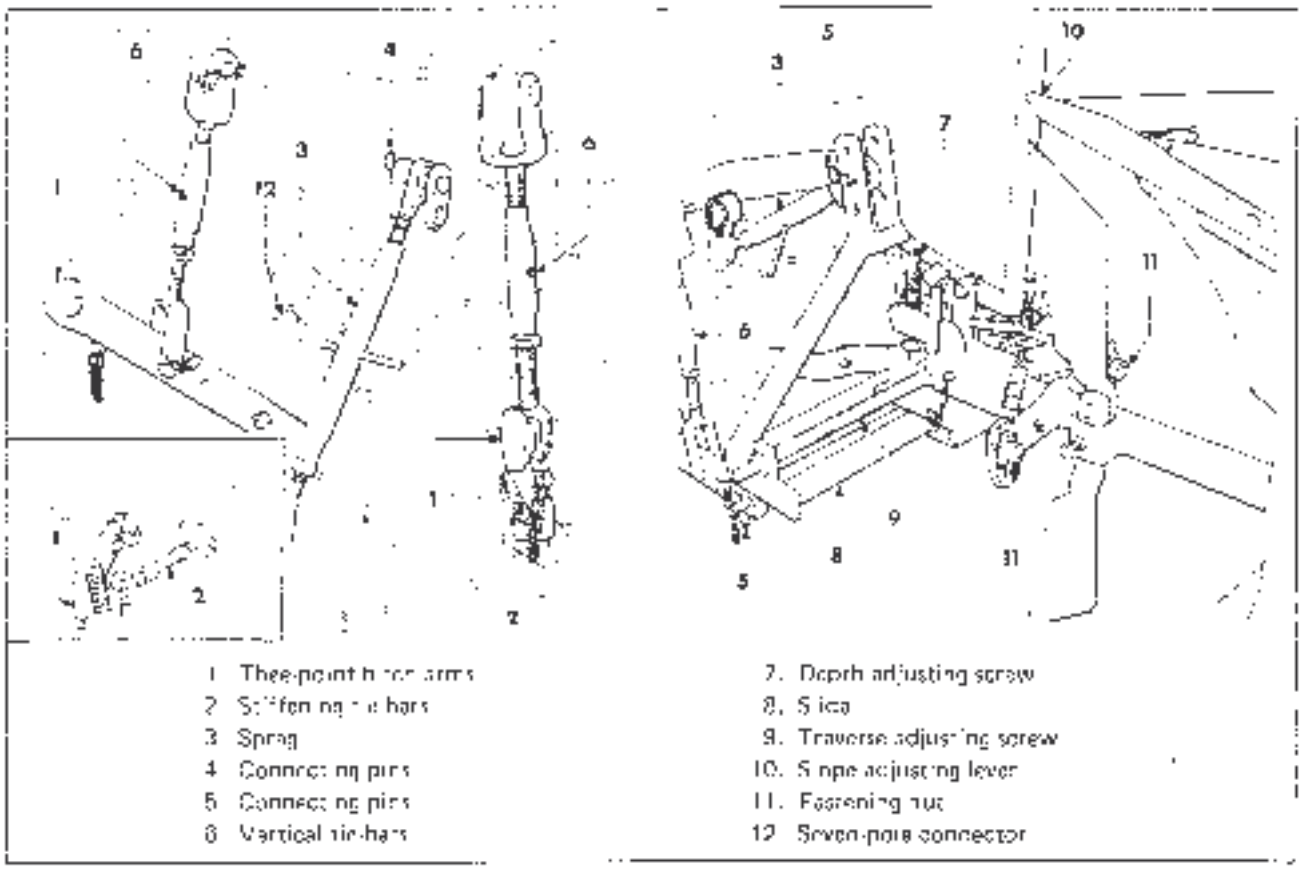


Figure 15. Plough connection

## LIFTING OF TRAILER BODY

For body lifting follow procedure outlined (see fig. 16)

1. Actuate the hydraulic lifter control lever until arms (2) are fully raised.

2. Make sure the controlled effort lever (3) is in "0" position of the graduated scale.

3. Lift the dump body of trailer by pushing FORWARD lever (4) of the control valve.

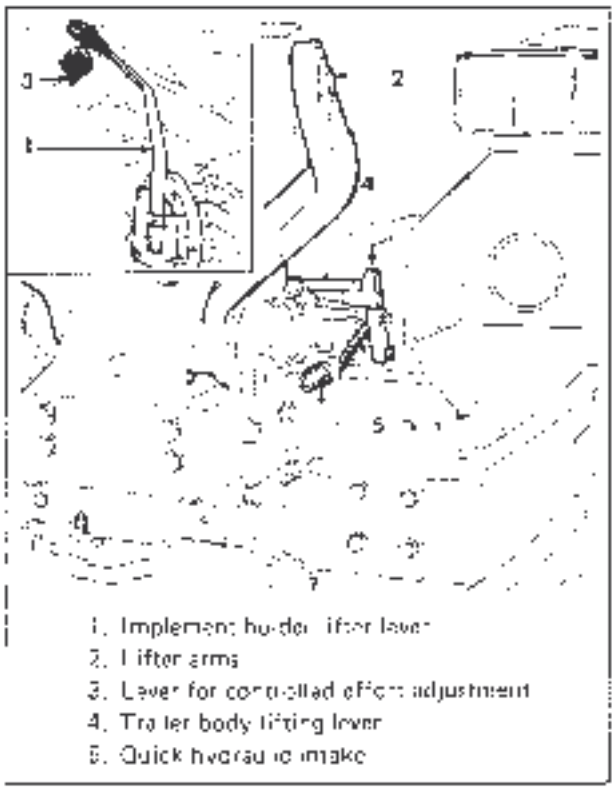


Figure 16. Hydraulic lifting of trailer body

## TOWING HOOK

The tractor is provided with a road towing hook. See fig. 3 for basic dimensions.
The towing hook can be located either under or above the power take off location shown in fig. 16.

## TRACK VARIATION

### GENERAL

To meet the working requirements of the various implements and cultivations, all tractor models provide track variation.

### ADJUSTMENT OF FRONT AND REAR TRACKS

The discs of rear and front wheels are adjustable. Position of wheels and relating tracks appears in fig. 17.

To dismantle wheels and discs, lift the tractor rear or front portion by means of a jack placed beneath the tractor body.

#### Note

In arranging for adjustment of front and rear tracks, make sure the tyre lugs be positioned in the forward movement rotation direction (shown by an arrow on tyre side).
Front and rear wheels should be constantly symmetrical about the tractor longitudinal axis.

SECTION VIEW OF FRONT AND REAR WHEELS

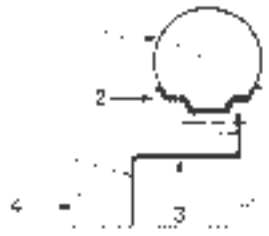


1. Tyre
2. Rim
3. Adjustable disc
4. Wheel hub

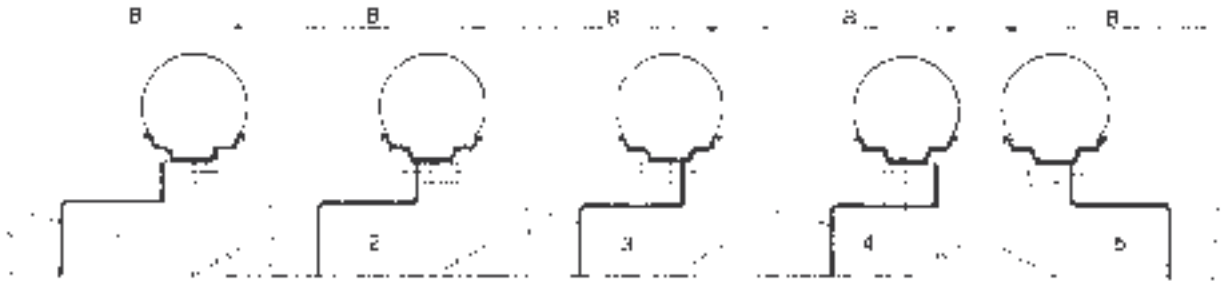


| POSITION | | 1 | 2 | 3 | 4 | 5 |
|---|---|---|---|---|---|---|
| Tyre 9.5-20 | D | 1300 mm | 1170 mm | 1185 mm | | 1050 mm |
| Tyre 7.50-18 | B | 1310 mm | 1140 mm | 1130 mm | 950 mm | – |

Figure 17 - Variation of front and rear tracks

# MAINTENANCE

## LUBRICATION AND INSPECTIONS

Make prescribed operations as listed hereinafter at the intervals stated ("hours" are intended to be the actual working hours of the machine).
Lubricants to be used are quoted in table "SERVICING INSTRUCTIONS" at the beginning of present manual.

### EVERY 8 HOURS (DAILY)

ENGINE: check oil level (when required, top it up).

AIR FILTER: under exceptional dusty conditions the filtering element should be cleaned. Procedure to be as follows.

- release clips or collar (1) and remove cup (2),
- clean the filtering element (3) by means of gasoline or solvent. If the filtering screen is clogged or damaged, replacement will be necessary,
- clear cup (2) with gasoline and fill it with clean oil (same oil as for engine) up to level (4),
- where a "cyclon" filter is installed, clean precleaner with gasoline or solvent.

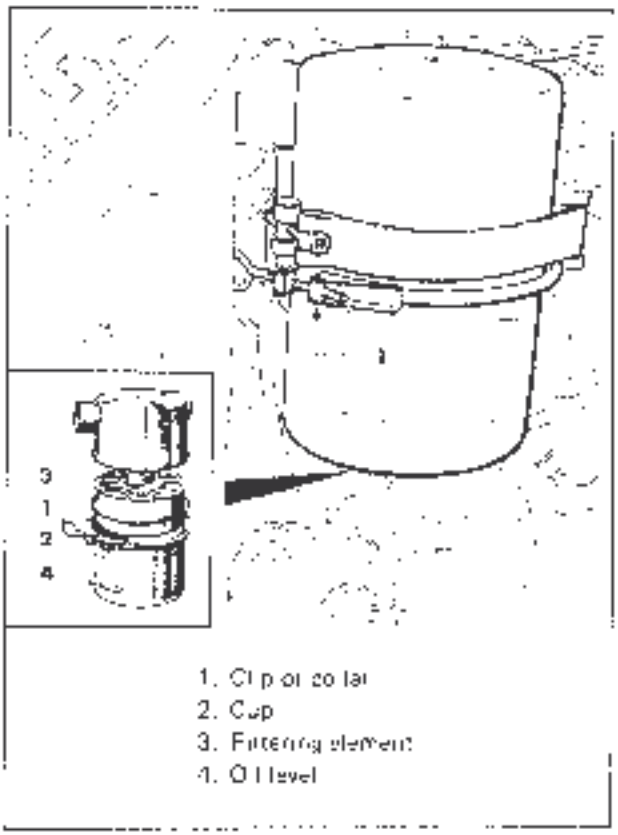


1. Clip or collar
2. Cup
3. Filtering element
4. Oil level

Figure 18. Engine air filter

### POINTS TO BE GREASED (EVERY 25 HOURS)

CENTER PLATE: grease 1 point

STEERING JACK JOINT: grease 2 points

HYDRAULIC LIFTER ARMS: grease 2 points

UNIVERSAL JOINTS: grease 4 points

PIVOTS OF GEARSHIFT LEVER, SELECTOR LEVER, POWER TAKE-OFF LEVER: grease 3 points

PIVOTS OF BRAKE AND CLUTCH CONTROL PEDALS: grease 2 points.

### EVERY 60 HOURS (MAXIMUM INTERVAL)

AIR FILTER: cartridge should be cleaned in complying with the foregoing and oil be changed. Intervals for cleaning depend upon ambient conditions. However never exceed 60 hours.

### EVERY 100 HOURS

ENGINE: change oil.
HYDRAULIC SYSTEM RESERVOIR: check the level. With implement holder and steering control jacks fully drawn back, oil level should be at approx. 20 mm from reservoir edge (see fig. 19).

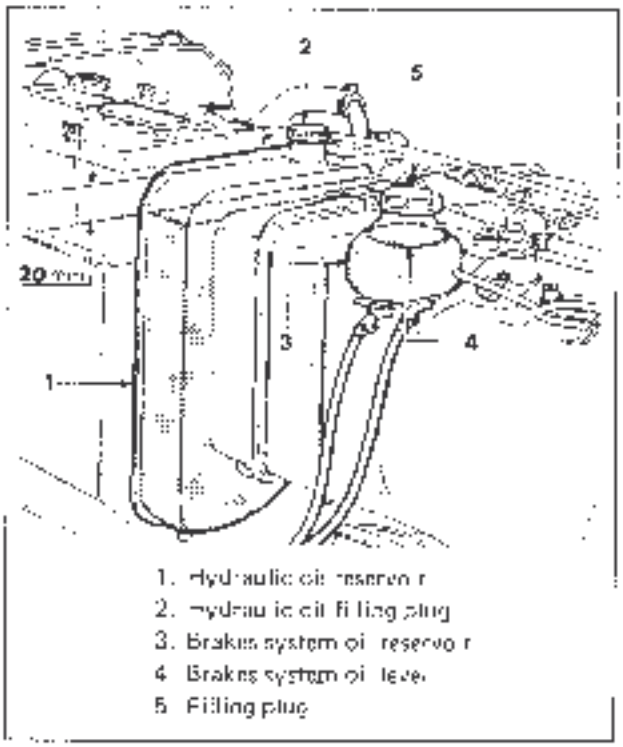


1. Hydraulic oil reservoir
2. Hydraulic oil filling plug
3. Brakes system oil reservoir
4. Brakes system oil level
5. Filling plug

Figure 19. Oil level of hydraulic system and brake system reservoirs

GEARBOX: check oil level (see fig. 20).
REAR AXLE BOX: check oil level (see fig. 21).
BRAKES SYSTEM RESERVOIR: check oil level (see fig. 19).


1. Oil level peep hole

Figure 20. Oil level of gearbox

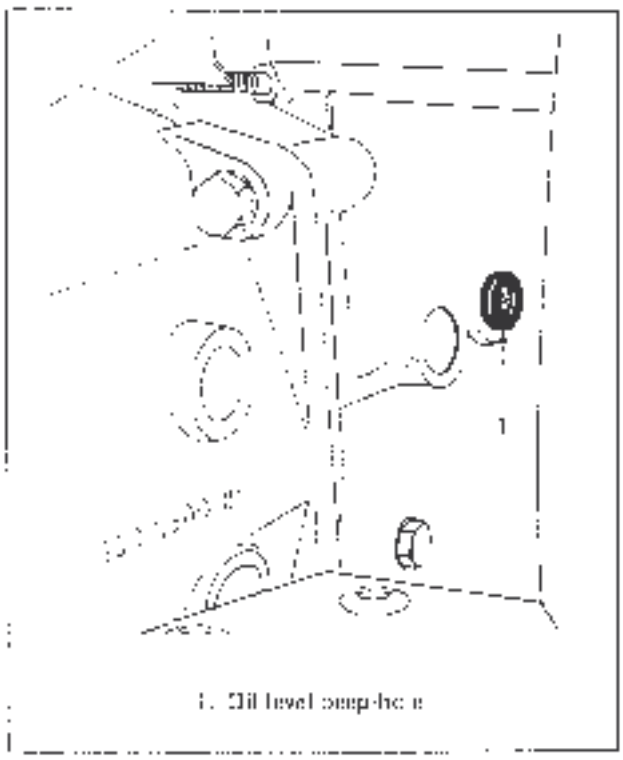


1. Oil level peep-hole

Figure 21. Oil level of rear axle box

## EVERY 200 HOURS

FUEL SYSTEM: clean the filtering element, in following procedure outlined (see fig. 22).

- drain the outlet tube fitting;
- unloose bolt (1), remove cup (2) and filtering cartridge (3);
- clean filtering element (3) with gasoline or solvent and replace it if screen is found to be clogged or damaged;
- clean cup (2) with gasoline or Diesel fuel;
- reassemble filtering element (3) in making sure seal (4) be in order and accurately located in groove.

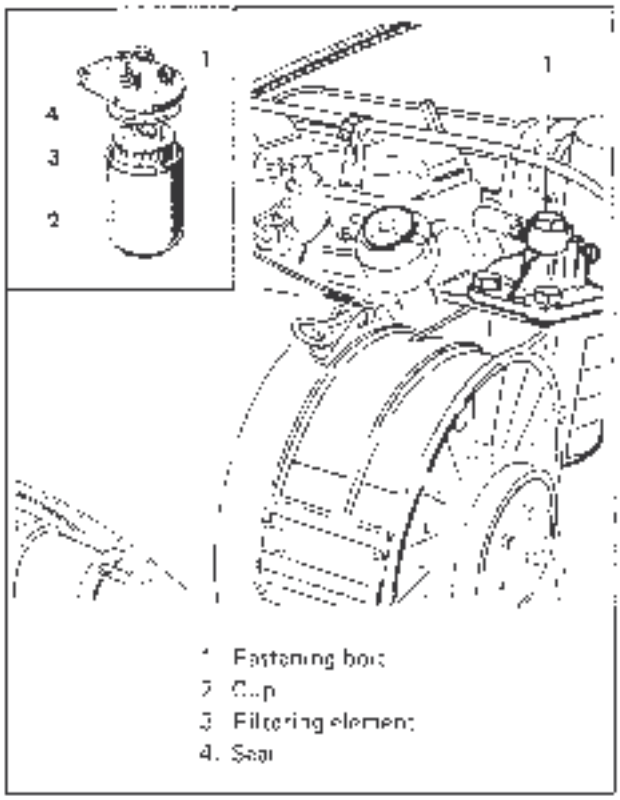


1. Fastening bolt
2. Cup
3. Filtering element
4. Seal

Figure 22. Fuel filter

HYDRAULIC SYSTEM: replace filtering cartridge of hydraulic system reservoir. Operating sequence (see fig. 23):

- remove flange (1) and filter unloosing screws (2);
- screw off filtering cartridge (3) from flange (1);
- screw down the new cartridge onto the flange. Reinstall the flange and fasten it through screws (2).

BRAKES: verify efficiency of service brakes and parking brake. If necessary take action for controls in following procedure outlined later in this booklet.

CLUTCH: verify efficiency of control system. If necessary take action for adjustment in following procedure outlined later in this booklet:

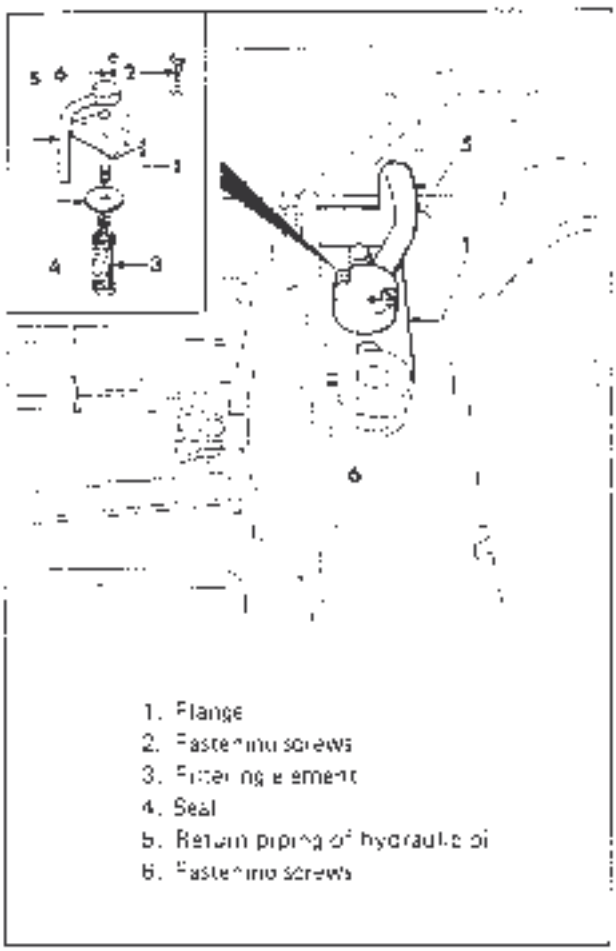


Figure 23. Adjustment of the differential locking control

EVERY 500 HOURS

HYDRAULIC SYSTEM: change oil (see fig. 10).
GEARBOX: change oil (see fig. 24).
REAR AXLE BOX: change oil (see fig. 25).


Figure 24. Oil filling plug for gearbox

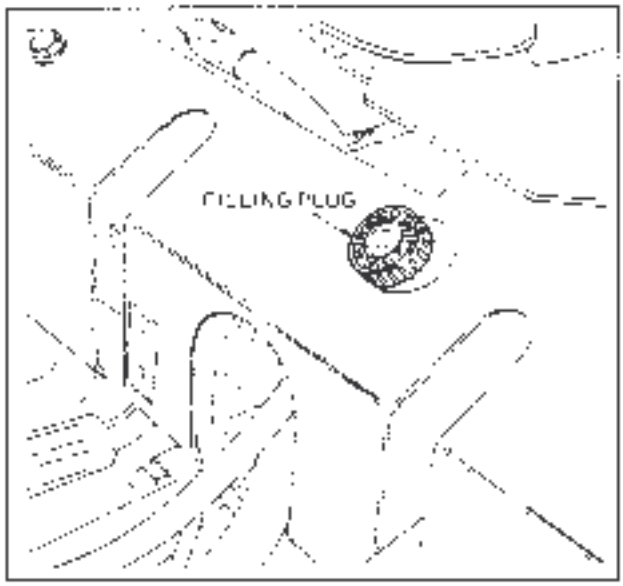


Figure 25. Oil filling plug for rear axle box

## INSPECTIONS AND ADJUSTMENTS (GENERAL)

Information and specifications given here below refer to adjustment operation to be carried out on "Ferrari 89" tractors exclusively.
Direction for any overhaul and repairs are contained in a purpose issued publication.

### BRAKES

#### Service brakes

1. SYSTEM INSPECTION: if the braking action is found to be delayed, bleed the system through bleed valves located on the brake cylinders (fig. 26, item 2). When bleeding is complete top off oil level in reservoir by adding new oil.

**WARNING**

To bleed air from the braking system, disjoin pipe (5) from the pump fitting and have air exhausted in the rear circuit; connect pipe (5) again and take action for bleeding the front circuit.

2. BRAKES ADJUSTMENT: if the idle stroke of pedals is found to be excessive, adjust the brake shoes as follows (see fig. 26):
   - turn screw (3) to cause internal cams to get in touch with jaws;
   - verify the brake pedal stroke and make sure that wheels are turning free;
   - actuate the brake pedal when machine is running, this will allow the brake jaws to self-center;
   - check adjustment of the control cables of the parking brake; if necessary follow procedure outlined.

#### Parking brake (see fig. 26)

If the braking action is found to be poor, adjust control cables through nuts (8) fitted on control lever of the parking or emergency brake.

**Note**

If braking shoes are found to be worn out, the internal lever of the hand brake is allowed to come in touch with hubs. This will eliminate the braking action. Replacement of shoes is then necessary.

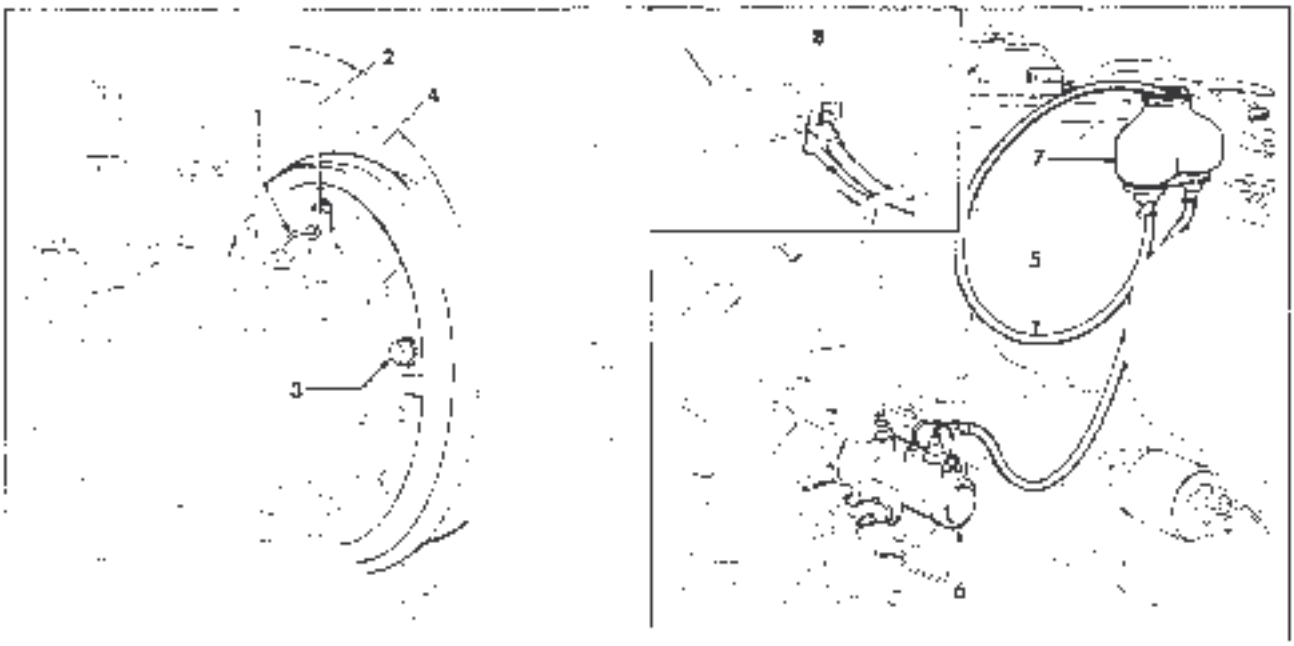


1. Oil delivery pipe to cylinder
2. Bleed valve
3. Adjusting screw for braking shoes opening
4. Braking shoe
5. Oil pipe from pump reservoir
6. Servocontrolled braking pump
7. Oil reservoir for braking system
8. Adjusting nuts for control cables

Figure 26. Bleeding of brake system and brake adjustment

## CLUTCH

1. The clutch pedal should make an idle stroke of approx. 15 mm prior to obtaining disengagement of clutch.
2. If the idle stroke is insufficient (clutch slippage) or excessive (disengagement is not complete) adjust the releasing control rod (see fig. 27) through adjusting nut (2) until an idle stroke of 15 mm is obtained.
3. In the event of unsuccessful adjusting procedure, have the clutch disassembled and inspected in a specialized workshop.

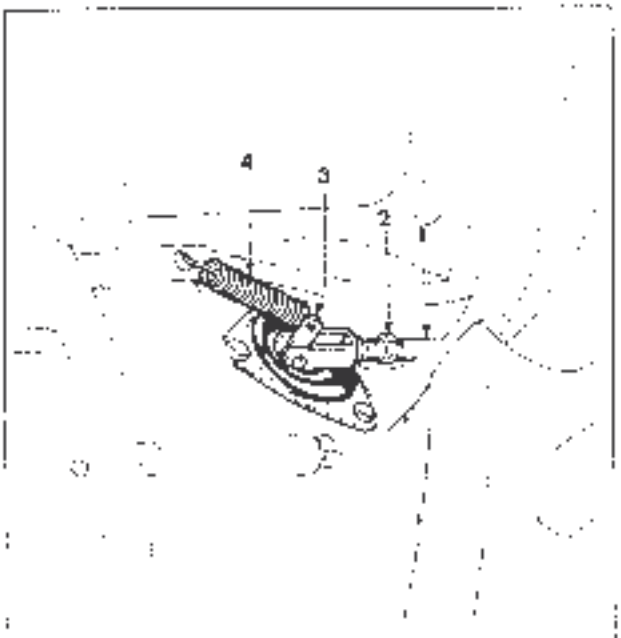


1. Control rod
2. Adjusting nut
3. Clutch control fork
4. Return spring

Figure 27. Clutch adjustment

## LOCKING OF THE DIFFERENTIALS

Periodically make sure the differential locking system is properly adjusted. A correct adjustment is achieved by following procedure outlined (see fig. 28).

1. Make sure that equalizer springs (1) are 2 mm approx. from spring retainer rings (2). Control lever to be in "LOCKED" position.
2. If adjustment is found to be improper, proceed through the purpose-fitted nuts (3).

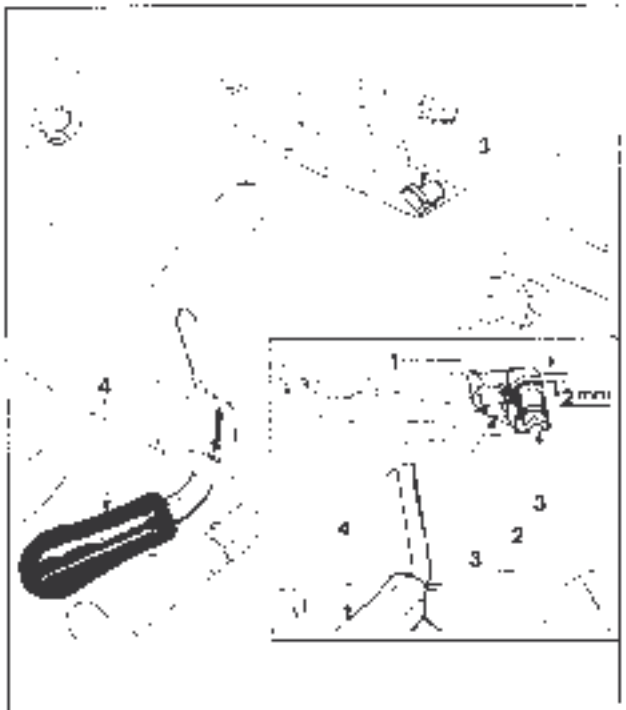


1. Equalizer springs
2. Retainer rings
3. Adjusting nuts
4. Differential locking lever

Figure 28. Differential locking adjustment

## HYDRAYLIC SYSTEM

### GENERAL

A schematic diagram of the hydraulic system is shown in fig. 29.
In the event of unsatisfactory or improper lifting of implements despite of smooth operation of the engine, the same procedure as described in pages concerning the hydraulic system maintenance is to be followed.

## ELECTRICAL EQUIPMENT

Tractor circuits are provided with protective fuses located under the engine-hood (see fig. 30).
The elementary wiring diagram including appliances supplied on request, is shown in fig. 31.

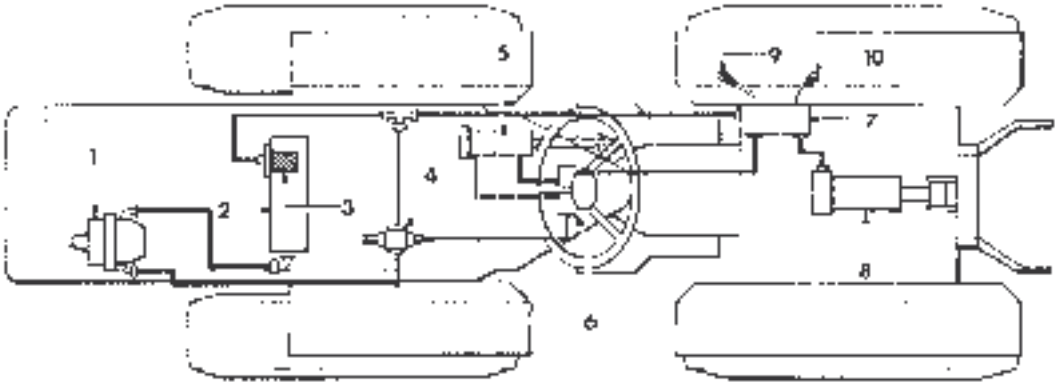


1. Hydraulic pump
2. Hydraulic oil reservoir
3. Filter on oil return
4. Relief valve
5. Steering jack
6. Hydraulic steering valve
7. Main control valve
8. Lifter jack
9. Control lever for implement up and down
10. Working depth adjusting lever

Figure 29. Hydraulic system diagram

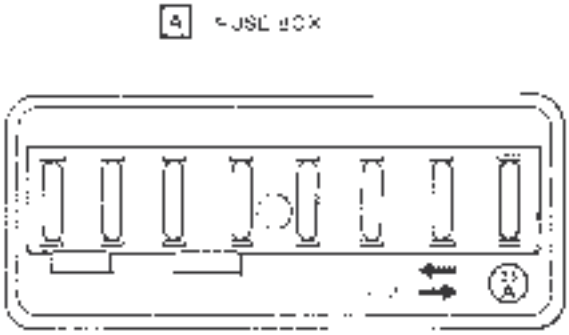


Figure 30. Fuse-box of electrical equipment

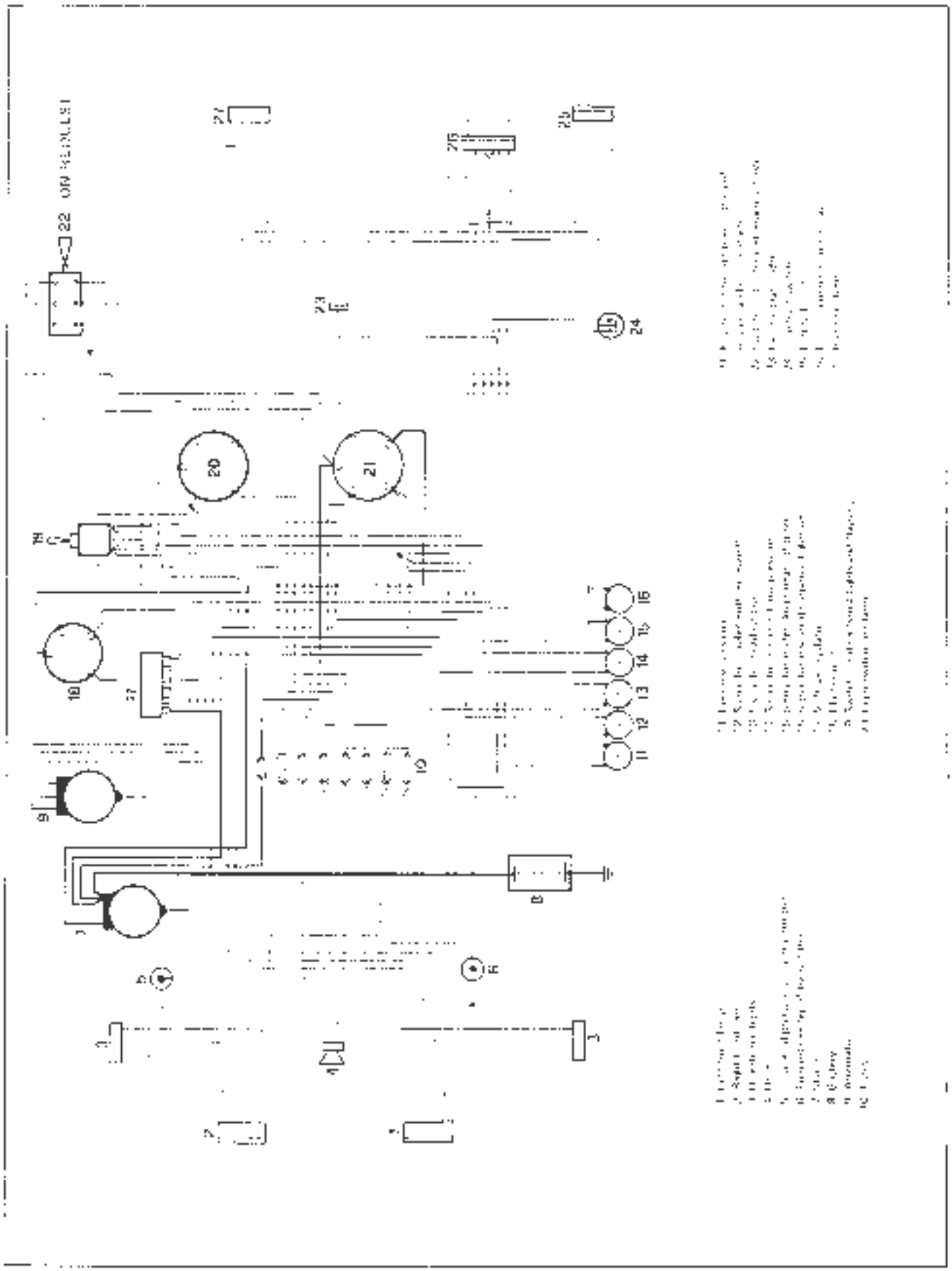

Figure 31. Electrical equipment

# HYDRAULIC SYSTEM

## SYSTEM INSPECTION

### GENERAL

All necessary operations for an accurate inspection are described here-below. Overhaul of the hydraulic system will ensure it is in the ideal working order. Recommended steps for setting valves are outlined as well. **Strictly follow prescribed procedure.**

### CHECKING OF OPERATING PRESSURE

**Preliminary operations**

a. Install a pressure gauge with 250 kg/sq cm end-of-scale (minimum) in the hydraulic pump delivery fitting (see fig. 32).

**Note**

Location of hydraulic pump on engine body may be different from that indicated in fig. 32. Location may vary according to the engine installed on tractor.

b. Start the tractor engine and maintain it operating at 2000 RPM approx.

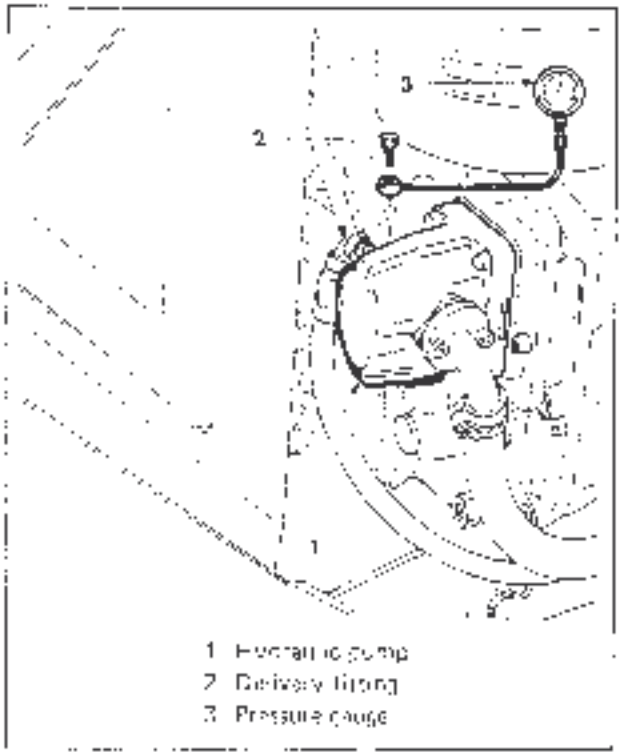


Figure 32. Installation of pressure gauge in the hydraulic pump delivery

### STEERING SYSTEM OPERATING PRESSURE

(See fig. 33 and fig. 34)

a. Through the steering wheel steer tractor wheels to right or left as far as practicable (steering jack to be fully extended or retracted).

b. Make sure pressure gauge reading is 100 to 110 kg/sq cm. If reading is different, adjust setting through valve (fig. 33 or fig. 34, item 1) of the hydraulic power steering unit, by screwing on or off adjusting screw (2) after removing valve cap (3).

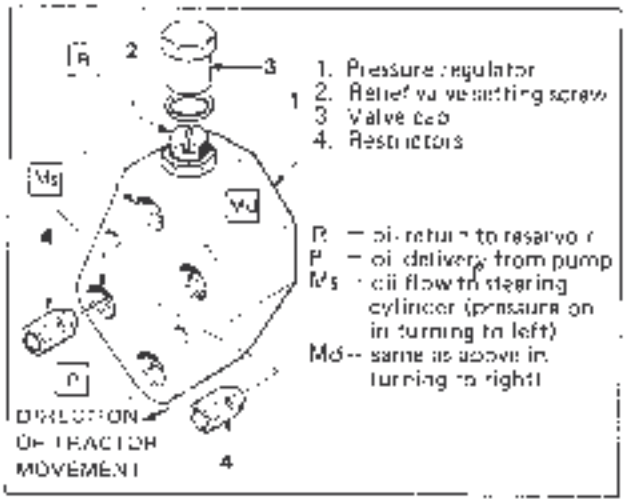


Figure 33. Setting of the hydraulic power steering valve (example A)

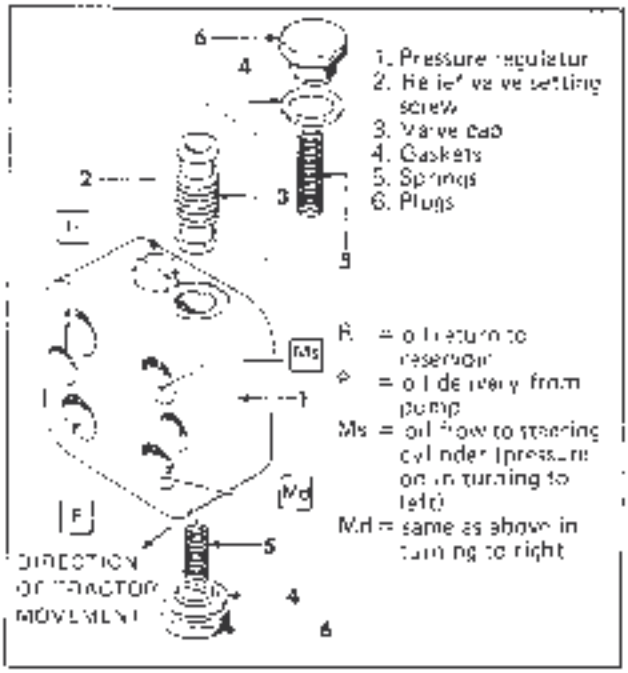


Figure 34. Setting of the hydraulic power steering valve (example B)

## OPERATING PRESSURE OF HYDRAULIC LIFTER (see fig. 35)

a. Place lever (2) in the "LIFT" position and lever (1) in "0" on the graduated scale.

b. Fully depress lever (3) to direction shown in the figure and hold it in place. Make sure that pressure gauge reads 100 to 120 kg/sq.cm.

c. If not, make sure that no evident leakage occurs in the main control valve, remove cover (4) and clean valves located beneath.

**CAUTION**

Do not tamper with adjusting nut (5) on main control valve.
ADJUSTMENT HAS BEEN ACCOMPLISHED BY TRACTOR MANUFACTURER AT TIME OF INSTALLATION.

## RELIEF VALVE OPERATING PRESSURE

a. Fully depress lever (fig. 35, item 3) to direction shown and hold it in place.

b. Steer wheels to right or left as far as practicable (jack to be all the way extended or retracted). Make sure that pressure gauge reading is 130 to 140 kg/sq.cm.

c. If pressure is found to be lower, set properly the hydraulic system relief valve (see fig. 36) in screwing on screwing off adjusting nut with a screwdriver. Remove cap prior to taking action.

**WARNING**

Operating pressure in the hydraulic system never to exceed 170 kg/sq.cm.

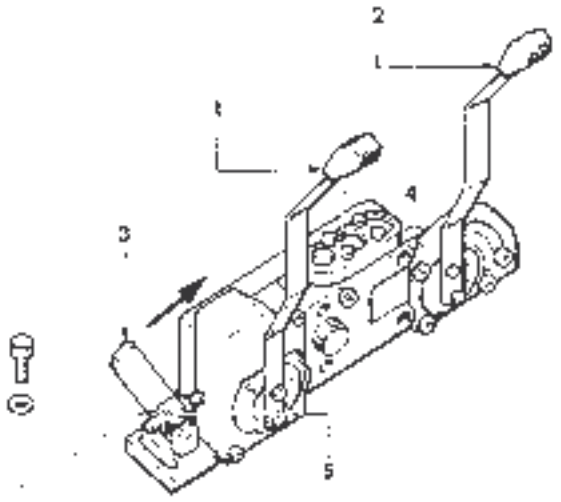


Note

See fig. 37 for additional details.

1. Controlled effort lever
2. Lifter control lever
3. Controlled effort sensitivity lever
4. Cover for distributor valves
5. Adjusting nut

Figure 35. Check of hydraulic lifter operating pressure

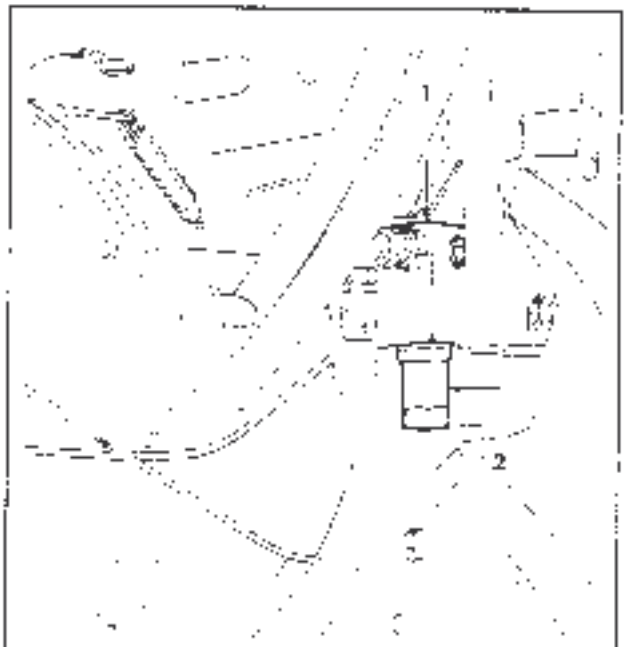


1. Relief valve
2. Adjusting nut protective cap

Figure 36. Setting of the hydraulic system relief valve

# TROUBLE SHOOTING

## HYDRAULIC LIFTER
(see fig. 37)

**Note**

Any failure in lifter operation is generally caused by improper or contaminated oil. When changing or refilling oil, rig duly adhere to directions furnished by manufacturer and exercise good cleaning and house-keeping practices.

| TROUBLE | PROBABLE CAUSE AND REMEDY |
|---|---|
| a. Lifter will not come up (even at load) | 1. Insufficient oil level. Fill oil reservoir.<br>2. Jamming pilot valve (14) caused by impurities contained in oil. Unscrew the four screws holding cover (26), unlock valve and clean. To prevent trouble from taking place again, carefully clean oil filter cartridge on return (see fig. 23). |
| b. Lifter does not lower. (This may be encountered in the case of a new apparatus after a fairly extended inactivity from final test). | 1. Jamming of shaft (3). Dismount cover (22), place the control lever in down position. Unlock shaft gently tapping on. |
| c. Jumping of lifter in coming up. | 1. Insufficient oil level. Fill oil reservoir.<br>2. Air drawn into the suction line. Check connections for proper tightening and replace packings. Bleed tubing by squeezing.<br>3. Air drawn through the pump oil seal. Replace oil seal. |
| d. Lifter does not remain in place, it rises or falls with jerking action. When engine is off, load creeps down. | 1. Leaking check valve (16). Take off cover (26), remove valve and clean valve seat. If seat and valve are found to be in good conditions and trouble is still encountered: change or filter oil and clean cartridge.<br>2. Oil seepage through piston seal or seal rings of cylinder cap, or through seal ring located between the body of the distributor block and the housing. Replace seal. |
| e. Poor lifting power. Anomalous overheating of the system. | 1. Pump low efficiency. Overhaul pump or replace it.<br>2. Improper setting of relief valve (9, 10). Remove cover (26) and replace spring.<br>3. Valve plunger (9) and seat (10) are out of order and allow oil seepage. Replace the valve.<br>4. Impurity on the pilot valve seat (14). Take off cover (26), remove valve and clean valve seat.<br>5. Pilot valve seat worn out (14). Overhaul distributor block. |
| f. When lifter arms are fully "UP", relief valve cuts in. | 1. Jamming of shaft (3). Disassemble cover (22), place control lever in down position and release shaft by tapping.<br>2. Improper setting of the raising stop. Lift lifter arms (fig. 38, detail II), through lever (7), adjust screw (3) with a screwdriver (4) and engine speed rate is caused to increase. Hydraulic circuit not under pressure any longer. |
| g. Escape of heated oil through the breather plug. | 1. Oil level too high or too low. Top off oil to recommended level.<br>2. Air drawn through the suction line. Tighten the fittings, inspect welds, replace gasket.<br>3. Air drawn through pump oil seal. Replace oil seal. |

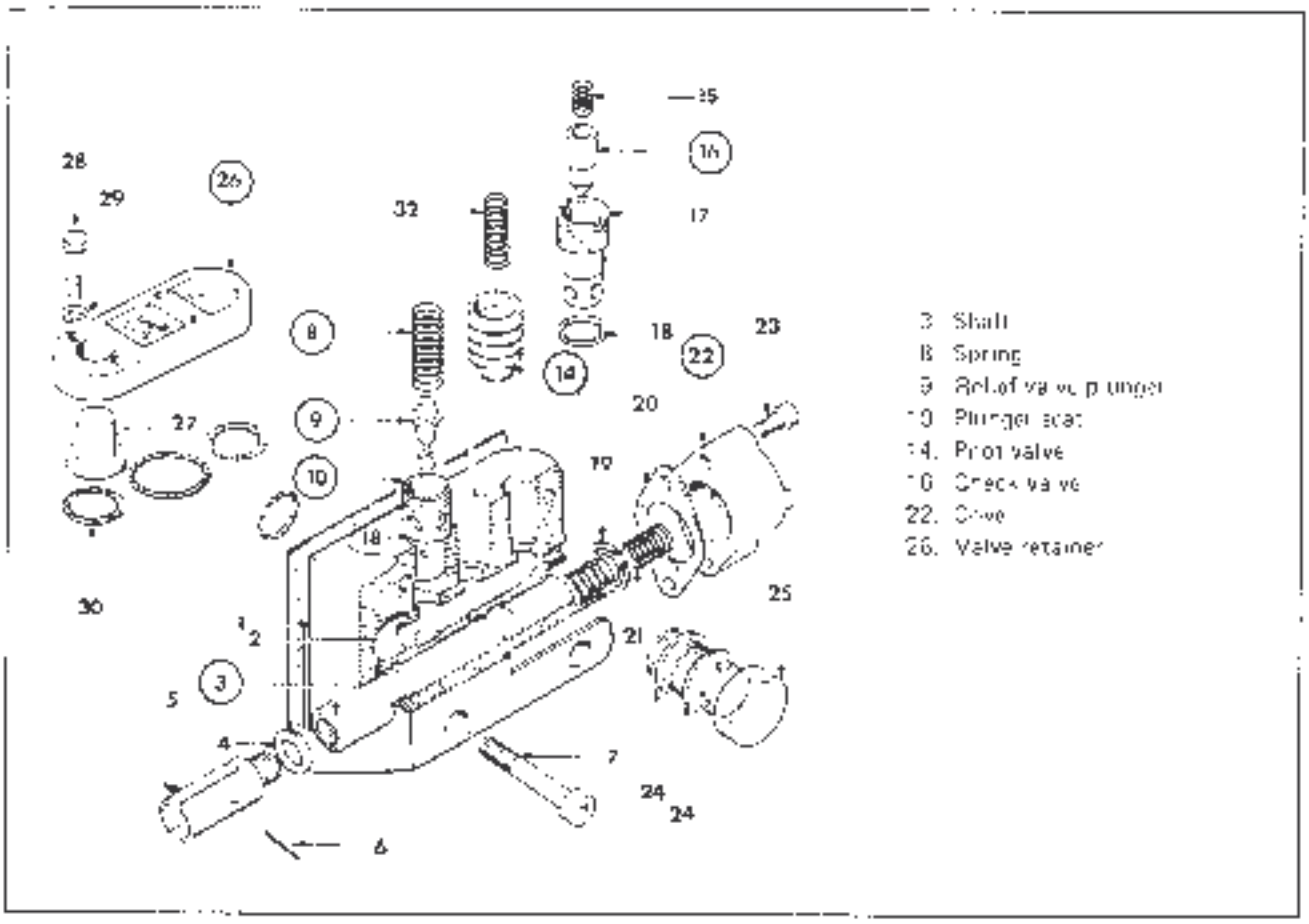


Figure 37. Hydraulic lifter control valve

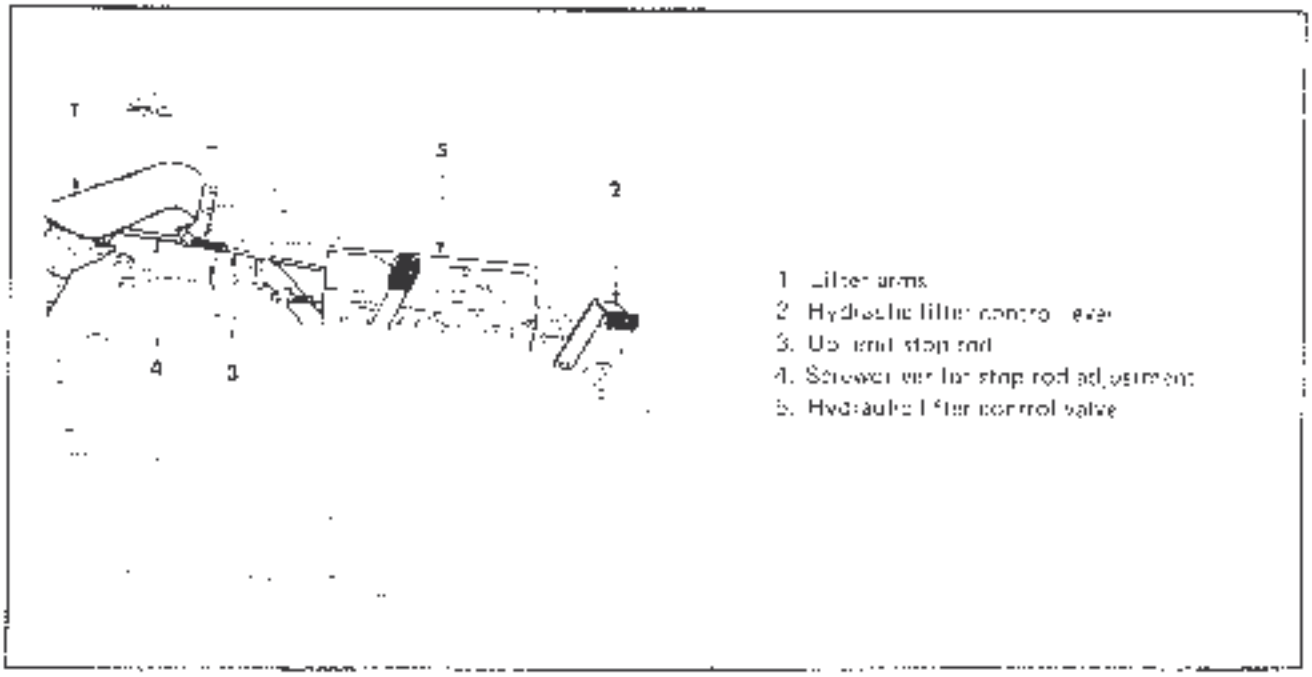


Figure 38. Adjustment of UP link stop rod

## HYDRAULIC STEERING

| TROUBLE | PROBABLE CAUSE AND REMEDY |
|---|---|
| a. Incorrect steering movement | 1. Air in the steering jacks. Bleed the system.<br>2. Jack packings are faulty.<br>Replace all jack seals<br>3. Hydraulic steering valve dirty. Where valve of fig. 33 is fitted, disassemble and clean restrictors. Where valve of fig. 34 is provided, disassemble and clean valve piston and verify that springs are not broken. |
| b. Excessive force required to rotate the steering wheel. | 1. Differential locking engaged. Release it.<br>2. Improper adjustment of lifter in stop. Lower the lifter. If trouble is not solved, follow suggestions given under section "I" concerning trouble shooting of hydraulic lifter |

### CAUTION

In the event the above described inspection as well as circuit cleaning and replacement of worn out packings do not sufficient to solve the trouble encountered, HAVE THE HYDRAULIC POWER STEERING UNIT REPLACED WITHOUT DISMANTLING. ANY HYDRAULIC POWER STEERING UNIT REPAIR SHALL BE MADE EXCLUSIVELY BY MANUFACTURER OR AUTHORIZED PERSONNEL. THE MANUFACTURER DISCLAIMS ALL LIABILITY OR REQUEST OF WARRANTY IF HYDRAULIC POWER STEERING UNIT APPEARS TO BE TAMPERED WITH.

# HOW TO ORDER SPARE PARTS

## NOTE

When ordering, always state

- TYPE AND MODEL OF THE MACHINE
- SERIAL NUMBER OF THE MACHINE
- CODE NUMBER OF THE PART
- REQUIRED QUANTITY
- REQUIRED DELIVERY TERMS
- ADDRESS OF THE ORDERING FIRM

## HOW TO IDENTIFY A PART

Identify the piece required on the figure (the whole machine has been split into well defined units, as shown by the index of the figures).

- Read the code number. If the said number does not have any symbol alongside it, it is valid for all machines listed on the top right of the figure. If the code number has one or more symbols alongside it, or if a piece has more than one number and symbols alongside them, the right one must be identified by reading the meaning of the symbols.

For better machine-running, greater security and guarantee, always ask for ORIGINAL SPARE PARTS.

# SYMBOLS USED IN THE SPARE PARTS CATALOGUE

(The numbers mentioned are only an indication)

— ROUND - ○ ● ◐ ◑ ⊖ ⊗ etc.

Indications of validity for type of machine

Example

◑ 5200 — The parts so indicated are valid only for the machine model "5200"

— SQUARE - ■ ■ ■ etc.

Indications of validity of the individual parts

Example

■ - ● 595001 — The parts so indicated are valid for machines up to Serial N° 595001

■ 595002 → The parts so indicated are valid for machines from Serial N° 595002 onwards

TRIANGULAR - ▲ ▲ ▼ ▼ etc.

The parts are valid only for the subassemblies indicated alongside TRIANGULAR SYMBOLS. Symbols are listed in the index.

### Subassembly symbols

ENGINES

Ex. F3000F — Indicates an engine type F3000F

ROTAVATORS WITH FIXED HOOD

Ex. cm 105 — It indicates a rotavator with 105 cm fixed hood

ROTAVATOR WITH ADJUSTABLE HOOD

Ex. cm 75 — It indicates a rotavator with 75 cm adjustable hood

ADJUSTABLE DISC WHEEL

Ex. 5.00-12 — Shows the adjustable disc wheel type 5.00-12

FIXED DISC WHEEL

Ex. 6.5-16 — Shows the fixed disc wheel type 6.5-16

LENGTH TO BE SHOWN

Ex. cm 100 — Shows that the item is long 100 cm

PUMPS

Ex. SL985 — It indicates a hydraulic pump type SL985

ELECTRIC SYSTEM

Ex. EXPORT — It indicates an electrical system for export type machines

JOINT

Ex. J284 — Indicates a joint type J284

CUTTING BARS

Ex. cm 125 — It indicates a cutting bar 125 cm wide

CUTTING BAR TEETH

Ex. cm 36 — It indicates teeth with centre distance 36 cm

TYPE OF MACHINE

Ex. 99 — It is valid for machine model 99

- ASTERISKS

Indications of validity for standard parts, parts on request, parts made by another manufacturer

✱ A.R. — The part thus indicated is supplied as at Customer's request

STANDARD — The part thus indicated is standard make or assembly

Ditta S.p.A. — The part thus marked is valid only for the Customer indicated

— ABBREVIATIONS

Left — Right

SEE NEXT PAGE

FERRARI

# SPARE PARTS CATALOGUE

AGRICULTURAL TRACTOR MOD. 85

## INDEX OF ILLUSTRATIONS



HYDRAULIC EQUIPMENT

Refer to figures H00007 through H00533

FERRARI

CARROZZERIA (1ª PARTE)
BODY (1st PART)
CARROSSERIE (1ère PARTIE)
KAROSSERIE (1. TEIL)
CARROCERIA (1ª PARTE)

○ ● ◑

# 85-86-86RS

| 1a-0677 | 2a-0278 |
|---|---|

| | | | | | | | |
|---|---|---|---|---|---|---|---|
| | No. ORDIN. | 9 | 11.0033.271 | 25 | 16.0032.205 ○●↓ | – | 11.0032.415 ◑↓ |
| | MOTO No. | 10 | 11.0073.277 | | 16.0032.206 ○●↓ | – | 16.0032.220 ○●↓ |
| | No. ORDIN. | 11 | 84.3943.000 | | 16.0032.207 ◑↓ | – | 11.0032.416 ◑↓ |
| | VESTITO No. | 12 | 86.3724.000 | | 16.0032.203 ◑↓ | 26 | 85.8080.050 |
| | No. DIFFERENZIA | 13 | 85.3294.000 | 26 | 16.0032.202 ○● | 28 | 85.8154.010 △ |
| 1 | 16.0032.245 △ | 14 | 84.3755.000 ○● | – | 16.0032.204 ◑ | | 85.5162.000 ▲ |
| | 16.0032.243 ○▽ | 15 | 84.3812.000 | 27 | 11.0032.427 | 40 | 11.0032.321 |
| – | 16.0032.244 ▲ | 16 | 84.3812.000 | 28 | 10.0017.500 | 41 | 05.0032.221 |
| – | 16.0032.250 ○△ | 17 | 06.0015.314 | 29 | 04.3804.050 | 42 | 85.4147.000 |
| 2 | 11.0032.901 | 18 | 80.4020.000 | 30 | 01.4550.202 | 43 | 85.7150.000 ▲ |
| 3 | 11.0032.902 | 19 | 11.0032.335 | 31 | 11.0032.429 | – | 85.7005.000 △ |
| 4 | 81.4020.010 | 20 | 16.0032.226 | 32 | 85.9570.202 | 44 | 85.7004.000 |
| 5 | 11.0032.347 | 21 | 84.3755.050 ○● | 33 | 85.9605.202 | 45 | 85.6146.000 |
| 6 | 94.3522.000 | 22 | 86.3705.000 ○● | 34 | 87.8037.202 | 46 | 16.0032.224 ○● |
| 7 | 81.4517.000 | – | 86.3411.000 ◑ | 35 | 85.3275.002 ○● | | 16.0032.201 ◑ |
| 8 | 16.0032.910 ● | 22 | 86.3705.000 ○● | 36 | 85.3305.002 ○● | 47 | 16.0032.203 ○● |
| | 16.0032.900 ○ | | 86.3411.000 ◑ | – | 85.3735.002 ◑ | 48 | 84.3443.050 ◑ |
| | 16.0032.901 ◑ | 24 | 84.3912.000 ○● | 37 | 16.0032.221 ○●↓ | | |

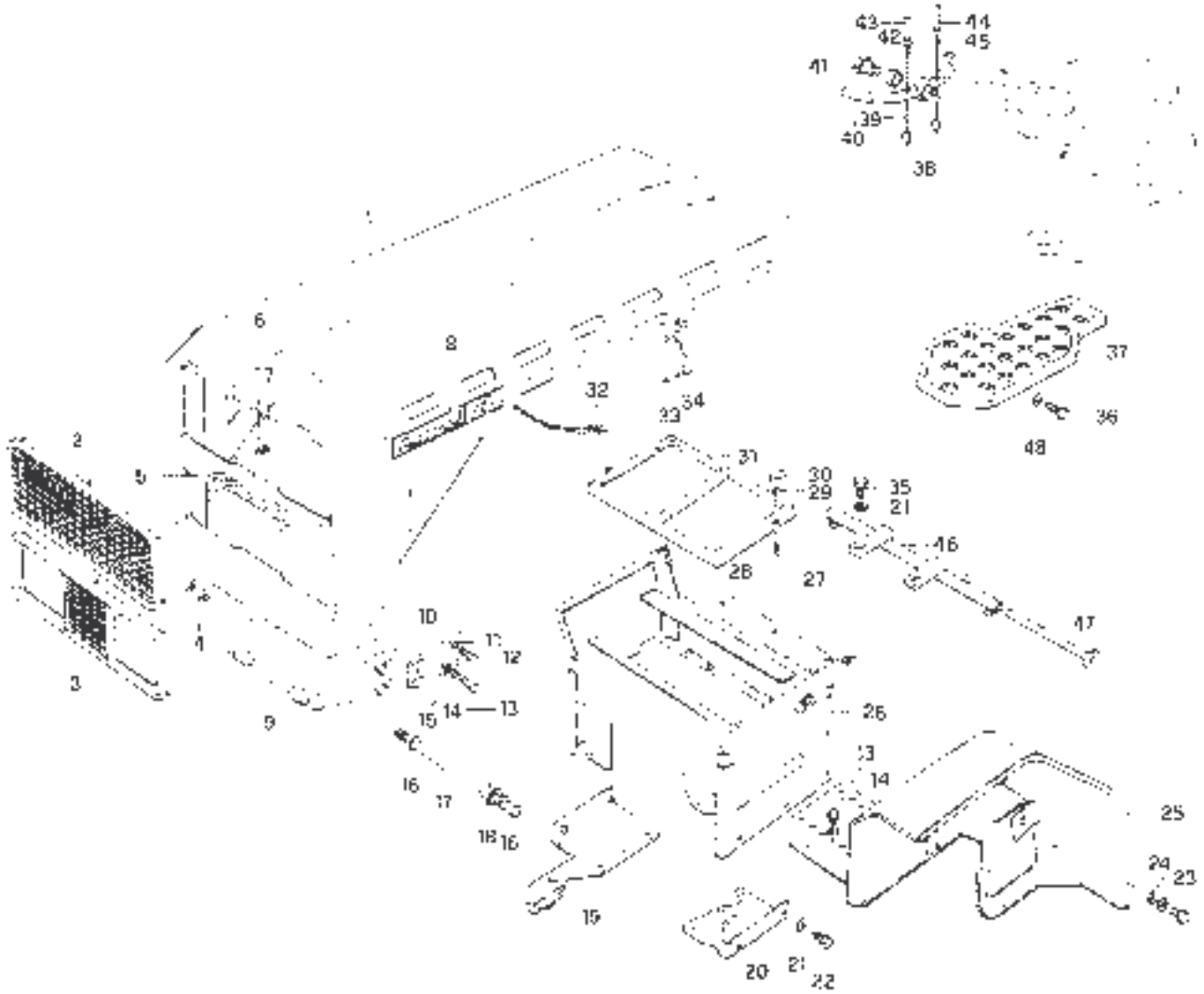

T.P.S. 4-289

| | |
|---|---|
| ▲ LDA673-833 | DOPPIA FRIZIONE |
| ▽ LDA832 | DOUBLE CLUTCH |
| | EMBRAYAGE DOUBLE |
| | ZWEIFACHKUPPLUNG |
| | EMBRAGUE DOBLE |
| ▲ LDA673-833 | |
| △ LDA837 | |

| | |
|---|---|
| ~~C1009A~~ | |
| C1009A | 1 |

No. ORDIN.
PART NO.
No. ORDIN.
PEZZI N°
No. REFERENCIA

| | | | |
|---|---|---|---|
| 1 | 16.0032.267 ✱ | 29 | 85.2811.020 |
| 2 | 16.0032.263 ✱ | 30 | 16.0032.227 ○● |
| 3 | 16.0032.264 ✱ | - | 16.0033.227 ◑ |
| 4 | 84.3755.020 ✱ | 31 | 84.3818.000 |
| 5 | 86.3572.020 ✱ | 32 | 85.3328.000 |
| 6 | 81.4726.000 ✱ | 33 | 81.4581.000 |
| 7 | 84.2687.000 ✱ | 34 | 84.3643.000 ○● |
| 8 | 86.4716.000 ✱ | 35 | 16.0032.251 |
| 9 | 84.2927.000 ✱ | | 16.0032.252 |
| 10 | 86.4220.000 ✱ | 36 | 11.0020.264 |
| 11 | 86.3254.000 | 37 | 85.2666.000 ○● |
| 12 | 84.2613.000 | 38 | 16.0032.281 |
| 13 | 01.0001.035 | 39 | 11.0020.221 |
| 14 | 86.2108.000 | 40 | 85.2007.010 |
| 15 | 00.0654.000 | 41 | 84.3570.000 |
| 16 | 16.0032.013 | 42 | 81.4546.000 |
| 17 | 04.9210.000 | 43 | 16.0032.276 |
| 18 | 85.2653.000 | 44 | 85.3683.000 |
| 19 | 16.0032.247 | 45 | 16.0032.275 ○● |
| 20 | 16.0032.250 | - | 16.0033.205 ◑ |
| 21 | 85.4587.000 | - | 16.0032.224 ○● |
| 22 | 84.3670.000 | - | 16.0033.206 ◑ |
| 23 | 85.2488.000 | 46 | 85.3276.000 |
| 24 | 84.3700.000 | 47 | 84.3612.000 |
| 25 | 16.0032.235 | 48 | 16.0032.225 ○● |
| 26 | 16.0032.200 ○● | 49 | 16.0032.263 |
| | 16.0033.200 ◑ | 50 | 16.0032.264 |
| 27 | 49.2168.039 | 51 | 81.4644.000 |
| 28 | 16.0032.010 | | |

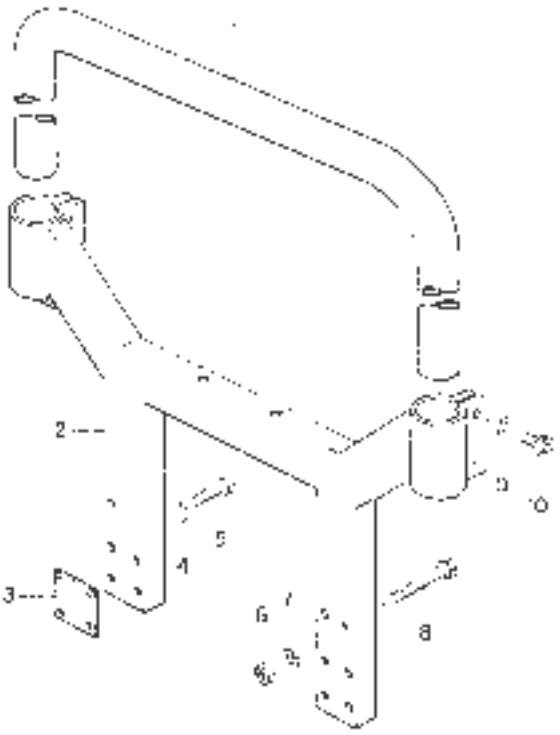

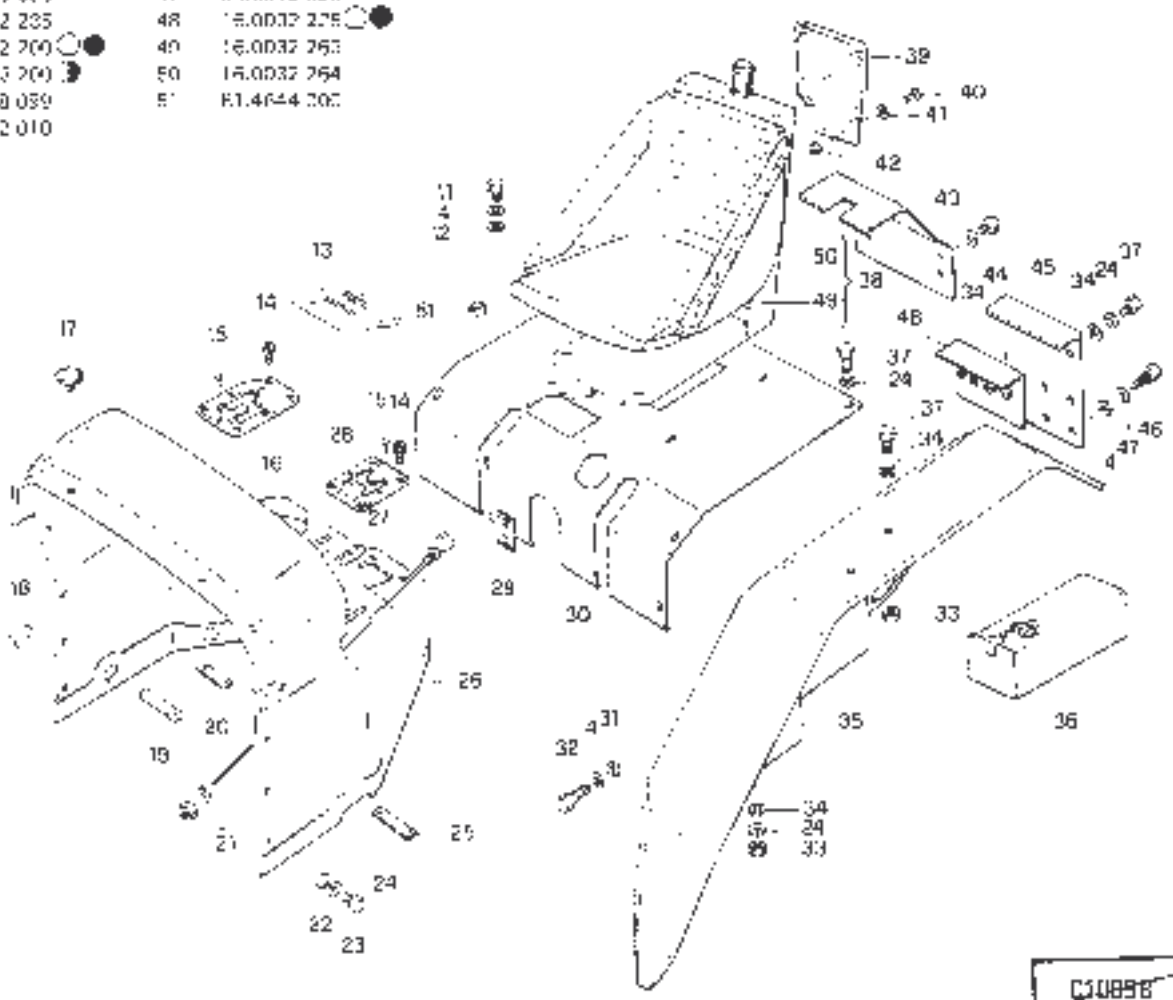

✱ A.R.

C10898 | 1

| | No. ORDINE | | No. ORDINE | | No. ORDINE | | No. ORDINE |
|---|---|---|---|---|---|---|---|
| 1 | 16.0233.210 | 11 | 16.0016.212 | 21 | 81.4708.000 | 31 | 50.3554.000 |
| 2 | 81.0505.000 | 12 | 53.1139.000 | 22 | 96.3649.000 | 32 | 56.2862.000 |
| 3 | 84.3585.000 | 13 | 50.8835.000 | 23 | 16.0016.202 | 33 | 84.3543.000 |
| 4 | 82.6538.000 | 14 | 16.0016.012 | 24 | 80.2054.000 | 34 | 16.0016.001 |
| 5 | 16.0015.216 | 15 | 81.4541.000 | 25 | 16.0016.216 | 35 | 16.0016.904 |
| 6 | 81.4581.000 | 16 | 96.2159.000 | 26 | 16.0015.902 | 36 | 96.3273.000 |
| 7 | 96.0060.000 | 17 | 16.0016.803 | 27 | 96.3047.000 | 37 | 84.2755.000 |
| 8 | 83.1595.000 | 18 | 16.0016.210 | 28 | 16.0016.011 | 38 | 16.0016.010 |
| 9 | 11.0015.003 | 19 | 54.3679.000 | 29 | 16.0016.902 | 39 | 16.0010.200 |
| 10 | 11.0015.209 | 20 | 84.3543.000 | 30 | 81.4544.000 | | |

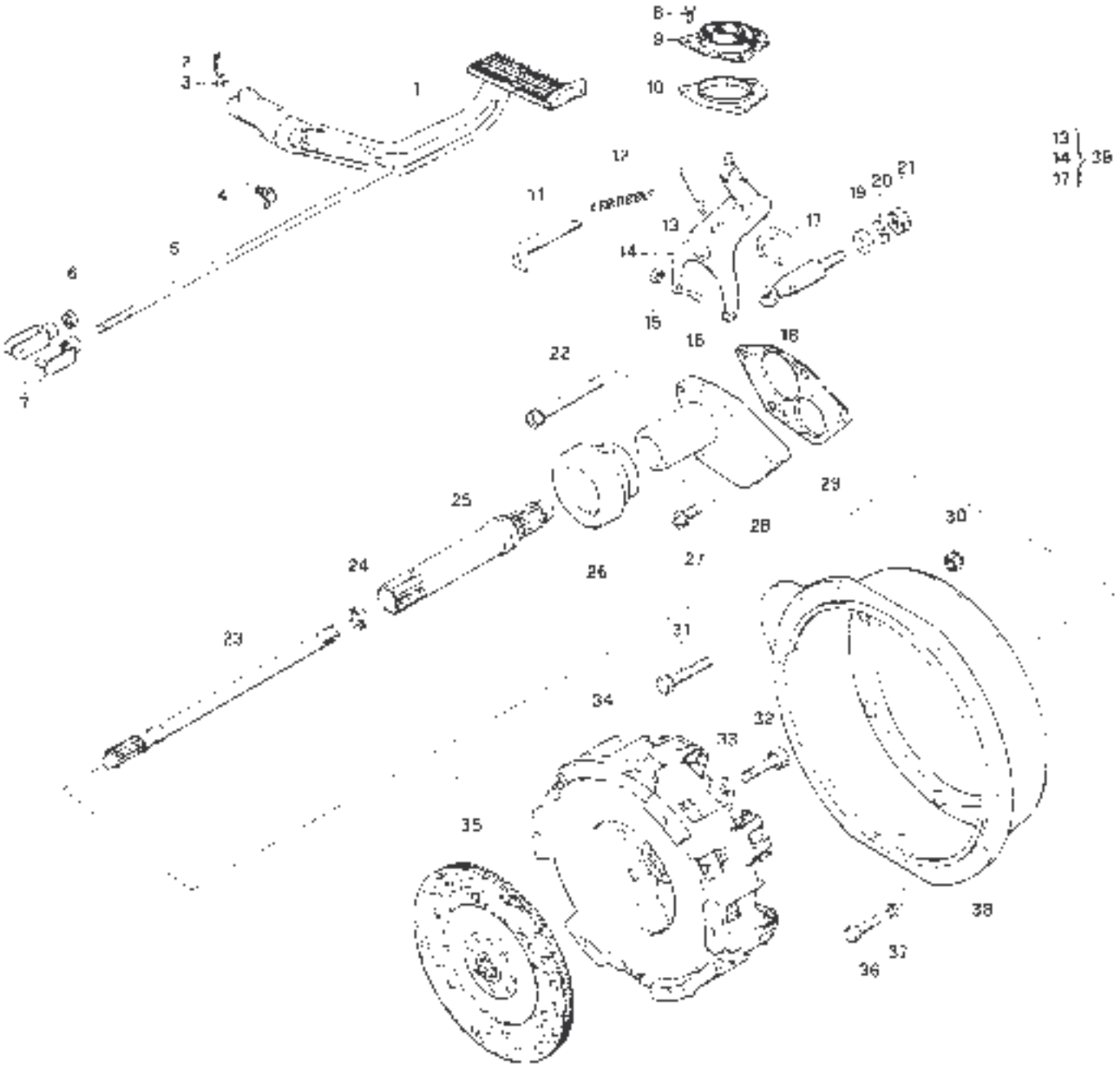

| | No. ORDIN. | | No. ORDIN. | | No. ORDIN. |
|---|---|---|---|---|---|
| 1 | 81.2574.000 | 11 | 81.9044.000 | 21 | 86.0060.000 |
| 2 | 16.0015.902 | 12 | 16.0015.201 | 22 | 81.4581.000 |
| 3 | 16.0015.901 | 13 | 16.0015.900 | 23 | 16.0032.234 |
| 4 | 80.3278.000 | 14 | 81.9124.050 | 24 | 82.6039.000 |
| 5 | 84.0755.000 | 15 | 81.9124.010 | 25 | 84.3685.000 |
| 6 | 86.3554.000 | 16 | 16.0015.200 | 26 | 81.0505.000 |
| 7 | 84.3643.560 | 17 | 93.1139.030 | 27 | 16.0032.218 |
| 8 | 80.2554.000 | 18 | 86.1996.000 | 28 | 84.3817.000 |
| 9 | 85.1302.000 | 19 | 11.0015.903 | 29 | 86.3155.000 |
| 10 | 16.0015.510 | 20 | 11.0015.239 | | |

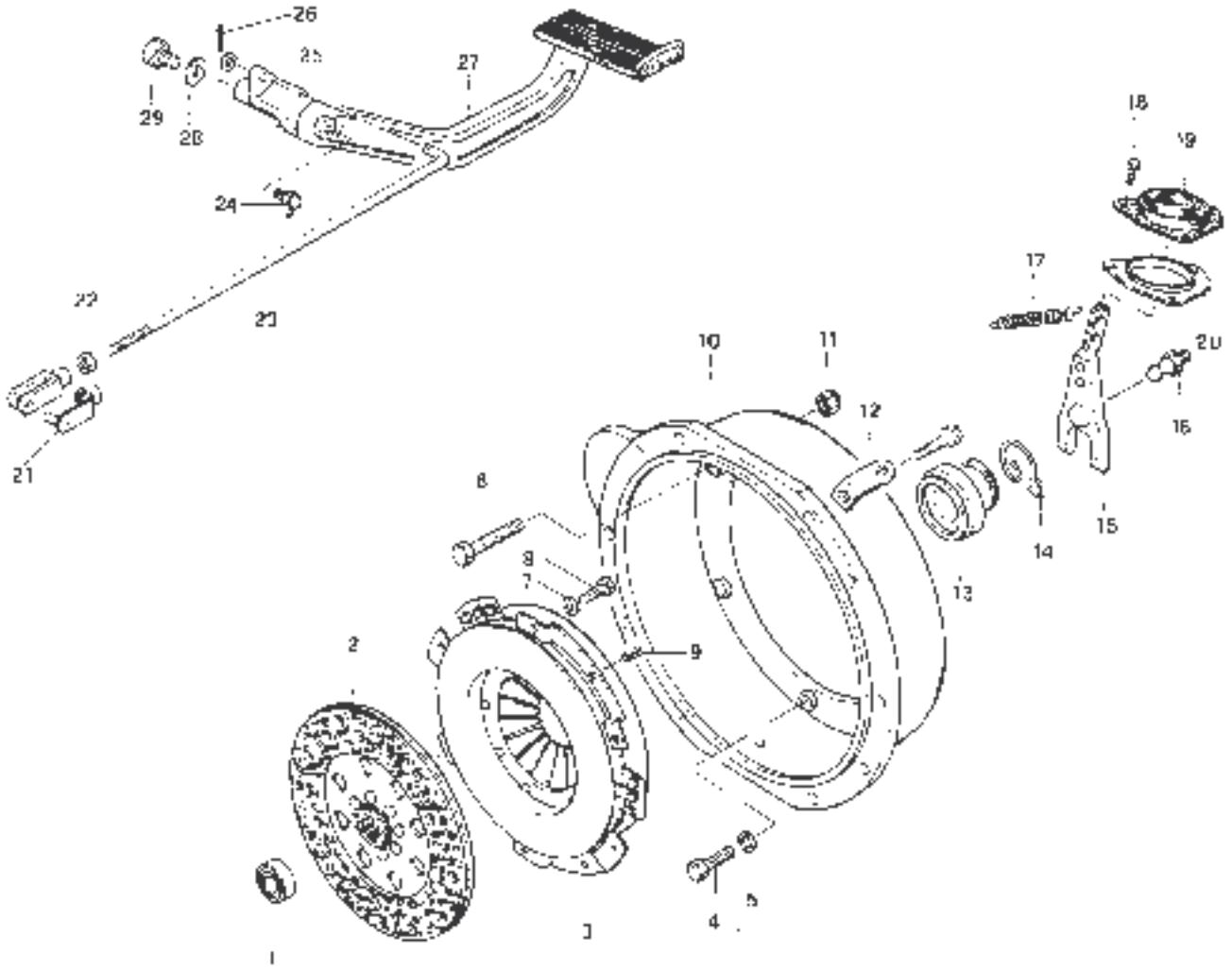

| | No. ORDIN |
|---|---|
| 1 | 84.0647.000 |
| 2 | 80.2457.000 |
| 3 | 80.0105.000 |
| 4 | 16.0005.013 |
| 5 | 16.0005.271 |
| 6 | 86.0353.000 |
| 7 | 84.3755.000 |
| 8 | 16.0005.260 |
| 9 | 80.2605.000 |
| 10 | 80.0253.000 |
| 11 | 11.0006.071 |
| 12 | 00.1005.811 |
| 13 | 05.2766.000 |
| 14 | 16.0016.514 ▲ |
| 15 | 16.0016.515 ▲ |
| 16 | 16.0005.515 |
| 17 | 16.0005.095 |
| 18 | 85.0513.000 |
| 19 | 85.2676.000 |
| 20 | 84.3603.000 |
| 21 | 85.3113.000 |
| 22 | 16.0005.904 |
| 23 | 84.2108.000 |
| 24 | 11.0006.905 |
| 25 | 16.0005.012 |
| 26 | 85.1409.000 |
| 27 | 16.0005.901 |
| 28 | 16.0005.011 |
| 29 | 58.3533.000 |

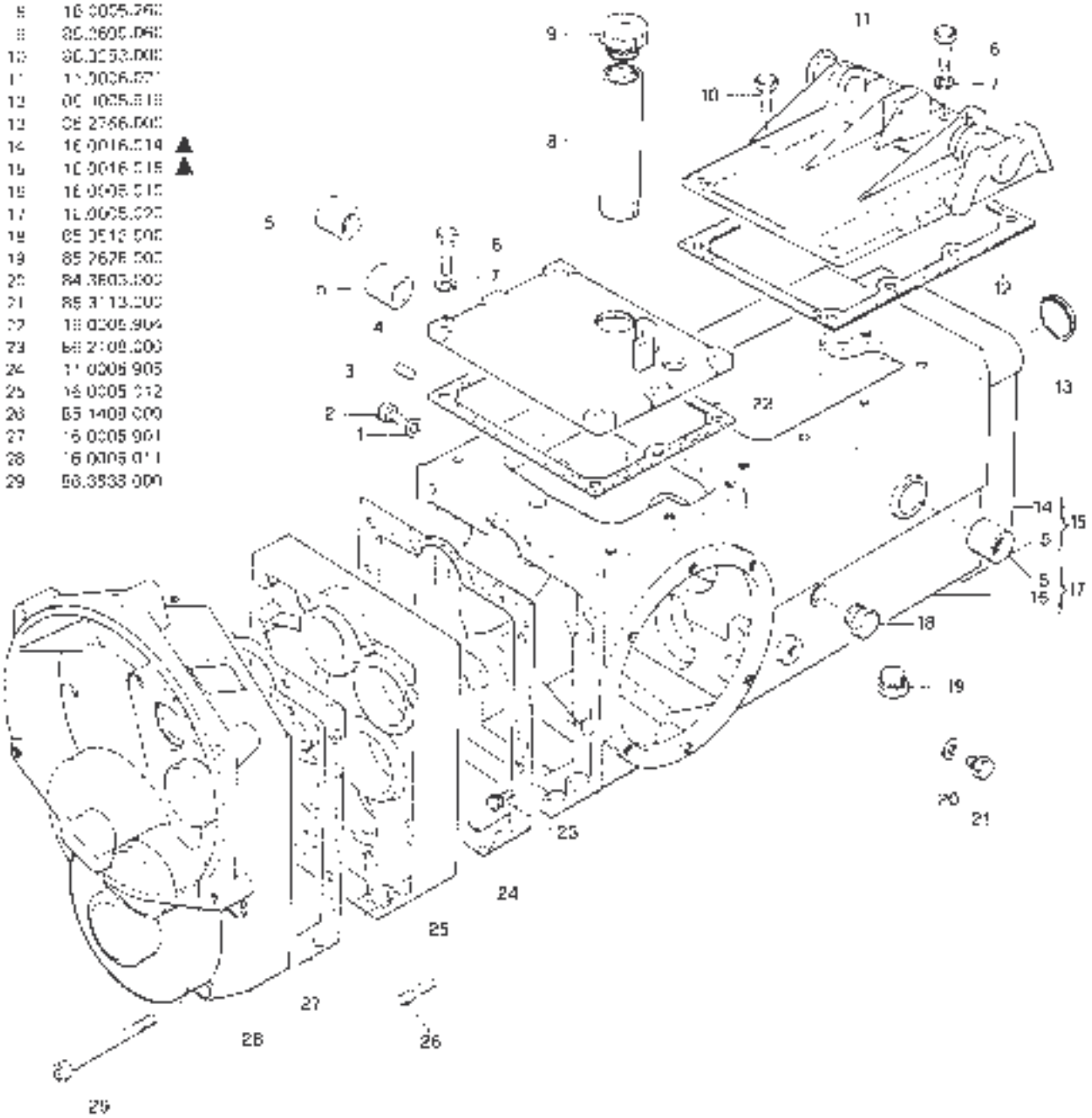




▲ VERSIONE DOPPIA FRIZIONE
*DOUBLE CLUTCH*

| | No. ORDIN. | | No. ORDIN | | No. ORDIN |
|---|---|---|---|---|---|
| 1 | 80.2138.000 | 12 | 84.4278.000 | 23 | 80.1220.000 |
| 2 | 80.1259.020 | 13 | 81.2708.020 | 24 | 16.0016.204 |
| 3 | 16.0016.212 | 14 | 16.0016.201 | 25 | 85.1150.000 |
| 4 | 81.2054.010 | 15 | 80.1395.000 | 26 | 80.1125.000 |
| 5 | 84.4467.000 | 16 | 81.2507.000 | 27 | 16.2016.205 |
| 6 | 80.1264.000 | 17 | 80.0047.000 | 28 | 16.2016.206 |
| 7 | 16.2016.015 | 18 | 16.0016.211 | 29 | 16.2016.207 |
| 8 | 16.2016.013 | 19 | 86.2019.000 | 30 | 81.2562.000 |
| 9 | 81.2708.010 | 20 | 16.0016.218 | 31 | 82.1246.000 |
| 10 | 16.2016.209 | 21 | 81.2731.000 | 32 | 16.0016.217 |
| 11 | 80.1185.000 | 22 | 16.2016.100 | | |

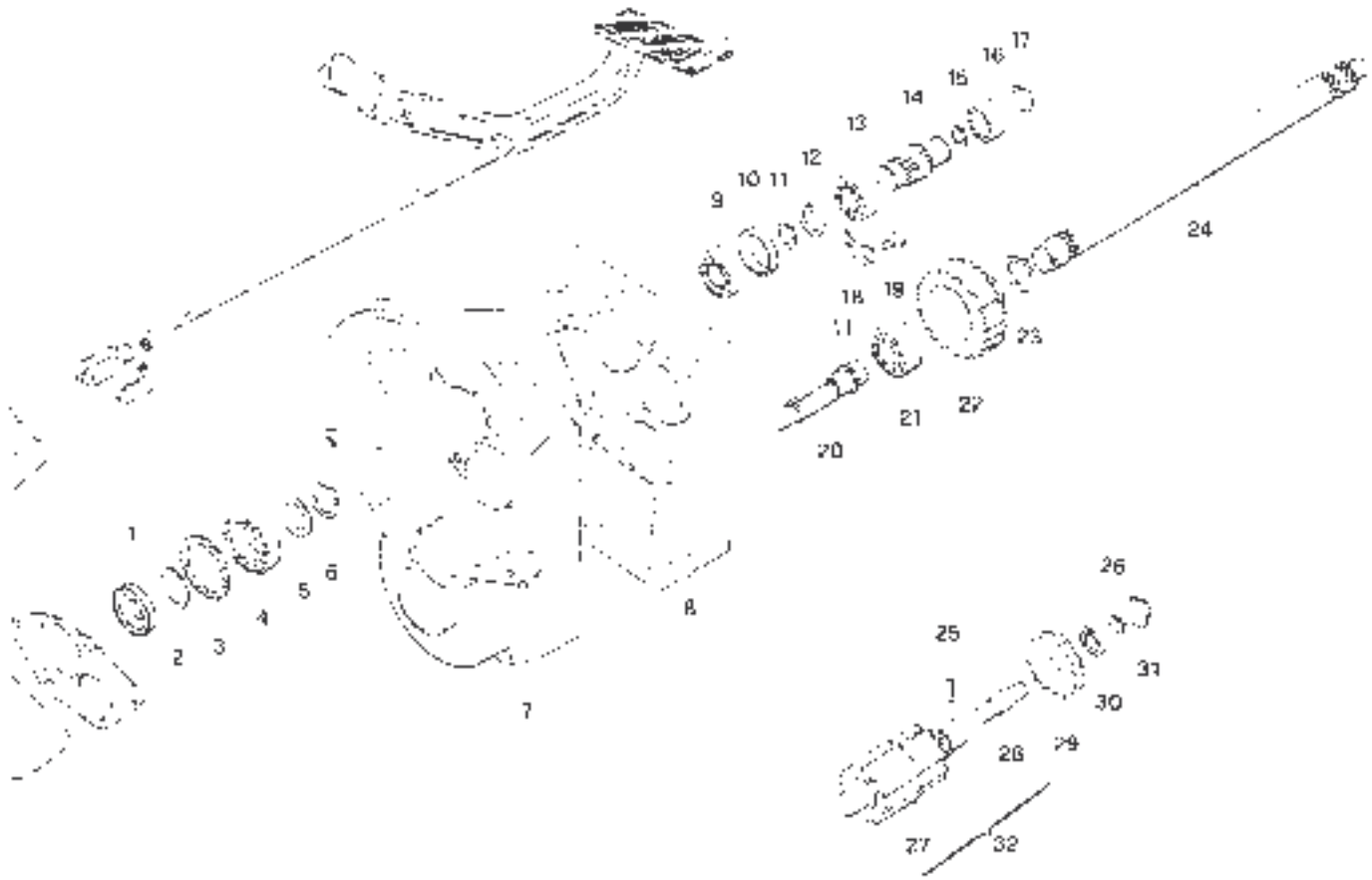

| | No. ORDIN. |
|---|---|
| 1 | 61.2556.000 |
| 2 | 16.0006.216 |
| 3 | 16.0006.205 |
| 4 | 16.0006.219 |
| 5 | 16.0006.206 |
| 6 | 16.0006.205 |
| 7 | 80.1333.000 |
| 8 | 16.0006.106 |
| 9 | 16.0006.106 |
| 10 | 16.0006.106 |
| 11 | 61.2837.000 |
| 12 | 80.0057.050 |
| 13 | 16.0006.251 |
| 14 | 80.1149.000 |
| 15 | 61.4237.060 |
| 16 | 16.0006.100 ○ |
| - | 16.0006.100 ● ◑ |
| 17 | 80.2092.000 |
| 18 | 16.0006.215 |
| 19 | 16.0006.101 ○ |
| | 16.0006.101 ● ◑ |
| 20 | 16.0006.200 |
| 21 | 81.2731.040 |
| 22 | 91.4543.000 |
| 23 | 84.2571.000 |
| 24 | 16.0006.227 |
| 25 | 98.2191.000 |
| 26 | 16.0006.202 |
| 27 | 16.0006.217 |
| 28 | 16.0006.216 |
| 29 | 84.7020.010 |
| 30 | 16.0006.107 |
| 31 | 85.0114.000 (D 2 mm) |
| – | 85.0114.010 (D 3 mm) |
| – | 85.0114.020 (D 5 mm) |
| 32 | 81.2731.030 |
| 33 | 16.0006.103 |
| 34 | 16.0006.102 |
| 35 | 80.1400.030 |

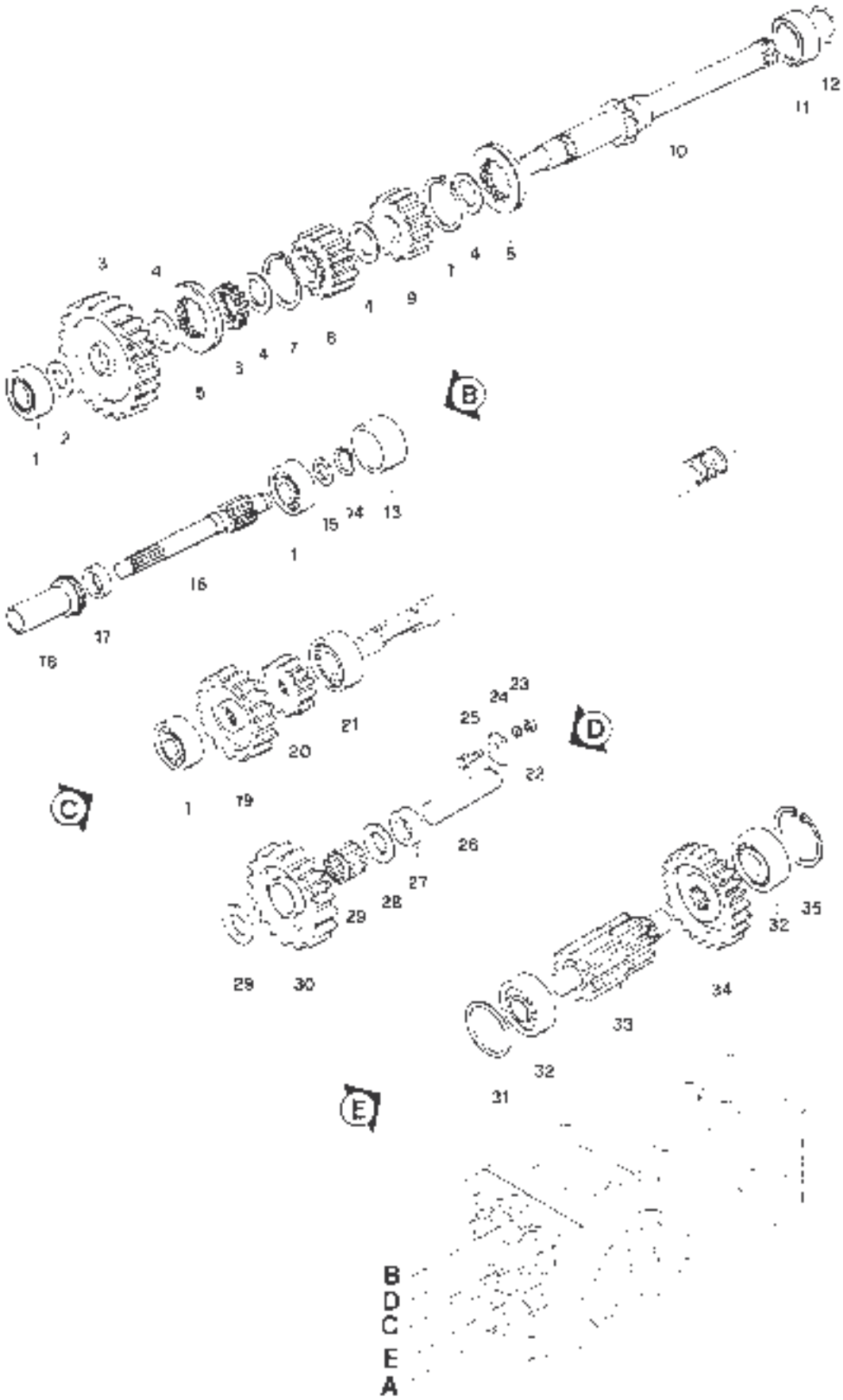

FERRARI

INGRANAGGI CAMBIO (2a PARTE)
(VERSIONE CON INGRANAGGI DIRITTI)
GEAR BOX (2nd PART) (STRAIGHT - TOOTH GEARS)

# 85-86-86RS

14 - 0677

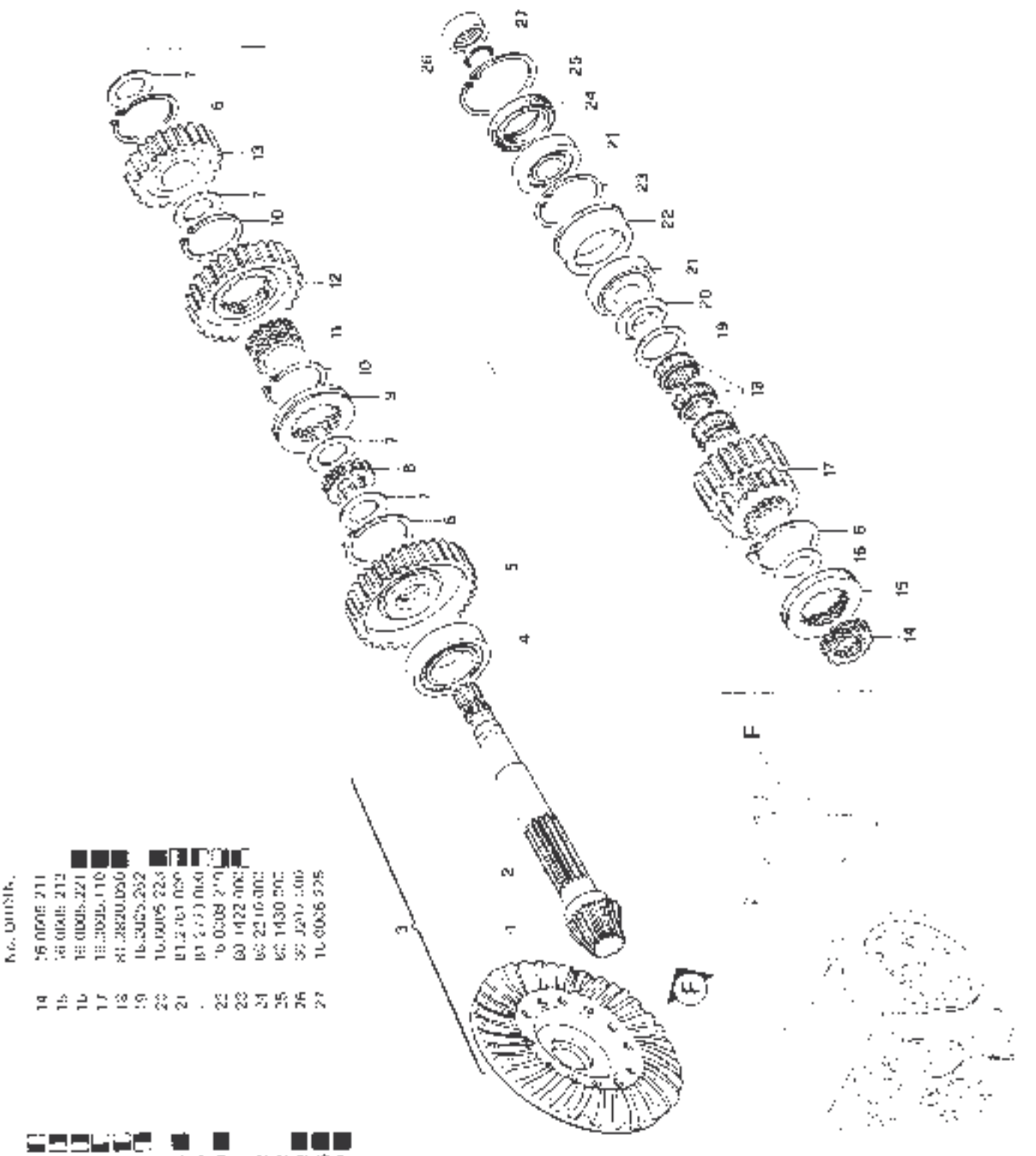

| No. | Codice | Denominazione |
|---|---|---|
| 1 | 16.0010.105 | [illegible] |
| 2 | 16.0010.116 | [illegible] |
| 3 | 16.0005.133 | [illegible] |
| 4 | 16.0005.114 | [illegible] |
| 5 | 16.0005.267 | [illegible] |
| 6 | 16.0006.[illegible] | [illegible] |
| 7 | 01.2959.[illegible] | [illegible] |
| 8 | 16.0006.115 | [illegible] |
| 9 | 82.1382.[illegible] | [illegible] |
| 10 | 16.0005.290 | [illegible] |
| 11 | 16.0006.211 | [illegible] |
| 12 | 16.0006.[illegible] | [illegible] |
| 13 | 00.1388.[illegible] | [illegible] |
| 14 | 16.0006.211 | [illegible] |
| 15 | 16.0006.212 | [illegible] |
| 16 | 16.0006.221 | [illegible] |
| 17 | 16.0006.110 | [illegible] |
| 18 | 82.2820.050 | [illegible] |
| 19 | 16.0005.262 | [illegible] |
| 20 | 16.0006.223 | [illegible] |
| 21 | 01.2761.009 | [illegible] |
| 22 | 01.2761.040 | [illegible] |
| 23 | 16.0006.270 | [illegible] |
| 24 | 00.1422.003 | [illegible] |
| 25 | 00.2210.003 | [illegible] |
| 26 | 00.1430.502 | [illegible] |
| 27 | 00.1201.500 | [illegible] |
| | 16.0006.525 | [illegible] |

Segnalare [illegible]

155.582 155.583

1°306B

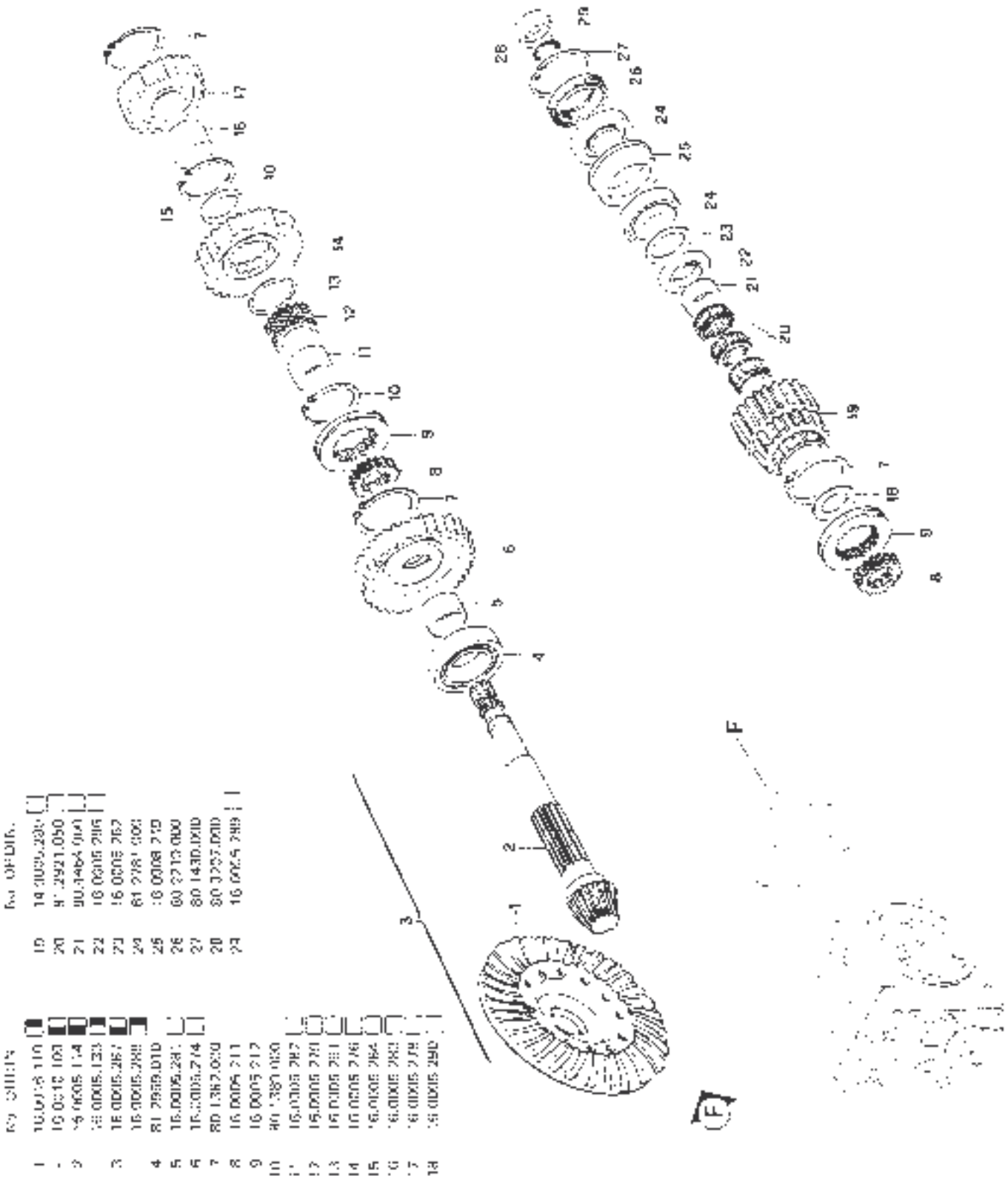

| | No. ORDIN. | |
|---|---|---|
| 1 | 16 0006.201 | |
| 2 | 80 1229.000 | |
| 3 | 16 0006.109 | |
| 4 | 81 2656.000 | |
| 5 | 85 0100.200 | 0,2 mm |
| – | 85 0100.210 | 0,3 mm |
| – | 85 0100.220 | 0,5 mm |
| 6 | 80 1366.300 | |
| 7 | 81 2767.010 | |
| 8 | 16 0006.210 ■ | |
| 9 | 16.0006.209 ■ | |
| 10 | 16 0006.206 ■ | |
| 11 | 80 1400.000 | |
| 12 | 85.0057.200 | 0,2 mm |
| – | 85 0057.210 | 0,3 mm |
| – | 85 0057.220 | 0,5 mm |
| 13 | 16.0006.207 | |
| 14 | 80.1210.000 | |
| 15 | 84.4678.000 | |
| 16 | 81 2731.200 | |
| 17 | 16 0005.111 | |
| 18 | 16 0005.113 | |
| 19 | 16 0005.214 | |
| 20 | 16 0005.112 | |
| 21 | 16 0005.213 | |
| 22 | 81 2780.200 | |
| 23 | 11 0008.225 | |
| 24 | 85 0130.200 | 0,2 mm |
| | 85.0130.210 | 0,3 mm |
| | 85 0130.220 | 0,5 mm |
| 25 | 80 1422.000 | |
| 26 | 80 2727.000 | |

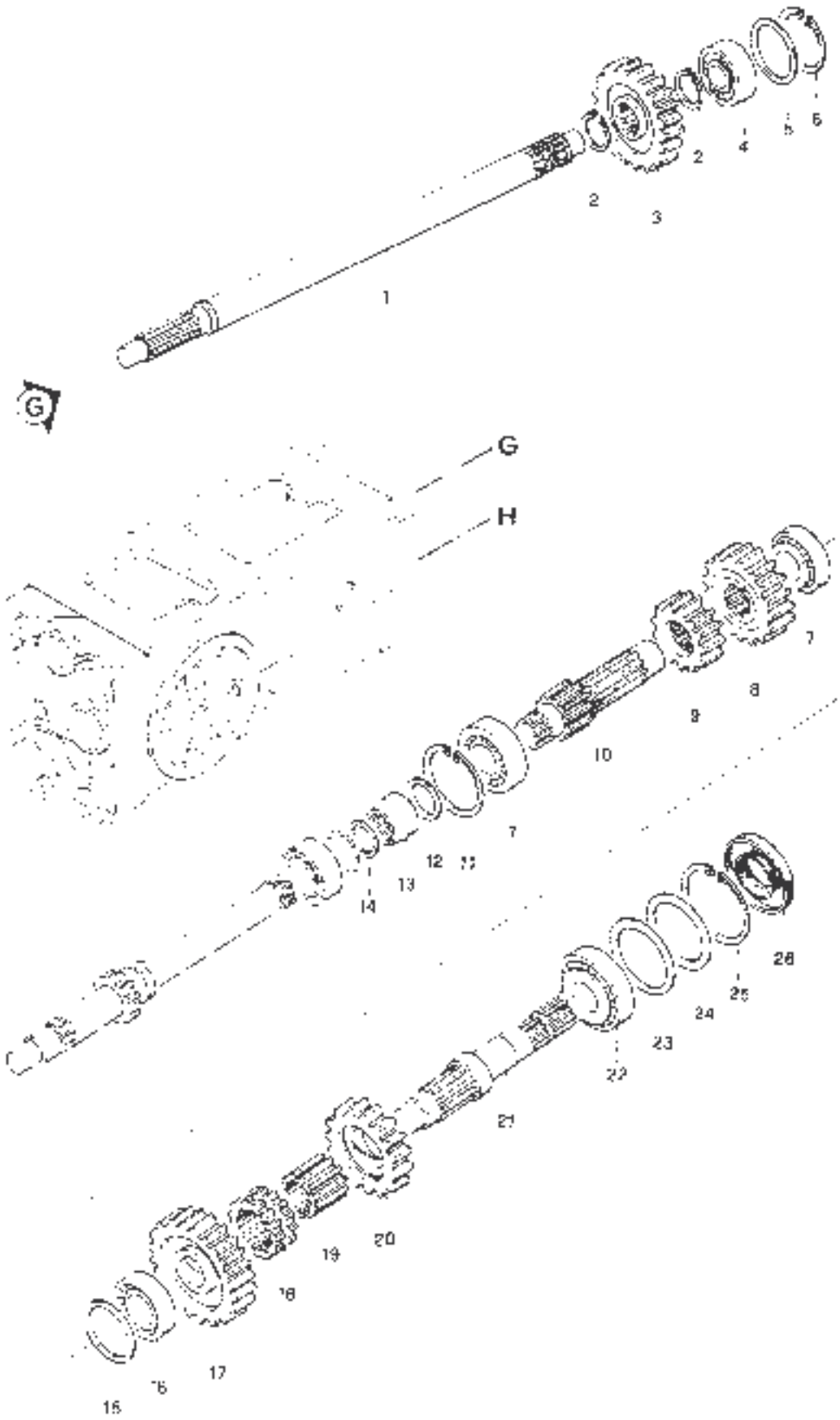

| | No. 0677N |
|---|---|
| 1 | 16.0006.201 |
| 2 | 90.1229.000 |
| 3 | 10.0001.109 |
| 4 | 91.2060.000 |
| 5 | 85.0100.000 (0,2 mm) |
| – | 85.0100.010 (0,3 mm) |
| – | 85.0100.020 (0,5 mm) |
| 6 | 30.1368.000 |
| 7 | 81.2767.010 |
| 8 | 16.0005.277 |
| 9 | 16.0005.275 |
| 10 | 16.0005.273 |
| 11 | 82.1400.000 |
| 12 | 85.0057.000 (0,2 mm) |
| – | 85.0057.010 (0,3 mm) |
| – | 85.0057.020 (0,5 mm) |
| 13 | 16.0005.207 |
| 14 | 90.1710.000 |
| 15 | 94.4576.000 |
| 16 | 91.2731.000 |
| 17 | 16.0005.111 |
| 18 | 16.0005.110 |
| 19 | 16.0005.214 |
| 20 | 16.0005.112 |
| 21 | 16.0005.213 |
| 22 | 81.2780.000 |
| 23 | 11.0009.225 |
| 24 | 85.0130.000 (0,2 mm) |
| | 85.0130.010 (0,3 mm) |
| – | 85.0130.020 (0,5 mm) |
| 25 | 90.1427.000 |
| 26 | 82.0127.010 |

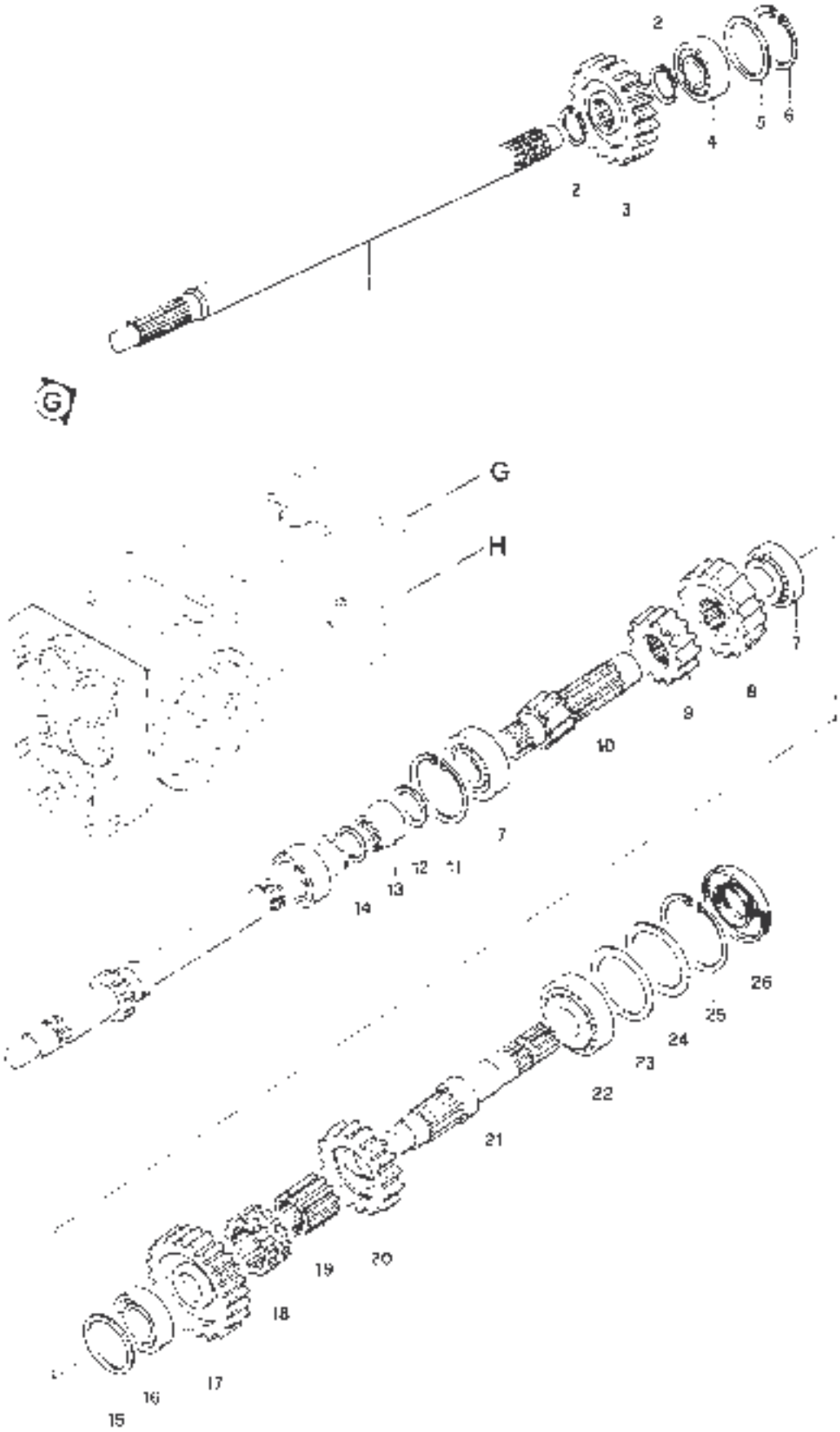

| No | CODIN |
|---|---|
| 1 | 83.7952.200 |
| 2 | 16.0038.900 |
| 3 | 86.2966.200 |
| 4 | 84.3843.050 |
| 5 | 16.0005.214 |
| 6 | 83.1375.010 |
| 7 | 16.0035.210 |
| 8 | 16.0005.120 |
| 9 | 16.0005.900 |
| 10 | 16.0005.202 |
| 11 | 16.0005.250 |
| 12 | 80.3183.050 |
| 13 | 16.0056.278 |
| 14 | 01.0031.319 |
| 15 | 16.0056.243 |
| 16 | 84.7437.000 |
| 17 | 16.0056.252 |
| 18 | 47.1560.048 |
| 19 | 83.1070.000 |
| 20 | 16.0005.231 |

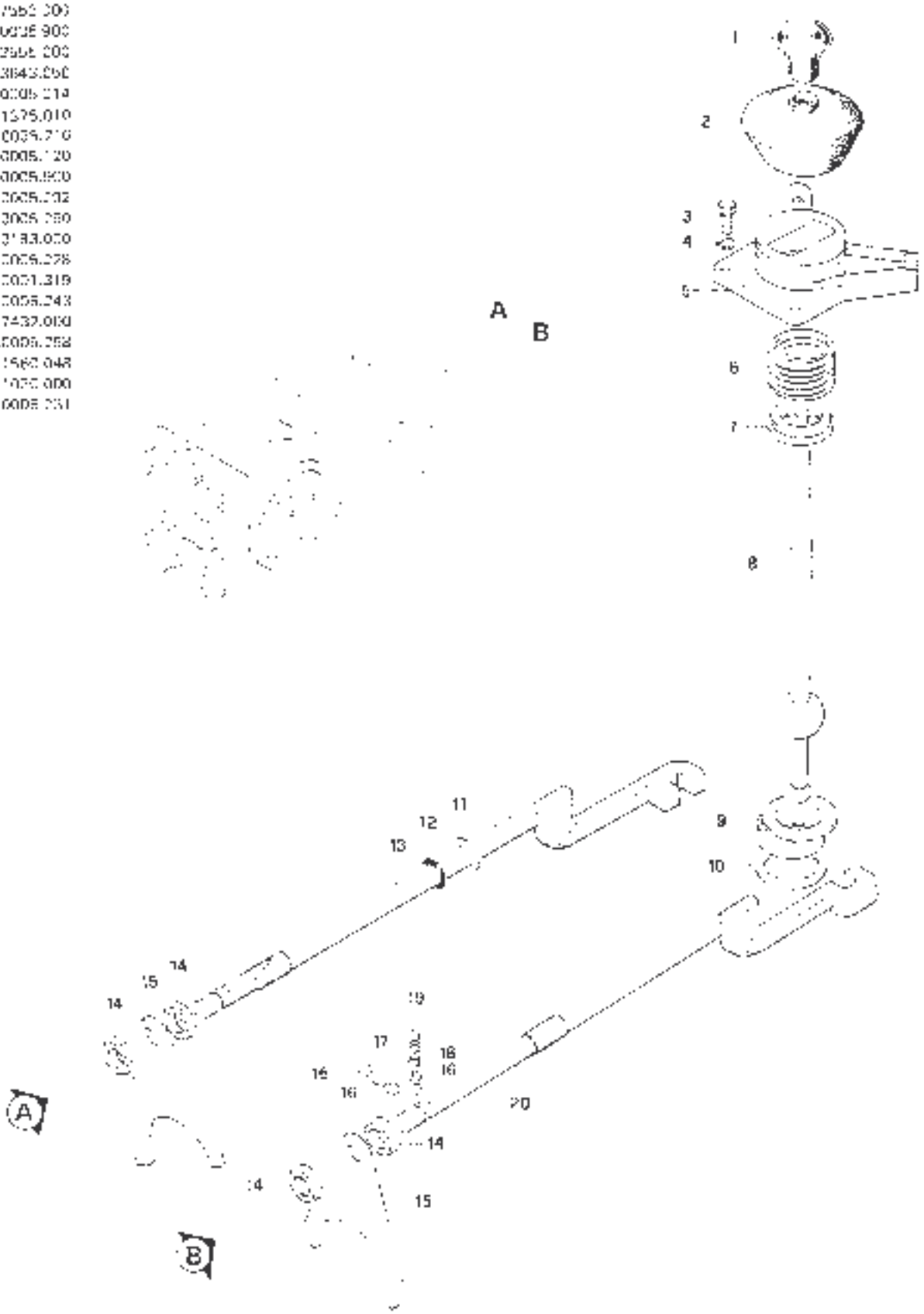

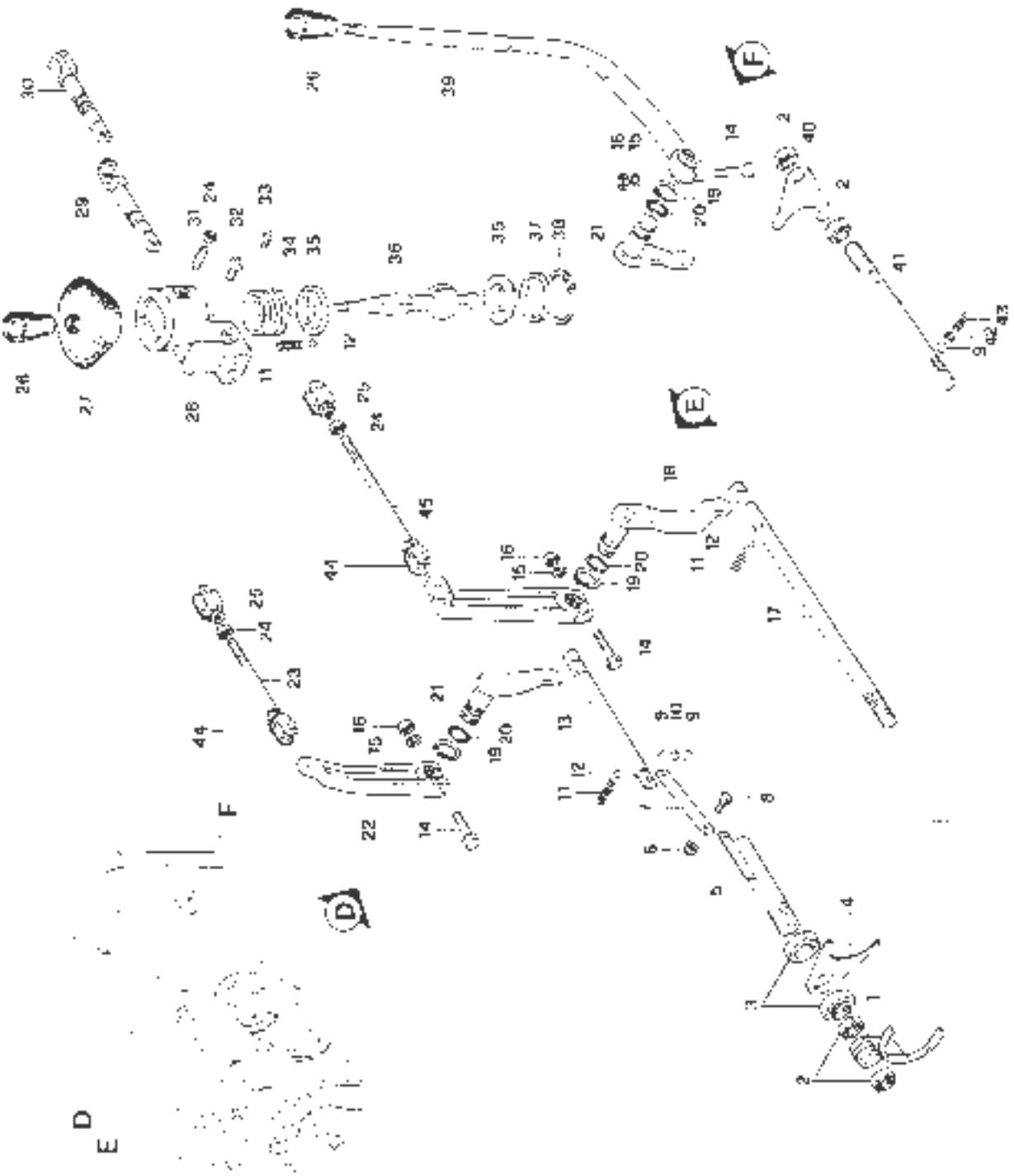

| | | |
|---|---|---|
| 1 | 16.0005.120 | |
| 2 | 01.0001.319 | |
| 3 | 16.0005.251 | |
| 4 | 16.0005.242 | |
| 5 | 16.0005.254 | |
| 6 | 81.4540.000 | |
| 7 | 16.0005.240 | |
| 8 | 85.7159.000 | |
| 9 | 84.7437.000 | |
| 10 | 16.0005.200 | |
| 11 | 83.1107.000 | |
| 12 | 84.7416.000 | |
| 13 | 16.0005.235 | |
| 14 | 86.2916.000 | |
| 15 | 84.3843.000 | |
| 16 | 81.4579.000 | |
| 17 | 16.0005.234 | |
| 18 | 16.0005.265 | |
| 19 | 80.1195.000 | |
| 20 | 80.3072.000 | |
| 21 | 16.0005.264 | |
| 22 | 16.0005.131 | |
| 23 | 16.0005.253 | |
| 24 | 81.4573.000 | |
| 25 | 86.0000.000 | |
| 26 | 83.7837.000 | |
| 27 | 95.0036.900 | |
| 28 | 16.0505.016 | |
| 29 | 16.0505.128 | |
| 30 | 16.0505.127 | |
| 31 | 86.7685.000 | |
| 32 | 80.3172.000 | |
| 33 | 82.8016.000 | |
| 34 | 82.1375.000 | |
| 35 | 16.0005.216 | |
| 36 | 16.0005.129 | |
| 37 | 16.0005.252 | |
| 38 | 80.1368.000 | |
| 39 | 16.0005.121 | |
| 40 | 16.0005.244 | |
| 41 | 16.0005.236 | |
| 42 | 47.1560.048 | |
| 43 | 83.1120.000 | |
| 44 | 80.0058.020 | |
| 45 | 16.0005.255 | |

T.P.S. 4-105

| | No. ORDIN. | | No. ORDIN. | | No. ORDIN. | | No. ORDIN. |
|---|---|---|---|---|---|---|---|
| 1 | 81.4643.000 | 14 | 16.0010.236 | 26 | 16.0010.012 | 42 | 85.1367.010 |
| 2 | 84.3755.050 | 15 | 16.0010.221 | 27 | 61.2838.000 | 41 | 11.0011.209 |
| 3 | 11.0011.107 | 16 | 90.0064.020 | 28 | 90.1430.000 | 42 | 86.0030.050 |
| 4 | 11.0013.207 | 17 | 81.2973.000 | 29 | 90.7239.062 | 43 | 65.7256.090 |
| 5 | 65.3452.000 | 18 | 95.0160.000 (0,2 mm) | 30 | 90.1207.000 | 44 | 86.6486.030 |
| 6 | 16.0010.113 | - | 95.0161.000 (0,3 mm) | 31 | 16.0010.108 | 45 | 16.0010.209 |
| – | 16.0010.100 | – | 95.0162.000 (0,5 mm) | 32 | 84.3821.020 | | |
| 7 | 16.0010.205 | 19 | 83.1423.000 | 33 | 86.4192.000 | | |
| 8 | 16.0010.105 | 20 | 16.0010.102 | 34 | 31.0001.078 | | |
| 9 | 16.0010.202 | 21 | 16.0010.108 | 35 | 31.0001.079 | | |
| 10 | 16.0010.104 | 22 | 02.0010.902 | 36 | 16.0010.109 | | |
| 11 | 16.0010.204 | 23 | 84.3755.050 | 37 | 85.1191.000 | | |
| 12 | 16.0010.200 | 24 | 08.3822.000 | 38 | 85.1056.000 | | |
| 13 | 16.0010.103 | 25 | 16.0010.203 | 39 | 11.0011.207 | | |

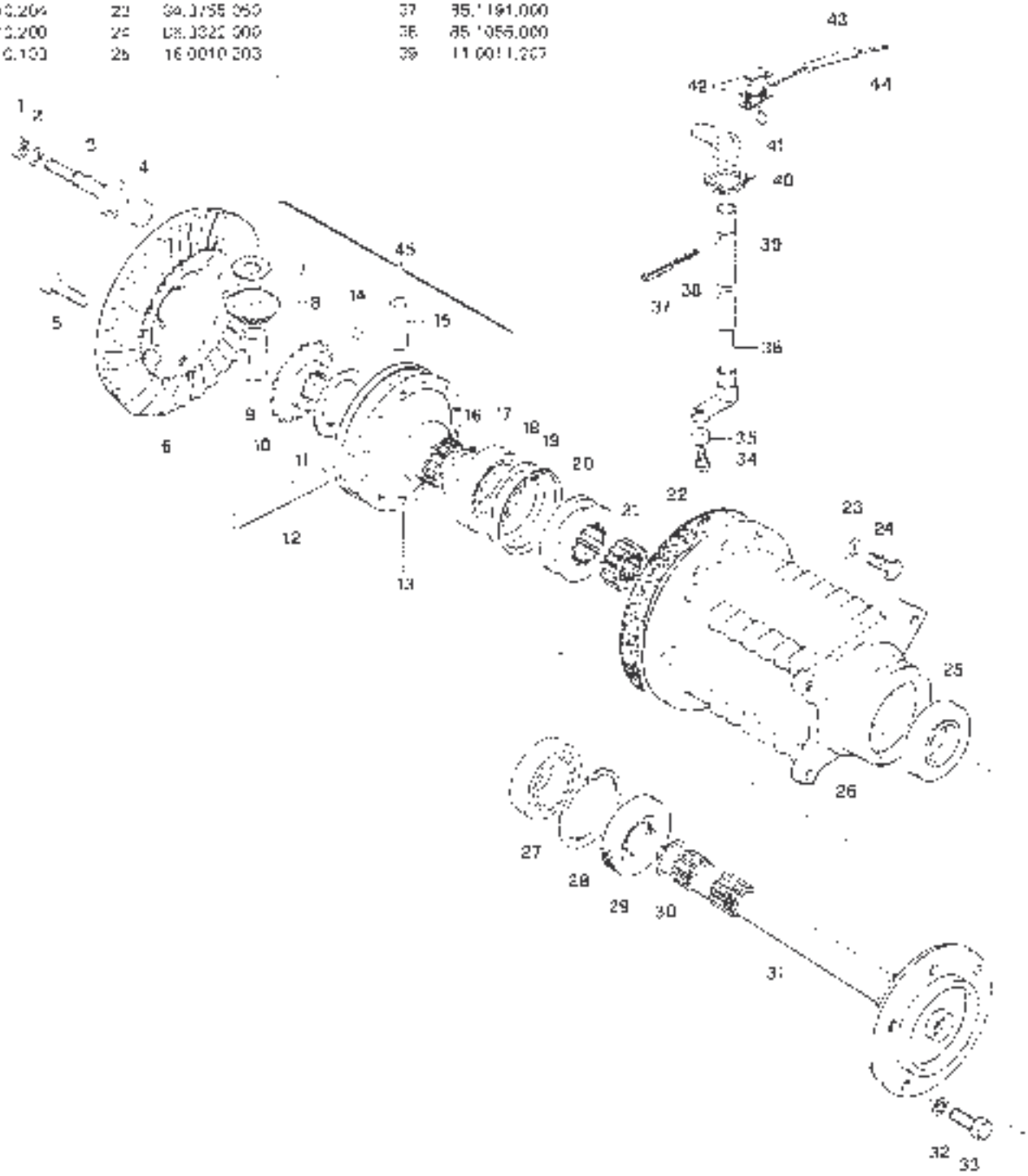

| | No. ORDIN. | | | No. ORDIN. | | | No. ORDIN. | |
|---|---|---|---|---|---|---|---|---|
| 1 | 85.2755.000 | | 21 | 16.0008.220 | | 37 | 85.0114.000 | 0.2 mm |
| 2 | 85.1369.000 | | 22 | 81.2670.000 | | | 85.0114.010 | +0.2 mm |
| 3 | 81.2655.000 | | 23 | 16.0008.219 | | – | 85.0114.020 | +0.5 mm |
| 4 | 16.0008.204 | | 24 | 81.2781.000 | | 38 | 81.2757.000 | |
| 5 | 16.0008.210 | | 25 | 80.1430.050 | | 39 | 16.0008.212 | |
| 6 | 81.2669.000 | | 26 | 80.2210.050 | | 40 | 16.0008.206 | |
| 7 | 85.0140.000 | 0.2 mm | 27 | 80.3257.050 | | 41 | 16.0008.209 | |
| | 85.0140.010 | +0.3 mm | 28 | 16.0005.275 | ☐ | 42 | 16.0008.211 | |
| | 85.0140.020 | +0.5 mm | – | 16.0005.299 | ■ | 43 | 81.2646.000 | |
| 8 | 80.1426.000 | | 29 | 82.8471.000 | | 44 | 80.1422.000 | |
| 9 | 16.0008.102 | ☐ | 30 | 16.0008.102 | | 45 | 80.2162.000 | |
| – | 16.0008.101 | ■ | 31 | 86.2259.000 | | | | |
| 10 | 81.2858.000 | | 32 | 84.0571.000 | | | | |
| 11 | 16.0008.221 | | 33 | 81.4543.000 | | | | |
| 12 | 16.0008.225 | | 34 | 80.2125.050 | | | | |
| 13 | 16.0008.214 | | 35 | 80.1400.000 | | | | |
| 14 | 80.3217.040 | | 36 | 16.0008.213 | | | | |
| 15 | 16.0008.208 | | | | | | | |
| 16 | 84.7416.000 | | | | | | | |
| 17 | 85.1052.000 | | | | | | | |
| 18 | 16.0008.207 | | | | | | | |
| 19 | 81.2922.000 | | | | | | | |
| 20 | 16.0008.205 | | | | | | | |

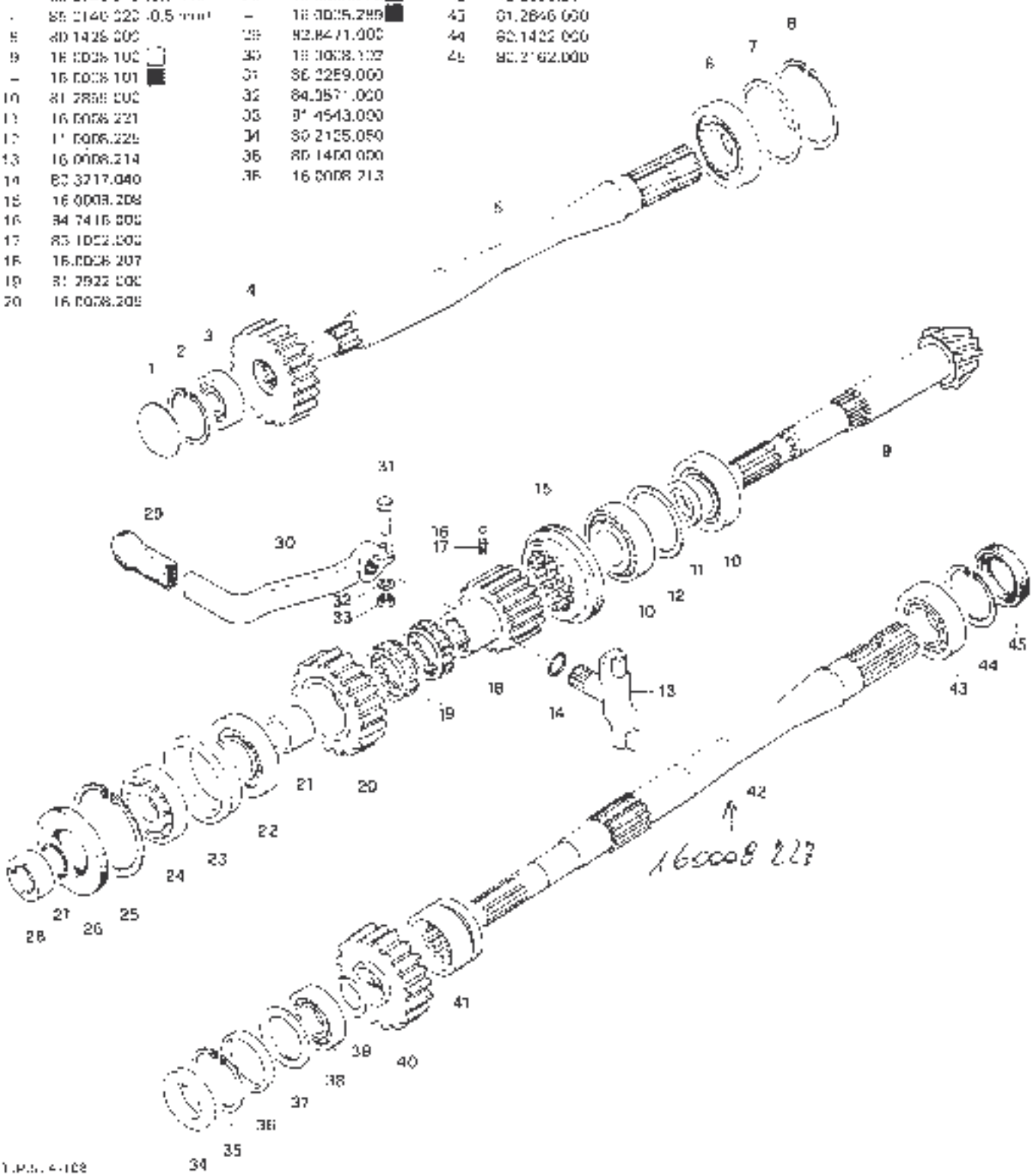

| | No. ORDIN. | | No. ORDIN. | | No. ORDIN. |
|---|---|---|---|---|---|
| 1 | 80.0564.000 | 16 | 80.2452.000 | 30 | 16.0010.203 |
| 2 | 16.0010.103 | 17 | 81.2973.000 | 31 | 81.2959.000 |
| 3 | 16.0010.204 | 18 | 85.0180.000 (0,2 mm) | 32 | 80.1430.000 |
| 4 | 16.0010.104 | – | 85.0181.000 (0,3 mm) | 33 | 80.2781.000 |
| 5 | 16.0010.202 | – | 85.0182.000 (0,5 mm) | 34 | 80.1257.000 |
| 6 | 16.0010.209 | 19 | 80.1403.000 | 35 | 16.0010.106 |
| 7 | 16.0010.201 | 20 | 16.0010.102 | 36 | 64.3871.020 |
| 8 | 16.0010.200 | 21 | 16.0010.108 | 37 | 85.4107.000 |
| 9 | 16.0010.205 | 22 | 80.1346.000 | | |
| 10 | 16.0010.105 | 23 | 16.0010.201 | | |
| 11 | 11.0012.207 | 24 | 80.1130.000 | | |
| 12 | 11.0011.107 | 25 | 21.0001.079 | | |
| 13 | 84.3765.050 | 26 | 21.2001.078 | | |
| 14 | 81.4843.000 | 27 | 82.2010.502 | | |
| 15 | 16.0010.101 | 28 | 16.0010.010 | | |
| – | 16.0010.100 ■ | 29 | 86.0322.000 | | |

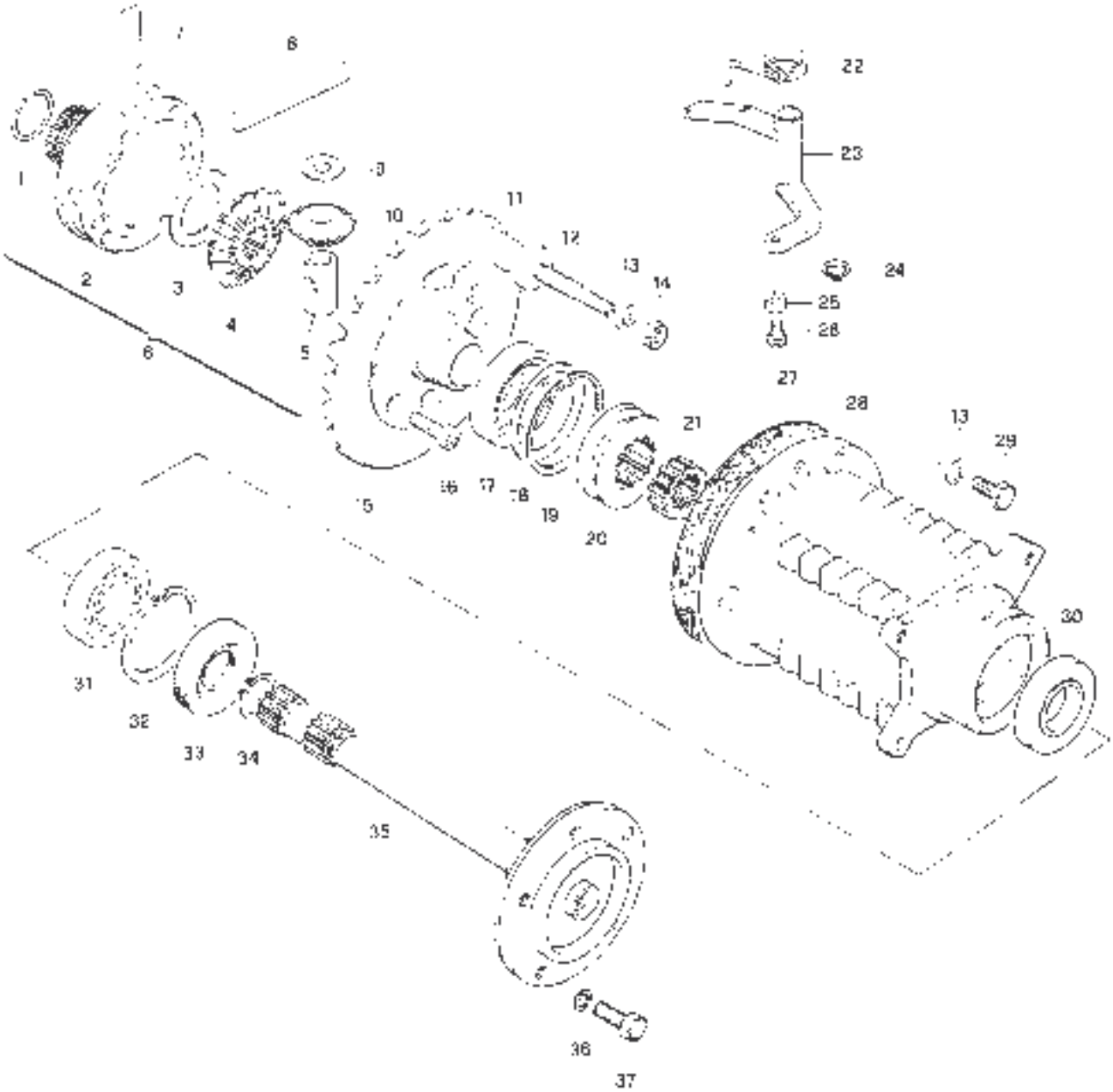

FERRARI

SCATOLA CENTRALE
*INTERMEDIATE HOUSING*
CARTER MEDIAN
*MITTELGEHÄUSE*
CAJA INTERMEDIA

○ ● **85-86**

| 1a - 0677 | 2a - 0278 |
|---|---|

| No. ORD. N. / PART No. / No. ORD. A. / BESTELL No. / No. PEDIDO A. | |
|---|---|
| 1 | 82.1070.000 |
| 2 | 16.0012.202 |
| 3 | 81.3000.000 |
| 4 | 85.0133.000 |
| 5 | 16.0012.201 |
| 6 | 81.4767.000 |
| 7 | 84.4064.000 |
| 8 | 83.8746.000 |
| 9 | 16.0012.010 |
| 10 | 84.3642.050 |
| 11 | 85.2962.000 |
| 12 | 16.0012.211 |
| 13 | 16.0012.212 |
| 14 | 16.0012.213 |
| 15 | 82.6216.000 |
| 16 | 80.1232.000 |
| 17 | 16.0012.203 |
| 18 | 16.0012.218 |
| 19 | 80.1175.000 |
| 20 | 82.6041.000 |
| 21 | 16.0012.219 |
| 22 | 16.0012.217 |
| 23 | 82.6042.000 |
| 24 | 16.0012.216 |
| 25 | 16.0012.204 |
| 26 | 81.4317.000 |
| 27 | 84.4454.000 |
| 28 | 85.0057.040 |
| 29 | 81.2777.000 |
| 30 | 80.1422.000 |
| 31 | 16.0012.200 |
| 32 | 85.2797.000 |
| 33 | 16.0012.013 |
| 34 | 80.2291.000 |
| 35 | 16.0012.102 |
| 36 | 16.0012.101 |
| 37 | 16.0012.100 |
| 38 | 84.7470.050 |
| 39 | 82.6038.000 |
| 40 | 86.2590.000 |
| 41 | 91.4570.010 |
| 42 | 91.2849.000 |
| 43 | 16.0012.205 |
| 44 | 80.1400.000 ○ ■ |
| – | 80.1400.050 ● |
| 45 | 81.2636.000 |
| 46 | 16.0012.206 |
| 47 | 16.0012.012 |
| 48 | 86.4296.050 |
| 49 | 84.0921.020 |
| 50 | 86.4037.000 ○ |
| – | 86.4012.000 ○ ■ |
| | 86.4012.000 ● |
| 51 | 16.0012.214 |
| 52 | 16.0012.220 ○ ■ |
| – | 16.0012.220 ● |
| 53 | 16.0012.221 ○ ■ |
| – | 16.0012.221 ● |
| 54 | 80.1308.000 ○ ■ |
| | 80.1308.000 ● |
| 55 | 86.2853.000 ○ |
| 56 | 84.2643.050 ○ |

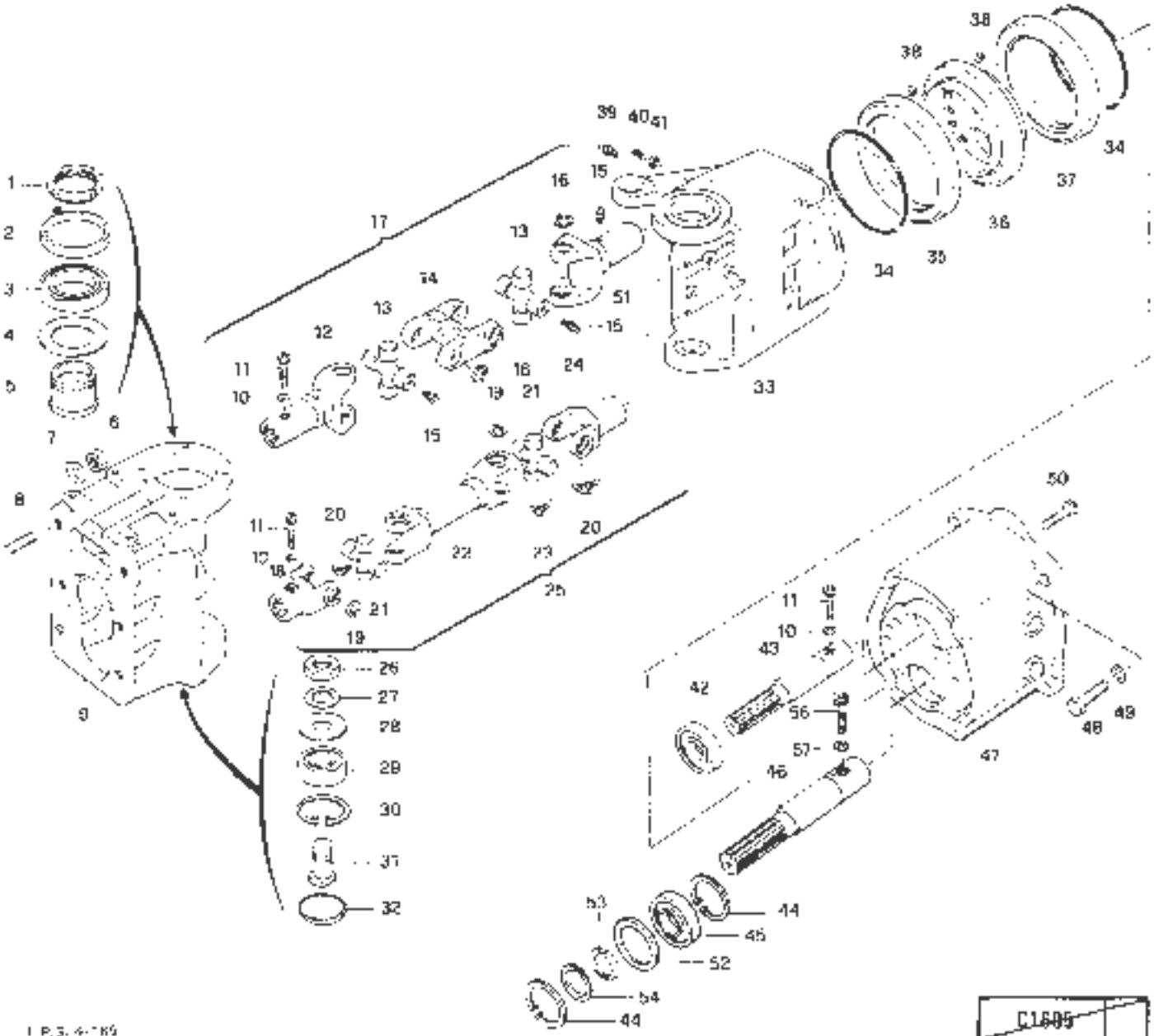

T.P.S. 4-'89

■ 161.940 ■ 161.941

| C1605 | |
|---|---|
| C1605 | 1 |

| | No. ORIGIN. |
|---|---|
| 1 | 16.0008.223 |
| 2 | 80.3057.050 |
| 3 | 15.0008.212 |
| 4 | 85.2628.000 |
| 5 | 55.3512.000 |
| 6 | 86.3703.000 |
| 7 | 16.0208.000 |
| 8 | 16.0008.217 |
| 9 | 16.0008.228 |
| 10 | 09.0011.912 |

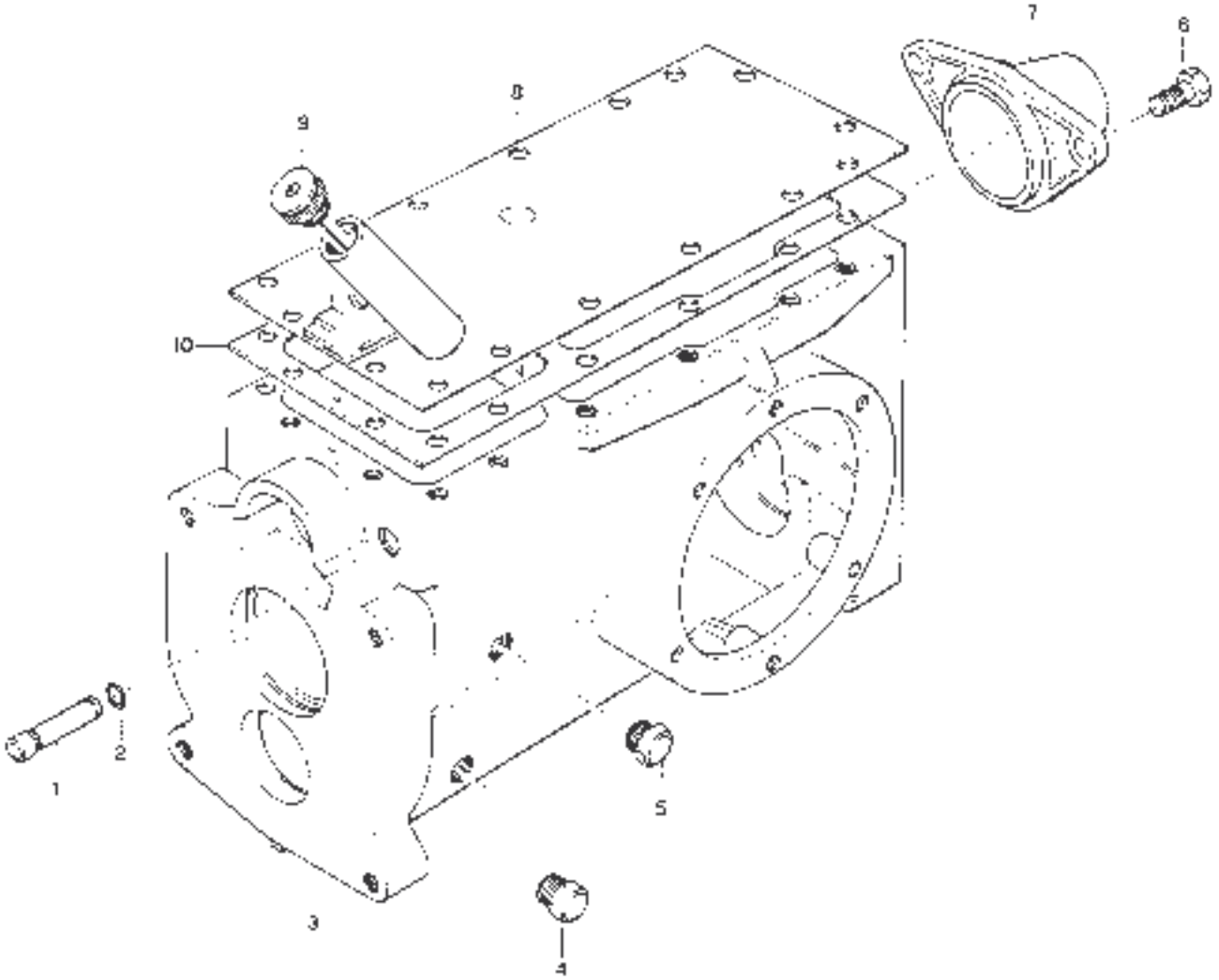

FERRARI

FRENI IDRAULICI ANTERIORI
FRONT HYDRAULIC BRAKES
FREINS HYDRAULIQUES ANTERIEURS
VORDERE HYDRAULISCHE BREMSEN

# 75RS-85-86

1a-0177 2a-0677

| No. | Codice | No. | Codice | No. | Codice |
|---|---|---|---|---|---|
| 1 | 11.0021.915 | 46 | 86.0091.500 | 50 | 80.1235.000 |
| 2 | 11.0021.279 | -- | 86.0000.000 | -- | 82.1235.000 |
| 3 | 80.3253.000 | 47 | 82.6040.000 | 51 | 86.3153.000 |
| 4 | 81.7505.000 | 48 | 85.1267.000 | | 86.3153.050 |
| 5 | 11.0021.902 | | 85.1267.000 | 52 | 84.3817.000 |
| 6 | 11.0021.903 | 49 | 16.0032.259 | | 84.3817.000 |
| 7 | 16.0022.901 | | 16.0032.219 | 53 | 11.0032.411 |
| - | 11.0021.905 | | 11.0032.410 | 54 | 80.1139.000 |
| - | 16.0021.902 | - | 11.0032.454 | - | 80.1139.000 |
| - | 16.0021.926 | | 16.0032.259 | 55 | 11.0032.412 |
| 8 | 86.2100.000 | | | 56 | 82.3140.000 |
| 9 | 84.3570.000 | | | | |
| 10 | 81.4780.000 | | | | |
| 11 | 11.0021.269 | | | | |
| 12 | 11.0021.204 | | | | |
| 13 | 84.3102.000 | | | | |
| 14 | 84.3771.000 | | | | |
| 15 | 82.3143.005 | | | | |
| 16 | 85.3584.000 | | | | |
| 17 | 85.3570.000 | | | | |
| - | 86.3358.000 | | | | |
| 18 | 87.3140.002 | | | | |
| 19 | 87.3140.004 | | | | |
| 20 | 87.3140.007 | | | | |
| 21 | 87.3140.008 | | | | |
| 22 | 87.3140.001 | | | | |
| 23 | 87.3140.008 | | | | |
| 24 | 87.3140.002 | | | | |
| 25 | 87.3140.010 = 86.0091.440 | | | | |
| 26 | 82.3875.000 | | | | |
| 27 | 84.3994.000 | | | | |
| 28 | 86.4152.000 | | | | |
| 29 | 82.6806.000 | | | | |
| - | 82.6807.000 | | | | |
| | 82.6806.000 | | | | |
| 30 | 82.5423.020 | | | | |
| 31 | 11.0021.907 | | | | |
| | 16.0021.900 | | | | |
| - | 11.0021.907 | | | | |
| 32 | 84.3798.000 | | | | |
| 33 | 86.3448.000 | | | | |
| 34 | 16.0021.925 | | | | |
| - | 16.0021.901 | | | | |
| - | 11.0021.908 | | | | |
| | 16.0022.900 | | | | |
| 35 | 11.0026.263 | | | | |
| | 16.0021.928 | | | | |
| - | 11.0026.263 | | | | |
| 36 | 80.7102.050 | | | | |
| - | 80.7103.050 | | | | |
| - | 80.7102.000 | | | | |
| 37 | 80.7102.020 | | | | |
| 38 | 80.7102.030 | | | | |
| 39 | 81.7505.000 | | | | |
| 40 | 11.0021.906 | | | | |
| 41 | 11.0021.278 | | | | |
| - | 16.0021.200 | | | | |
| 42 | 16.0021.923 | | | | |
| - | 11.0021.910 | | | | |
| - | 16.0021.903 | | | | |
| - | 16.0021.923 | | | | |
| 43 | 86.0091.020 | | | | |
| - | 86.0090.020 | | | | |
| 44 | 81.4643.000 | | | | |
| 45 | 86.0091.010 | | | | |
| - | 86.0090.010 | | | | |

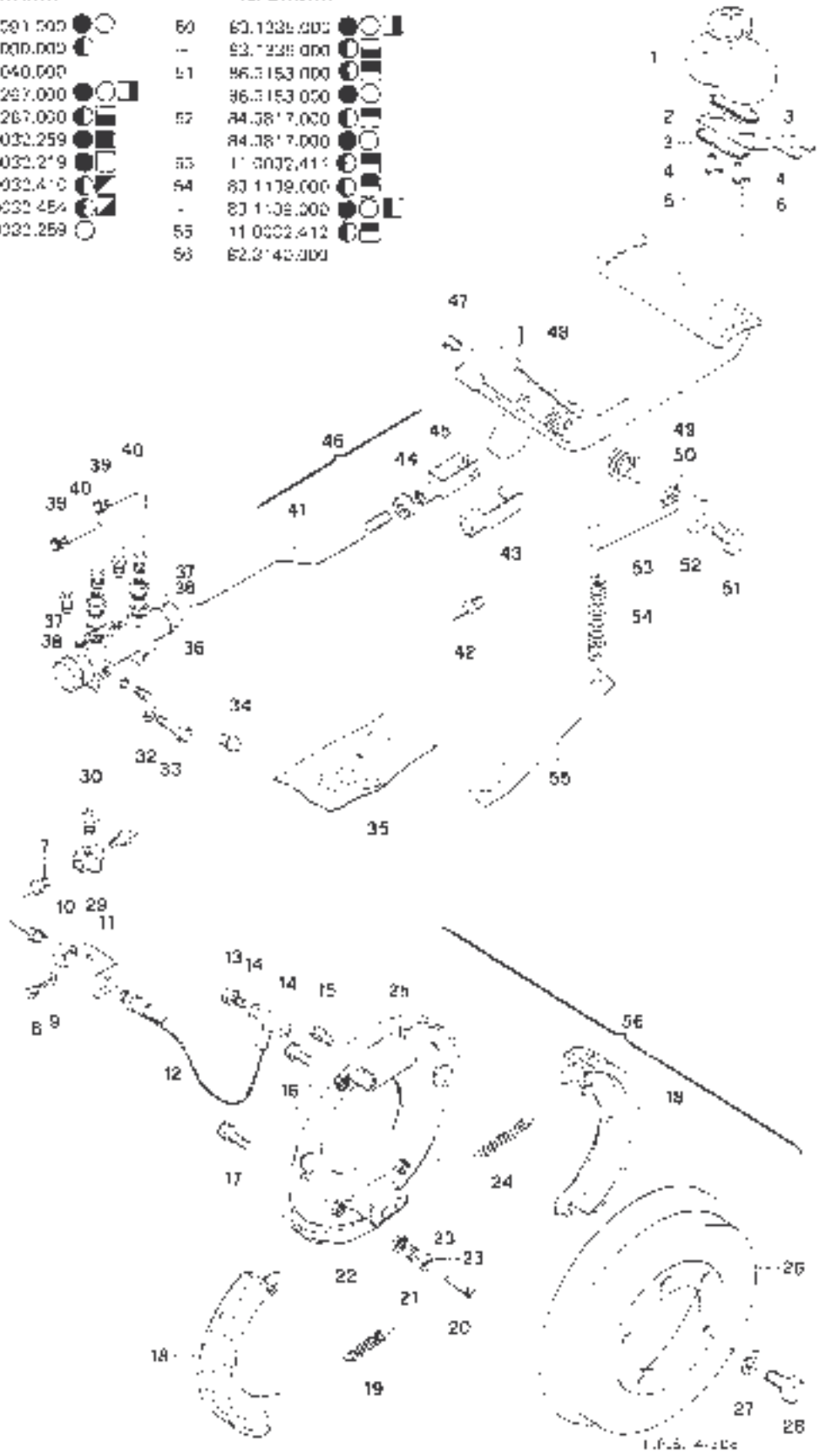

C2107A

C2107A 1

FERRARI

FRENI IDRAULICI POSTERIORI
REAR HYDRAULIC BRAKES
FREINS HYDRAULIQUES ARRIÈRES
HINTERE HYDRAULISCHE BREMSEN

# 75RS - 85 - 86

| | |
|---|---|
| 1-0177 | 2a-0677 |

| | No. FERRARI | | No. OEM N. |
|---|---|---|---|
| 1 | 86 2155 000 | 27 | 82 3140 002 |
| 2 | 84 3640 060 ●○ | 28 | 82.3140 004 |
| – | 84 3667.000 ◐ | 29 | 82.3140 006 |
| 3 | 82 3250.000 | 30 | 82.3140 008 |
| 4 | 81 4824 000 | 31 | 82.3140 007 |
| 5 | 86.8225.000 | 32 | 82.3875 000 |
| 6 | 85.5173 000 | 33 | 84 3054 000 |
| 7 | 86.1932 000 | 34 | 86.4182 000 |
| 8 | 84.3561 000 | 35 | 81 3141 002 ↓ |
| 9 | 11.0029 284 | – | 81 3141.004 ↓ |
| 10 | 82.3140.011 | 36 | 82 3141.008 |
| 11 | 82 3140.012 | 37 | 82 3141.002 ↓ |
| 12 | 82 3140.013 | – | 82 3141.006 ↓ |
| 13 | 82 3140.017 | 38 | 82 3140.003 |
| 14 | 16 0022.802 ○ | 39 | 80 1050 300 |
| – | 16 0021 905 ● | | |
| – | 11 0021 912 ◐ | | |
| 15 | 86 2755 000 | | |
| 16 | 82 5805 000 | | |
| 17 | 11 0021 910 ◐ | | |
| – | 16.0021 906 ● | | |
| – | 16 0022 903 ○ | | |
| 18 | 11 0021 317 | | |
| 19 | 81 4780 000 | | |
| 20 | 84 4051 000 | | |
| 21 | 16.0021 924 ○ | | |
| – | 16 0021 924 ●■ | | |
| – | 16 0021 904 ● | | |
| – | 11 0021.925 ◐ | | |
| 22 | 86 3358 000 | | |
| 23 | 84 3755.060 | | |
| 24 | 82 3140.005 | | |
| 25 | 82.3141.008 ↓ | | |
| – | 82.3142.005 ↓ | | |
| 26 | 82.3141 301 ↓ | | |
| | 82.3141 307 ↓ | | |

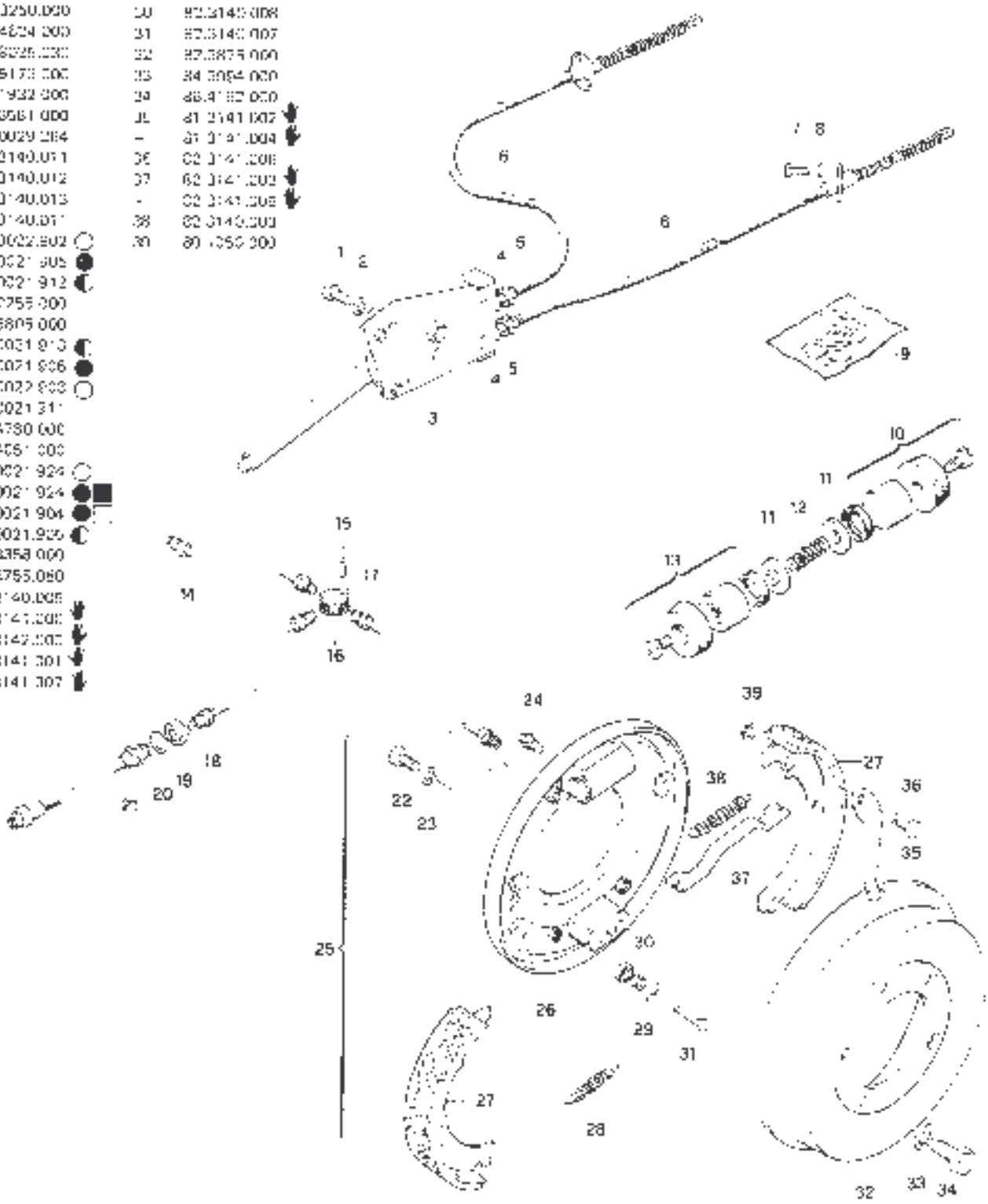

T.P.S. 4-86

C2107B

C2107B

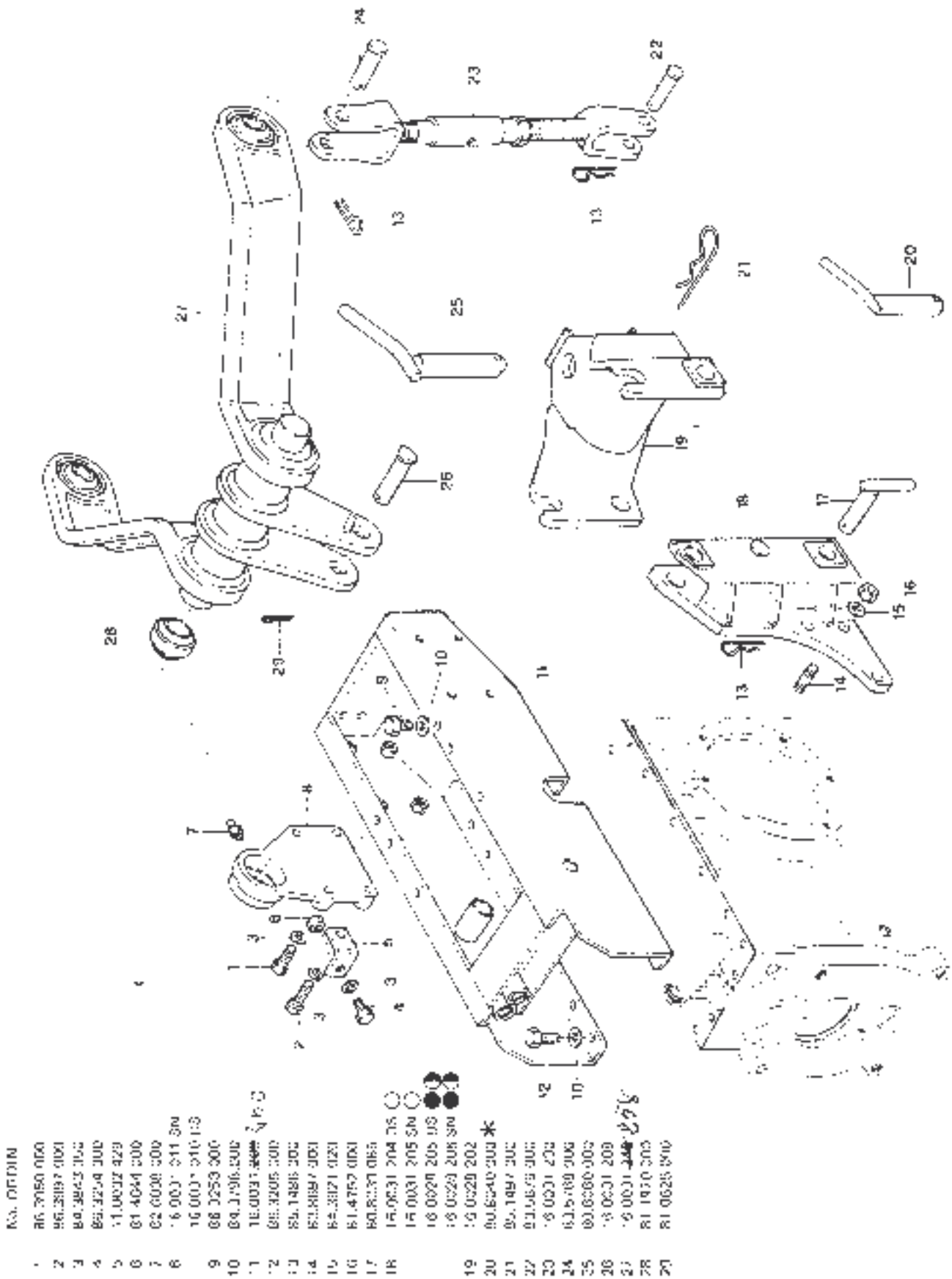

| | | |
|---|---|---|
| 1 | 86.3950.000 | |
| 2 | 96.3897.001 | |
| 3 | 80.3843.000 | |
| 4 | 86.3204.300 | |
| 5 | 11.0032.429 | |
| 6 | 01.4044.000 | |
| 7 | 02.6008.000 | |
| 8 | 16.0031.211.SN | |
| 9 | 16.0031.210.US | |
| 10 | 08.3253.300 | |
| 11 | 84.3796.500 | |
| 12 | 16.0031.[illegible] | ○ |
| 13 | 86.3205.300 | |
| 14 | 85.1486.300 | |
| 15 | 83.3897.001 | |
| 16 | 84.3871.021 | |
| 17 | 81.4752.001 | |
| 18 | 80.8137.065 | |
| 19 | 16.0031.204.US | ○ |
| 20 | 16.0031.205.SN | ○ |
| 21 | 16.0020.205.US | ●● |
| 22 | 16.0020.205.SN | ●● |
| 23 | 16.0020.202 | |
| 24 | 80.6340.300 | * |
| 25 | 85.1497.300 | |
| 26 | 83.5679.300 | |
| 27 | 16.0031.202 | |
| 28 | 83.5789.300 | |
| 29 | 83.6080.300 | |
| 30 | 16.0031.209 | |
| 31 | 16.0031.[illegible] | ○ |
| 32 | 81.1930.300 | |
| 33 | 81.0625.900 | |

T.P.S. 4-108

Segnalazioni di rivalsa

* A RICHIESTA

C2206A

FERRARI

ATTACCO SOLLEVATORE A TRE PUNTI
*IMPLEMENT LIFTER - THREE POINT HITCH*

# 85-86-86RS

1a - 0677

| | No. ORDIN. |
|---|---|
| 1 | 16.0031.234 |
| 2 | 85.0300.000 |
| 3 | 16.0031.255 |
| 4 | 86.0700.000 |
| 5 | 85.1466.000 |
| 6 | 11.0028.211 |
| 7 | 80.6709.000 |
| 8 | 16.0031.241 DS ○ |
| | 16.0031.242 SN ○ |
| | 16.0028.200 DS ●◑ |
| | 16.0028.201 SN ●◑ |
| 9 | 81.4704.000 ○ |
| 10 | 80.9039.095 |
| 11 | 16.0031.225 DS ○ |
| — | 16.0031.221 SN ○ |
| — | 16.0028.212 ●◑ |
| 12 | 61.4838.000 |
| 13 | 11.0031.253 |
| 14 | 80.9039.075 |
| 15 | 16.0028.210 DS ●◑ |
| — | 16.0028.211 SN ●◑ |
| — | 16.0031.200 DS ○ |
| — | 16.0031.201 SN ○ |
| 16 | 84.3543.060 |
| 17 | 86.4172.020 |
| 18 | 86.4172.030 ○ |

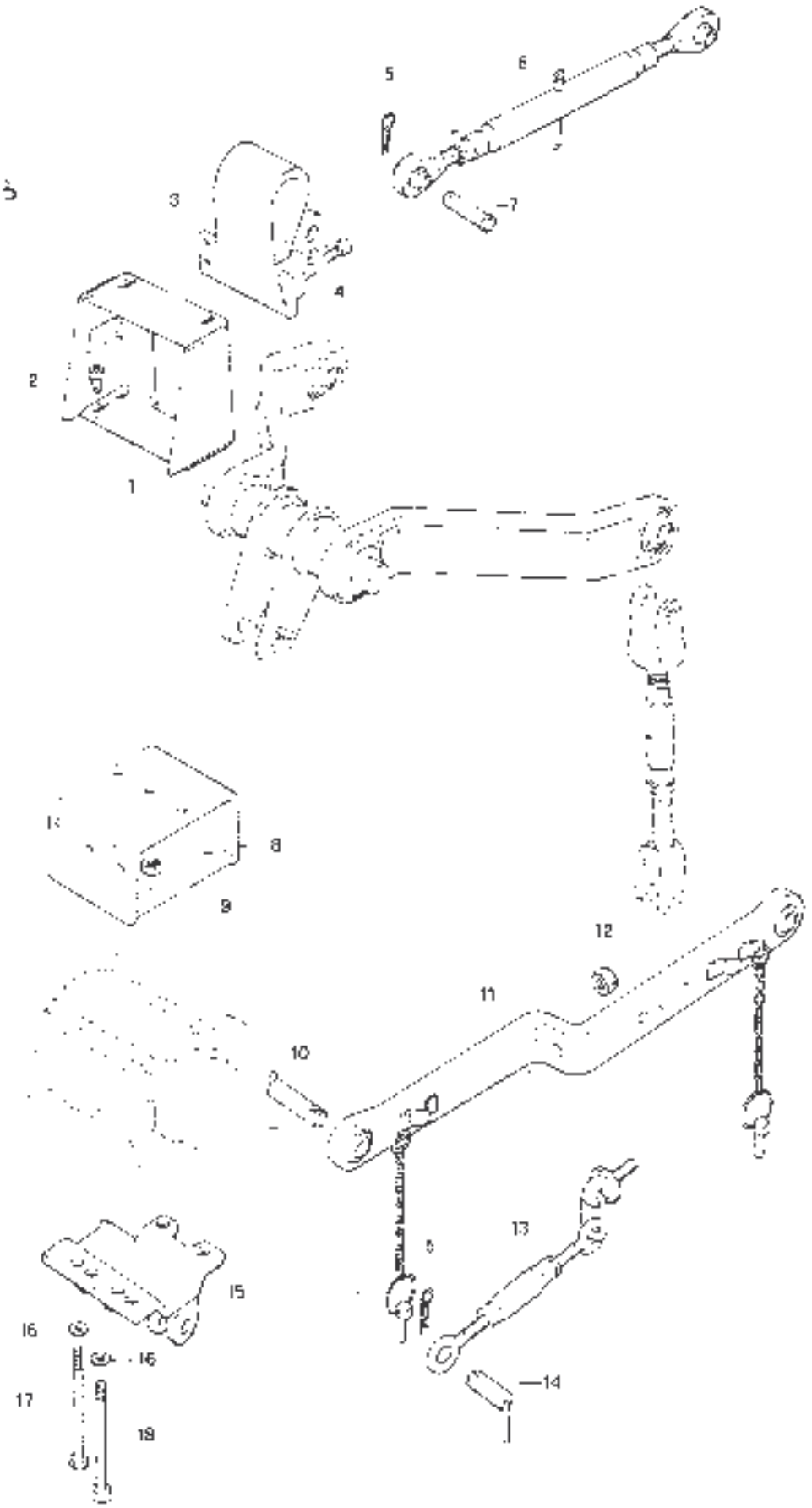


T.P.S. 4-08

C2206B

| | No. ORDIN. | | No. ORDIN. |
|---|---|---|---|
| 1 | 82.5444.000 ◐ | 17 | 87.5372.010 |
| 2 | 82.5454.000 | 18 | 82.5436.000 ◐ |
| 3 | 10.0017.901 | 19 | 82.5436.000 ◐ |
| 4 | 10.0017.905 | 20 | 11.0017.964 ◐ |
| 5 | 82.5522.010 | - | 16.0017.964 ●○◑ |
| 6 | 82.5524.030 | 21 | 81.7640.020 |
| 7 | 82.5436.000 | 22 | 82.5474.020 |
| 8 | 82.5400.000 | 23 | 86.1935.020 |
| 9 | 82.5452.000 | 24 | 84.3561.020 |
| 10 | 82.5405.000 | 25 | 84.3542.020 |
| 11 | 82.5437.000 | 26 | 81.4531.020 |
| 12 | 82.5401.000 | 27 | 81.4527.020 |
| 13 | 81.4517.020 | 28 | 11.0031.217 |
| 14 | 84.3522.020 | 29 | 86.1741.020 |
| 15 | 86.1874.020 | 30 | 82.5461.000 |
| 16 | 11.0017.913 ◐<br>11.0019.900 ●○◑ | | |

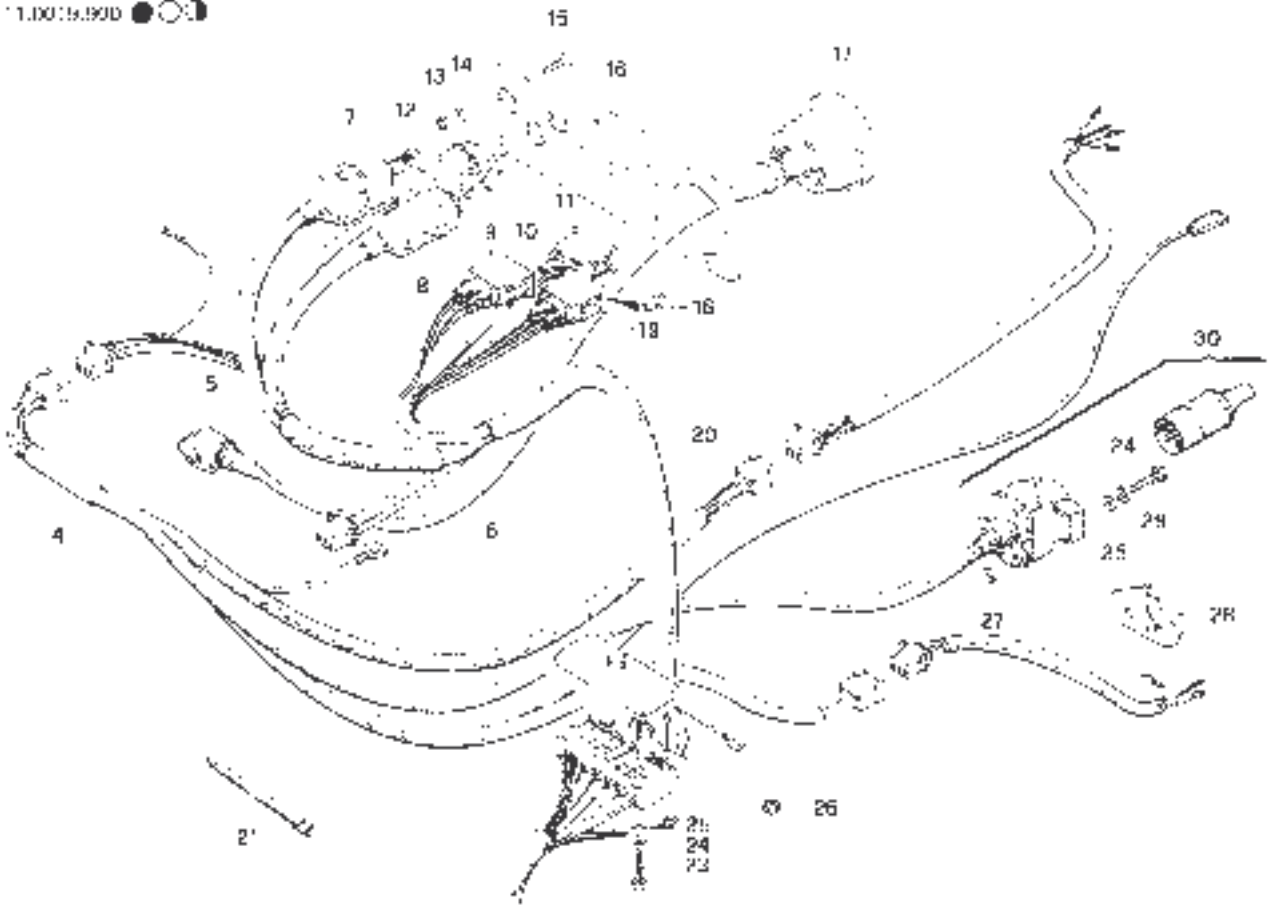

FERRARI

IMPIANTO ELETTRICO (2a PARTE)
ELECTRICAL SYSTEM (2nd PART)
EQUIPEMENT ELECTRIQUE (2ème PARTIE)
ELEKTRISCHE ANLAGE (2 TEIL)

# 75RS-85-86-86RS

1a - 0677

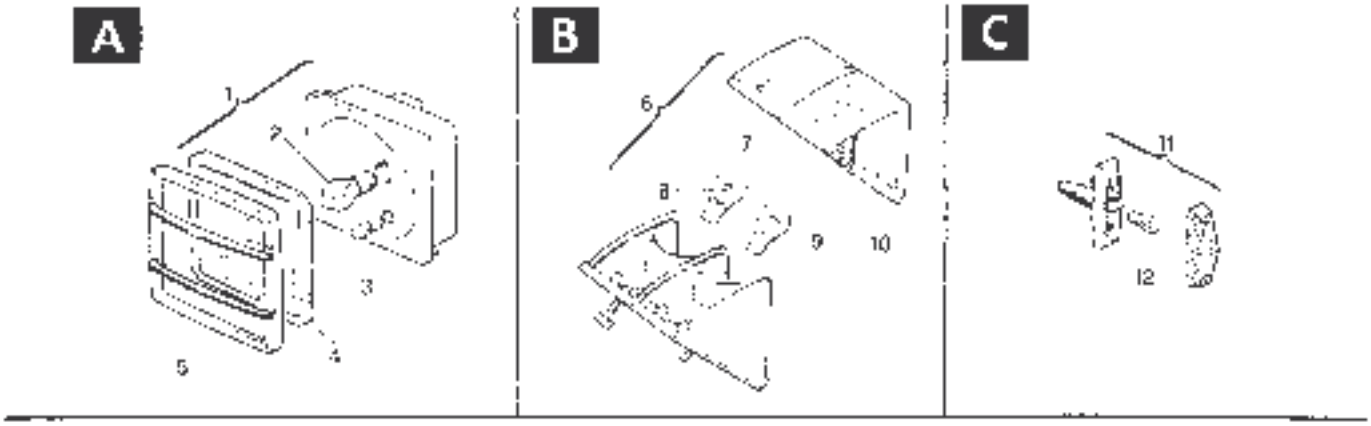


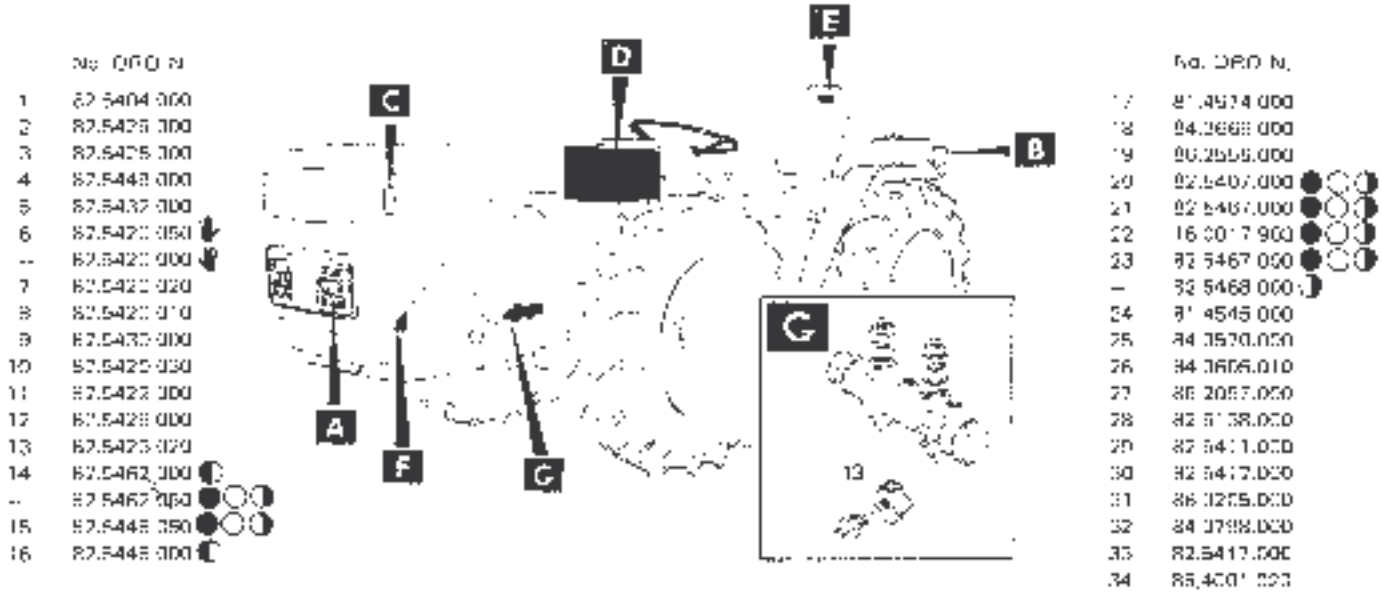


| No. | ORD N. |
|---|---|
| 1 | 82.5404.000 |
| 2 | 82.5425.000 |
| 3 | 82.5425.000 |
| 4 | 82.5448.000 |
| 5 | 82.5432.000 |
| 6 | 82.5422.050 |
| -- | 82.5422.000 |
| 7 | 82.5422.020 |
| 8 | 82.5422.010 |
| 9 | 82.5432.000 |
| 10 | 82.5425.030 |
| 11 | 82.5423.000 |
| 12 | 82.5428.000 |
| 13 | 82.5423.020 |
| 14 | 82.5462.000 |
| -- | 82.5467.050 |
| 15 | 82.5448.050 |
| 16 | 82.5448.000 |

| No. | ORD N. |
|---|---|
| 17 | 81.4574.000 |
| 18 | 84.3668.000 |
| 19 | 80.2556.000 |
| 20 | 82.5407.000 |
| 21 | 82.5467.000 |
| 22 | 16.00.17.900 |
| 23 | 82.5467.050 |
| -- | 82.5468.000 |
| 24 | 81.4545.000 |
| 25 | 84.3570.050 |
| 26 | 84.3606.010 |
| 27 | 86.2057.050 |
| 28 | 82.5138.050 |
| 29 | 82.5411.050 |
| 30 | 82.5412.050 |
| 31 | 86.3255.050 |
| 32 | 84.3798.050 |
| 33 | 82.5417.500 |
| 34 | 85.4001.500 |

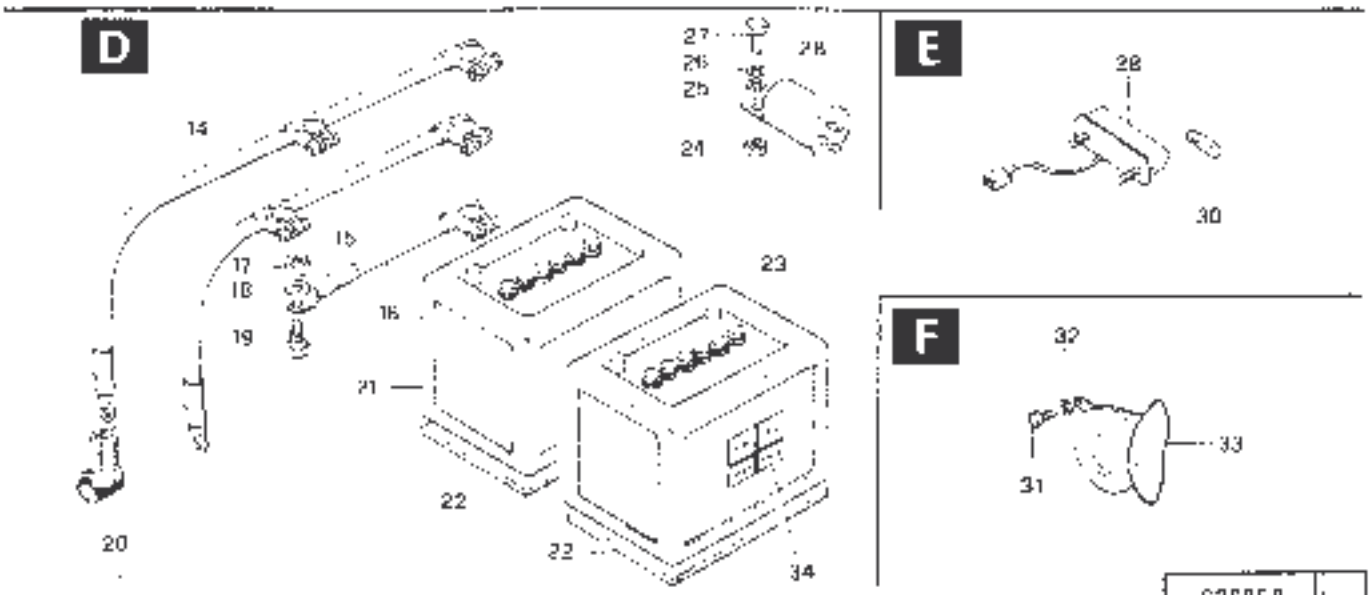


C2605B

| | No ORDIN. |
|---|---|
| 1 | 11.0065.015 |
| 2 | 80.7025.200 |
| 3 | 08.0065.106 |
| 4 | 08.0065.107 |
| 5 | 80.7005.250 |
| 6 | 11.0065.026 |
| 7 | 62.6761.000 |
| 8 | 16.0065.011 ○ ✱ |
| – | 16.0066.011 ● ✱ |
| – | 16.0066.013 ◑ ✱ |
| 9 | 16.0066.010 ○ |
| – | 16.0066.010 ● |
| – | 16.0066.012 ◑ |

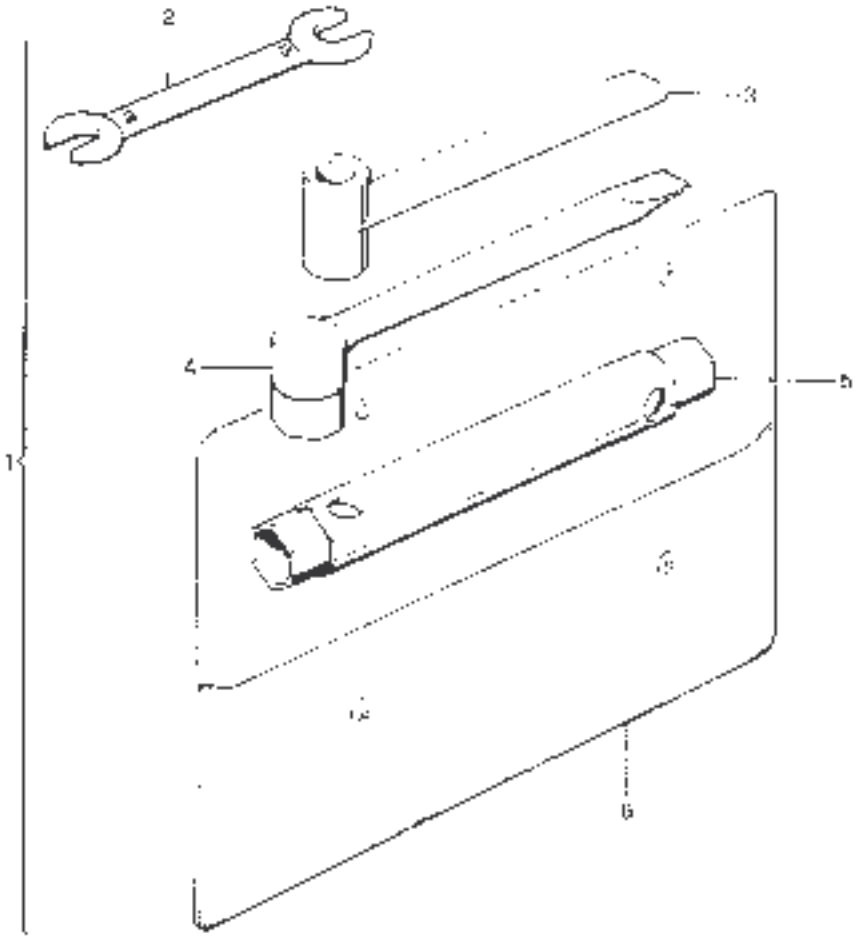


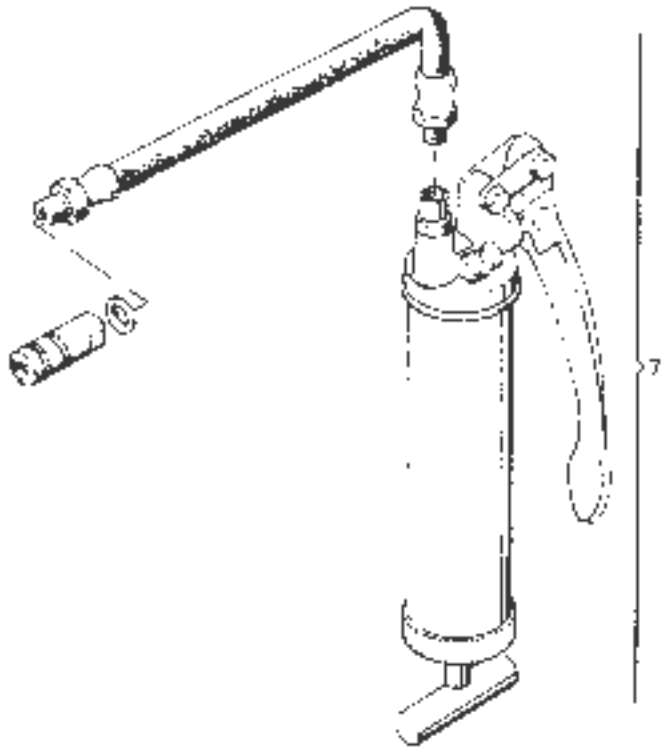


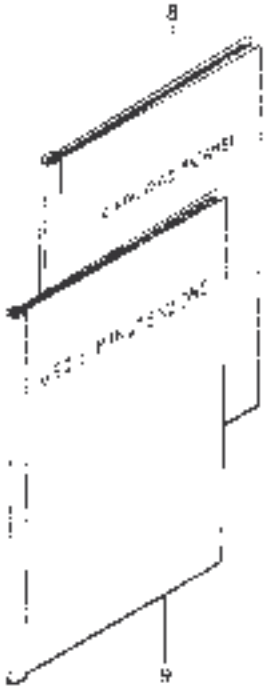




✱ A.R.

| | No. ORDIN |
|---|---|
| 1 | 86.4383.000 ✱ |
| 2 | 86.4351.000 ✱ |
| 3 | 84.4284.000 ✱ |
| 4 | 00.0010.011 ✱ |
| 5 | 84.8642.000 |
| – | 84.8664.000 ▲ |
| 6 | 84.8109.000 |
| – | 84.8129.000 ▲ |
| 7 | 84.9113.000 |
| – | 84.9117.000 ▲ |
| 8 | 86.4177.000 |
| – | 86.4357.000 ▲ |
| 9 | 11.0013.915 |
| – | 11.0013.013 ▲ |
| 10 | 11.0013.914 |
| | 11.0013.912 ▲ |
| 11 | 84.0021.020 |
| | 84.0010.010 ▲ |
| 12 | 81.4750.000 |
| | 81.4727.000 ▲ |

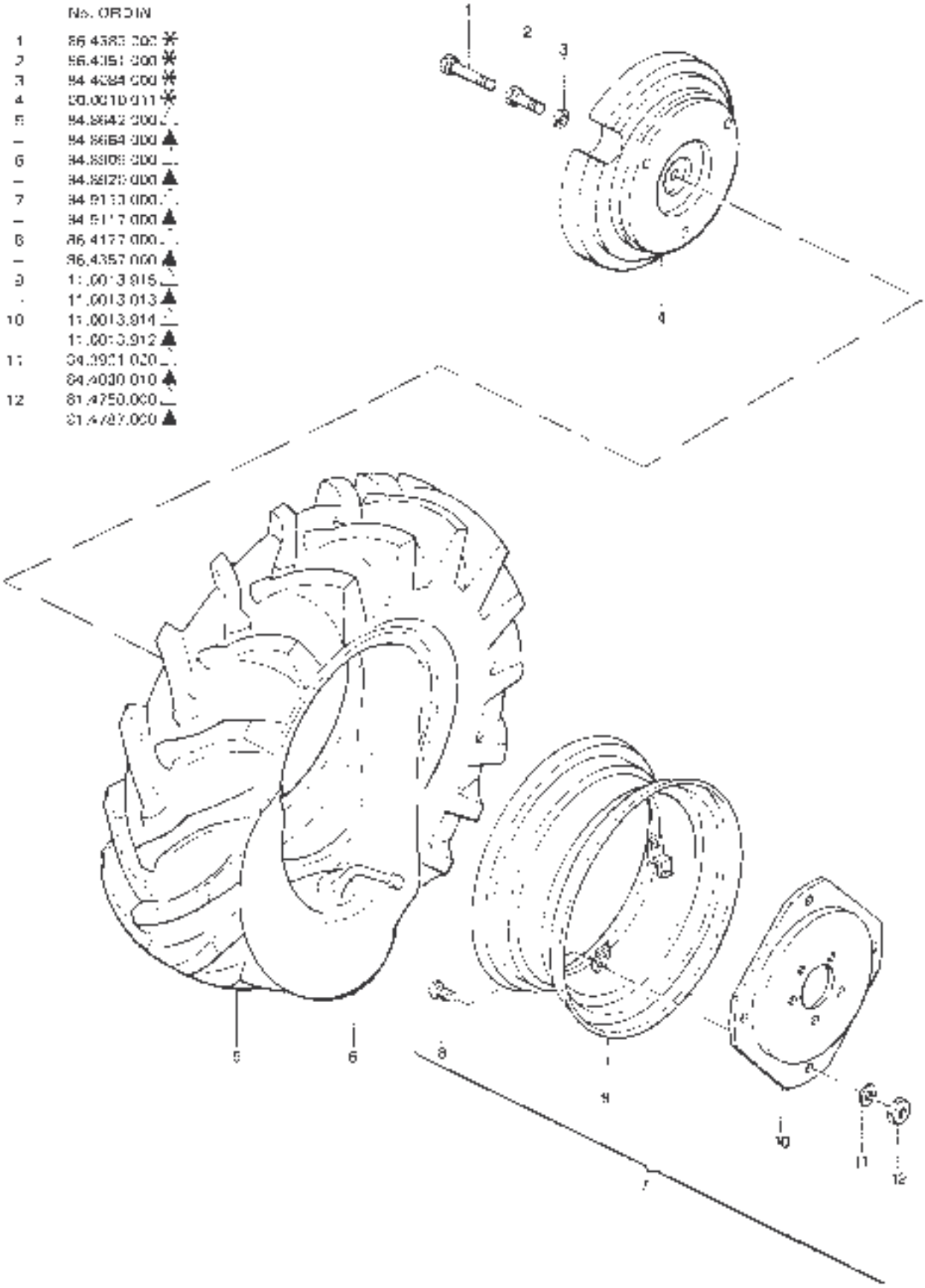




✱ A.H ▲ 9.5-20

| Nº ORDIN. / PART NO / Nº ORDIN. / PARTE NO / Nº DE REFERENCIA | | | | | |
|---|---|---|---|---|---|
| | | 8 | 82.6016.000 | 18 | 85.4299.000 |
| | | 9 | 11.0046.209 | 19 | 64.3993.000 |
| | | 10 | 11.0046.207 | 20 | 64.3921.030 |
| | | 11 | 92.0002.000 | 21 | 91.4767.030 |
| | | 12 | 11.0046.208 | 22 | 80.6035.000 |
| 1 | 11.0046.202 | 13 | 11.0046.205 | | |
| 2 | 11.0046.212 | 14 | 85.1485.000 | | |
| 3 | 11.0046.258 | 15 | 80.8338.000 | | |
| 4 | 11.0046.211 | 16 | 11.0023.207 ●○ | | |
| 5 | 80.1232.030 | – | 11.0042.229 ◑ | | |
| 6 | 01.0001.283 | 17 | 11.0046.204 ●○ | | |
| 7 | 11.0046.210 | – | 16.0047.201 ◑ | | |

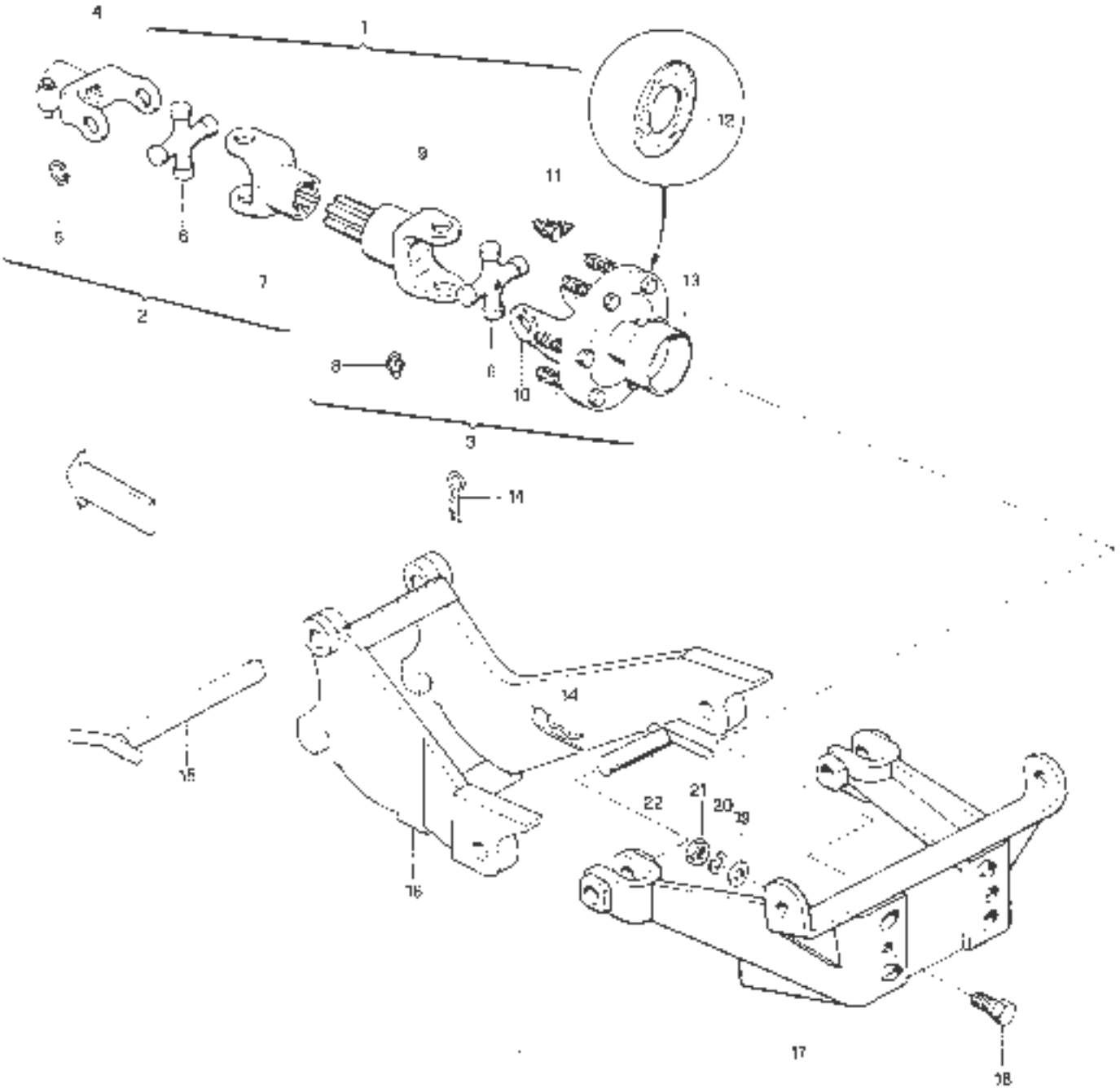

| | Nº ORDIN. PART Nº / Nº ORDIN DESTELL. Nº / Nº REFERENCIA | | |
|---|---|---|---|
| 1 | 62.1345.000 | | |
| 2 | 60.2198.050 | | |
| 3 | 80.3253.000 | | |
| 4 | 07.0040.010 | | |
| 5 | 80.6567.050 | | |
| 6 | 03.0040.211 | | |
| 7 | 85.2186.000 | | |
| 8 | 07.0040.011 | | |
| 9 | 07.0040.904 | | |
| 10 | 91.2942.000 | | |
| 11 | 85.0104.000 (0,2 mm) | | |
| – | 85.0104.010 (0,3 mm) | | |
| – | 85.0104.020 (0,5 mm) | | |
| 12 | 07.0040.101 | | |
| 13 | 91.2969.000 | | |
| 14 | 07.0040.102 | | |
| 15 | 07.0040.227 | | |
| 16 | 91.4717.050 | | |
| 17 | 86.2597.000 | | |
| 18 | 84.0643.060 | | |
| 19 | 07.0040.903 | | |
| 20 | 11.0042.900 | | |
| 21 | 85.2089.000 (0,1 mm) | | |
| – | 85.2089.010 (0,2 mm) | | |
| – | 85.2089.020 (0,3 mm) | | |
| 22 | 83.8576.000 | | |
| 23 | 60.1377.050 | | |
| 24 | 07.0040.214 | | |
| 25 | 03.0040.201 | | |
| 26 | 03.0040.234 | | |
| 27 | 07.0040.206 | | |
| 28 | 81.2838.000 | | |
| 29 | 07.0040.228 | | |
| 30 | 84.4482.000 | | |

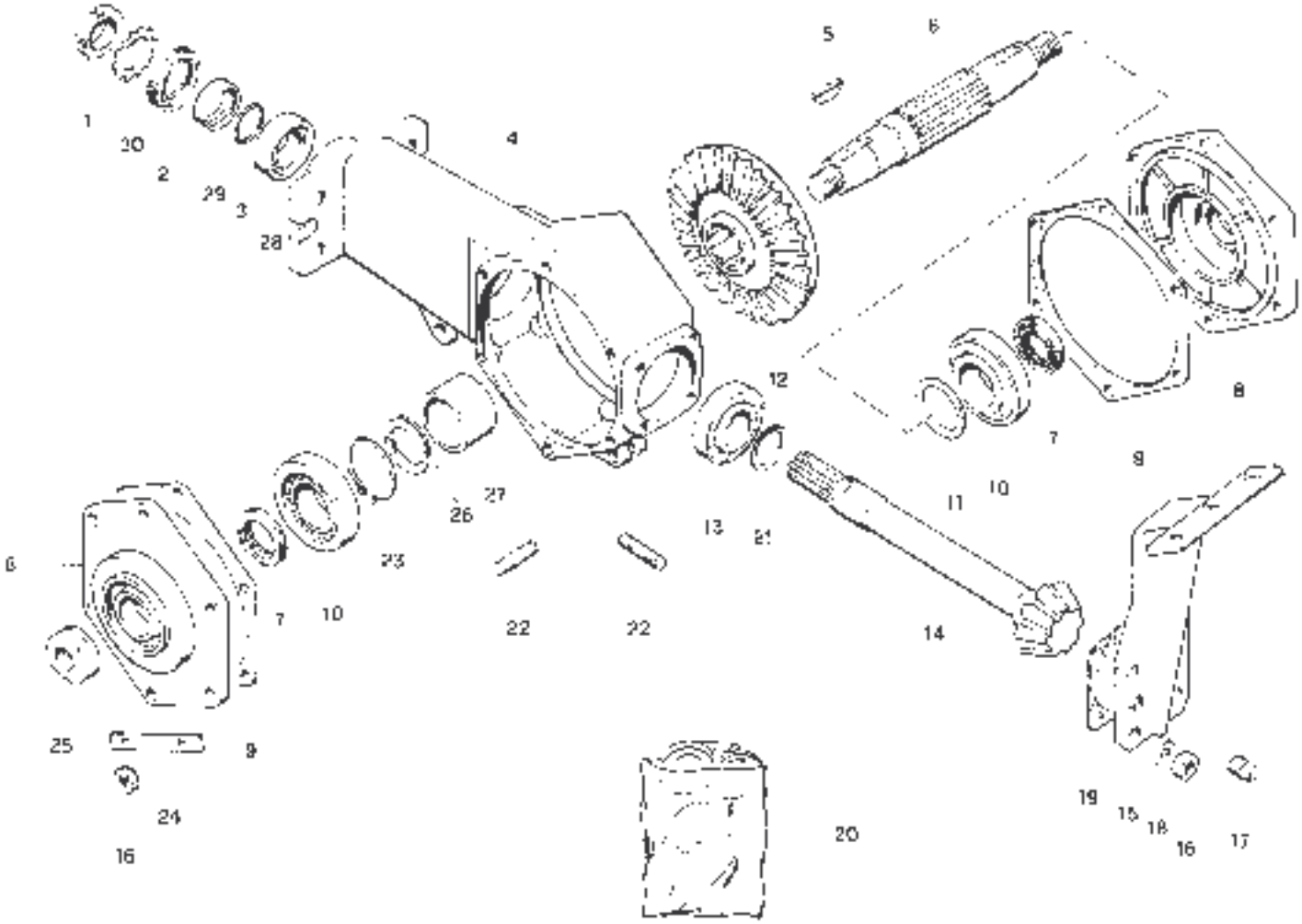

FERRARI

FRESA cm 125 (2a PARTE)
ROTARY CULTIVATOR 125 cm (2nd PART)
FRAISE cm 125 (2ème PARTIE)
FRESA cm 125 (2a PARTE)

# 75RS-76-85-86

| 1a-0877 | 2a-0278 |
|---|---|

| No. ORD N. / PART No / No. ORD N. / BESTELL No. / No. REFERENCIA | |
|---|---|
| 1 | 11.0043.255 |
| 2 | 11.0042.255 |
| 3 | 11.0042.257 |
| 4 | 81.4736.260 |
| 5 | 84.3843.260 |
| 6 | 84.3901.260 |
| 7 | 86.3951.300 |
| 8 | 84.4160.300 |
| 9 | 81.5617.300 |
| 10 | 11.5042.241 |
| 11 | 81.4721.300 |
| 12 | 11.5043.238 |
| – | 11.5043.237 |
| 13 | 86.3878.050 |
| 14 | 11.5043.243 |
| 15 | 11.0041.208 |
| – | 11.0043.245 |
| 16 | 11.0043.103 |
| 17 | 11.0041.207 |
| – | 11.0043.244 |
| 18 | 11.0046.700 |
| 19 | 11.0043.246 |
| 20 | 11.0043.247 |
| 21 | 86.3925.000 |
| 22 | 86.3897.010 |
| 23 | 11.0042.932 |
| 24 | 11.0046.050 |
| 25 | 05.4002.010 |
| 26 | 01.0001.485 |
| 27 | 16.0032.931 |
| 28 | 16.0033.902 |

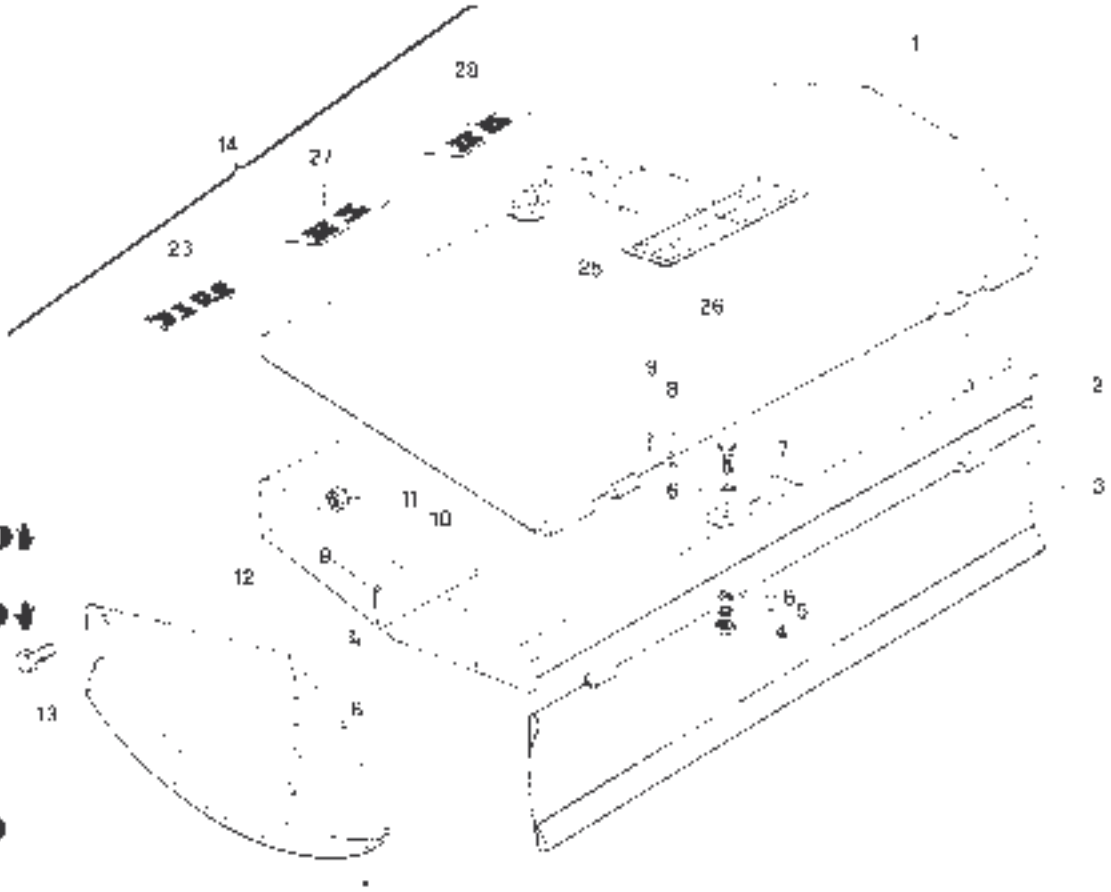

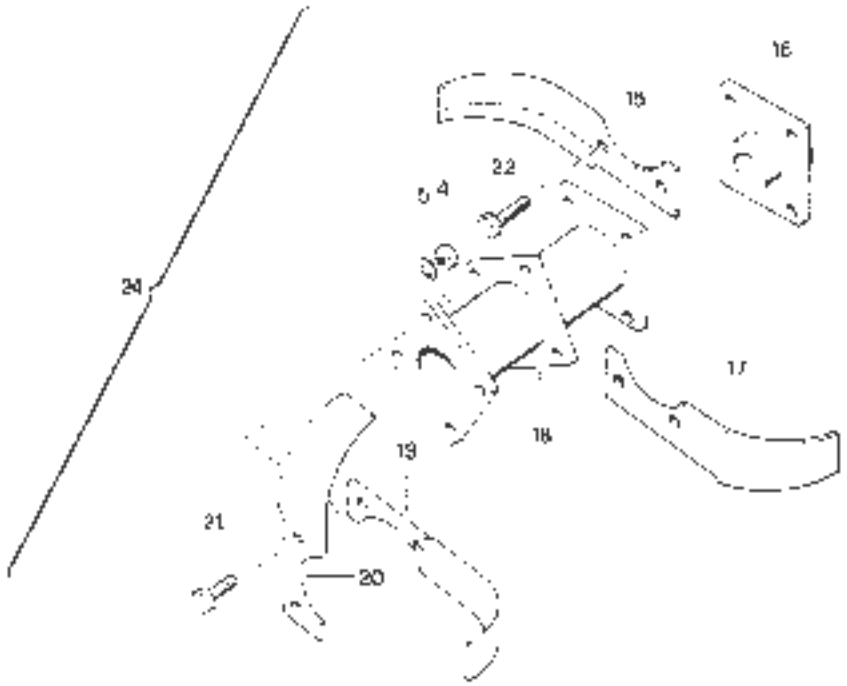

| F1301C | 1 |
|---|---|
| F1301C | 2 |

# HOW TO PLACE WATERWORKS PARTS

1 MACHINE TYPE

2 SYSTEM TYPE

## UNITS AND PIPING

3 PUMP ACCORDING TO THE INSTALLED ENGINE (delivered as assembly)

4 HYDRAULIC DISTRIBUTOR (delivered as assembly)

5 POWER STEERING ACCORDING TO MODEL INSTALLED (delivered assembly)

6 CONNECTING LINES

## PARTS OF A UNIT

7 REFER TO THE SUITABLE FIGURE

8 VALIDITY NOTES (shall be considered as stated in the spare Parts Catalogue)

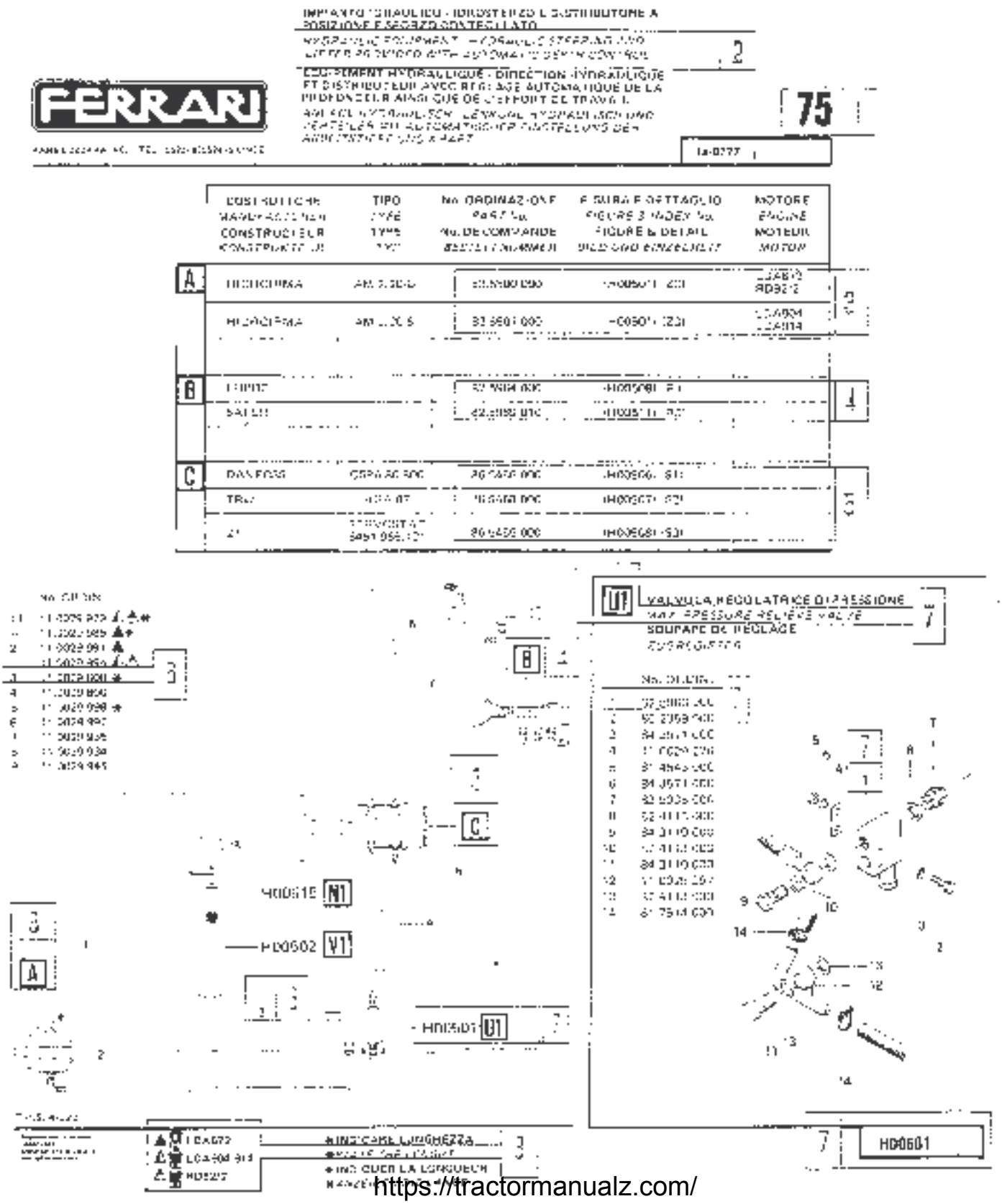

| | No. ORDIN. |
|---|---|
| 1 | 11.0027.921 ✱ |
| | 11.0029.910 ✱ ▲ |
| | 11.0029.988 ✱ ▲ |
| - | 11.0027.921 ✱ ▲ |
| 2 | 11.0027.926 |
| - | 11.0029.906 ▲ |
| - | 16.0029.909 ▲ |
| - | 11.0027.920 ▲ |
| 3 | 11.0029.985 ✱ |
| 4 | 11.0029.024 |
| 5 | 16.0029.031 ✱ |
| 6 | 11.0027.073 |
| 7 | 11.0029.035 |
| 8 | 11.0029.034 |
| 9 | 16.0027.005 |

| | COSTRUTTORE / *MANUFACTURER* / CONSTRUCTEUR / *KONSTRUKTEUR* | TIPO / *TYPE* / TYPE / *TYP* | No. ORDINAZIONE / *PART No.* / No. DE COMMANDE / *BESTELLNUMMER* | FIGURA E DETTAGLIO / *FIGURE & INDEX No.* / FIGURE & DETAIL / *BILD UND EINZELNR.* | MOTORE / *ENGINE* / MOTEUR / *MOTOR* |
|---|---|---|---|---|---|
| A | [illegible] | AM 2.74-35 | 83.6509.020 | H00526 [illegible] | LDA 673 LDA 832 |
| B | DANFOSS | | 83.5051.020 | H00531 [illegible] | |
| C | [illegible] | [illegible] | 83.6465.000 | H00530 [illegible] | |

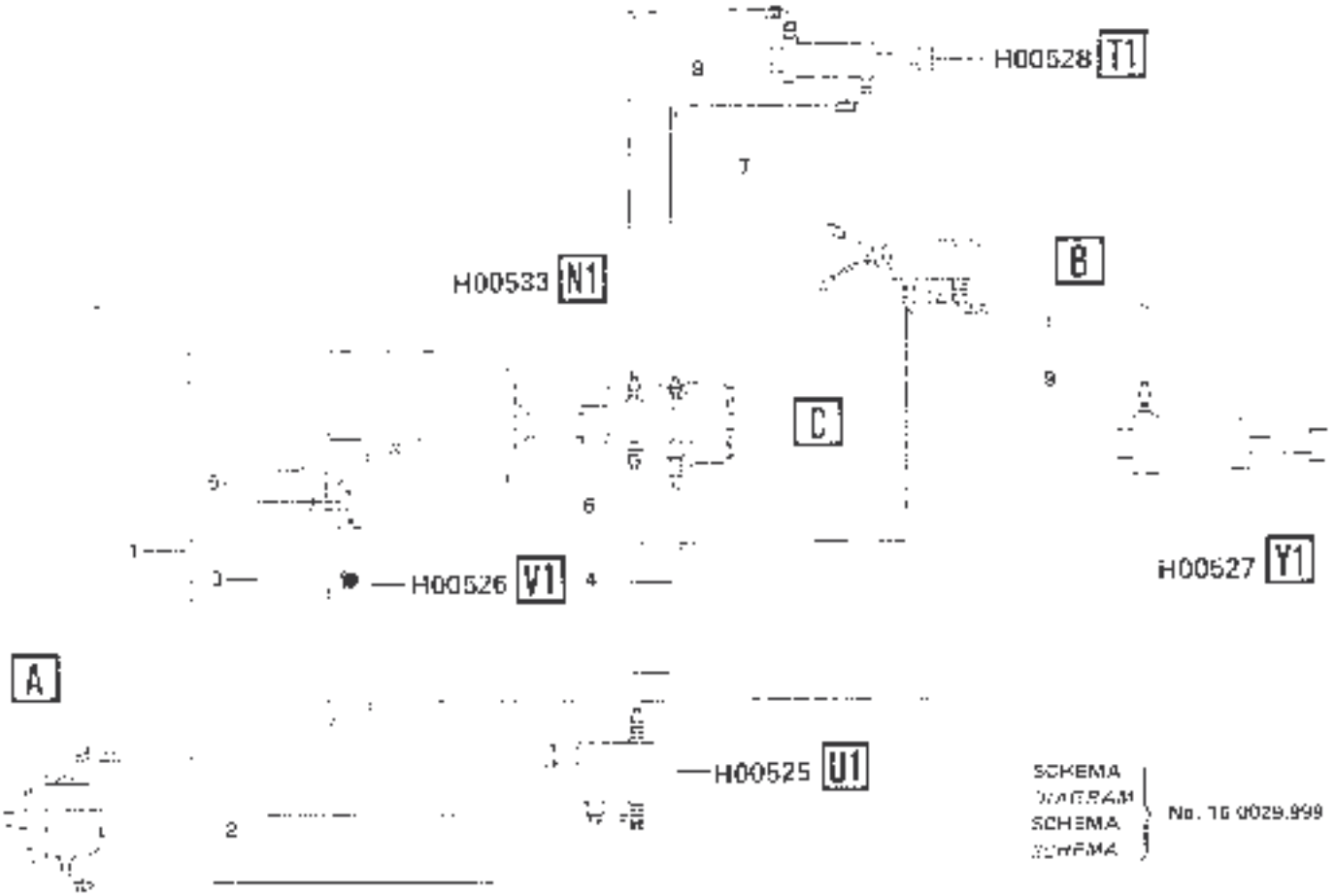


SCHEMA / *DIAGRAM* / SCHEMA / *SCHEMA* } No. 16.0029.999

## Z1 POMPA CON ALBERO CONICO
*CONICAL SHAFT PUMP*
POMPE A ARBRE CONIQUE
*KONISCHWELLEPPUMPE*

| | No. ORDIN. |
|---|---|
| 1 | 92.5610.000 |
| 2 | 42.2192.000 |
| 3 | 80.2462.010 |
| 4 | 82.4022.000 |
| 5 | 80.3165.000 |
| 6 | 86.2270.000 |
| 7 | 11.0027.217 |
| 8 | 86.2108.000 |
| 9 | 80.3185.000 |
| 10 | 81.7514.000 |

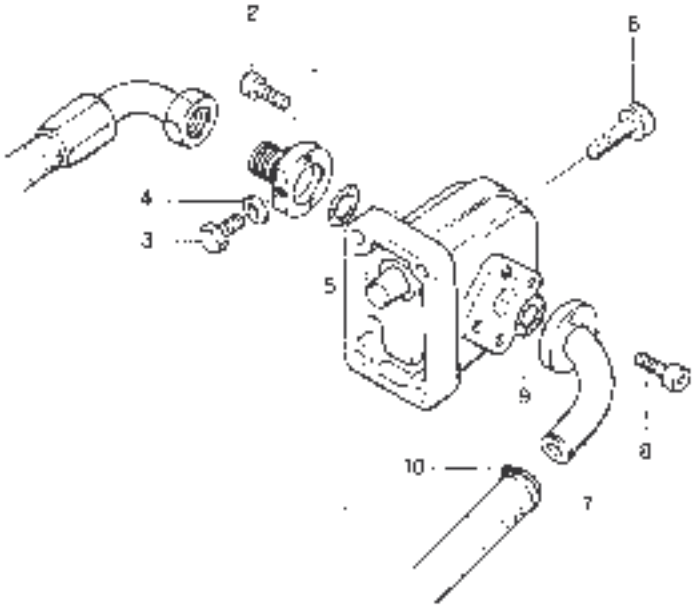


## U1 VALVOLA REGOLATRICE DI PRESSIONE
*MAX. PRESSURE RELIEF VALVE*
SOUPAPE DE REGLAGE
*ZUGREGISTER*

| | No. ORDIN. |
|---|---|
| 1 | 82.5883.000 |
| 2 | 86.2346.000 |
| 3 | 84.3571.000 |
| 4 | 83.5034.000 |
| 5 | 82.4113.000 |
| 6 | 82.5035.000 |
| 7 | 82.4113.000 |

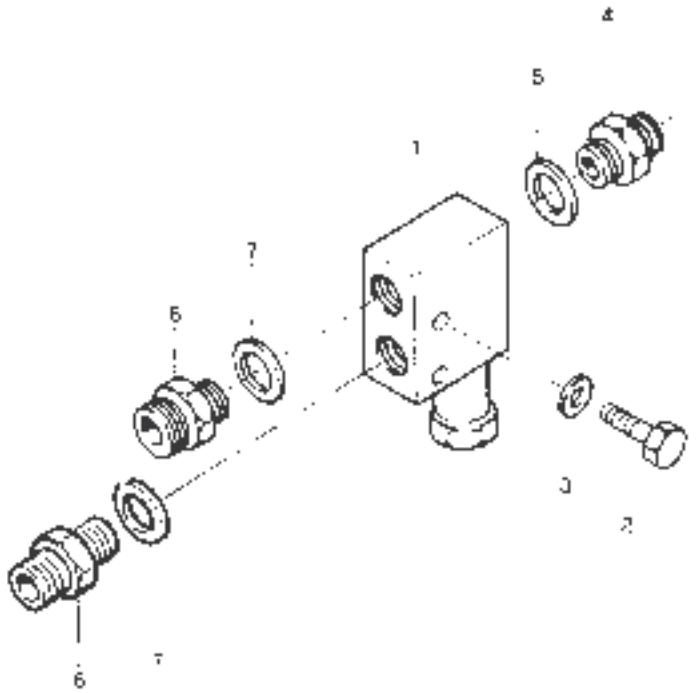

V1

| | No. ORDIN. |
|---|---|
| 1 | 16.0029.236 |
| 2 | 61.7514.000 |
| 3 | 86.2554.020 |
| 4 | 94.3566.000 |
| 5 | 11.0021.089 |
| 6 | 65.2570.000 |
| 7 | 81.4751.020 |
| 8 | 52.6963.000 |
| 9 | 16.2029.700 |
| 10 | 11.0029.901 |
| 11 | 86.2554.000 |
| 12 | 94.3008.020 |
| 13 | 61.4589.010 |
| 14 | 55.2597.020 |

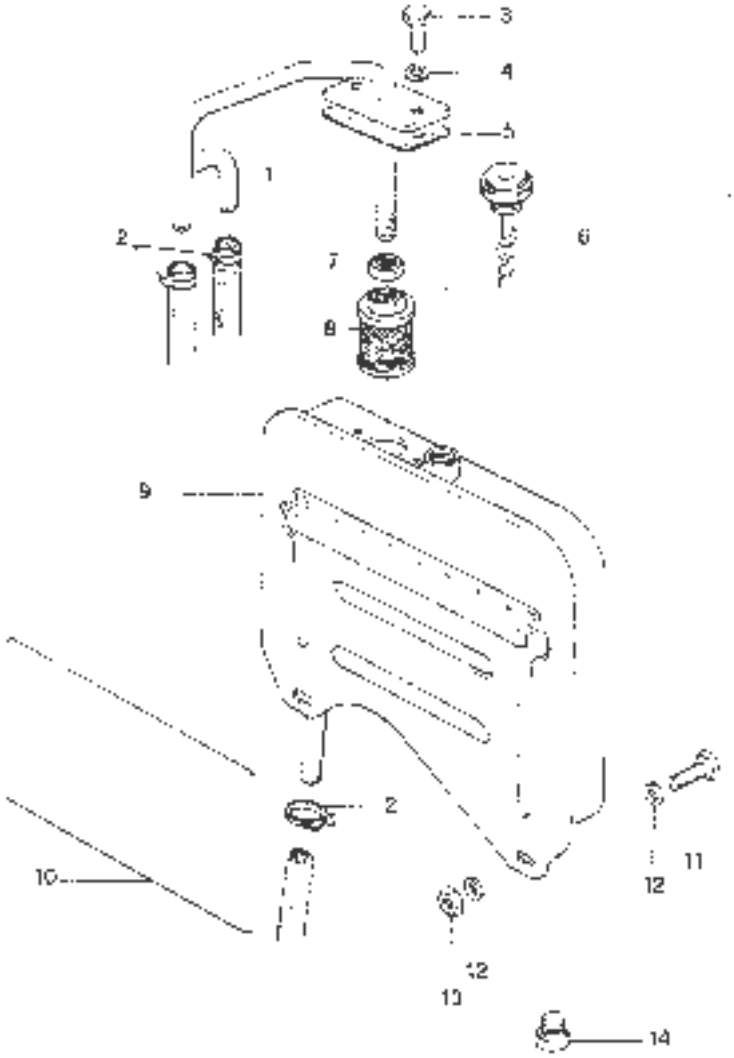

Y1

| | No. ORDIN |
|---|---|
| 1 | 85.0377.000 |
| 2 | 85.5812.000 |
| 3 | 81.0561.000 |
| 4 | 84.4230.000 |
| 5 | 80.9322.000 |
| 6 | 80.9325.000 |
| 7 | 81.4793.000 |
| 8 | 84.4040.000 |
| 9 | 80.9326.000 |
| 10 | 80.2239.040 |
| 11 | 80.9303.000 |
| 12 | 90.3186.000 |
| 13 | 80.9324.000 |
| 14 | 80.2176.000 |
| 15 | 80.9328.000 |
| 16 | 80.4250.000 |
| 17 | 82.6008.000 |
| 18 | 11.0029.285 4,5 DC |
| 19. | 84.4273.000 |

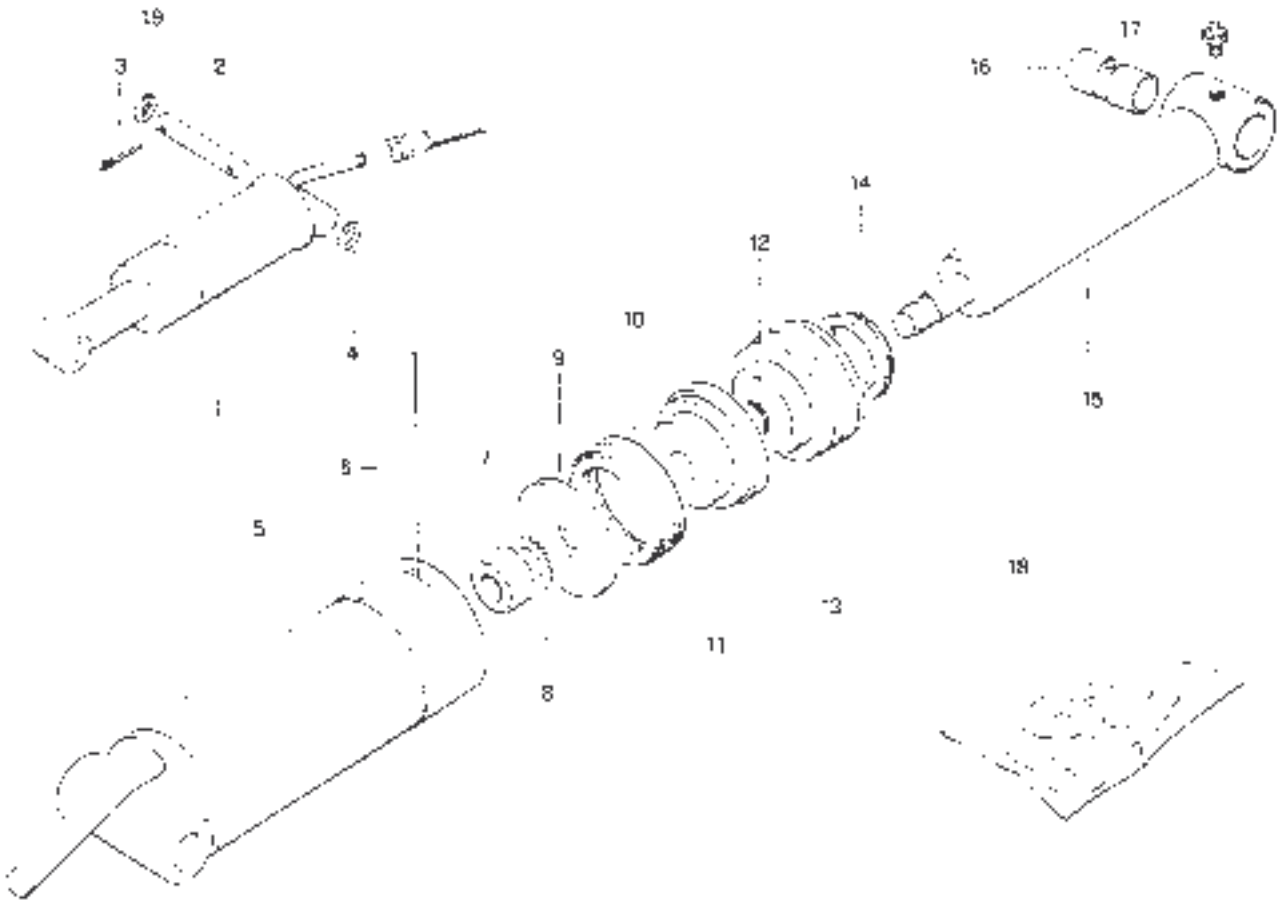

T1

| | No. ORIGIN. | | No. ORIGIN. |
|---|---|---|---|
| 1 | 10.3027.200 | 17 | 84.2992.050 |
| 2 | 80.2725.000 | 18 | 81.4786.050 |
| 3 | 84.2640.050 | 19 | 85.9271.050 |
| 4 | 85.3426.000 | 20 | 80.9274.050 |
| 5 | 84.3755.050 | 21 | 80.9318.010 |
| 6 | 80.9318.200 | 22 | 85.2080.010 |
| 7 | 83.5775.050 | 23 | 85.3282.050 |
| 8 | 81.5625.000 | 24 | 83.7040.075 |
| 9 | 83.5050.000 | 25 | 83.3056.000 |
| 10 | 84.2937.000 | 26 | 80.9312.000 |
| 11 | 82.8016.000 | 27 | 64.4005.200 |
| 12 | 81.1950.200 | 28 | 61.4798.200 |
| 13 | 83.1180.200 | 29 | 80.3336.200 |
| 14 | 85.2750.200 | 30 | 80.9275.200 |
| 15 | 11.3030.226 | 31 | 11.0226.905 |
| 16 | 81.1955.200 | | |

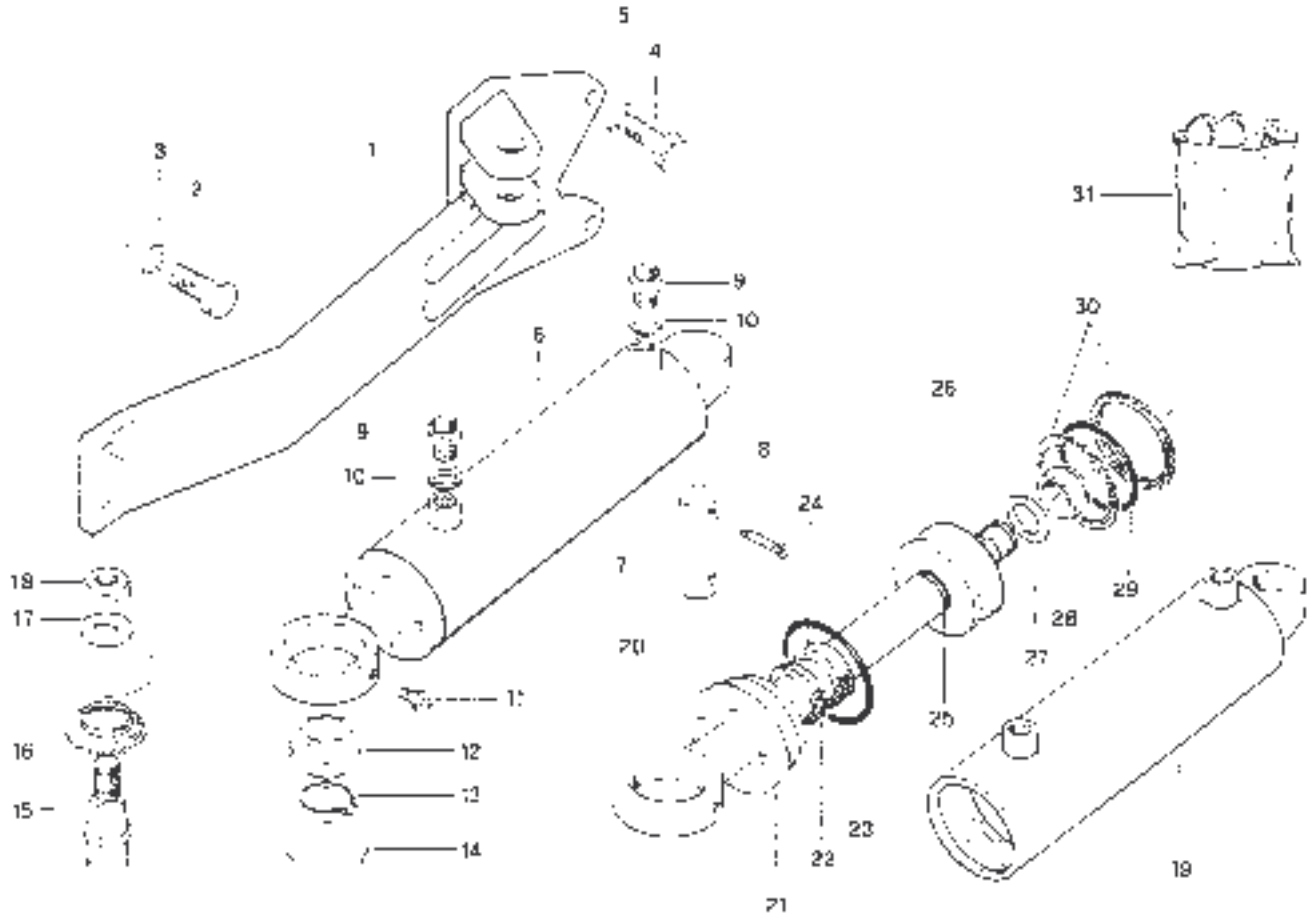

Alb. STERZO DANFOSS
497064102

ST

| | No. ORDIN. |
|---|---|
| 1 | 11.0026.011 |
| 2 | 86.2440.040 |
| 3 | 11.0026.221 |
| 4 | 56.1407.090 |
| 5 | 90.6450.200 |
| 6 | 80.4323.050 |
| 7 | 18.3026.201 |
| 8 | 86.3069.000 |
| 9 | 86.5469.000 |
| 10 | 60.0193.000 |
| 11 | 92.5710.000 |
| 12 | 11.0026.250 |
| 13 | 80.5040.200 |
| 14 | 82.4141.200 |
| 15 | 63.5007.000 |
| 16 | 82.4141.000 |
| 17 | 63.5007.000 |
| 18 | 82.4141.000 |
| 19 | 63.5040.000 |
| 20 | 82.4141.000 |
| 21 | 86.2919.000 |

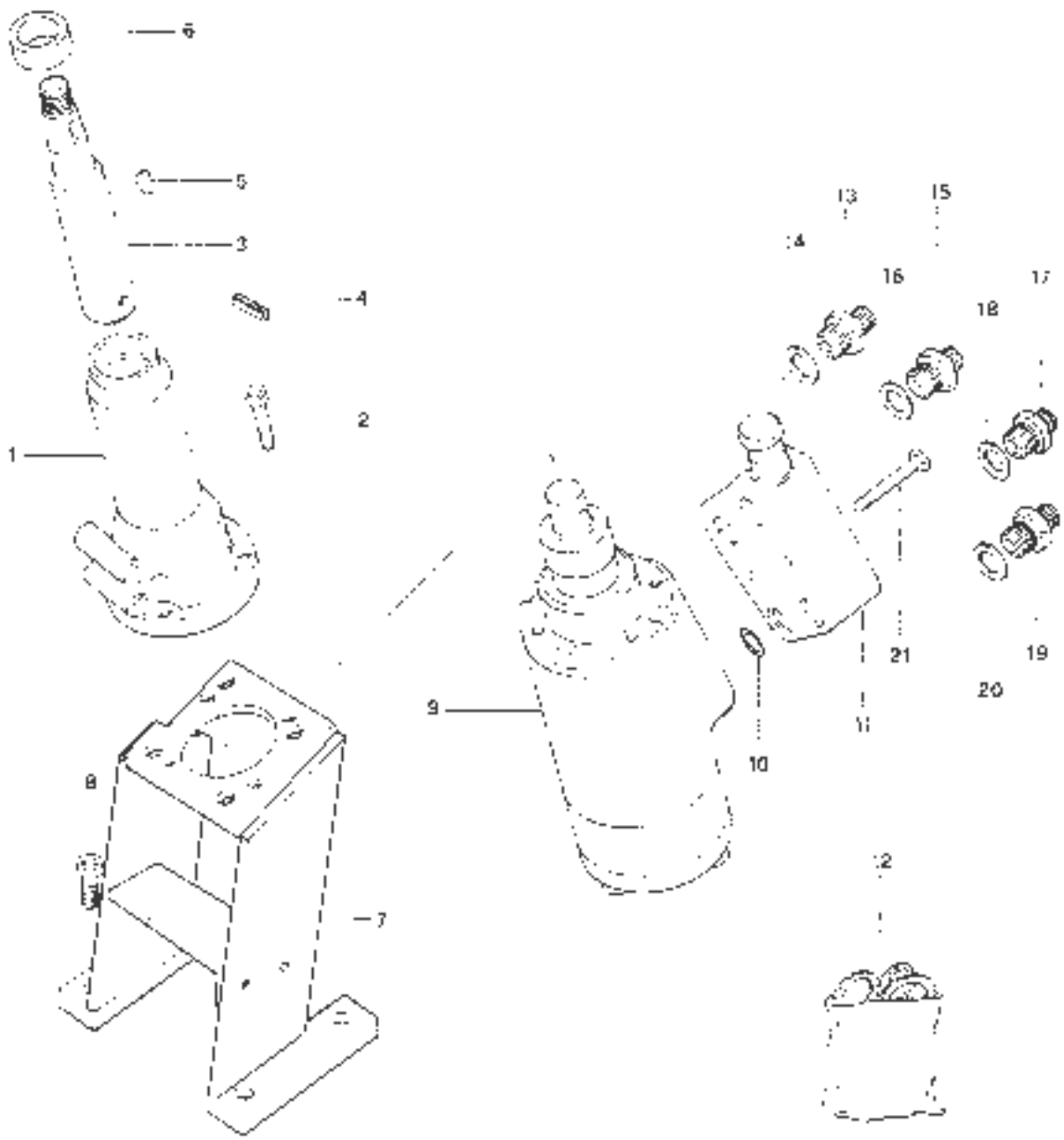

DISTRIBUTORE A POSIZIONE E SFORZO CONTROLLATO
ERPOZ (per dettagli vedi fig. H00532A + B)
*DISTRIBUTOR PROVIDED WITH AUTOMATIC DEPTH CONTROL (see ref. fig. H00532A and B)*
DISTRIBUTEUR AVEC REGLAGE AUTOMATIQUE DE LA PROFONDEUR AINSI QUE DE L'EFFORT DE TRAVAIL
(ref. fig. H00532A + B)
*VERTEILER MIT AUTOMATISCHER FINSTELLUNG DER ARBEITSTIEFE UND KRAFT (anzeigen bei H00532A und B)*

FERRARI

# 85-86-86 RS

1a-1077

R2

SE CON MITA - 85-86RS
825855190
Molla - 825860038 -

| | No. ORDIN. |
|---|---|
| 1 | 16.0221.355 |
| 2 | 86.3720.000 |
| 3 | 82.5881.000 |
| 4 | 86.3776.000 |
| 5 | 84.3755.000 |
| 6 | 84.3827.200 |
| 7 | 83.5036.000 |
| 8 | 84.3027.000 |
| 9 | 84.3120.020 |
| 10 | 84.7570.200 |
| 11 | 84.4110.200 |
| 12 | 83.5036.000 |
| 13 | 84.3907.200 |
| 14 | 11.3077.210 * |
| 15 | 82.4113.000 * |
| 16 | 82.5980.000 * |
| 17 | 11.3029.254 * |
| 18 | 80.3700.000 |

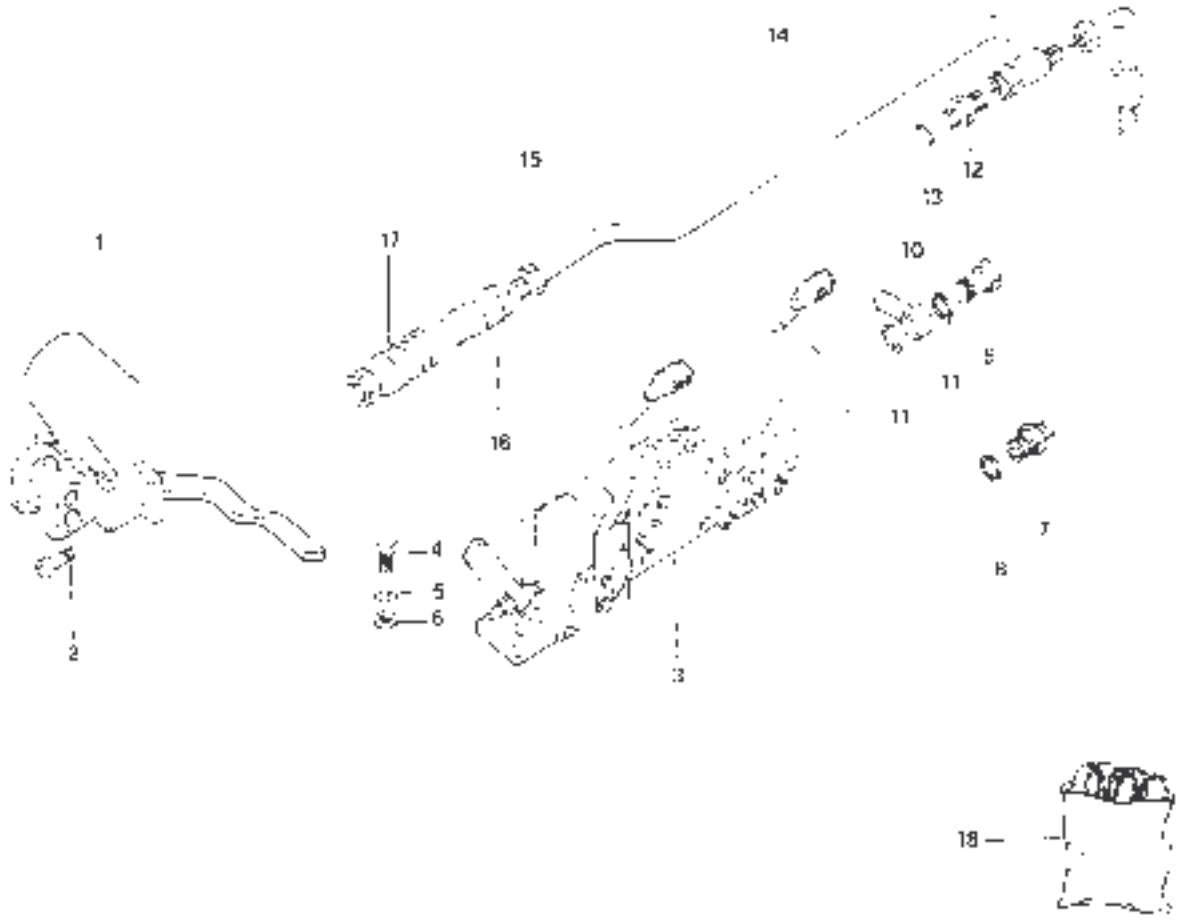


T.F.S. 4-330

*A RICHIESTA
*ON REQUEST
*SUR DEMANDE
*SUR ANFRAGE

H00531

DISTRIBUTORE A POSIZIONE E SFORZO CONTROLLATO
(dettagli 1a parte)
*DISTRIBUTOR PROVIDED WITH AUTOMATIC DEPTH CONTROL*
*(det. 1st part)*
DISTRIBUTEUR AVEC REGLAGE AUTOMATIQUE DE LA PROFONDEUR AINSI QUE DE L'EFFORT DE TRAVAIL
(dét. 1ère partie)
*VERTEILER MIT AUTOMATISCHER EINSTELLUNG DER ARBEITSTIEFE UND KRAFT (einzelheiten 1 teil)*

FERRARI

# 85-86-86 RS

1a-1077

R1

| | No. ORDIN. | | No. ORDIN. | | No. ORDIN. | | No. ORDIN. |
|---|---|---|---|---|---|---|---|
| 1 | 86.1066.000 | 14 | 82.5991.001 | 27 | 82.5984.002 | 40 | 82.5984.046 |
| 2 | 86.1165.000 | 15 | 86.1072.000 | 28 | 82.5984.003 | 41 | 82.5984.047 |
| 3 | 82.5991.008 | 16 | 86.2621.000 | 29 | 81.2503.000 | 42 | 82.5984.054 |
| 4 | 86.2014.000 | 17 | 84.3664.000 | 30 | 82.5984.044 | 43 | 85.[illegible]3.000 |
| 5 | 81.4570.010 | 18 | 82.5991.005 | 31 | 86.2063.000 | 44 | 82.5984.050 |
| 6 | 82.5984.042 | 19 | 82.5991.004 | 32 | 84.3643.000 | 45 | 82.5984.051 |
| 7 | 82.5984.038 | 20 | 85.1130.000 | 33 | 82.5984.040 | 46 | 85.[illegible]79.000 |
| 8 | 82.5984.039 | 21 | 82.5991.003 | 34 | 85.1165.000 | 47 | 82.5984.052 |
| 9 | 86.1972.000 | 22 | 82.5991.002 | 35 | 87.5991.009 | 48 | 82.5984.053 |
| 10 | 82.5984.040 | 23 | 82.5991.006 | 36 | 86.2067.000 | 49 | 82.5984.045 |
| 11 | 82.5984.041 | 24 | 81.4570.010 | 37 | 84.3575.000 | 50 | 84.3664.000 |
| 12 | 86.1997.000 | 25 | 82.5984.001 | 38 | 82.5984.055 | 51 | 86.2560.000 |
| 13 | 84.2675.000 | 26 | 82.5991.007 | 39 | 87.5984.045 | | |

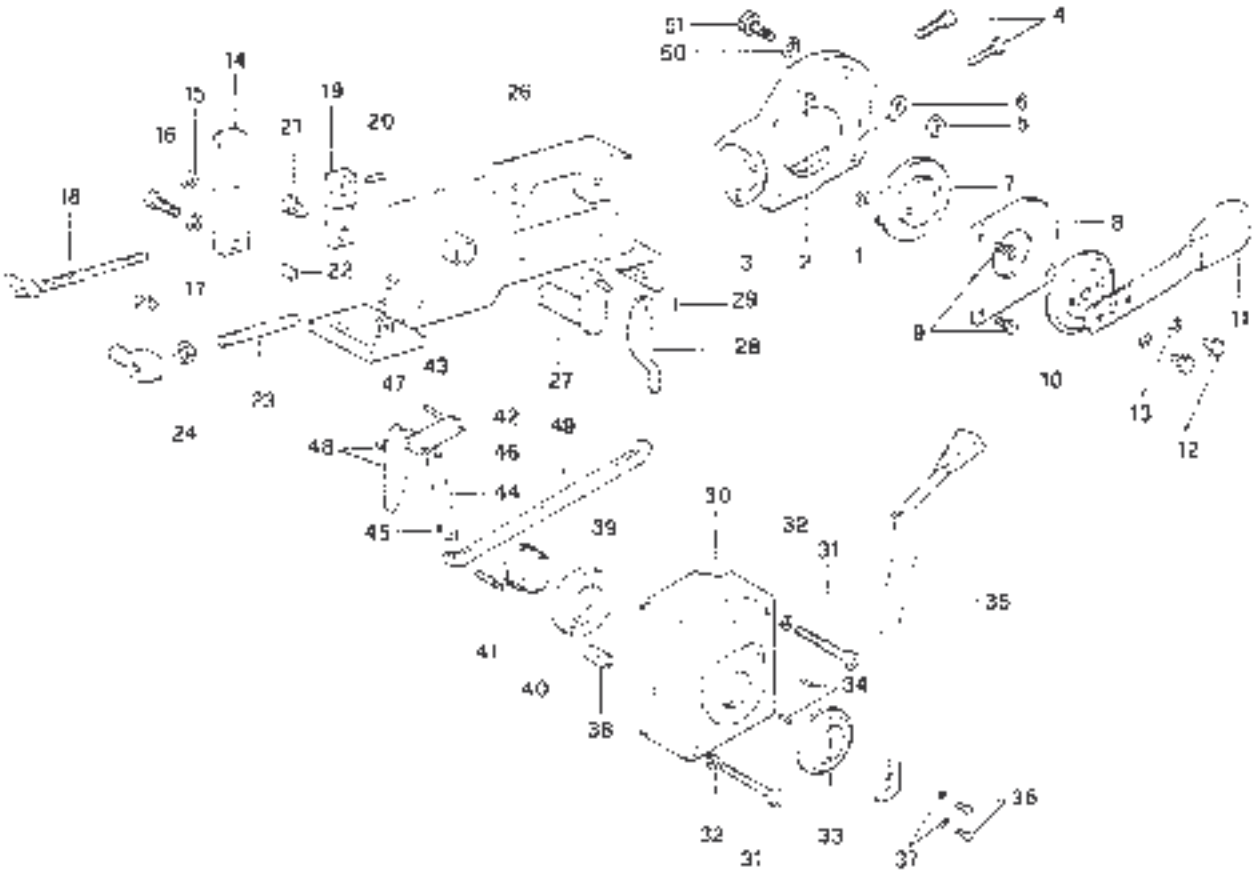


T.P.S. 4-[illegible]

H00532 A

DISTRIBUTORE A POSIZIONE E SFORZO CONTROLLATO
(dettagli 2a parte)
*DISTRIBUTOR PROVIDED WITH AUTOMATIC DEPTH CONTROL*
*(det. 2nd part)*
DISTRIBUTEUR AVEC REGLAGE AUTOMATIQUE DE LA PROFONDEUR AINSI QUE DE L'EFFORT DE TRAVAIL
(det. (2ème partie)
*VERTEILER MIT AUTOMATISCHER FIXSTELLUNG DER ARBEITSTIEFE UND KRAFT (ausführlich 2 Teil)*

# FERRARI

# 85-86-86 RS

1a-1077

R1

| | N. ORDIN. | | N. ORDIN. |
|---|---|---|---|
| 1 | 86.2255.000 | 23 | 82.5984.032 |
| 2 | 84.0571.000 | 24 | 86.2910.000 |
| 3 | 82.5984.030 | 25 | 86.2910.000 |
| 4 | 82.5984.024 | 26 | 82.5984.014 |
| 5 | 90.2196.000 | 27 | 82.5984.060 |
| 6 | 90.2206.000 | 28 | 86.2910.000 |
| 7 | 90.3195.000 | 29 | 80.3204.000 |
| 8 | 82.5984.023 | 30 | 82.5984.033 |
| 9 | 82.5984.022 | 31 | 82.5984.034 |
| 10 | 82.5984.029 | 32 | 82.5984.031 |
| 11 | 82.5984.020 | 33 | 82.5984.032 |
| 12 | 82.5984.026 | 34 | 82.5984.012 ▲ |
| 13 | 82.5984.021 | 35 | 82.5984.011 ▲ |
| 14 | 82.5984.027 | 36 | 82.5984.019 |
| 15 | 82.5984.020 | 37 | 82.5984.018 |
| 16 | 82.5984.025 | 38 | 95.1322.000 |
| 17 | 82.5984.020 | 39 | 80.3175.000 |
| 18 | 80.3185.000 | 40 | 82.5984.015 |
| 19 | 82.5984.035 | 41 | 82.5984.016 |
| 20 | 80.1174.000 | | |
| 21 | 82.5984.017 | | |
| 22 | 82.5984.013 | | |

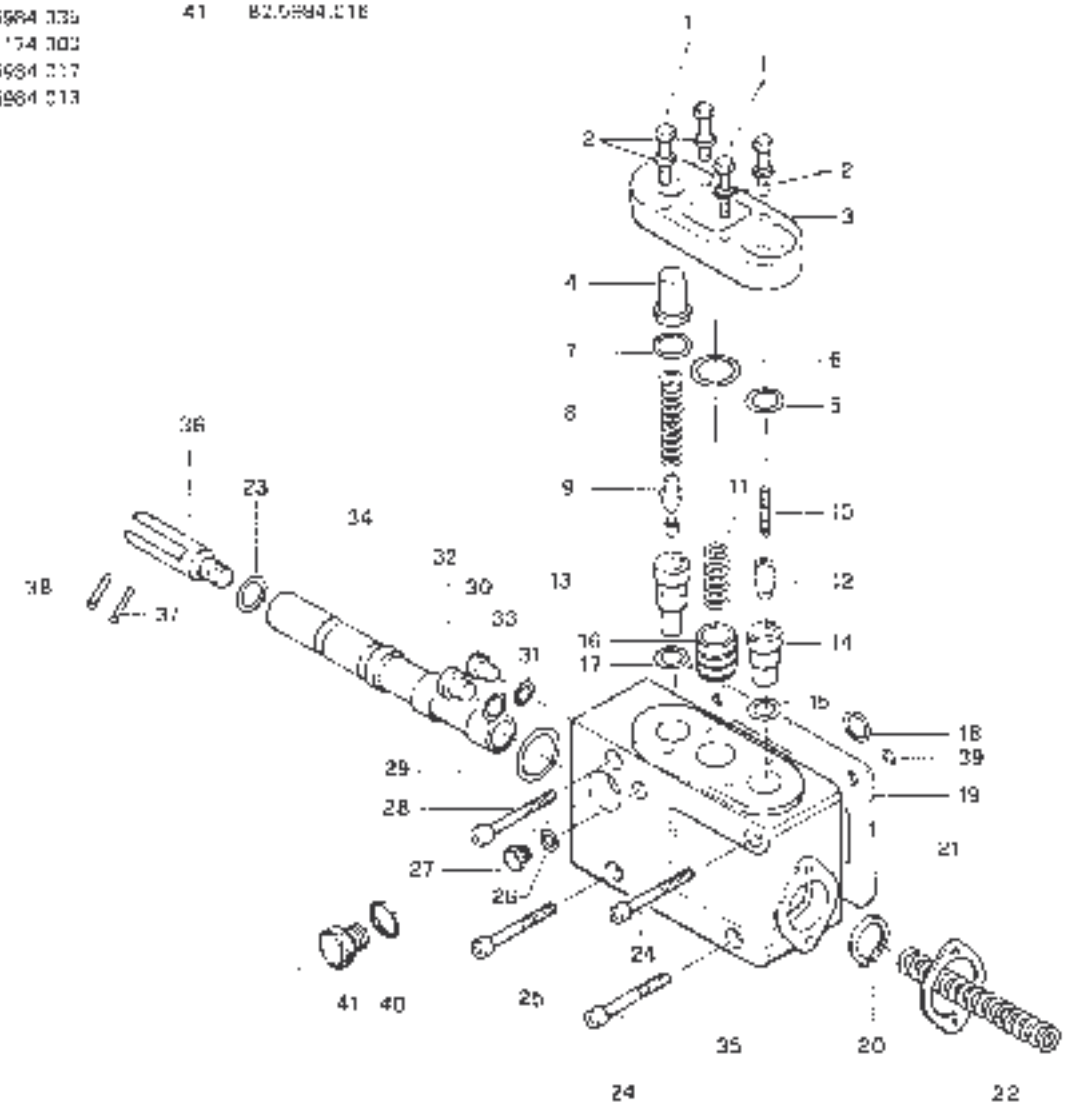


▲ FORNIRE SOLO ACCOPPIATI
▲ DELIVERED ONLY MATCHED
▲ FOURNIS SEULEMENT COUPLES
▲ LIEFERN PAAREN

H00532 | B

**N1**

| No. ORDIN. | | |
|---|---|---|
| 1 | 86 5030.010 | 86.5030 000 |
| 2 | 85 5030.020 | |
| 3 | 81.4747 020 | |
| 4 | 84.3892 050 | |
| 5 | 82 8020 020 | 828029 070 |
| 6 | 85 2095 000 | |
| 7 | 85 7004 000 | |
| 8 | 01 6146.000 | |