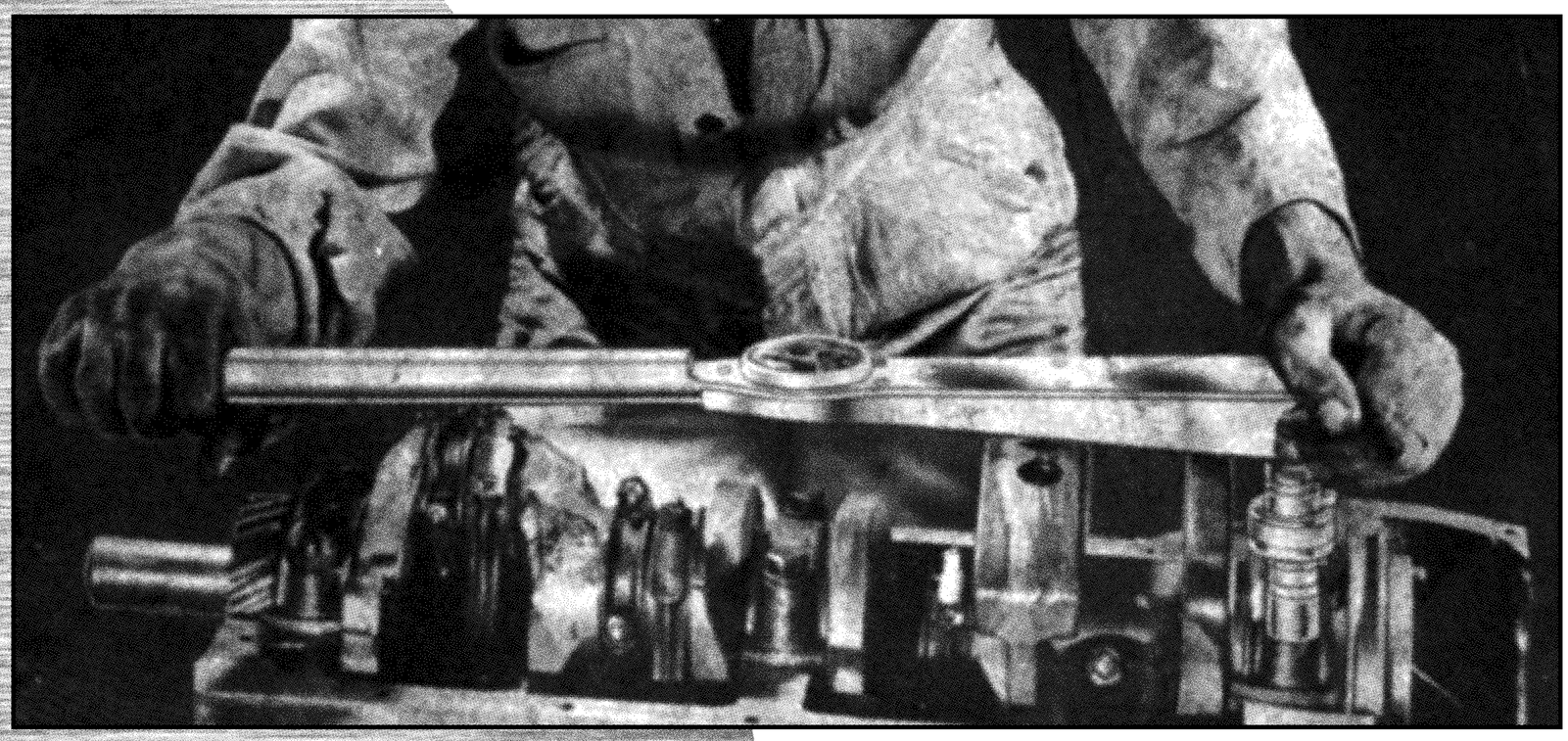

Leyland

Service Manual

245, 262, 272, 282, 462, 472 & 482

Service Manual

LEY-S-262+

https://tractormanualz.com/

NOTES

https://tractormanualz.com/

TRACTOR

MIDDLEWEIGHT RANGE

Repair operation manual

Q-CAB MODELS INCLUDING *SYNCHRO*

245/262/272/282/462/472/482

PUBLICATION PART No AKM 4019

4th EDITION ENGLISH 0280

https://tractormanualz.com/

Compiled and published by:

Technical Publications Department
Leyland Vehicles Limited
Leyland, Preston PR5 1SN
Lancashire, England

Sales — Service — Marketing:

Leyland Vehicles Limited
Sales and Marketing Headquarters
Guild Centre
Lords Walk
Preston PR1 1QY
Lancashire, England

Parts:

BL Components Limited
Unipart House
Cowley
Oxford OX4 2PG
England

USING THIS MANUAL

Layout

1. The manual layout is based on Repair Operation reference numbers, allocated from a Master Index, example:

TB12.13.01	**Camshaft — Remove and refit**
TB — — —	From Truck & Bus Master Index
— 12 — —	First digit pair (major assembly — Engine)
— — 13 —	Second digit pair (sub assembly or component) — Camshaft
— — — 01	Third digit pair (component and/or operation) remove and refit

2. Every operation in the manual has a reference number which is unique to that operation.
3. The manual is divided into groups indicated by the first digit pair, e.g. TB12 — Engine.
4. The following page lists the groups of the manual in numerical order.
5. Each group is preceded by a contents page listing the Repair Operations within that group in alphabetical order.

Page Numbers

1. The Repair Operation reference numbers are also used as page numbers.
2. The page numbers are in numerical order but there may be gaps in the numbering sequence. This is because the Master Index has been compiled for application to all vehicles manufactured by Leyland Truck and Bus.
3. Where more than one operation appears on the same page, a double page number is used, example:

   TB12.13.01
   TB12.13.07

   This indicates that these two operations, and any operations between these two numbers, will be found on that page.
4. Where one operation occupies more than one page, the page numbers are given a 'Sheet' suffix, example:

   First page — TB12.13.01 Sheet 1
   Second page — TB12.13.01 Sheet 2

https://tractormanualz.com/

AMENDMENTS

The pages herewith are new or amended and should be inserted in the Leyland Medium-Weight Q-Cab Tractor Repair Operation Manual AKM 4019.

To assist in identifying amendments on revised pages, two asterisks (**) are inserted at the beginning and end of the new or amended paragraph, operation, instruction or illustration.

To provide a record of amendments to this manual, this page is re-issued with each set of revised pages. The amendment number, date of issue, appropriate instructions and revised page numbers are quoted.

Insert revised pages in place of existing pages carrying the same number, and discard the old pages.

Where additional pages or complete major assembly groups are issued, insert new pages immediately following the existing pages carrying the next lowest number.

Date	Filing Instructions				Date	Filing Instructions			
	Discard	Ed.	Insert	Ed.		Discard	Ed.	Insert	Ed.
			Attach large synchro label to front of cover and small label to spine of cover			TB99–1	1	TB99–1	2
						TB99–2	1	TB99–2	2
3/78	Title page	1	Title page	2	10/78	Title page	2	Title page	3
	Contents page	1	Contents page	2		Contents page	2	Contents page	3
	TB04–1	1	TB04–1	2		TB01–1	1	TB01–1	3
	TB06–1	1	TB06–1	2		TB01–2	1	TB01–2	3
	TB33.25.19 TB33.30.04	1	TB35.25.19	2		TB01–3	1	TB01–3	3
	TB33.35.01 TB33.35.07	1	TB33.30.04 TB33.35.01	2		TB03–2	1	TB03–2	3
			TB33.35.07	2		TB04–1	1	TB04–1	3
	TB37 Complete gearbox section	1	TB37 Gearbox early models (5 x 2) Complete section	2		TB04–2	2	TB04–2	3
			TB37 – Gearbox – Synchro – Complete section	2		TB04–3	1	TB04–3	3
	TB51.20.45 Sheet 1	1	TB51.20.45 Sheet 1	2		TB06–1	1	TB06–1	3
	TB51.20.46	1	TB51.20.46	2		TB06–2	1	TB06–2	3
	TB51.35.24 Sheet 1 TB51.35.25 Sheet 1	1	TB51.35.24 Sheet 1 TB51.35.25 Sheet 1	2		TB09–2	1	TB09–2	3
	TB57.17.05 Sheet 1	1	TB57.17.05 Sheet 1	2		TB09–3	1	TB09–3	3
	TB57.17.05 Sheet 2	1	TB57.17.05 Sheet 2	2		TB10–2	1	TB10–2	3
	TB70.25.46 TB70.25.47	1	TB70.25.46 Sheet 1	2		TB10–3	1	TB10–3	3
	TB70.25.51	1	TB70.25.46 Sheet 2 TB70.25.51 Sheet 1	2		TB10–8	1	TB10–8	3
	TB70.25.52	1	TB70.25.51 Sheet 2 TB70.25.52	2		TB10–9	1	TB10–9	3
	TB70.30.25	1	TB70.30.25 TB70.30.26 Sheet 1	2		TB10–10	1	TB10–10	3
	TB70.30.26 TB70.30.33	1	TB70.30.26 Sheet 2 TB70.30.33 Sheet 1	2		TB10–11	1	TB10–11	3
	TB70.30.34 TB70.60.16	1	TB70.30.33 Sheet 2 TB70.60.16	2		TB10–12	1	TB10–12	3
			TB76.10.01 Sheet 4	2		TB10–13	1	TB10–13	3
			TB76.10.01 Sheet 5	2		TB10–14	1	TB10–14	3
			TB76.10.01 Sheet 6	2		TB10–15	1	TB10–15	3
			TB76.10.02 Sheet 7	2		TB10–16	1	TB10–16	3
			TB76.10.01 Sheet 8	2		TB10–17	1	TB10–17	3
			TB76.10.01 Sheet 9	2		TB10–18	1	TB10–18	3
						TB10–19	1	TB10–19	3
						TB10–20	1	TB10–20	3
						TB10–21	1	TB10–21	3
						TB10–22	1	TB10–22	3
						TB10–23	1	TB10–23	3
						TB10–24	1	TB10–24	3
						TB10–25	1	TB10–25	3
						TB10–26	1	TB10–26	3
						TB10–27	1	TB10–27	3
								TB10–28	3
								TB10–29	3
								TB12–Engine 245	
						TB12.29.19 Sheet 1	1	TB12.29.19 Sheet 1	3
						TB12.29.19 Sheet 2	1	TB12.29.19 Sheet 2	3
						TB12.41.01 TB12.49.01	1	TB12.41.01 TB12.49.01	3

https://tractormanualz.com/

AMENDMENTS – continued

Date	Filing Instructions			
	Discard	Ed.	Insert	Ed.
10/78	TB12.53.19 TB12.53.20	1	TB12.53.19 TB12.53.20	3
	TB12.60.02 TB12.60.26	1	TB12.60.02 TB12.60.26	3
	TB12.60.44 Sheet 1	1	TB12.60.44 Sheet 1	3
			TB12. Engine 262/272 462/472	
	TB12–1	1	TB12–1	3
	TB12.21.33 Sheet 5	1	TB12.21.33 Sheet 5	3
	TB12.29.19 Sheet 1	1	TB12.29.19 Sheet 1	3
	TB12.29.19 Sheet 2	1	TB12.29.19 Sheet 2	3
	TB12.29.55	1	TB12.29.55	3
	TB12.53.19 TB12.53.20	1	TB12.53.19 TB12.53.20	3
	TB12.60.57	1	TB12.60.57	3
	TB12.65.01 Sheet 2	1	TB12.65.01 Sheet 2	3
	TB19.30.07 Sheet 4	1	TB19.30.07 Sheet 4	3
	TB19.30.10 Sheet 1	1	TB19.30.10 Sheet 1	3
	TB19.30.10 Sheet 2 TB19.30.11	1	TB19.30.10 Sheet 2 TB19.30.11	3
	TB19.45.01	1	TB19.45.01	3
	TB19.45.05 TB19.45.09	1	TB19.45.05 TB19.45.09	3
	TB19.45.16 Sheet 2	1	TB19.45.16 Sheet 2	3
	TB19.50.07	1	TB19.50.07	3
	TB19.60.01 Sheet 2	1	TB19.60.01 Sheet 2	3
	TB33.10.01 Sheet 3	1	TB33.10.01 Sheet 3	3
	TB33.25.05 Sheet 2	1	TB33.25.05 Sheet 2	3
	TB33.25.13 TB33.25.15 Sheet 3	1	TB33.25.13 TB33.25.13 Sheet 3	3
	TB33.25.19	2	TB33.25.19 Gearbox 5 x 2	3
	TB37.20.04 Sheet 1	2	TB37.20.04 Sheet 1	3
	TB37.20.04 Sheet 5	2	TB37.20.04 Sheet 5	3
	TB37.20.06 Sheet 1	2	TB37.20.06 Sheet 1	3
	TB37.20.06 Sheet 2 TB37.23.07	2	TB37.20.06 Sheet 2 TB37.23.07	3
			Gearbox–Synchro	
	TB37–1	2	TB37–1	3
			TB37.12.04	3
			TB37.12.05 Sheet 1	3
			TB37.12.05 Sheet 2	3
	TB37.16.37	2	TB37.16.37	3
	TB37.16.40 Sheet 1	2	TB37.16.40 Sheet 1	3
	TB37.16.40 Sheet 2	2	TB37.16.40 Sheet 2	3
			TB37.16.40 Sheet 3	3
			TB37.16.40 Sheet 4	3
	TB37.20.04 Sheet 1	2	TB37.20.04 Sheet 1	3
	TB37.20.04 Sheet 2	2	TB37.20.04 Sheet 2	3
	TB37.20.04 Sheet 3	2	TB37.20.04 Sheet 3	3
	TB37.20.04 Sheet 5	2	TB37.20.04 Sheet 5	3
			TB37.20.04 Sheet 6	3
			TB37.20.04 Sheet 7	3
			TB37.20.04 Sheet 8	3
			TB37.20.04 Sheet 9	3
10/78			TB37.20.04 Sheet 10	3
	TB51.20.47 TB51.28.48 Sheet 1	1	TB51.20.47 TB51.28.48 Sheet 1	3
	TB51.20.48 Sheet 3	1	TB51.20.48 Sheet 3	3
	TB53.20.06 TB53.20.10	1	TB53.20.06 TB53.20.10	3
	TB54 complete front axle section	1	TB54 complete front axle–two-wheel drive section	3
			TB54 complete front axle–four-wheel drive section	3
	TB57–1	1	TB57–1	3
	TB57.15.19 Sheet 1	1	TB57.15.19 Sheet 1	3
	TB57.15.19 Sheet 2	1	TB57.15.19 Sheet 2	3
	TB57.19.01 Sheet 2	1	TB57.19.01 Sheet 2	3
	TB57.19.03 Sheet 3	1	TB57.19.03 Sheet 3	3
	TB57.19.05 Sheet 2	1	TB58.19.05 Sheet 2	3
	TB57.28.11	1	TB57.28.01 TB57.28.11	3
	TB57.28.12 TB57.28.13	1	TB57.28.12 TB57.28.13	3
	TB57.28.14	1	TB57.28.14	3
	TB57.28.19	1	TB57.28.19	3
	TB70.25.46 Sheet 1	2	TB70.25.46 Sheet 1	3
	TB70.30.24	1	TB70.30.24	3
	TB70.30.25 TB70.30.26 Sheet 1	2	TB70.30.25 TB70.30.26 Sheet 1	3
	TB70.30.26 Sheet 2 TB70.30.33 Sheet 1	2	TB70.30.26 Sheet 2 TB70.30.33 Sheet 1	3
	TB70.30.33 Sheet 2 TB70.60.16	2	TB70.30.33 Sheet 2 TB70.60.16	3
	TB76.10.01 Sheet 7	2	TB76.10.01 Sheet 7	3
	TB76.10.01 Sheet 8	2	TB76.10.01 Sheet 8	3
	TB86.10.01	1	TB86.10.01	3
	TB86.10.02 Sheet 2	1	TB86.10.02 Sheet 2	3
	TB86.10.08 Sheet 1	1	TB86.10.08 Sheet 1	3
	TB86.70.07 Sheet 2 TB86.70.08	1	TB86.70.07 Sheet 2 TB86.70.08	3
	TB99–1	2	TB99–1	3
	TB99–2	2	TB99–2	3
02/80	Title-page	3	Title-page	4
	Contents page	3	Contents page	4
	TB01—4	1	TB01-4	4
	TB03—1	1	TB03—1	4
	TB03-2	3	TB03—2	4
	TB04—1	3	TB04—1	4
	TB04—2	3	TB04—2	4
	TB04—3	3	TB04—3	4
	TB06—1	3	TB06—1	4
	TB06—2	3	TB06—2	4
	TB06—3	3	TB06—3	4
	TB09—1	3	TB09—1	4

https://tractormanualz.com/

AMENDMENTS — continued

Date	Filing Instructions				Date	Filing Instructions			
	Discard	Ed.	Insert	Ed.		Discard	Ed.	Insert	Ed.
02/80	TB09—2	3	TB09—2	4		TB26.40.03 Sheet 2	1	TB26.40.03 Sheet 2	4
	TB09—3	3	TB09—3	4		TB26.45.01	1	TB26.45.01	4
	TB10—3	3	TB10—3	4		TB26.50.01 Sheet 2	1	TB26.50.01 Sheet 2	4
	TB10—6	1	TB10—6	4		TB26.50.06 Sheet 2	1	TB26.50.06 Sheet 2	4
	TB10—7	1	TB10—7	4		TB30.15.02	1	TB30.15.02	4
	TB10—8	3	TB10—8	4		TB30.15.10	1	TB30.15.10	4
	TB10—9	3	TB10—9	4				TB30.15.16	4
	TB10—11	3	TB10—11	4				TB30.15.17 Sheet 1	
	TB10—12	3	TB10—12	4				TB30.15.17 Sheet 2	4
	TB10—13	3	TB10—13	4				TB30.15.17 Sheet 3	4
	TB10—14	3	TB10—14	4		TB33.10.01 Sheet 1	1	TB33.10.01 Sheet 1	4
	TB10—15	3	TB10—15	4		TB33.10.01 Sheet 3	3	TB33.10.01 Sheet 3	4
	TB10—16	3	TB10—16	4		TB33.10.01 Sheet 4	1	TB33.10.01 Sheet 4	4
	TB10—17	3	TB10—17	4		TB33.10.01 Sheet 6	1	TB33.10.01 Sheet 6	4
	TB10—18	3	TB10—18	4		TB33.20.01	1	TB33.20.01	4
	TB10—19	3	TB10—19	4		TB33.20.07 Sheet 1		TB33.20.07 Sheet 1	
	TB10—20	3	TB10—20	4				Gearbox 5 x 2	
	TB10—21	3	TB10—21	4		TB37.20.04 Sheet 2	2	TB37.20.04 Sheet 2	4
	TB10—22	3	TB10—22	4		TB37.20.04 Sheet 5	3	TB37.20.04 Sheet 5	4
	TB10—23	3	TB10—23	4				Gearbox—Synchro	
	TB10—24	3	TB10—24	4		TB37.16.37	3	TB37.16.37	4
	TB10—25	3	TB10—25	4		TB37.16.40 Sheet 2	3	TB37.16.40	4
	TB10—26	3	TB10—26	4		TB37.20.04 Sheet 1	3	TB37.20.04 Sheet 1	4
	TB10—27	3	TB10—27	4		TB37.20.04 Sheet 2	3	TB37.20.04 Sheet 2	4
	TB10—28	3	TB10—28	4		TB37.20.04 Sheet 3	3	TB37.20.04 Sheet 3	4
	TB10—29	3	TB10—29	4		TB37.20.04 Sheet 4	2	TB37.20.04 Sheet 4	4
			TB10—30	4		TB37.20.04 Sheet 5	3	TB37.20.04 Sheet 5	4
			TB10—31	4		TB37.20.04 Sheet 6	3	TB37.20.04 Sheet 6	4
	TB12 complete 245 engine section	1	TB12 complete engine section —Perkins D3.152	4		TB37.20.04 Sheet 7	3	TB37.20.04 Sheet 7	4
						TB37.20.04 Sheet 8	3	TB37.20.04 Sheet 8	4
						TB37.20.04 Sheet 9	3	TB37.20.04 Sheet 9	4
	TB12 complete 262/272 engine section	3	TB12 complete engine section —Leyland 4/98			TB37.20.04 Sheet 10	3	TB37.20.04 Sheet 10	4
						TB51.20.45 Sheet 1	2	TB51.20.45 Sheet 1	4
						TB51.20.45 Sheet 2	2	TB51.20.45 Sheet 2	4
	TB19.20.06	1	TB19.20.06	4				TB51.20.46 Sheet 1	
	TB19.20.32		TB19.20.32			TB51.20.46 Sheet 2	2	TB51.20.46 Sheet 2	4
	TB19.25.07	1	TB19.25.07	4		TB51.20.47	3	TB51.20.47	4
	TB19.25.10		TB19.25.10			TB51.20.48 Sheet 1		TB51.20.48 Sheet 1	
	TB19.30.07 Sheet 3	3	TB19.30.07 Sheet 3	4		TB53—1	1	TB53—1	4
	TB19.30.10 Sheet 1	3	TB19.30.10 Sheet 1	4		TB53.00.07	1	TB53.00.07	4
	TB19.30.10 Sheet 2	3	TB19.30.10 Sheet 2	4		TB53.00.08	1	TB53.00.08	4
	TB19.30.11		TB19.30.11			TB53.00.09	1	TB53.00.09	4
	TB19.45.01	3	TB19.45.01	4		TB53.00.10	1	TB53.00.10	4
	TB19.45.05	3	TB19.45.05	4		TB53.00.11	1	TB53.00.11	4
	TB19.45.09		TB19.45.09			TB53.00.12	1	TB53.00.11	4
	TB19.45.16 Sheet 2	3	TB19.45.16 Sheet 2	4		TB53.10.01 Sheet 1	1	TB53.10.01 Sheet 1	4
	TB19.50.07	3	TB19.50.07	4		TB53.10.03 Sheet 1		TB53.10.03 Sheet 1	
	TB19.60.01 Sheet 2	3	TB19.60.01 Sheet 2	4		TB53.10.01 Sheet 2	1	TB53.10.01 Sheet 2	4
	TB26.20.09	1	TB26.20.09	4		TB53.10.03 Sheet 2		TB53.10.03 Sheet 2	
	TB26.20.10	1	TB26.20.10	4		TB53.15.01 Sheet 1	1	TB53.15.01 Sheet 1	4
			TB26.30.22 Sheet 1			TB53.15.01 Sheet 2	1	TB53.15.01 Sheet 2	4
	TB26.30.07	1	TB26.30.07 Sheet 2	4		TB53.15.01 Sheet 3	1	TB53.15.01 Sheet 3	4
	TB26.30.46		TB26.30.46			TB53.15.06		TB53.15.06	
						TB53.15.12	1	TB53.15.12	4
								TB53.15.13	

https://tractormanualz.com/

AMENDMENTS — continued

Date	Filing Instructions				Date	Filing Instructions			
	Discard	Ed.	Insert	Ed.		Discard	Ed.	Insert	Ed.
02/80			TB53.15.14 Sheet 1	4					
			TB53.15.14 Sheet 2	4					
	TB53.15.15	1	TB53.15.15	4					
	TB53.15.16 Sheet 1	1	TB53.15.16 Sheet 1	4					
	TB53.15.16 Sheet 2	1	TB53.15.16 Sheet 2	4					
			TB53.15.16 Sheet 3						
			TB53.15.16 Sheet 4						
	TB53.15.19 Sheet 1	1	TB53.15 19 Sheet 1	4					
	TB53.15.19 Sheet 2 TB53.15.20	1	TB53.15.19 Sheet 2	4					
			TB53.15.19 Sheet 3	4					
			TB53.15.19 Sheet 4 TB53.15.20	4					
	TB53.15.31 TB53.20.02	1	TB53.15.31 TB53.15.40	4					
	TB53.20.04 TB53.20.05	1	TB53.15.41 TB53.20.02	4					
	TB53.20.06 TB53.20.10	3	TB53.20.04 TB53.20.05	4					
	TB53.30.09	1	TB53.20.06 TB53.20.10	4					
			TB53.30.09	4					
	Front axle—four-wheel-drive								
	TB54—1	3	TB54—1	4					
			TB54.10.01 TB54.10.13	4					
			TB54.10.14 TB54.10.15	4					
	TB54.15.02 Sheet 1 TB54.15.13 Sheet 1	3	TB54.15.02 Sheet 1 TB54.15.13 Sheet 1	4					
	TB54.15.02 Sheet 2 TB54.15.13 Sheet 2	3	TB54.15.02 Sheet 2 TB54.15.13 Sheet 2	4					
	TB54.35.01 Sheet 1 TB54.35.07 Sheet 1	3	TB54.35.01 Sheet 1 TB54.35.07 Sheet 1	4					
	TB54.35.01 Sheet 3 TB54.35.07 Sheet 3	3	TB54.35.01 Sheet 3 TB54.35.07 Sheet 3	4					
	TB57.28.15 Sheet 1	1	TB57.28.15 Sheet 1	4					
	TB57.28.15 Sheet 2	1	TB57.28.15 Sheet 2	4					
	TB70.20.01	1	TB70.20.01	4					
	TB70.25.51 Sheet 2 TB70.25.52	2	TB70.25.51 Sheet 2 TB70.25.52	4					
	TB70.30.26 Sheet 2 TB70.30.33 Sheet 1	3	TB70.30.33	4					
	TB76.10.01 Sheet 1		TB76.10.01 Sheet 1	4					
	TB76.10.01 Sheet 7	3	TB76.10.01 Sheet 7	4					
	TB80.10.16	1	TB80.10.16	4					
	TB86.10.02 Sheet 2	3	TB86.10.02 Sheet 2	4					
	TB88.30.23 TB88.30.24	1	TB88.30.23	4					
	TB88.30.38	1	TB88.30.24 TB88.30.38	4					
	TB99—1	3	TB99—1	4					
	TB99—2	3	TB99—2	4					

https://tractormanualz.com/

CONTENTS

Introduction TB01–1

Abbreviations and Symbols TB01–3

Conversion Factors TB01–4

General Precautions TB03

General Specification Data TB04

Torque Tightening Figures TB06

Recommended Lubricants, Fluids and Capacities TB09

Maintenance TB10

**Engine — Perkins D3,152
Engine — Leyland 4/98 ** TB12

Fuel System TB19

Cooling System TB26

Induction and Exhaust System TB30

Clutch TB33

Gearbox — Early Models (5X 2)
Gearbox — Synchro Two-Wheel Drive
Gearbox — Synchro Four-Wheel Drive TB37

Rear Axle TB51

Hydraulic Equipment TB53

Front Axle — Two-Wheel Drive
Front Axle — Four-Wheel Drive TB54

Steering TB57

Brakes TB70

Body/Cab and Frame TB76

Heating and Ventilation TB80

Windscreen Wipers and Washers TB84

Electrical TB86

Instruments TB88

Service Tools TB99

https://tractormanualz.com/

NOTES

https://tractormanualz.com/

ABBREVIATIONS AND SYMBOLS

Across flats (bolt size)	A.F.
After bottom dead centre	A.B.D.C.
After top dead centre	A.T.D.C.
Alternating current	a.c.
Ampere	A
Ampere-hour	Ah
Atmosphere	atm.
Before bottom dead centre	B.B.D.C.
Before top dead centre	B.T.D.C.
Bottom dead centre	B.D.C.
Brake horse power	bhp
Brake mean effective pressure	b.m.e.p.
British Standard	B.S.
Centimetre	cm
Centimetres of mercury	cmHg
Cubic centimetre	cm^3
Cubic inch	in^3
Cycles per minute	c/min
Degree (angle)	°
Degree – Celsius (Centigrade)	°C
Diameter	dia.
Direct current	d.c.
Fahrenheit	F
Fifth	5th
Figure (illustration)	Fig.
First	1st
Foot	ft
Fourth	4th
**Four-wheel Drive	4WD**
Gallon (Imperial)	gal
Gallon (U.S.)	U.S. gal
Gramme (force)	gf
Gramme (mass)	g
Gross train weight	g.t.w.
Gross vehicle weight	g.v.w.
High compression	h.c.
High tension (electrical)	h.t.
Horse-power	hp
Hour	h
Independent power take off	I.P.T.O.
Inch	in
Inches of mercury	inHg
Internal diameter	i.dia.
Kilogramme (force)	kgf
Kilogramme (mass)	kg
Kilogramme centimetre	kgf cm
Kilogramme metre	kgf m
Kilogramme per square centimetre	kgf/cm^2
Kilometre	km
Kilometre per hour	km/h
Kilonewton per square metre	kN/m^2
Kilovolt	kV
Kilowatt	kW
King pin inclination	k.p.i.
Left-hand	L.H.
Left-hand drive	L.H.D.
Litre	l
Low compression	l.c.
Low tension	l.t.
Maximum	max.
Metre	m
Microfarad	μF
Mile per gallon	mile/gal
Miles per hour	mile/h
Millimetre	mm
Millimetres of mercury	mmHg
Minimum	min.
Minus (of tolerance)	–
Minute (of angle)	'
Minute (time)	min
Negative (electrical)	–
Newton	N
Newton metre	Nm
Number	No.
Ohm	Ω
Ounce (force)	ozf
Ounce (mass)	oz
Ounce inch (torque)	ozf in
Outside diameter	o.dia.
Overdrive	O/D
Paragraph	para.
Part Number	Part No.
Percent	%
Pint (Imperial)	pt
Pint (U.S.)	U.S. pt
Plus or minus	±
Plus (tolerance)	+
Positive (electrical)	+
Pound (force)	lbf
Pound (mass)	lb
Pound foot (torque)	lbf ft
Pound inch (torque)	lbf in
Pound per square inch	lbf/in^2
Power take-off	P.T.O.
Radius	r
Ratio	:
Revolution per minute	rev/min
Right-hand	R.H.
Right-hand drive	R.H.D.
Second (angle)	''
Second (numerical order)	2nd
Second (time)	s
Society of Automobile Engineers	S.A.E.
Specific gravity	sp. gr.
Square centimetre	cm^2
Square inch	in^2
Standard wire gauge	s.w.g.
Temperature	temp.
Third	3rd
Tonne	t
Top dead centre	T.D.C.
**Two-wheel Drive	2WD**
United Kingdom	UK
Volt	V
Volume	vol.
Watt	W
Weight	wt
Screw threads	
American Standard Taper pipe	N.P.T.F.
British Association	B.A.
British Standard Fine	B.S.F.
British Standard Pipe	B.S.P.
British Standard Whitworth	B.S.W.
Metric	m
Unified Coarse	U.N.C.
Unified Fine	U.N.F.

https://tractormanualz.com/

CONVERSION FACTORS

Length

1 millimetre	=	0.0394 inch	1 inch	=	25,4 millimetres
1 metre	=	3.280 feet	1 foot	=	304,8 millimetres
1 metre	=	1.094 yards	1 yard	=	0,914 metre
1 kilometre	=	0.621 mile	**1 mile	=	1,609 kilometres**

Area

1 square centimetre	=	0.155 square inch	1 square inch	=	6,452 square centimetres
1 square metre	=	10.764 square feet	1 square foot	=	929,03 square centimetres
1 square metre	=	1.196 square yards	1 square yard	=	0,836 square metre
1 square kilometre	=	0.386 square mile	1 square mile	=	2,59 square kilometres

Volume

1 cubic centimetre	=	0.061 cubic inch	1 cubic inch	=	16,387 cubic centimetres
**1 cubic metre	=	35.315 cubic feet**	1 cubic foot	=	0,0283 cubic metre
1 cubic metre	=	1.308 cubic yards	1 cubic yard	=	0,7646 cubic metre

Capacity

1 litre	=	1.760 Imperial pints	1 Imperial pint	=	0,568 litre
1 litre	=	2.10 U.S. pints	1 U.S. pint	=	0,476 litre
1 litre	=	0.22 Imperial gallon	1 Imperial gallon	=	4,546 litres
1 litre	=	0.264 U.S. gallon	1 U.S. gallon	=	3,80 litres

Mass

1 gramme	=	0.035 ounce	1 ounce	=	28,35 grammes
1 kilogramme	=	2.205 pounds	1 pound	=	453,6 grammes
1 tonne	=	0.984 ton	1 hundredweight	=	50,8 kilogrammes
			1 ton	=	1,016 tonnes

Moment of Force (Torque)

1 kilogramme centimetre	=	0.87 pound inch	1 pound inch	=	1,15 kilogramme centimetre
1 kilogramme metre	=	7.23 pound foot	1 pound foot	=	0,138 kilogramme metre
1 newton metre	=	0.737 pound foot	1 pound foot	=	1,35 newton metre

Pressure

1 kilogramme per square centimetre	=	14.22 pounds per square inch	1 pound per square inch	=	0,0703 kilogramme per square centimetre
1 kilonewton per square metre	=	0.146 pound per square inch	1 pound per square inch	=	6,89 kilonewtons per square metre

Power

1 kilowatt	=	1.341 horse-power	1 horse-power	=	0,746 kilowatt

Force

1 newton	=	0.224 lbf	1 lbf	=	4,448 newton

https://tractormanualz.com/

Safety precautions — operating

Read all handbook instructions carefully and make yourself familiar with the controls before using the tractor.

Always keep all controls properly adjusted.

Always link the independent brakes when driving on the road, over very rough ground, or near obstructions or ditches.

Never drive at speed with implements in the raised position.

Never drive the tractor close the edge of a ditch or bank, especially if the ground is loose or wet.

Never consolidate a silage or manure heap with a tractor unless the sides of the heap are adequately supported.

Never allow anyone to ride on the tractor unless legally permitted and on a seat provided for the purpose.

Safety precautions are equally essential for implements and equipment used on the tractor. Read carefully the instructions issued by the manufacturer of the implement or equipment.

Always operate implements and equipment at the speeds recommended by their manufacturers.

Never attach a trailed implement to the hitch point of the top link.

The differential lock is provided for use on slippery surfaces. It must not be used on the road if strakes or other forms of spiked wheels are fitted.

Do not use maximum speed when cornering, over rough ground, or when using the steering brakes.

Avoid sudden braking when hauling a trailer, particularly on bends or slippery surfaces.

When working across slopes, avoid bumps and hollows which may cause the tractor to be tilted to a dangerous degree. Use the widest permissible track setting.

When climbing steep gradients, do not open the throttle rapidly. Do not engage the clutch violently.

When work on steep gradients or with heavy rear-mounted implements is anticipated, fit suitable front end weights.

Should the front wheels show signs of lifting (indicated by loss of steering control), depress the clutch. If this is necessary, more than the designed drawbar pull is being imposed. Lighten the load and ensure that the hitch point is not higher than it should be.

Never start the engine from any position other than sitting in the driving seat.

Never dismount while the vehicle is in motion. Stop the engine and apply the hand brake before leaving the vehicle.

Never adjust, clean, or lubricate the tractor while it is in motion or if the engine is running.

Never make adjustments to P.T.O.-driven implements while the engine is running, even with the P.T.O. clutch disengaged.

Never run the engine in an enclosed building or allow the exhaust pipe near to inflammable material.

Never fill the tank with the engine running; exercise caution when the engine is hot.

When using a tractor-mounted winch ensure that the tractor is in line with the direction of pull.

Ensure that all guards are in position when operating the tractor.

Always keep the floor plates and controls clean.

Check the tyre pressure frequently.

Never wear loose clothing when operating P.T.O.-driven implements.

Safety precautions — maintaining or repairing

** **WARNING:** When towing a tractor, the range-change gear lever must be engaged in 'HIGH' and the synchro-mesh road speed gear lever left in 'NEUTRAL'. This prevents oil starvation to the mainshaft centre bearing and range gear bushes, to which damage and possible seizure may occur.**

Always disconnect the earth lead from the battery negative (—) terminal when working on the tractor.

Wear protective overalls, and use protective barrier creams when necessary.

Ensure the tractor is on level ground when being lifted or jacked up. Apply the hand brake and chock the wheels.

Never rely on a jack as the sole means of support when working beneath the tractor. Place additional safety supports beneath the tractor.

Never work underneath a raised implement without ensuring that the rocker shaft locking plunger is engaged and some other suitable support is provided between the implement and the ground.

Always place jacks and safety supports under the tractor at points of adequate strength.

Ensure that any lifting apparatus has adequate load capacity for the work in hand.

Do not leave tools, lifting equipment, spilt oil etc., around or on the work area.

Do not remove the radiator cap when the engine is hot.

Do not use a naked light when checking the electrolyte levels.

** Do not inhale the dust from clutch or brake dry linings, or use an air line to blow the dust from the units; remove the dust using a damp cloth or vacuum cleaner.**

https://tractormanualz.com/

Brake and Clutch hydraulics

WARNING: It is imperative that the correct brake fittings are used. The threads of components must be compatible.

Containers for hydraulic fluid must be kept absolutely clean. Do not store hydraulic fluid in an unsealed container, it will absorb water, and fluid in this condition would be dangerous to use.

Do not allow hydraulic fluid to be contaminated with mineral oil, or use a container which has previously contained mineral oil.

Do not re-use fluid bled from the system.

Always use clean brake fluid or a recommended alternative to clean hydraulic components.

Fit a blanking cap to a hydraulic union and a plug to its socket after removal to prevent the ingress of dirt.

Absolute cleanliness must be observed with hydraulic components at all times.

Precautions against damage

Clean engine compartment of chaff and spilled oil or fuel to prevent a possible fire risk.

Use only the recommended lubricants and fluids.

Always use the correct proportion of anti-freeze in the coolant to protect against corrosion as well as freezing. In warm climates when no anti-freeze is available the cooling system must be protected against corrosion by the addition of a corrosion inhibitor to the coolant.

Radiator anti-freeze must not be used in ballasted tyres, nor calcium chloride in the cooling system.

Do not tow the tractor in gear to bleed the fuel system or damage to the injection pump will result.

Avoid spilling brake fluid or battery acid on paintwork; wash off with water immediately this occurs.

Do not run the engine with the air filter removed.

Maintain all parts clean whilst they are dismantled. Fuel, brake, clutch, steering and hydraulic systems must be protected against the ingress of dirt while the pipes or unions are disconnected.

Do not use degreasing equipment for assemblies containing items (e.g. rubber seals and O-rings) which could be damaged by the use of this process.

Do not weaken the cab structure by modification or by fitting parts not specified by the manufacturer. The cab is designed to conform to strict regulations to protect the operator; damage or deterioration of the cab will cause these regulations to be infringed.

SERVICE PRECAUTIONS FOR A.C. CHARGING SYSTEMS

Alternator polarity. Ensure that the correct battery polarity is maintained at all times. Reversed battery or charger connections will damage the alternator rectifiers.

Battery connections. The battery must never be disconnected while the engine is running.

Testing semi-conductor devices. Never use an ohmmeter of the type incorporating a hand-driven generator for checking the rectifiers or the transistors.

Electric welding. If arc-welding is to be carried out on the vehicle, the alternator must be disconnected.

Frost precautions

Always use the correct proportion of anti-freeze in the coolant to protect against corrosion as well as freezing. When anti-freeze is not necessary, the cooling system must be protected against corrosion by the addition of a corrosion inhibitor to the coolant.

If anti-freeze solution is not used and the vehicle is to stand in the open with temperatures approaching freezing point, the cooling system must be completely drained and a notice stating 'Cooling System Drained' displayed on the steering wheel or other conspicuous position.

Vehicles with anti-freeze mixture in the cooling system should have a notice displayed stating 'Anti-freeze. Do Not Drain'.

WARNING: Anti-freeze contains toxic chemicals (ethylene glycol) which must NOT be swallowed or allowed to come into skin contact. Use impervious protective clothing and gloves when handling anti-freeze.

In the event of slight skin contact, thoroughly rinse the affected area with water. If there is excessive skin contact or ingestion, seek medical advise immediately.

https://tractormanualz.com/

****Engine — Perkins D3.152****

Max. power (to BS AU 141a)	34,9 kW (47 bhp) at 2 250 rev/min
Max. torque	173,6 Nm (17,7 kgf m, 128 lbf ft) at 1 300 rev/min
Number of cylinders	3
Bore	91,4 mm (3.6 in)
Stroke	127 mm (5 in)
Capacity	2,5 litres (152 in^3)
Compression ratio	18.5 : 1
Injection order	1, 2, 3

****Engine — Leyland 4/98**

Type: 262/462	4/98 DT
272/472	4/98 NT
282/482	4/98 TT
Max. power (to BS AU 141a): 4/98 DT	46,25 kW (62 bhp) at 2 200 rev/min
4/98 NT	53,7 kW (72 bhp) at 2 200 rev/min
4/98 TT	66,1 kW (82 bhp) at 2 200 rev/min
Max. torque: 4/98 DT	223,8 Nm (23,2 kgf m, 165 lbf ft) at 1 200 rev/min
4/98 NT	257,7 Nm (26,3 kgf m, 190 lbf ft) at 1 200 rev/min
4/98 TT	291,4 Nm (29,7 kgf m, 215 lbf ft) at 1600 rev/min**
Number of cylinders	4
Bore	98 mm (3.86 in)
Stroke	125 mm (4.92 in)
Capacity	3,77 litres (230 in^3)
** Compression ratio	17.8: 1 (262/462) 16.8: 1 (272/282/472/482)**
Injection order	1, 3, 4, 2

Fuel system – 245

Injection pump type	C.A.V. – D.P.A. distributor type with mechanical governor
Injector type	C.A.V.
Injector pressure	170 atmospheres
Injection timing (static)	24° B.T.D.C.

****Fuel system — Leyland 4/98**

Injection pump type: 4/98 DT/TT	C.A.V. — D.P.A. distributor type with mechanical governor and manual start retard
4/98 NT	C.A.V. — D.P.A. distributor type with mechanical governor and manual start retard. (Or Simms Minimex in-line pump is available in some countries)**
Injector type	C.A.V.
** Injection pressure: 4/98 DT	75 atmospheres
4/98 NT	175 atmospheres
4/98 TT	200 atmospheres
Injection timing (static): 4/98 DT	12° B.T.D.C.
4/98 NT/TT**	14° B.T.D.C. (Simms Minimex pump 16° B.T.D.C.)**

Clutch

Type	Double clutch with twin independent dry friction plates
	279 mm (11 in) diameter
Primary (transmission)	Hydraulic actuation
Secondary (I.P.T.O.)	Mechanical actuation

Gearbox – early models (5 x 2)

Speeds	10 forward, 2 reverse
Type	Straight spur sliding mesh

Gearbox — synchro — two-wheel drive and four-wheel drive

Speeds	9 forward, 3 reverse
Range change	Straight spur — sliding mesh
Gear change	Straight spur — synchromesh

https://tractormanualz.com/

Power take-off	
Type	Independent
Location	Central, at rear of tractor
Height above ground level: 245	650 mm (25.6 in) with standard tyres
262/462	752 mm (29.6 in) with standard tyres
272/472	775 mm (30.5 in) with standard tyres
**282/482	787 mm (31 in) with standard tyres**
Number of splines	6
Rotation	Clockwise viewed from rear
Shaft diameter	34,9 mm (1.375 in) S.A.E. standard
****Steering — two-wheel-drive models****	
Type	Hydrostatic power steering
Number of turns of steering wheel lock to lock	3,7 turns with engine running
Camber angle	4°
Castor angle	0°
King-pin inclination	9°
**Toe-in	3,2 mm (0.125 in)**
****Steering — four-wheel-drive**	
Type	Hydrostatic power steering
Toe-in	0 to 10 mm (0 to 0.39 in)**
Hydraulics	
Type	Live, providing position control, draught control and auxiliary services
Implement draught control	Double-acting top link
Pump	Gear type
Maximum lifting capacity: 245	1700 kg (3750 lb)
**All models except 245	1814 kg (4000 lb)—without assistor cylinder 2358 kg (5200 lb)—with assistor cylinder**
Electrical	
Earth polarity	Negative (—)
**Battery: 245	12 volt, 95 Ah
All models except 245	12 volt, 128 Ah**
Alternator	Lucas 16ACR and 17ACR
Starter: 245	Lucas M45G
All models except 245	Lucas M50
Starting aid (standard with 245 only)	'Thermostart' element in inlet manifold
Horn	Lucas 12 volt type 6H
Wiper motor	AC-Delco 12 volt, 2 speed
Lamps	*Watts*
Head	35/35
Side	5
Licence plate	6
Panel (capless)	3
Plough (sealed beam unit)	35
Stop/tail	21/5
Indicators	21
Interior	21
Wheel equipment	
Front tyres (standard): 245	5.50—16, 4 ply
262/272/282	7.50—16, 6 ply
Rear tyres (standard): 245	11—28, 6 ply
262	11—36, 6 ply
272	12—36, 6 ply
**282	14—34, 6 ply**

https://tractormanualz.com/

		Rear	Front
462	standard	11 X 36	11 X 24
	optional	12 X 36	10X28
	optional	14 X 30	11 X 24
472	standard	12 X 36	10 X 28
	optional	12 X 38	11 X 28
	optional	14 X 34	11 X 28
	optional	15 X 30	10 X 28
	optional	14 X 30	11 X 24
**482	standard	14 X 34	11 X 28
	optional	See 472 standard and optional tyres**	

Brakes

Type	Dry multi-plate discs
Location	On final drive pinion shafts
Operation	Hydraulic; independent pedals may be used to assist steering or over-ridden by a self-balancing single pedal
Parking	Hand lever with ratchet operating both brakes

Belt pulley (if fitted)

Location	Rear of tractor
Rotation	Clockwise (viewed from left-hand side)
Diameter	229 mm (9 in)
Width	165 mm (6.5 in) for 152 mm (6 in) belt

https://tractormanualz.com/

TORQUE TIGHTENING FIGURES

	Nm	kgf m	lbf ft
****Engine — Perkins D3.512****			
Cylinder head nuts/setscrews	102	10,4	75
Connecting rod nuts (plain)	95	9,7	70
Connecting rod nuts (cadmium plated)	61	6,2	45
Main bearing setscrews	157	16	115
Idler gear retaining setscrews	68	6,9	50
Camshaft gear retaining setscrews	28	2,9	21
Balance weight setscrews	75	7,6	55
Flywheel setscrews	108	11	80
Atomiser securing nuts	16	1,7	12
Crankshaft pulley retaining setscrew with 4,8 mm ($\frac{3}{16}$ in) thick washer	149	15,2	110
Engine to clutch housing bolts	37	3,7	27
Front frame to sump bolts and setscrews	230	23,5	170
****Engine — Leyland 4/98****			
Big-end bolts	82	8,3	60
**Crankshaft nut	271	27,7	200
Main bearing nuts	163	16,6	120
Main bearing bolts	258	263	190
Cylinder head nuts:			
Prior to engine no's. 4/98 DT-11155 or 4/98 NT-56730	136	13,8	100
All later engines including 4/98 TT	149	15,2	110
Rocker shaft brackets: $\frac{5}{16}$ in bolts	23	2,3	17**
$\frac{3}{8}$ in bolts	40	4,1	30
Flywheel securing bolts	136	13,8	100
Oil filter bowl bolt	12 to 13	1,2 to 1,3	9 to 10
Oil pump drive shaft nut	102	10,4	75
Front mounting bracket to timing cover bolts	40 to 46	4 to 4,6	30 to 35
Injector securing bolts	16	1,7	12
**Exhaust manifold nuts	41	4,1	30
Inlet manifold bolts	41	4,1	30**
Fan and water pump pulley bolts	27	2,8	20
Camshaft gear securing bolt (when fitted)	115	11,8	85
Engine to main frame bolts	130	13,3	96
Gearbox — early models (5 × 2)			
Selector cover to gearbox bolts	37	3,7	27
Transfer housing to gearbox bolts	37	3,7	27
Transfer housing cover screws	20	2	15
Mainshaft nut (using tool 18G 1139 A)	108	11	80
Gearbox — synchro — two-wheel drive and four-wheel drive			
**Mainshaft locknut	245	25	180**
Mainshaft bearing adjusting nuts	163	16,6	120
Selector cover screws and nuts	37	3,7	27
Transfer housing to gearbox bolts	37	3,7	27
Transfer housing cover screws	20	2,1	15
Dropbox output shaft cover bolts (4WD only)	45	4,6	33
** Drop box securing bolts (4WD only)**	56	5,7	41
Power take-off			
Bearing housing to hydraulic case	130	13,27	96
Output shaft nut	200	21	150

https://tractormanualz.com/

	Nm	kgf m	lbf ft
Rear axle			
Half axle to gearbox bolts	57	5,8	42
Wheel nuts (flanged axle): 245	170	17,3	125
All other models	340	34,6	250
Wheel disc nut and bolt	231	23,5	170
P.A.V.T. rim clamp bolt	340	34,6	250
Sliding hub clamp bolt	340	34,6	250
Sliding hub to wheel centre nut	170	17,3	125
Hydraulics			
Lift unit to gearbox: ½ in U.N.F.	176	18	130
7/16 in U.N.F.	57	5,8	42
½ in U.N.C.	163	16,6	120
Cross-shaft assembly to lift unit bolts	136	13,8	100
Lift-arm clamp bolts	163	16,6	120
Lift cylinder to case dowel bolts	190	19,4	140
Control valve to lift cylinder bolts	** 37	3,7	27**
Relief valve housing bolts	20	2	15
Pump tie-bolts: square headed	54 to 61	5,5 to 6,2	40 to 45
hexagon headed	47 to 54	4,8 to 5,5	35 to 40
Hydraulic pump drive gear to I.P.T.O. drive shaft bolts	16,7 to 19,6	1,7 to 2	12 to 14
Front axle—two-wheel drive			
Pivot pin nut	340	34,6	250
Steering arm clamp bolts	163	16,6	120
Extending beam bolts	340	34,6	250
Wheel nuts	110	11	80
**Radius arm bracket bolts: 262/272/282	131	13,3	96
Trunnion bolts: 262/272/282**	340	34,6	250
Tie-rod nuts	108	11	80**
Front axle—four-wheel drive			
Hub end cover bolts	45	4,6	33
Hub locknut	1160	118	855
Swivel stub axle cover nuts/bolts	130	13,2	96
Hub support shaft locknuts	130	13,2	96
Bearing locking screw nuts	180	18,4	133
Differential support caps	130	13,2	96
Differential carrier to axle case nuts	85	8,7	63
Pinion ring locking nut	441	46	332
Crown wheel securing bolts	85	8,7	63
Differential end cover bolts	45	4,6	33
Pinion cover setscrews	25	2,5	18
Track-rod end nuts	140	14,3	108
**Wheel nuts	130	13,2	96**

https://tractormanualz.com/

	Nm	kgf m	lbf ft
Steering			
Pump—All models except 245: securing bolts**	40 to 47	4,1 to 4,8	30 to 35
filter element securing stud	11 to 27	1,1 to 2,8	8 to 20
reservoir securing nut through-bolts	3 to 4	0,3 to 0,4	2 to 3
	34 to 40	3,5 to 4,1	25 to 30
Pump—245: tank bolts	3,7 to 4,4	0,4 to 0,45	2.8 to 3.3
gear cover housing bolts	16 to 20	1,7 to 2	12 to 15
relief valve assembly	41 to 54	4,1 to 5,5	30 to 40
filler plug	13 to 27	1,4 to 2,8	10 to 20
Power steering unit end cap nuts	30	3	22
Tie-rod socket nuts	110	11	80
Tie-rod setscrews	47 to 54	4,8 to 5,5	35 to 40
Arm swivel pin	163	16,6	120
Cylinder piston nut	136	13,8	100
**Centre post nut	220	22,2	160**
Drawbar			
Drawbar securing bolts	340	35	250
Electrical			
Alternator pulley nut	35	3,5	25
Starter motor: engagement lever pivot pin locknut	22	2,2	16
through-bolts—All models except 245	13	1,38	10
through-bolts—245	11	1,1	8
solenoid securing nuts	6	0,6	4,5
Rear number-plate bolts	4,5	0,45	3,3
Rear plough lamp swivel bolts	4,5	0,45	3,3
Cab			
Front cab mounting bolts—all models:			
upper (through mounting)	82 to 115	8,3 to 11,8	60 to 85
lower (below mounting)	13 to 27	1,4 to 2,8	10 to 20
Rear cab mounting bolts—early models:			
upper (above mounting)	13 to 27	1,4 to 2,8	10 to 20
lower (through mounting)	82 to 115	8,3 to 11,8	60 to 85
Rear cab mounting bolts—later models	265 to 290	27 to 29,7	195 to 215

https://tractormanualz.com/

LUBRICANTS, FLUIDS AND CAPACITIES

Recommended Lubricants

Special Lubricants and Compounds

Clutch and Brake Fluids

Anti-freeze

Corrosion Inhibitors

Fuel

Capacities

https://tractormanualz.com/

LUBRICANTS, FLUIDS AND CAPACITIES

LUBRICANTS

	NORMALLY ASPIRATED ENGINES (SEE NOTE FOR TURBOCHARGED ENGINE)			TRANSMISSION AND HYDRAULICS	HYDROSTATIC STEERING RESERVOIR	FRONT AXLE (FOUR-WHEEL DRIVE ONLY)	GREASE POINTS
MINIMUM PERFORMANCE LEVEL	MIL-L-2104 B			MIL-L-2104 B		MIL-L-2105 B	Multi-Purpose Lithium Grease NLGI Consistency No. 2
	Above 27°C (80°F)	−1°C (30°F) to 27°C (80°F)	Below −1°C (30°F)				
BP	BP Vanellus M30	BP Vanellus M20W	BP Vanellus M10W	BP Tractor Oil Universal 20W/30	Autran B	BP Hypogear 90 EP	BP Energrease Universal or BP Energrease LM Grease
	BP Vanellus M20-50		BP Vanellus M10W-30				
	BP Tractor Oil Universal						
CASTROL	Castrol Deusol CRI30	Castrol Deusol CRI20	Castrol Deusol CRI10	Agricastrol Multi-Use 20W/30	Castrol TQF or Agricastrol ATF	Castrol Hypoy B.EP 80 or Castrol Hypoy B.EP 90	Agricastrol Multi-Use Grease or Castrol LM Grease
	Agricastrol Multi-Use						
DUCKHAMS	Fermadcol/Fleetol HDX 30	Fermadcol/Fleetol HDX 20	Fermadcol/Fleetol HDX 10W		Q-Matic or Fleetmatic F	Duckhams Hypoid 80 S	Duckhams Admax L2 or LB 10
	Duckhams Fleetol Multilite						
ESSO	Essolube HDX 30	Essolube HDX 20W	Essolube HDX 10W	Esso Tractorlube Universal 20W/30	Glide or Esso ATF	Esso Gear Oil GX 85W/140	Esso Multi-Purpose Grease H
	Esso Tractorlube Universal						
MOBIL	Mobil Delvac 1230	Mobil Delvac 1220	Mobil Delvac 1210	Mobiland Universal 20W/30	Mobil ATF 210 or Mobil ATF 200	Mobilube HD 80 or 90	Mobilgrease MP
	Mobil Delvac Special 20W/50*		Delvac Special 10W/30				
	Mobiland Universal						
SHELL	Shell Rotella SX 30	Shell Rotella SX 20/20W	Shell Rotella SX 10W	Shell Tractor Oil Universal 20W/30	Donax TF	Shell Spirax Heavy Duty 75/80W or Shell Spirax Heavy Duty 90/140	Shell Farm Grease Universal or Shell Retinax A
	Shell Tractor Oil Universal		Shell Rotella SX 10W				
ELF STERNOL	Sternol Elixir 30	Sternol Elixir 20W/20	Sternol Cougar 10W	Tractorelf Multigrade 20W/30	Elfmatic F	Tranself 690/140	Elf Multi 2 Grease
	Tractor Elf Super T.O.U.		Sternol Elixir 10W30				
TEXACO	Ursa Oil Extra Duty S.A.E. 30	Ursa Oil Extra Duty S.A.E. 20-20W	Ursa Oil Extra Duty S.A.E. 10W	Ursa Oil Extra Duty S.A.E. 20W-30	Texamatic Type G or Texamatic Fluid 9330	Multigear Lubricant EP 90	Multifak EP 2
	Ursa Oil Extra Duty S.A.E. 20W/30		Ursa Oil Extra Duty S.A.E. 10W-30 Ursatex S.A.E. 10W-30				

NOTE: Turbocharged engine oils must meet a minimum performance level of MIL-L-2104C with S.A.E. viscosity grades equivalent to those shown in the above table for the temperature conditions prevailing.

SPECIAL LUBRICANTS AND COMPOUNDS

Application	
Air filter element (washing)	Low lather detergent (e.g. 'Pat' or 'Cooper Kleen Detergent Air Filter Compound')
Alternator electrical connections	'M' grade 45-55 tin/lead solder and Fry's H.T.3 Solder
Alternator bearings	Shell Alvania RA Grease
**Belleville washer pack—hydraulics	Rocol Molylistate Grease**
Brake and clutch hydraulic components (cleaning)	Girling Cleaning Fluid
Brake and clutch cylinder gaiters	Girling Rubber Grease
**Engine valve guide lubricant	Graphited oil (Acheson's Colloids 'Oildag')
Engine core plug sealing/locking compound	Loctite Primer Grade N and Loctite Grade 270**
**Gearbox primary shaft needle bearings (5 X 2)	Shell Alvania No. 2 Grease**
Hydraulic control valve plugs	Loctite Hydraulic Seal
Screw locking	Loctite as specified in operation
Sealing compound (general)	Hylomar or Welseal

CLUTCH AND BRAKE FLUID

Use a high-boiling-point brake fluid conforming to S.A.E. J1703C (Castrol/Girling—Crimson) with minimum boiling-point of 260°C (500°F). **DO NOT use any other type of fluid in the braking or clutch systems.**

https://tractormanualz.com/

ANTI-FREEZE SOLUTIONS

Use Bluecol 'U' Anti-freeze or any anti-freeze conforming to B.S.3151 or B.S.3152. The recommended quantities of anti-freeze for different degrees of frost precautions are:

245

Solution	*Commences to freeze*		*Frozen solid*		*Amount of anti-freeze*		
%	°C	°F	°C	°F	*Litres*	*Pints*	*U.S. Pints*
25	−13	9	−26	−15	2,0	3.5	4.25
33.3	−19	−2	−36	−33	2,8	5	6
50	−36	−33	−48	−53	4,0	7	8.5

All models except 245

Solution	*Commences to freeze*		*Frozen solid*		*Amount of anti-freeze*		
%	°C	°F	°C	°F	*Litres*	*Pints*	*U.S. Pints*
33	−19	−2	−36	−33	4,75	8	9.75
50	−36	−33	−48	−53	7	12	14.5

IMPORTANT (All models except 245): A minimum of 33% anti-freeze must be used to protect the system against corrosion. A solution of less than 33% anti-freeze will not fully protect the system. In warm climates when no anti-freeze is available the cooling system must be protected against corrosion by the addition of a corrosion inhibitor in the coolant. Do not exceed 60% anti-freeze in the cooling system.**

CORROSION INHIBITORS: Where anti-freeze is not required it is essential that one of the following inhibitors be added to the cooling system.

ICI (Northwich) 'Nalflock A131', Houseman and Hergo 'R.T.F. 80', or Albright and Wilson 'Sobenite 10'. The amount of inhibitor to be added to the cooling system should be 1 to 2% of coolant volume. Drain the cooling system every two years and refill with a fresh inhibitor solution. In all cases the manufacturer's instructions should be followed.**

FUEL

Fuel oils suitable for use in diesel engines fitted in these vehicles are generally known as diesel fuel oil, distillate diesel fuel, automotive gas oil, or Derv fuel. Waste or residual oils must not be used. It is recommended that fuel oil should conform to BS 2869, 1967 Class A1.

CAPACITIES (approx.)

**Fuel tank	68,2 litres (15 gallons)
Engine including oil filter: 245	6,8 litres (12 pints)
All models except 245	9,7 litres (17 pints)
Gearbox and rear axle: Two-wheel drive models	57,5 litres (12.5 gallons)
Four-wheel drive models	59,3 litres (13 gallons)
Cooling system: 245	7,95 litres (14 pints)
All models except 245	13,6 litres (24 pints)
Belt pulley unit	1,4 litres (2.5 pints)
Front axle centre case: Four-wheel drive	6 litres (10.6 pints)
Hub reduction housing: Four-wheel drive	1,5 litres (2.6 pints)**

https://tractormanualz.com/

NOTES

https://tractormanualz.com/

MAINTENANCE SCHEDULE

Before commencing maintenance, obtain problem report from operator, check operation of all controls, examine all systems for leaks and damage and report any additional work considered necessary.

1800 = Every 1800 hours
3600 = Every 3600 hours
† = Autumn biennially

	HOURS			
	200	400	800	1200
Air cleaner				
Renew the element				X
Engine				
Check engine oil	X	X	X	X
Fit oil filter element		X	X	X
Check/adjust valve rocker clearance		X	X	X
Cooling system				
Change coolant				†
Fuel system				
Renew fuel filter element			X	
Drain and flush out main fuel tank and clean pencil filter				X
Clean fuel injectors (Distributor or Dealer) removal		X	X	X
Clean lift pump filter—4-cylinder engines only		X	X	X
Change oil in fuel injection pump (Simms in-line only)		X	X	X
Transmission				
Drain oil and refill				X
Brakes and clutch				
Check/adjust brakes and clutch	X	X	X	X
Check/top up hydraulic fluid reservoirs	X	X	X	X
Inspect brake pipes and connections		X	X	X
Replace hydraulic fluid				1800
Overhaul brake and clutch cylinders				3600
Front axle 4WD				
Drain and refill differential housing and hubs				X
Steering				
Check for wear and damage and replace components as necessary				X
Power steering system				
Drain reservoir, renew filter element and refill with new oil				X
Hydraulics				
Remove hydraulic assembly complete and clean hydraulic oil strainer				X
Remove the by-pass filter element		X	X	X
Renew valve chest to cylinder filter element	X	X	X	X
Belt pulley (if fitted)				
Drain oil and refill				X
Electrical				
Check battery specific gravity readings				X
Check battery connections and terminals	X	X	X	X
Check starter motor commutator and brush gear				X
Check wiring terminals; renew or tighten as necessary				X
General				
Touch in all damaged paintwork				3600
Renew windscreen wiper blade				X

https://tractormanualz.com/

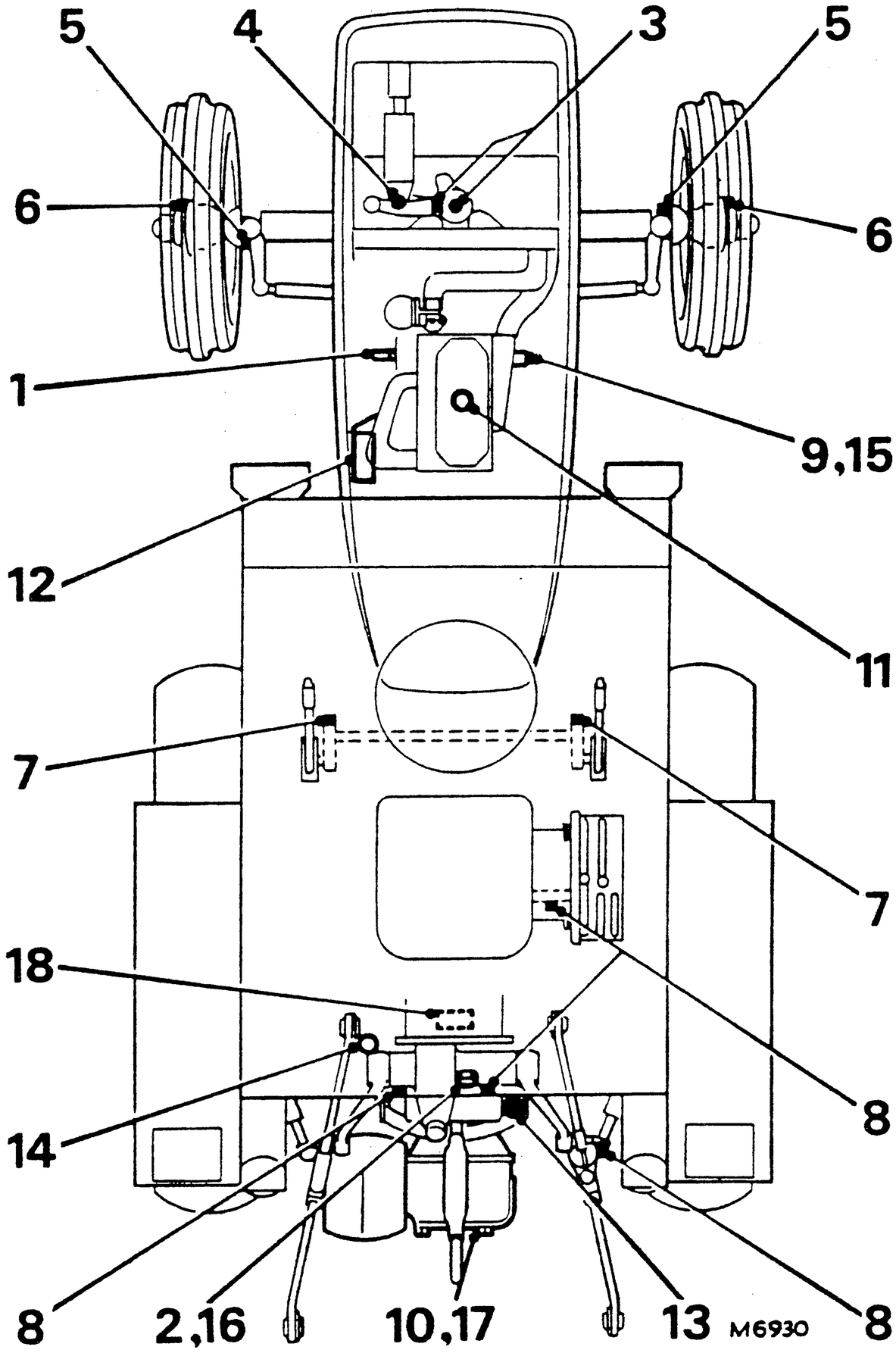

https://tractormanualz.com/

KEY TO LUBRICATION CHART – 245

Daily every 10 hours

Check the engine oil level, and top up if necessary with new oil.

Every 50 hours

(1) ENGINE. Check the oil level and top up with new oil.
(2) TRANSMISSION. Top up with new oil
(3) STEERING (2 nipples). Give one stroke of the grease gun (crank-arm end trunnion pivots).
(4) POWER STEERING RAM. (1 nipple)
(5) FRONT AXLE (2 nipples)
(6) FRONT HUBS (1 nipple per hub)
(7) HANDBRAKE CROSS-SHAFT (2 nipples)
(8) HYDRAULIC POWER UNIT CROSS-SHAFT RIGHT-HAND LIFT ROD ADJUSTMENT MECHANISM AND HYDRAULIC CONTROL QUADRANT (4 nipples)

} Give each nipple two strokes of the grease gun

(9) POWER STEERING RESERVOIR. Check the oil level and top up if necessary with new oil.
(10) BELT PULLEY UNIT (if fitted). Check the oil level and top up with new oil.

Every 200 hours

(11) ENGINE. Drain and refill with new oil.

Every 400 hours

(12) OIL FILTER. Discard the engine oil filter element and replace it with a new one.
(13) BY-PASS FILTER. Discard the filter element and fit a new one.
(14) VALVE CHEST TO CYLINDER FILTER. Discard the filter element and fit a new one.

Every 1200 hours

(15) POWER STEERING RESERVOIR. Drain the oil from the reservoir, discard the filter element and fit a new element. Refill with new oil.
(16) TRANSMISSION. Drain and refill with new oil.
(17) BELT PULLEY UNIT (if fitted). Drain and refill with new oil.
(18) HYDRAULIC POWER UNIT. Remove the hydraulic power unit, remove and clean the strainer.

Use only the recommended lubricants, see TB09.

https://tractormanualz.com/

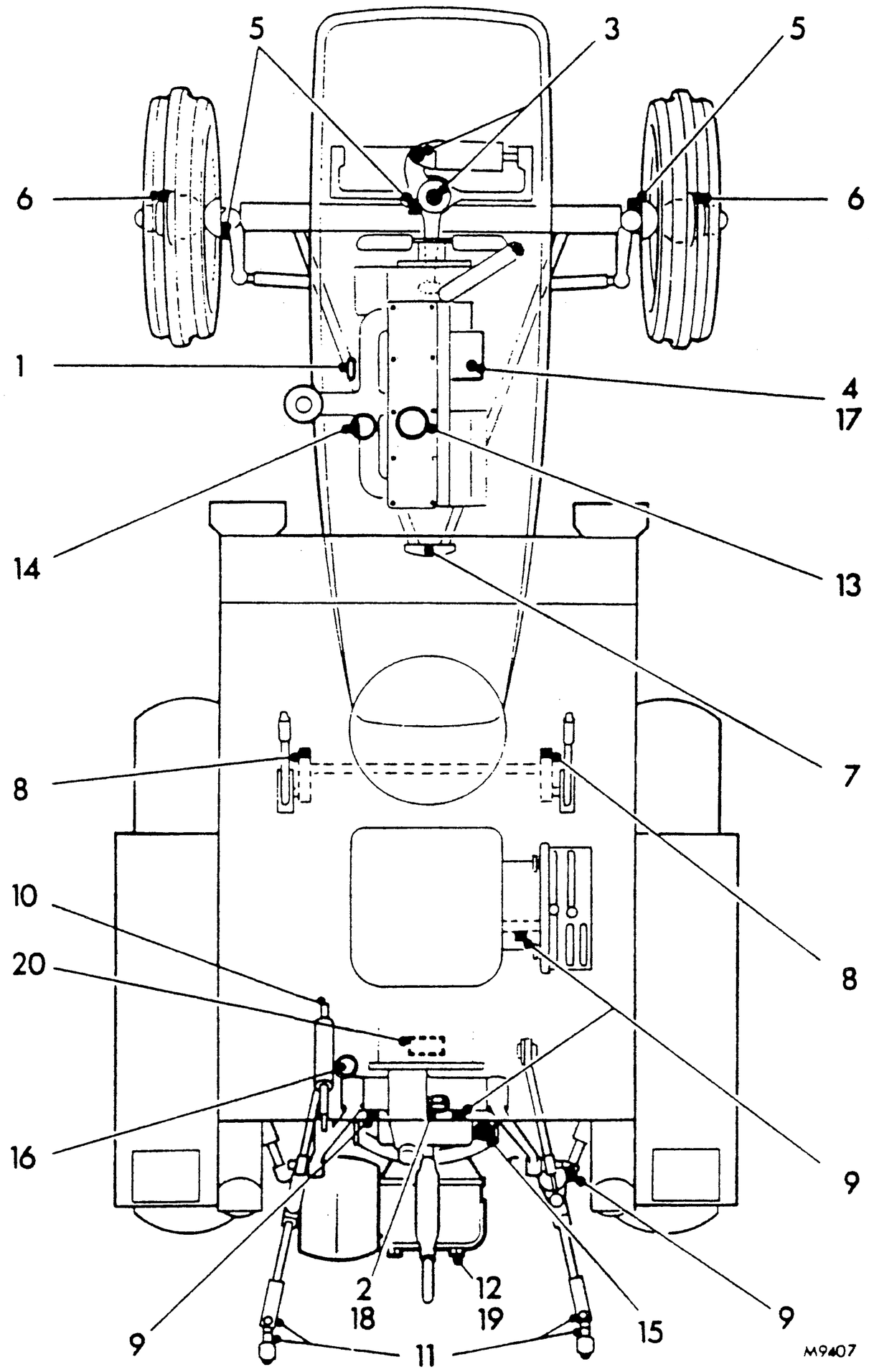

https://tractormanualz.com/

•• KEY TO LUBRICATION CHART—262/272/282 ••

Daily or every 10 hours

Check the engine oil level, and top up if necessary with new oil.

Every 50 hours

(1) ENGINE. Check the oil level and top up with new oil.
(2) TRANSMISSION. Top up with new oil.
(3) STEERING (2 nipples). Give one stroke of the grease gun (crank-arm and crank-arm pivot pin).
(4) POWER STEERING RESERVOIR. Check the fluid level and top up if necessary with new fluid.
(5) FRONT AXLE (3 nipples). Jack up to inject grease.
(6) FRONT HUBS (1 nipple per hub)
(7) RADIUS RODS (1 nipple)
(8) HANDBRAKE CROSS-SHAFT (2 nipples)
(9) HYDRAULIC POWER UNIT CROSS-SHAFT RIGHT-HAND LIFT ROD ADJUSTMENT MECHANISM AND HYDRAULIC CONTROL QUADRANT (4 nipples)

} Give each nipple two strokes of the grease gun

••(10) HYDRAULIC LIFT ASSISTOR CYLINDER (1 nipple)—if fitted. Lower end, give one stroke of a grease gun.
(11) EASY-CONNECT LOWER LINKS (4 nipples)—if fitted. Give one stroke of a grease gun.
(12) BELT PULLLEY UNIT (if fitted). Check the oil level and top up with new oil.

Every 200 hours

(13) ENGINE. Drain and refill with new oil.

Every 400 hours

(14) OIL FILTER. Discard the engine oil filter and replace it with a new one.
(15) BY-PASS FILTER. Discard the filter element and fit a new one.
(16) VALVE CHEST TO CYLINDER FILTER. Discard the filter element and fit a new one.

Every 1200 hours

(17) POWER STEERING RESERVOIR. Drain the fluid from the reservoir, discard the filter element and replace it with a new one. Refill with new fluid.
(18) TRANSMISSION. Drain and refill with new oil.
(19) BELT PULLEY UNIT. Drain and refill with new oil.
(20) HYDRAULIC POWER UNIT. Remove the hydraulic power unit, remove and clean the strainer.••

Use only the recommended lubricants, see TB09.

https://tractormanualz.com/

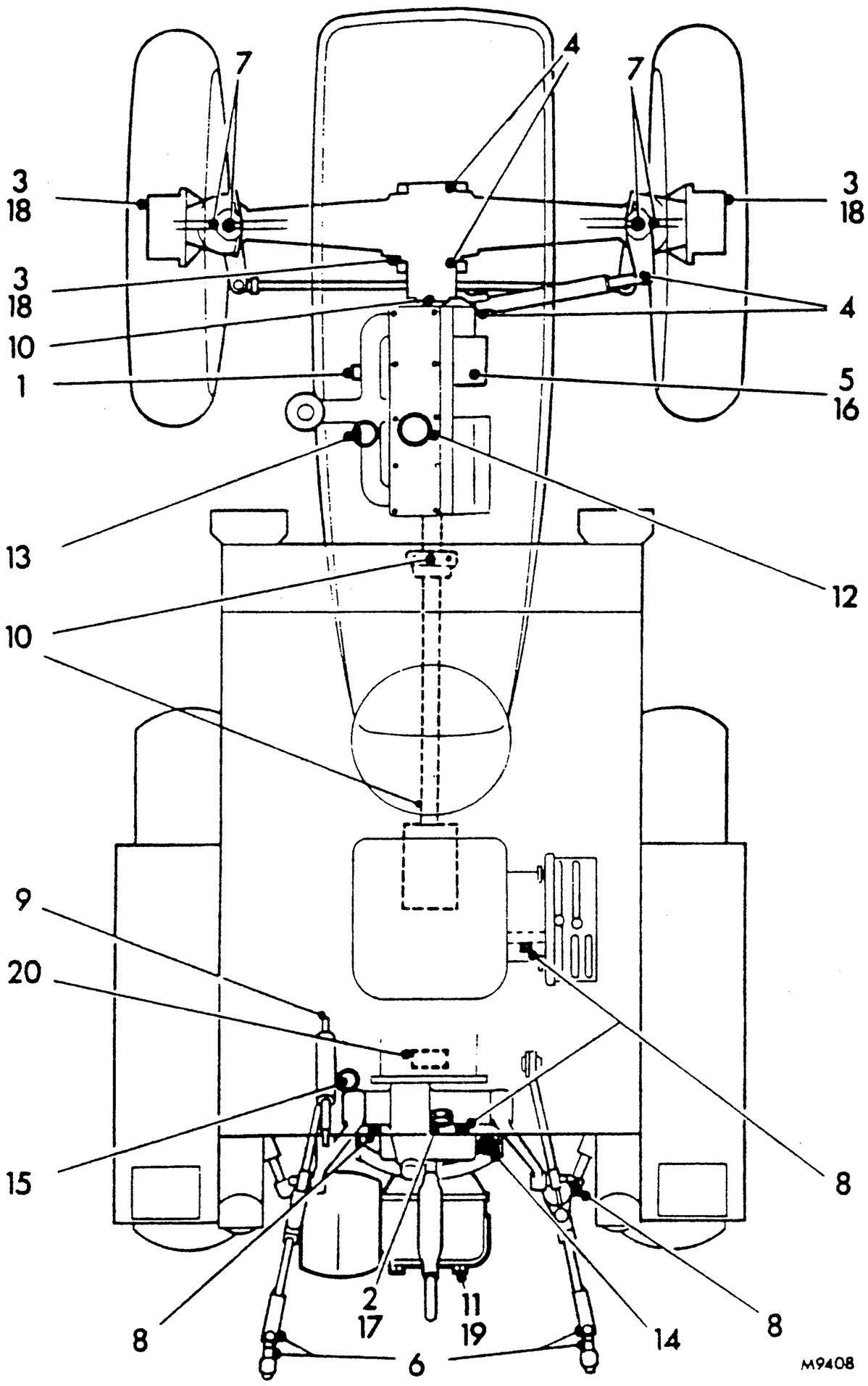

https://tractormanualz.com/

** KEY TO LUBRICATION CHART—462/472/482 **

Daily or every 10 hours

Check the engine oil level, and top-up if necessary with new oil.

Every 50 hours

(1) ENGINE. Check the oil level and top-up with new oil.

(2) TRANSMISSION. Top-up with new oil.

(3) FRONT HUBS AND DIFFERENTIAL. Top-up with new oil.

(4) STEERING (4 nipples). Give one stroke of a grease gun (trunnion and power steering ram).

(5) POWER STEERING RESERVOIR. Check the fluid level, and-top up if necessary with new fluid.

** (6) EASY-CONNECT LOWER LINKS (if fitted) (4 nipples). Give one stroke of a grease gun.

(7) FRONT AXLE (4 nipples or 2 nipples on later models).**

(8) HYDRAULIC POWER UNIT CROSS-SHAFT, RIGHT-HAND LIFT-ROD ADJUSTMENT MECHANISM AND HYDRAULIC CONTROL QUADRANT (4 nipples). } Give each nipple two strokes of the grease gun.

** (9) HYDRAULIC LIFT ASSISTOR CYLINDER—if fitted (1 nipple). Give one stroke of a grease gun.

(10) DRIVE SHAFT SUPPORT BEARING. Give three strokes of a grease gun.

(11) BELT PULLEY UNIT. Check the oil level and top-up with the new oil.

Every 200 hours

(12) ENGINE. Drain and refill with new oil.

Every 400 hours

(13) OIL FILTER. Discard the engine oil filter and replace it with a new one.

(14) BY-PASS FILTER. Discard the filter element and fit a new one.

(15) VALVE CHEST TO CYLINDER FILTER. Discard the filter element and fit a new one.

Every 1200 hours

(16) POWER STEERING RESERVOIR. Drain the fluid from the reservoir, discard the filter element, and replace it with a new one. Refill with new fluid.

(17) TRANSMISSION. Drain and refill with new oil.

(18) FRONT AXLE AND HUBS. Drain and refill with new oil.

(19) BELT PULLEY UNIT. Drain and refill with new oil.

(20) HYDRAULIC POWER UNIT. Remove the hydraulic power unit, remove and clean the strainer.**

Use only recommended lubricants, see TB09.

https://tractormanualz.com/

ENGINE – 245

Checking oil level

Ensure tractor is standing on a level surface.

1. Check level of oil with dipstick.
2. Remove oil filler cap and add oil to maintain the level at 'MAX' mark on dipstick.

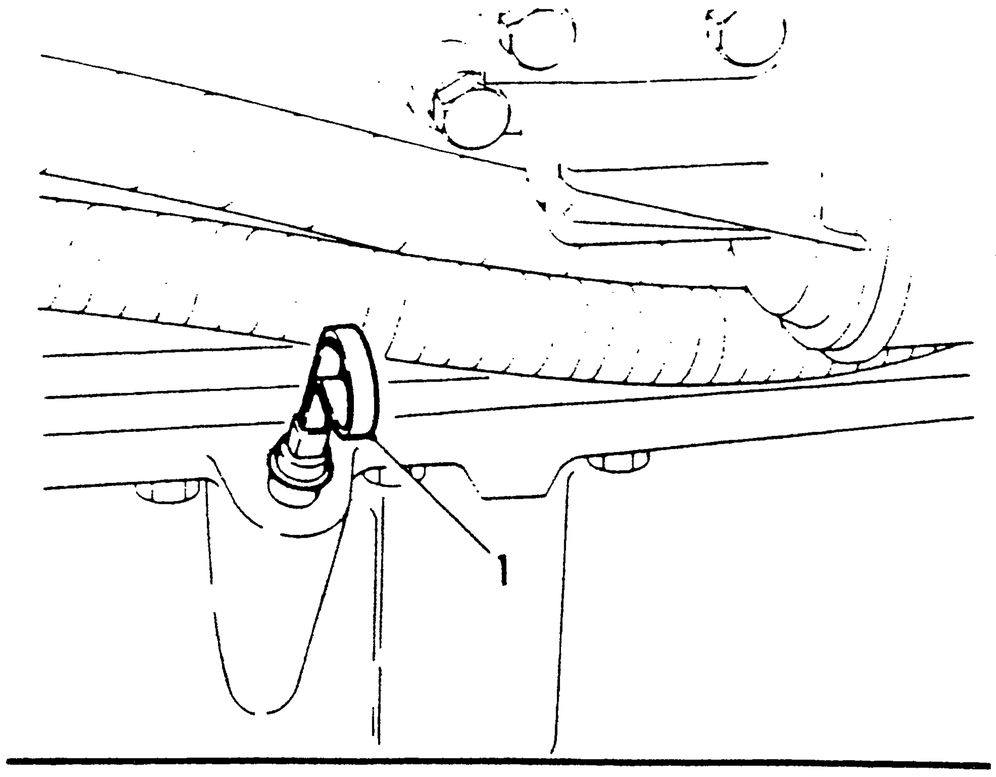

Oil – drain and refill

3. Drain oil while engine is warm by removing plug from sump.
4. Clean plug and ensure sealing washer is serviceable before refitting.
5. Refill with correct quantity and grade of oil. Run engine for a short time, then allow to stand for a few minutes before re-checking the level.

Engine oil filter

1. Unscrew the cartridge and discard it.
2. Smear the new seal with engine oil and fit to new cartridge.
3. Screw the cartridge onto the filter head, using hand force only.
   Do not use a spanner. Do not overtighten.
4. Check the filter for leakage immediately the engine is started.

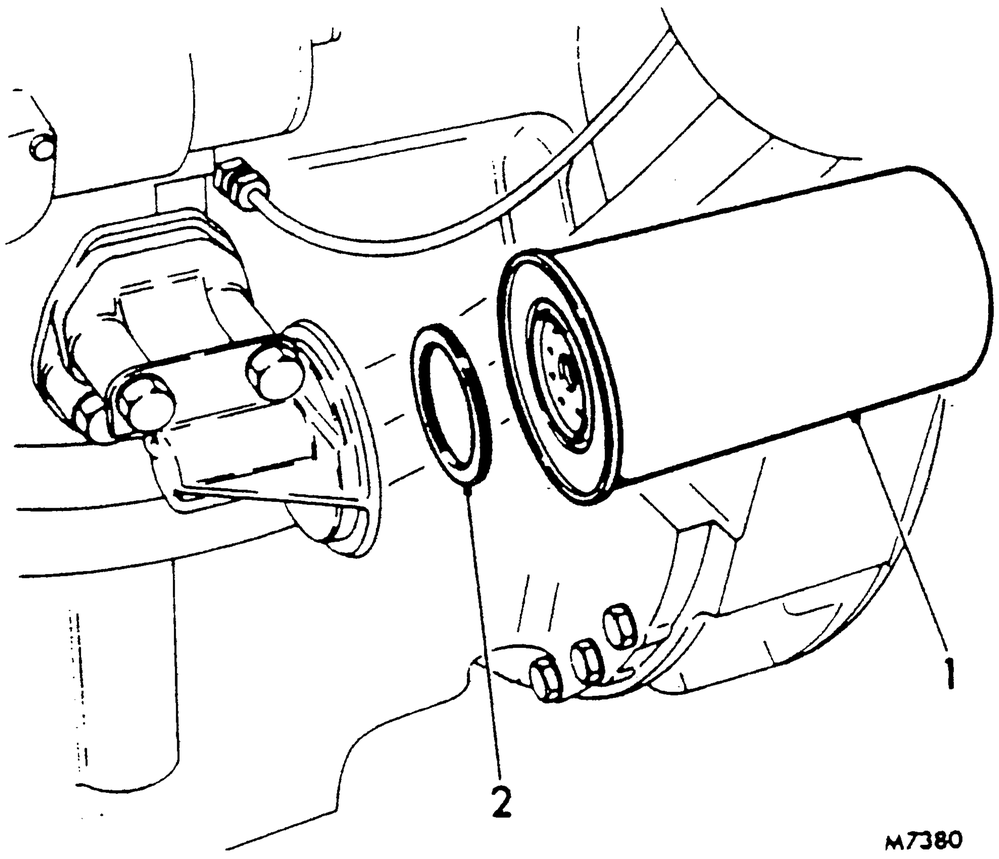

https://tractormanualz.com/

Check and adjust valve clearance

** 1. Remove rocker cover and breather pipe.
NOTE: On turbocharged models the air inlet pipe must be removed.**

2. Check clearance between valve rocker arms and valve stems with an 0,3 mm (0.012 in) feeler gauge; the gauge should be a sliding fit when the engine is cold. Turn the crankshaft until No. 1 piston is at T.D.C. on its compression stroke to check and adjust Nos. 1, 2, 3 and 5 tappets. Turn the crankshaft one complete turn (360°) to check and adjust Nos. 4 and 6 tappets.
3. Slacken locknut.
4. Adjust tappet screw until the correct clearance is obtained between the head of the tappet screw and the rocker arm.
5. Hold the tappet and tappet screw and tighten the locknut.

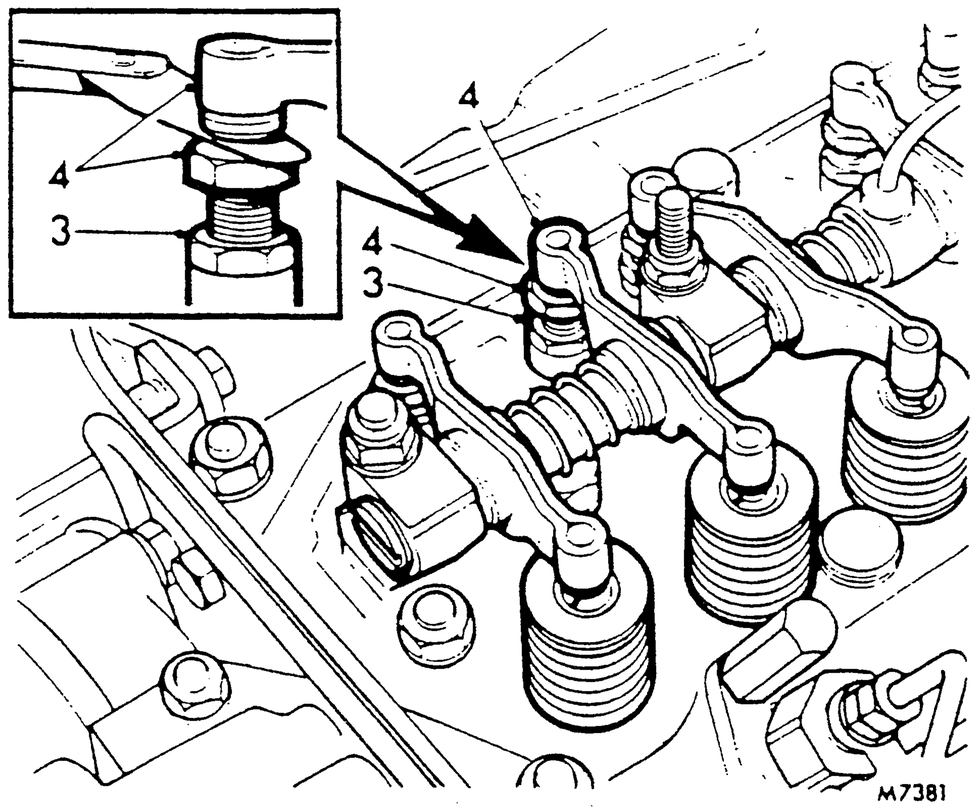

ENGINE—All models except 245

Checking oil level

Ensure tractor is standing on a level surface.

1. Check level of oil with dipstick.
2. Remove oil filler cap and add oil to maintain the level at 'MAX' mark on dipstick.

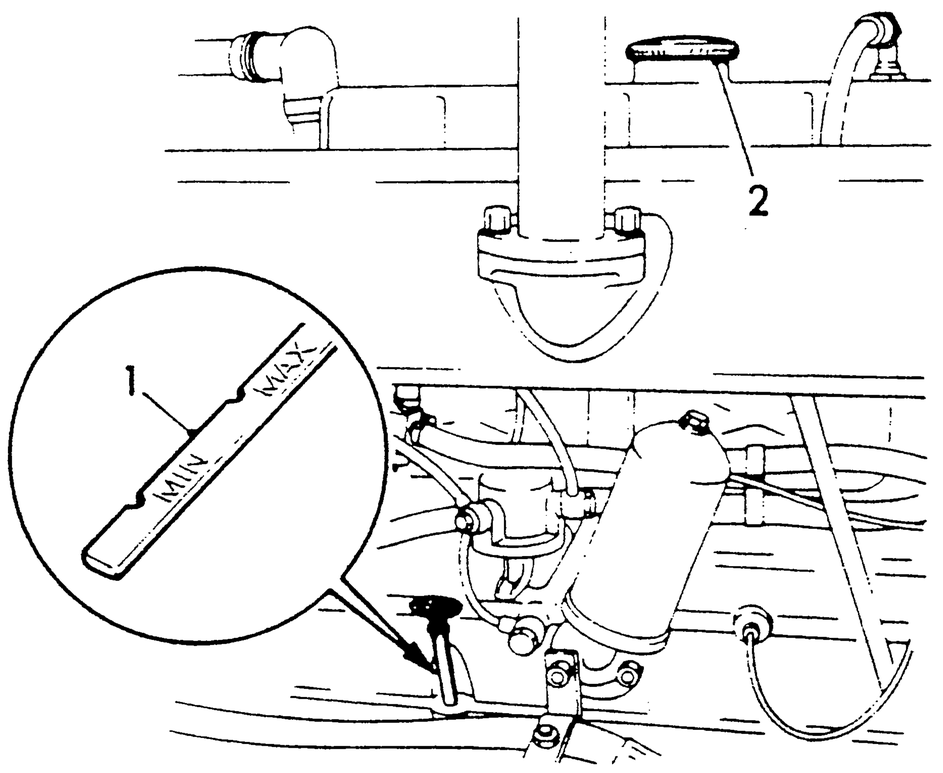

Oil — drain and refill

NOTE: On four-wheel-drive models a flap is provided on the left-hand side of the propeller shaft guard for access to the sump drain plug. Remove the flap and use a suitable chute to carry the oil clear of the propeller shaft guard. Alternatively, the complete guard may be removed.**

3. Drain oil while engine is warm by removing plug from sump.
4. Clean plug and ensure sealing washer is serviceable before refitting.
5. Refill with correct quantity and grade of oil. Run engine for a short time, then allow to stand for a few minutes before re-checking the level.

NOTE: On turbocharged models, pull out engine stop control, operate starter and allow engine to turn over until oil pressure registers. This ensures that sufficient oil has reached the rotor bearings; release stop control and start engine as normal.

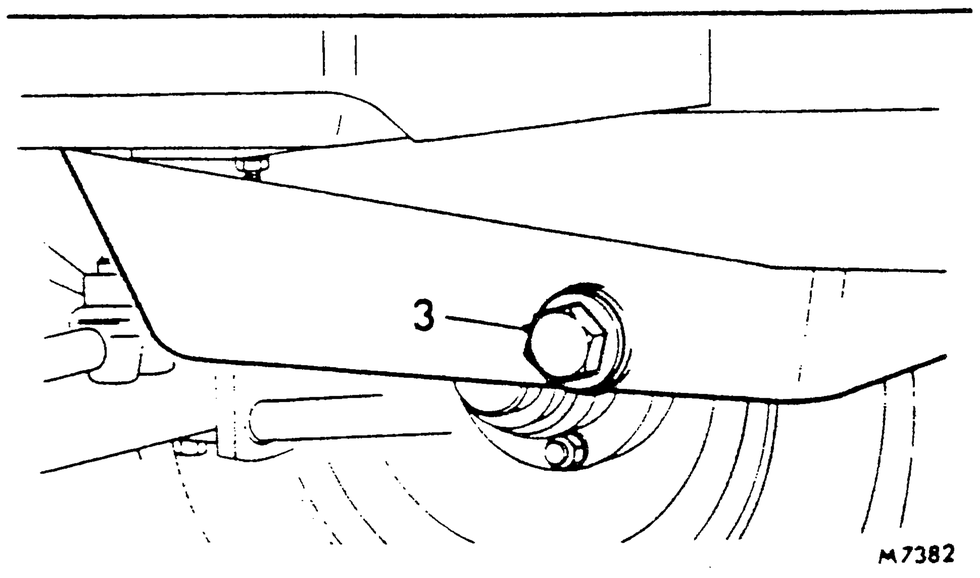

https://tractormanualz.com/

Oil filter element renewal

1. Unscrew the central bolt and detach bowl.
2. Remove and discard the filter element.
3. Clean the filter bowl with a suitable solvent and dry thoroughly.
4. Fit new seal to filter head.
5. Fit new element and reassemble the bowl to the filter head.
6. Run engine and check for oil leaks.

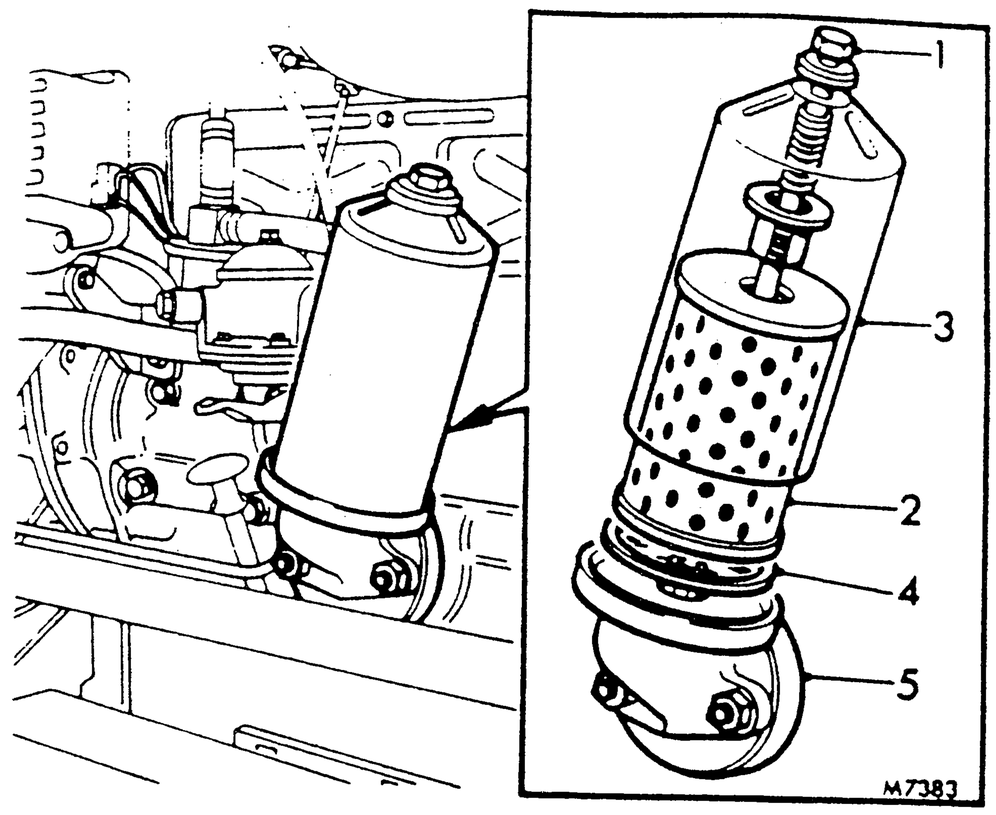

Check and adjust valve clearance

1. Remove breather pipe from rocker cover.
2. Remove rocker cover.
3. Check clearance between valve rocker arms and valve stems with a 0,35 mm (0.013 in) feeler gauge. The gauge should be a sliding fit when the engine is hot or cold. Check clearance of each valve in the following sequence:

   Check No. 1 valve with No. 8 valve fully open.

,,	,,	3	,,	,,	,,	6	,,	,,	,,
,,	,,	5	,,	,,	,,	4	,,	,,	,,
,,	,,	2	,,	,,	,,	7	,,	,,	,,
,,	,,	8	,,	,,	,,	1	,,	,,	,,
,,	,,	6	,,	,,	,,	3	,,	,,	,,
,,	,,	4	,,	,,	,,	5	,,	,,	,,
,,	,,	7	,,	,,	,,	2	,,	,,	,,

4. Slacken locknut.
5. Rotate screw clockwise to decrease and anti-clockwise to increase the clearance.
6. Retighten locknut when clearance is correct, holding screw against rotation.
7. Refit rocker cover and breather pipe.

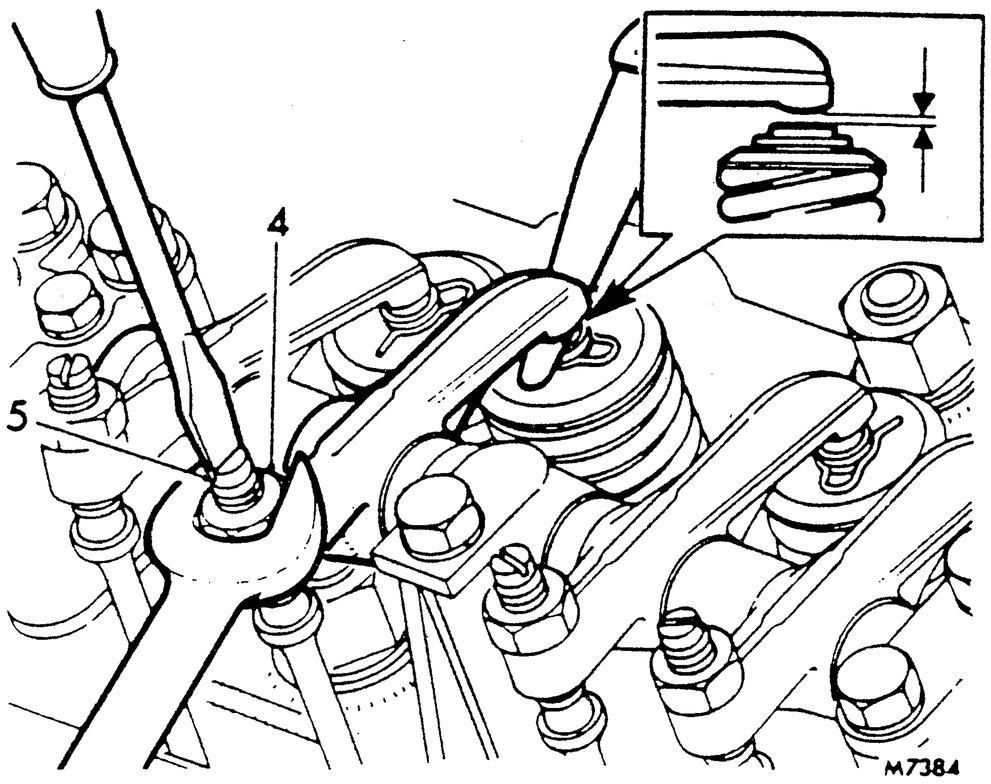

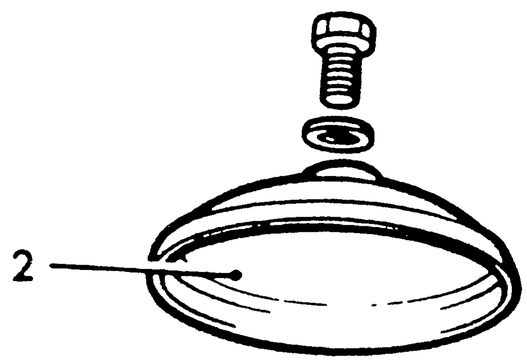

FUEL SYSTEM

••Cleaning lift pump filter—All models except 245••

1. Turn off fuel at tank.
2. Remove centre bolt and lift pump cover.
3. Remove sealing ring and filter gauze.
4. Wash filter in fuel or clean with compressed air.
5. Clean pump chamber.
6. Reverse procedure 1 to 3, ensuring gasket is serviceable.
7. Bleed fuel filter.

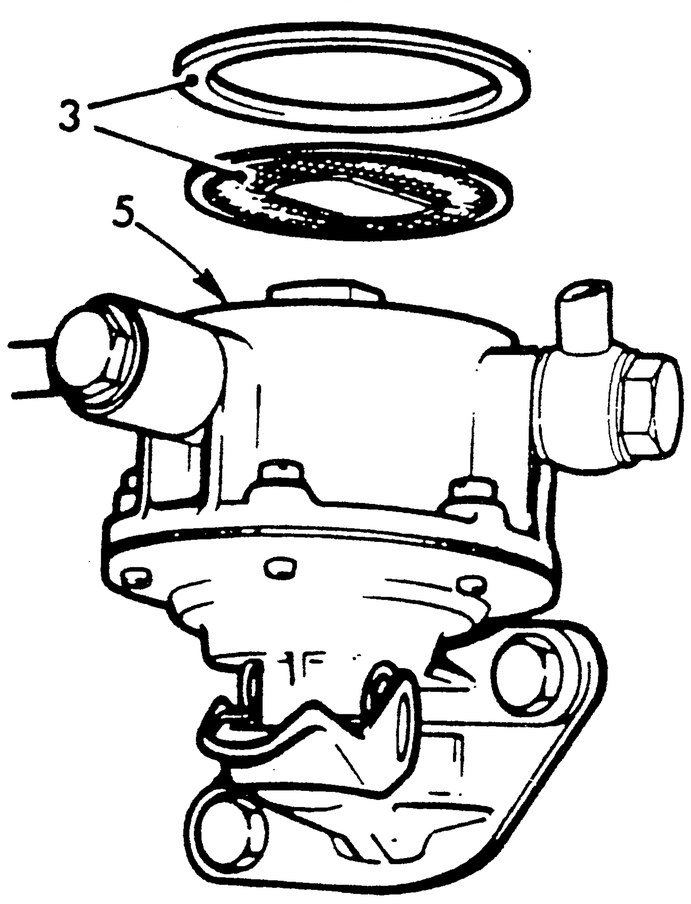

https://tractormanualz.com/

Pencil filter and tank — All models

1. Remove L.H. front side panel.
2. Disconnect the main fuel pipe from the fuel tap.
3. Drain the fuel tank.
4. Remove the fuel tap assembly, which will include the pencil filter, from the tank.
5. Clean the filter.
6. Flush out the fuel tank.
7. Reverse procedure 1 to 4 to reassemble.
8. Bleed fuel system.

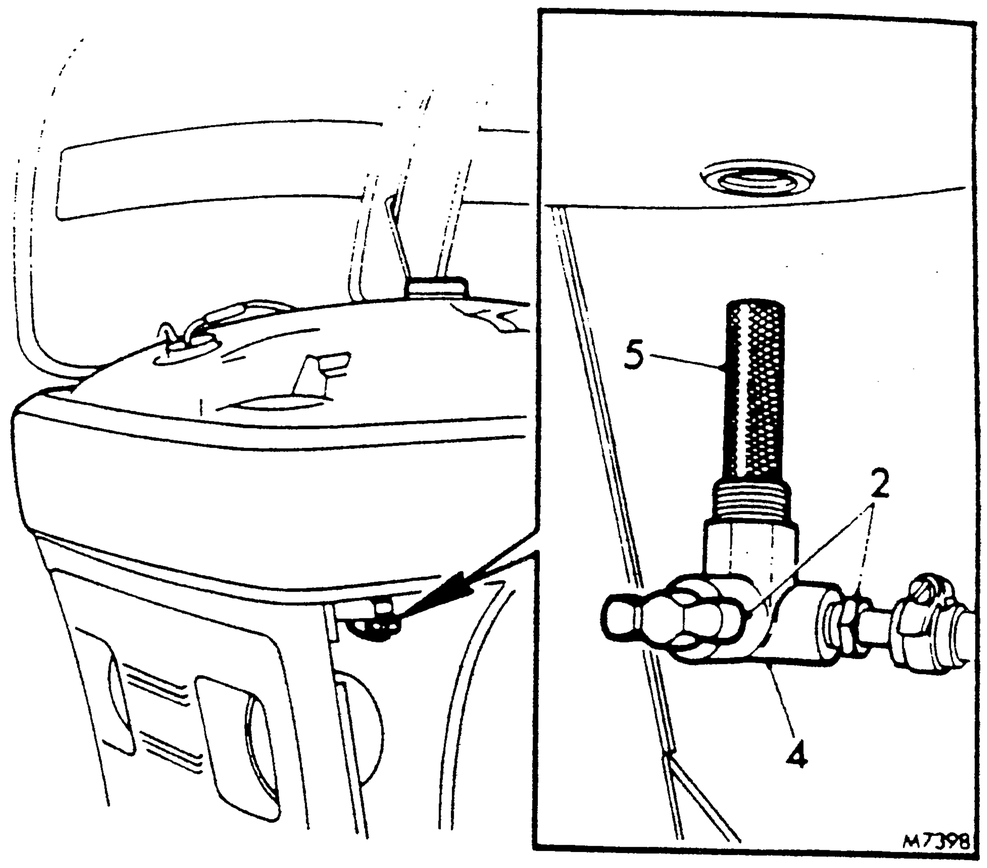

Examine fuel pipes — All models

Check all supply and leak-off pipes for chafing, leaks and corrosion.

Renewing fuel filter element — All models

1. Remove plug (if fitted) and drain fuel.
   WARNING: Do not crank engine when filter is drained of fuel as damage to the injection pump will result.
2. Remove bolt and detach base.
3. Twist element to remove from filter head.
4. Remove sealing rings from filter head and base.
5. Reverse procedure 1 to 3, fitting a new element, noting:
   a. Use new sealing washers and O-rings.
   b. Bleed filter of air.
   c. Check for leaks.
   d. Wipe spilled fuel from tractor.

245

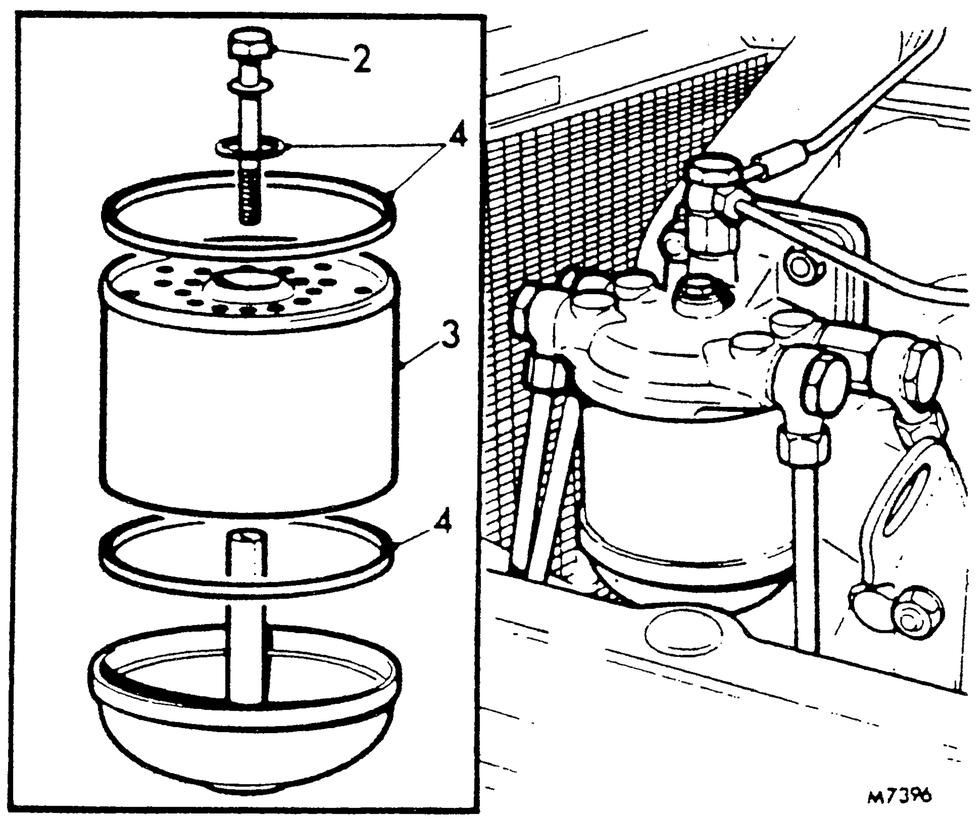

****Draining water from filter—All models except 245****

Unscrew plug in filter base, drain collected water, tighten plug and bleed filter.

****All models except 245****

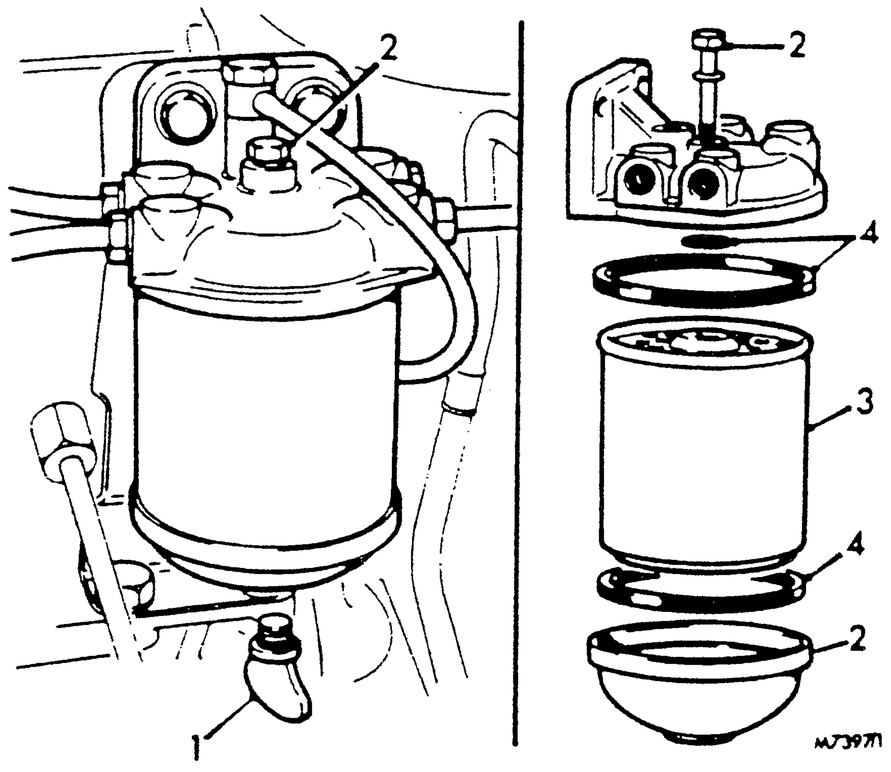

https://tractormanualz.com/

Removing and refitting injectors – 245

1. Disconnect the injector pipe and protect against ingress of dirt.
2. Remove leak-off pipe unions from the injector cap nuts.
3. Remove the banjo union bolts and washers.
4. Remove the injector retaining nuts, withdraw injectors and sealing washers.
5. Reverse procedure 1 to 4, noting:
   a. Fit clean, spray-tested injectors.
      NOTE: Cleaning of injectors should be carried out to C.A.V. Service instructions (see TB19–2).
   b. Fit new injector sealing washers.
   c. Tighten injector retaining nuts evenly to 16,5 Nm (1.65 kgf m, 12 lbf ft).
   d. Bleed injectors of air.

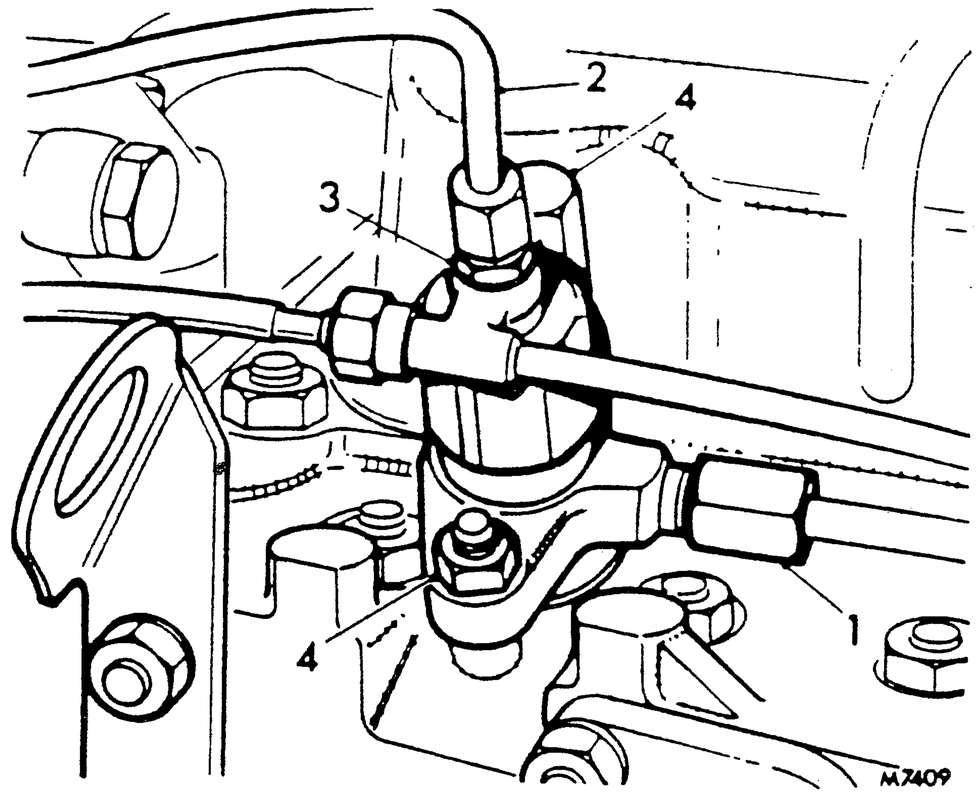

****Removing and refitting injectors—All models except 245****

1. Clean dirt from around injectors.
   NOTE: No dirt must enter injector bores.
2. Disconnect and move leak-off pipe clear.
3. Disconnect injector pipes and protect against ingress of dirt.
4. Remove securing bolts, withdraw injectors and remove sealing washers.
5. Reverse procedure 1 to 4, noting:
   a. Fit clean, spray-tested injectors.
      NOTE: Clean of injectors should be carried out to C.A.V. Service instructions (see TB19–2).
   b. Fit new injector sealing washers.
   c. Tighten injector securing bolts evenly 16,5 Nm (1.65 kgf m), 12 lbf ft).
   d. Bleed injectors of air.

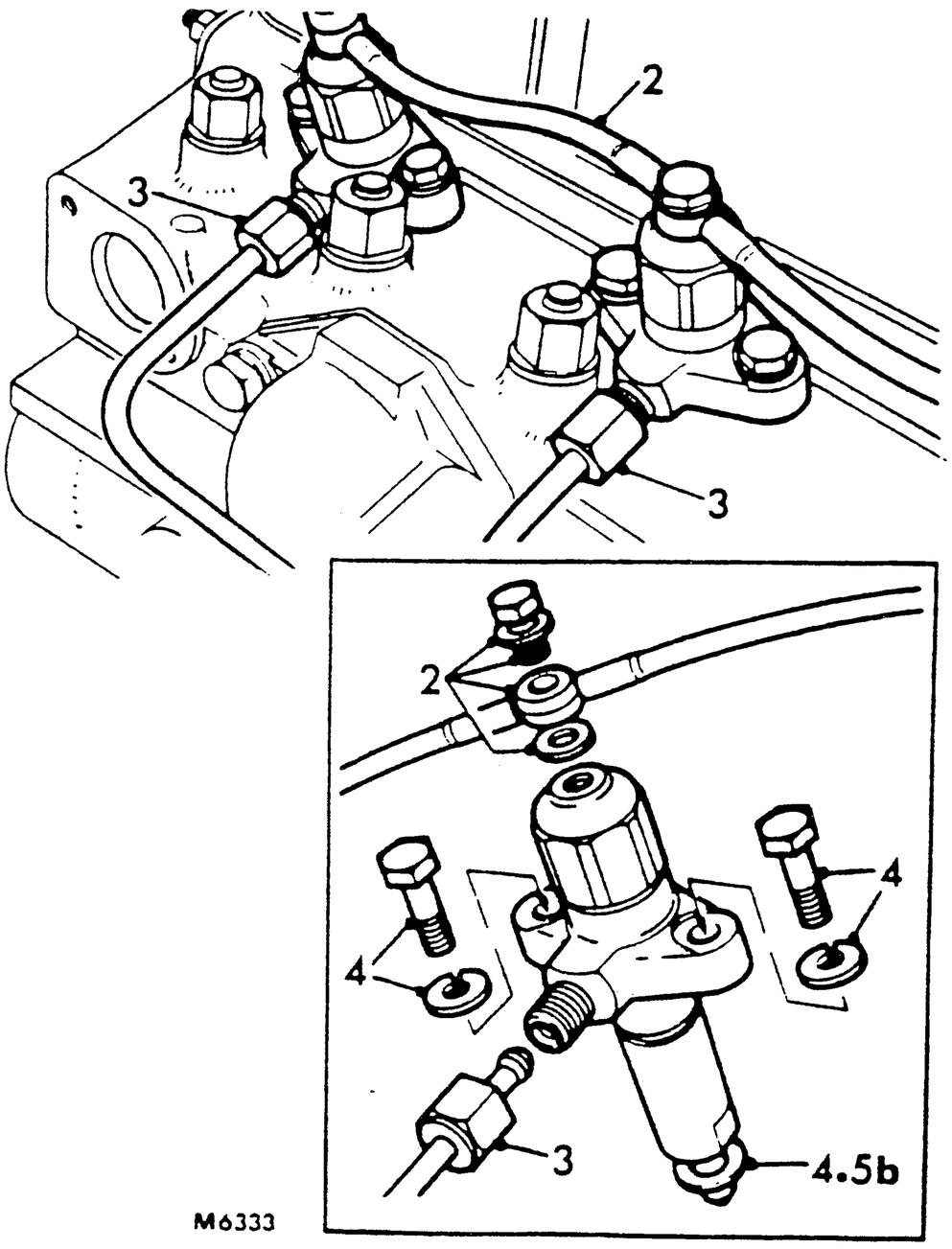

M6333

https://tractormanualz.com/

Bleeding the fuel system — All models

Air can enter the fuel system if any part is dismantled, if the fuel tank is allowed to become empty, or through a leak in the system. This may result in failure to start or erratic running of the engine.

NOTE: After renewing fuel filter elements or draining water from filters it will be necessary to bleed only the filters as in 1 to 3 below. If the injectors have been removed, carry out operation 8.

WARNING: Do not attempt to bleed the fuel system by towing the tractor in gear or damage to the injection pump will result.

1. Ensure that there is adequate fuel in the tank.
2. Slacken leak-off pipe banjo on top of filter.
3. Operate lift pump priming lever until air-free fuel flows from the banjo union, then tighten.

****NOTE:** Turn the engine if required, to allow maximum travel of the priming lever.**

4. Slacken vent screw on injection pump hydraulic head.
5. Slacken vent screw on injection pump governor.
6. Operate lift pump priming lever until air-free fuel flows from both vents, then tighten the hydraulic head screw followed by the governor screw.
7. **245 model only:** Slacken the fuel pipe union at the thermostat unit in the inlet manifold, and operate the fuel lift pump priming lever until fuel free from air bubbles issues around the union threads. Tighten the union.
8. Turn engine using starter motor, ensuring stop control is fully in and throttle is fully open. When the engine starts, allow it to run until it is firing on all cylinders.

245

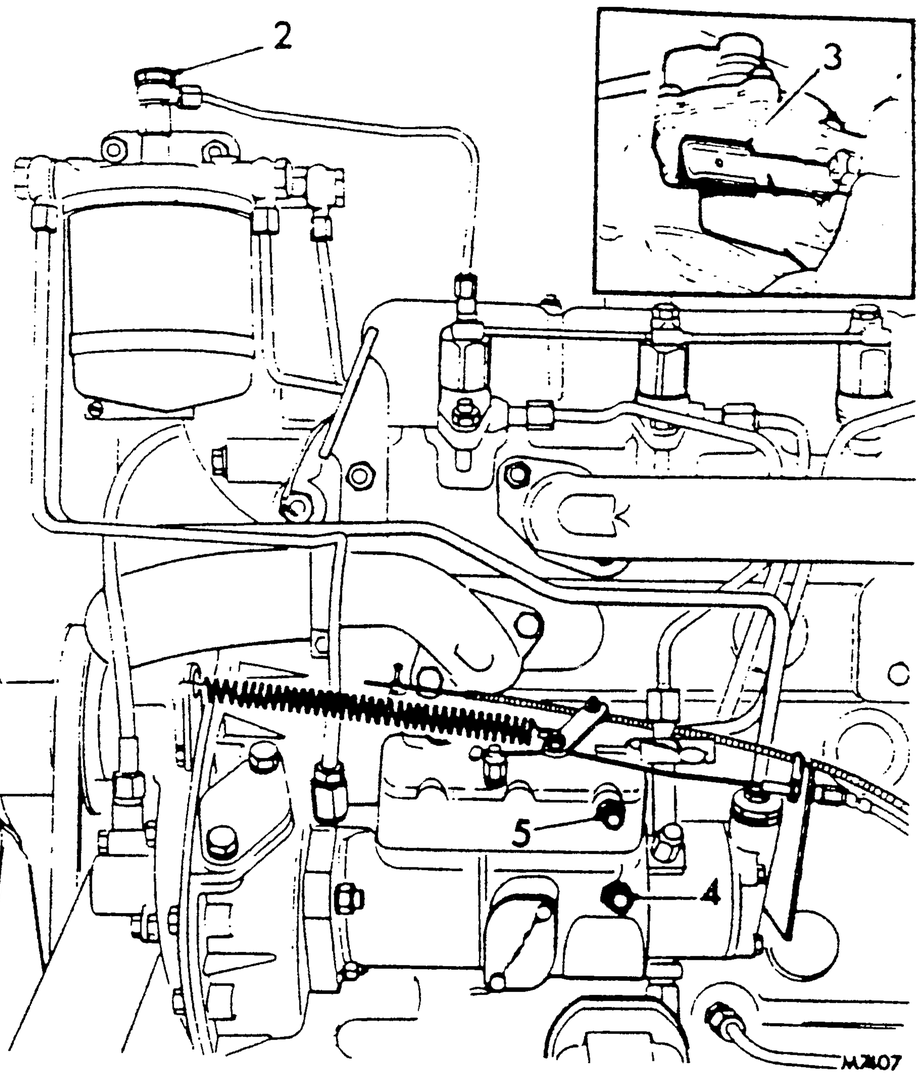

****All models except 245****

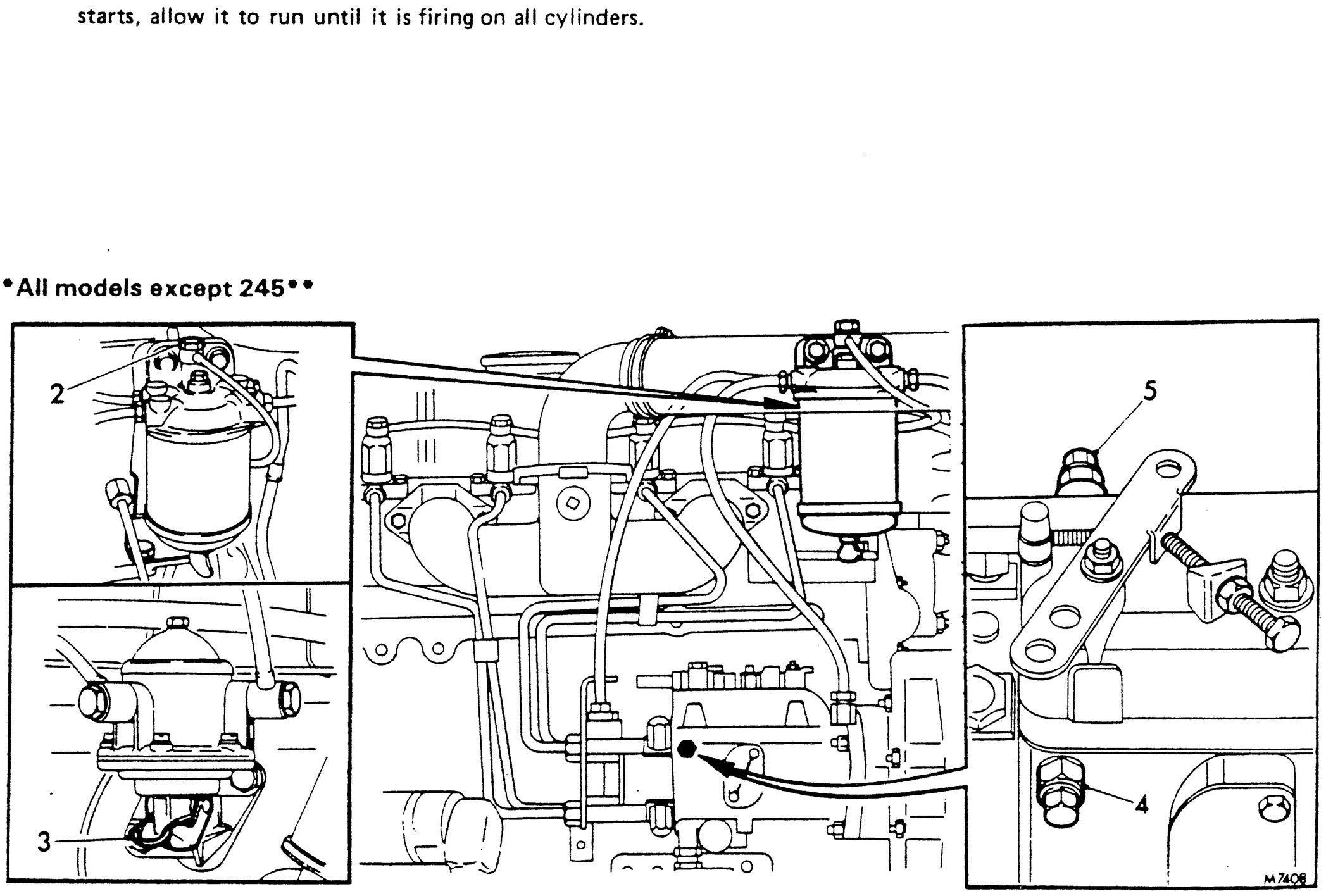

https://tractormanualz.com/

COOLING SYSTEM – All models

The cooling system is of the pressurised no-loss type; therefore, the radiator should not require topping-up unless the level of the expansion tank falls below the end of the siphon tube, causing air to be drawn into the radiator on cooling.
When topping-up the system ensure that the specific gravity of the anti-freeze solution is maintained, or that the correct proportion of corrosion inhibitor is added.
****NOTE:** 245 tractor is not illustrated.******

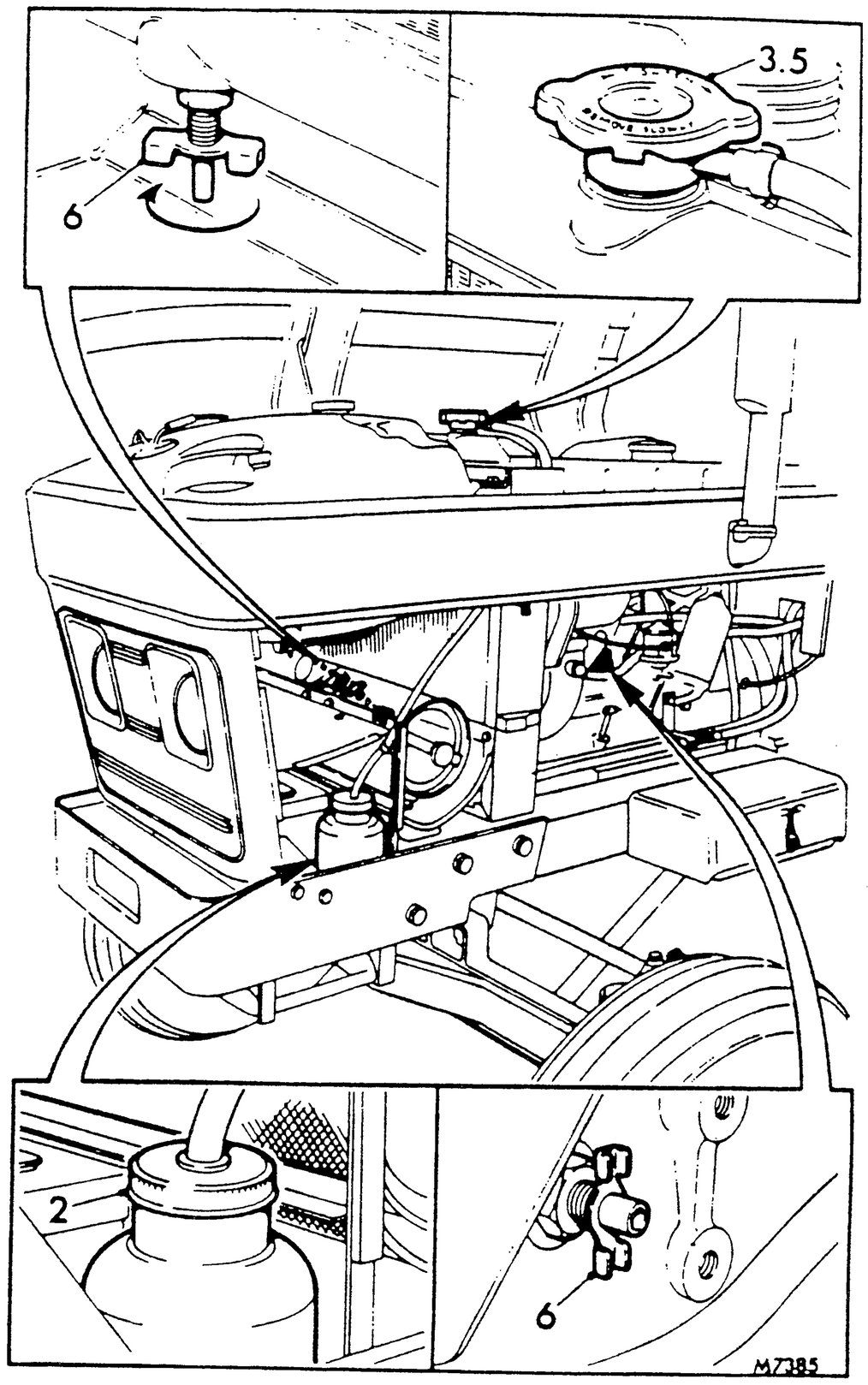

Topping-up expansion tank

1. Check coolant level in expansion tank.
2. Remove expansion tank filler cap and top up to approximately half full.

Topping-up radiator

3. Remove radiator cap.
   WARNING: Do not remove cap when system is hot.
4. Completely fill radiator and replace cap.

Drain and refill

5. Remove radiator cap when the engine is cold.
** 6. Remove drain plugs from engine and radiator or open drain taps if fitted, noting that on 245 models the engine drain plug is positioned above the oil filter.**
7. Flush system with clean water.
8. Close radiator and engine taps or refit engine drain plug.
9. Fill radiator with coolant.
10. Top-up expansion tank to approximately half full.
11. Refit radiator and expansion tank caps.
12. Run engine at fast idle for 30 seconds.
13. Stop engine and top-up radiator.

Preventative maintenance

The cooling system must be protected against freezing and corrosion by the addition of a recommended anti-freeze solution (see TB09) to the coolant. The anti-freeze may remain in the system for two winters and should be maintained at correct specific gravity.
In warm climates when no anti-freeze is available the cooling system must be protected against corrosion by the addition of a corrosion inhibitor to the coolant.

https://tractormanualz.com/

**AIR CLEANER ELEMENT—All models except turbocharged

1. Remove left-hand side panel and turn the fastener anti-clockwise.**
2. Push the securing bar in the direction of the arrow and lift the slotted end of the bar away from the housing.
3. Withdraw the element from the housing.
4. A dry element may be cleared of dust by tapping it lightly on a clean, dry tyre or alternatively by blowing air at a pressure of not more than 7,0 kgf/cm^2 (100 lbf/in^2) through the element from the inside. Do not **hold the air-line directly against the element.**
5. If the element is damp, oily, or contaminated by products of combustion, it should be cleaned by immersing in warm water, maximum temperature 38°C (100°F), containing a low lather detergent (e.g. 'Cooper Kleen' Detergent Air Filter Compound or Pat Low Lather) for 10 minutes. Agitate the element in the solution, then rinse the element by directing a gentle stream of **clean** water through the element from the inside until all traces of dirt and detergent have been removed. Dry the element at normal room temperature for at least 24 hours; **do not oven-dry or use compressed air.**
6. After washing, the element should be inspected for damage by placing a bright light inside. The element should be replaced if the slightest damage (pin-holes or thin spots) is evident.
7. Fit a new element at the interval given in the **'MAINTENANCE SCHEDULE'**, after 10 washes, or if the slightest damage to the filter paper, seals or body is evident.
8. Clean all parts of the filter body with a damp cloth and ensure that the rubber dust valve is clear. The dust valve should be renewed if it is split, excessively abraded, or if the lips adhere together.
9. Reassemble the air cleaner by reversing procedure 1 to 3 and ensure that all seals are made air-tight.

NOTE: In very dusty conditions the element should be checked at more frequent intervals. Signs that the element requires attention are loss of power, irregular running and a smoking exhaust.

Never run the engine with the air filter removed or refit a faulty element, gasket or seal.

Never use oil on the element or wash it with fuel oil, petrol or solvent.

Do not use exhaust gases to blow the element clear.

Do not fit a wet element. Always keep a spare element to prevent the tractor being out of service when an element is being washed and dried. Store the spare element in cool, dry, clean conditions.

245

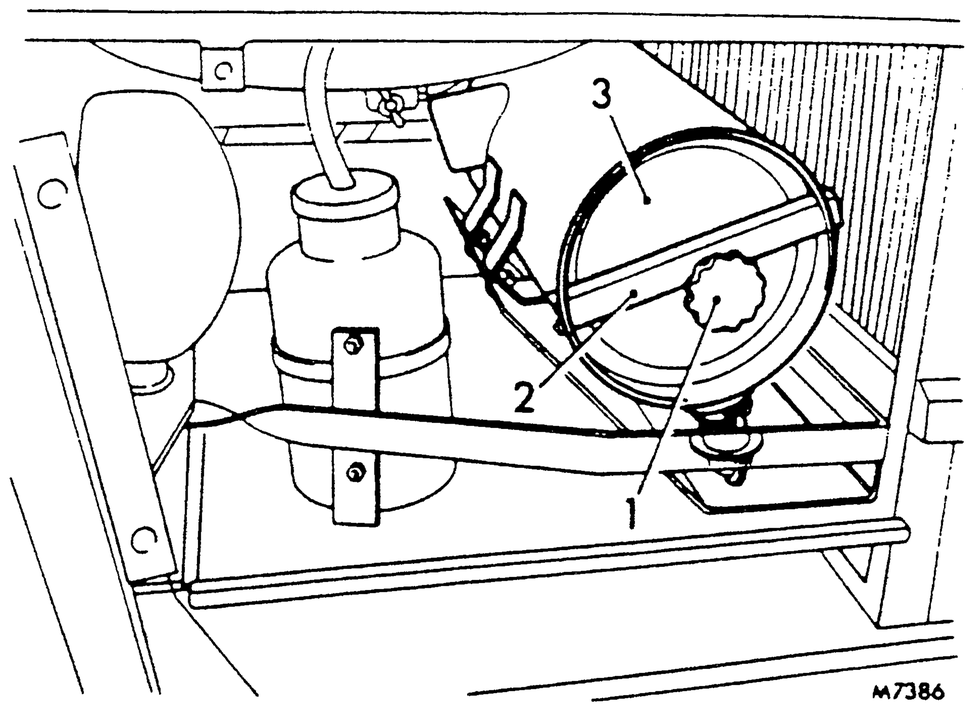

262/272/462/472

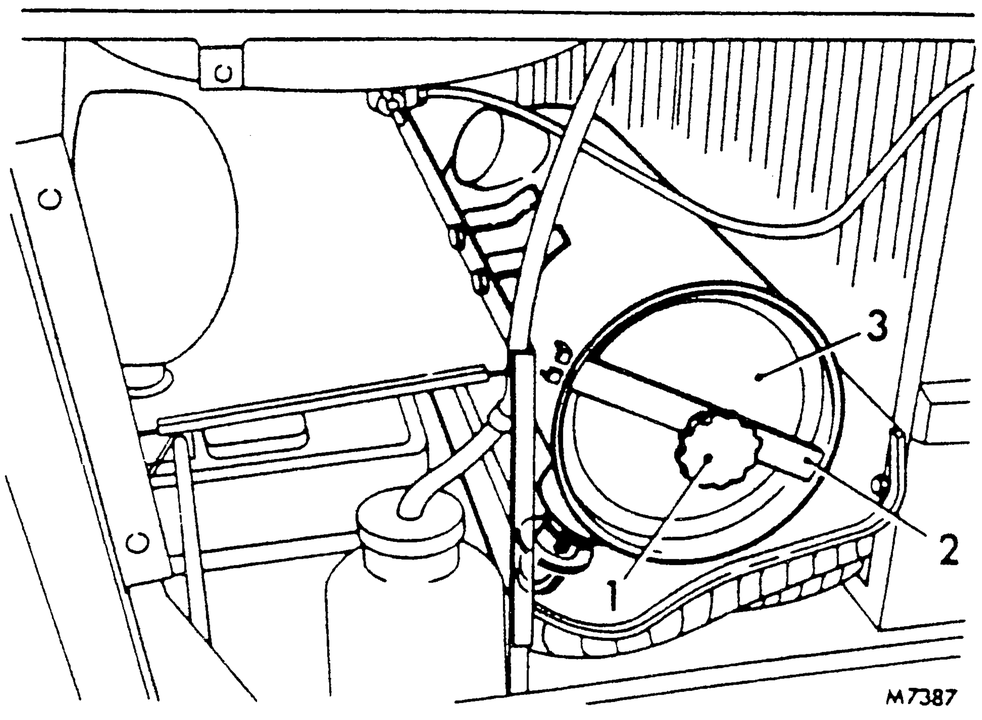

https://tractormanualz.com/

AIR CLEANER ELEMENT — Turbocharged models

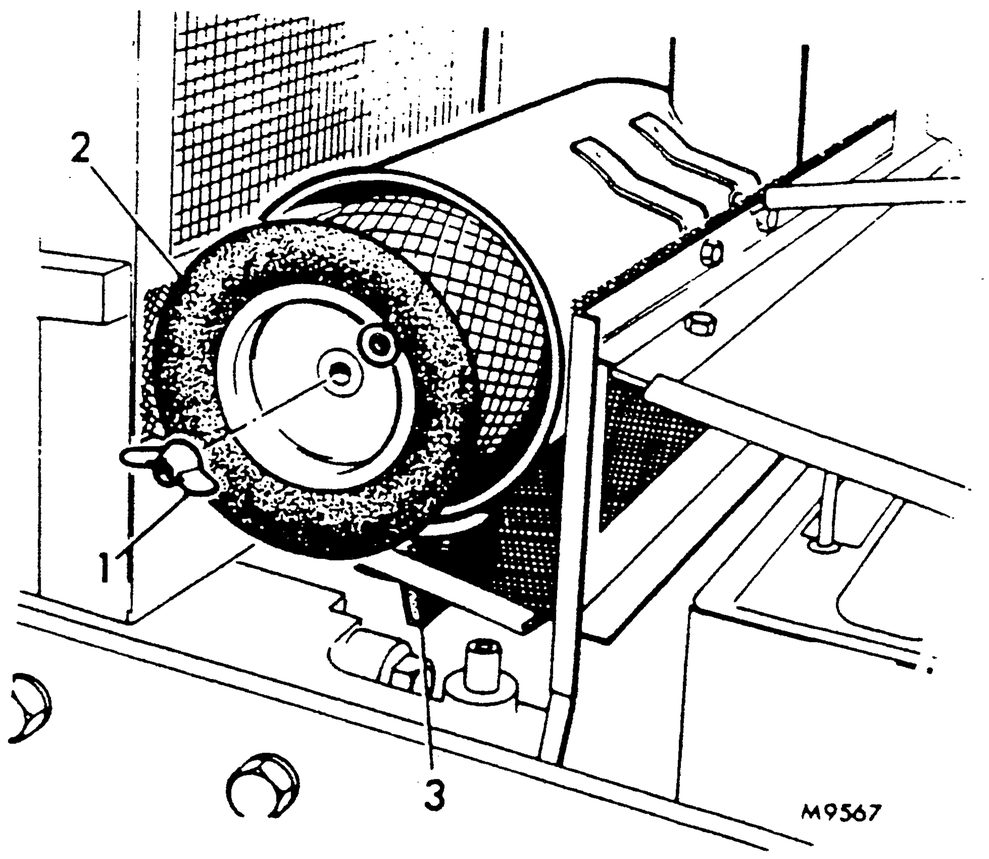

1. Remove right-hand side panel and release wing-nut.
2. Withdraw primary filter element from housing.
   NOTE: Do not remove the inner safety element (if fitted).
3. Clean all parts of the filter body with a damp cloth and ensure that the rubber unloader valve is clear. The valve should be regularly inspected to ensure that it is functioning correctly, and renewed if it is split, excessively abraded, or the lips adhere together.
   Dust accumulations on the clean air side of the primary element usually indicates a rupture in the filter which must be replaced immediately.
   Dust accumulations on the outlet side of the housing is usually caused by leaking gaskets.
4. The element may be cleaned of dust by reverse flushing with clean water, directed up and down the pleats on the clean side of the element, using a hose at no greater pressure than 3 kgf/cm² (40 lbf/in²). Alternatively, the element may be cleaned by reverse flushing with a stream of compressed air directed up and down the pleats on the clean side of the element, reduced to less than 2 kgf/cm² (30 lbf/in²) pressure.
5. If the element is oily or contaminated by products of combustion it should be cleaned by immersing in warm water, maximum temperature 40°C (104°F), for 10 minutes containing 59,6 cm³ (four tablespoons) of mild household detergent and 2,5 cm³ (one-half teaspoon) of trisodium phosphate added to every 4,5 litres (1 gallon) of water. Gently agitate in the solution then thoroughly rinse the element from the inside. Shake element carefully to remove excess water and allow to dry at room temperature for at least 24 hours.
   CAUTION: Mechanical drying methods can be used; however, heated air must have some circulation and must not exceed 80°C (176°F).
   Do not use a light bulb or compressed air to dry the element. Protect the element from dirt and/or freezing while drying.
6. After cleaning, the element should be inspected for damage by placing a bright light inside. The element should be replaced if the slightest damage (pinholes or thin spots) is evident.
7. Fit a new element at the interval given in the **'MAINTENANCE SCHEDULE'**, after six washes or if the slightest damage to the filter paper, seals or body is evident.
8. **Safety element** (optional fitment). **Do not** clean the inner safety element. Replace it once a year or sooner if required.
9. Reassemble the air cleaner by reversing the removal procedure.
   NOTE: In very dusty conditions the element should be checked at more frequent intervals. Signs of the element requiring attention are loss of power, irregular running and a smoking exhaust. If these symptoms continue after the main element is cleaned the inner safety element (if fitted) should be replaced.
   Never run the engine with the air filter removed or refit a faulty element gasket or seal.
   Never use oil on the element or wash it with fuel oil, petrol or solvent.
   Do not use exhaust gases to blow the element clear.
   Do not fit a wet element. Always keep a spare element to prevent the tractor being out of service when the element is being washed or dried. Store the spare element in cool, dry, clean conditions.

https://tractormanualz.com/

TRANSMISSION—TWO-WHEEL DRIVE MODELS

Checking oil level

Ensure tractor is standing on level surface.

1. Remove level plug.
2. Remove filler/return plug assembly from cross-shaft.
3. Add oil of correct specification (see TB09) until it starts to flow from the level plug hole.
4. Refit plugs.

Draining and refilling

NOTE: It is better to drain the oil when it is warm after several hours' work.

5. Place a container under the drain plug capable of receiving at least 57.5 litres (12.5 gallons).
6. Remove and clean drain plugs.
7. Refit plugs when transmission has drained.
8. Refill, following procedure 1 to 4.

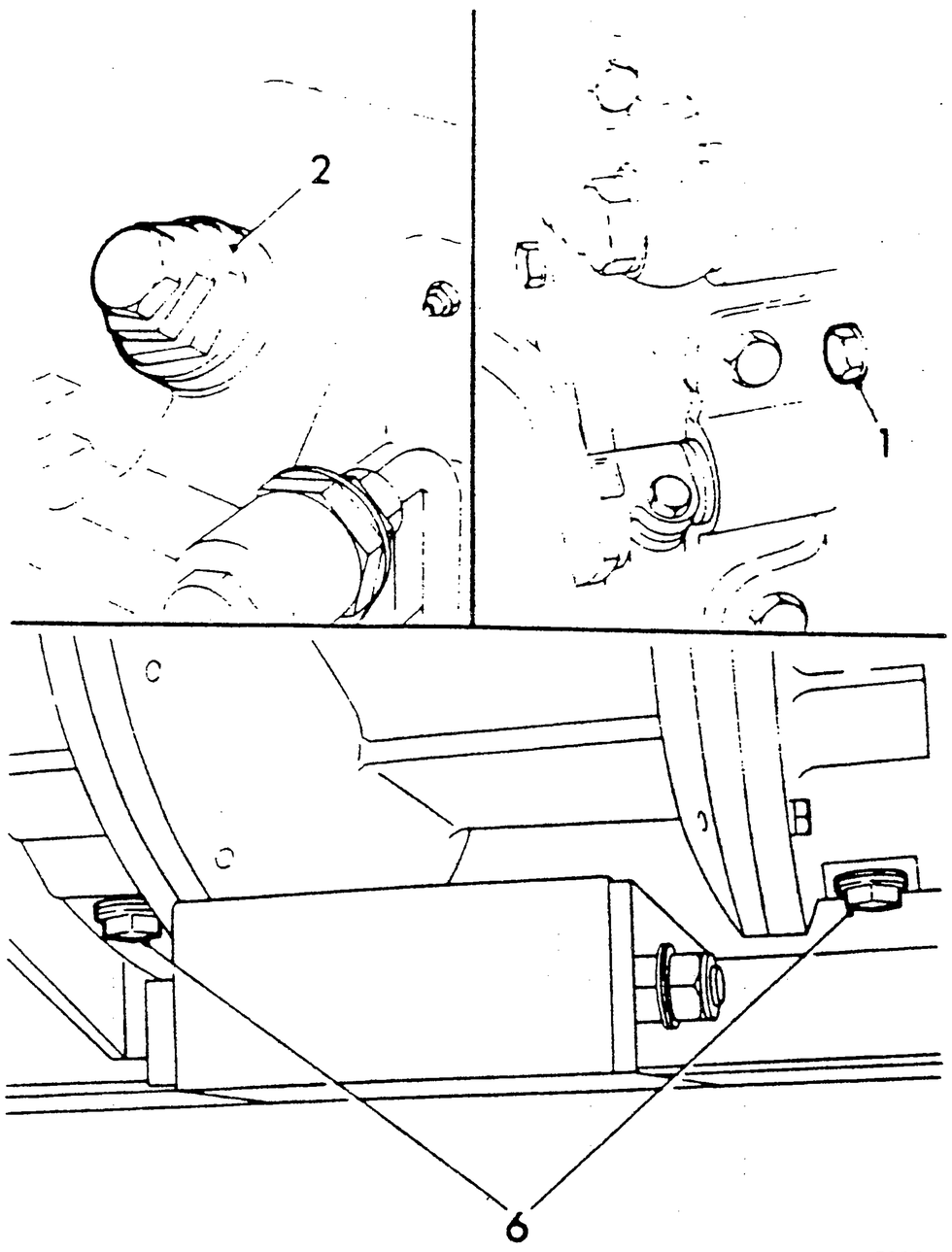

M7388

TRANSMISSION—FOUR-WHEEL DRIVE MODELS

Checking oil level

** 1. Follow operations 1 to 4—see two-wheel drive.**

Draining and refilling

NOTE: It is better to drain the oil when it is warm after several hours' work.

** 2. Drain oil as detailed for two-wheel drive and remove plug to drain oil from drop box, noting capacity of oil is 59,3 litres (13 gallons).
3. Clean and refit plugs when transmission has drained.
4. Refill, following operations 1 to 4 of two-wheel drive.**

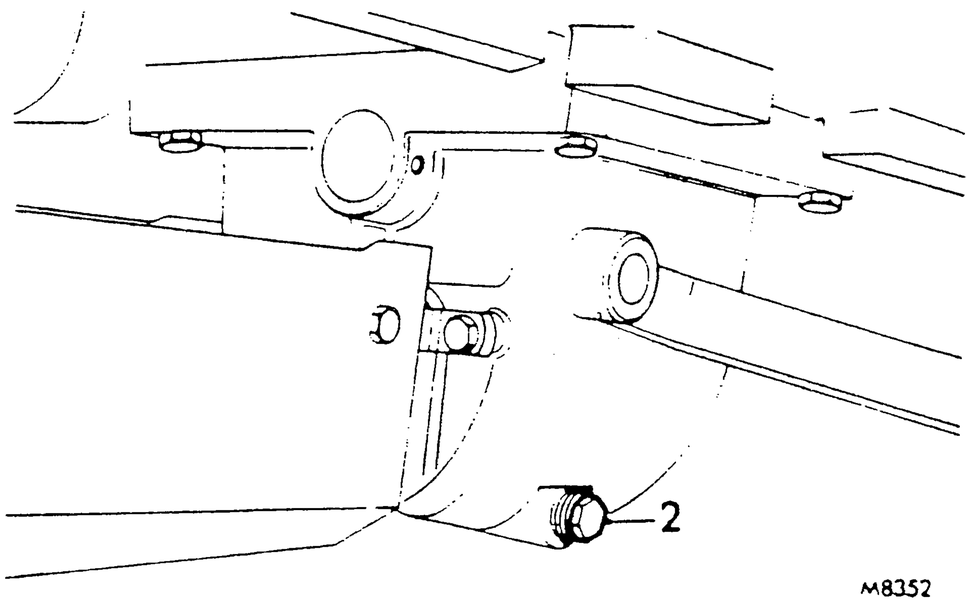

M8352

**FRONT AXLE—FOUR-WHEEL-DRIVE MODELS

To fill or top-up hubs

Ensure tractor is standing on level surface.

1. Position filler/drain plug at its highest position and remove plug.
2. Remove level plug and add oil until it starts to flow from the level plug hole.
3. Refit plugs.

To drain hubs

4. Position filler/drain plug at its lowest level and remove both plugs.

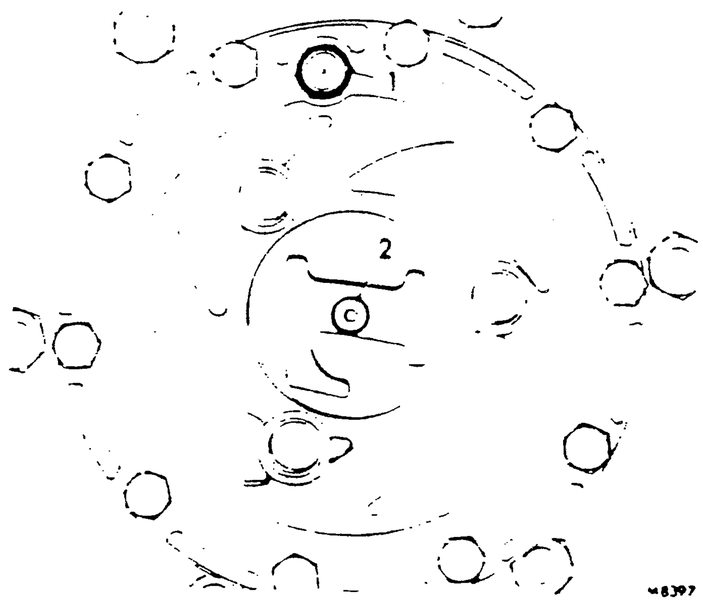

M8397

https://tractormanualz.com/

To fill or top up centre casing

1. Remove level plug and add oil until it flows from filler/level plug hole, then refit plugs.

To drain centre casing

2. Place a container under the drain plug capable of holding at least 6 litres (10.56 pints).
3. Remove and clean drain plug.

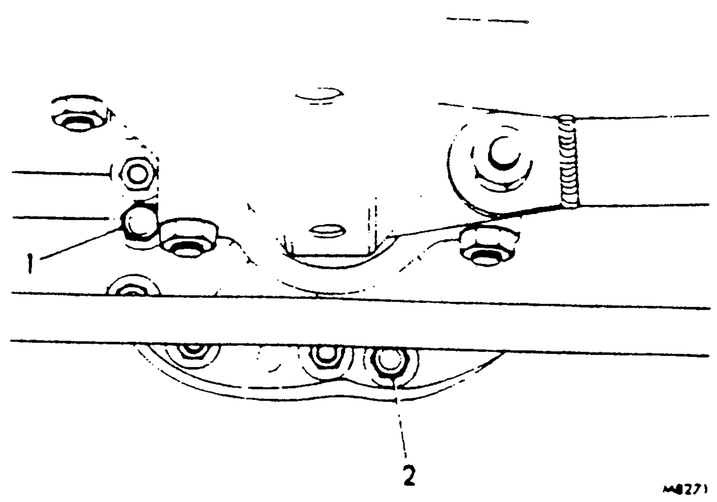

FAN BELT

****Check and adjust tension—All models except turbocharged****

The correct belt tension gives approximately 13 mm (0.5 in) deflection at the mid point of the longest run between pulleys under normal thumb pressure.

** 1. Remove L.H. side panel and disconnect earth lead from battery negative (—) terminal.**
2. Slacken adjusting link setscrew and pivot bolt(s).
3. Move alternator outward to tension drive belt, then tighten adjusting link setscrew and pivot bolt; check tension.

   NOTE: Do not apply leverage to any part of the alternator other than the alternator drive bracket.
4. Connect earth lead to battery negative (—) terminal and fit L.H. side panel.

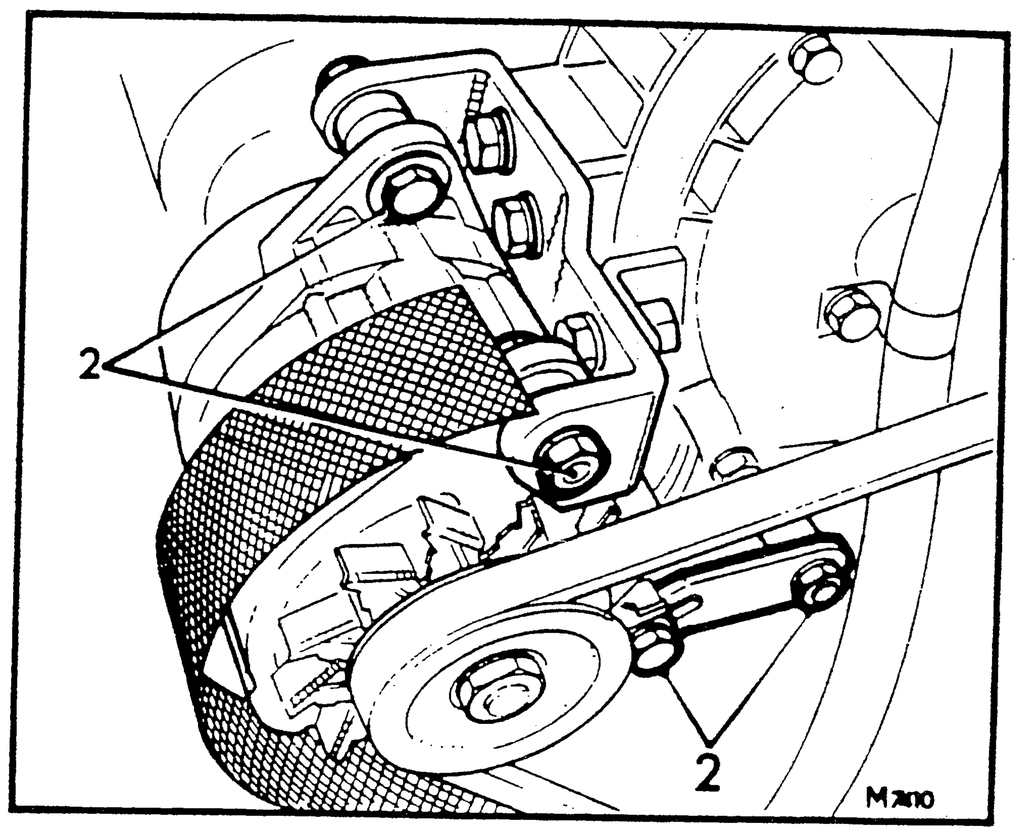

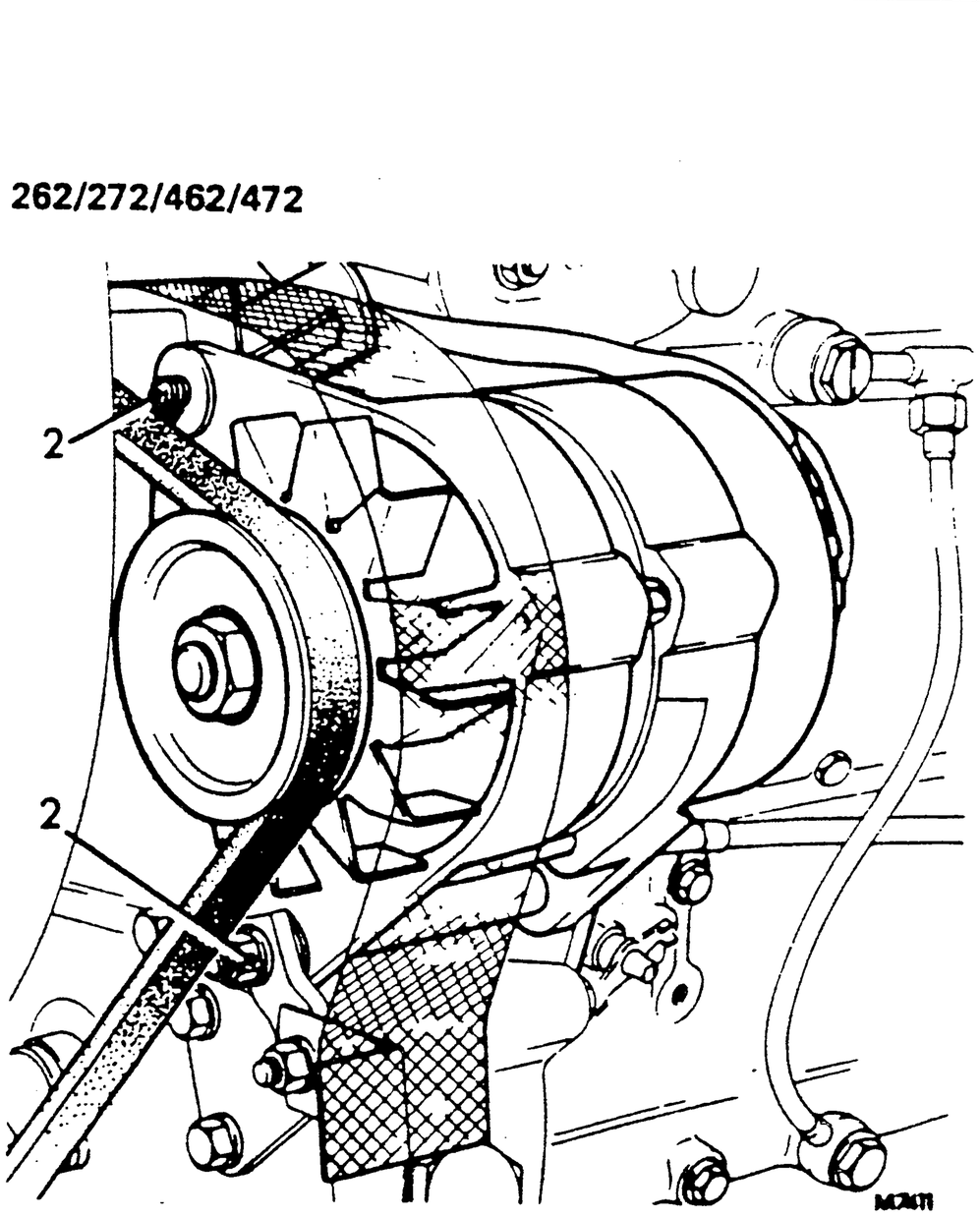

https://tractormanualz.com/

**FAN BELT

**282/482

Check and adjust tension—Turbocharged models

The correct belt tension gives approximately 13 mm (0.5 in) deflection at the mid point of the longest run between pulleys under normal thumb pressure.

1. Remove L.H. side panel, disconnect earth lead from battery negative (—) terminal and slacken the alternator mounting bolt.
2. Slacken adjusting link setscrews.
3. Ensure that the belt is correctly seated in the pulleys and move the alternator outwards to tension drive belt.
4. Tighten adjusting link setscrews and pivot bolt; check belt tension.
   NOTE: Do not apply leverage to any part of the alternator other than the alternator drive bracket.
5. Connect earth lead to battery and fit side panel.**

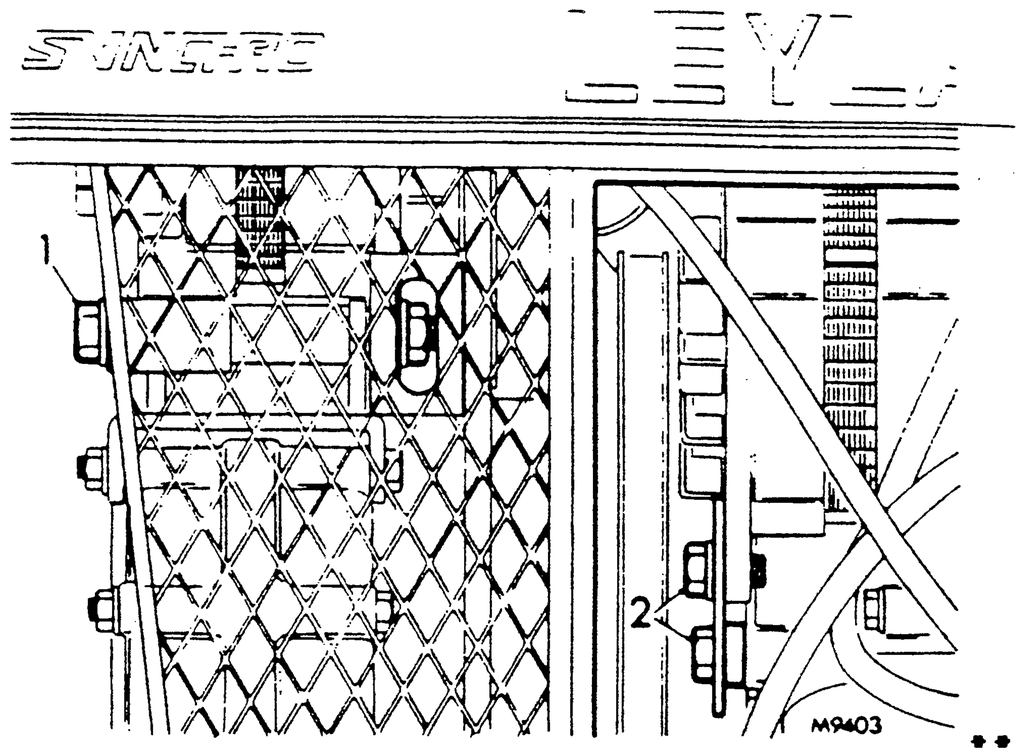

https://tractormanualz.com/

BRAKES – All models

Topping-up master cylinder reservoir

1. Check fluid level in reservoir.
2. If required, clean exterior of reservoir, remove cap and top-up to maximum level.
   WARNING: Use clean, new fluid of correct specification (see TB09) from a sealed container and ensure that no dirt enters the reservoir. Absorbed water or dirt in the system can result in sudden failures. Do not shake the container or aerate the fluid in any way. Keep fluid away from all paintwork.
3. Check breather hole in cap is clear.
4. Refit cap.

Brake bleeding

5. Chock the wheels and release the handbrake.
** 6. Check that the free travel (B) of each brake pedal pad is 6 to 12 mm (0.25 to 0.5 in) before the push-rod contacts the master cylinder piston.**
7. Adjust the return stop screws if required, clockwise to increase, anti-clockwise to decrease the free travel.
8. Attach a rubber tube to the bleed screw on the slave cylinder and submerge the free end in a small quantity of brake fluid held in a transparent container.
9. Slacken the bleed screw one complete turn.
10. Push the pedal down through one full stroke followed by three short rapid strokes, then allow the pedal to return quickly to its stop.
11. Repeat this action ensuring that the fluid reservoir is maintained full, until the fluid flowing into the container is free from air bubbles, then on the last downward stroke of the pedal tighten the bleedscrew to 7 Nm (0,7 kgf m, 5 lbf ft).
    NOTE: Do not re-use fluid expelled from the system.

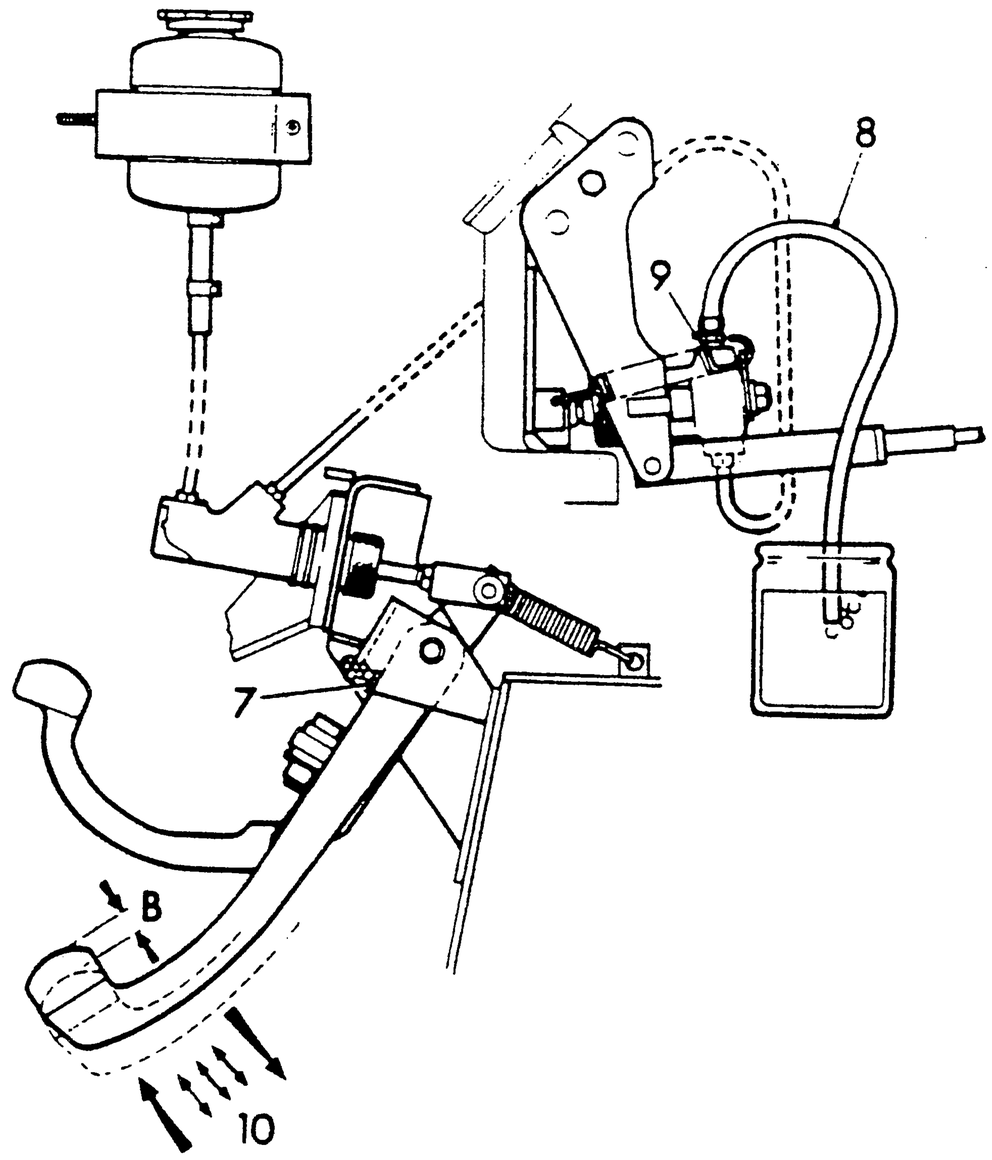

M7389

**

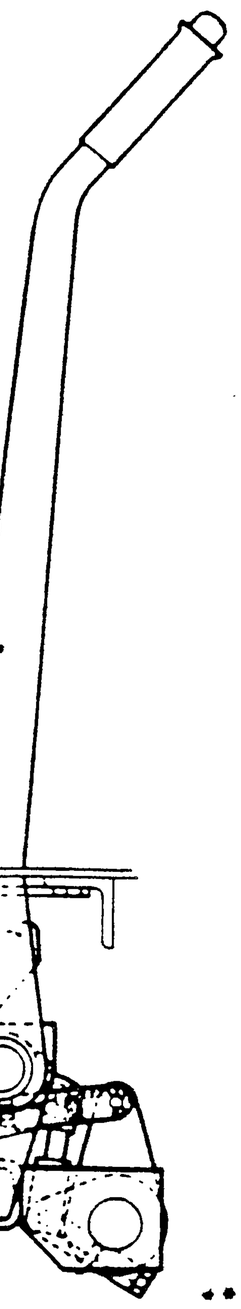

Handbrake adjustment—two-wheel-drive models

12. Chock front wheel and release handbrake.
13. Jack up rear wheels clear of ground; position additional supports beneath rear axle.

NOTE: The following procedure should be strictly adhered to.

14. Ensure that there is clearance (A) between the nut link and each brake; slacken the nuts if required.
15. Turn the adjusting nut clockwise while rotating the wheel, until the brake is just applied and the wheel cannot be rotated by hand, then back off the nut one turn (6 flats). Repeat for the other brake.
16. Apply the handbrake, one notch at a time, while rotating the rear wheels to ensure that it applies the brake evenly, with a maximum travel of four notches. Adjust the nuts on each each brake to obtain the correct setting.
17. **When the handbrake lever is in the off position, fully forward, check that there is a clearance (A) between the nut and link on each brake.**

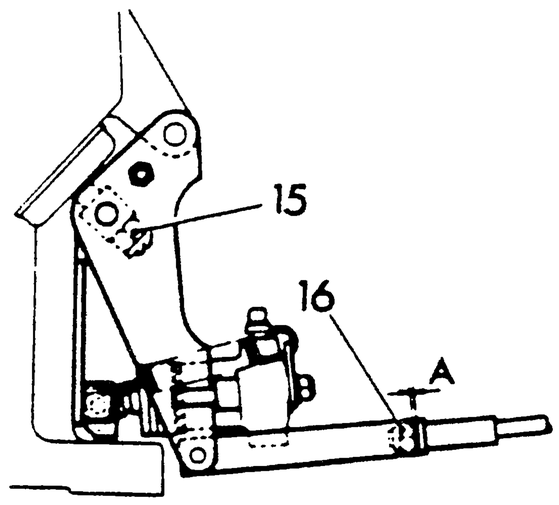

M7390

**

**Handbrake adjustment—four-wheel-drive models

1. Disconnect earth lead from battery negative terminal.
2. Chock front wheels and release handbrake.
3. Jack either of the rear wheels clear of the ground.
4. Turn the adjusting nut clockwise while rotating the wheel, until the brake is just applied and the wheel cannot be rotated by hand, then slacken the nut one turn (6 flats). Repeat the procedure for the other brake.
   NOTE: The handbrake should not normally need adjusting only if the travel exceeds four clicks of the ratchet.
5. Adjust the nut on each brake linkage until the handbrake travel is correct.
6. Apply handbrake and remove chocks from front wheels.
7. Re-connect battery.**

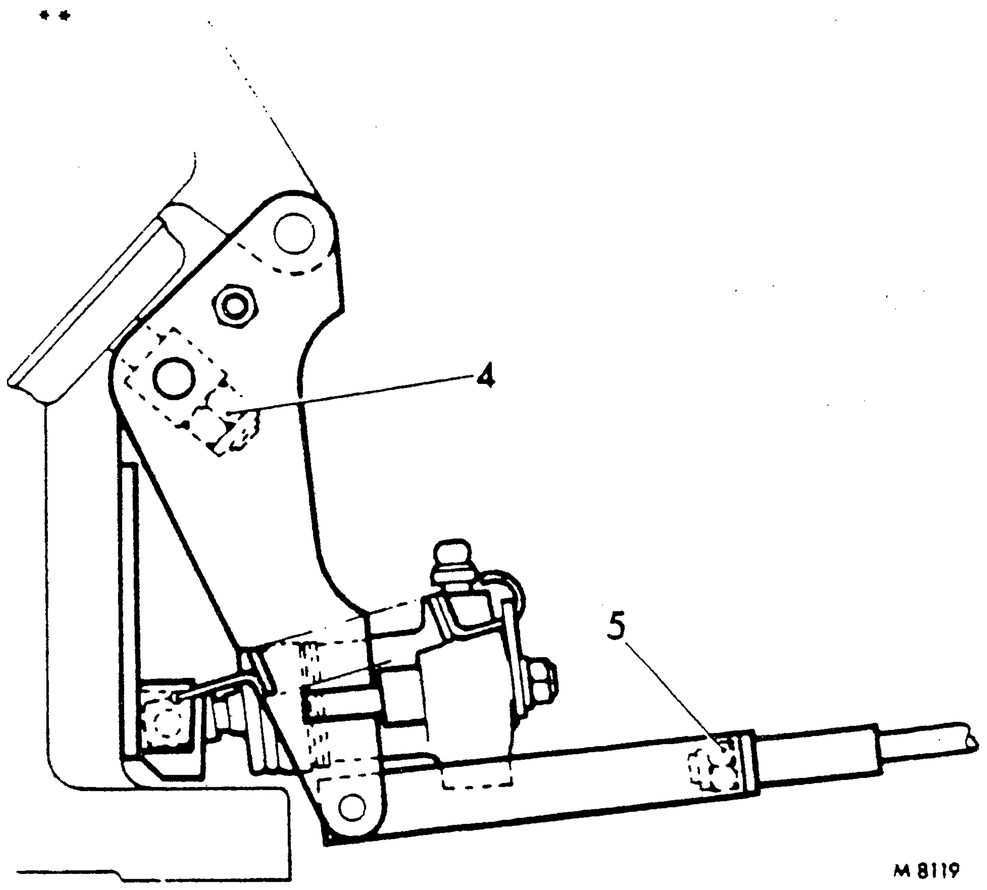

Preventative maintenance

As the tractor ages it is advisable to protect against the effects of wear and deterioration which may cause sudden brake failures. It is recommended that the following procedures be carried out at the periods laid down in the **'MAINTENANCE SUMMARY'.**

1. Examine brake pipes and unions for chafing, leaks and corrosion, and replace as necessary.
2. Change the brake fluid by the same procedure as bleeding, noting the following:
   a. The bleed tube should have a transparent section (glass tube).
   b. Pump out most, but not all, of the fluid in the reservoir before refilling with unused fluid.
   c. Bleed until all the old, discoloured fluid is ejected; continue to bleed for two full strokes of the pedal, then close the bleedscrew.
3. Overhaul the master and slave cylinders, renewing parts as necessary (see TB70.25.53, TB70.25.54 and TB70.25.47).

https://tractormanualz.com/

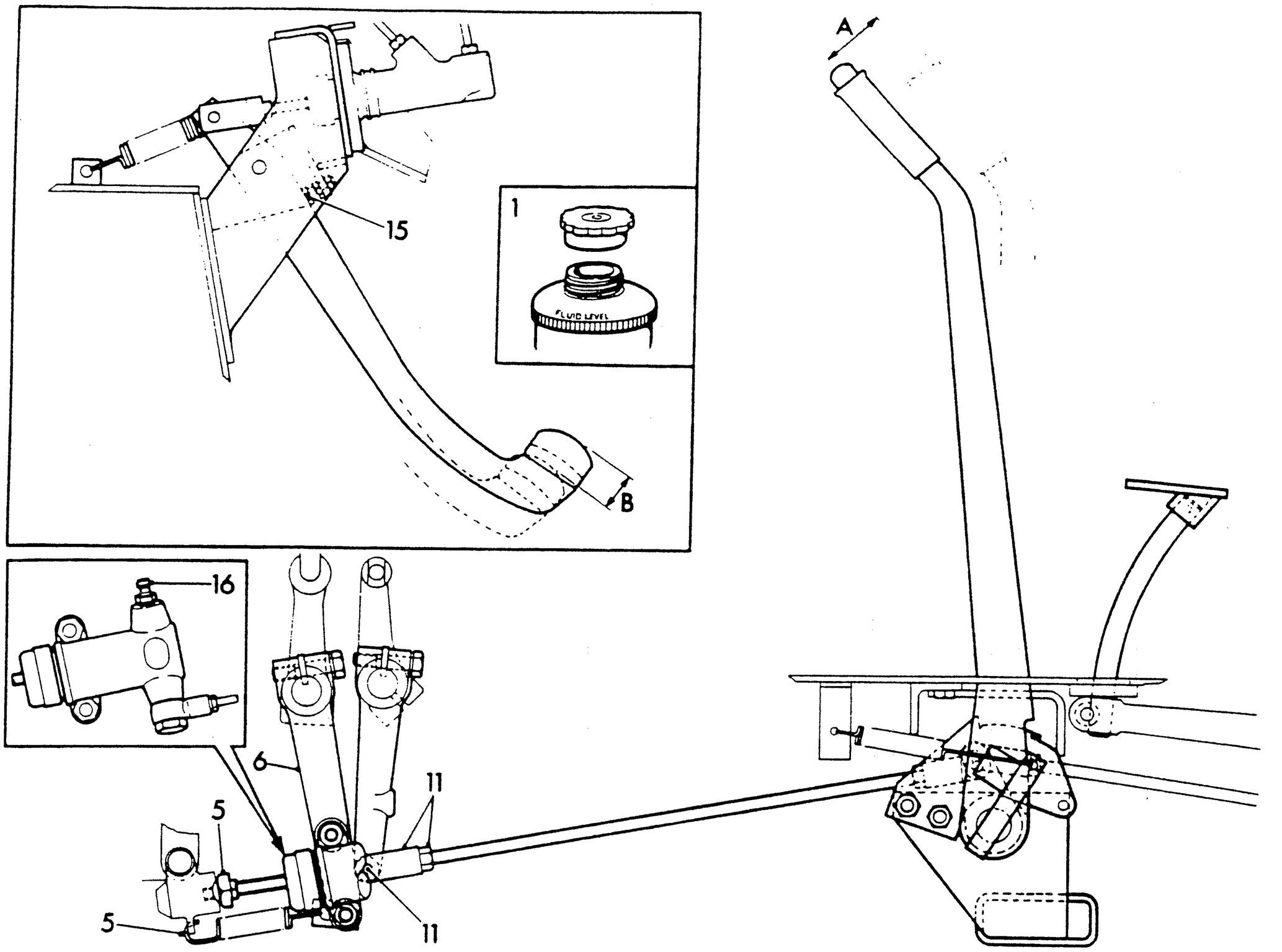

CLUTCH — All models

Topping-up master cylinder reservoir

1. Check fluid level in reservoir.
2. If required, clean exterior of reservoir, remove cap and top-up to maximum level.
   WARNING: Use clean, new fluid of correct specification (see TB09) from a sealed container and ensure that no dirt enters the reservoir. Absorbed water or dirt in the system can result in sudden failures. Do not shake the container or aerate the fluid in any way. Keep fluid away from all paintwork.
3. Check breather hole in cap is clear.
4. Refit cap.

Adjustment

Main clutch

5. Unhook the return spring and unlock the nut from the adjuster.
6. Turn the adjuster, clockwise viewed from the rear, until the free movement of the lever is just eliminated.
7. Back off the adjuster anti-clockwise 2⅓ revolutions (14 flats of the hexagon), ensuring that the push-rod is not allowed to turn, then lock it in this position with the nut.
8. Check that the lever free movement is now approximately 2,5 mm (0,1 in), then refit the return spring.
9. Check that the clutch releases fully when the pedal is depressed. Bleed the system if the pedal feels spongy.

https://tractormanualz.com/

I.P.T.O. clutch

10. The free travel 'A' of the I.P.T.O. clutch hand lever from the fully forward position should be 35 mm (1.4 in).
11. If required, remove the clevis pin, slacken the locknuts and turn the fork ends to adjust the length of the rod until the free travel is correct when the clevis pin is refitted.
12. Tighten the locknuts.
13. Check that the I.P.T.O. clutch releases fully when the hand lever is pulled rearward to its catch or the foot pedal is depressed.

Bleeding

14. Check that the free travel (B) of the clutch pedal is 6 to 12 mm (0.25 to 0.5 in) before the push-rod contacts the master cylinder piston.
15. Adjust the return stop screw if required, clockwise to increase, anti-clockwise to decrease the free travel.
16. Attach a rubber tube to the bleed screw and submerge the free end in a small quantity of brake fluid held in a transparent container.
17. Slacken the bleed screw one complete turn.
18. Push the pedal down through one full stroke followed by three short rapid strokes, then allow the pedal to return quickly to its stop.
19. Repeat this action ensuring that the fluid reservoir is maintained full, until the fluid flowing into the container is free from air bubbles, then on the last downward stroke of the pedal tighten the bleedscrew to 7 Nm (0,7 kgf m, 5 lbf ft).
    NOTE: Do not re-use fluid expelled from the system.

Preventative maintenance

As the tractor ages it is advisable to protect against the effects of wear and deterioration which may cause sudden failures. It is recommended that the following procedures be carried out at the periods laid down in the 'MAINTENANCE SUMMARY'.

20. Examine pipes and unions for chafing, leaks and corrosion, and replace as necessary.
21. Change the fluid by the same procedure as bleeding, noting the following:
    a. The bleed tube should have a transparent section (glass tube).
    b. Pump out most, but not all, of the fluid in the reservoir before filling with unused fluid.
    c. Bleed until all the old, discoloured fluid is ejected; continue to bleed for two full strokes of the pedals, then close the bleed screw.
22. Overhaul the master and slave cylinders, renewing parts as necessary (see TB33.20.07 and TB33.35.07).

https://tractormanualz.com/

POWER STEERING PUMP – 245

Topping-up reservoir

1. Clean area around filler/level plug.
2. Start engine, turn wheels to full right lock, remove plug and top up reservoir to bottom of filler/level plug hole.

****NOTE:** Ensure correct grade of oil is used for steering system, see TB09.**

3. Turn the steering from lock to lock several times to expel air from the system.
4. Turn wheel to full right lock and check the reservoir level.
5. Repeat operations 3 and 4 until the reservoir level at full right lock remains constant, then refit filler/level plug.

Filter element renewal

NOTE: Absolute cleanliness is essential at all times. Oil of the correct grade (see TB09) must be used.

1. Remove the filler/level plug.
2. Slacken the three screws retaining the tank to the pump casting and allow the oil to drain into a suitable container.
3. Remove the screws and tank.
4. Remove the spring and discard the filter element.
5. Clean out the tank.
6. Examine the tank casting seal, and renew if necessary.
7. Fit a new element and reassemble the retaining spring and tank to the pump.
8. Tighten the screws to 0,38 to 0,44 kgf m (2.75 to 3.25 lbf ft).
9. Fill reservoir following procedure above.
10. Test steering and check reservoir for leaks.

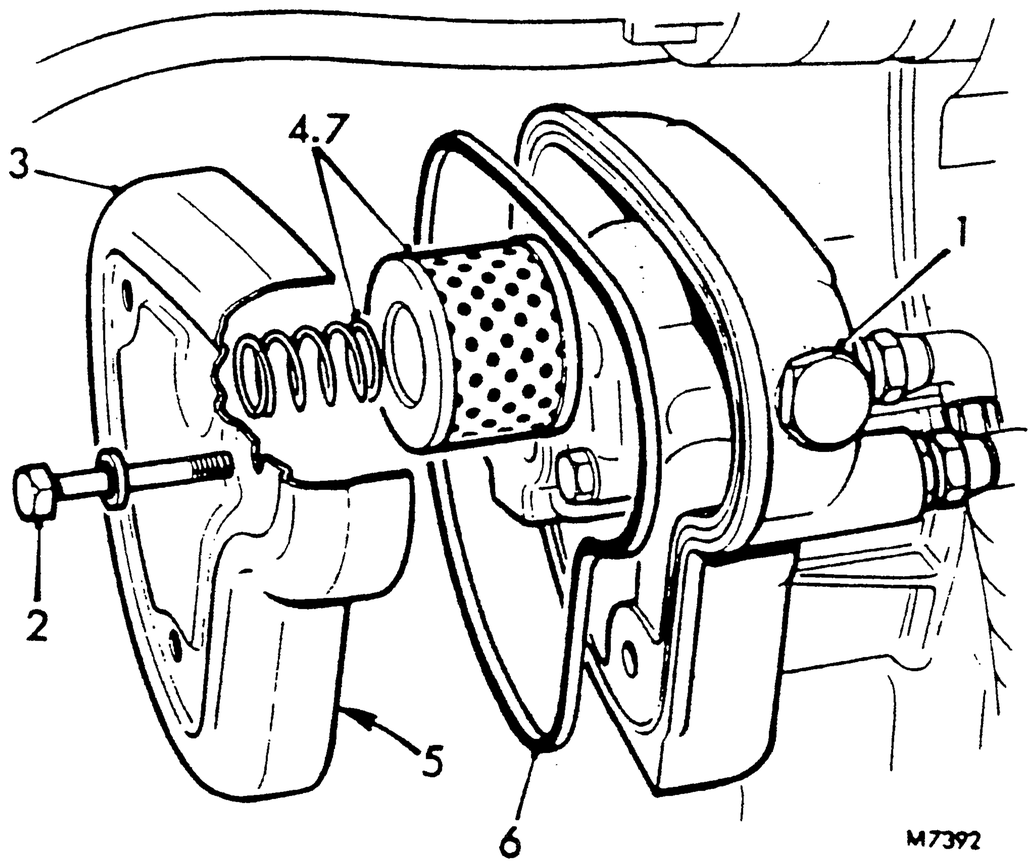

https://tractormanualz.com/

POWER STEERING PUMP—All models except 245

Topping-up reservoir

1. Clean area around filler/level plug.
2. Start engine, turn wheels to full right lock, remove plug and top-up reservoir to bottom of filler/level plug hole.

   ****NOTE:** Ensure correct grade of oil is used for steering system, see TB09.**
3. Turn the steering from lock to lock several times to expel air from the system.
4. Turn wheel to full right lock and check the reservoir level.
5. Repeat operations 3 and 4 until the reservoir level at full right lock remains constant, then refit filler/level plug.

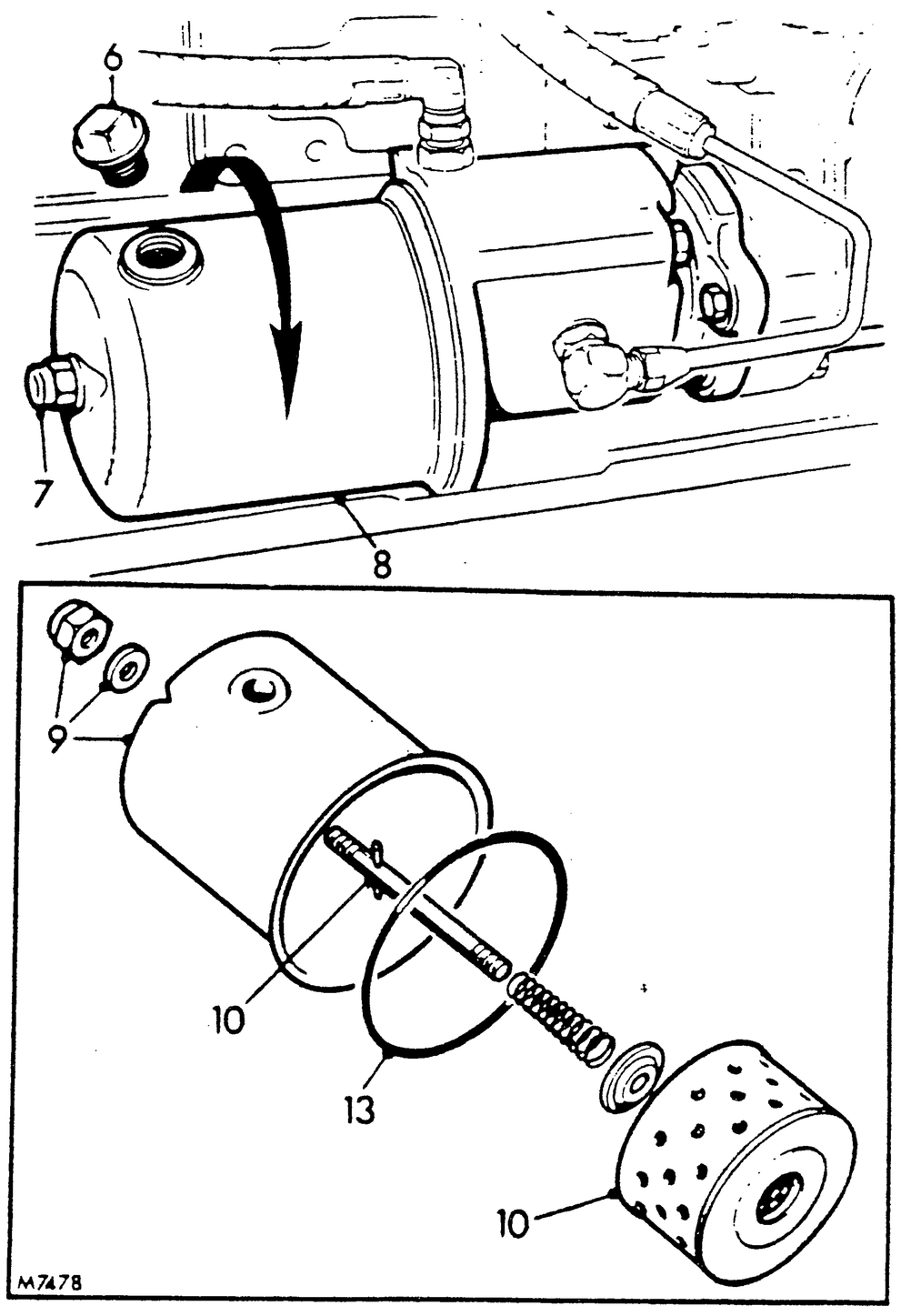

Filter element renewal

6. Remove filler/level plug.
7. Slacken reservoir securing nut.
8. Rotate reservoir to drain oil.
9. Remove nut and sealing washer and detach reservoir.
10. Unscrew reservoir mounting stud (using two nuts locked together on end of stud) and discard element.
11. Clean reservoir with a suitable solvent and dry thoroughly.
12. Fit a new filter element and tighten stud. 11 to 27 Nm (1,1 to 2,8 kgf m, 8 to 20 lbf ft).
13. Renew reservoir sealing gasket.
14. Refit reservoir, sealing washer and nut, ensuring projection in reservoir bowl locates in slot in rear cover and tighten nut. 3 to 4 Nm (0,3 to 0,4 kgf m, 2 to 3 lbf ft).
15. Fill reservoir following procedure above.
16. Test steering and check reservoir for leaks.

https://tractormanualz.com/

HYDRAULICS

By-pass filter

NOTE: On later models this filter is mounted horizontally.

1. Remove the central bolt and bowl.
2. Remove and discard the filter element.
3. Clean the bowl with a suitable solvent, fit a new element and reassemble the bowl to the filter head, using a new bowl sealing gasket.

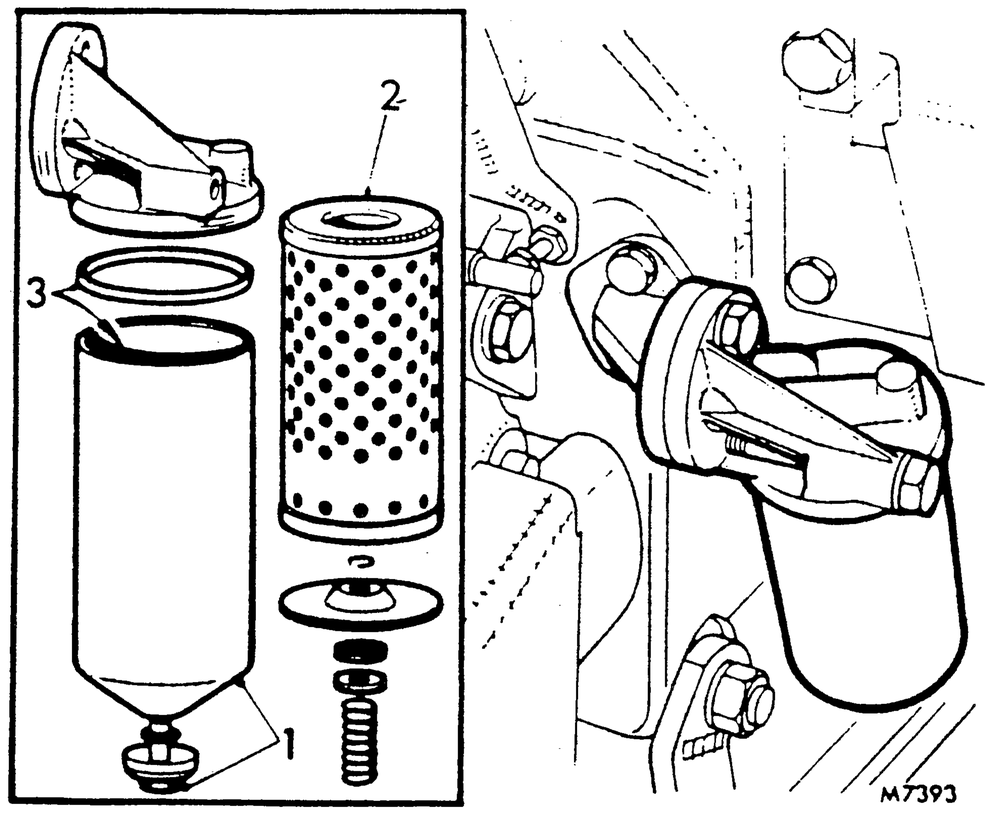

Valve chest to cylinder filter

1. Remove screw, washer and cover-plate.
2. Pull ring from its groove in the bore.
3. Withdraw the end plate, using a suitable bolt screwed into the tapped hole.
4. Remove the spring.
5. Remove element and element seal.
6. Reverse the removing procedure to refit, ensuring the element seal and O-ring seal on the end plate are serviceable.

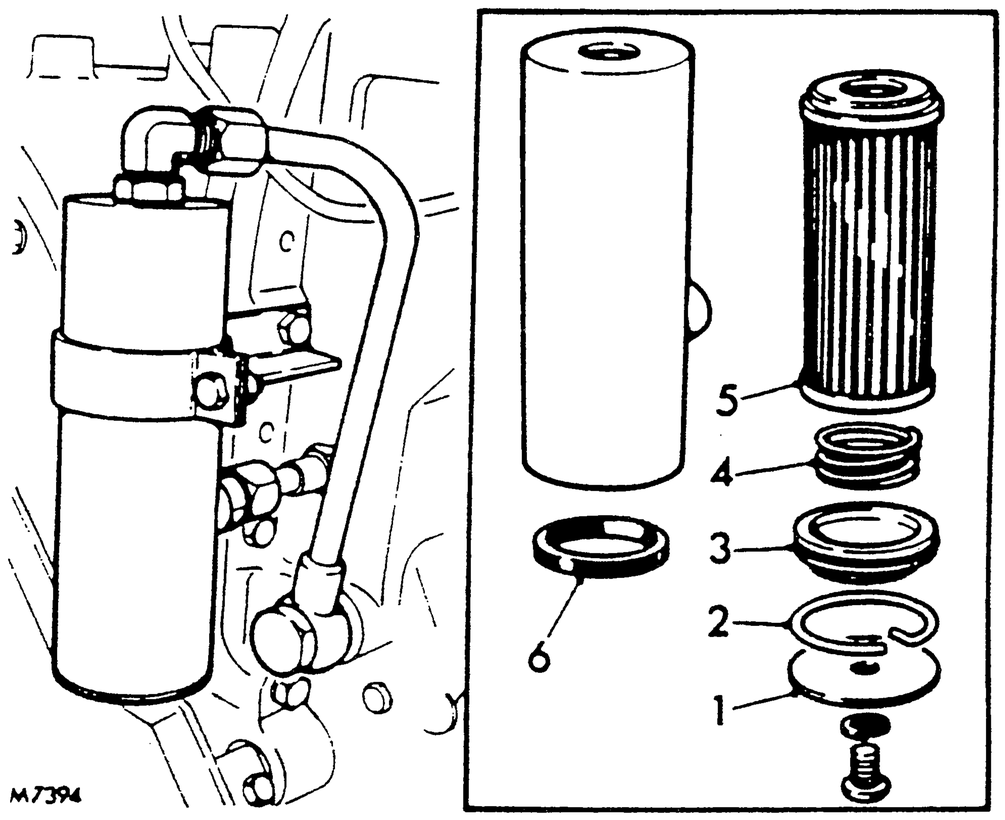

https://tractormanualz.com/

Hydraulic power unit oil strainer

1. Drain the transmission oil and remove the hydraulic power unit complete.
2. Remove the two nuts and spring washers securing the strainer housing to the retaining brackets.
3. Push the strainer housing slightly towards the front of the tractor.
4. Remove the nuts and spring washers securing the brackets and remove the brackets. Withdraw the strainer housing.
5. Unscrew the securing bolt remove the end plate, withdraw the spring and by-pass valve from the bolt.
6. Withdraw the strainer from the housing.
7. Clean the strainer, housing and end plate in suitable solvent.
8. Reassemble, ensuring that the components are correctly positioned, and always renew the seal for the suction pipe.
9. Tighten the securing bolt to 0,57 to 0,91 Nm (5,8 to 9,2 kgf cm, 5 to 8 lbf in).

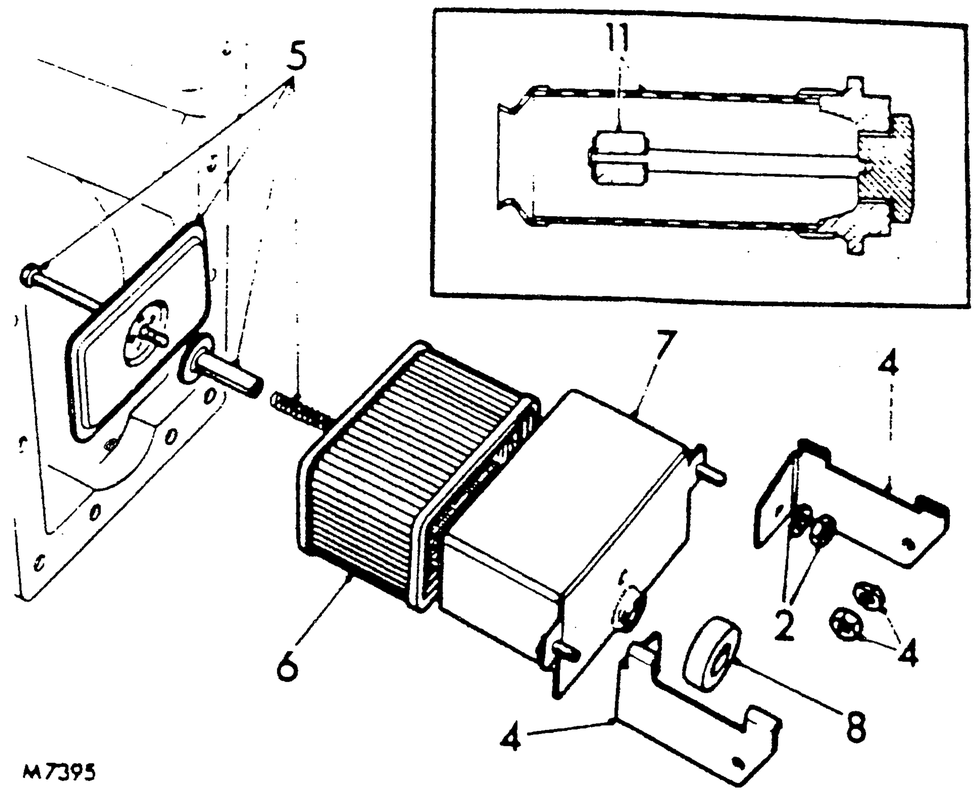

****Pump suction and magnetic filters—early models only****

10. Remove the combined filters assembly from the hydraulic power unit.
11. Remove the magnetic filter from the gauze filter.
12. Wash the magnetic and gauze filters in a suitable solvent.
13. Reassemble the magnetic filter into the gauze filter.
14. Replace the filters assembly into the hydraulic power unit.

https://tractormanualz.com/

ELECTRICAL

General testing

Check that the instruments, lamps, horn, indicators, windscreen wiper and windscreen washer are functioning correctly.

Headlamp beam alignment

Each headlamp may be swivelled on its mounting to adjust the direction of the light beam. Set the full beams slightly below horizontal and parallel to each other, or in accordance with local regulations.

Battery

The electrical system is of negative (–) earth polarity and it is essential that this is always maintained or damage to the alternator and other equipment may result.
Never disconnect the battery while the engine is running.
Always disconnect the battery negative (–) terminal first and re-connect it last.

Topping up electrolyte

NOTE: The procedure detailed below is for batteries with automatic filling systems. For batteries with individual vent plugs fitted to each cell, top up each cell to just above the plates.

1. Clean top of battery and remove vent chamber covers.
2. Check electrolyte level is up to the bottom of the filler tubes.
   CAUTION: DO not use a naked light when examining the cells as an explosive gas is produced by the battery.
3. Pour distilled water into the troughs until all the cells are full and the bottom of the trough is just covered.
   NOTE: Do not top-up if the level of the cells is above the bottom of the filler tubes or flooding could result.
   In cold conditions ensure the water is well above freezing point.
4. Press the covers into position to distribute the water to each cell.
5. In extremely cold conditions run the engine immediately after topping-up to mix the electrolyte and prevent freezing.

Preventative maintenance

6. Clean corrosion from battery and carrier using diluted ammonia and paint affected parts with anti-sulphuric paint.
7. Smear battery terminal points with petroleum jelly and ensure terminal screws are secure.

Use of voltmeter

The instrument marked 'BATTERY' is a voltmeter which may be used to determine the condition of the battery and the level of the charging voltage.

Battery condition check

8. Turn the starter key to the auxiliary position without the engine running and switch on the headlights.

   Interpretation of readings
   If the pointer is to the right of the white mark in the green sector the battery is correctly charged and in good condition.
   If the pointer is in the large red sector marked 'L' the battery requires attention; check the charging voltage, the specific gravity of each cell and charge the battery.

Charging voltage check

9. Run the engine above idling speed with all electrical equipment switched off.

   Interpretation of readings
   If the pointer is to the left of the white mark in the green sector the charging voltage is too low; this position may also be indicated when an item of electrical equipment is in use, when the fan belt is slipping or when a fault exists in the electrical system.
   Too high a charging voltage is indicated when the pointer is in the small red sector marked 'H'. If this reading continues for more than 10 minutes there is a fault in the alternator regulator.
   Ignore any readings when the engine is idling.

Checking specific gravity

If the voltmeter reading indicates that the battery requires attention a more accurate assessment of the condition of the battery can be made by taking specific gravity readings.

10. If the electrolyte level is low, top up and recharge the battery for at least 40 minutes. Do not overfill.
11. Take specific gravity readings from each cell in accordance with the hydrometer manufacturers instructions. Always return sample to correct cell.

continued

https://tractormanualz.com/

Hydrometer readings

NOTE: In climates frequently above 27° C (80° F) the concentration of acid in the electrolyte (and therefore the specific gravity) is reduced to offset the adverse affects of high temperature on battery life.

Climates below 27° C (80° F)

	Specific gravity	Degrees Baumé
Cell fully charge	1.27–1.29	30.5–32.5
Cell about half charged . . .	1.19–1.21	23.0–25.0
Cell completely discharged .	1.11–1.13	14.5–16.5

Climates frequently above 27° C (80° F)

	Specific gravity	Degrees Baumé
Cell fully charged	1.21–1.23	25.0–27.0
Cell about half charged . . .	1.13–1.15	16.5–19.0
Cell completely discharged .	1.05–1.07	7.0– 9.5

The figures given are for an electrolyte temperature of 16°C (60°F) and the reading obtained must be corrected to suit the actual temperature of the electrolyte.

For every 3° C (5° F) below 16° C (60° F) subtract 0.002 sp. gr. (0.2° B) from the hydrometer reading.

For every 3° C (5° F) above 16° C (60° F) add 0.002 sp. gr. (0.2° B) to the hydrometer reading.

12. All cells should give approximately the same reading. A cell which differs significantly from the rest, in its level or specific gravity may be damaged.

Charging the battery

Precautions

When charging the battery from an external source or when welding by electric arc on the tractor always disconnect the leads from the alternator and battery negative (–) terminal or damage to the alternator and other equipment will result.

Top up battery before charging but do not overfill. After extensive charging allow the battery to stand for half an hour before checking the electrolyte level. If required, top up and charge for a further hour.

Keep the vent chamber covers in place throughout charging and ensure that they permit the free escape of gases.

WARNING: The gas given off during charging is explosive; provide good ventilation and keep sources of ignition away from the battery.

Normal charging

The ideal charge current for the battery (Exide 352) is 13A and the battery should not be fully charged with a higher current.

Trickle charging

The battery should never be charged with a current of less than 3.25A.

Booster charging

This should always be considered an emergency method of charging and should never be used to fully charge a battery. Follow the charger manufacturers instructions carefully and never allow violent gassing or the battery temperature to exceed 52° C (125° F).

https://tractormanualz.com/

NOTES

https://tractormanualz.com/

LIST OF OPERATIONS – 245

Camshaft
- remove and refit TB12.13.01
- tappets – remove and refit TB12.13.06

Connecting rods and pistons
- big-end bearing – remove and refit TB12.17.16
- piston – remove and refit TB12.17.03
  gudgeon pin bush – additional work
- piston rings – remove and refit TB12.17.04
- remove and refit TB12.17.01
  cylinder liner – additional work

Crankshaft
- front oil seal – remove and refit TB12.21.14
- main bearings and thrust washers – remove and refit TB12.21.39
- rear oil seal – remove and refit TB12.21.20
- remove and refit TB12.21.33

Cylinder block – cylinder pressure check TB12.25.01

Cylinder head
- decarbonise and valve grind TB12.29.19
  valve guide – exhaust – additional work
  valve guide – inlet – additional work
- gasket – remove and refit TB12.29.11
- rocker shaft assembly – overhaul TB12.29.55
- rocker shaft assembly – remove and refit TB12.29.54
- valve clearances – check and adjust TB12.29.48

Engine assembly – remove and refit TB12.41.01

Engine – tune TB12.49.01

Flywheel – housing – remove and refit TB12.53.01
- spigot bearing – remove and refit TB12.53.20
- starter ring gear – remove and refit TB12.53.19

Lubrication system
- oil filter element – remove, clean and refit TB12.60.02
- oil pressure relief valve – main – remove and refit TB12.60.56
- oil pump – overhaul TB12.60.32
- oil pump – remove and refit TB12.60.26
- oil sump – remove, clean and refit TB12.60.44

Timing covers, gears, gear plates, chains, tensioners and guides
- timing gear case gasket – remove and refit TB12.65.25
- timing gear cover – remove and refit TB12.65.01
- timing gears – set – remove and refit TB12.65.20

https://tractormanualz.com/

CAMSHAFT

— Remove and refit TB12.13.01

Removing

1. Remove rocker shaft. TB12.29.54.
2. Remove fuel lift pump. TB19.45.09.
3. Remove timing cover. TB12.65.01.
4. Turn crankshaft until timing marks align.
5. Remove setscrews and detach camshaft gear, noting that the mark 'D' stamped on the gear aligns with the mark 'D' on the camshaft spigot.
6. Lift tappets and turn camshaft continually as it is withdrawn, taking care that the journals, cams or tappets are not damaged.

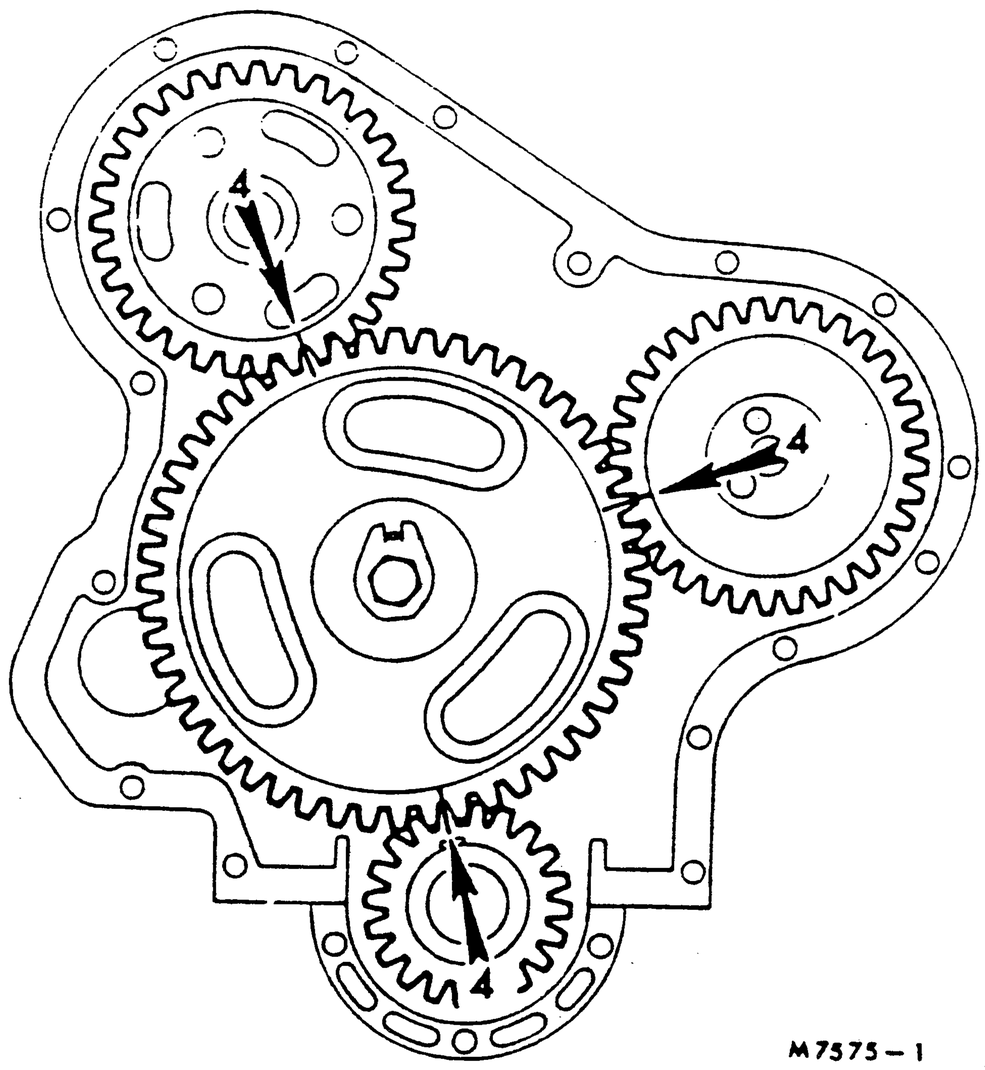

M7575—1

Refitting

7. Reverse procedure in 1 to 6, tightening the camshaft gear securing setscrews to the torque in DATA and aligning the timing marks when refitting the gear.

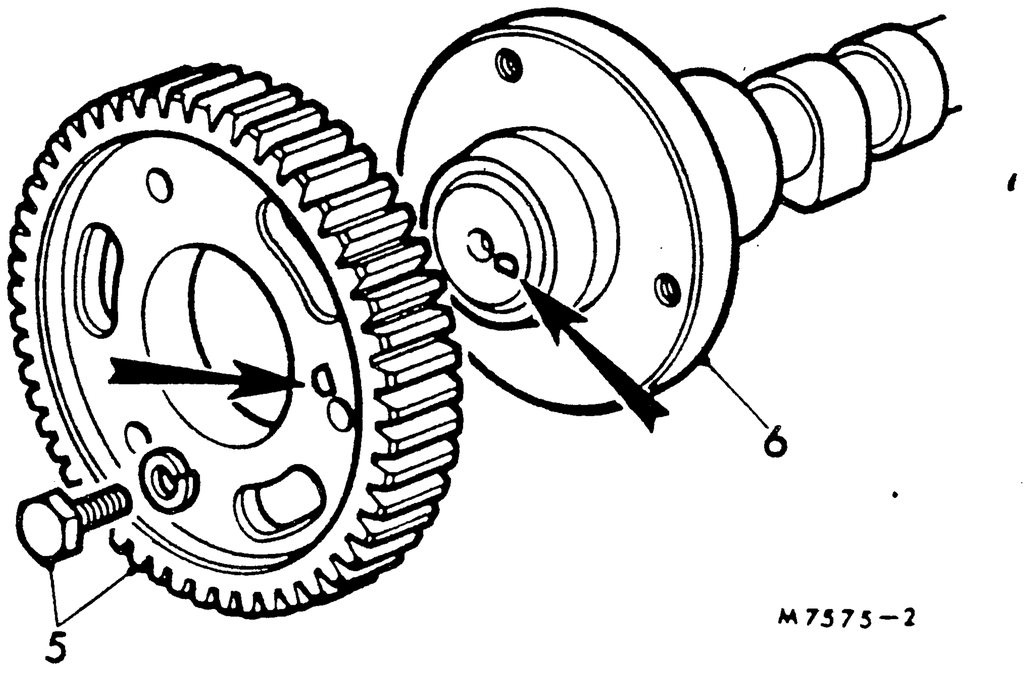

M7575—2

DATA

Camshaft

Journal diameters: No. 1	47,47 to 47,50 mm (1.869 to 1.870 in)
No. 2	47,22 to 47,24 mm (1.859 to 1.860 in)
No. 3	46,71 to 46,74 mm (1.839 to 1.840 in)
Running clearance of all journals	0,10 to 0,20 mm (0.004 to 0.008 in)
Cam lift	7,90 to 7,98 mm (0.311 to 0.314 in)

Torque tightening figures	**Nm**	**kgf m**	**lbf ft**
Camshaft gear retaining setscrews	28	2,9	21

https://tractormanualz.com/

TAPPETS TB12.13.06

— Remove and refit

Removing

1. Remove cylinder head. TB12.29.11.
2. Remove adjusting setscrews and withdraw tappets.

Refitting

3. Reverse procedure in 1 and 2.

DATA

Tappets

Diameter of shank	15,81 to 15,84 mm (0.62225 to 0.62375 in)
Clearance fit in cylinder head	0,02 to 0,09 mm (0.00075 to 0.0035 in)

CONNECTING RODS AND PISTONS

— Remove and refit TB12.17.01

Service tools: 18G 55 A (or 38 U3), PD 150 A, PD 150-1B

Removing

1. Remove cylinder head and gasket. TB12.29.11.
2. Remove sump. TB12.60.44.

NOTE: Before moving under engine, ensure that it is adequately supported.

3. Turn crankshaft until one of the connecting rods is at B.D.C., remove nuts securing big-end caps and detach caps and half bearings.
4. Push the connecting rod and piston assembly out through the top of the cylinder block.
5. Temporarily reassemble components in their original positions until they are refitted.
6. Repeat operations 3 to 5 for the other connecting rod and piston assemblies.

Inspection

7. Inspect liners for scoring, wear and renew as required. TB12.17.01/4.
   NOTE: The liners cannot be re-bored.

Cylinder liners — additional work TB12.17.01/04

NOTE: When an engine is being overhauled, remove the crankshaft and use a heavy duty press together with the adaptors PD 150-1B to remove and refit the liners.

8. Draw the liners out through the top of the cylinder block, using tools PD 150 A and PD 150-1B, ensuring no damage is done to the parent bores in the block.
9. Inspect parent bores in block and remove any burrs, corrosion or damage.
10. Remove any burrs or damage from outside diameter of the liners and ensure flanges fit freely in their counter-bores at the top of the parent bores.
11. Clean liners thoroughly and lubricate their outside diameters using a pressure can.
    NOTE: If the liners are cleaned using a solvent, ensure they are dried thoroughly before lubricating.
12. Draw the liners into the bores using tool PD 150A and PD 150-1B.
    NOTE: Extreme cleanliness and care is required when refitting the liners as any dirt or burrs between the parent bore and liners will cause distortion of the liner bore.
13. Check top face of each liner is below cylinder block top face by the amount stated in DATA.
14. Check liner bore diameters at the top, centre and bottom, both in line with the block and at right angles in each position. The acceptable limits are given in DATA.
    NOTE: It is advisable to allow a settling period after the liners are fitted before measuring the bores. New liners are pre-finished and do not require machining.

continued

https://tractormanualz.com/

Refitting

15. Clean components thoroughly and lubricate the cylinder bores and bearings with oil.
16. Refit the piston and connecting rod assemblies, noting:
    a. Use tool 18G 55 A (or 38 U3) to compress the piston rings.
    b. Ensure that the numbers stamped on the connecting rods and big-end bearing caps are toward the injection pump side of the engine and also ensure that the word 'FRONT' stamped on each piston crown is toward the front of the engine.
    c. Use new nuts on the big-end cap bolts and tighten to torque in DATA.
    d. After refitting the assemblies rotate the crankshaft by hand and check that all parts move freely.
17. Check that the height of each piston to the cylinder block top face is correct, see DATA, with the piston at T.D.C.
    NOTE: New pistons may require to be removed and their heads skimmed to bring them to the correct height.
18. Refit sump. TB12.60.44.
19. Refit cylinder head. TB12.29.11.

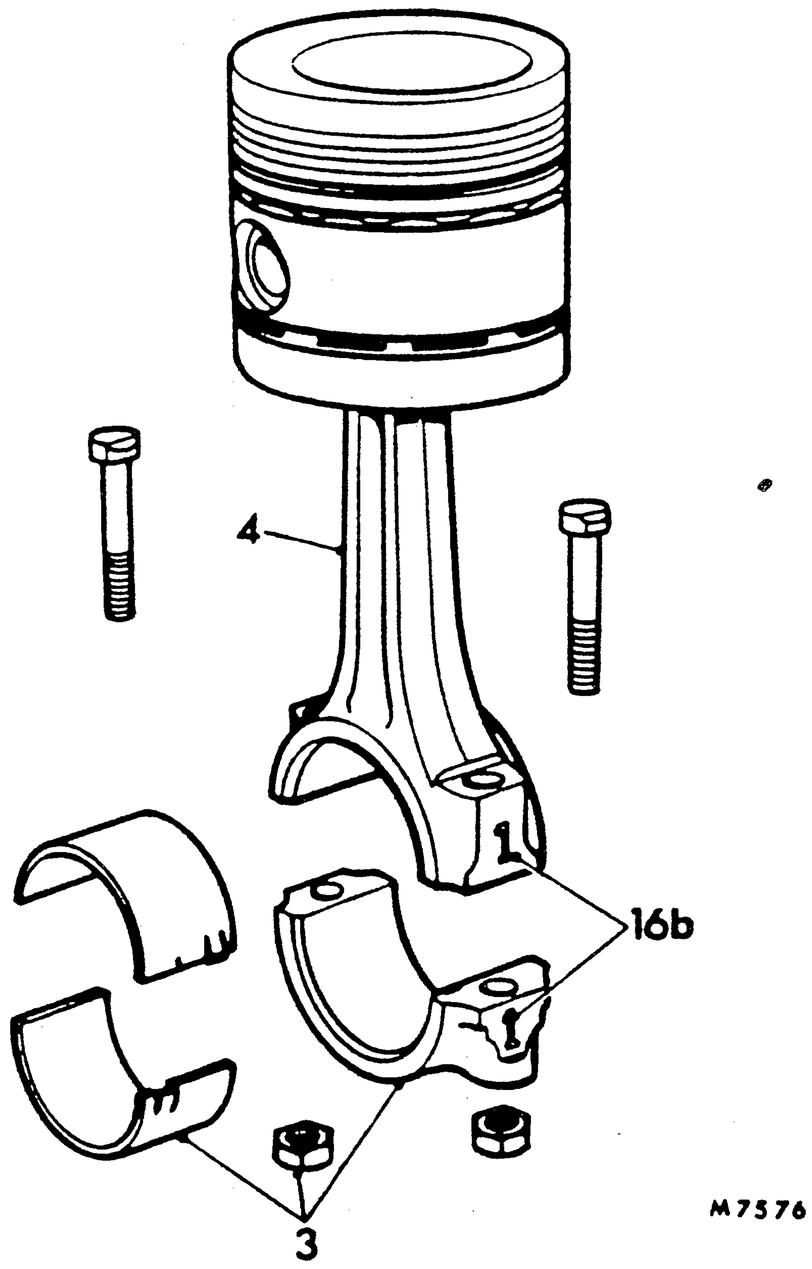

M7576

DATA

Pistons and connecting rods	
Height of piston crown at T.D.C.	0,10 mm (0.004 in) above to 0,03 mm (0.001 in) below top face of cylinder block
Cylinder liners	
Outside diameter of service liner	93,66 to 93,69 mm (3.6875 to 3.6885 in)
Fit of service liner in block	0,03 mm (0.001 in) clearance to 0,03 mm (0.001 in) interference
Inside diameter of liner when fitted	91,48 to 91,50 mm (3.6015 to 3.6025 in)
Outside diameter of flange	96,60 to 96,72 mm (3.803 to 3.808 in)
Flange thickness	3,76 to 3,81 mm (0.148 to 0.150 in)
Depth of liner flange below top face of cylinder block	0,00 to 0,10 mm (0,00 to 0,004 in)

Torque tightening figures	**Nm**	**kgf m**	**lbf ft**
Big-end cap nuts: Plain	95	9,7	70
Cadmium plated	61	6,2	45

https://tractormanualz.com/

PISTONS AND CONNECTING RODS

— Renew pistons TB12.17.03

— Renew piston rings TB12.17.04

Dismantling

1. Remove connecting rod and piston assemblies. TB12.17.01.
2. Remove and discard piston rings, noting their relative positions.

NOTE: If possible, immerse piston and connecting rod assemblies in a suitable cleanser/oil emulsifier for a few hours while carrying out other work.

3. Remove circlips retaining gudgeon pins.
4. Immerse pistons in hot water and allow to warm.
5. Remove assembly from water, clamp connecting rod in vice and tap out the gudgeon pins to release the pistons.
   NOTE: Maintain the pistons with the connecting rods from which they were removed.
6. Clean and decarbonise components, ensuring oil holes and piston ring grooves are clear.

Inspection

7. Check fit of gudgeon pin in piston and small end bush, see DATA; ensure bush is not loose in connecting rod and that the oil holes align. Renew parts as required.
8. Check connecting rod alignment, see DATA.
9. Check width of piston ring grooves, see DATA, and examine the piston for wear and damage.

Gudgeon pin bush — additional work TB12.17.03/01

10. Press worn bush from the connecting rod.
11. Remove sharp edges from connecting rod bore.
12. Press in a new bush using a suitable mandrel, ensuring that the oil holes in the bush and connecting rod align.
13. Ream the bush bore to the dimension in DATA.
14. Check alignment of connecting rod, see DATA.

Reassembling

15. Immerse piston in hot water and allow to warm.
16. Grip connecting rod in vice.
17. Remove piston from water, wipe dry, lubricate with engine oil, position on connecting rod and fit gudgeon pin and circlips, noting:
    a. Ensure that the offset cavity in the piston crown is toward the side of the connecting rod which is marked with the identification number.

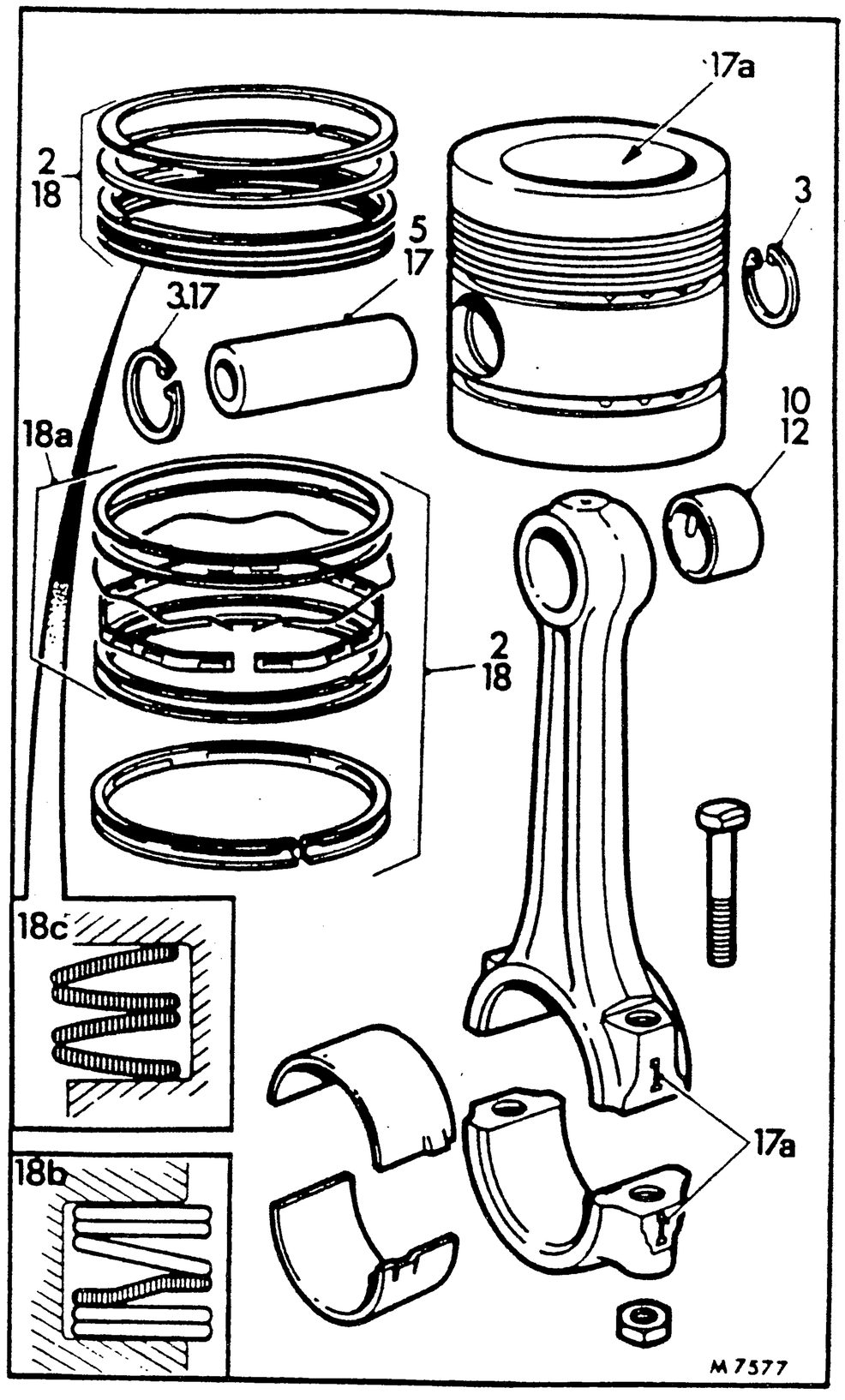

18. Fit new piston rings to piston in positions stated in DATA, noting:
    a. When fitting the spring loaded scraper ring of the type incorporating an internal expander to the fourth groove first fit the internal expander, then the lower two rail rings, then the spiral ring and finally the upper two rail rings. The rail ring gaps should be equally spaced around the piston.
    b. An alternative type of spring loaded scraper ring may be supplied for fitting to the fourth groove which consists of four flat segments, one cupped segment and one spacer. Fit the lower two segments first, then the spacer, then the cupped segment with the cupped face downward and finally the upper two flat segments. The segment gaps should be equally spaced around the piston.
    c. Fit the four segments of the laminated compression ring to the third groove as two pairs with their dished sides toward each other as shown. The gaps of adjacent segments should be at 180° to each other with all the gaps above the ends of the gudgeon pin bore.
19. Refit piston and connecting rod assemblies. TB12.17.01.

continued

https://tractormanualz.com/

DATA

Pistons

Bore diameter for gudgeon pin	31,744 to 31,750 mm (1.24975 to 1.25000 in)
Top and 2nd ring groove width	2,43 to 2,46 mm (0.0957 to 0.0967 in)
3rd ring groove width	3,23 to 3,25 mm (0.127 to 0.128 in)
4th and 5th ring groove width	6,40 to 6,43 mm (0.252 to 0.253 in)

Piston rings

Position	Type	Clearance in groove		Gap in bore	
		mm	in	mm	in
Top compression	Chrome plated	0,05 to 0,10	0.0019 to 0.0039	0,36 to 0,48	0.014 to 0.019
2nd compression	Plain, parallel faced	0,05 to 0,10	0.0019 to 0.0039	0,28 to 0,41	0.011 to 0.016
3rd compression	Four segment laminated	–	–	–	–
4th oil control	Spring loaded, laminated scraper	–	–	–	–
5th oil control	Slotted scraper	0,05 to 0,10	0.002 to 0.004	0,28 to 0,41	0.011 to 0.016

NOTE: The ring gaps quoted above are for a bore diameter of 91,48 mm (3.6015 in). When checking the gaps in a worn bore add 0,08 mm (0.003 in) for every 0,03 mm (0.001 in) increase in bore diameter.

Gudgeon pins

Outside diameter	31,744 to 31,750 mm (1.24975 to 1.25000 in)
Fit in piston	0,056 mm (0.00025 in) clearance to 0,056 mm (0.00025 in) interference
Clearance fit in small end bush	0,01 to 0,04 mm (0.0005 to 0.00175 in)

Small end bushes

Type	Steel-backed, lead-bronze lined
Outside diameter	35,01 to 35,05 mm (1.3785 to 1.3800 in)
Length	26,62 to 26,87 mm (1.048 to 1.058 in)
Bore diameter after reaming	31,76 to 31,79 mm (1.2505 to 1.2515 in)

Connecting rods

Small end parent bore diameter	34,92 to 34,96 mm (1.37475 to 1.37620 in)
Length between bore centres	223,80 to 223,85 mm (8.811 to 8.813 in)
Maximum out of parallel of big and small end bores	0,1 mm per 100 mm (0.001 in per inch) over mandrel length, with bushes not fitted. With small end bush fitted limit is reduced to 0,025 mm per 100 mm (0.00025 in per inch) over mandrel length

https://tractormanualz.com/

CONNECTING ROD BIG-END BEARINGS

— Remove and refit **TB12.17.16**

Removing

1. Remove sump. TB12.60.44.

NOTE: Before moving under the engine to carry out further work ensure that it is adequately supported.

2. Turn crankshaft until connecting rod is at B.D.C.
3. Check identification marks on connecting rod and cap.
4. Remove nuts, cap and lower bearing shell.
5. Push connecting rod upward into bore and remove upper bearing shell.
6. Repeat operations 2 to 5 for remaining bearings.

Refitting

7. Clean connecting rod, cap, crankpin and bearing halves.
8. Reverse procedure in 1 to 6, noting:
   a. Lubricate the bearing halves and journals with engine oil.
   b. Ensure that the bearing locating tongues are correctly positioned and that no dirt is trapped behind the bearings or between the cap to connecting rod faces.
   c. Use new big-end nuts and tighten them to the torque figures in DATA.
   d. Check that the big-end bearings have end-float on the crankpins, and rotate the crankshaft by hand to check that all parts move freely.

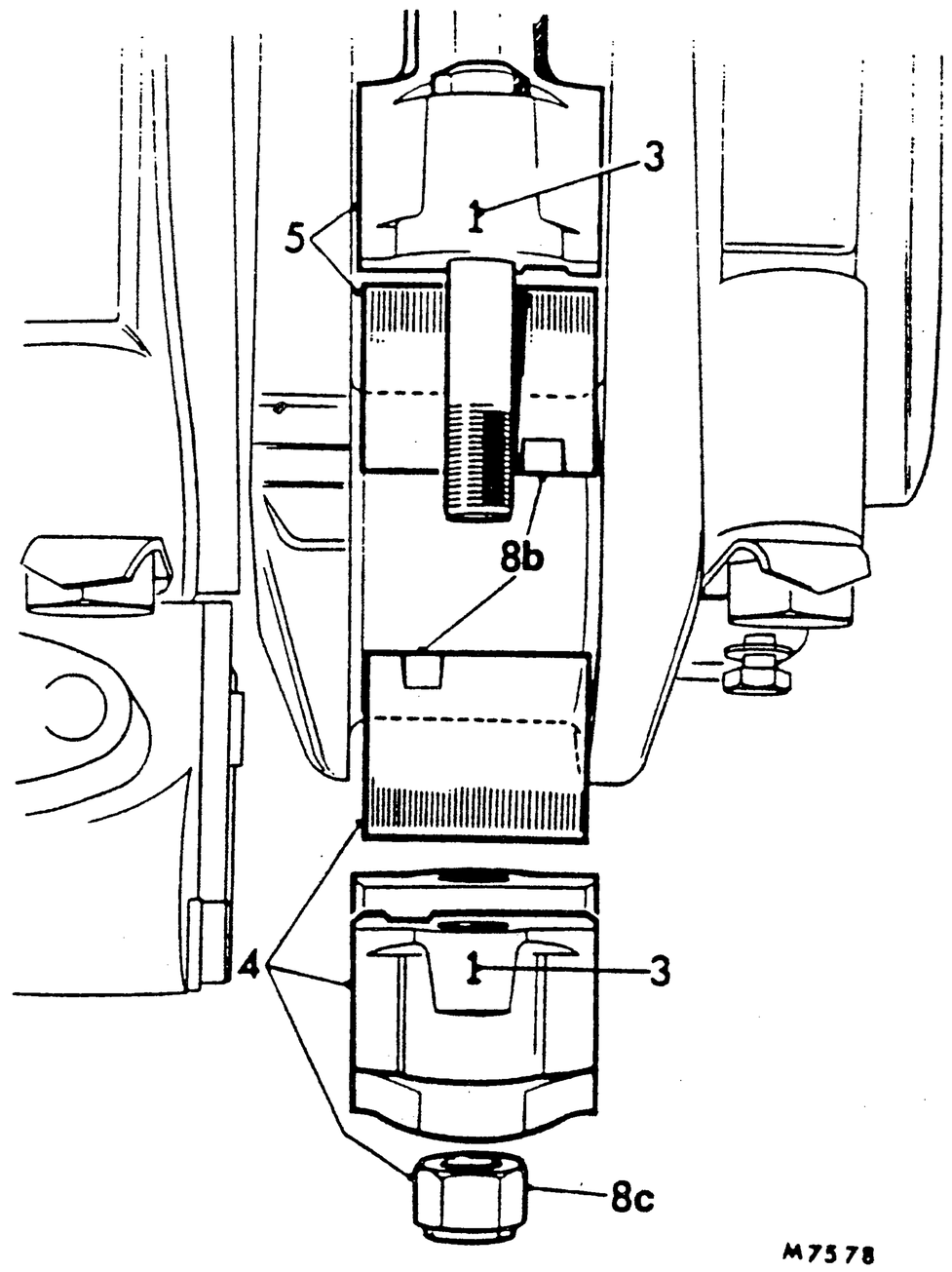

M7578

DATA

Torque tightening figures	Nm	kgf m	lbf ft
Big-end cap nuts: Plain	95	9,7	70
Cadmium plated	61	6,2	45

https://tractormanualz.com/

CRANKSHAFT FRONT OIL SEAL

— Remove and refit TB12.21.14

Service tools: 18G 1111, 18G 1230

Removing

1. Remove the fan blades.
2. Remove fan belt. TB26.20.10.
3. Remove setscrew and washer and withdraw crankshaft pulley.
4. Extract the oil seal using tool 18G 1111.

Refitting

5. Fit a new seal using tool 18G 1230, together with the crankshaft pulley and setscrew to press in the seal to its correct position.
6. Remove crankshaft pulley and extract tool 18G 1230.
7. Refit pulley and tighten retaining setscrew to torque in DATA.
8. Refit and tension fan belt. TB26.20.10.
9. Refit fan blades.

DATA

Torque tightening figures	Nm	kgf m	lbf ft
Crankshaft pulley retaining setscrew	149	15,2	110

CRANKSHAFT REAR OIL SEAL

— Remove and refit TB12.21.20

Service tool: PD 145

Removing

1. Remove clutch. TB33.10.01.
2. Bend back tabs to release flywheel setscrews.
3. Remove flywheel setscrews and locking plates.
4. Withdraw flywheel from crankshaft.
5. Remove setscrews and withdraw oil seal housing from dowels and crankshaft flange.
6. Remove oil seal from housing.
7. Clean joint faces and crankshaft flange.

continued

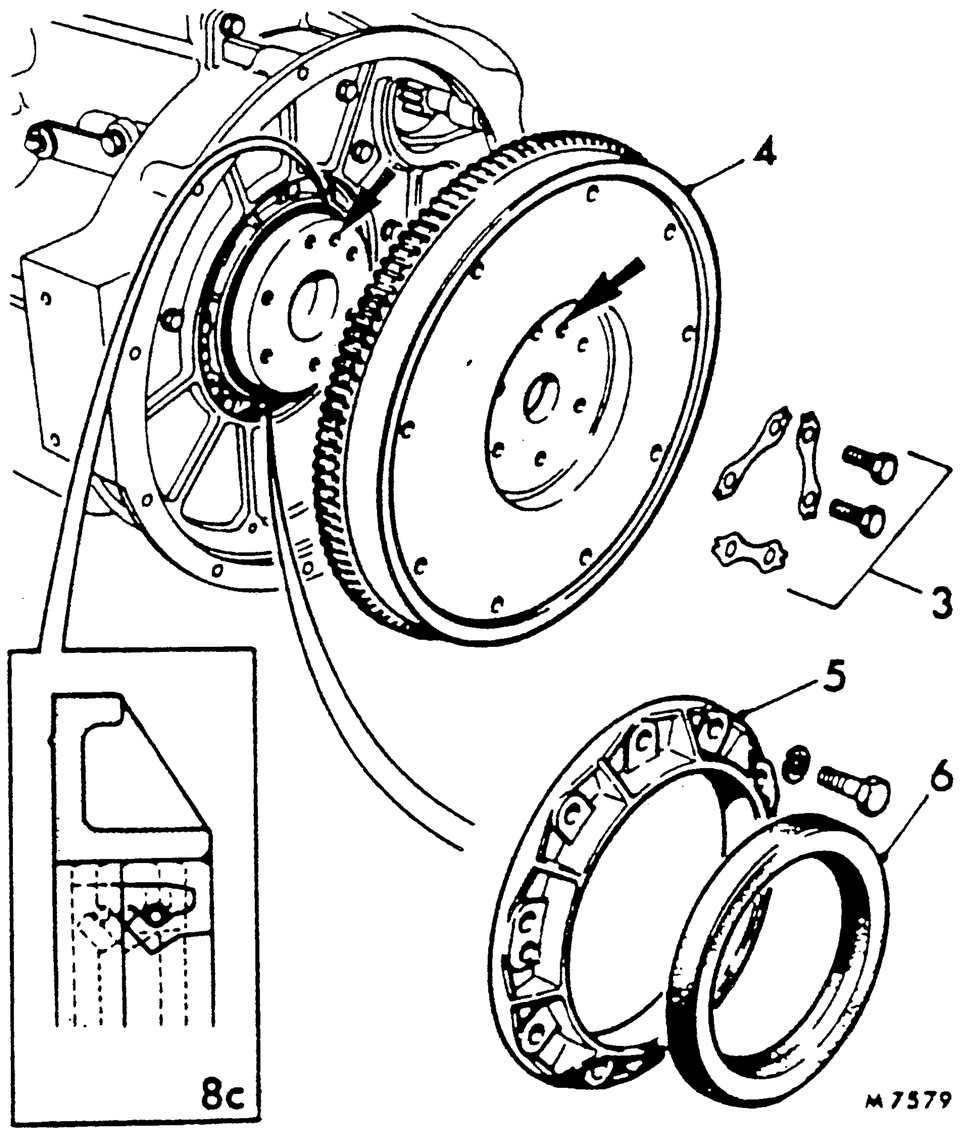

Refitting

8. Press the new seal into the housing, noting:
   a. The seal is easily damaged; any visual damage across the lip of the seal will cause leaks and prevent bedding-in of the new seal.
   b. Lubricate outside diameter of seal and bore of housing with engine oil and ensure seal is kept square with the housing as it is pressed in.
   c. In production the seal is fitted flush with the rear face of the housing and this position should also be used with a new or reconditioned crankshaft. In service when a new seal is fitted to a worn crankshaft it should be pressed further into the housing, in the first instance to 3,2 mm (0.125 in) or, if this position has been used, to 6,4 mm (0.25 in).
   NOTE: If all three positions have been used, remove the crankshaft and machine the flange, see TB12.21.33.
9. Refit the housing and seal assembly, noting:
   a. Use a new gasket, coat both faces with sealing compound, see DATA, and position it over the two dowels in the block.
   b. Use seal guide, tool PD 145, to fit the assembly. Lubricate the guide, seal and crankshaft flange with engine oil, position seal and housing on guide, locate guide on crankshaft flange and gently press seal and housing into position on the flange, locating the housing on its dowels. Withdraw guide and secure housing using setscrews and washers.
10. Refit flywheel, aligning unused holes in flywheel and crankshaft flange, tighten setscrews to torque in DATA and lock with tabs.
11. Refit clutch. TB33.10.01.

DATA

Torque tightening figures	**Nm**	**kgf m**	**lbf ft**
Flywheel setscrews	108	11	80

Special lubricants and compounds

Crankshaft rear oil seal housing sealing compound . . . Hylomar

https://tractormanualz.com/

CRANKSHAFT

– Remove and refit TB12.21.33

Removing

1. Remove engine. TB12.41.01.
2. Remove clutch. TB33.10.01.
3. Remove flywheel and flywheel housing. TB12.53.01.
4. Remove crankshaft rear oil seal. TB12.21.20.
5. Remove timing gear cover. TB12.65.01.
6. Turn engine until timing marks on crankshaft gear, injection pump gear and camshaft gear are toward the idler gear, noting that the idler gear timing marks may be in any position.
7. Remove rocker shaft. TB12.29.54.
8. Remove timing idler gear. TB12.65.20.
9. Invert engine and place on suitable supports.
10. Remove sump. TB12.60.44.
11. Remove oil pump. TB12.60.26.

NOTE: If any bearings are to be re-used, ensure that they are marked as they are removed to enable them to be replaced in their original positions.

12. Remove bolts, connecting rod caps and big-end bearing shells.
13. Remove setscrews, main bearing caps and lower halves of bearing shells and thrust washers.
14. Lift out crankshaft and upper halves of main bearing shells and thrust washers.
15. If required, remove the gear and spacer from the crankshaft.

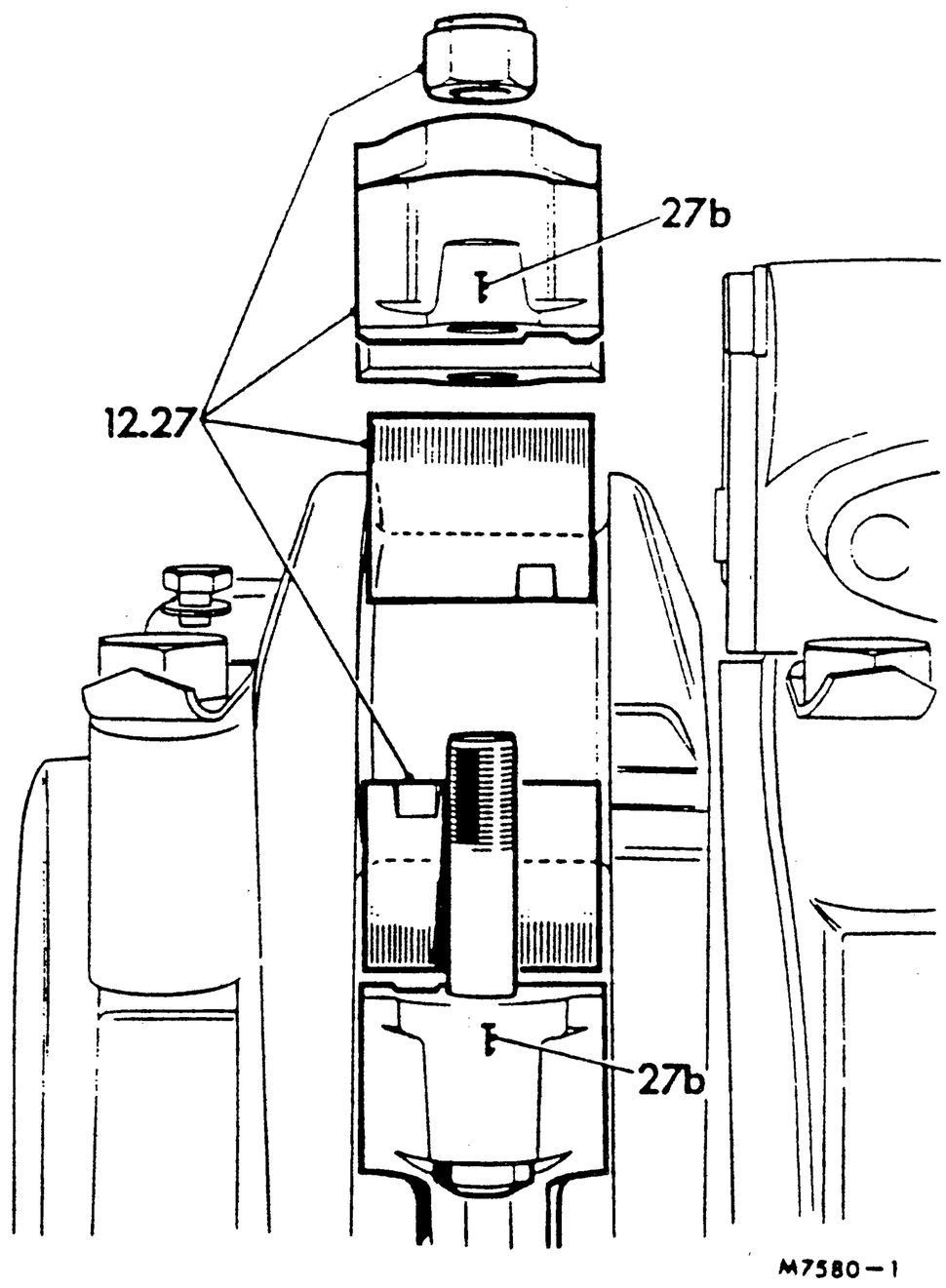

M7580–1

Inspection

16. Inspect balance weights and replace as required, noting that they should be replaced as a pair and that variation in individual weights must not exceed the figure in DATA. Tighten setscrews to torque in DATA.
17. Crack-detect the crankshaft to ensure that it is suitable for further use, then demagnetise it to remove any polarisation.

continued

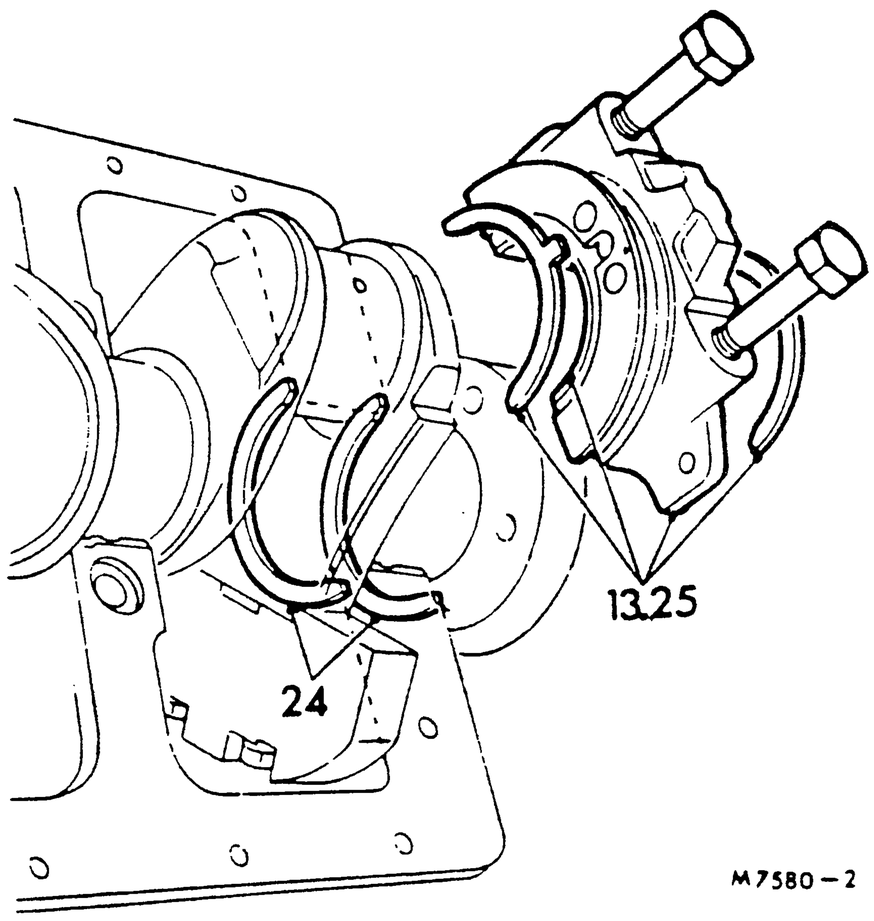

M7580–2

https://tractormanualz.com/

18. Check the main journal and crankpin diameters to determine the next appropriate sizes to which the crankshaft may be ground, see DATA, and inspect the crankshaft rear oil seal sealing surface for wear. Re-grind to the tolerances in DATA as required, noting:
    a. The time for grinding and other associated work is not included in this operation.
    b. During re-grinding, all the limits, including those for the radii of the main journals and crankpins, must be strictly adhered to and the ground faces must be free of grinding marks.
    c. Remove the minimum amount of metal from the flywheel flange to clean up the oil seal grooves up to the minimum diameter stated in DATA. Ensure that this diameter is protected when refitting as the slightest damage will prevent the oil seal from functioning correctly.
    d. After re-grinding, the sharp corners on the oil holes should be removed and the crankshaft should be crack-detected again, then demagnetised.
19. Check main bearing setscrews for stretch or damage to threads, replacing them as required by the correct service parts.

Refitting

20. Thoroughly degrease and clean the crankshaft, ensuring that the oilways are clear and the bearing and sealing surfaces are polished.
21. Refit spacer and crankshaft gear, if removed, noting that the chamfered side of the spacer must face rearward and the timing mark on the gear must face forward.
22. Clean main bearing housings thoroughly, lubricate with engine oil and place top halves of bearing shells in position.
23. Position crankshaft.
24. Lightly smear the two upper thrust washer halves with oil and slide them into their recesses at either side of the rear main bearing housing with their steel faces toward the housing.
25. Clean and refit main bearing caps, bearing shells and thrust washer lower halves, noting:
    a. Ensure thrust washers are fitted with their steel faces toward the housing.
    b. Renew the rear main bearing cap O-ring seals.
    c. Lightly coat the rear main bearing cap butt faces (shaded area) with jointing compound, see DATA, ensuring that the grooves in the faces are maintained clean.
    d. Fit main caps in their numbered order and ensure that all the stamped numbers are the same way up.
    e. Tighten setscrews to torque in DATA.
26. Check the crankshaft end-float is within the tolerance in DATA using a dial gauge and that the crankshaft rotates freely. Renew the thrust washers if end-float exceeds the maximum stated in DATA.
27. Clean, lubricate and fit big-end bearing shells and caps, noting:
    a. Ensure that re-used bearings are fitted in their original positions.
    b. Ensure that numbers stamped on connecting rods and caps are toward injection pump side of engine.
    c. Use new nuts on the bolts and tighten to torque in DATA.
    d. Rotate crankshaft after tightening bolts to check that all parts move freely.
28. Refit oil pump. TB12.60.26.
29. Refit sump. TB12.60.44.
30. Invert engine and place on suitable supports.
31. Refit timing idler gear. TB12.65.20.
32. Refit rocker shaft and cover. TB12.29.54.
33. Refit timing gear cover and crankshaft pulley. TB12.65.01.
34. Refit crankshaft rear oil seal. TB12.21.20.
35. Refit flywheel housing and flywheel. TB12.53.01.
36. Refit clutch. TB33.10.01.
37. Refit engine. TB12.41.01.

continued

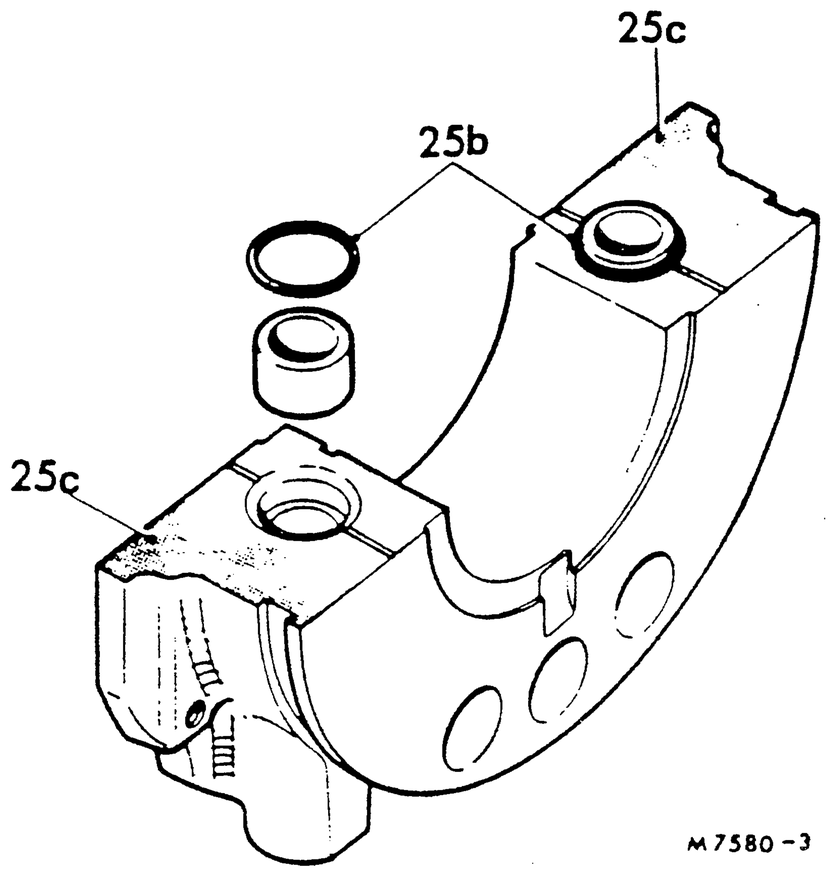

https://tractormanualz.com/

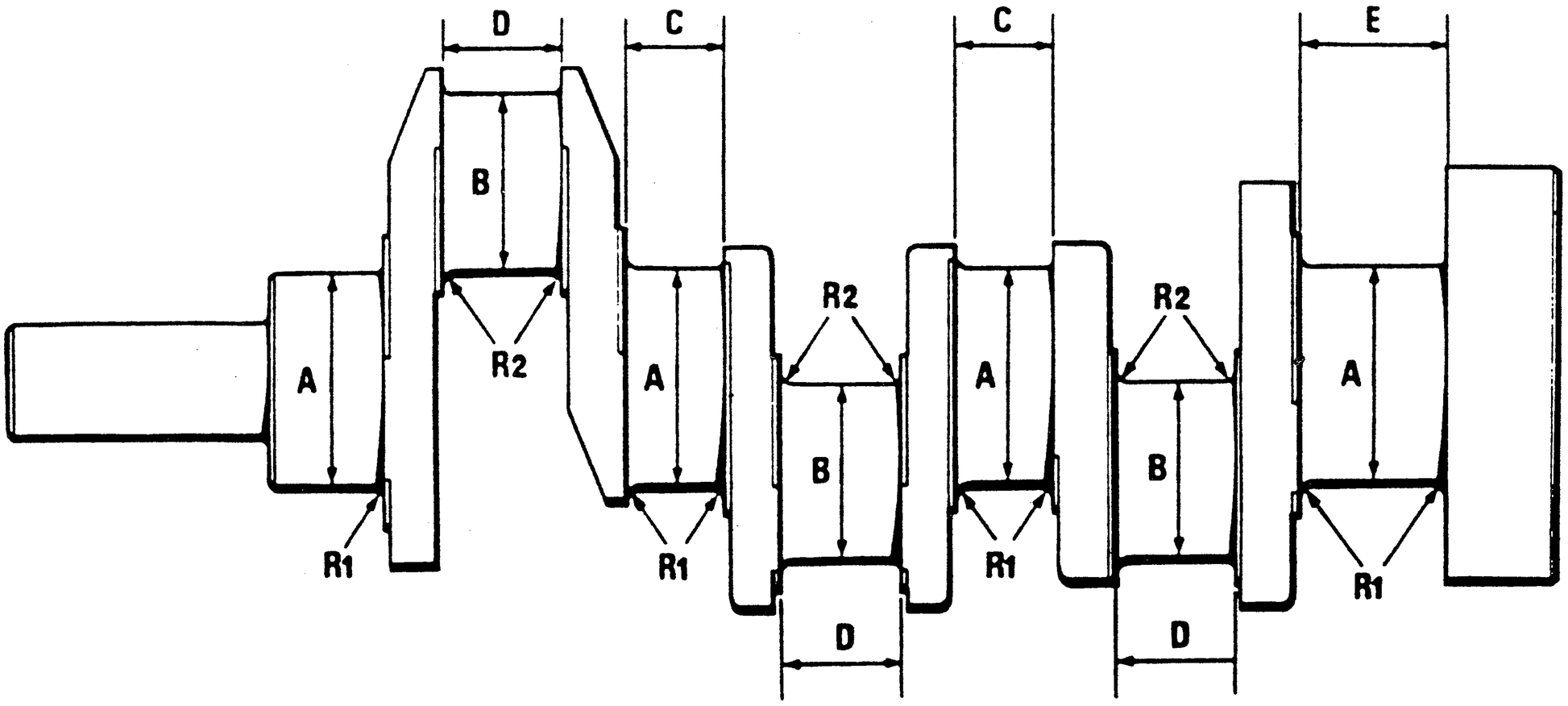

M7580 – 4

DATA

Crankshaft

	NEW	1st Undersize 0,25 mm (0.010 in)	2nd Undersize 0,51 mm (0.020 in)	3rd Undersize 0,76 mm (0.030 in)
A	69,81 to 69,82 mm 2.7485 to 2.7490 in	69,56 to 69,57 mm 2.7385 to 2.7390 in	69,30 to 69,32 mm 2.7285 to 2.7290 in	68,80 to 68,81 mm 2.7185 to 2.7190 in
B	57,11 to 57,12 mm 2.2485 to 2.2495 in	56,86 to 56,87 mm 2.2385 to 2.2390 in	56,60 to 56,62 mm 2.2285 to 2.2290 in	56,35 to 56,36 mm 2.2185 to 2.2190 in

C Main journal length—Nos. 2 and 3	31,184 mm (1.2277 in) maximum
D Crankpin length	39,88 mm (1.570 in) maximum
E Main journal length—No. 4	47,27 mm (1.861 in) maximum
R1 Main journal fillet radii—All	2,38 to 2,78 mm (0.0937 to 0.1093 in)
R2 Crankpin fillet radii—All	3,97 to 4,36 mm (0.1562 to 0.1718 in)
Surface finish of crankpins, journals, fillet radii and rear oil seal diameter	0,4 to 0,2 microns (16 to 8 micro-inches) C.L.A.
S Rear oil seal sealing diameter	133,17 mm (5.243 in) minimum
T Length of flange left unground	5 mm (0.2 in)
Crankshaft end-float	0,05 to 0,38 mm (0.002 to 0.015 in)
Thrust washer thickness—standard	3,07 to 3,12 mm (0.121 to 0.123 in)
Thrust washer thickness—oversize	3,26 to 3,31 mm (0.1285 to 0.1305 in)
Main bearing running clearance	0,08 to 0,13 mm (0.003 to 0.005 in)
Big-end bearing running clearance	0,06 to 0,10 mm (0.0025 to 0.004 in)
Variation between individual weights	28 g (1 oz) maximum

Torque tightening figures	**Nm**	**kgf m**	**lbf ft**
Balance weight setscrews	75	7,6	55
Connecting rod nuts: Cadmium plated	61	6,2	45
Plain	95	9,7	70
Main bearing setscrews	157	16	115

Special lubricants and compounds

Jointing compound	Hylomar

continued

https://tractormanualz.com/

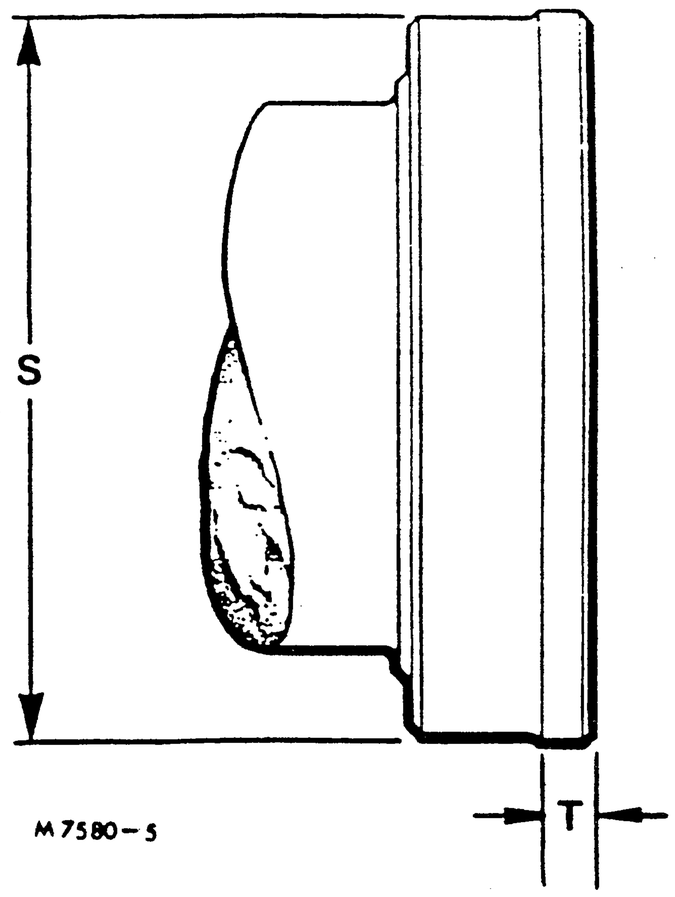

MAIN BEARINGS AND THRUST WASHERS

— Remove and refit **TB12.21.39**

Removing

1. Remove engine. TB12.41.01.
2. Remove clutch. TB33.10.01.
3. Remove flywheel and flywheel housing. TB12.53.01.
4. Remove crankshaft rear oil seal. TB12.21.20.
5. Invert engine and place on suitable supports.
6. Remove sump. TB12.60.44.
7. Remove oil pump. TB12.60.26.
8. Slacken main bearing setscrews.
9. Remove No. 4 (rear) main bearing cap, lower bearing shells and thrust washer lower halves; discard the O-ring seals.
10. Remove thrust washer and bearing shell upper halves by pushing them round the crankshaft, noting that the upper shell may only be removed one way because of the locating tongue; inspect components and refit cap as detailed below before removing others.
11. Remove remaining bearing caps one at a time and remove the upper bearing shells by the same method as for No. 4 bearing.

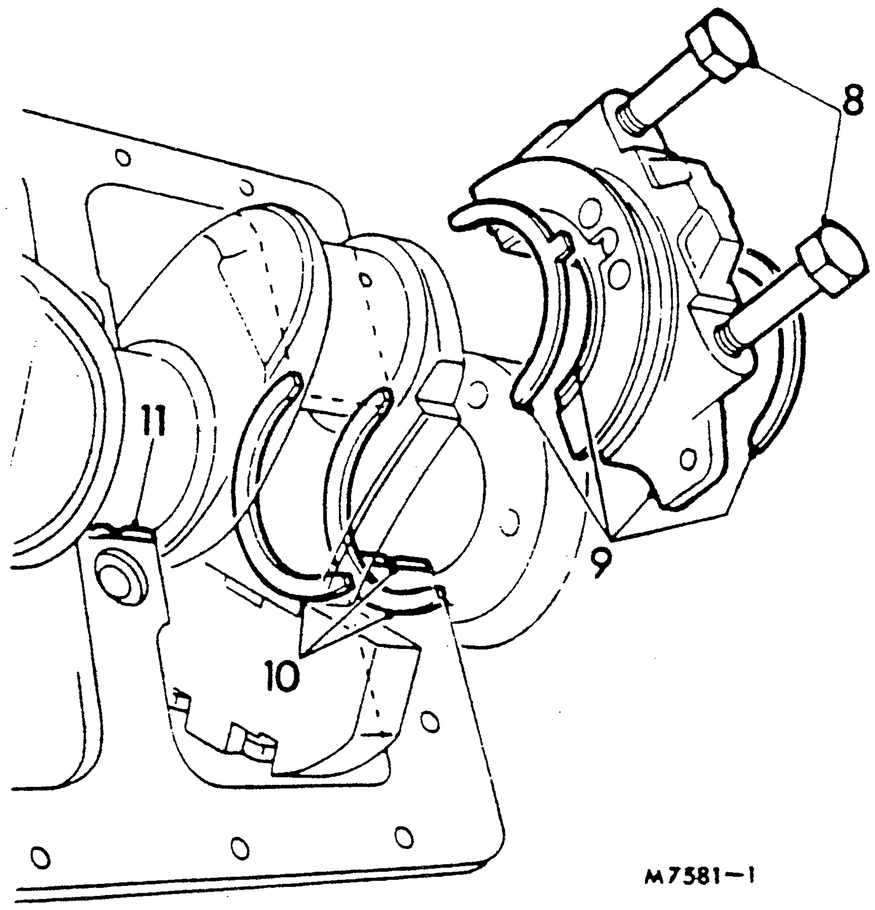

Inspection

12. Inspect main bearing journals to ensure that they are suitable for further service, and check their diameters to ensure that the correct size of bearing shells are to be fitted.
13. Inspect main bearing setscrews for stretch and damage to threads, replacing them as required by the correct service parts.

continued

https://tractormanualz.com/

Refitting

NOTE: Clean and lubricate bearing shells before fitting, ensuring that their locating tongues are correctly positioned and that no dirt is trapped behind the shells or between the mating faces of the caps and cylinder block.

14. Refit No. 4 bearing shells, thrust washers and caps, noting:
    a. Fit the thrust washers with their steel faces toward the housing.
    b. Fit new O-ring seals between the cap and crankcase.
    c. Lightly coat the rear main bearing cap butt faces (shaded area) with jointing compound, see DATA, ensuring that the grooves in the faces are maintained clear.
15. Refit each bearing cap before removing others, but do not tighten the setscrews.
16. Tighten setscrews of all caps to the torque in DATA.
17. Check crankshaft end-float is within tolerance in DATA, using a dial gauge, and that the crankshaft rotates freely. Renew thrust washers if end-float exceeds the maximum stated in DATA.
18. Refit oil pump. TB12.60.26.
19. Refit sump. TB12.60.44.
20. Invert engine and place on suitable supports.
21. Refit crankshaft rear oil seal. TB12.21.20.
22. Refit flywheel housing and flywheel. TB12.53.01.
23. Refit clutch. TB33.10.01.
24. Refit engine. TB12.41.01.

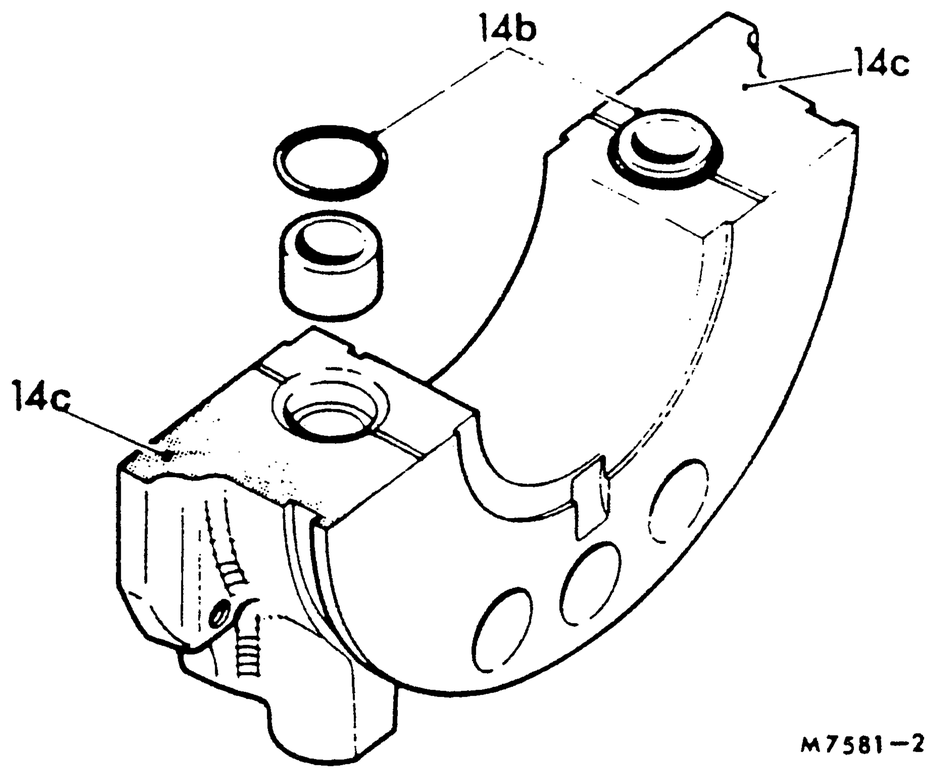

DATA — see DATA of previous operation. TB12.21.33.

CYLINDER PRESSURES

— Check **TB12.25.01**

Service tool: Suitable proprietary cylinder pressure tester

1. Run engine to normal working temperature.
2. Remove injectors. TB19.60.01.
3. Assemble test equipment and fit to injector bore (see manufacturer's instructions).
4. Pull stop control fully out and crank engine. Note reading on gauge.
5. Repeat operations 3 and 4 for other cylinders.
6. Dismantle test equipment.
7. Refit injectors. TB19.60.01.

https://tractormanualz.com/

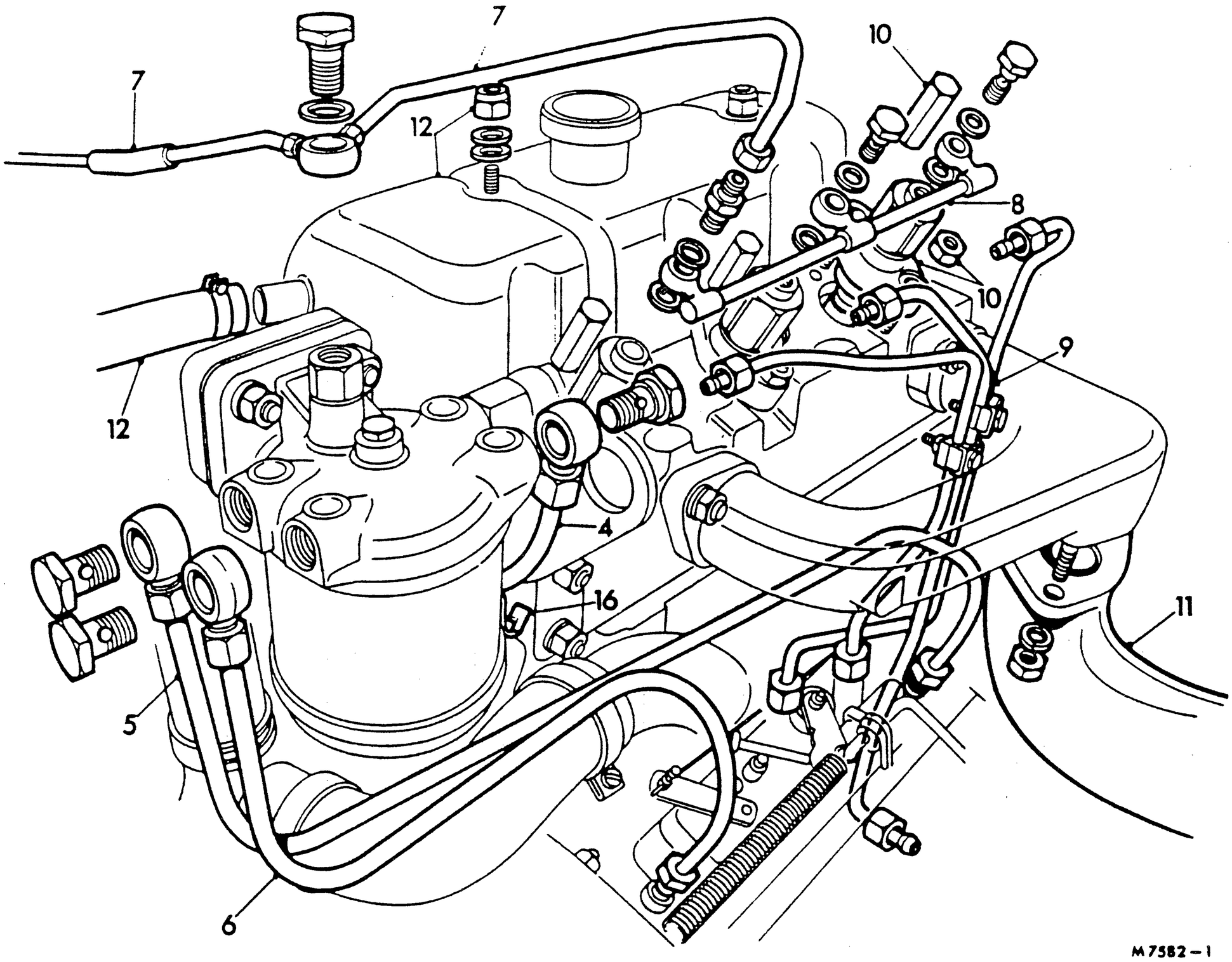

M7582–1

CYLINDER HEAD GASKET

— Remove and refit **TB12.29.11**

Removing

NOTE: Protect all parts of the fuel system against the ingress of dirt by fitting cap or plugs to the unions as they are disconnected.

1. Remove front side panels, disconnect earth lead from battery negative (–) terminal and close the fuel tap.
2. Drain cooling system.
3. Remove bonnet.
4. Remove pipe — lift pump to fuel filter.
5. Remove feed pipe — fuel filter to injection pump.
6. Remove return pipe — injection pump to fuel filter.
7. Remove leak-off pipe — No. 1 injector to filter — and disconnect fuel return pipe.
8. Remove leak-off pipe from injectors.
9. Remove high pressure pipes — injection pump to injectors.
10. Remove nuts and withdraw injectors.
11. Remove exhaust silencer and elbow from manifold.
12. Disconnect breather hose from rocker cover, remove the two securing nuts and detach rocker cover.

continued

https://tractormanualz.com/

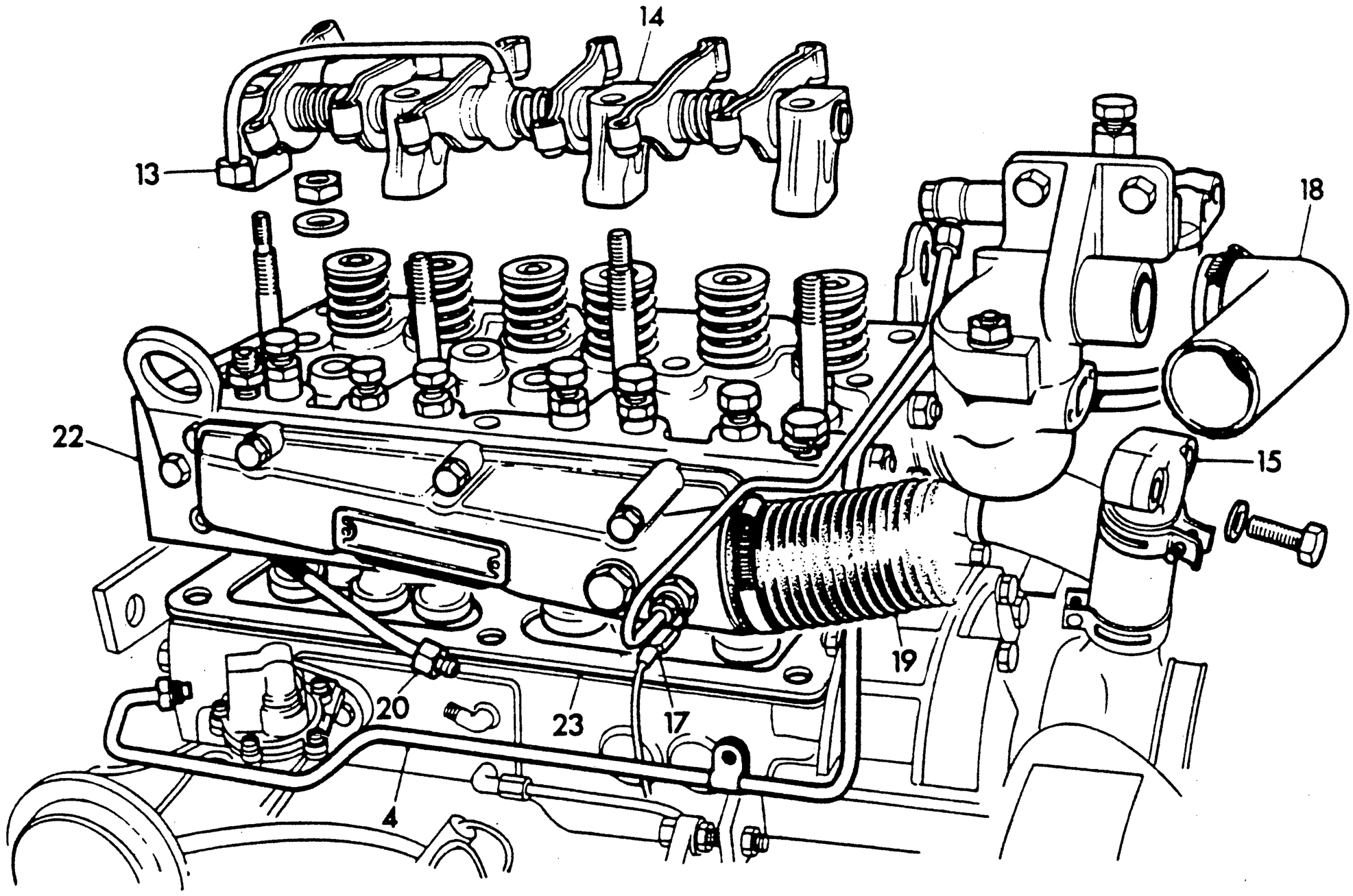

M7582–2

13. Disconnect rocker shaft oil feed pipe from cylinder head.
14. Remove nuts and washers and lift off rocker shaft.
15. Remove screws and detach by-pass hose elbow (early models) or detach by-pass hose (later models), from thermostat housing.
16. Disconnect wire from temperature transmitter in thermostat housing.
17. Disconnect wire from thermostart unit in induction manifold.
18. Remove radiator top hose.
19. Release clip and detach induction hose from manifold.
20. Disconnect oil feed pipe between block and cylinder head.
21. Remove bolts and nuts securing cylinder head.
22. Lift cylinder head from block complete with tappets, taking care not to damage the joint faces.
23. Remove gasket and thoroughly clean the joint faces.

Refitting

24. Ensure both joint faces and injector bores are clean, coat both sides of the gasket with a thin coat of jointing compound, see DATA, and place it over the two cylinder head studs with the marking 'TOP' uppermost and the marking 'FRONT' to the front of the engine.
25. Fit the cylinder head securing bolts and nuts, and tighten them in the order shown to the torque in DATA.
26. Connect oil feed pipe between block and cylinder head.
27. Fit induction pipe to manifold and tighten clip.
28. Refit radiator top hose.
29. Connect wires to thermostart unit and temperature transmitter.
30. Secure by-pass hose elbow, using a new gasket (early models) or secure by-pass hose (later models), to thermostat housing.
31. Fit rocker shaft assembly, ensuring slot in end of shaft is in the position shown in DATA before tightening nuts.
32. Connect rocker shaft oil feed pipe to cylinder head.
33. Check and adjust valve clearances. TB12.29.48.
34. Refit rocker cover, ensuring gasket is serviceable, and connect the breather hose.
35. Refit exhaust elbow and silencer.
36. Refit injectors and tighten nuts to torque in DATA.
37. Refit high pressure pipes — injection pump to injectors.
38. Refit leak-off pipe to injectors ensuring sealing washers are correctly positioned.
39. Refit leak-off pipe — No. 1 injector to filter — ensuring sealing washers are correctly positioned and re-connect fuel return pipe.
40. Refit fuel return pipe — injection pump to filter.
41. Refit fuel feed pipe — filter to injection pump.
42. Refit pipe — lift pump to filter.
43. Refill cooling system (see TB10).

continued

https://tractormanualz.com/

44. Connect battery.
45. Open fuel tap and bleed fuel system. TB19.50.07.
46. Check fuel, lubricating and cooling systems for leaks.
47. Run the engine to operating temperature, remove the rocker shaft and injectors then re-tighten the cylinder head bolts and nuts to the correct torque and in the correct order.
48. Refit components, operations 31 to 34 and 36 to 39.
49. Refit bonnet and side panels.
50. Repeat operations 47 and 48 after the engine has run for 25 hours.

DATA

Rocker shaft

Position of slot in front end of shaft . . . . . A = 30°

NOTE: In production a centre-punch mark is made on the front rocker pedestal to indicate the correct position

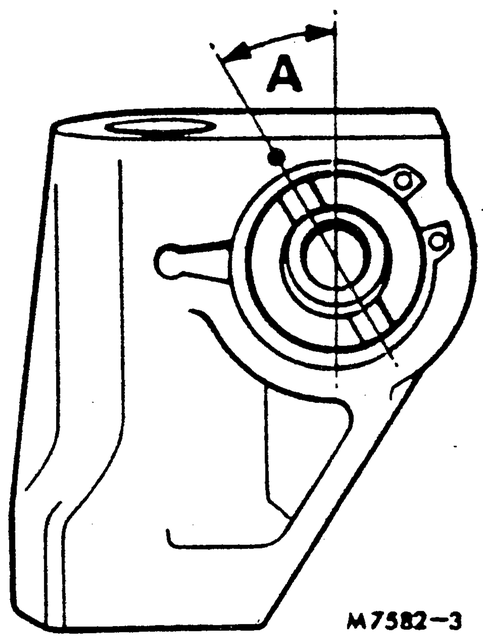

Torque tightening figures	Nm	kgf m	lbf ft
Cylinder head bolts and nuts	102	10,4	75
Injector securing nuts	16	1,7	12

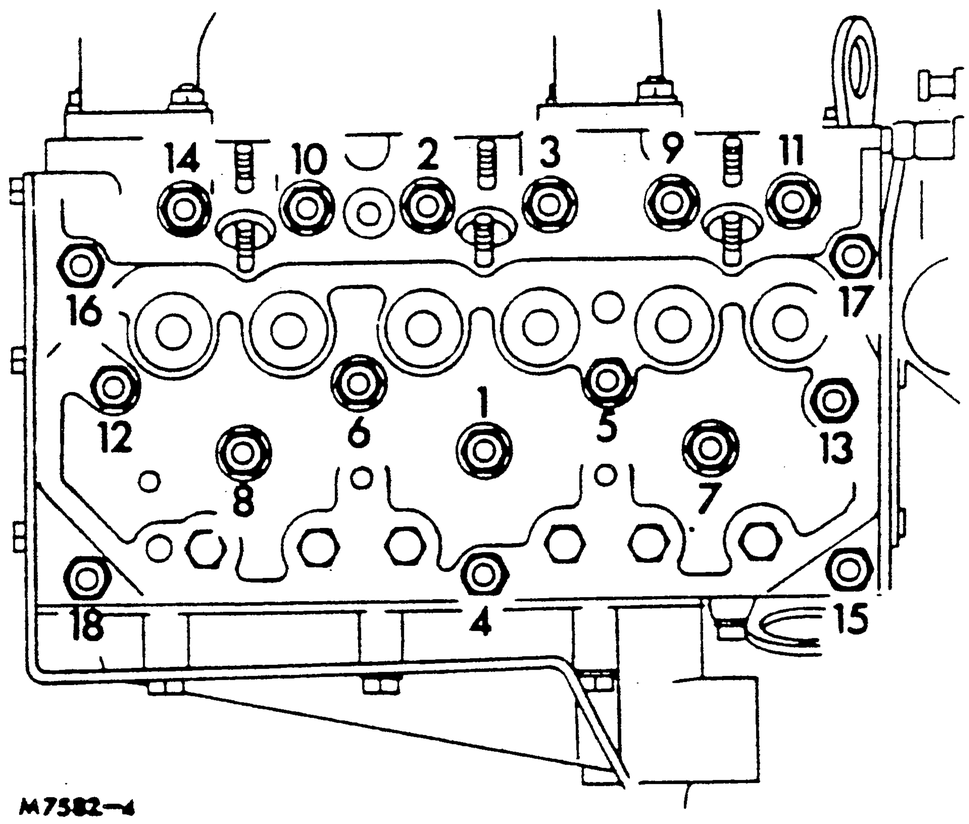

Special lubricants and compounds

Cylinder head jointing compound . . . . . Hylomar

https://tractormanualz.com/

CYLINDER HEAD

— Decarbonise and valve grind TB12.29.19

Service tools: 18G 29, 18G 45 (or LC 6118 with PD 6118-3 and LC 6118-6) PD 1D, PD 1D-1A, PD 1D-4

Hand tools: MS73 (valve seat cutter kit) is available to re-cut and narrow the valve seats.

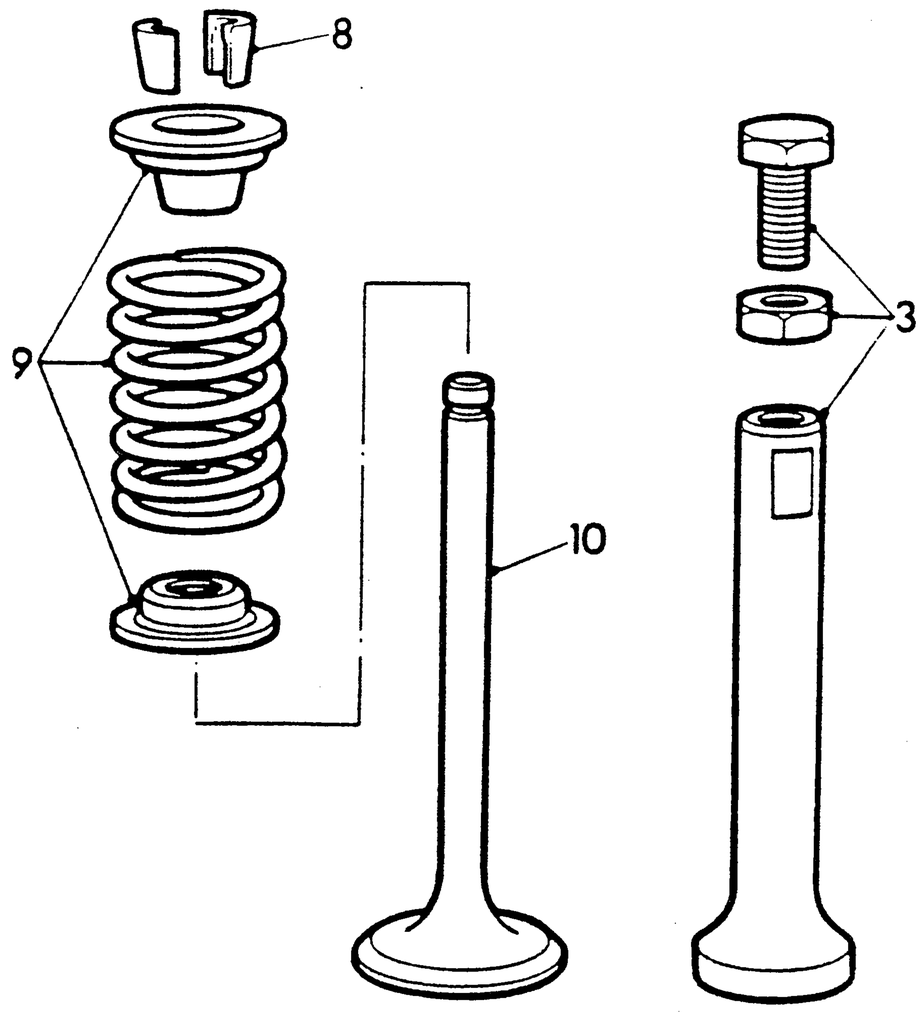

M7583—1

Dismantling

1. Remove cylinder head. TB12.29.11.
2. Remove thermostat housing complete with fuel filter.
3. Remove adjusting screws and withdraw tappets.
4. Remove exhaust manifold.
5. Remove inlet manifold.
6. Remove lifting brackets.
7. Mark the valves to enable them to be refitted in their original positions if they are re-used.
8. Depress each valve, using tool 18G 45 (or LC 6118 with PD 6118-3 and LC 6118-6), and remove split cotters.
9. Remove spring caps, springs and spring locating washers.
10. Withdraw valves.
11. Remove carbon deposits from cylinder head, pistons and valves.

Inspection

12. Inspect cylinder head for major damage and replace if required. The bottom face of the cylinder head may be machined; if damaged, noting:
    a. Remove the minimum amount of metal from the head up to the maximum stated in DATA.
    b. Ensure that the injector nozzle protrusion after machining does not exceed the maximum stated in DATA. Shim washers must on no account be used to reduce the nozzle protrusion.
    c. The valve head depth must be checked after machining and if necessary corrected to the limits in DATA.
13. Inspect valve guides and renew if worn (see below).
14. Inspect valve stems for straightness or excessive wear and the valve faces for pitting or burning; if necessary, replace valves or regrind to the angle in DATA.
15. Check each valve seat face; if necessary recondition or fit new exhaust valve seat inserts (see below).
16. Check valve springs and renew them if they are not as specified in DATA.
17. Inspect the water passages in the head for scaling and if required clean, dry and blow them clear using compressed air. Use a proprietary descaling solution if the scaling is excessive.
18. If possible, the head should be water tested for leaks using warm water at the pressure stated in DATA.

Valve seat reconditioning

19. Remove glazing from valve seats.
20. Re-cut seats, removing the minimum amount of metal necessary to correct them.
21. Re-cut flares, between the valve seats and the cylinder head face, to the dimensions in DATA.
22. Check that the depth of the valve heads from the cylinder head face is within the limits in DATA, noting:
    a. If the depth of any of the inlet valves exceeds the maximum figure, even with a new valve fitted and the cylinder head machined, the cylinder head must be replaced.
    b. If the depth of any exhaust valve exceeds the maximum figure, even with a new valve fitted, a seat insert must be fitted (see below).
23. Lap valves to seats with fine grinding paste, using tool 18G 29.
    NOTE: If kit MS 73 is used to re-cut the valve seats, lapping of the seats should not be required.
24. Wash all traces of grinding paste or swarf from the head and valves with suitable solvent and dry thoroughly.

continued

https://tractormanualz.com/

Valve guide replacement – additional work

– Inlet TB12.29.19/01

– Exhaust TB12.29.19/02

25. Remove worn guide, using tools PD 1D and the smaller diameter bar of tool PD 1D-1A.
26. Fit new guides, with their counterbored ends downward, using tools PD 1D, PD 1D-1A and PD 1D-4. Tool PD 1D-4 acts as a stop to ensure that the guide is pulled in to its correct height above the top face of the cylinder head.

Exhaust valve seat inserts – additional work

If after reconditioning the exhaust valve seats, the depth of the valve head from the cylinder head face is greater than the maximum stated in DATA, exhaust valve seat inserts must be fitted as detailed below.

27. Fit a new valve guide.
28. Cut the old seat away to the dimensions in DATA, using the bore of the new valve guide as a pilot, taking care that the cutting is clean and that all swarf is removed.
29. Press in the new seat using a tool manufactured to the dimensions in DATA and using the valve guide bore as a pilot.

NOTE: Use steady pressure from a hand, or hydraulic press. Do not hammer the insert in or use any type of lubricant.

30. Inspect the insert to ensure that it is pressed in squarely and to the bottom of the recess.
31. Cut the valve seat so that the depth of the valve head below the cylinder head face is within the limits in DATA.
32. Cut the flare between the valve seat and cylinder head face to the dimensions in DATA.
33. Lap valves to seats with fine grinding paste, using tool 18G 29.
    NOTE: If kit MS 73 is used to re-cut the valve seats, lapping of the seats should not be required.
34. Wash all traces of grinding paste and swarf from the head and valves with a suitable solvent and dry thoroughly.

Reassembling

35. Reverse procedure in 1 to 10, noting:
    a. Clean joint faces and use new gaskets.
    b. Lubricate valve stems with clean engine oil.
    c. Ensure that a thermostat is fitted to the housing. The engine should never be run without a thermostat fitted as continual circulation through the by-pass would cause overheating.
36. Refit cylinder head. TB12.29.11.

DATA

Cylinder head

Machining allowance on bottom face	0,30 mm (0.012 in), providing the injector nozzle protrusion does not exceed 4,67 mm (0.184 in)
Leak test water pressure	207 kN/m^2 (2,11 kgf/cm^2, 30 lbf/in^2)
Valve seat angle	45°
Tappet bore diameter	15,86 to 15,89 mm (0.6245 to 0.62575 in)
Valve guide bore diameter	12,69 to 12,71 mm (0.4995 to 0.5005 in)

Valve guides

Inside diameter	7,99 to 8,01 mm (0.3145 to 0.3155 in)
Outside diameter	12,73 to 12,74 mm (0.50125 to 0.50175 in)
Interference fit in cylinder head	0,02 to 0.06 mm (0.00075 to 0.00225 in)
Guide protrusion above spring seating face	14,73 to 15,09 mm (0.580 to 0.594 in)

Valves (inlet and and exhaust)

Valve stem diameter	7,90 to 7,92 mm (0.311 to 0.312 in)
Clearance fit of valve in guide	0,06 to 0,11 mm (0.0025 to 0.0045 in)
Valve face angle	45°
Valve head depth from cylinder head face	1,47 to 1,87 mm (0.058 to 0.073 in)

Valve springs

Free length	45,29 to 45,80 mm (1.783 to 1.803 in)
Fitted length	38,10 mm (1.500 in)
Load at fitted length	9,44 to 11,24 kg (20.75 to 24.75 lb)

continued

https://tractormanualz.com/

Valve inserts (exhaust only)

Cylinder head machining dimensions:

A. 42,62 to 42,64 mm (1.678 to 1.679 in)
B. 7,87 to 7,92 mm (0.310 to 0.312 in)
C. 0,38 mm (0.015 in) maximum radius

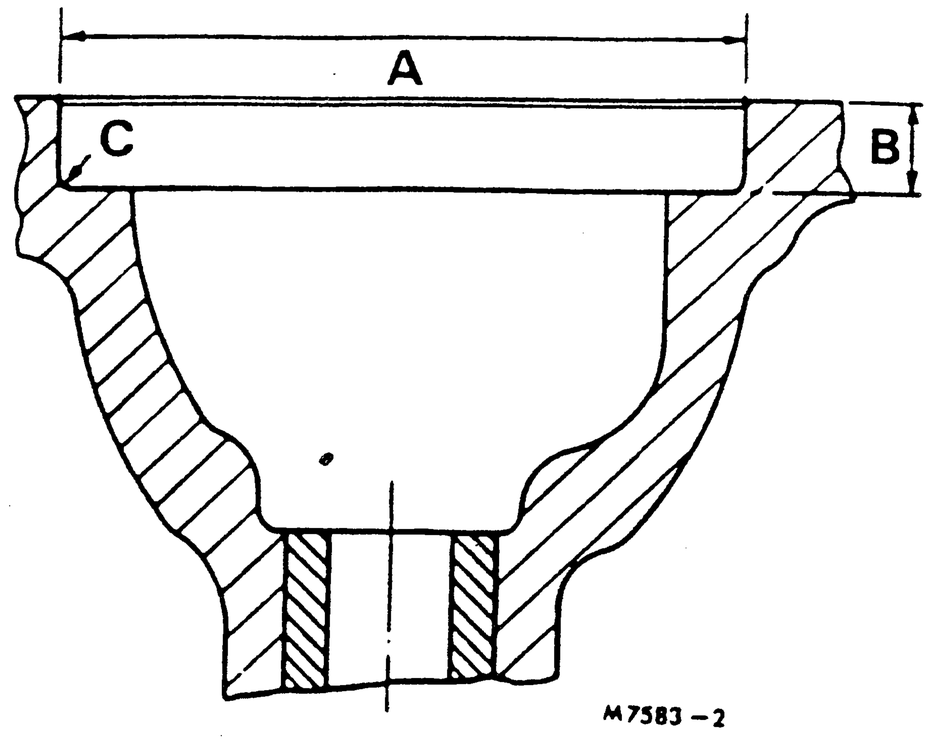

M7583–2

Valve insert machining dimensions

A. 90°
B. 45°
C. 30°
D. 3,30 to 3,51 mm (0.130 to 0.138 in)

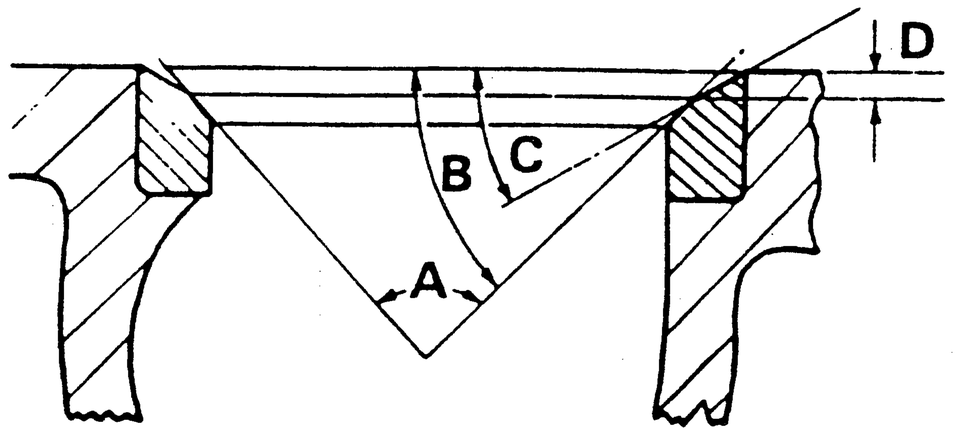

M7583–3

Valve seat pressing-in tool

A. 90 mm (3.5 in)
B. 70 mm (2.75 in)
C. 19 mm (0.75 in)
D. 7,85 to 7,87 mm (0.309 to 0.310 in)
E and F. 1,6 mm (0.062 in) at 45°
G. 0,8 mm (0.031 in) radius
H. 30,48 to 30,50 mm (1.200 to 1.201 in)
J. 6,35 mm (0.25 in)
K. 42,34 to 42,59 mm (1.667 to 1.677 in)
Material: EN32A case hardened and ground

M7583–4

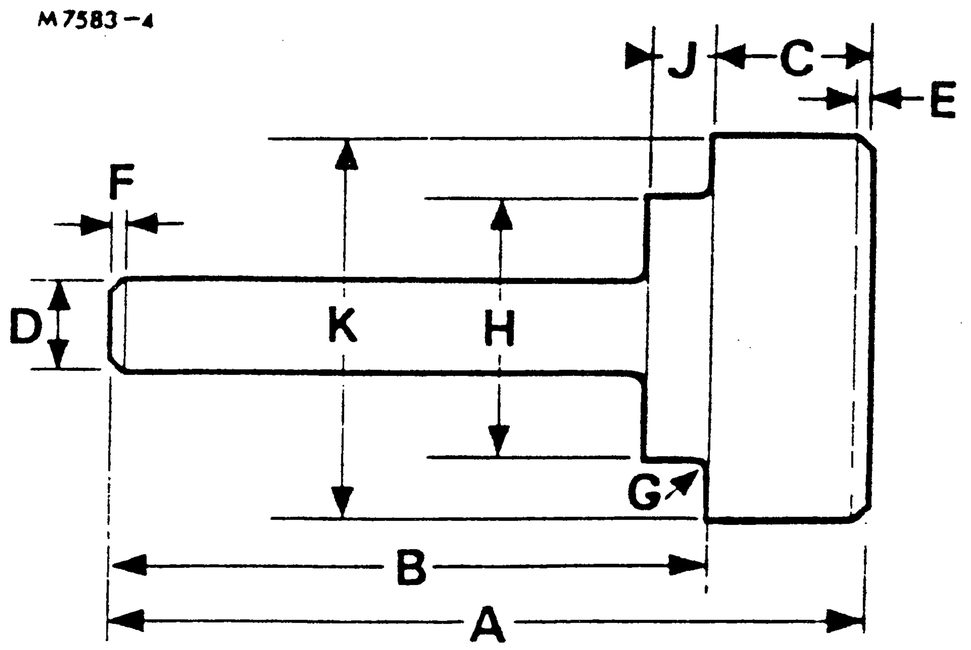

https://tractormanualz.com/

VALVE CLEARANCES

— Check and adjust TB12.29.48

NOTE: Check clearances with engine cold.

1. Detach breather hose and remove rocker cover.
2. Remove rubber plug from inspection hole in flywheel housing behind the engine oil filter.
3. Rotate the engine until the T.D.C. mark on the flywheel is in the centre of the inspection hole and No. 1 piston is at the beginning of its compression stroke (both valves fully closed).
4. Check the clearance between each rocker and adjusting screw of Nos. 1, 2, 3 and 5 valves using a 0,3 mm (0.012 in) feeler gauge.
5. Adjust clearances as required by slackening the locknut and turning the adjusting screw until the clearance is correct, then hold the tappet and adjusting screw and tighten the locknut.
6. Check the clearance to ensure that it did not alter when the locknut was tightened.
7. Turn the engine 360° until the T.D.C. is at the centre of inspection hole again and repeat procedure in 4 to 6 for Nos. 4 and 6 valves.
8. Refit rubber plug to inspection hole.
9. Refit rocker cover, ensuring that the gasket is serviceable, and reconnect the breather hose.

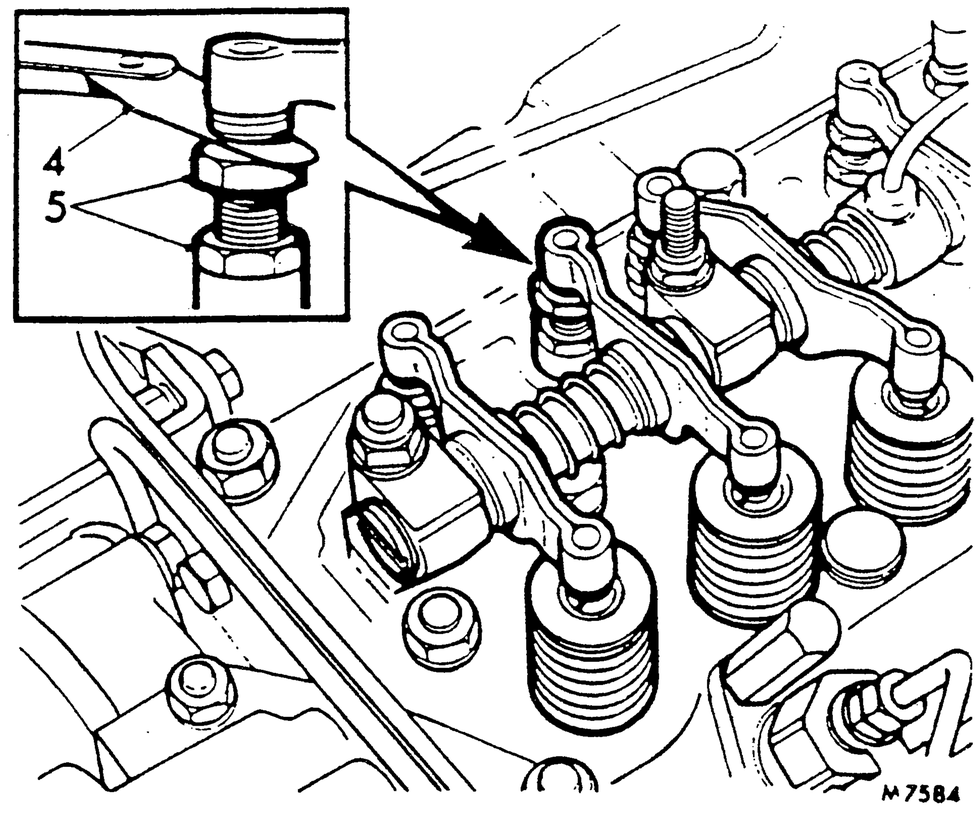

ROCKER SHAFT ASSEMBLY

— Remove and refit TB12.29.54

Removing

1. Detach breather pipe and remove rocker cover.
2. Disconnect rocker shaft oil feed pipe from the cylinder head.
3. Remove nut and washers and lift the rocker shaft.

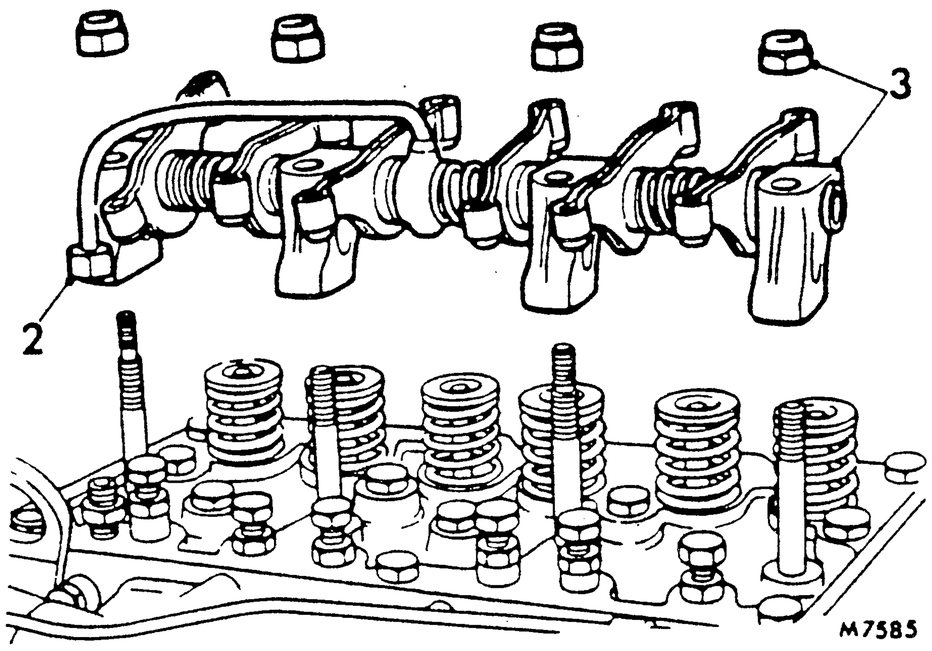

Refitting

4. Position rocker shaft, fit washers and nuts but do not tighten.
5. Position the slot in the front end of the shaft as shown in DATA, then tighten the nuts.
6. Check and adjust valve clearances. TB12.29.48.
7. Refit rocker cover ensuring the gasket is serviceable and connect the breather hose.

DATA

Rocker shaft

Position of slot in front end of shaft . . . . . A = 30°

NOTE: In production a centre-punch mark is made on the front pedestal to indicate the correct position.

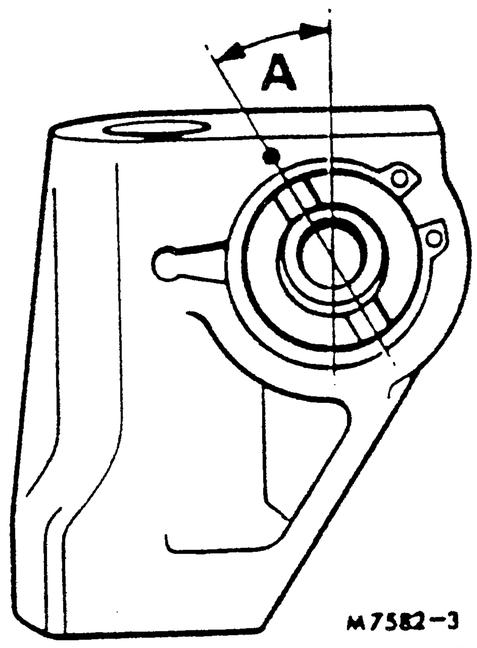

TB12.29.48
TB12.29.54

https://tractormanualz.com/

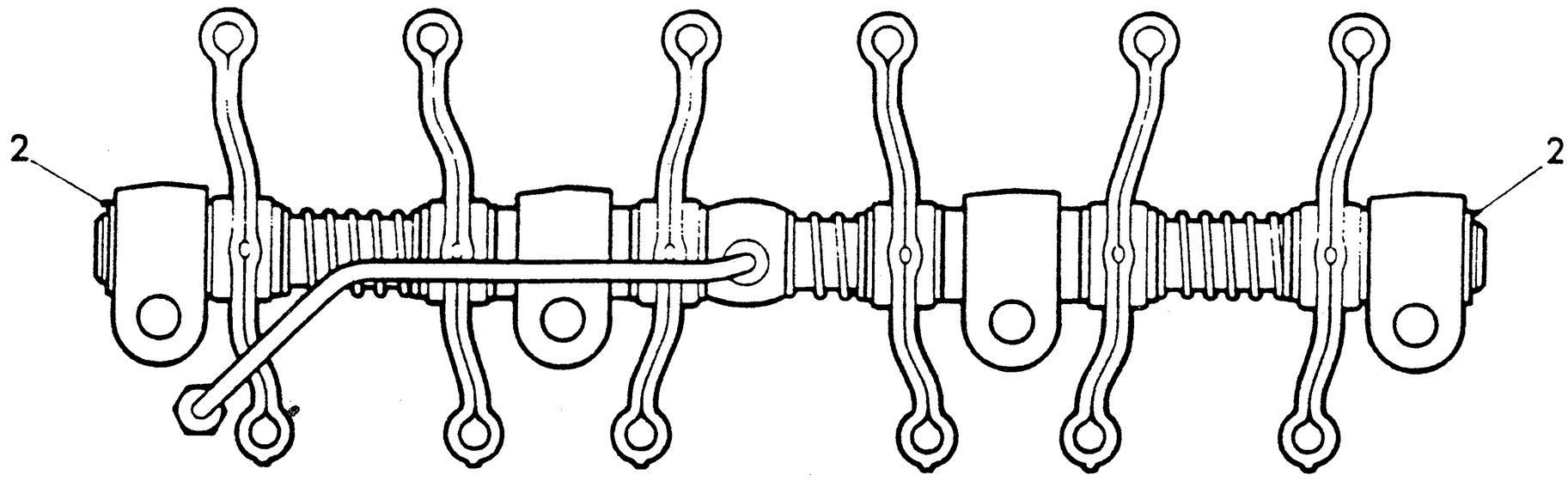

ROCKER SHAFT

— Overhaul TB12.29.55

Dismantling

1. Remove rocker shaft. TB12.25.54.
2. Remove clips from ends of shaft.
3. Withdraw components, noting their order of assembly and keeping them in their relative positions.

Inspection

4. Wash the components in a suitable solvent, ensuring that the oil passages are clear, then dry them thoroughly.
5. Visually inspect and replace any part showing signs of excessive wear or damage.
6. Check dimensions and clearances specified in DATA and replace worn parts.

Reassembly

7. Reassemble components onto shaft in their original positions.
8. Refit rocker shaft. TB12.25.54.

DATA

Rocker shaft

Shaft diameter	15,81 to 15,84 mm (0.62225 to 0.62375 in)
Rocker lever bore diameter	15,86 to15,89 mm (0.6245 to 0.62575 in)
Clearance fit of levers on shaft	0,02 to 0,09 mm (0.00075 to 0.00350 in)

https://tractormanualz.com/

ENGINE

— Remove and refit TB12.41.01

Removing

1. Remove front frame assembly and drain the sump as detailed in removing the sump. TB12.60.44.
2. Support the engine on its lifting eyes, using suitable overhead lifting equipment.
3. Disconnect all pipes, wiring harnesses, hoses and cables to enable the engine to be separated from the transmission as detailed in removing the clutch. TB33.10.01.
4. Support the transmission under the clutch housing, using a suitable jack and packing.
5. Remove nuts and setscrews securing flywheel housing to clutch housing.
6. Withdraw the engine assembly from the transmission ensuring the flanges are kept parallel and level so that no strain is placed on the clutch drive shaft assembly.
7. Lower the engine onto suitable supports and remove the overhead lifting equipment.

Refitting

8. Reverse procedure in 1 to 7, noting:
   a. Engage the P.T.O. and turn the output shaft and engine crankshaft, as required, to align the clutch drive splines as the engine is being positioned.
   b. Tighten flywheel housing to clutch housing nuts and setscrews to the torque in DATA.
   c. Ensure cooling system, engine sump and steering system are replenished before starting the engine.

DATA

Torque tightening figures	Nm	kgf m	lbf ft
Flywheel housing to clutch housing nuts and setscrews .	37	3,7	27

ENGINE

— Tune TB12.49.01

1. Remove, test and refit injectors. TB19.60.01.
2. Check fuel injection pump timing. TB19.30.07.
3. Check and adjust valve clearances. TB12.29.48.
4. Renew air cleaner element (see 'MAINTENANCE' TB10).

https://tractormanualz.com/

FLYWHEEL HOUSING

— Remove and refit TB12.53.01

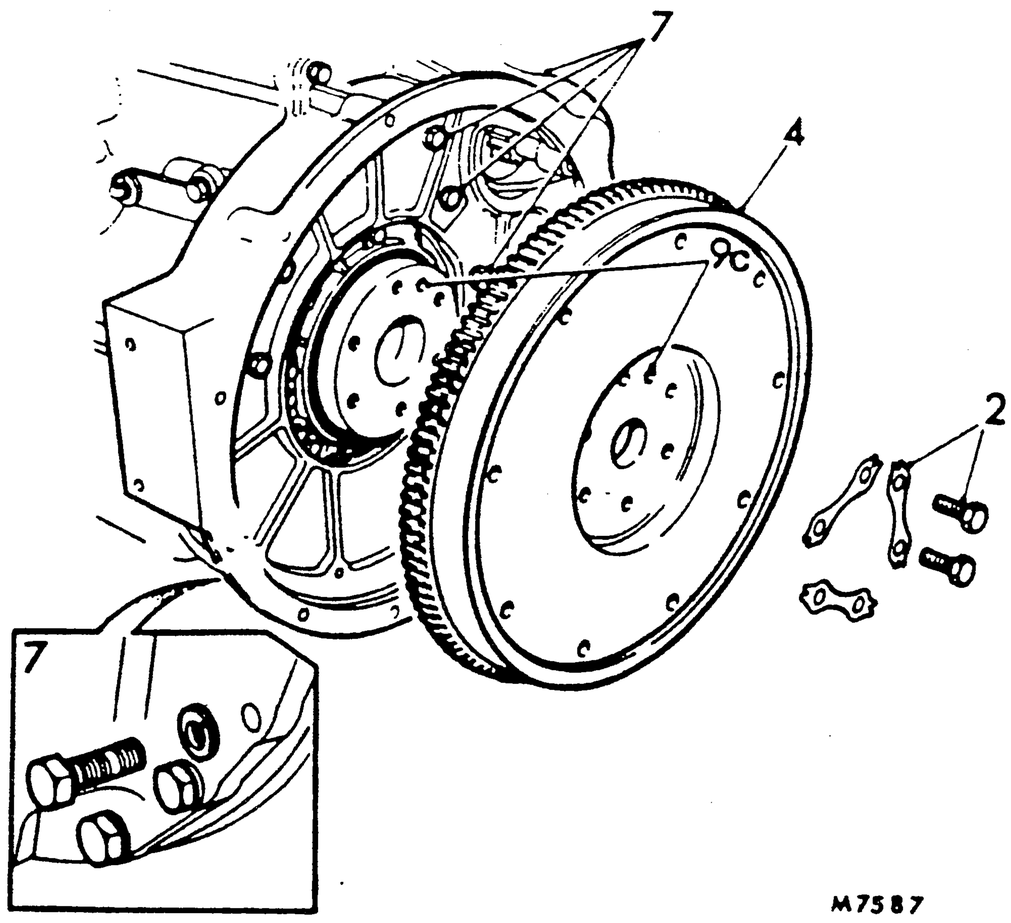

Removing

1. Remove clutch. TB33.10.01.
2. Bend back lock tabs to release flywheel setscrews.
3. ** Remove flywheel setscrews and lockplate. **
4. Withdraw flywheel from crankshaft.
5. Remove toolbox.
6. Remove starter motor. TB86.60.01.
7. Remove bolts securing flywheel housing to cylinder block and sump and detach housing, noting the two dowels locating it to the cylinder block.
8. Remove the two studs from the flywheel housing.

Refitting

9. Reverse procedure in 1 to 8, noting:
   a. Thoroughly clean the faces of the block, housing and sump and ensure they are free from burrs.
   b. If a new housing is fitted, or the original housing fitted to a new cylinder block, it must be aligned with its bore concentric with the crankshaft and its outer face square to the axis of the crankshaft, within the limits in DATA, using a dial gauge attached to the crankshaft flange. When the alignment is correct, tighten the bolts evenly and ream the dowel holes before fitting the dowels.
   NOTE: All adjustments to align the housing must be made to the housing; under no circumstances must the rear face of the cylinder block be interfered with.
   c. Align unused holes in crankshaft flange and flywheel when refitting the flywheel and tighten the setscrews to the torque in DATA.

DATA

Flywheel housing

Alignment of housing	The housing bore must be concentric to the crankshaft, and the housing to clutch casing joint face must be square to the crankshaft axis within a total indicator reading of 0,20 mm (0.008 in)

Torque tightening figures

	Nm	kgf m	lbf ft
Flywheel setscrews	108	11	80

https://tractormanualz.com/

FLYWHEEL

— Remove and refit

Starter ring gear	TB12.53.19
Spigot bearing	TB12.53.20

Removing flywheel

1. Remove clutch. TB33.10.01.
2. Bend back tabs to release flywheel setscrews.
3. Remove flywheel setscrews and locking plates.
4. Withdraw flywheel from crankshaft.

Starter ring gear

5. Drill a hole into the ring gear in line with the root between two teeth.
   NOTE: Do not drill through the ring into the flywheel.
6. Split ring gear across hole, using a hammer and chisel.
7. Check mating surfaces of ring gear and flywheel are clean and free from burrs.
8. Heat ring gear uniformly to 275°C (527°F).
   CAUTION: Heating the ring gear above 275°C (527°F) will affect its temper and soften the steel.
9. Fit ring gear squarely on to flywheel, bore chamfer leading and press or tap it firmly against the shoulder using a piece of hardwood. Allow to cool naturally.

Spigot bearing

10. Drive or press bush from boss in centre of flywheel.
    NOTE: On early engines a ball bearing is fitted.
11. Refit bearing or bush to flywheel.
    NOTE: If the boss into which the bush fits is loose in the flywheel it should be secured using Loctite 601.

Refitting flywheel

12. Reverse procedure in 1 to 4, aligning the unused holes in the flywheel and crankshaft flange and tightening setscrews to torque in DATA.

DATA

Torque tightening figures	Nm	kgf m	lbf ft
Flywheel setscrews.	110	11	80

https://tractormanualz.com/

OIL FILTER ELEMENT

— Remove and refit TB12.60.02

Removing

1. Unscrew filter cartridge from head and discard it.

Refitting

2. Lubricate new seal with engine oil and fit it to the new cartridge.
3. Screw the cartridge onto the filter head using hand force only; do not use a spanner; do not overtighten.
4. Check the filter for leakage immediately after the engine is started.

OIL PUMP

— Remove and refit TB12.60.26

Removing

1. Remove sump. TB12.60.44.
2. Remove the five setscrews and detach the timing case bottom cover taking care not to damage the gasket between the cover and timing case.
3. Release pick-up pipe support bracket from the centre web.
   NOTE: The pipe is not secured to the web on later engines.
4. Disconnect delivery pipe union from crankcase.
5. Remove retaining circlip and move the oil pump idler gear forward on its spindle.
6. Remove the three screws securing the oil pump to the front main bearing cap.
7. Detach the pump assembly.
8. Disconnect pipes from pump, noting their relative positions.

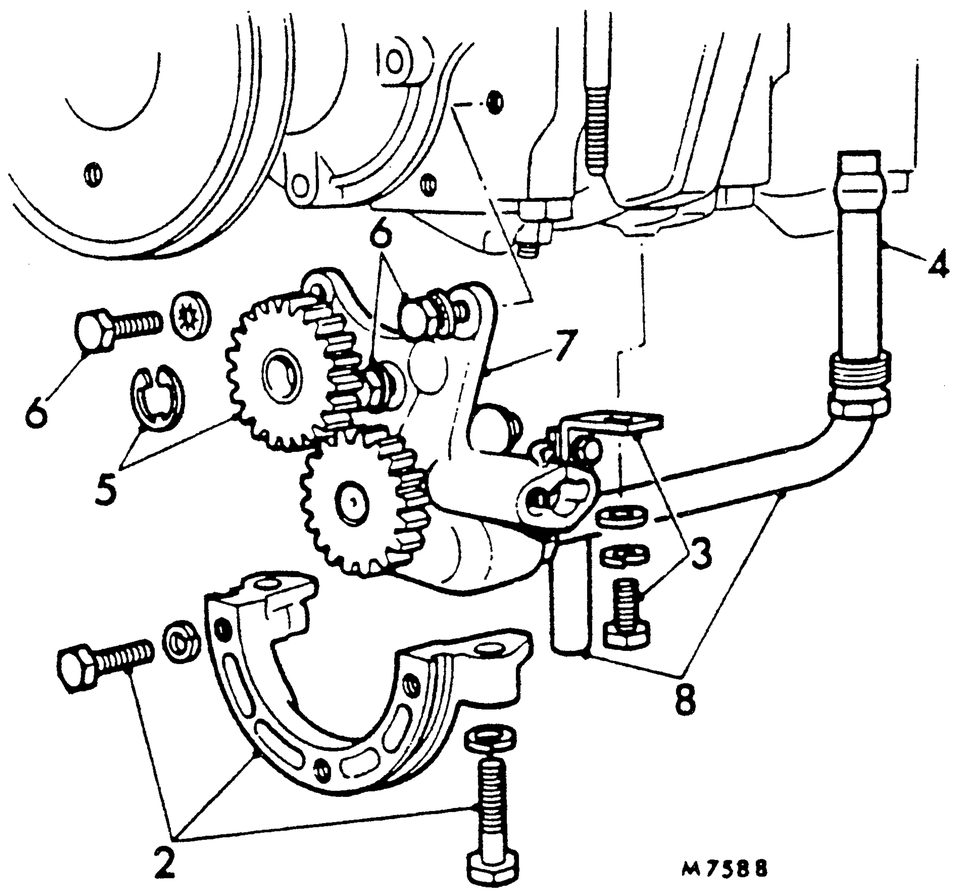

Refitting

9. Reverse procedure in 1 to 8, noting:
   a. Fit and tighten the two screws securing the timing case bottom cover to the timing case before fitting the three remaining screws securing it to the timing cover.

https://tractormanualz.com/

OIL PUMP

— Overhaul TB12.60.32

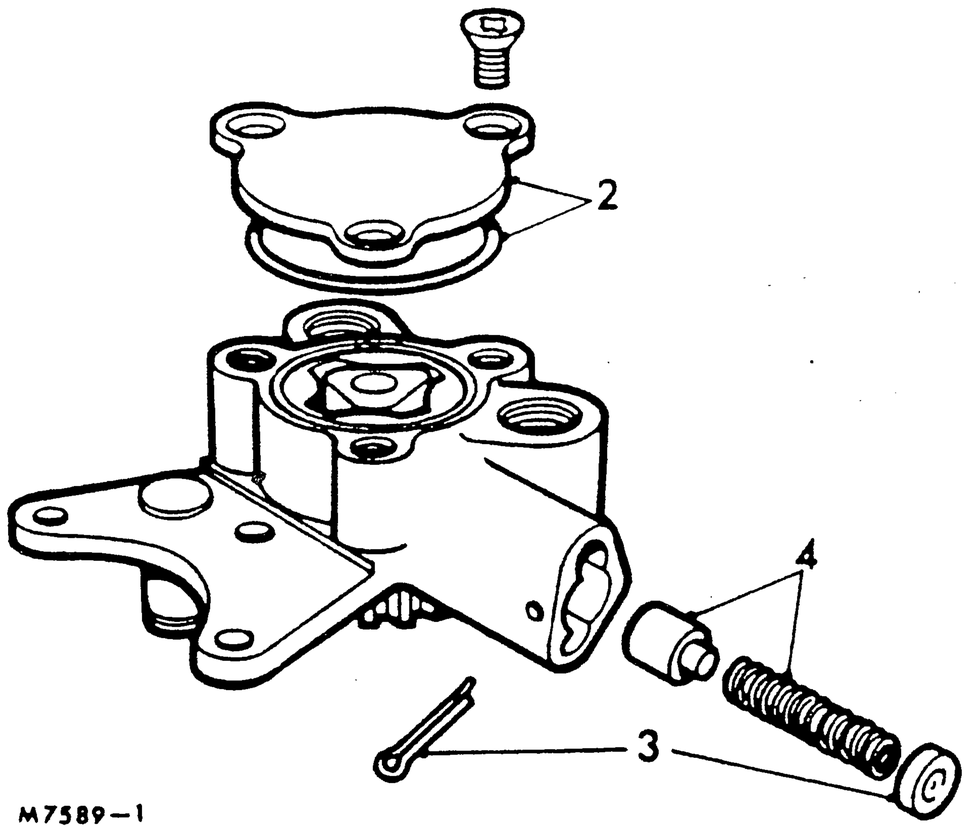

M7589—1

Dismantling

1. Remove oil pump. TB12.60.26.
2. Remove end-plate and O-ring seal.
3. Remove split pin and detach the relief valve end cover.
4. Withdraw relief valve spring and plunger.

Inspection

5. Replace pump complete if any of the following exceed the maximum figures quoted in DATA:
   a. The end-float of the rotors in the body, measured using feeler gauges and a straight-edge.
   b. The clearance, 'A', between the outer rotor and pump body.
   c. The clearance, 'B'. between the inner and outer rotors measured in all three positions.
6. Renew the relief valve spring and plunger if they are damaged or worn.

Reassembly

7. Reverse procedure in 1 to 4.

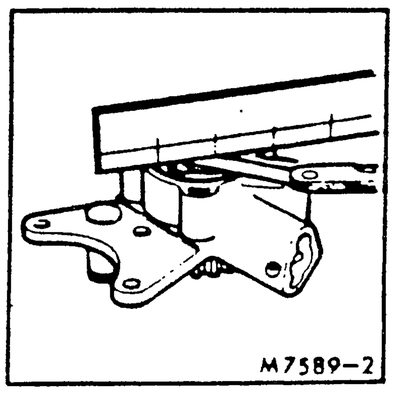
M7589—2

DATA

Oil pump

End-float (inner rotor) = 0,038 to 0,076 mm (0.0015 to 0.003 in)
End-float (outer rotor) = 0,01 to 0,06 mm (0.0005 to 0.0025 in)

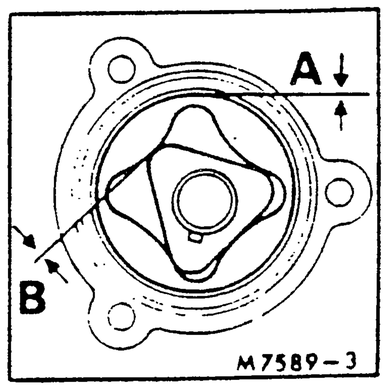

M7589—3

A = 0,28 to 0,33 mm (0.011 to 0.013 in)
B = 0,013 to 0,064 mm (0.0005 to 0.0025 in)

DATA

Engine oil pressure	kN/m²	kgf/cm²	lbf/in²
At idling speed (hot)	70 to 140	0,7 to 1,4	10 to 20
At maximum speed (hot)	210 to 420	2,1 to 4,2	30 to 60

https://tractormanualz.com/

SUMP

— Remove and refit TB12.60.44

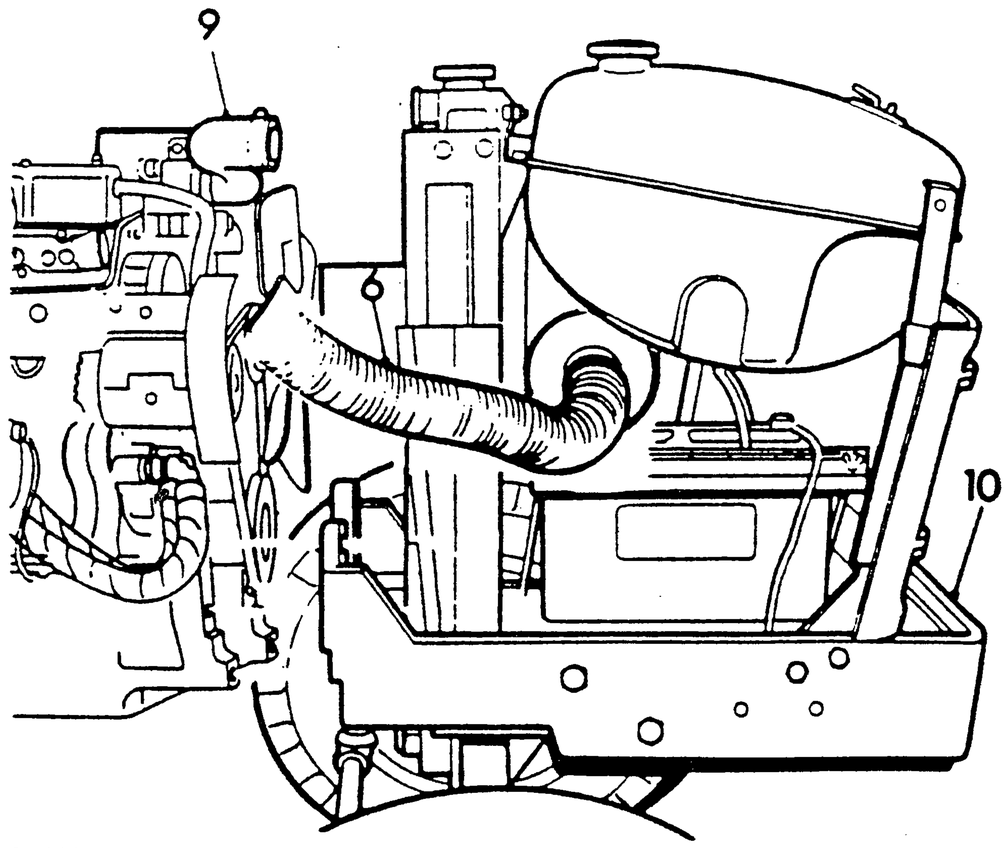

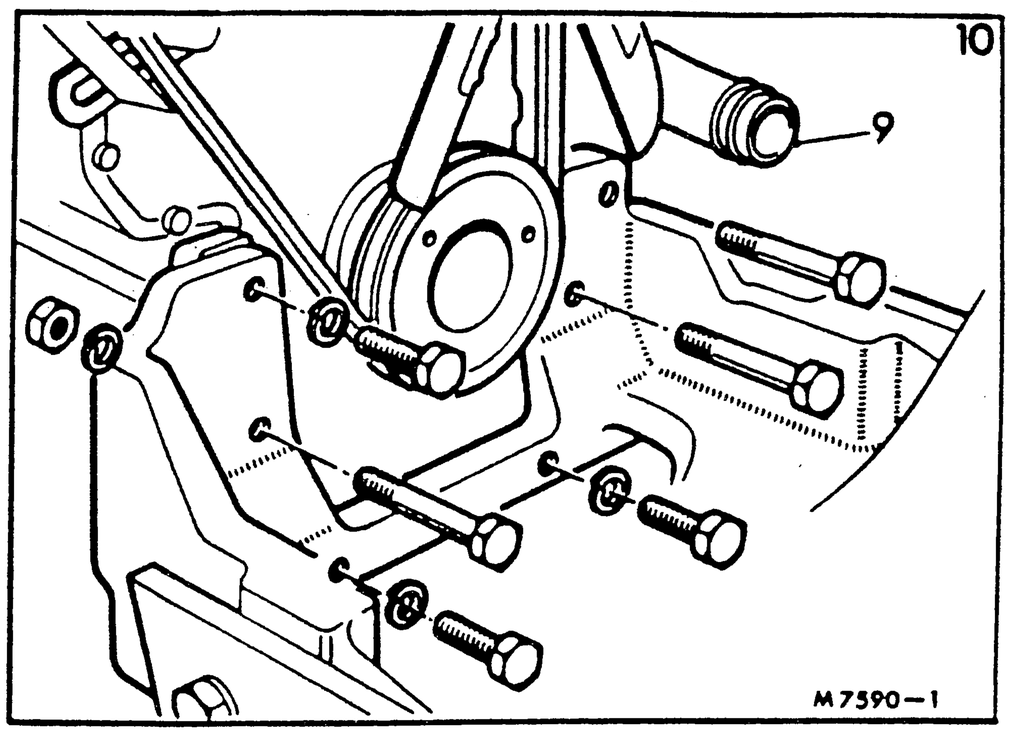

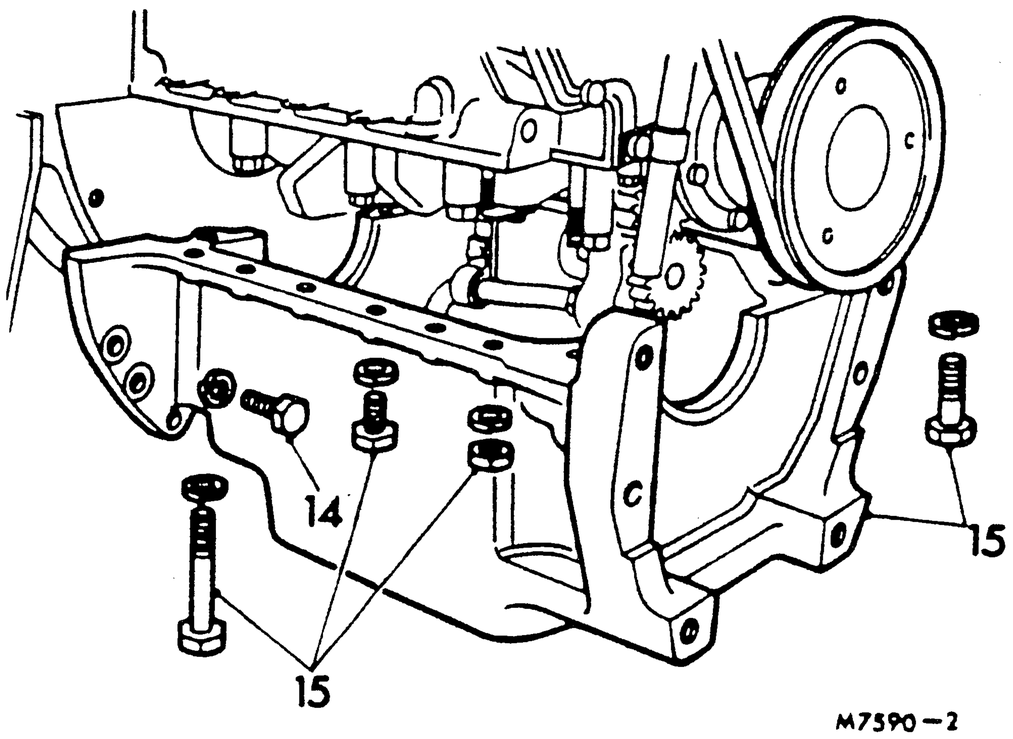

Removing

1. Remove side panels and disconnect leads from battery terminals.
2. Drain sump and cooling system.
3. Remove bonnet.
4. Remove front and side panels.
5. Disconnect pipes from steering ram, release clip securing pipes to engine and draw them through the radiator frame.
6. Disconnect hose between air cleaner and manifold.
7. Disconnect wires from headlamp and fuel tank, unclip them and draw all wires clear of the radiator frame.
8. Close fuel tap and remove fuel supply and spill return pipes.
9. Disconnect top and bottom hoses from radiator.
10. Support front frame assembly and clutch housing to enable the front frame assembly to be separated from the sump, remove the bolts, nuts and setscrews, noting their positions, and withdraw the assembly forward.
11. Support engine to take its weight when the sump is removed.
12. Withdraw dipstick.
13. Support sump with a trolley jack and suitable packing.
14. Remove screws securing sump to flywheel housing.
15. Remove screws and nuts securing sump to crankcase then lower and withdraw sump.
16. Clean sump, and oil strainer if fitted, using a suitable solvent. Thoroughly clean joint faces and remove all traces of gaskets and cork strips.

Refitting

17. Lightly smear crankcase joint faces with jointing compound, see DATA, and position gaskets, ensuring all holes align and that the mitred ends go right up into the recesses of the timing case bottom cover and rear main bearing cap.
18. Lightly smear cork strips with jointing compound, see DATA, and position them in the grooves in the timing case bottom cover and rear main bearing cap.

continued

https://tractormanualz.com/

19. Lift sump into position, fit all screws finger-tight, then tighten the sump to flywheel housing screws followed by the sump to crankcase screws.
20. Insert dipstick.
21. Reverse procedure 1 to 10, tightening front frame to sump bolts to the torque in DATA.
22. Remove filler/level plug from power steering pump reservoir and top up as necessary to the bottom of the filler/level plug hole.
    NOTE: When replenishing the reservoir ensure that the wheels are in the 'full right lock' position and the engine is running. Operate steering from lock to lock to expel air from system, top up and repeat procedure as necessary until the reservoir level remains constant then refit the filler/level plug.

DATA

Special lubricants and compounds			
Jointing compound	Hylomar		
Torque tightening figures	**Nm**	**kgf m**	**lbf ft**
Front frame to sump bolts and screws	230	23,5	170

OIL PRESSURE RELIEF VALVE

— Remove and refit **TB12.60.56**

Removing

1. Remove the oil pump. TB12.60.26.
2. Remove oil pressure relief valve components and inspect them for wear and damage, see TB12.60.32.

Refitting

3. Reverse procedure in 1 and 2.

https://tractormanualz.com/

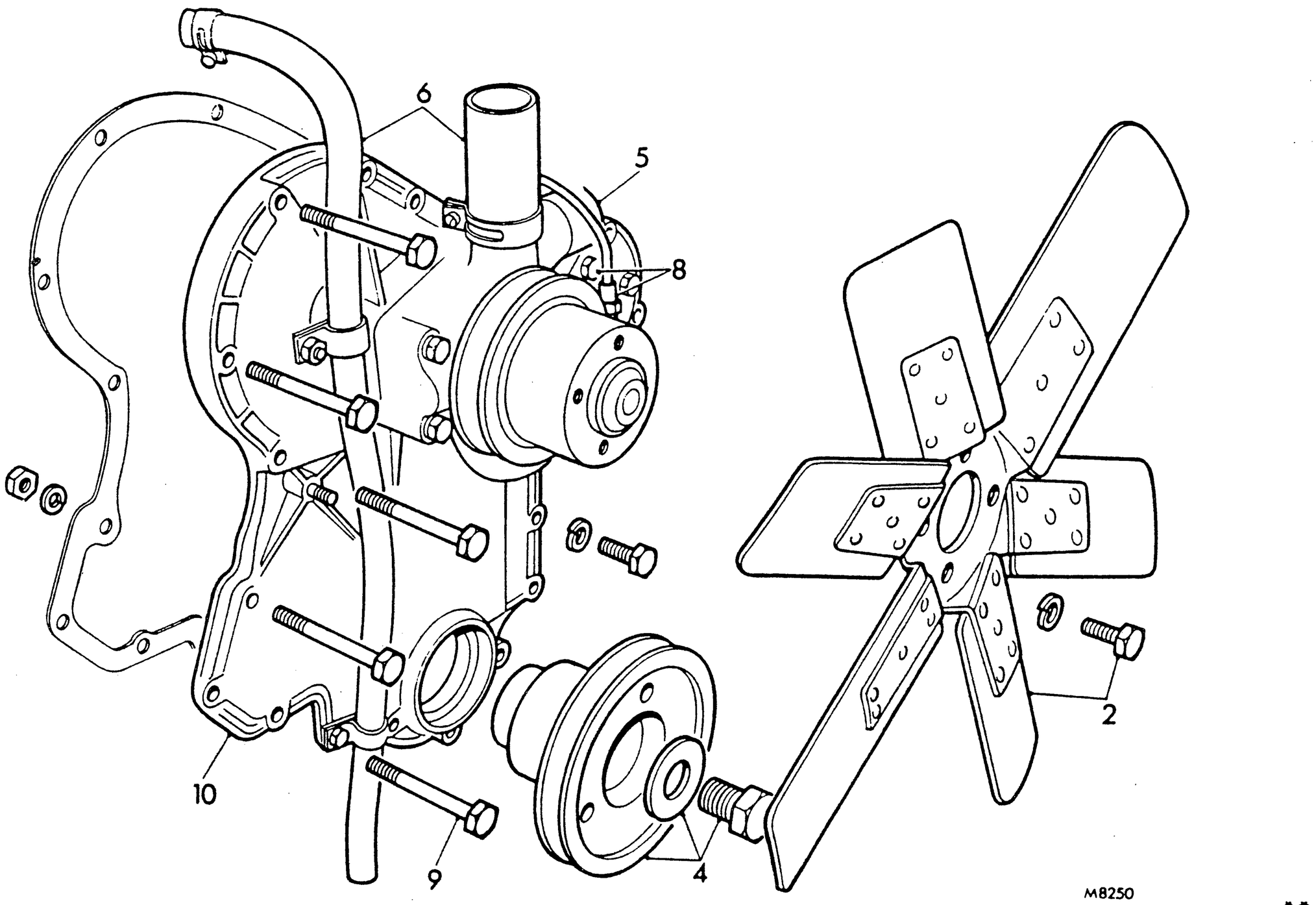

TIMING GEAR COVER

— Remove and refit **TB12.65.01**

Removing

1. Remove radiator. TB26.40.03.
2. Remove fan blades.
3. Slacken alternator mounting bolts and adjusting link setscrews, and remove fan belt.
4. Remove setscrew and washer, and withdraw crankshaft pulley.
5. Detach hose, between water pump and cylinder block, from the water pump.
6. Remove the two screws securing the by-pass hose elbow (early models) to the thermostat housing or detach by-pass hose (later models) and disconnect the breather pipe.
7. Remove adjusting link between alternator and timing cover.
8. Remove top left-hand screw retaining water pump and disconnect tractometer cable.
9. Remove bolts and setscrews retaining timing cover to the engine.
10. Detach timing cover assembly taking care not to damage the crankshaft front oil seal and clean the joint faces.

Refitting

11. Reverse procedure 1 to 10, noting:
    a. Use a new gasket.
    b. Centralise cover around crankshaft by temporarily refitting crankshaft pulley before tightening securing bolts and setscrews.
    c. Use a new seal on the bottom setscrew.
    d. Tension fan belt. TB26.20.09.
    e. Tighten crankshaft pulley setscrew to torque in DATA.

DATA

Torque tightening figures	**Nm**	**kgf m**	**lbf ft**
Crankshaft pulley retaining screw	149	15,2	110

https://tractormanualz.com/

TIMING GEARS – SET

– Remove and refit **TB12.65.20**

Service tool: 18G 1229

Removing

1. Remove timing gear cover. TB12.65.01.
2. Turn the engine until the timing marks on the crankshaft, camshaft and injection pump are toward the idler gear.
3. Slacken the screws retaining the camshaft gear and injection pump drive gear.
4. Unlock and remove the bolt retaining the idler gear to its spigot.
5. Remove the idler gear.
   NOTE: Do not turn the crankshaft, or camshaft while the idler gear is removed, unless the rocker shaft is removed, or the valves will foul the pistons.
6. Remove the camshaft gear, crankshaft gear and injection pump gear as required, noting:
   a. If the crankshaft gear is tight on the crankshaft it may be removed by refitting the pulley securing bolt and using tool 18G 1229 or a suitable puller.

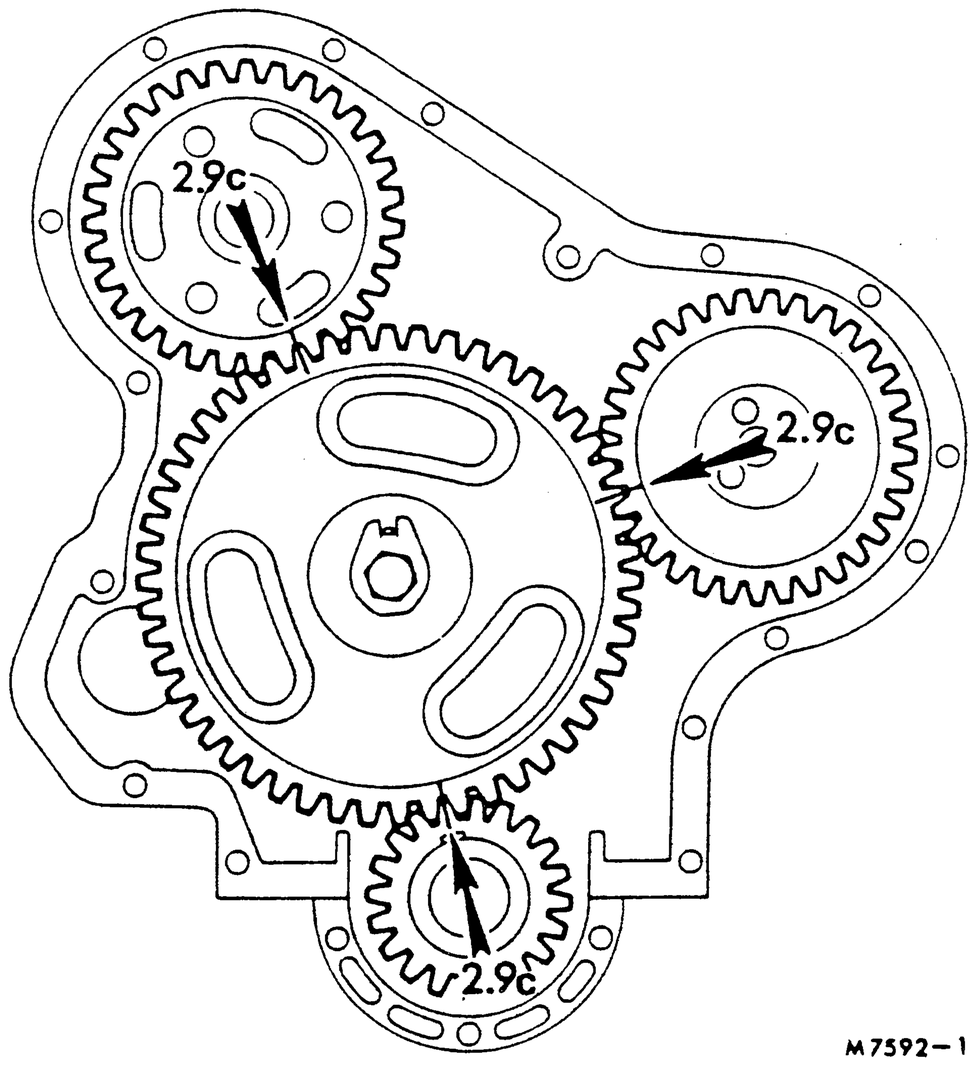

M7592–1

Inspection

7. Check the idler gear hub diameter, see DATA, and check it for damage. Fit a new hub if required, so that the small locating peg is entered into the through drilling in the hub and ensure that the flange of the hub is flush with the timing case.
8. Inspect gears and replace as required.

continued

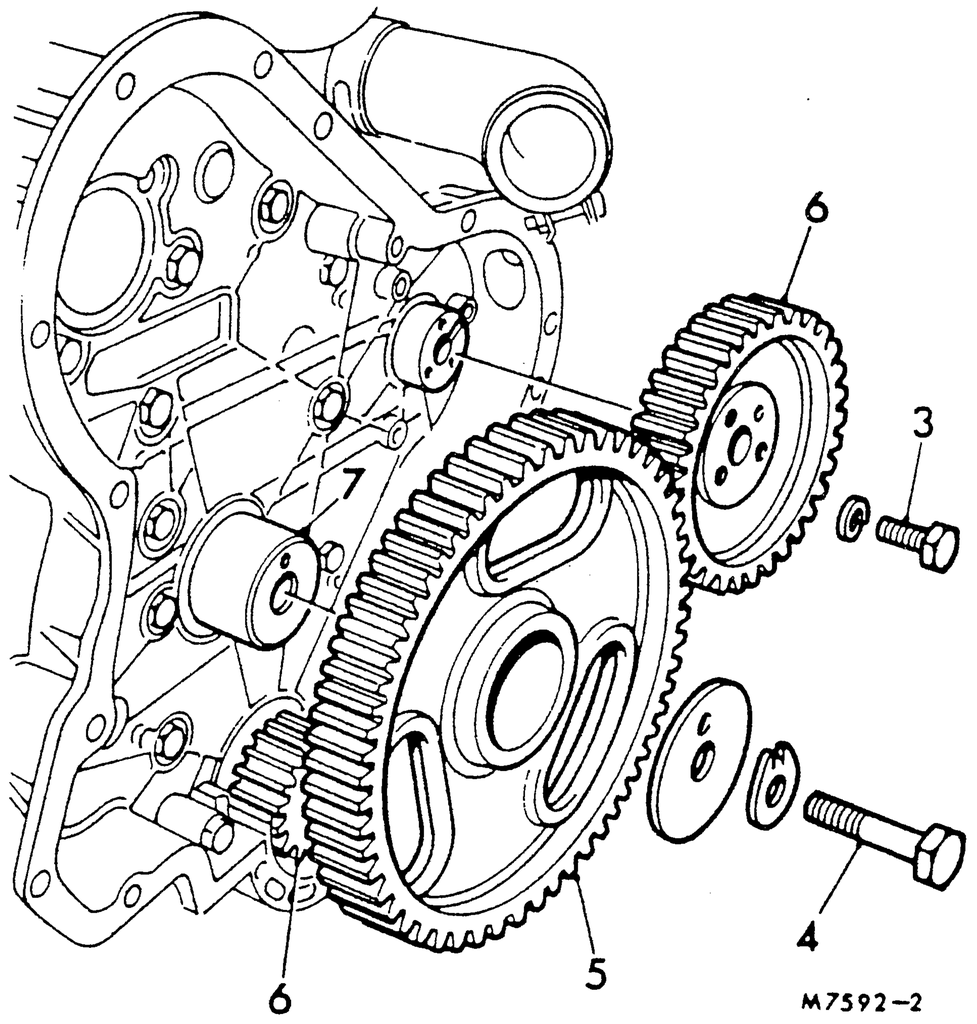

M7592–2

https://tractormanualz.com/

Refitting

9. Reverse procedure in 1 to 6, noting:
   a. Ensure that the timing marks on all gears face forward.
   b. Align the mark 'D' on the camshaft gear with the mark 'D' on the camshaft spigot.
   c. Ensure that all the timing marks align when the idler gear is fitted.
   d. Ensure that the backlash between each pair of gears exceeds the minimum stated in DATA.
   e. Ensure the end-float of the idler gear on its hub is within the limits in DATA.
   f. Tighten the camshaft gear setscrews and idler gear retaining setscrew to the torque figures in DATA.

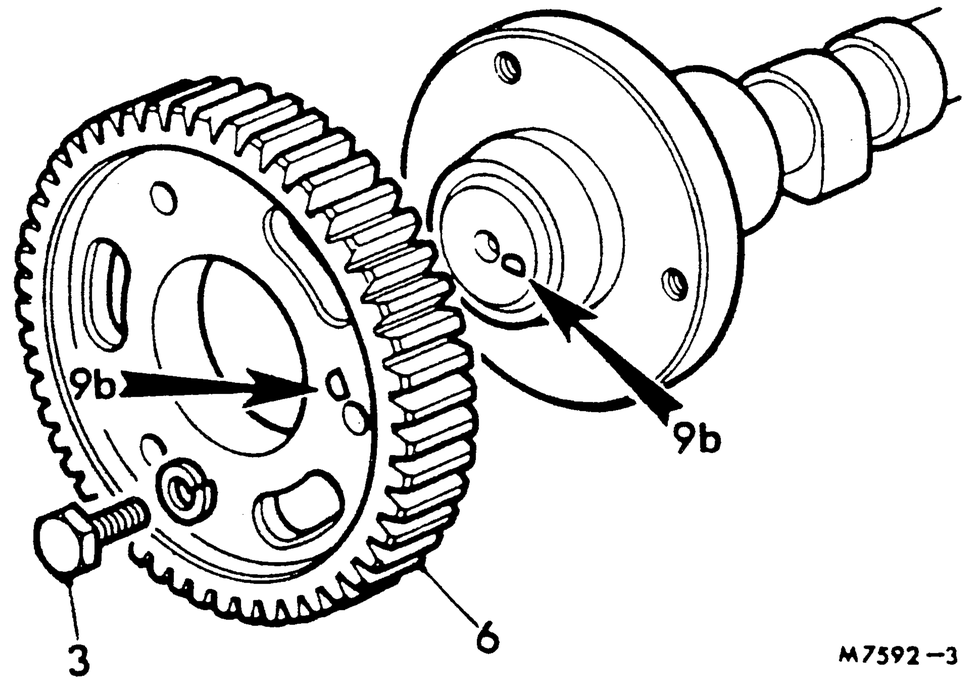

M7592—3

DATA

Camshaft gear	
No. of teeth	50
Bore diameter	50,79 to 50,83 mm (1.9995 to 2.0010 in)
Clearance fit of gear on spigot	0,00 to 0,06 mm (0.0000 to 0.0025 in)
Idler gear and hub	
No. of teeth	90
Bore diameter	53,98 to 54,02 mm (2.1250 to 2.1266 in)
Hub diameter	53,92 to 53,94 mm (2.1230 to 2.1238 in)
Gear end-float on hub	0,13 to 0,38 mm (0.005 to 0.015 in)
Crankshaft gear	
No. of teeth	25
Bore diameter	38,09 to 38,13 mm (1.4995 to 1.5010 in)
Crankshaft spigot diameter	38,10 to 38,11 mm (1.5000 to 1.5005 in)
Fit of gear on crankshaft	0,03 mm (0.001 in) clearance to 0,03 mm (0.001 in) interference
Fuel pump gear	
No. of teeth	50
Bore diameter	44,45 to 44,48 mm (1.750 to 1.751 in)
Pump spigot diameter	44,40 to 44,42 mm (1.7480 to 1.7488 in)
Timing gear backlash	
All gears	0,08 mm (0.003 in) minimum

Torque tightening figures	**Nm**	**kgf m**	**lbf ft**
Camshaft gear setscrews	28	2,9	21
Idler gear retaining setscrew	68	6,9	50

https://tractormanualz.com/

TIMING GEAR CASE GASKET

— Remove and refit TB12.65.25

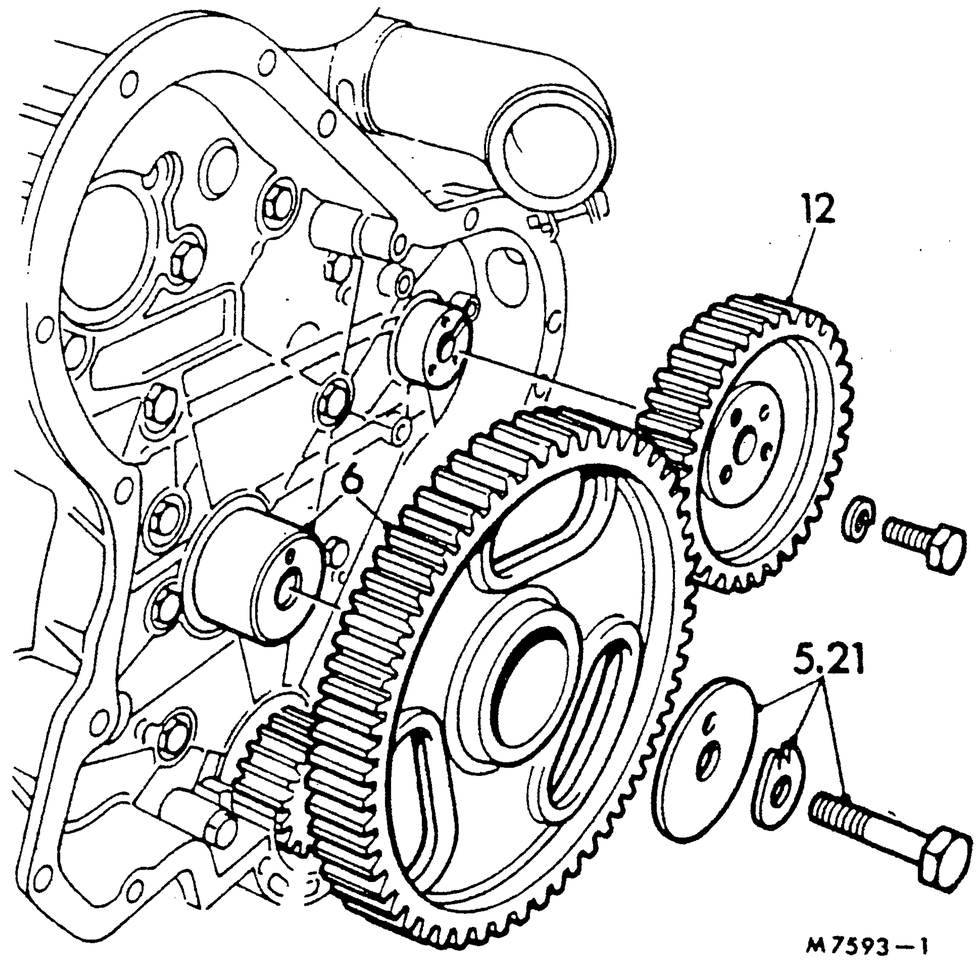

Removing

1. Remove rocker shaft. TB12.29.54.
2. Remove fuel lift pump. TB19.45.09.
3. Remove timing cover. TB12.65.01.
4. Remove camshaft. TB12.13.01.
5. Bend back lock washer tab and remove setscrew lock washer and idler gear retaining plate.
6. Remove idler gear and withdraw hub from timing case.
7. Remove alternator and bracket.
8. Remove the two studs securing sump to timing case.
9. Disconnect all fuel pipes and controls from the injection pump, as in removing the injection pump, but do not release the injection pump from the timing case or remove the drive gear, see TB19.30.10.
10. Remove thermostat housing complete with fuel filter.
11. Remove setscrews and washers and tap timing case from cylinder block complete with injection pump.
12. Remove injection pump drive gear.
13. Remove injection pump from casing, noting position of timing marks on pump flange and casing.

continued

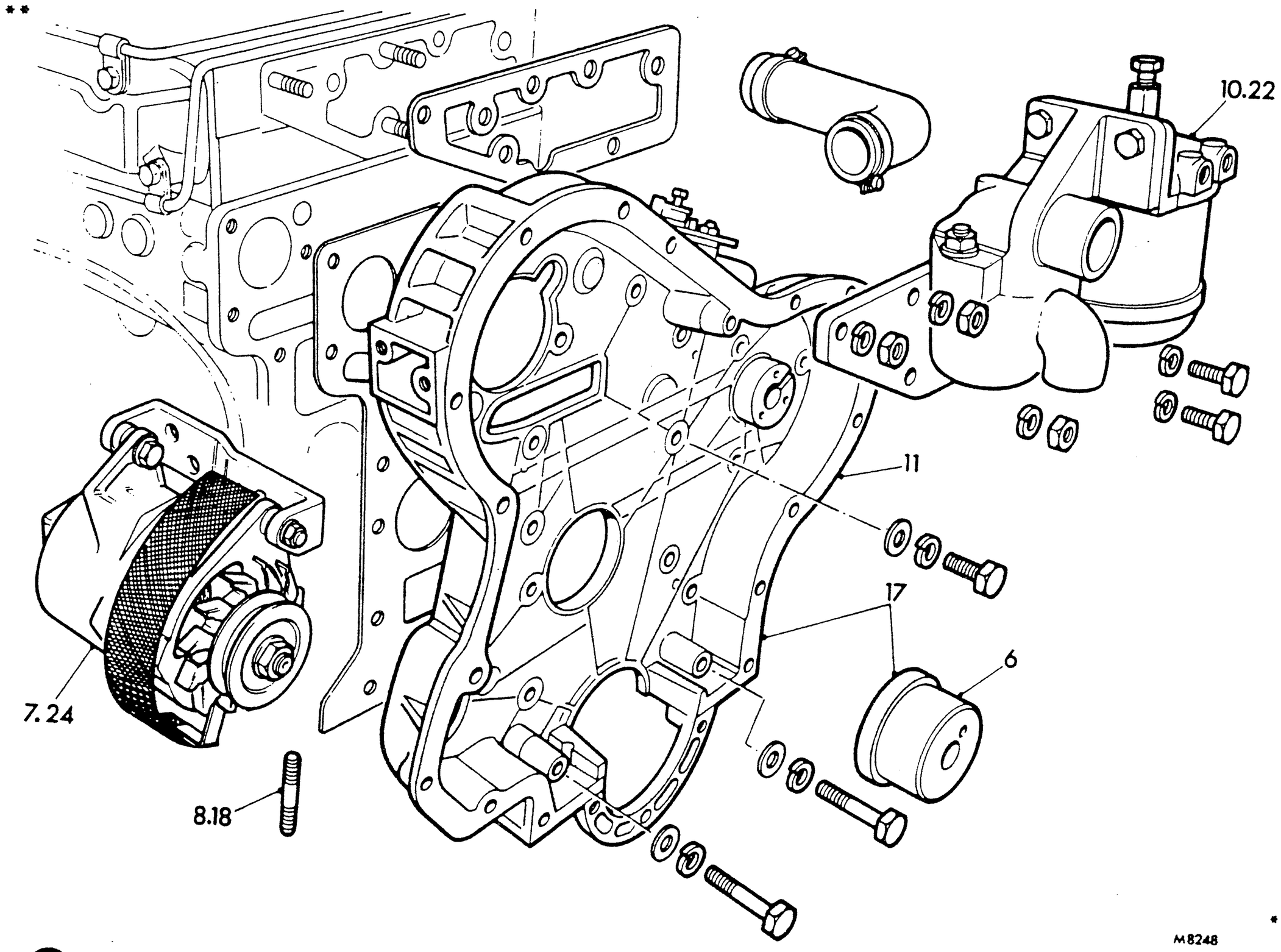

https://tractormanualz.com/

Refitting

14. Clean joint faces and remove any burrs.
15. Refit injection pump to casing, aligning the timing marks on the pump flange and casing.
16. Refit injection pump drive gear.
17. Position gear case using new gaskets, refit the idler gear hub and fit setscrews finger-tight.
18. Refit the two sump studs to casing.
19. Tighten all the timing case setscrews.
20. Refit nuts to studs and tighten.
21. Refit idler gear, aligning timing marks on crankshaft gear, injection pump gear and idler gear, secure with retaining plate, lock washer and setscrew tightening the setscrew to the torque in DATA before locking in position.
22. Refit thermostat housing complete with filter, using a new gasket.
23. Refit fuel pipes and control cables to injection pump, see TB19.30.10.
    NOTE: If required check the injection pump timing.
24. Refit alternator, bracket and adjusting strut.
25. Refit camshaft. TB12.13.01.
26. Refit timing cover. TB12.65.01.
27. Refit fuel lift pump. TB19.45.09.
28. Refit rocker shaft. TB12.29.54.

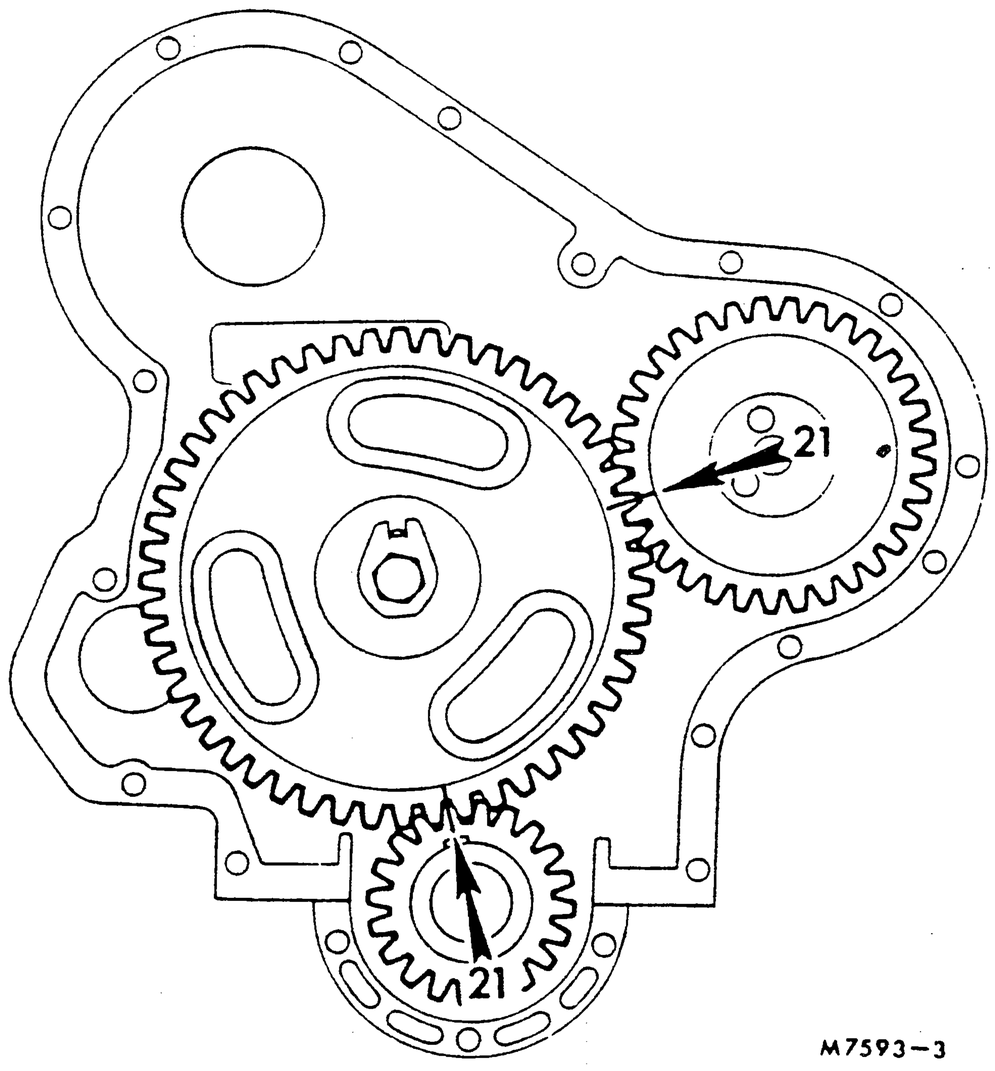

M7593–3

DATA

Torque tightening figures	Nm	kgf m	lbf ft
Idler gear retaining setscrew	68	6,9	50

https://tractormanualz.com/

LIST OF OPERATIONS

Camshaft
- — remove and refit TB12.13.01
- — tappets — remove and refit TB12.13.06

Connecting rods and pistons
- — big-end bearings — remove and refit TB12.17.16
- — piston — remove and refit TB12.17.03
  - gudgeon pin bush — additional work
- — piston rings — remove and refit TB12.17.04
- — remove and refit TB12.17.01
  - cylinder liner — additional work

Crankshaft
- — balancer — overhaul TB12.21.07
- — balancer — remove and refit TB12.21.06
- — front oil seal — remove and refit TB12.21.14
- — main bearings and thrust washers — remove and refit TB12.21.39
- — rear oil seal — remove and refit TB12.21.20
- — remove and refit TB12.21.33

Cylinder block
- — cylinder pressures — check TB12.25.01
- — engine side cover or gasket — remove and refit TB12.25.14

Cylinder head
- — decarbonize and valve grind TB12.29.19
  - valve guide — inlet — additional work
  - valve guide — exhaust — additional work
  - valve seat insert — additional work
- — gasket — remove and refit TB12.29.11
- — injector sleeve — remove and refit TB12.29.33
- — rocker shaft assembly — overhaul TB12.29.55
- — rocker shaft assembly — remove and refit TB12.29.54
- — valve clearances — check and adjust TB12.29.48

Engine assembly — remove and refit TB12.41.01

Engine — tune TB12.49.01

Flywheel
- — spigot bearing — remove and refit TB12.53.20
- — starter ring gear — remove and refit TB12.53.19

Lubrication system
- — oil filter element — remove, clean and refit TB12.60.02
- — oil pressure relief valve — main — remove and refit TB12.60.56
- — oil pressure relief valve — rocker shaft — remove and refit TB12.60.57
- — oil pump — overhaul TB12.60.32
- — oil pump — remove and refit TB12.60.26
- — oil sump — remove, clean and refit TB12.60.44

Timing covers, gears, gear plates, chains, tensioners and guides
- — timing gear case gasket — remove and refit TB12.65.25
- — timing gear cover — remove and refit TB12.65.01
- — timing gears — set — remove and refit TB12.65.20

https://tractormanualz.com/

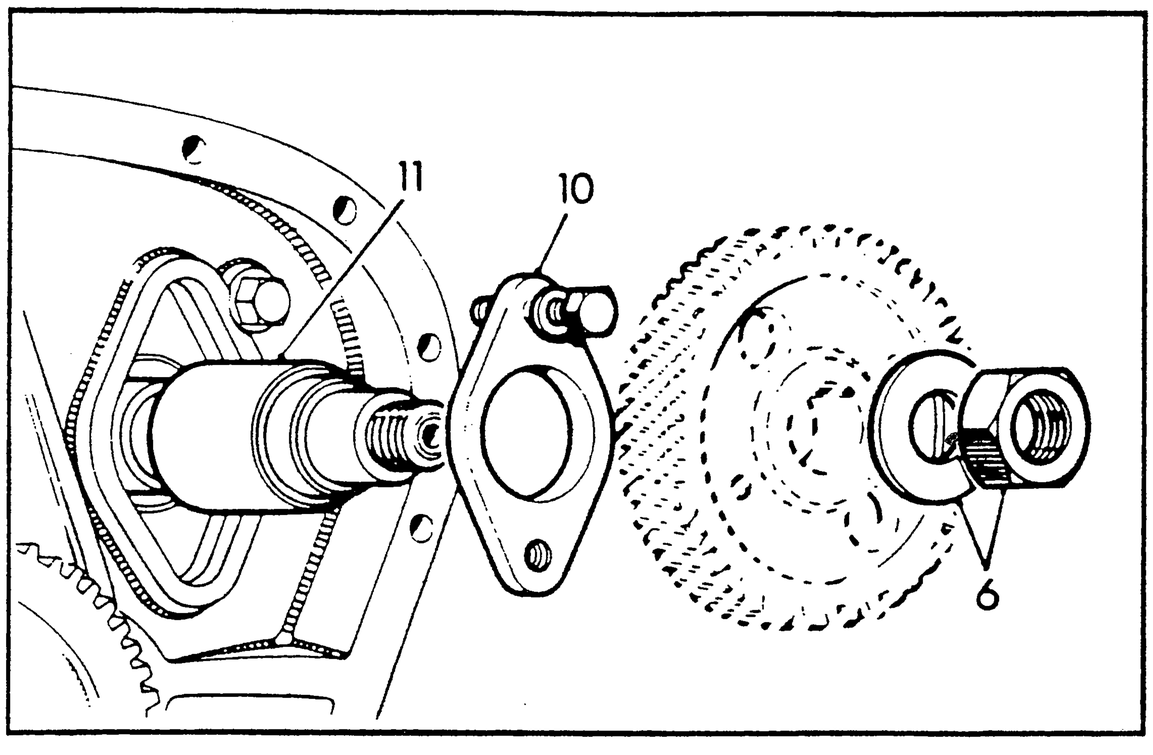

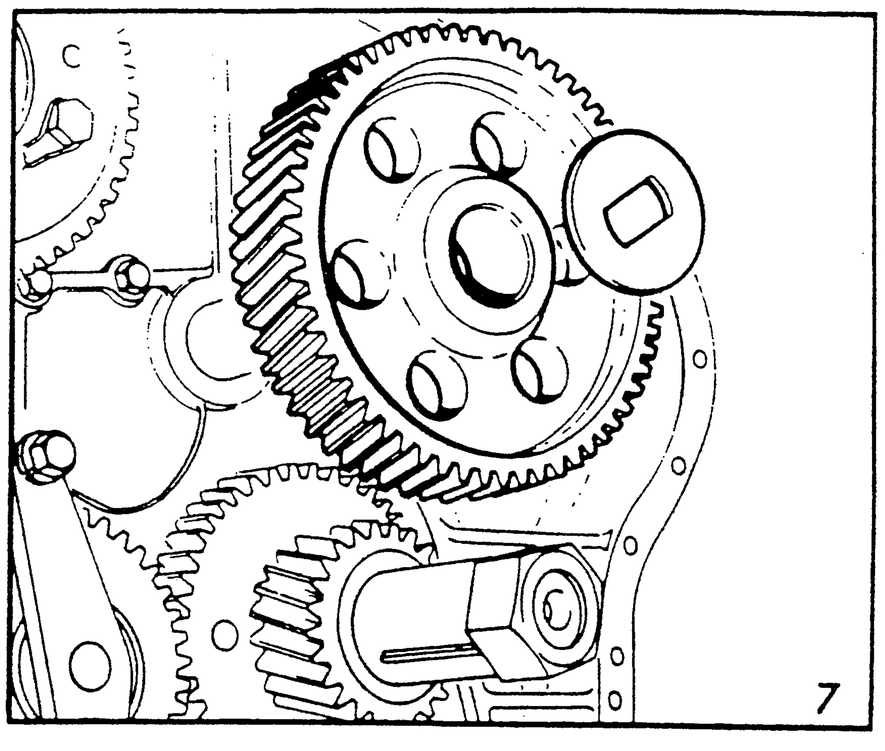

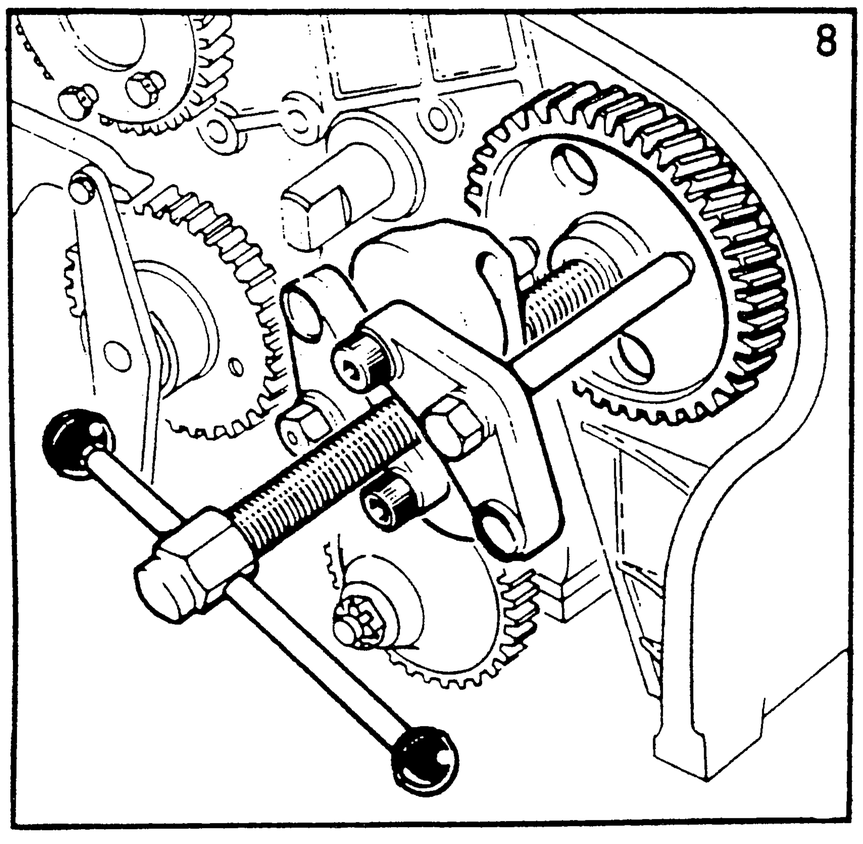

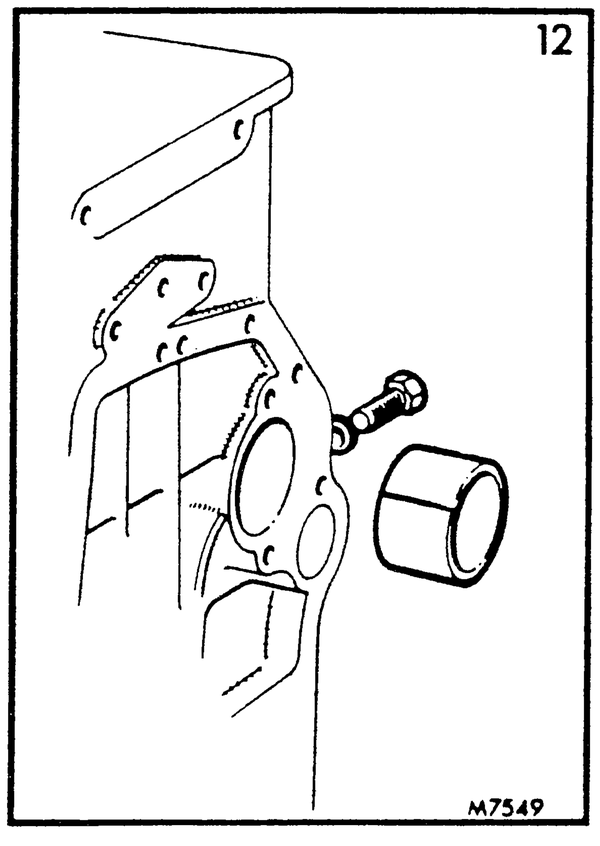

CAMSHAFT

— Remove and refit TB12.13.01

Service tools: 18G 231, 18G 231 C

Removing

1. Remove injectors. TB19.60.01.
2. Remove tappets. TB12.13.06.
3. Remove timing gear cover. TB12.65.01.
4. Remove overflow bottle and pipe clip.
5. Remove air filter support frame.
6. Remove camshaft nut (or bolt) and tab washer.
7. Remove thrust washer and idler gear.
8. Draw off camshaft gear using tools 18G 231 and 18G 231 C and remove key.
9. Remove fuel lift pump. TB19.45.09.
10. Remove camshaft thrust plate.
11. Rotate camshaft as it is withdrawn.
12. Examine front bush for wear; if required, remove locating screw, washer and bush.

continued

https://tractormanualz.com/

Refitting

13. Fit new front bush if removed, aligning holes of bush and locating screw, then refit screw and washer.
14. Lubricate camshaft with engine oil and rotate while inserting.
15. Lubricate and fit thrust plate.
16. Fit key and tap gear onto camshaft; fit tab washer and nut (or bolt).
17. Rotate crankshaft, camshaft and injection pump drive to align timing marks and fit idler gear ensuring double timing mark on idler gear aligns with crankshaft timing mark. Check that all timing marks align and fit thrust washer with its grooved side toward gear.
18. Tighten camshaft nut; if bolt is fitted tighten to torque in DATA.
19. Check camshaft end-float using a dial gauge; renew thrust plate if end-float is greater than specified in DATA.
20. Refit air filter support frame.
21. Refit overflow bottle and pipe clip.
22. Refit timing cover. TB12.65.01.
23. Refit fuel lift pump. TB19.45.09.
24. Refit tappets. TB12.13.06.
25. Refit injectors. TB19.60.01.

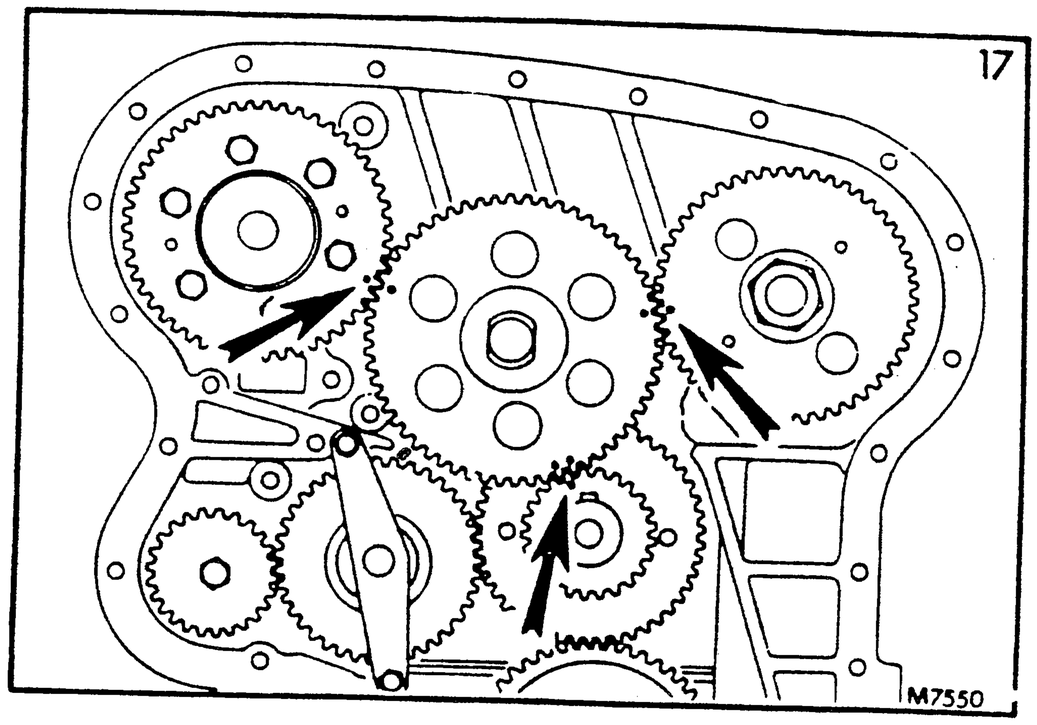

DATA

Camshaft

Journal diameters:	No. 1	50,72 to 50,74 mm (1.997 to 1.998 in)
	Remainder	45,52 to 47,54 mm (1.871 to 1.872 in)
Bearing clearance:	No. 1	0,04 to 0,10 mm (0.0015 to 0.004 in)
	Remainder	0,07 to 0,12 mm (0.0027 to 0.0047 in)
End-float		0,05 to 0,30 mm (0.002 to 0.012 in)
End-float adjustment		Renew thrust plate
Thrust plate thickness		7,14 to 7,24 mm (0.281 to 0.285 in)

Torque tightening figures	Nm	kgf m	lbf ft
Camshaft gear securing bolt (when fitted)	115	11,8	85

TAPPETS

—Remove and refit TB12.13.06

Removing

1. Remove engine side cover. TB12.25.14.
2. Remove rocker shaft. TB12.29.54.
3. Remove push-rods.
4. Rotate engine as required and lift out tappets.

Refitting

5. Reverse procedure in 1 to 4.

DATA

Tappets

Diameter	28,537 to 28,556 mm (1.1235 to 1.1242 in)
Clearance in guide	0,013 to 0,058 mm (0.0005 to 0.0023 in)

https://tractormanualz.com/

CONNECTING RODS AND PISTONS

—Remove and refit **TB12.17.01**

Service tools: 18G 55 A (or 38 U 3), 18G 227 C, 18G 227 E

Removing

1. Remove cylinder head. TB12.29.11.
2. Remove sump. TB12.60.44.
3. Withdraw dipstick.
4. If required, remove oil pipe between oil pump and crankshaft balancer.
5. Check identification marks on piston crown faces, connecting rods and big-end caps.
6. Remove big-end bolts.
7. Withdraw big-end caps.
8. Remove bearing shells from connecting rods.
9. Remove pistons and connecting rods upwards from cylinder block.
10. Temporarily reassemble components until they are refitted.

Inspection

11. Inspect liners for scoring, wear, damage and coolant leaks; renew as required. TB12.17.01/04.

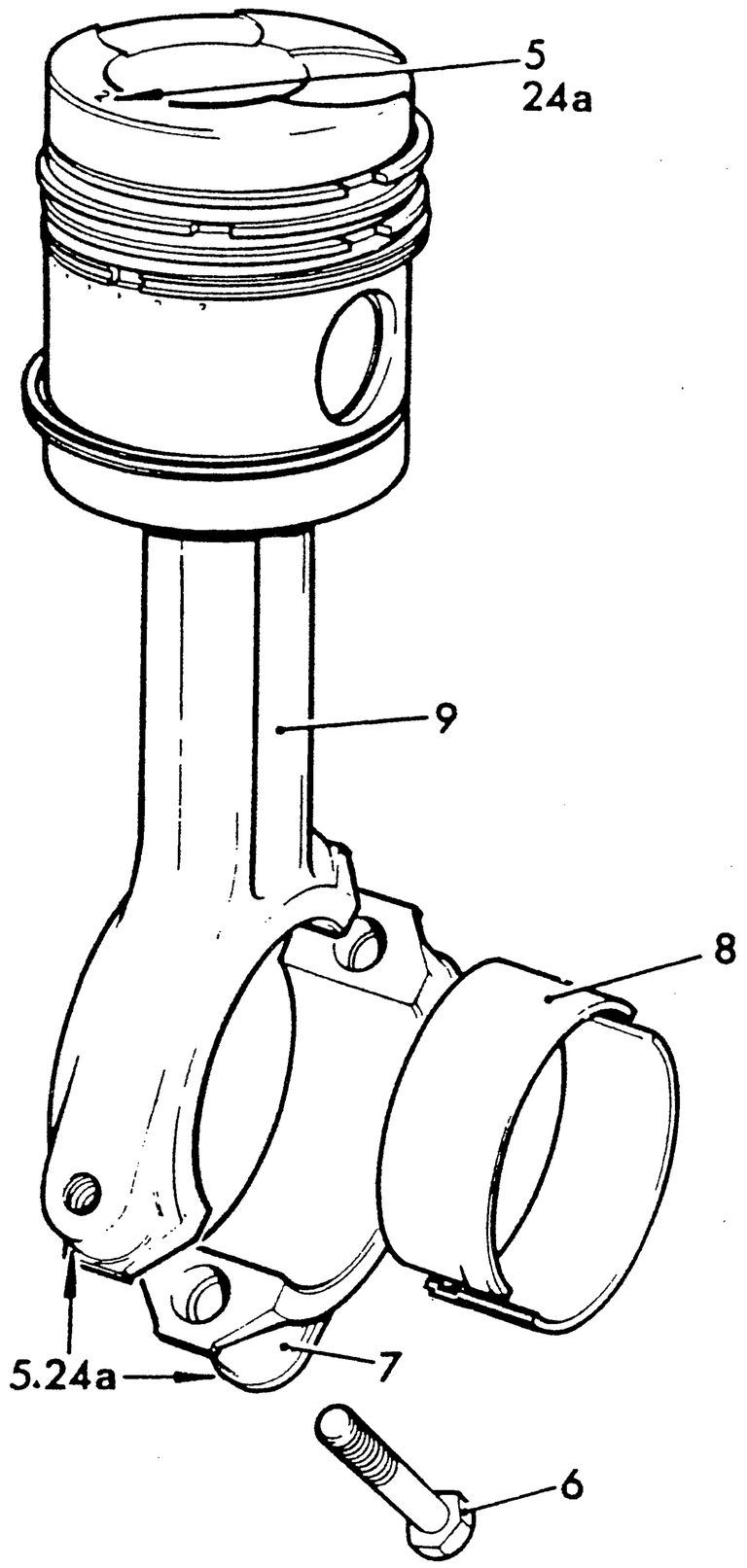

M6125-1

Cylinder liners — additional work **TB12.17.01/04**

12. Withdraw liner from cylinder block, using tool 18G 227 C and 18G 227 E.

continued

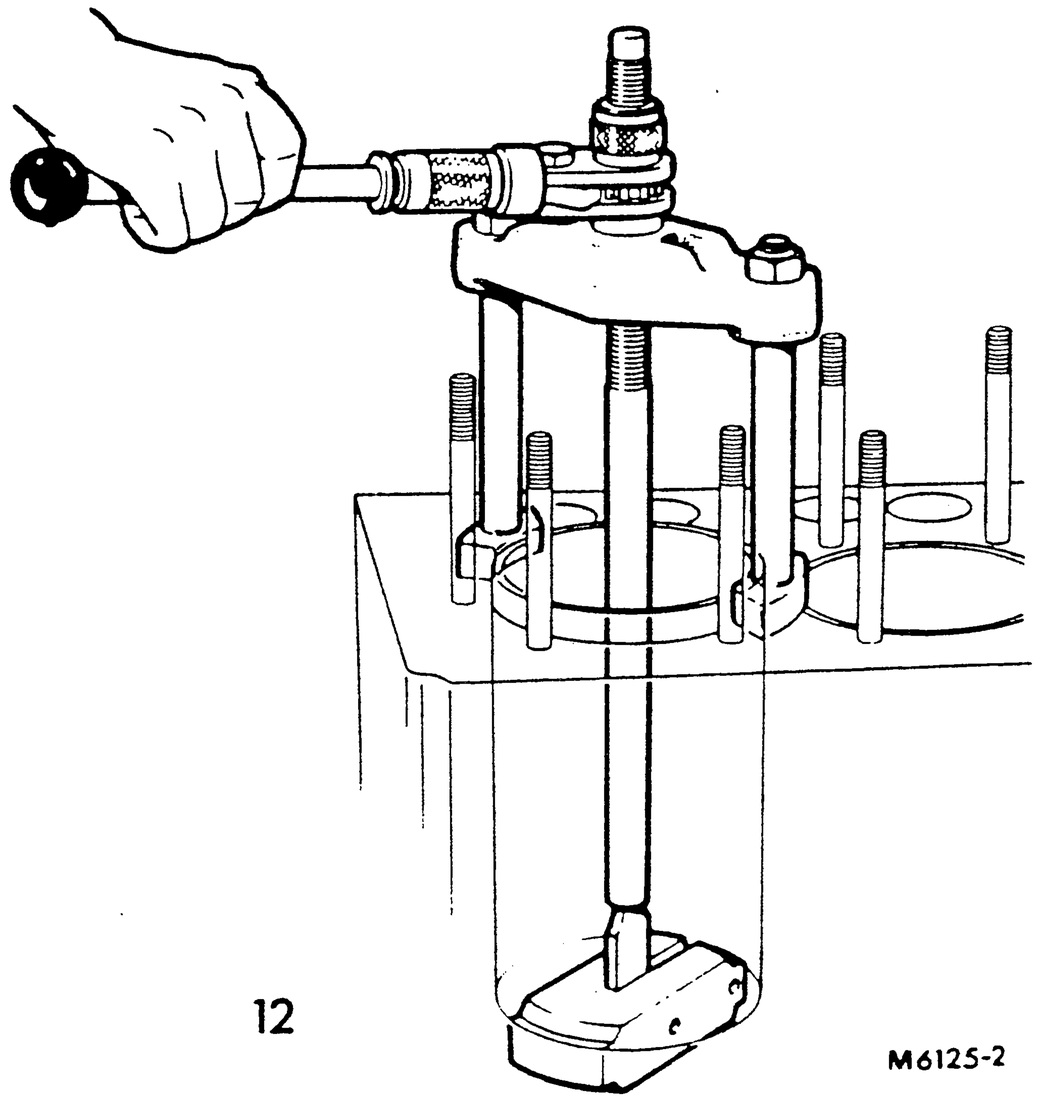

M6125-2

https://tractormanualz.com/

13. Remove seals and shim(s) (if fitted) from cylinder block.
14. Clean block bores, seal grooves and liner.

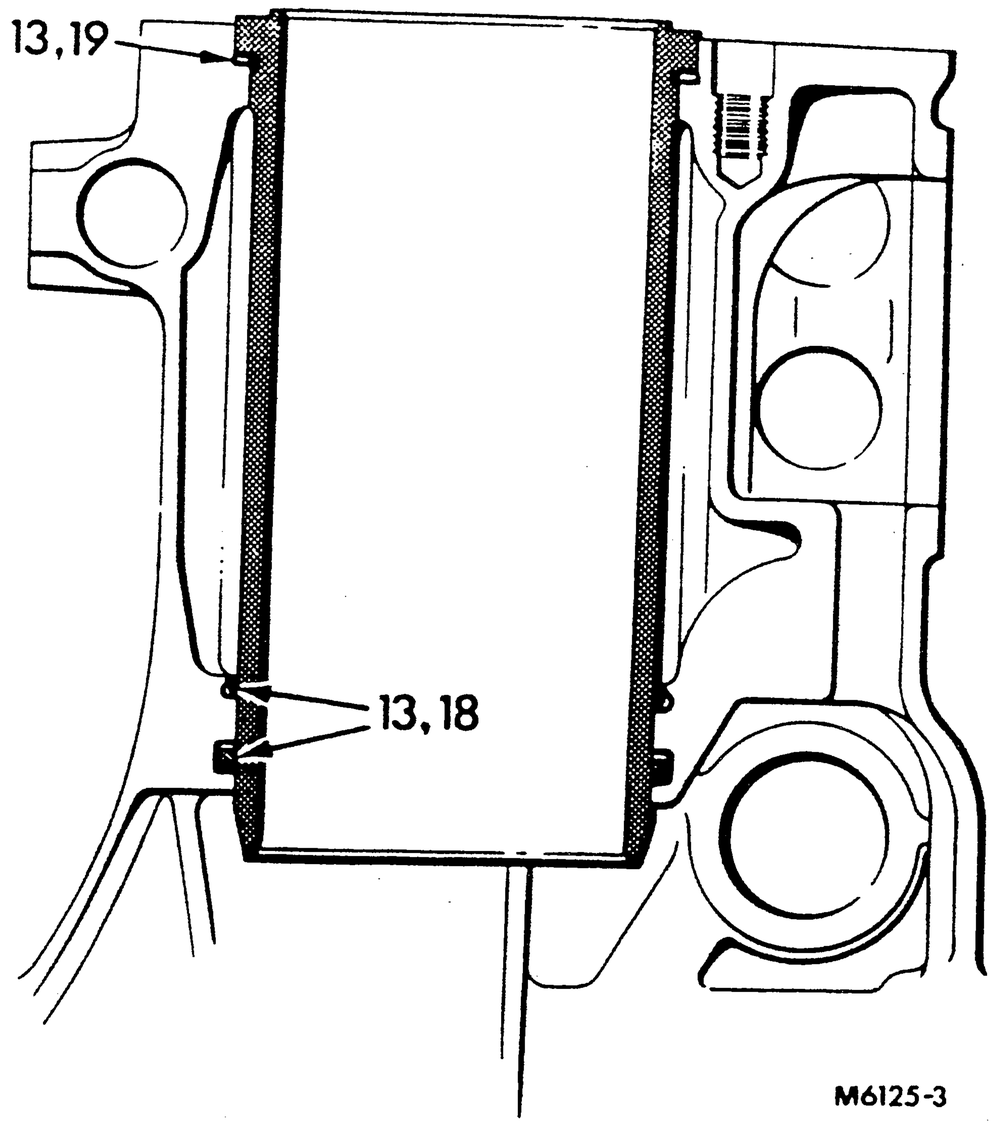

15. Fit liner without seals or shims and secure with clamp.
16. Measure liner standing height and note figure.
17. Remove clamp and withdraw liner.
18. Fit new seals to cylinder block.
19. Fit shims (if required) to adjust standing height of liner to figure in DATA.
20. Fit liner, clamp in position and check standing height.
21. Remove clamp.

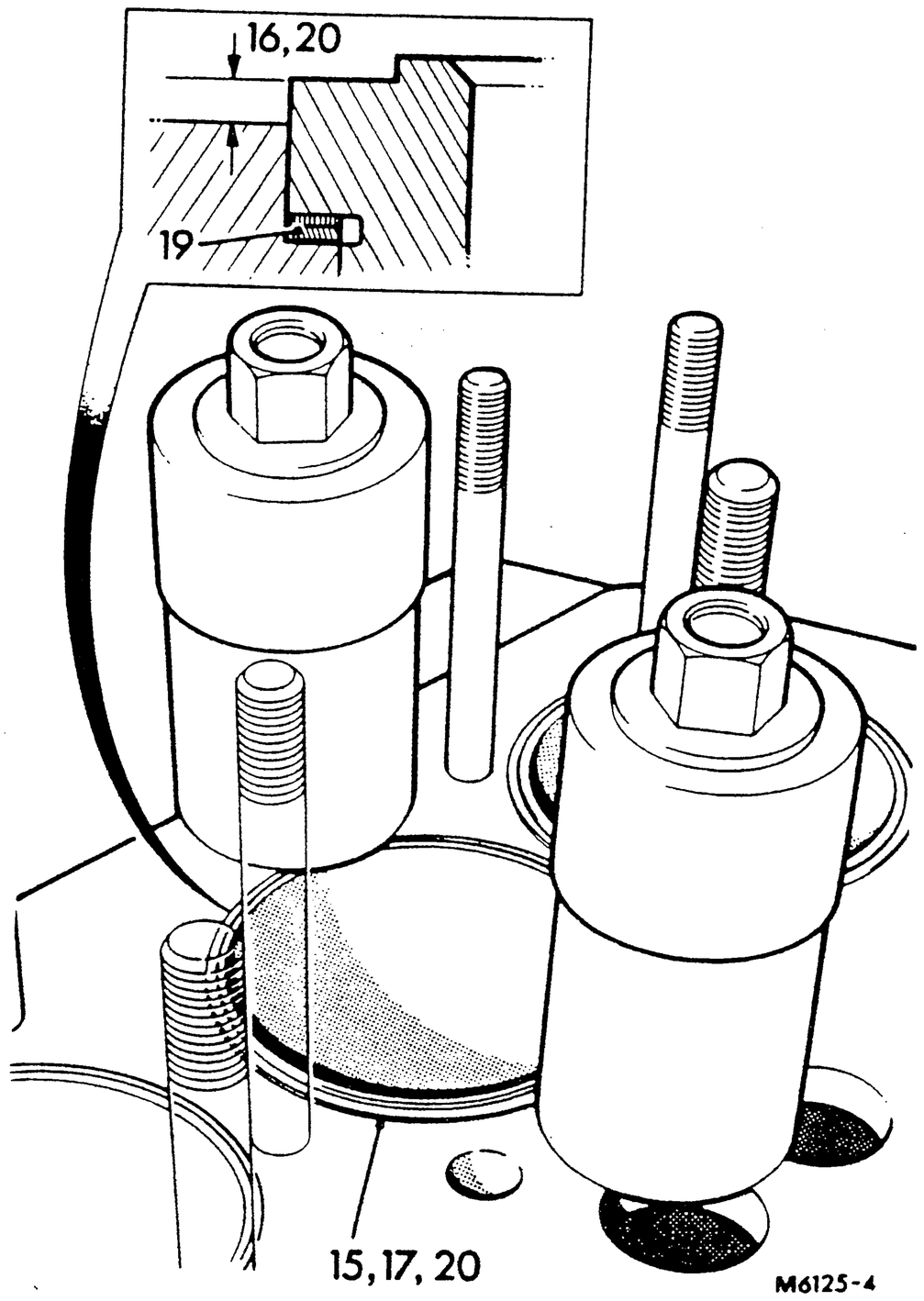

https://tractormanualz.com/

Refitting

22. Clean carbon from top of cylinder liner and piston.
23. Clean liner bore, crankpin and connecting rod/piston components and lubricate with clean engine oil.
24. Fit pistons and connecting rods to their original bores by reversing procedure in 5 to 9, noting:
    a. Ensure identification numbers on piston crown faces, connecting rods and big-end caps are toward right-hand side (inlet manifold side) of engine (valve recesses in piston crowns toward exhaust manifold).
    b. Use tool 18G 55 A (or 38 U 3) to compress piston rings.
    c. Ensure bearing shells are maintained clean and that no dirt is trapped behind them.
    d. Locate bearing shells in original positions.
    ** e. Lubricate threads with clean engine oil and tighten the big-end bolts to torque in DATA.**
    f. Check that big-end bearings have end-float on crankpin.
25. Refit oil pipe, if removed.
26. Fit sump. TB12.60.44.
27. Replace dipstick.
28. Fit cylinder head. TB12.29.11.

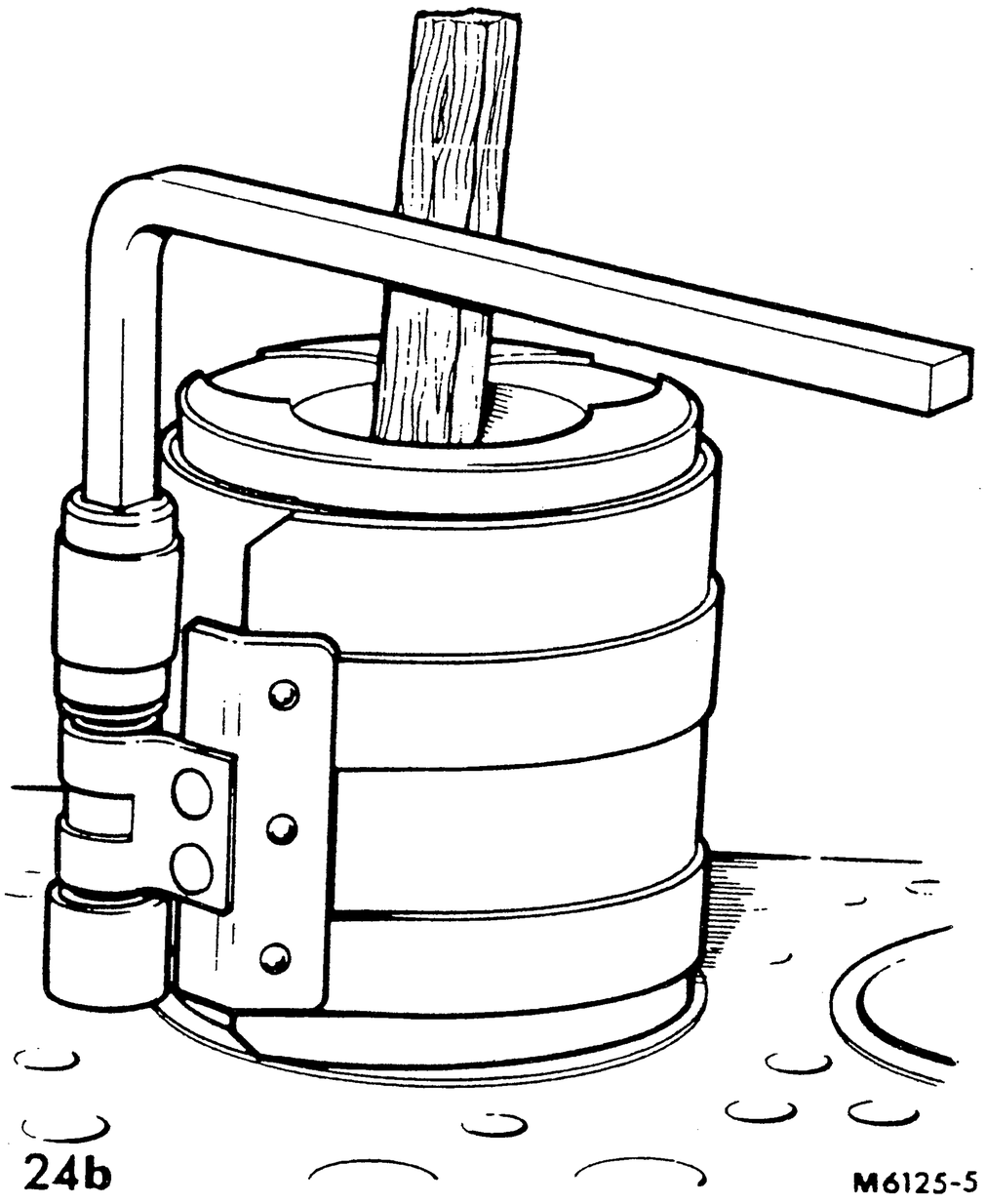

24b M6125-5

DATA

Piston

Piston crown height (at T.D.C.) from cylinder block top face	0,30 to 0,61 mm (0.012 to 0.024 in)

Cylinder liner

Maximum bore diameter	98,17 mm (3.865 in)
Maximum bore taper (over ring pack travel)	0,10 mm (0.004 in)
Maximum bore ovality (over ring pack travel)	0,05 mm (0.002 in)
** Standing height	0,076 to 0,15 mm (0.003 to 0.006 in)

NOTE: The difference in standing height of adjacent liners must not exceed 0,05 mm (0.002 in)**

Shim thicknesses available	0,076	0,10	0,127 mm (0.003 0.004 0.005 in)

Torque tightening figures	**Nm**	**kgf m**	**lbf ft**
** Big-end bolts (lubricated thread)	82	8,3	60 **

https://tractormanualz.com/

PISTONS AND CONNECTING RODS

—Remove and refit

—Pistons	**TB12.17.03**
—Piston rings	**TB12.17.04**

Service tool: 18G 616

Dismantling

1. Remove connecting rod and piston. TB12.17.01.
2. Remove and discard piston rings.
   NOTE: If possible, immerse piston and connecting rod assemblies in an oil emulsifier for a few hours while carrying out other work.
3. Immerse piston and connecting rod assemblies in hot water and allow to warm,
4. Clamp connecting rod in vice.
5. Remove one of the circlips retaining the gudgeon pin, tap out gudgeon pin and withdraw piston.

Inspection

6. Clean and decarbonise components, ensuring oil holes and piston ring grooves are clear.
7. Check fit of gudgeon pin in bush and piston (see DATA) and ensure bush cannot be rotated in connecting rod (check oil holes in bush and connecting rod align); renew parts as required. TB12.17.03/01.
8. Check connecting rod alignment (see DATA).

** 9. Fit new piston rings and check the groove clearances, see DATA, using feeler gauges.
   Press each ring into the piston groove so that the top face is flush with the outside diameter of the piston before measuring.**

   NOTE: No. 2 and 3 compression rings should have the face marked 'TOP' uppermost.

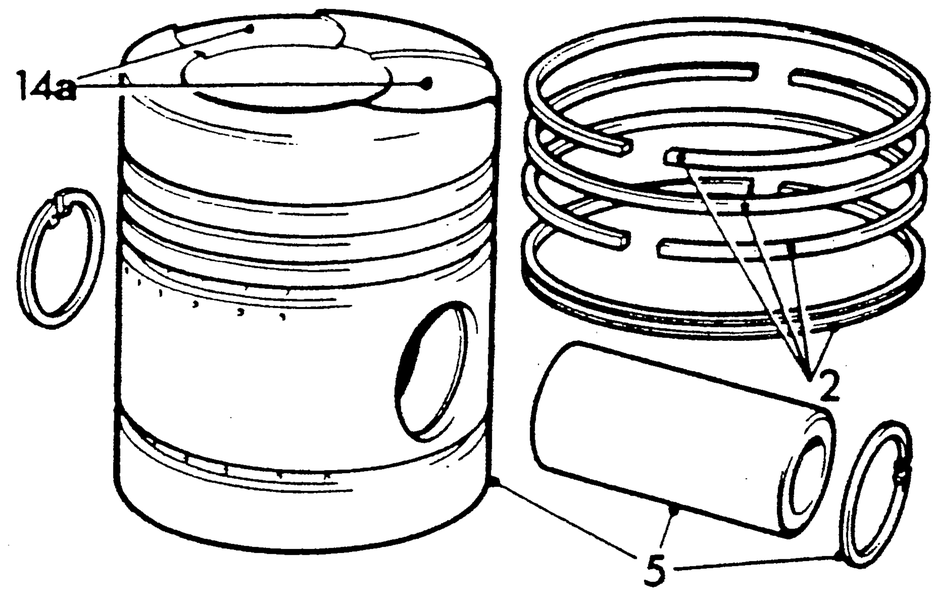

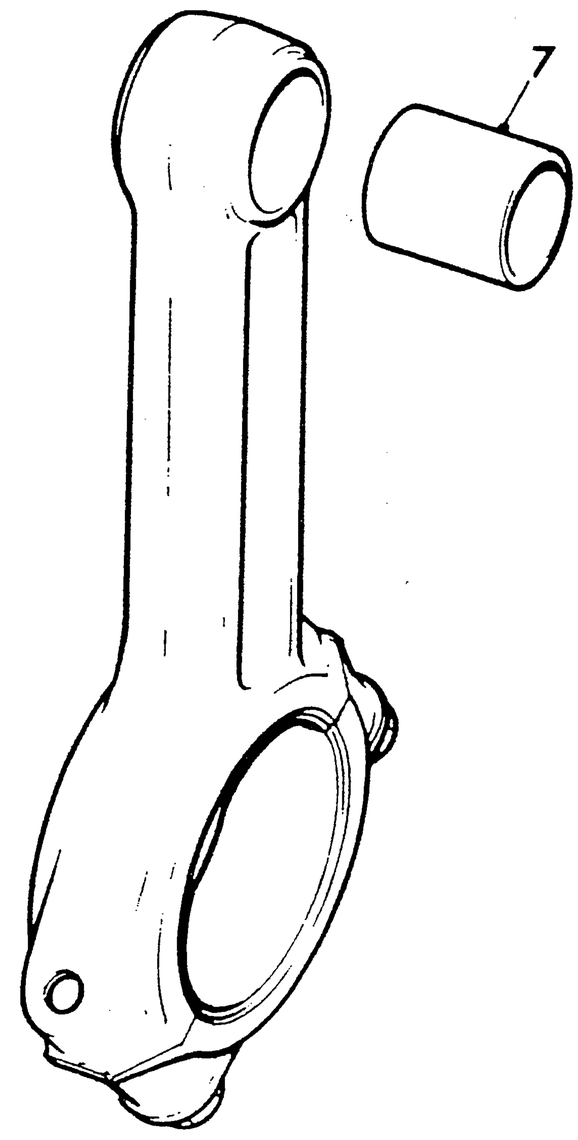

M6156-1

continued

https://tractormanualz.com/

Gudgeon pin bush — additional work **TB12.17.03/01**

** **NOTE:** Later engines with a 36,5 mm (1 7/16 in) diameter gudgeon pin require the connecting rod to be replaced complete if the bush is worn. **

10. Use tool 18G 616 and a press to remove bush from connecting rod.
11. Press in a new bush using tool 18G 616, ensuring oil holes in bush and connecting rod align.

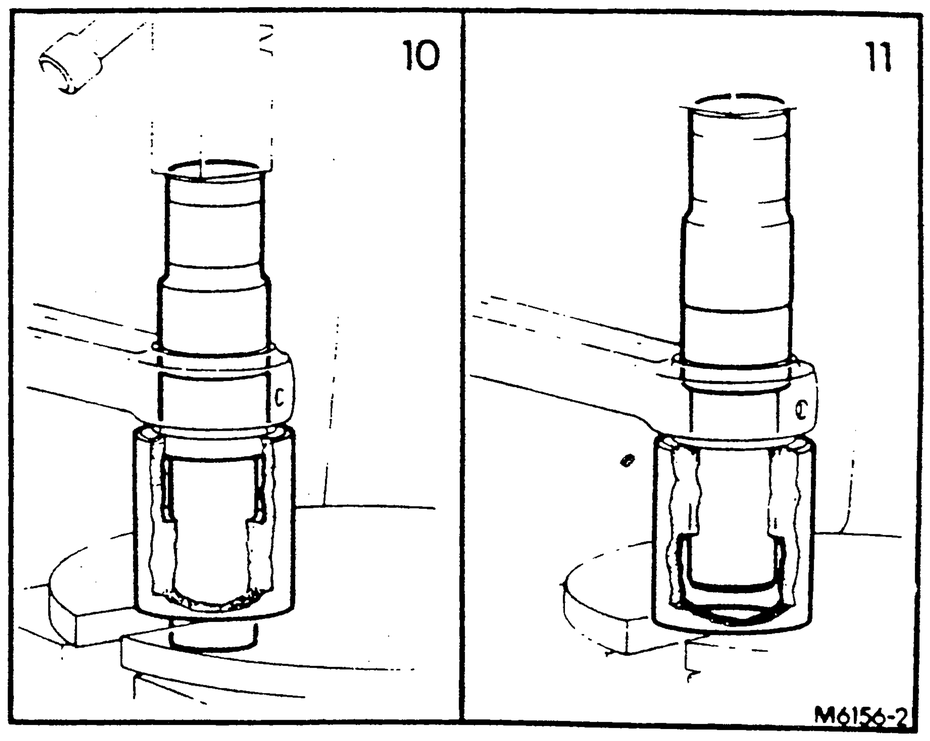

Reassembling

12. Immerse piston in hot water and allow to warm.
13. Grip connecting rod in vice.
14. Remove piston from water, wipe dry, lubricate with engine oil, position on connecting rod and fit gudgeon pin and circlips, noting:
    a. Ensure valve clearance recesses in piston crown are toward cap side of connecting rod.
15. Fit new rings to piston.
16. Refit piston and connecting rod. TB12.17.01.

DATA

****Gudgeon pin — 35 mm (1 3/8 in) nominal diameter****	
Clearance in bush	0,013 to 0,033 mm (0.0005 to 0.0013 in)
Fit in piston	0,005 mm (0.0002 in) interference to 0,006 mm (0.00025 in) clearance
****Gudgeon pin — 36,5 mm (1 7/16 in) nominal diameter**	
Clearance in bush	0,034 to 0,04 mm (0.0013 to 0.0016 in)
Fit in piston	0,0025 mm (0.0001 in) interference to 0.008 mm (0.0003 in) clearance**
Connecting rod alignment	
****Maximum out-of-parallel of big- and little-end bores**	0,04 mm per 100 mm (0.0004 in per inch) over mandrel length
Piston ring/groove clearance — pistons with 35 mm (1 3/8 in) diameter gudgeon pin**	
No. 1 — compression	0,08 to 0,13 mm (0.003 to 0.005 in)
No. 2 and 3 — compression	0,05 to 0,10 mm (0.002 to 0.004 in)
Oil scraper	0,05 to 0,10 mm (0.002 to 0.004 in)
****Piston ring/groove clearance — pistons with 36,5 mm (1 7/16 in) diameter gudgeon pin**	
No. 1 — compression	0,084 to 0,135 mm (0.0033 to 0.0053 in)
No. 2 and 3 — compression	0,056 to 0,107 mm (0.0022 to 0.0042 in)
Oil scraper	0,063 to 0,114 mm (0.0025 to 0.0045 in)**

CONNECTING ROD BIG-END BEARINGS

—Remove and refit **TB12.17.16**

Removing

1. Disconnect battery.
2. Remove sump. TB12.60.44.
3. Withdraw dipstick.
4. Check identification marks on connecting rod and cap.
5. Turn crankpin of bearing to be removed to B.D.C. and remove bolts, cap and bearing shell.
6. Push connecting rod upward into bore and remove upper bearing shell.

continued

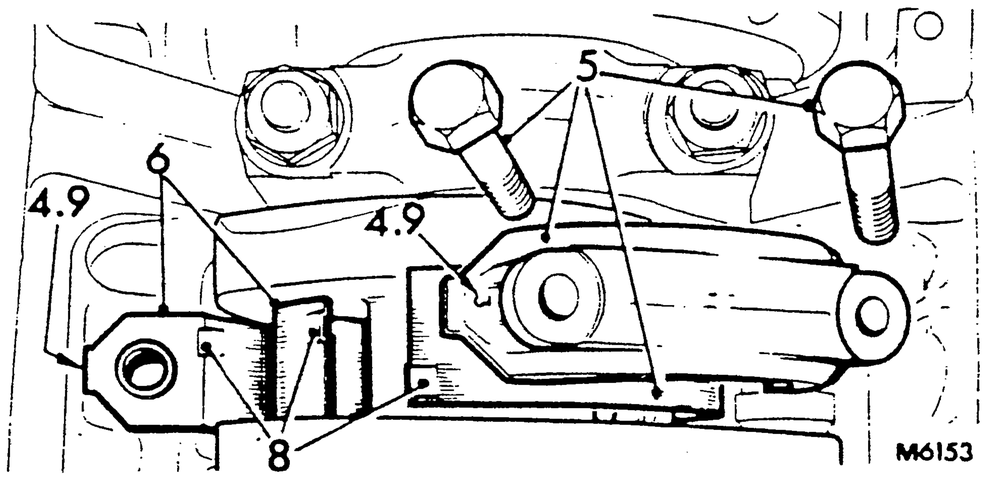

https://tractormanualz.com/

Refitting

7. Clean connecting rod, cap, crankpin and bearing halves.
8. Lubricate and fit half shells to connecting rod and cap, ensuring no dirt is trapped behind them and that the locating tongues are correctly positioned.
** 9. Pull connecting rod down to crankpin and fit cap, ensuring numbers are together and no dirt is trapped between the mating faces; run up bolts, ensuring threads are lubricated with clean engine oil, but do not tighten.**
10. Check connecting rod has end-float on crankpin.
11. Tighten bolts to torque in DATA.
12. Re-check connecting rod has end-float on crankpin.
13. Repeat 4 to 12 for other bearings
14. Refit sump. TB12.60.44.
15. Reconnect battery.

DATA

Torque tightening figures	Nm	kgf m	lbf ft
**Big-end bolts (lubricated threads)	82	8,3	60 **

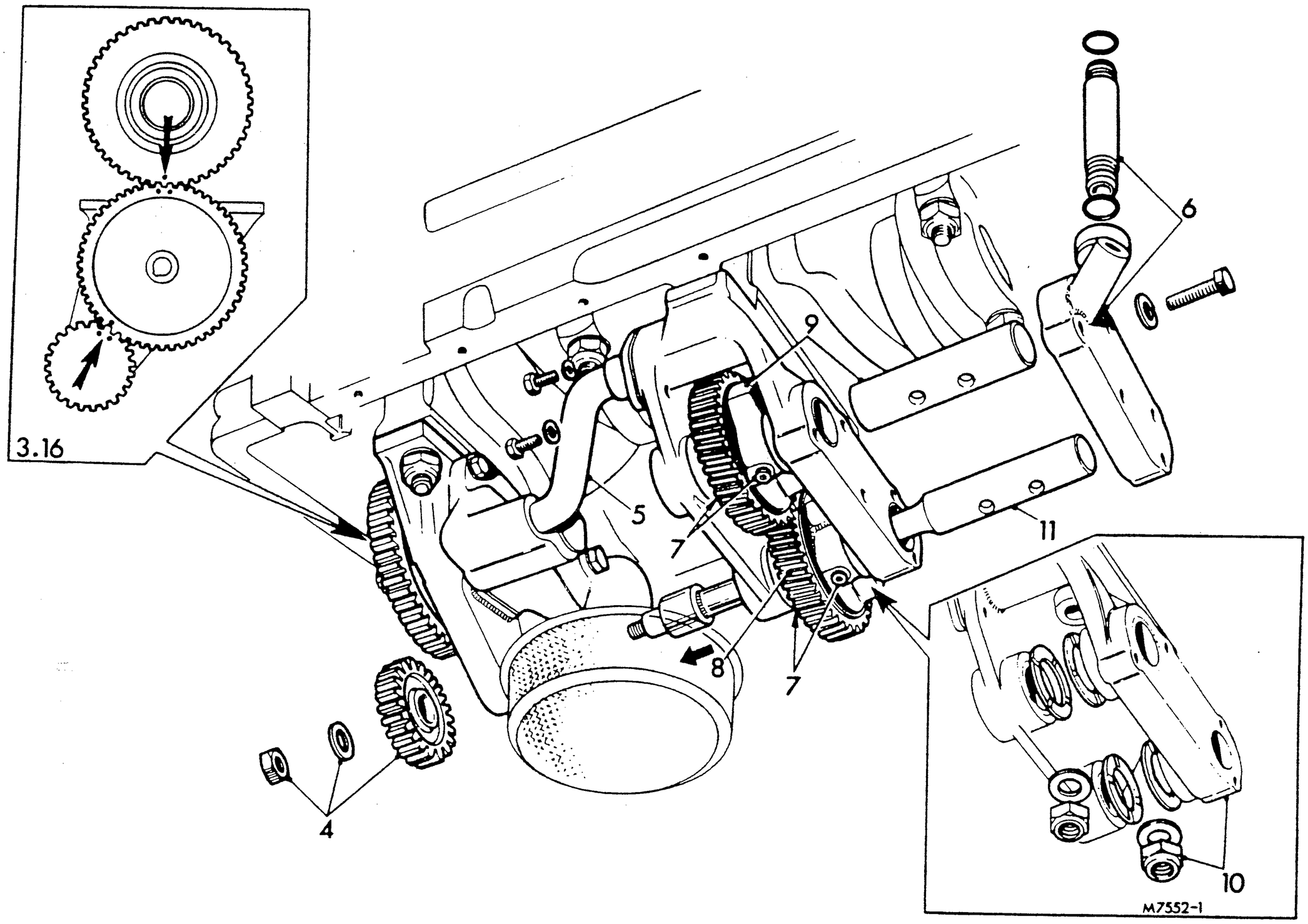

CRANKSHAFT BALANCER

—Remove and refit TB12.21.06

Removing

1. Remove left-hand side panel and disconnect earth lead from battery negative (—) terminal.
2. Drain and remove sump.
3. Turn engine to align timing marks on crankshaft gear, oil pump gear and balancer drive gear.
4. Remove nut and washer and lever off balancer drive gear.
5. Remove the two bolts securing the oil feed pipe to the balancer and pull the pipe from the oil pump.
6. Remove the five setscrews, detach balancer rear cover and withdraw oil pipe.
7. Remove screws securing balancer gears, noting that they are secured with Loctite.
8. Slide drive shaft forward and remove right-hand balance gear and thrust washers.

continued

https://tractormanualz.com/

9. Remove shaft, left-hand balance gear and thrust washers.
10. Remove nuts and withdraw balancer housing, noting:
    a. The mounting studs are also the mounting location for No. 3 main bearing cap.
    b. Shims are fitted between the balancer housing and bearing cap.
11. Withdraw drive shaft from oil pump.

Refitting

12. Insert drive shaft into oil pump.
13. Fit balancer drive housing, noting:
    a. Ensure O-ring seal is serviceable.
    b. The shim pack should be the same thickness as that fitted between the oil pump and No. 1 main bearing cap; fit the original shims if the oil pump has not been removed.
    ** c. Tighten nuts to torque in DATA, ensuring that the latest type of washers are fitted, see Parts List, and that the threads are lubricated with clean engine oil.**
14. Clean balance gears and screws and prepare for locking agent, see DATA.
15. Fit balance gears, thrust washers, shafts and screws, noting:
    a. Clean and lubricate thrust washers and attach them to the gears before fitting the gears to the housings.
    b. Use locking agent, see DATA, on the screws and ensure that they locate correctly in the shafts.
    c. Ensure that the balance gear timing marks align.
16. Fit balancer drive gear, ensuring timing marks on drive gear, oil pump gear and crankshaft gear align, and secure with washer and nut.
17. Clean joint faces, fit balancer rear cover using a new gasket and oil feed pipe using new O-ring seals.
18. Clean joint faces, renew O-ring seal in oil pump and fit oil pipe using a new gasket.
19. Refit sump.
20. Reconnect battery and fit side panel.

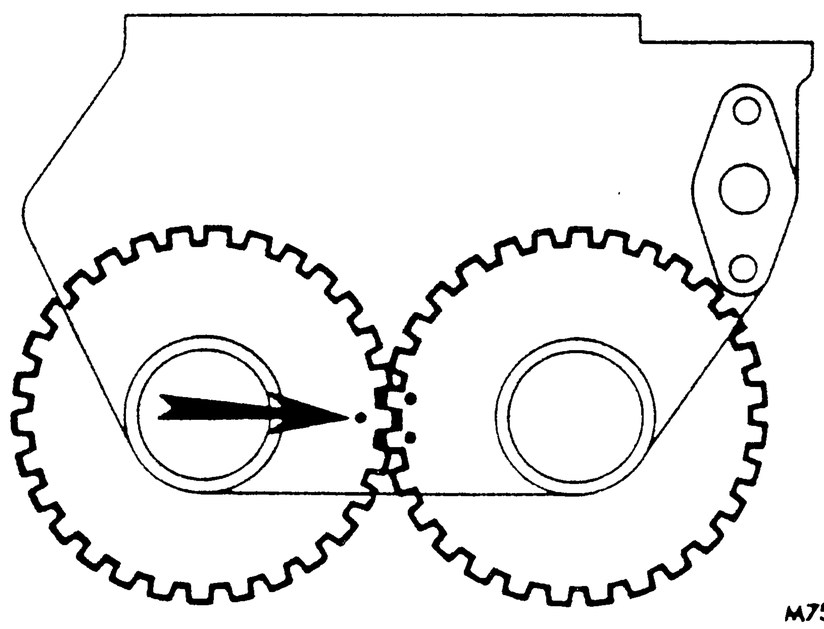

15c M7552-2

DATA

Torque tightening figures	Nm	kgf m	lbf ft
**Main bearing (and balancer) nuts (lubricated thread)	163	16,6	120**

Special lubricants and compounds

Locking agent ..... Loctite Nut Lock, prepare with Loctite Primer

https://tractormanualz.com/

CRANKSHAFT BALANCER

—Overhaul **TB12.21.07**

Service tool: 18G 1186

Dismantling

1. Remove crankshaft balancer. TB12.21.06.
2. Clean all parts, ensuring that the oilways in the shafts are clean.
3. Inspect parts for damage and wear, see DATA, and replace as required, noting:
   a. If required, remove the oil pump. TB12.60.26, and press out the balancer drive shaft bearing.
   b. Press bushes out of balancer housing using tool 18G 1186, from the inside face, as shown.

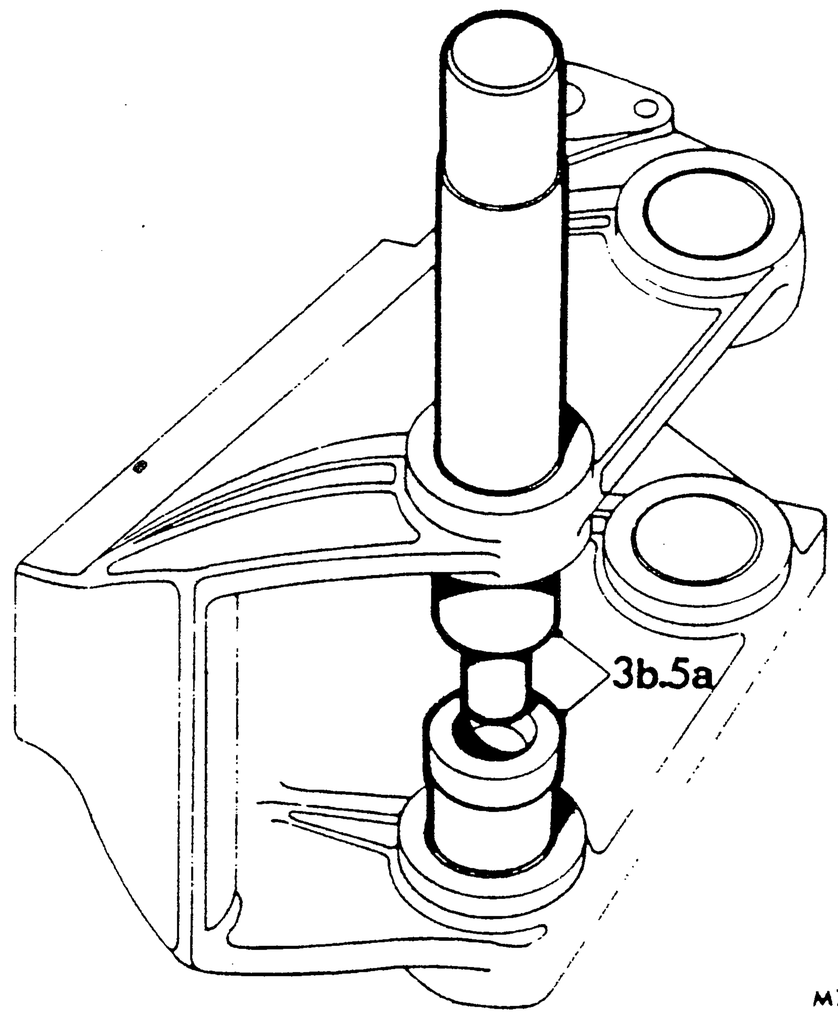

M7553

Reassembling

4. Press new bush into oil pump if removed, and refit oil pump. TB12.60.26.
5. Press new bushes into balancer housing using tool 18G 1186, noting:
   a. Press in bushes from inside face of housing, as shown.
   b. Ensure ends of bushes are flush with inside faces of housing.
6. Fit a new O-ring to the housing and refit the crankshaft balancer. TB12.21.06.

DATA

Crankshaft balancer

Shaft diameter (through housing bushes)	28,503 to 28,534 mm (1.1222 to 1.1234 in)
Shaft clearance in housing bushes	0,066 to 0,152 mm (0.0026 to 0.006 in)
Thrust washer thickness	1,98 to 2,03 mm (0.078 to 0.080 in)
Balance gear backlash	0,05 to 0,15 mm (0.002 to 0.006 in)

https://tractormanualz.com/

CRANKSHAFT FRONT OIL SEAL

—Remove and refit TB12.21.14

Service tool: 18G 1111

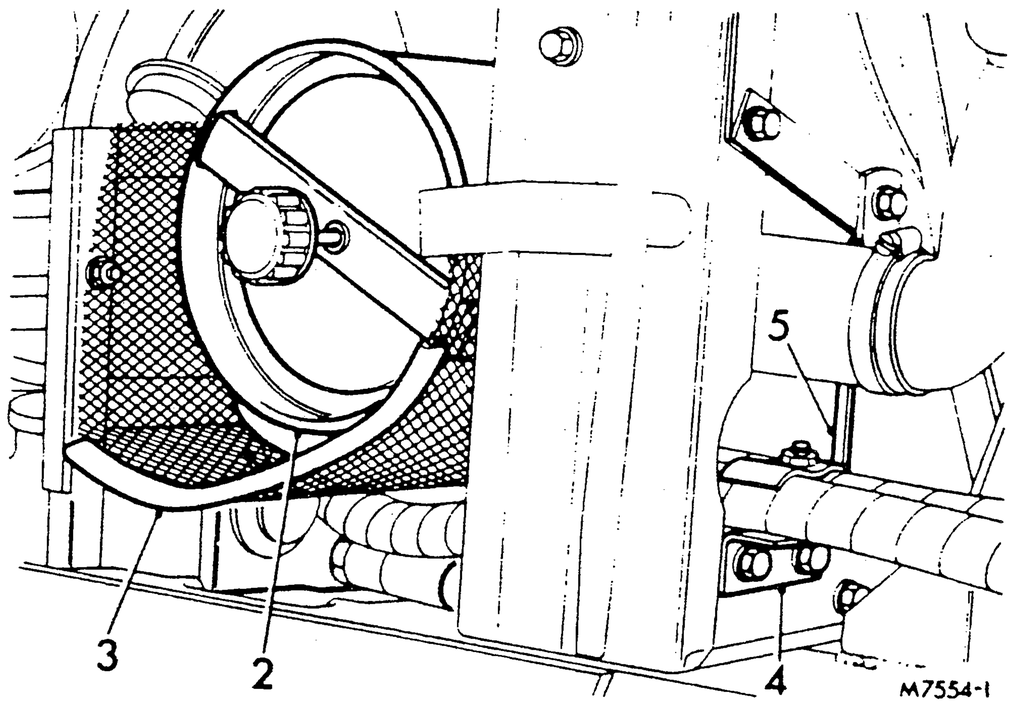

Removing

1. Remove fan belt. TB26.20.10.
2. Disconnect hose and remove air filter assembly.
3. Remove chaff screen.
4. Remove steering hose clip and bracket from radiator frame.
5. Remove blanking plate from radiator assembly.
6. Select low first gear and apply the handbrake fully.
7. Unlock tab washer and remove crankshaft nut.
8. Draw off crankshaft pulley.
9. Remove oil seal, using tool 18G 1111.

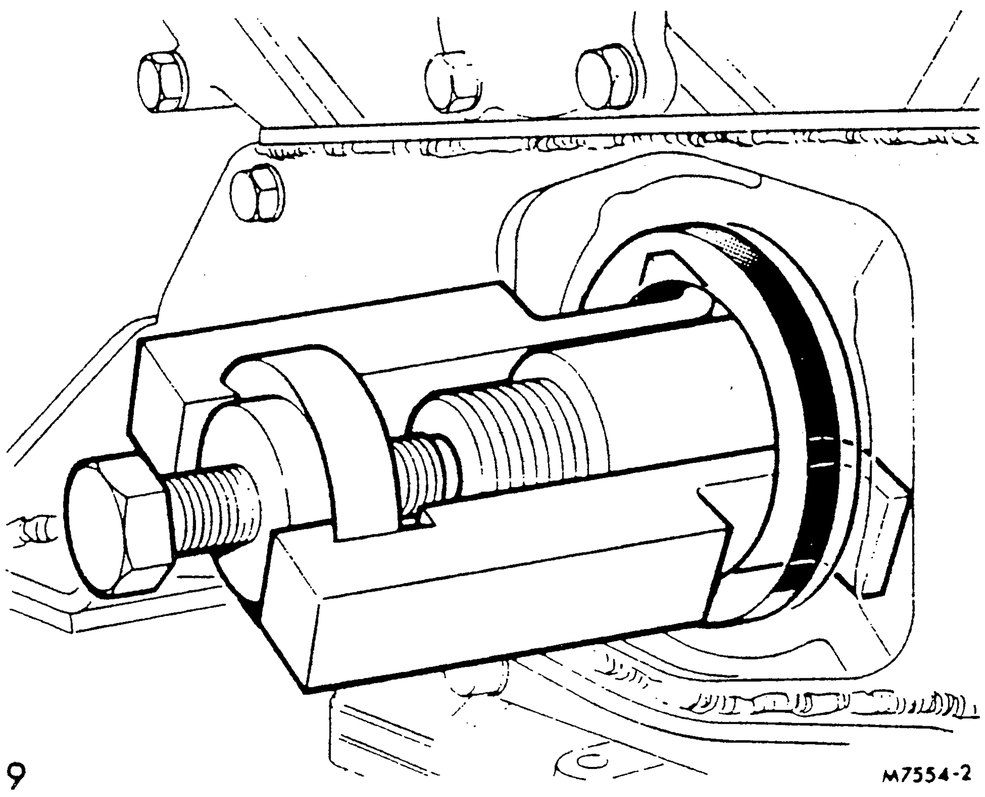

9

Refitting

10. Lubricate new seal with engine oil and fit it using tool 18G 1111.
11. Inspect crankshaft pulley boss where it passes through the oil seal and polish it if required using fine emery cloth.
12. Lubricate pulley boss and fit pulley, lock washer and nut; tighten nut to torque in DATA and lock in position.
13. Fit blanking plate to radiator assembly.
14. Fit steering pipe clip and bracket to radiator.
15. Fit chaff screen.
16. Fit air filter and connect hose.
17. Refit fan belt. TB26.20.10.

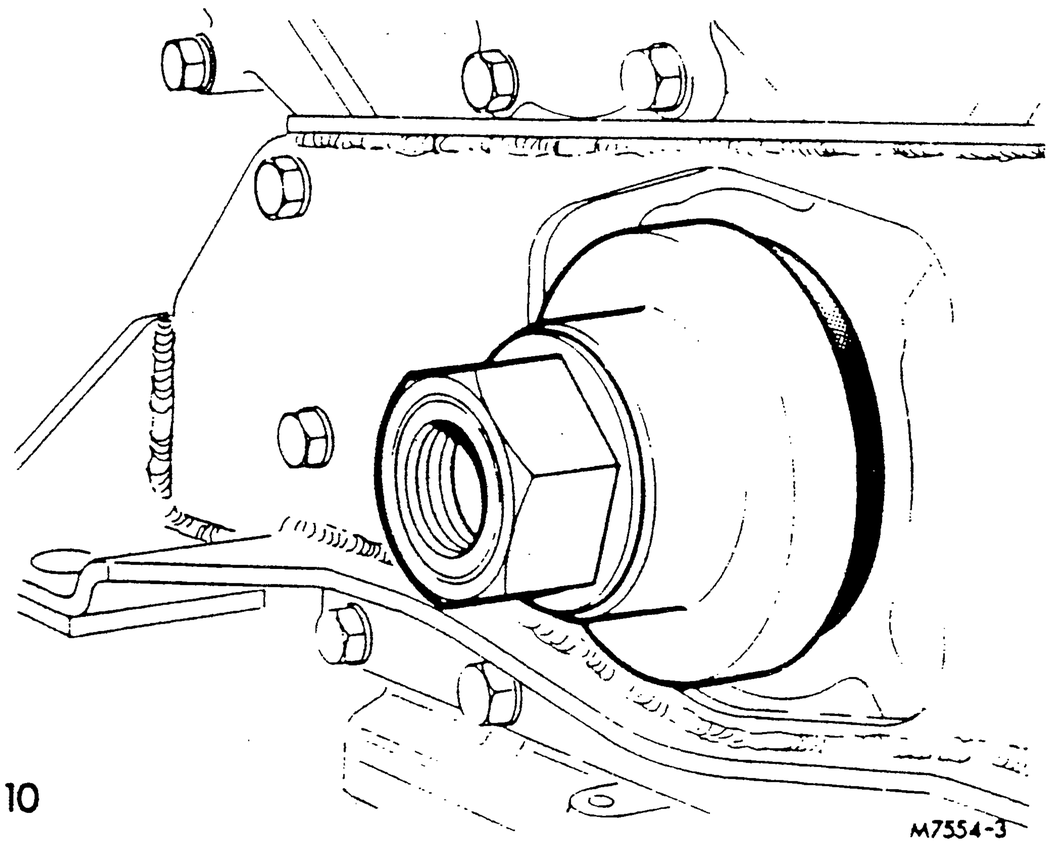

10

DATA

Torque tightening figures	Nm	kgf m	lbf ft
**Crankshaft nut	271	27,7	200**

https://tractormanualz.com/

CRANKSHAFT REAR OIL SEAL

—Remove and refit **TB12.21.20**

Service tools: 18G 134, 18G 134 CP, 18G 1110

Removing

1. Remove clutch. TB33.10.01.
2. Remove flywheel. TB12.53.20.
3. Remove sump. TB12.60.44.
4. Remove oil seal housing and gasket and clean joint faces.
5. Remove roll pin dowels.
6. Remove oil seal from housing.

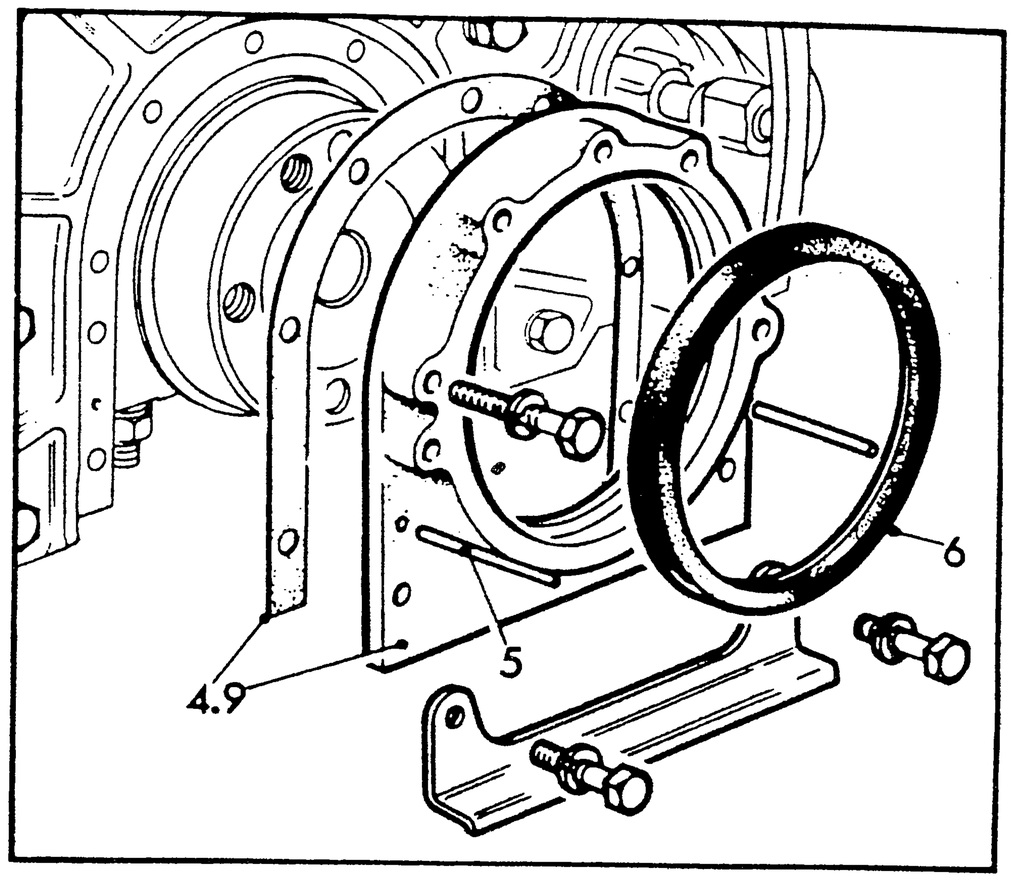

Refitting

7. Use tools 18G 134 and 18G 134 CP to fit a new seal to the housing.
8. Apply sealing compound, see DATA, to the lower portion of the oil seal housing where it contacts the crankcase.
9. Fit a new gasket, lubricate the crankshaft and seal with engine oil and use tool 18G 1110 to fit the housing and seal assembly over the crankshaft.
   NOTE: The housing and seal assembly may be fitted without using the tool but care is required to ensure the seal is not damaged.
10. Insert roll pin dowels to locate housing before fitting and tightening bolts.
11. Refit sump. TB12.60.44.
12. Refit flywheel. TB12.53.20.
13. Refit clutch. TB33.10.01.

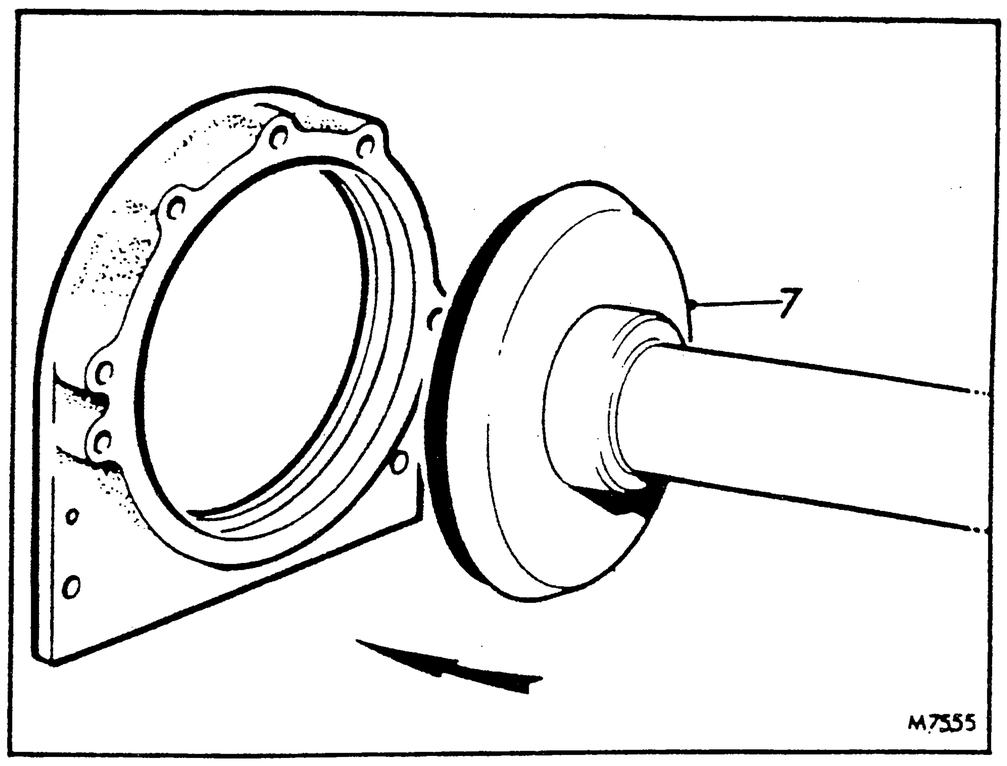

DATA

Special lubricants and compounds

Sealing compound	Hylomar or Welseal

https://tractormanualz.com/

CRANKSHAFT

—Remove and refit TB12.21.33

Service tools: 18G 134, 18G 134 CP, 18G 231 (550), 18G 231 B, 18G 231 C, 18G 498, 18G 1111

Removing

1. Remove engine. TB12.41.01.
2. Remove alternator. TB86.10.02.
3. Remove fan and belt.
4. Remove crankshaft nut and withdraw pulley.
5. Remove engine front mounting bracket.
6. Remove tractometer angle drive.
7. Remove timing cover, alternator bracket, lifting eye and throttle return spring bracket; note lengths and positions of bolts.

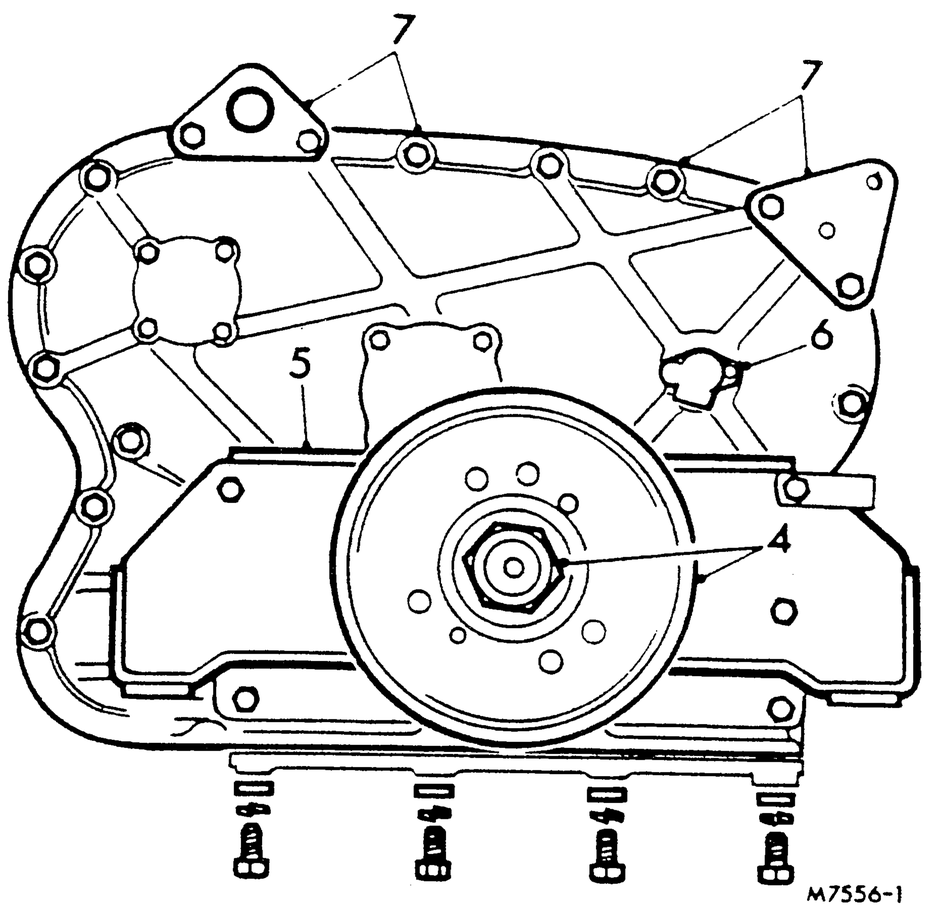

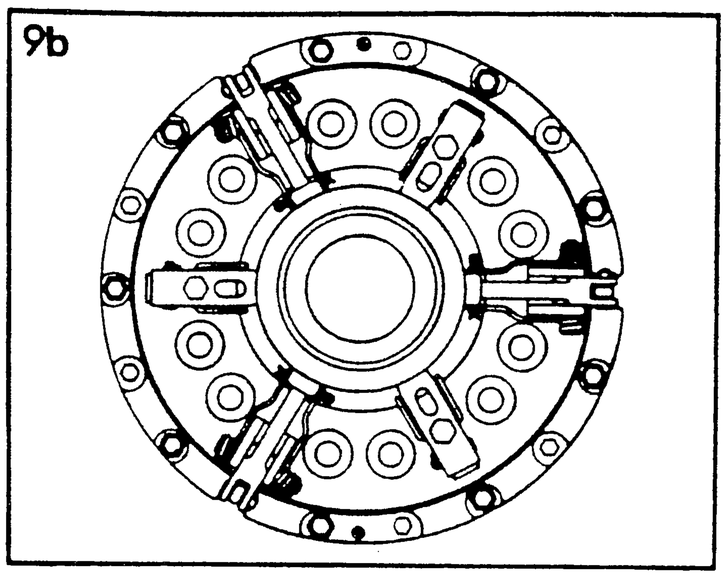

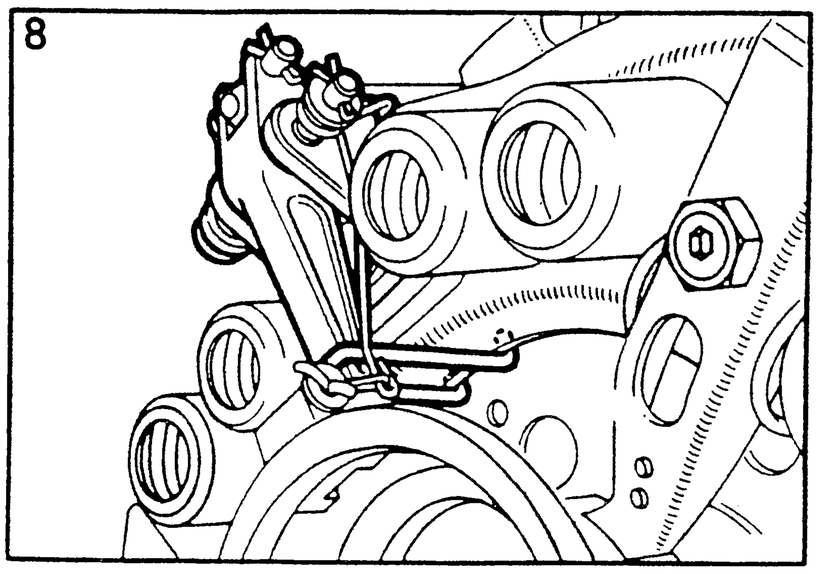

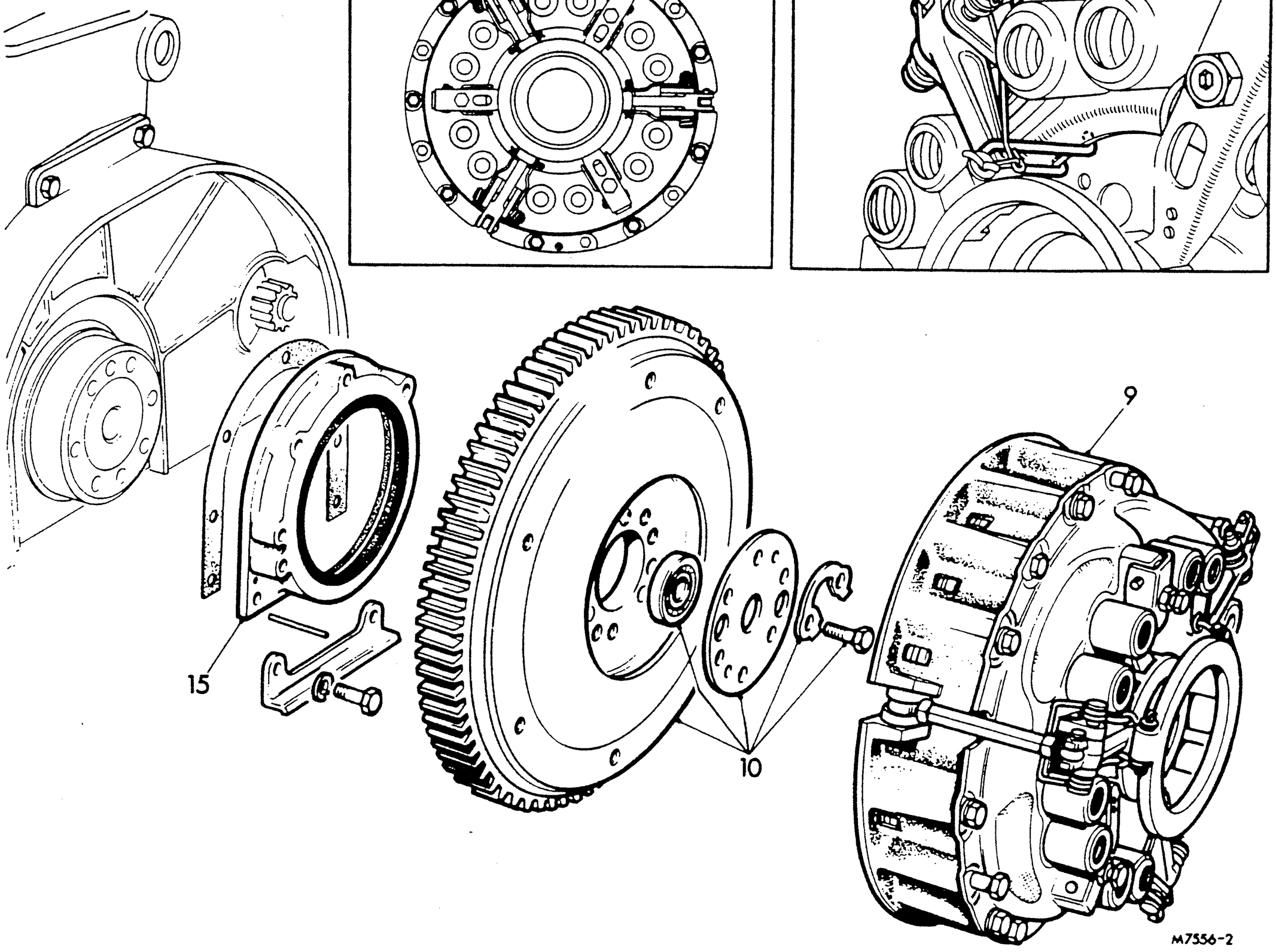

continued

https://tractormanualz.com/

8. Fit retaining staples, tool 18G 498, over each main clutch release lever and hook them under the clutch cover.
9. Remove clutch and driven plate, noting:
   a. Mark position of clutch on flywheel.
   b. Remove only the nine bolts securing the clutch to the flywheel.
10. Release lockplates, remove bolts, lockplates and bearing retainer plate and draw flywheel from crankshaft by screwing two $\frac{3}{8}$in U.N.F. bolts into the threaded extractor holes. Examine bearing, and renew if required.
11. Remove injectors. TB19.60.01.
12. Invert engine and support.
13. Remove crankshaft balancer. TB12.21.06.
14. Remove oil pump. TB12.60.26.
15. Remove crankshaft rear oil seal housing and clean joint faces.

continued

https://tractormanualz.com/

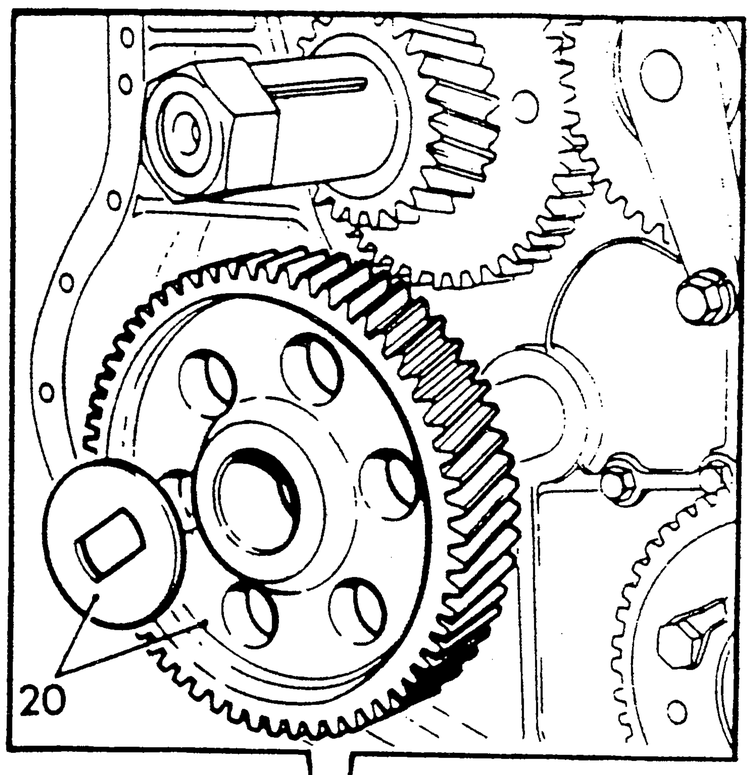

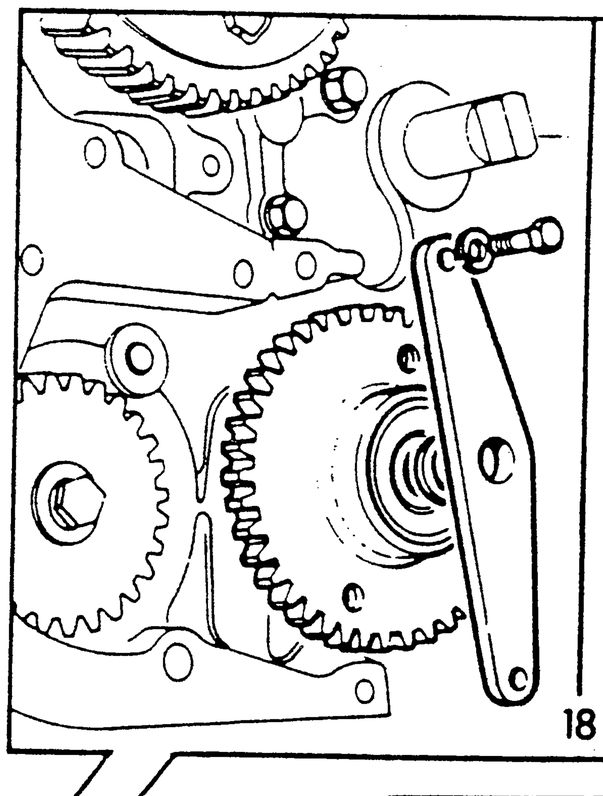

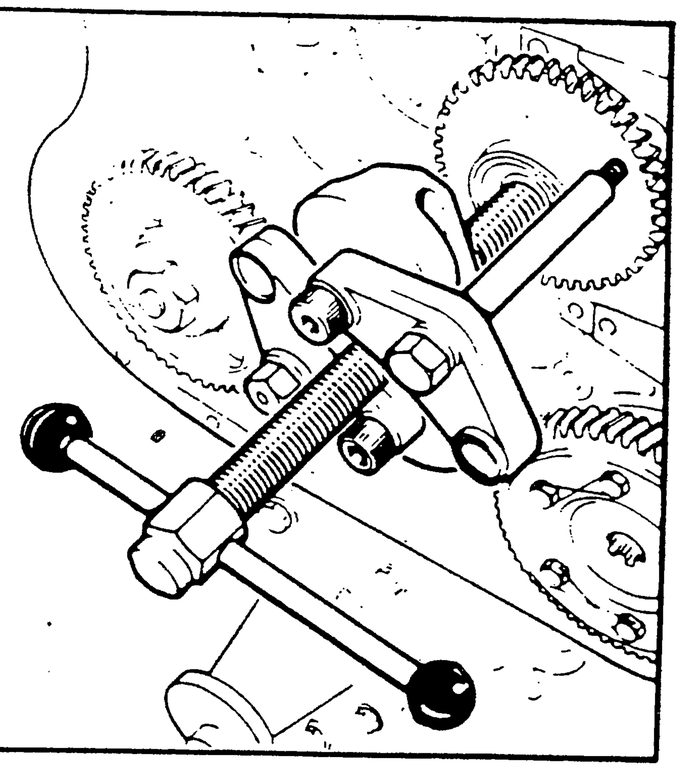

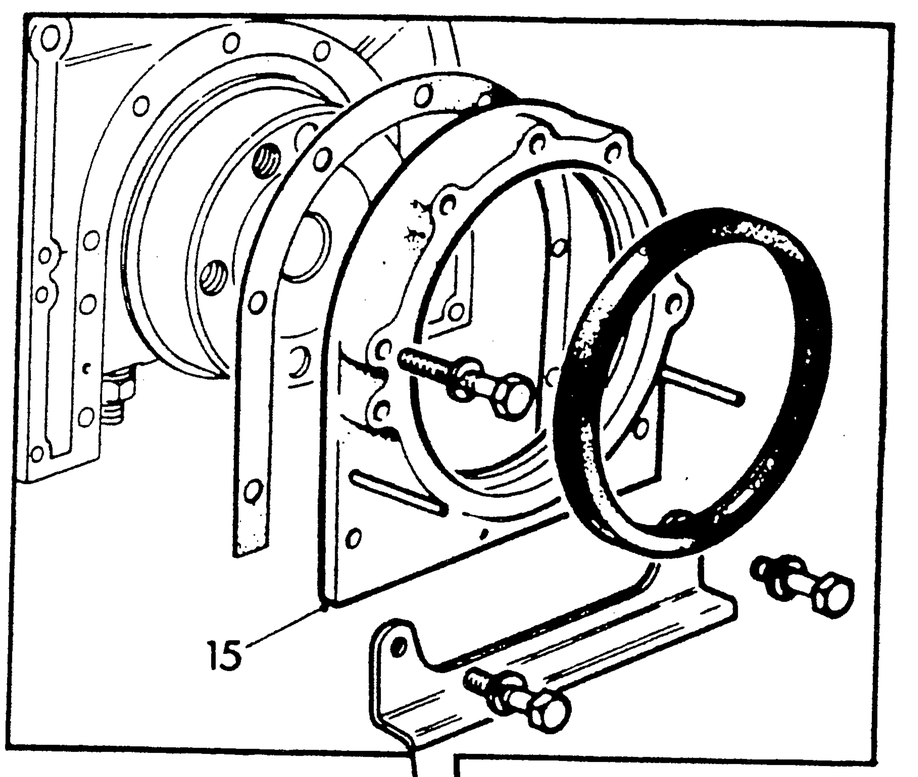

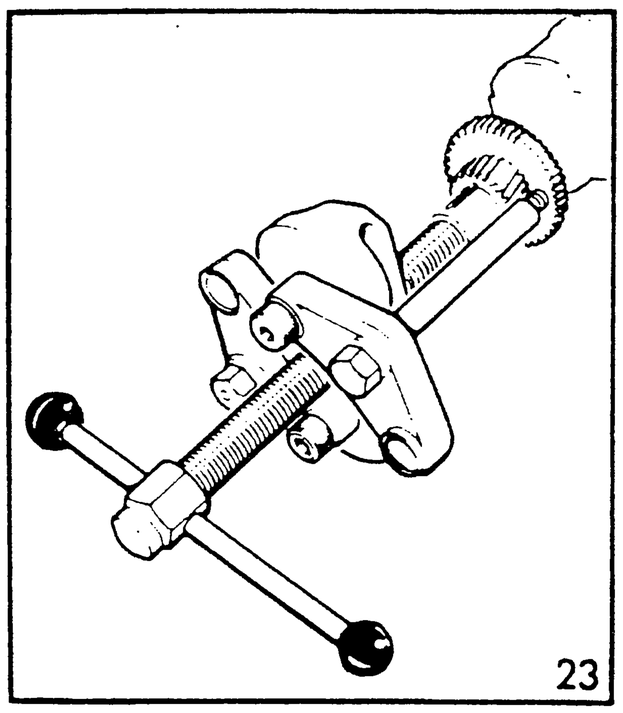

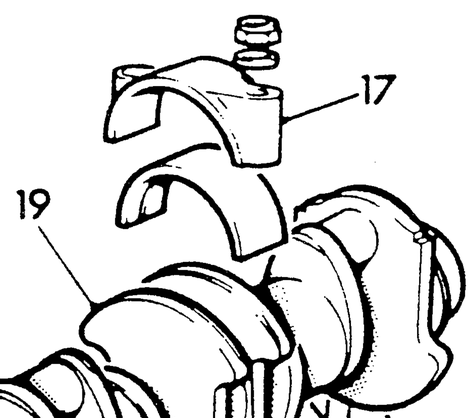

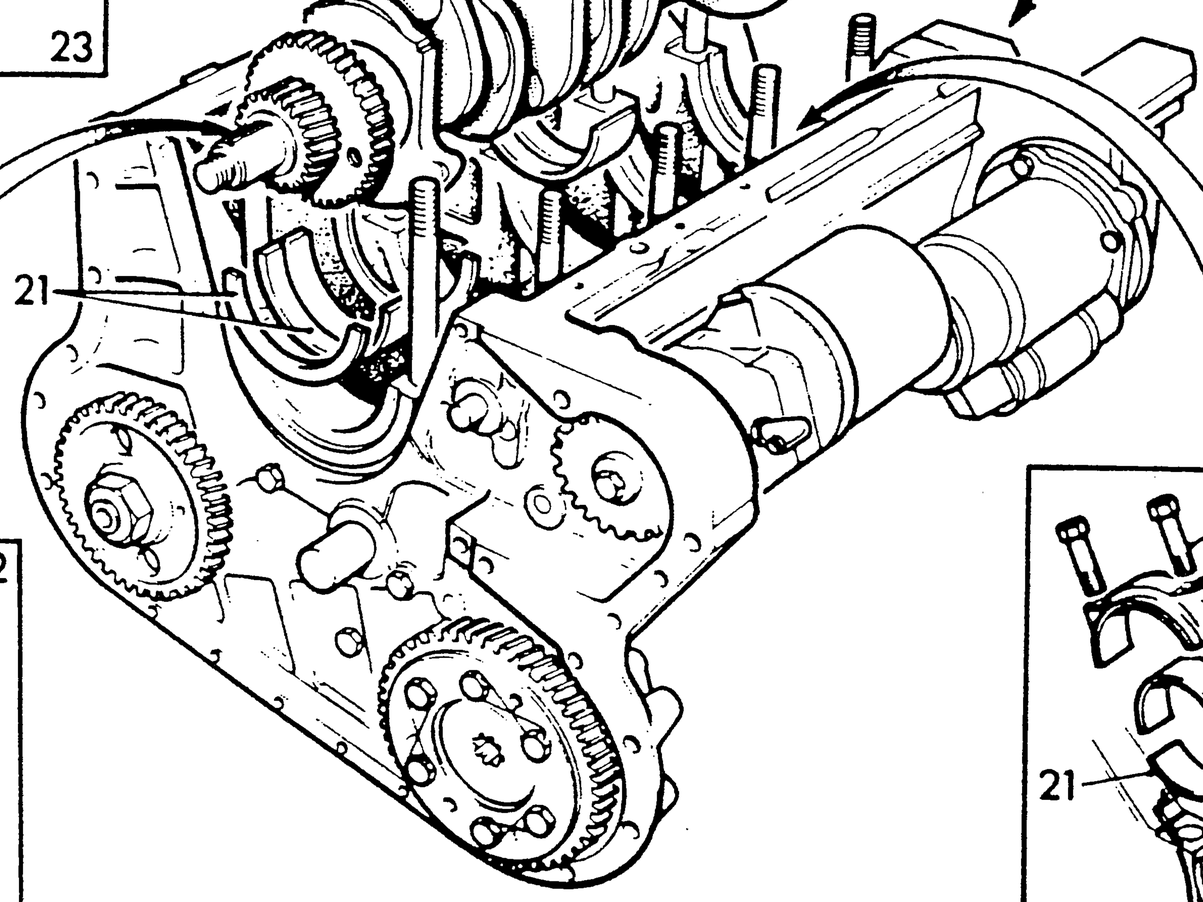

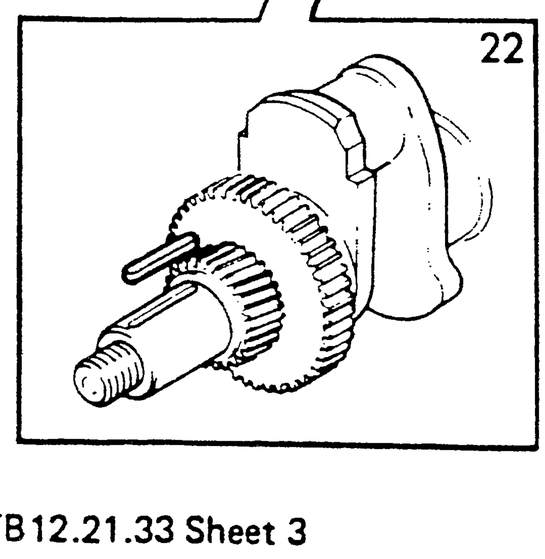

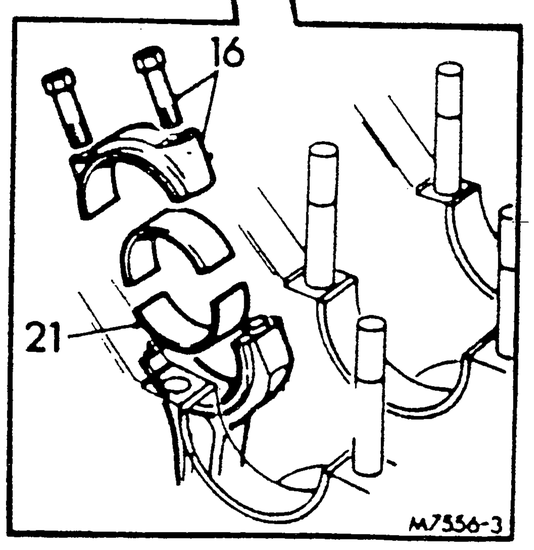

https://tractormanualz.com/

16. Remove big-end caps, push connecting rods down bores and lean them against the induction manifold side of the crankcase.
17. Remove remaining main bearing caps.
18. Remove retaining plate and spacer and draw the steering pump idler gear from its spindle, using tools 18G 231 (550) and 18G 231 C.
19. Lift and manoeuvre crankshaft from crankcase.
20. Remove main idler gear and thrust washer.
21. Remove top halves of thrust washers, main bearings and big-end bearings.
22. Remove crankshaft pulley key.
23. Pull gears from crankshaft using tools 18G 231 (550) and 18G 231 B and remove key.

** Inspection

Inspect parts and renew as required, noting the following points. On earlier models all the main bearing caps are secured by studs, washers and nuts. On later models Nos. 2, 4 and 5 main bearing caps are secured by bolts. If bolts are not to be substituted for studs on Nos. 2, 4 and 5 main bearings the following instructions must be followed:

a. Check the depth of the counterbores of the threaded holes. The depth must be increased if required to 12,5 mm (0.5 in).
b. Using a ⅝ in U.N.F. × 18 T.P.I. plug tap, ensure that the full thread form is available to a depth of 51 mm (2 in) from the butt face and that the tapped hole is completely free of debris or dirt. **

Refitting

24. Thoroughly degrease and clean crankshaft ensuring oilways are clear and bearing and sealing surfaces are polished.
25. Fit key and gears to crankshaft ensuring timing marks face forward; heat gears to 100°C and lubricate bores to assist fitting.
26 Fit pulley key to crankshaft.
27. Clean and fit top halves of main and big-end bearings ensuring that no dirt is trapped behind them.
28. Lubricate bearings with engine oil and lift and manoeuvre crankshaft into place.
29. Rotate crankshaft, camshaft and injection pump drive to align timing marks and fit main idler gear ensuring double timing mark on idler gear aligns with crankshaft timing mark. Check that all timing marks align and fit thrust washer with its grooved side toward gear.
30. Clean, lubricate and fit upper halves of thrust washers to No. 1 main bearing, ensuring their grooved faces are toward the crankshaft thrust faces.
31. Clean, lubricate and fit Nos. 2, 4 and 5 main bearings and caps, noting:
    a. Ensure no dirt is trapped between bearings and caps or between caps and connecting rods.

29

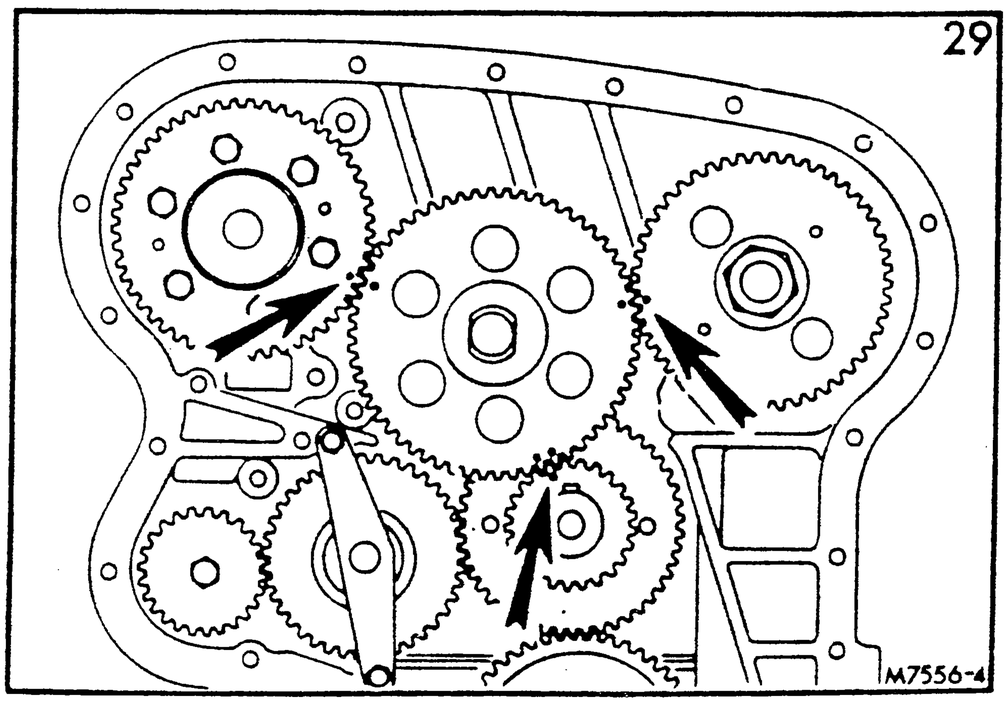

continued

https://tractormanualz.com/

b. Fit caps and re-used bearings in original positions.

** c. Lubricate nut/bolt threads with clean engine oil and tighten to torque figures quoted in DATA.

d. When bolts are used, they must be inserted into the cap before it is fitted to act as locators.

e. Where studs are fitted, the latest type of plain hardened steel washers must be used, see Parts List.**

32. Fit oil pump. TB12.60.26.
33. Fit crankshaft balancer. TB12.21.06.
34. Check crankshaft end-float using a dial gauge; remove oil pump and renew thrust washers if end-float exceeds the figure in DATA.
35. Clean big-end caps and bearings; fit bearings to caps and caps to connecting rods, tightening bolts/nuts to torque in DATA and noting that the caps and connecting rods are numbered for correct assembly.
36. Check that each big-end bearing has end-float on its crankpin.
37 Fit stepped spacer to steering pump idler gear spindle with its recessed side over the circlip.
38. Fit steering pump idler gear, spacer and retaining plate.
39. Fit crankshaft oil flinger with its chamfered edge toward the gear.
40. Clean timing cover joint faces, remove oil seal and fit cover, using a new gasket; ensure lifting-eye, alternator bracket and throttle return spring bracket are fitted in their original positions.
41. Lubricate a new crankshaft front oil seal and fit into timing cover, using tool 18G 1111.
42. Fit crankshaft pulley, tightening nut to torque in DATA before locking in position.
43. Fit rear oil seal housing, noting:
    a. Renew seal; lubricate seal with engine oil and use tools 18G 134 and 18G 134 CP to fit new seal to housing.
    b. Apply sealing compound, see DATA, to lower portion of housing where it contacts the crankcase.
    c. Use a new gasket.
    d. Lubricate crankshaft and ensure seal is not damaged when fitting housing.
    e. Locate housing to crankcase by fitting the roll pin dowels before fitting and tightening bolts.
44. Clean sump joint faces, applying sealing compound, see DATA, to both sides of a new gasket and fit sump.
45. Pack bearing with grease, see DATA, fit flywheel, bearing retainer and bolts with new lockplates, tightening bolts to torque in DATA before locking in position.

    NOTE: On early engines the two dowels locating the flywheel to the crankshaft are offset to ensure flywheel can only be fitted in one position. On later engines only one dowel is fitted.
46. Check flywheel friction face run-out, see DATA, using a dial gauge.

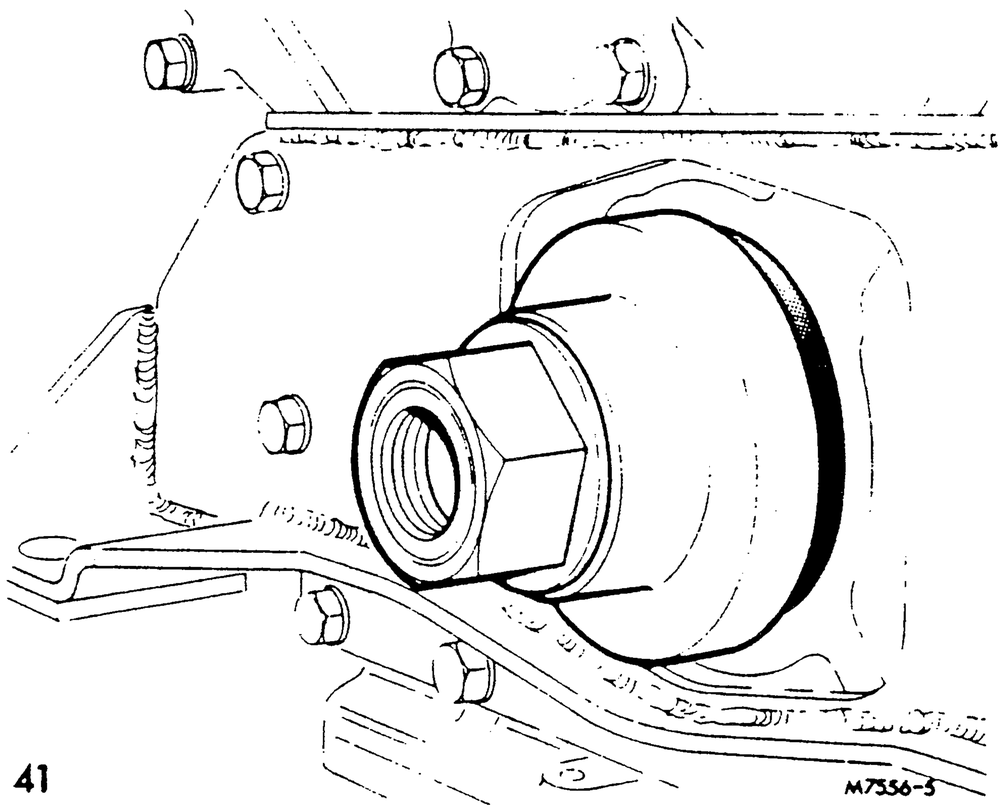

41

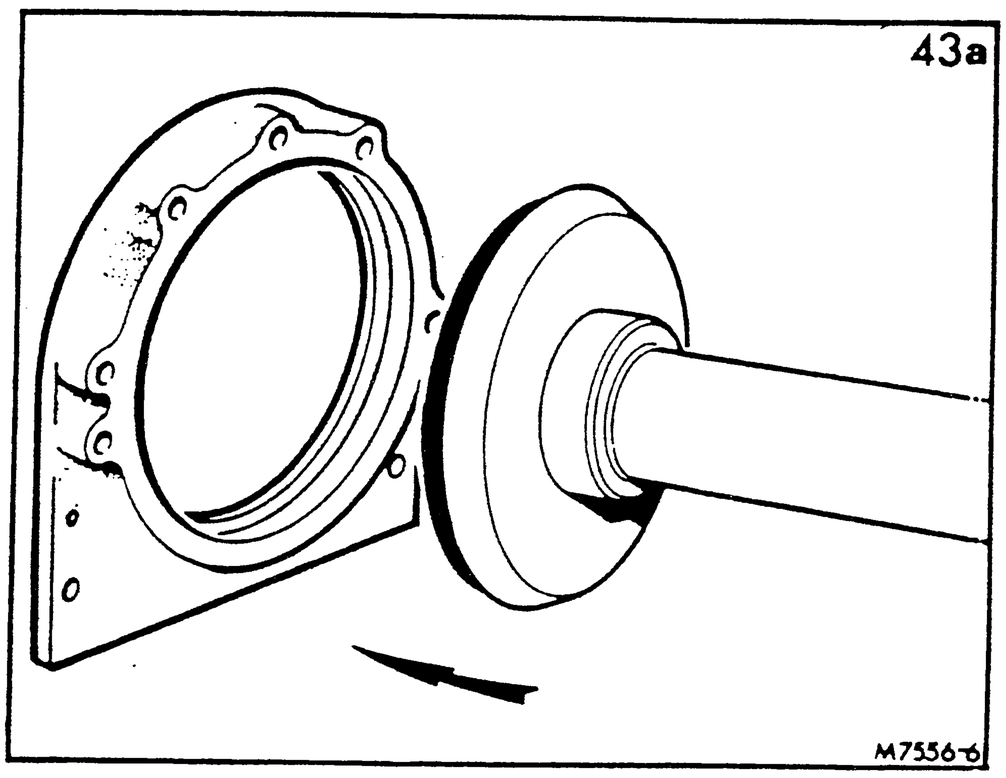

continued

47. Fit clutch, noting:
    a. Align marks made when removing.
    b. Refit main driven plate with its flanged boss away from the flywheel.
    c. Use the transmission shaft to centralise the driven plate with the flywheel.
    d. Remove the retaining staples.
48. Turn engine correct way up and support.
49. Fit engine front mounting plate.
50. Refit injectors. TB19.60.01.
51. Refit fan belt and angle drive.
52. Refit alternator. TB86.10.02.
53. Refit engine. TB12.41.01.

DATA

Crankshaft

** Main bearing journal diameter (new crankshaft)	82,524 to 82,550 mm (3.249 to 3.250 in)
Crankpin diameter (new crankshaft)	66,662 to 66,675 mm (2.6245 to 2.6250 in)**
Main bearing clearance	0,07 to 0,10 mm (0.003 to 0.004 in)
Big-end bearing clearance	0,04 to 0,10 mm (0.0015 to 0.004 in)
Bearing undersizes	0,38, 0,76 and 1,14 mm (0.015, 0.030 and 0.045 in)
End-float	0,20 to 0,38 mm (0.008 to 0.015 in)
End-float adjustment	Fit new thrust washers
Thrust washer thickness (new)	2,31 to 2,36 mm (0.091 to 0.093 in)
Flywheel friction face run-out	0,25 mm (0.010 in) maximum

Special lubricants and compounds

Sealing compound	Hylomar or Welseal
Spigot bearing grease	Duckhams D.B.500

Torque tightening figures

	Nm	kgf m	lbf ft
Connecting rod bolts	80	8,3	60
** Crankshaft nut	271	27,7	200**
Fan and water pump pulley bolts	27	2,8	20
Flywheel securing bolts	136	13,8	100
** Main bearing bolts (lubricated thread)	258	26,3	190
Main bearing nuts (lubricated thread)	163	16,6	120**
Front mounting bracket bolts	40 to 46	4 to 4,6	30 to 35

https://tractormanualz.com/

MAIN BEARINGS AND THRUST WASHERS

—Remove and refit TB12.21.39

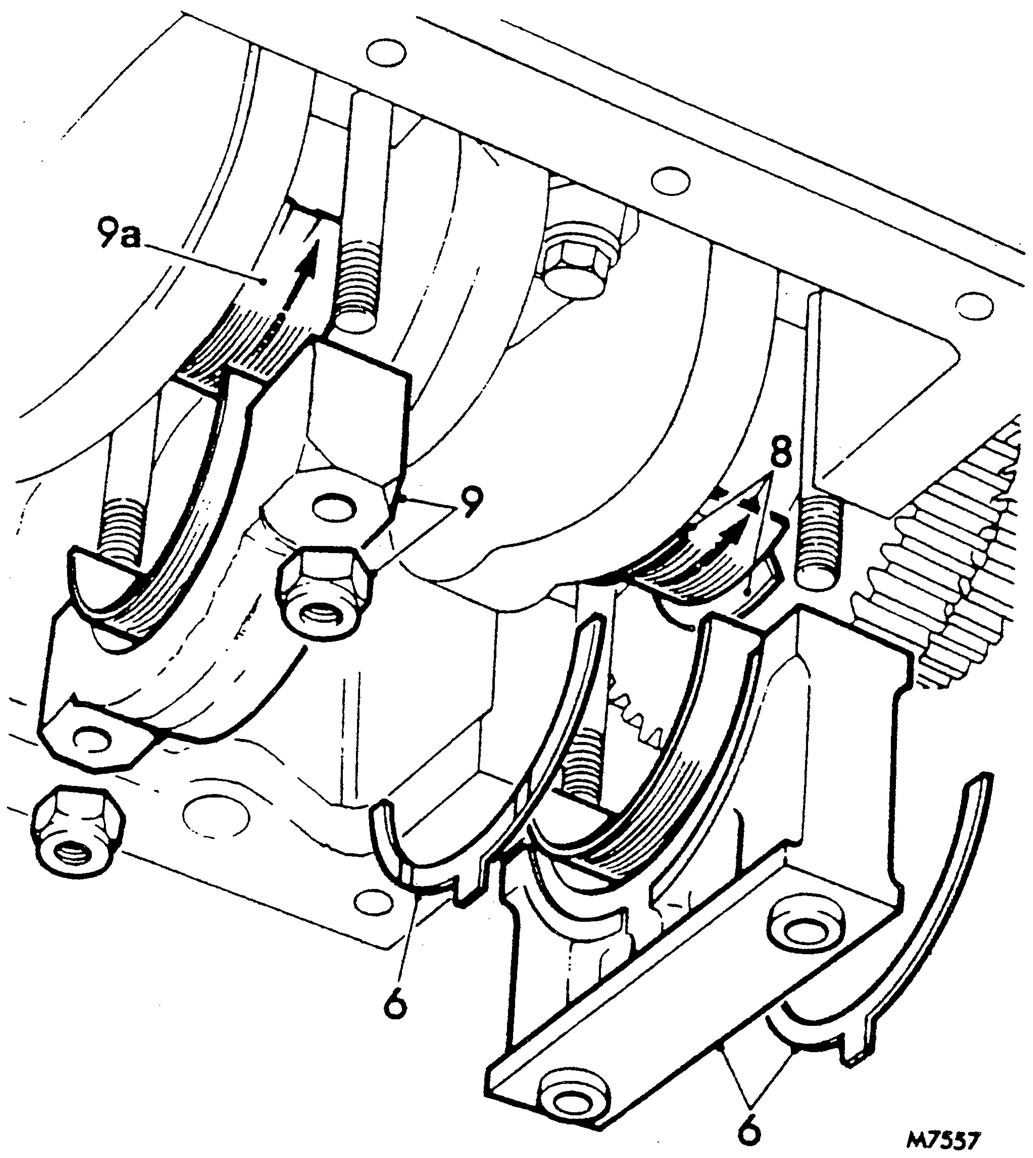

Removing

1. Remove clutch. TB33.10.01.
2. Remove flywheel. TB12.53.20.
3. Remove sump. TB12.60.44.
4. Remove crankshaft rear oil seal. TB12.21.20.
5. Remove crankshaft balancer and No. 3 main bearing cap. TB12.21.06.
6. Remove oil pump. TB12.60.26.
   NOTE: This operation includes No. 1 main bearing cap, lower bearing shell and thrust washer lower halves.
** 7. Slacken remaining main bearing nuts/bolts.**
8. Remove thrust washer and Nos. 1 and 3 bearing upper shells by pushing them round the crankshaft, noting that the upper bearing shells may only be removed one way because of the locating tongues.
9. Remove remaining main bearing caps one at a time, noting:
   a. Remove upper bearing shells by same method as for Nos. 1 and 3 bearings.
   b. Clean bearing journals and caps.

** Inspection

10. Inspect parts and renew as required, noting the following points:
    On earlier models all the main bearing caps are secured by studs, washers and nuts. On later models Nos. 2, 4 and 5 main bearing caps are secured by bolts. If bolts are to be substituted for studs on Nos. 2, 4 and 5 main bearings the following instructions must be followed:
    a. Check the depth of the counterbores of the threaded holes. The depth must be increased if required, to 12,5 mm (0.5 in).
    b. Using a ⅝ in U.N.F. X 18 T.P.I. plug tap, ensure that the full thread form is available to a depth of 51 mm (2 in) from the butt face and that the tapped hole is completely free of debris or dirt.**

Refitting

NOTE: Lubricate bearing shells before refitting, ensuring that their locating tongues are correctly positioned and that no dirt is trapped behind them or between the mating faces of the caps and cylinder block.

**11. Refit each bearing cap before removing others but do not full tighten the nuts/bolts.
NOTE: When bolts are fitted, their threads must be lubricated with clean engine oil and they must be inserted into the cap before it is fitted to act as locators. When studs are fitted, the latest type of plain hardened washers must be used, see Parts List.
12. Lubricate and fit Nos. 1 and 3 main bearing shells and thrust washer upper halves; ensure grooved faces of thrust washers are toward crankshaft thrust faces.
13. Tighten nuts/bolts of Nos. 2, 4 and 5 main bearings to torque in DATA.
14. Refit oil pump. TB12.60.26.
15. Refit crankshaft balancer but do not fit sump. TB12.21.06.
16. Check crankshaft end-float, see DATA, using a dial gauge.
17. Fit a new crankshaft rear oil seal to its housing and refit housing to cylinder block. TB12.21.20.
18. Refit sump. TB12.60.44.
19. Refit flywheel. TB12.53.20.
20. Refit clutch. TB33.10.01.**

DATA

Crankshaft

End-float	0,20 to 0,38 mm (0.008 to 0.015 in)

Torque tightening figures

	Nm	kgf m	lbf ft
**Main bearing bolts (lubricated thread)	258	26,3	190
Main bearing nuts (lubricated thread)	163	16,6	120**

https://tractormanualz.com/

CYLINDER PRESSURES

—Check TB12.25.01

1. Run engine to normal working temperature.
2. Remove injectors. TB19.60.01.
3. Assemble test equipment and fit to injector bore. (See manufacturer's instructions.)
4. Pull stop control fully out and crank engine. Note reading on gauge.
5. Repeat instructions 3 and 4 for other cylinders.
6. Dismantle test equipment.
7. Refit injectors, see TB19.60.01.

ENGINE SIDE COVER OR GASKET — NATURALLY ASPIRATED MODELS

—Remove and refit TB12.25.14

Removing

1. Remove alternator. TB86.10.02.
2. Drain cooling system.
3. Disconnect control cable from water valve and release from clip on side cover.
4. Disconnect heater hose from valve.
5. Slacken clip securing hose to thermostat housing, release clip securing pipe to exhaust manifold stud and remove water valve complete with pipe from side cover.
6. Remove oil pipe.
7. Remove breather pipe from rocker cover and clip from exhaust manifold stud.
8. Remove side cover and clean joint faces.

Refitting

9. Reverse procedure in 1 to 8, tightening the exhaust manifold nuts to torque in DATA.

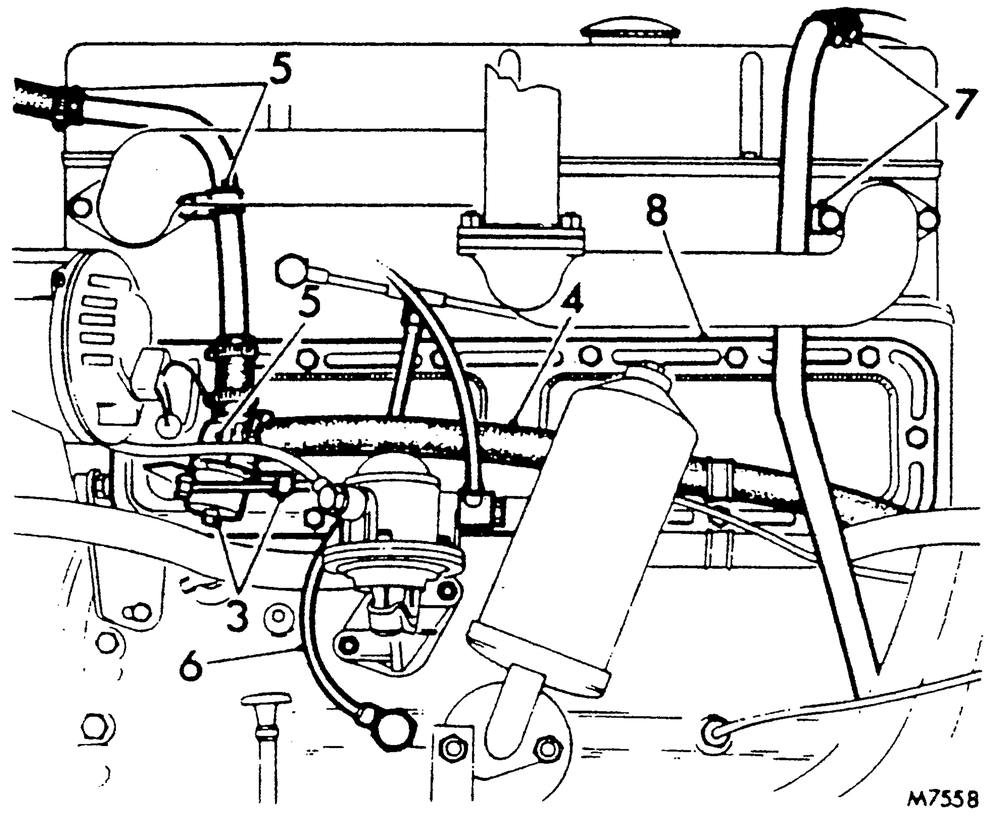

DATA

Torque tightening figures	Nm	kgf m	lbf ft
**Exhaust manifold nuts	40	4	30**

**ENGINE SIDE COVER OR GASKET — TURBO-CHARGED MODELS

—Remove and refit TB12.25.14

Removing

1. Disconnect battery negative (—) terminal and raise bonnet.
2. Remove oil filter assembly and clip securing power steering pipes.
3. Drain coolant, see TB10.
4. Disconnect heater hose clip, noting spacer and manoeuvre aside.
5. Disconnect oil feed pipe at turbocharger, and flexible hose; remove clip securing pipe to side cover and withdraw pipe.
6. Disconnect breather pipe, remove pipe noting spacer.
7. Disconnect heater control valve from side cover, feed pipe from valve and move aside.
8. Slacken flexible hose clips connecting turbocharger oil drain pipe to side cover; slide flexible hose up onto top pipe.
9. Disconnect rocker shaft oil feed pipe at lower gallery, slacken top banjo bolt and move pipe away from working area.
10. Disconnect fuel feed pipe at lift pump.
11. Remove remaining bolts securing side cover and manoeuvre away from tractor.
12. Remove joint and clean joint faces.

Refitting

13. Reverse procedure 1 to 12 fitting a new joint.
14. Check and top-up with oil, see TB10.**

TB12.25.01
TB12.25.14

https://tractormanualz.com/

CYLINDER HEAD GASKET

—Remove and refit TB12.29.11

Service tool: 18G 396

Removing

TURBOCHARGED ENGINES: The instructions below were specifically written for naturally aspirated engines. Follow the same basic procedure for turbocharged engines, having first removed the turbocharger, see TB30.15.16.

1. Remove side panels and disconnect earth lead from battery negative (—) terminal.
2. Drain cooling system.
3. Remove rocker shaft assembly. TB12.29.54.
4. Disconnect air filter hose from manifold adaptor and blank off hose and adaptor to prevent ingress of dirt.
5. Remove top hose.
6. Remove thermostat housing to water pump hose.
7. Disconnect spade terminal from temperature transmitter.
8. Disconnect heater hose from water valve.
9. Disconnect control cable from water valve.
10. Disconnect water pipe to thermostat housing hose, release pipe clip from exhaust manifold stud and remove heater control valve complete with pipe.
11. Remove bolt securing fuel pipe clip to thermostat housing.
**12. Remove bolts securing steady bracket (if fitted) to fuel filter support bracket and slacken screws securing bracket to cylinder block.
13. Remove exhaust manifold nut (if required) and breather pipe.**
14. Remove baffle board.
15. Remove oil feed pipe.
16. Remove injectors and leak-off pipe. TB19.60.01.
17. Remove injector pipes and fit dust caps to prevent ingress of dirt into pipes and injection pump.
18. Remove push-rods.
*19. Progressively slacken and remove cylinder head nuts in reverse sequence to that shown and remove fuel filter steady bracket (if fitted).**
20. Clear all loose pipes, wires, etc., obstructing removal of cylinder head.
21. Break seal and lift off cylinder head.
22. Lift cylinder gasket from the two roll-pin dowels and cylinder head studs.

IMPORTANT: Cover the cylinder bores to prevent ingress of dirt which may cause subsequent rapid engine wear.

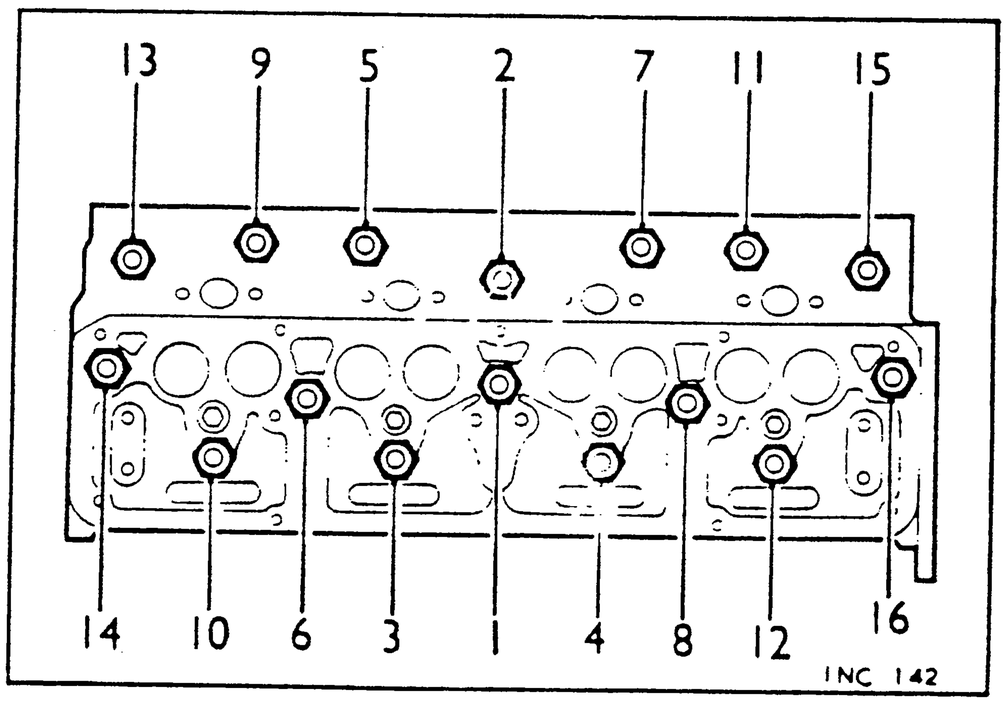

continued

https://tractormanualz.com/

Refitting

23. Clean joint faces of cylinder head and block and fit a new gasket with the side marked 'HEAD FACE' toward the cylinder head.
24. Lift cylinder head into position.
25. Fit fuel filter steady bracket (if fitted) and cylinder head nuts, ensuring that the nuts are free turning on the studs, that the correct washers are fitted and that the threads and washers are liberally lubricated with clean engine oil (S.A.E. 20).
26. Tighten cylinder head nuts progressively following the sequence shown, until the correct torque is obtained, see DATA.
27. Fit bolts securing steady bracket (if fitted) to fuel filter bracket and tighten bolts securing bracket to cylinder block.
28. Secure fuel pipe to thermostat housing.
29. Spray test and fit injectors. TB19.60.01.
30. Fit injection pipes.
31. Fit oil feed pipe.
32. Fit top hose.
33. Fit hose between water pump and thermostat housing.
34. Fit heater valve, secure pipe to exhaust manifold stud tightening to torque in DATA and connect hose to thermostat housing.
35. Connect control cable and heater hose to water valve.
36. Connect wire to temperature transmitter.
37. Connect air filter hóse to manifold.
38. Fit push-rods.
39. Fit rocker shaft and cover. TB12.29.54.
40. Fit breather pipe and secure to exhaust manifold stud (if applicable), tightening nut to torque in DATA.
42. Connect earth lead to battery negative (—) terminal, secure baffle and fit side panels.
43. Bleed fuel system. TB19.50.07.
44. **IMPORTANT: To ensure a satisfactory cylinder head to block seal it is imperative that the procedure detailed below be followed.**

**a. Run the engine until it reaches normal working temperature.
NOTE: To obtain a stable temperature the tractor should be given an extensive road test.

b. Whilst the engine is hot, slacken (early engines — slacken nut one flat, later engines — slacken nut one-half turn), then immediately re-tighten each nut in turn to the correct torque following the sequence shown, using tool 18G 396 as required.**

c. Re-adjust valve rocker clearances. TB12.29.48.

d. Replace rocker cover.

DATA

Torque tightening figures	Nm	kgf m	lbf ft
** Cylinder head nuts:			
Prior to engine Nos. 4/98 DT-11155 or 4/98 NT-56730	136	13,8	100
All later engines including 4/98 TT	149	15,2	110
Exhaust manifold nuts	41	4,1	30**

https://tractormanualz.com/

CYLINDER HEAD — NATURALLY ASPIRATED ENGINES

—Decarbonise and valve grind TB12.29.19

Service tools: 18G 106 (or LC 6118 and LC 6118-6), 18G 228, 18G 29, 18G 284, 18G 284 AAH, LC 176

Hand tools: MS 150-8.5, MS 503, MS 642 and MS 655 are available to re-cut and narrow the valve seats.

Dismantling

1. Remove cylinder head. TB12.29.11.
2. Remove inlet manifold and clean joint faces.
3. Remove exhaust manifold and clean joint faces.
4. Remove baffle board support and lifting eye; clean joint faces.
** 5. Remove cotter retaining clips (if fitted).**
6. Compress each valve spring using tool 18G 106 (or LC 6118 and LC 6118-6) and remove cotters.
7. Remove collars and springs.
8. Remove oil seals and retainers from exhaust valves.
9. Remove thimbles, oil seals and keys from inlet valves.
10. Remove valves; maintaining their original order.
11. Remove carbon deposits from cylinder head, pistons and valves.

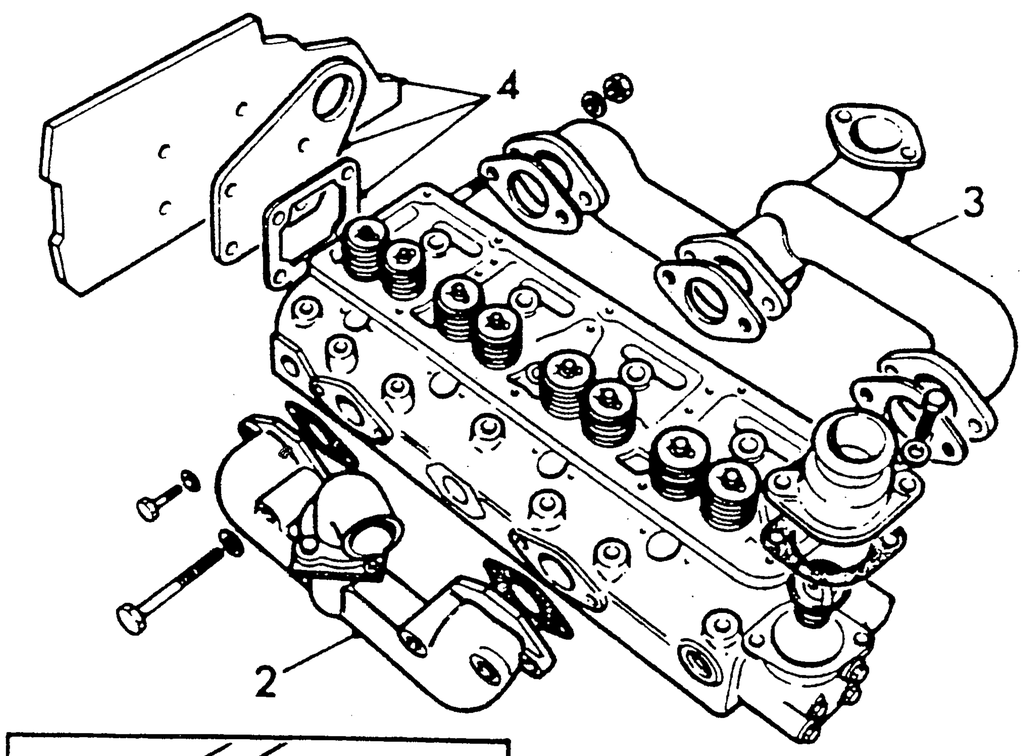

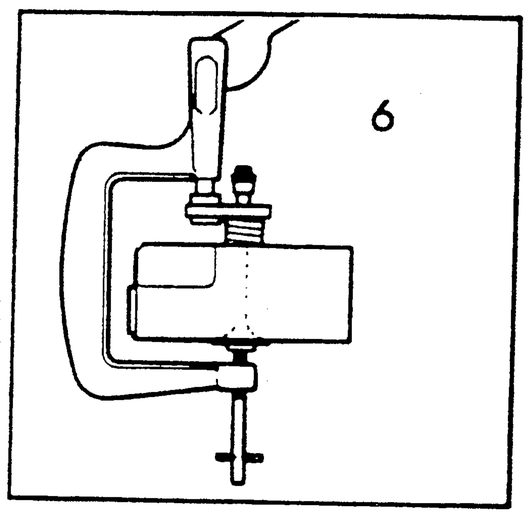

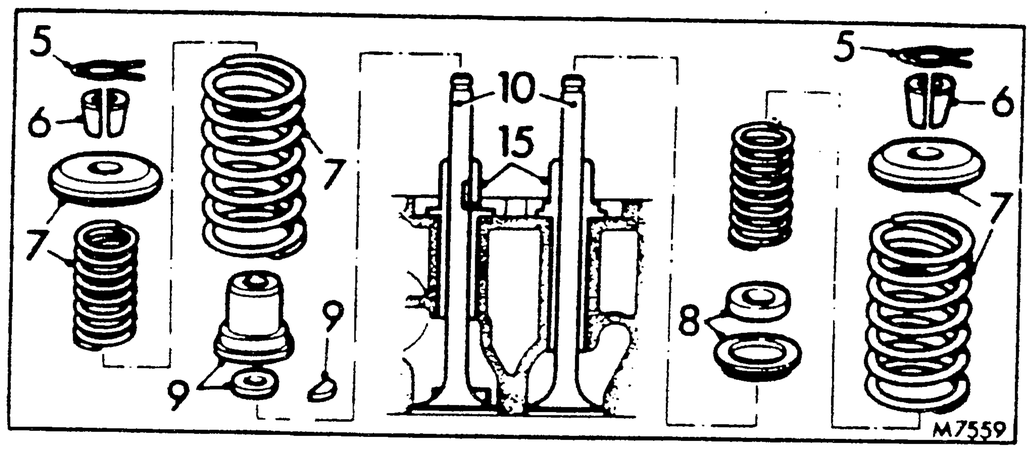

Inspection

12. Inspect cylinder head for major damage, and replace if necessary.
13. Check flatness of cylinder head bottom face and crankcase are within maximum stated in DATA; machine flat if required (see below).
14. Replace leaking or damaged injector sleeves. TB12.29.33 – additional work.
15. Check valve guides; renew if worn. TB12.19/01 or /02.
16. Inspect valve stems for straightness or excessive wear and valve faces for pitting or burning; if necessary replace or regrind to the angle given in DATA.
17. Check each valve seat face; recondition or renew exhaust valve seat inserts. TB12.29.19/03.
18. Check valve springs; renew if not as specified in DATA.
** 19. Inspect core plugs for leaks and replace if necessary using sealing/locking compound quoted in DATA. Ensure that plugs in top face of cylinder head are screwed in just below machined face.**

continued

https://tractormanualz.com/

Valve seat reconditioning

20. Remove glazing from valve seats.
21. Re-cut seats, removing minimum amount of metal necessary to correct seat.
22. Narrow valve seats to limits in DATA, ensuring finished seat contacts mid portion of valve face.
23. Check stand-proud of each inlet valve head is within limits in DATA. If stand-proud is less than minimum allowed, even with a new valve fitted, machine the cylinder head face (see below).
24. Renew the seat inserts of exhaust valves with stand-proud less than minimum stated in DATA, even with a new valve fitted.
25. Lap valves to seats with fine grinding paste, using tool 18G 29.
    NOTE: If tool MS 642 has been used to re-cut the valve seats lapping of the valves should not be required.
26. Wash all traces of grinding paste from head and valves with suitable solvent.

Valve guide replacement — additional work

—Inlet **TB12.29.19/01**

—Exhaust **TB12.29.19/02**

27. Press or drive out the guide, using tool 18G 228.
28. Press in a new guide; ensure slot in each inlet guide flange engages its locating peg.
29. Re-cut valve seat to ensure concentricity with new guide.

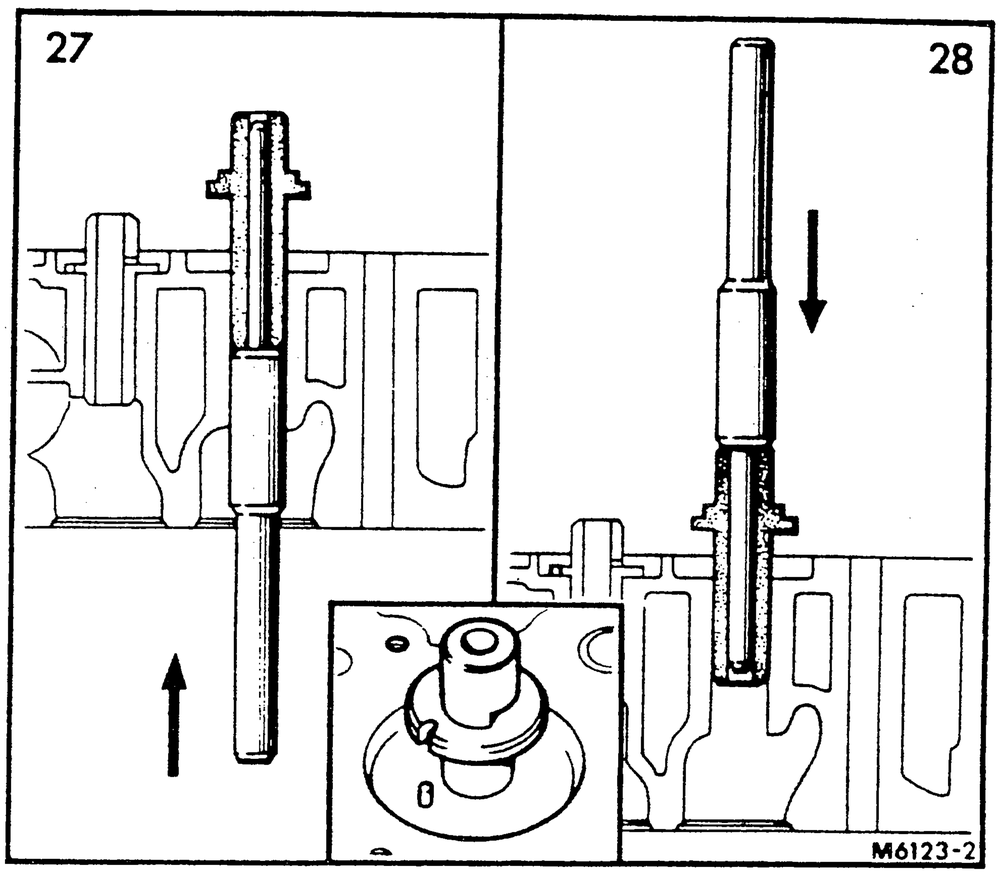

Exhaust valve seat inserts — additional work TB12.29.19/03

If an exhaust valve seat cannot be restored by cutting, or the stand-proud of any valve is less than the minimum stated in DATA, even with a new valve fitted, the exhaust valve seat insert(s) must be replaced.

30. Remove insert, using tools 18G 284 and 18G 284 AAH.
31. Press in new insert, using tool LC 176.
32. Re-cut insert seat to ensure concentricity with valve sleeve.

continued

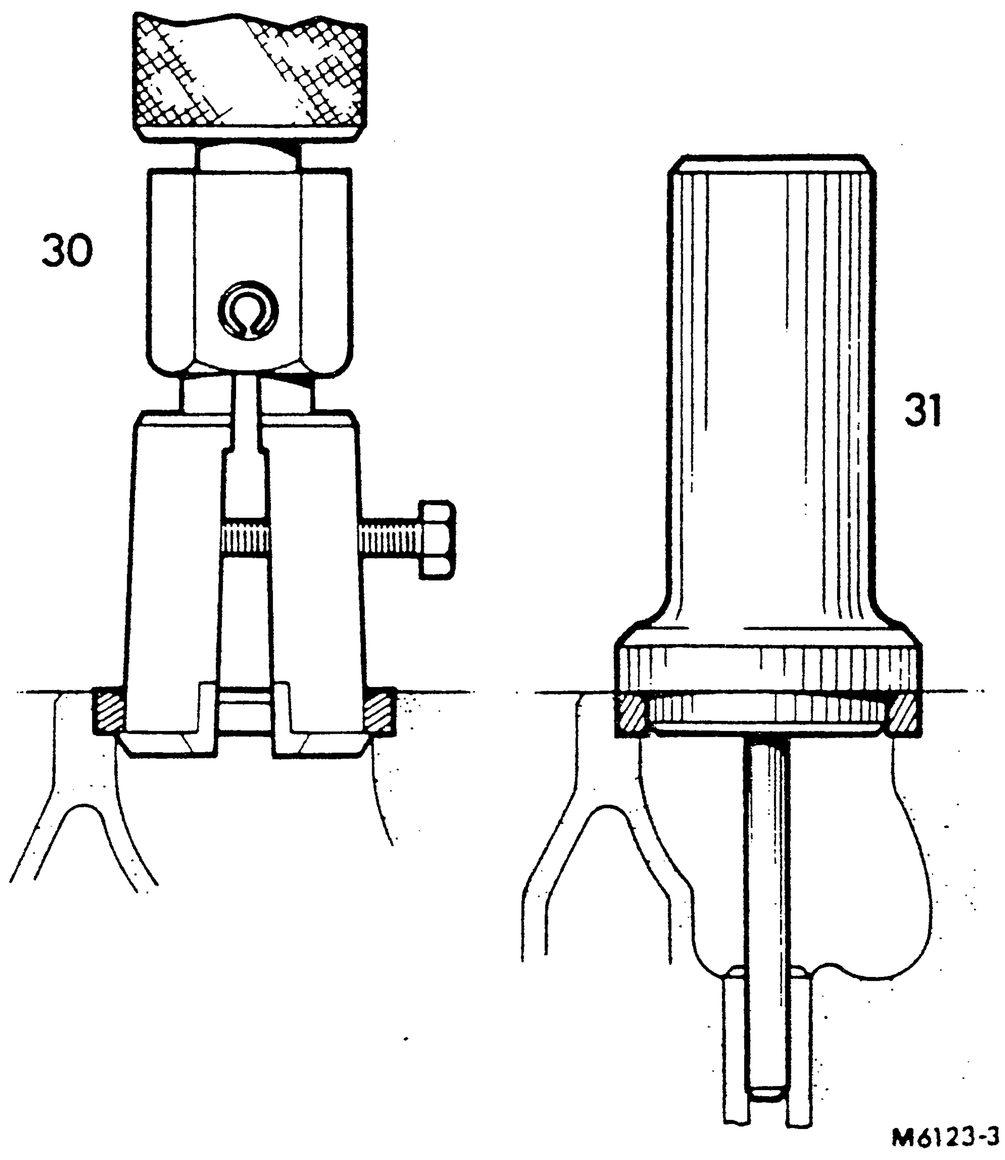

Machine cylinder head face — additional work

33. Check that sufficient metal may be removed to rectify fault, see DATA.
34. Remove exhaust valve seat inserts.
35. Skim cylinder head face maintaining minimum head depth specified in DATA.
36. Machine exhaust valve seat insert bores to dimensions in DATA.
37. Fit new exhaust valve seat inserts.
38. Re-cut the seat of any valve if its stand-proud is greater than the maximum in DATA.

Reassembling

39. Ensure water channels in cylinder head are clear.
40. Reverse procedure in 2 to 10, noting:
    a. Fit new gaskets and valve stem oil seals.
    b. Liberally apply the lubricant specified in DATA to the valve guide bores and valve stems when assembled. Lubricate all other wearing surfaces with clean engine oil.
    c. Align flat on each inlet valve stem with slot in guide and fit key.
    d. Tighten exhaust manifold nuts and inlet manifold bolts to torque in DATA.
41. Refit cylinder head. TB12.29.11.

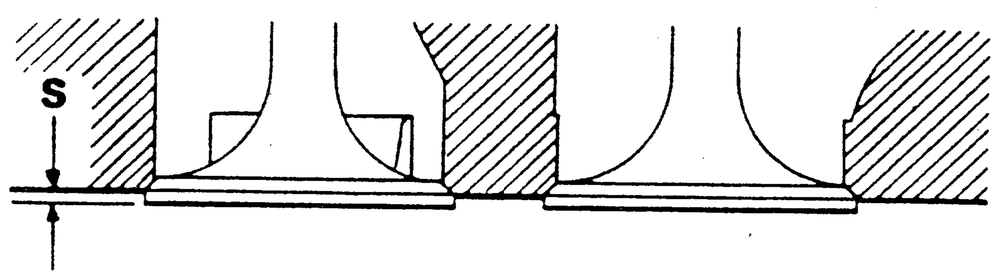

M6123-5

DATA

Cylinder head

**	Cylinder head/crankcase flatness:	
	Longitudinal	± 0,04 mm (± 0.0015 in)
	Traverse	± 0,013 mm (± 0.0005 in)
	Cylinder head surface finish	1,1 micrometre (40 microinch) max.
	Crankcase surface finish	1,8 micrometre (70 microinch) max.**
**	Valve stand-proud 'S'	1,6 to 1,8 mm (0.062 to 0.072 in)**
	Valve seat angle (inlet and exhaust)	45°
	Valve seat face width (at 45°)	1,40 to 1,78 mm (0.055 to 0.070 in)
	Valve port nominal diameters:	
	Inlet	40,4 mm (1.59 in)
	Exhaust	34.5 mm (1.36 in)
**	Minimum cylinder head depth after machining	95,00 mm (3.74 in) i.e. 0,50 mm (0.020 in) maximum skim**
	Injector nozzle protrusion after machining	3,99 to 4,17 mm (0.157 to 0.164 in)

**Special lubricants and compounds

Core plug sealing/locking compound	Loctite 270 (clean threads thoroughly, apply Loctite Primer Code 'N' and allow to dry)
Valve guide bore and valve lubricant	Graphited oil (Acheson's Colloids 'Oildag')**

continued

https://tractormanualz.com/

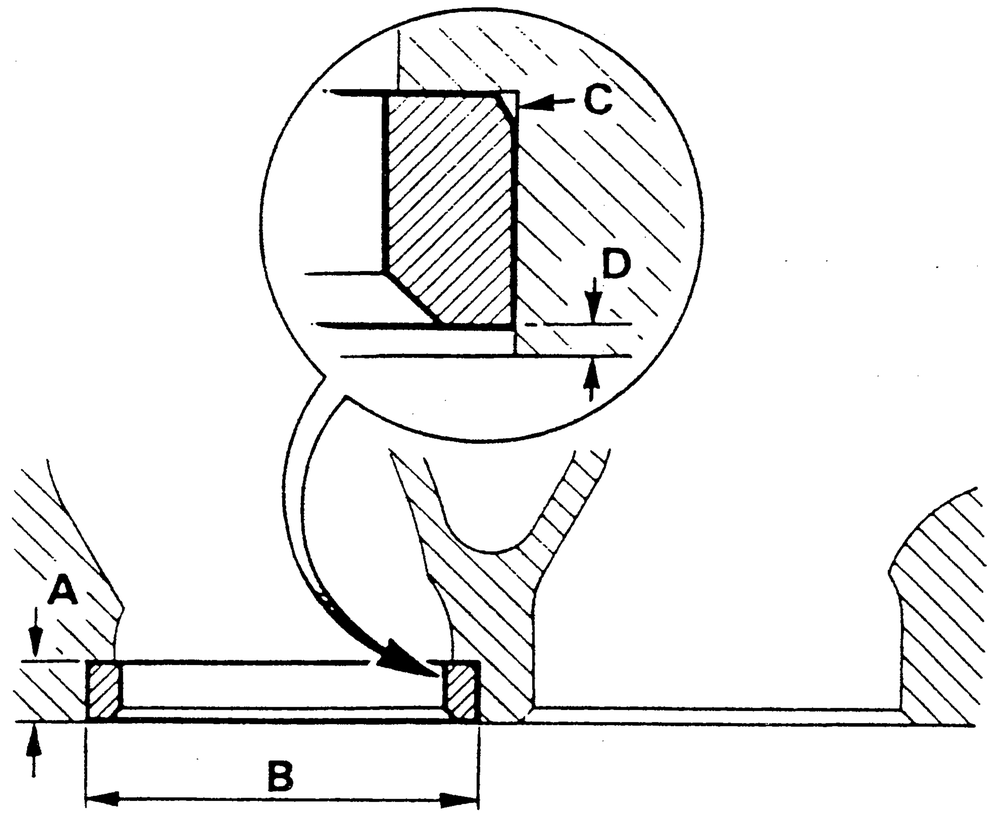

M6123-4

Valve seat inserts

A. Insert bore depth	5,72 to 6,60 mm (0.225 to 0.260 in)
B. Insert bore diameter	41,33 to 41,36 mm (1.6275 to 1.6285 in)
C. Radius at bottom of insert bore	0,13 to 0,18 mm (0.005 to 0.007 in)
D. Insert stand-down	0,13 to 0,33 mm (0.005 to 0.013 in)

Valve springs	**Inner**	**Outer**
Free length	45,7 mm (1.8 in)	57,1 mm (2.25 in)
Fitted length (valve open)	29,6 mm (1.16 in)	36,7 mm (1.44 in)
Load at fitted length (valve open)	178 N (18,1 kgf, 40 lbf)	400 N (40,8 kgf, 90 lbf)

Valves

Valve stem to guide clearance	0,025 to 0,064 mm (0.001 to 0.0025 in)
Valve face angle (inlet and exhaust)	45°

****Torque tightening figures**	**Nm**	**kgf m**	**lbf ft**
Exhaust manifold nuts	41	4,1	30
Inlet manifold bolts	41	4,1	30**

https://tractormanualz.com/

CYLINDER HEAD — TURBOCHARGED ENGINES.

—Decarbonise and valve grind TB12.29.19

Service tools: 18G 106 (or LC 6118 and LC 6118-6), 18G 228, 18G 228-1, 18G 29, 18G 284, 18G 284 AAH, LC 176

Hand tools: MS 150-8.5 MS 503, MS 642 and MS 655 are available to re-cut and narrow the valve seats.

Dismantling

1. Remove cylinder head. TB.12.29.11.
2. Remove inlet manifold and clean joint faces.
3. Remove exhaust manifold and clean joint faces.
4. Remove baffle board support and lifting eye; clean joint faces.
5. Remove cotter retaining clips (if fitted).
6. Compress each valve spring using tool 18G 106 (or LC 6118 and LC 6118-6) and remove cotters.
7. Remove collars and springs.
8. Remove oil seals and retainers from exhaust valves.
9. Remove thimbles from inlet valves and spring seats from exhaust valves.
10. Remove valves; maintaining their original order.
11. Remove carbon deposits from cylinder head, pistons and valves.

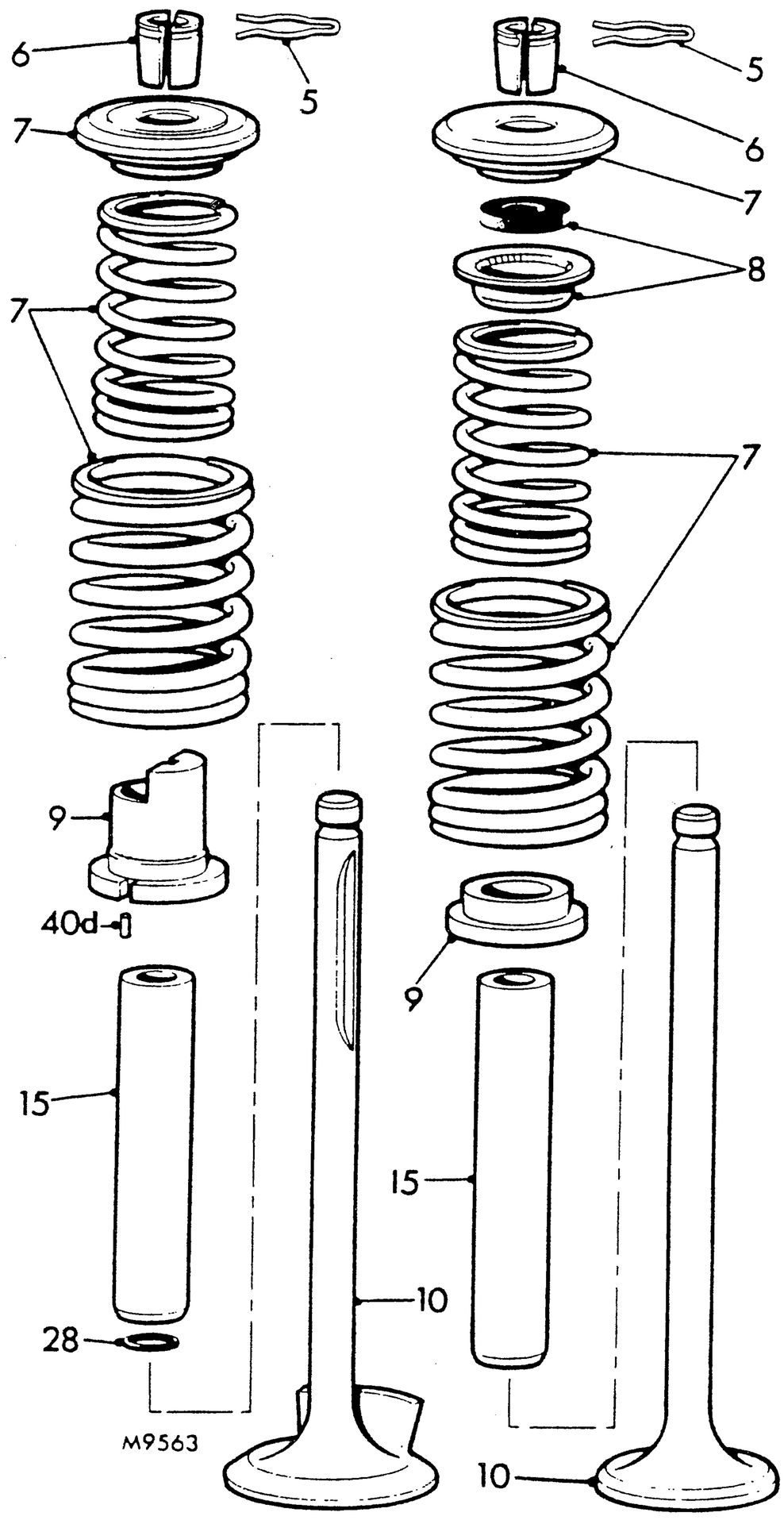

Inspection

12. Inspect cylinder head for major damage, and replace if necessary.
13. Check flatness of cylinder head bottom face and crankcase are within maximum stated in DATA; machine flat if required (see below).
14. Replace leaking or damaged injector sleeves. TB12.29.33 — additional work.
15. Check valve guides; renew if worn. TB:12.29.19/01 or/02.
16. Inspect valve stems for straightness or excessive wear and valve faces for pitting or burning; if necessary replace or regrind to the angle given in DATA.
17. Check each valve seat face; recondition or renew exhaust valve seat inserts. TB12.29.19/03.
18. Check valve springs; renew if not as specified in DATA.
19. Inspect core plugs for leaks and renew if required; replace if necessary using sealing/locking compound quoted in DATA.
    Ensure that plugs in top face of cylinder head are screwed in just below machined face.

continued

https://tractormanualz.com/

Valve seat reconditioning

20. Remove glazing from valve seats.
21. Re-cut seats, removing minimum amount of metal necessary to correct seat.
22. Narrow valve seats to limits in DATA, ensuring finished seat contacts mid portion of valve face.
23. Check stand-proud of each inlet valve head is within limits in DATA. If stand-proud is less than minimum allowed, even with a new valve fitted, machine the cylinder head face (see below).
24. Renew the seat inserts of exhaust valves with stand-proud less than minimum stated in DATA, even with a new valve fitted.
25. Lap valves to seats with fine grinding paste, using tool 18G 29.
    NOTE: If tool MS 642 has been used to re-cut the valve seats lapping of the valves should not be required.
26. Wash all traces of grinding paste from head and valves with suitable solvent.

Valve guide replacement — additional work

—Inlet	**TB12.29.19/01**
—Exhaust	**TB12.29.19/02**

27. Press or drive out the guide, using tool 18G 228.
28. Fit new O-ring into inlet valve guide, press in valve guide using tool 18G 228-1 and check stand-proud of valve guide is within limits quoted in DATA.
29. Re-cut valve seat to ensure concentricity with new guide.

Exhaust valve seat inserts — additional work TB12.29.19/03

If an exhaust valve seat cannot be restored by cutting, or the stand-proud of any valve is less than the minimum stated in DATA, even with a new valve fitted, the exhaust valve seat insert(s) must be replaced.

30. Remove insert, using tools 18G 284 and 18G 284 AAH.
31. Press in new insert, using tool LC 176.
32. Re-cut insert seat to ensure concentricity with valve sleeve.

continued

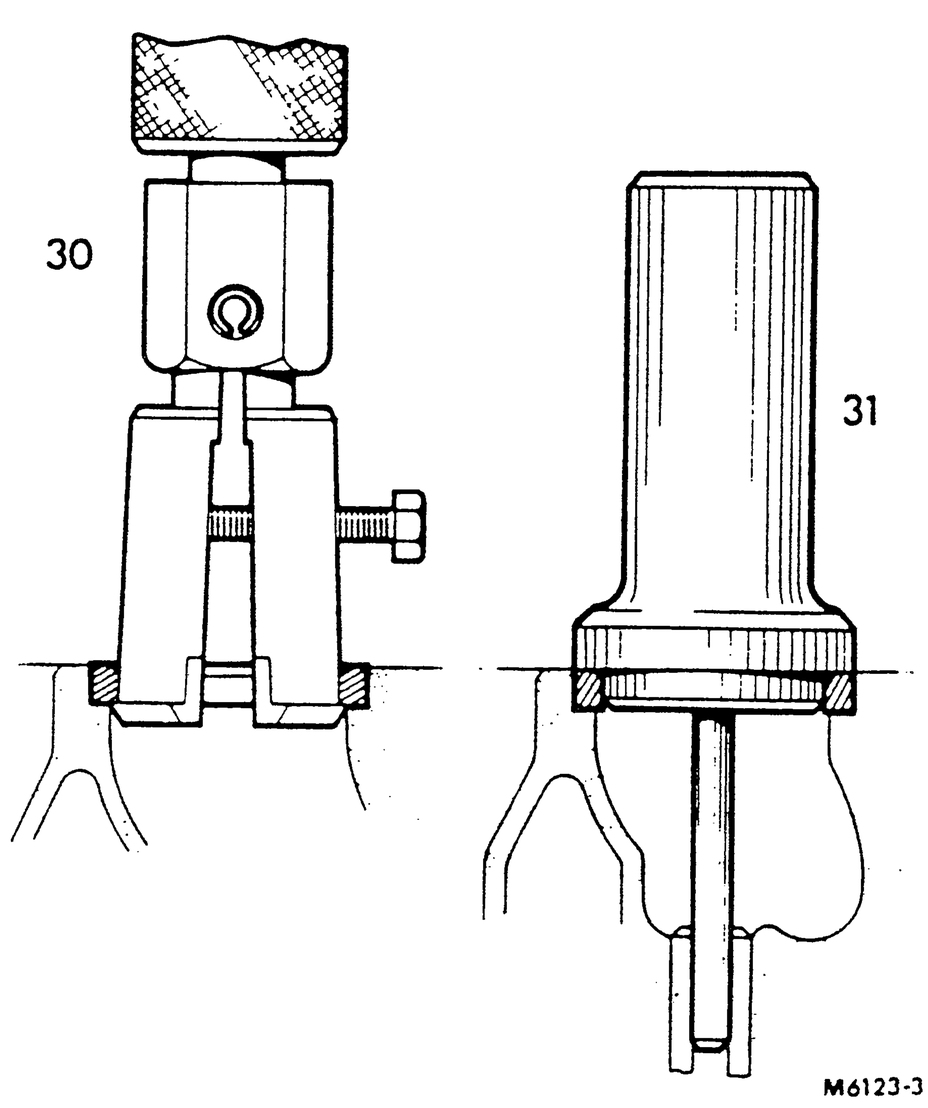

Machine cylinder head face — additional work

33. Check that sufficient metal may be removed to rectify fault, see DATA.
34. Remove exhaust valve seat inserts.
35. Skim cylinder head face maintaining minimum head depth specified in DATA.
36. Machine exhaust valve seat insert bores to dimensions in DATA.
37. Fit new exhaust valve seat inserts.
38. Re-cut the seat of any valve if its stand-proud is greater than the maximum in DATA.

Reassembling

39. Ensure water channels in cylinder head are clear.
40. Reverse procedure in 2 to 10, noting:
    a. Fit new gaskets and valve stem oil seals.
    b. Liberally apply the lubricant specified in DATA to the valve guide bores, valve stems when assembled and inlet valve retaining slots. Lubricate all other wearing surfaces with clean engine oil.
    c. Inlet valve stems and thimbles are machined for location.
    d. Locate slot in inlet valve thimble flange over its locating peg.
    e. Assemble springs with closed coils to cylinder head.
    f. Tighten exhaust manifold nuts and inlet manifold bolts to torque in DATA.
41. Refit cylinder head. TB12.29.11.

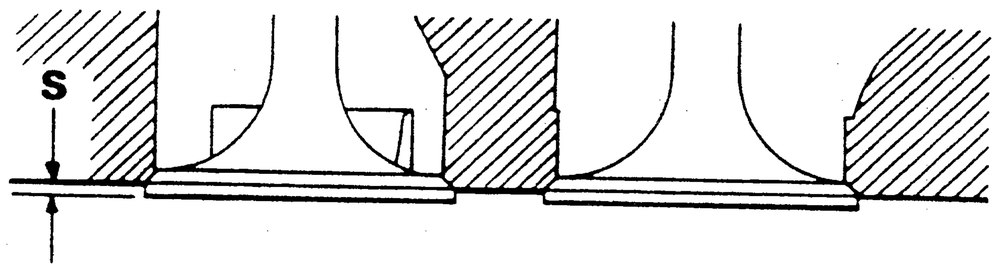

M6123-5

DATA

Cylinder head

Cylinder head/crankcase flatness:	
Longitudinal	± 0,04 mm (± 0.0015 in)
Traverse	± 0,013 mm (± 0.0005 in)
Cylinder head surface finish	1,1 micrometre (40 microinch) max.
Crankcase surface finish	1,8 micrometre (70 microinch) max.
Valve stand-proud 'S'	1,6 to 1,8 mm (0.062 to 0.072 in)
Valve seat angle (inlet and exhaust)	45°
Valve seat face width (at 45°)	1,40 to 1,78 mm (0.055 to 0.070 in)
Valve port nominal diameters:	
Inlet	40,4 mm (1.59 in)
Exhaust	34,5 mm (1.36 in)
Minimum cylinder head depth after machining	95,00 mm (3.74 in) i.e. 0,50 mm (0.020 in) maximum skim
Injector nozzle protrusion after machining	3,99 to 4,17 mm (0.157 to 0.164 in)
Inlet thimble locating dowel diameter	2,379 to 2,388 mm (0.0937 to 0.0940 in)
Height of dowel above face	3,3 to 4,0 mm (0.13 to 0.16 in)

Special lubricants and compounds

Core plug sealing/locking compound	Loctite 270 (threads should first be cleaned, primed using Loctite Primer Grade N then allowed to dry)
Valve guide bore and valve lubricant	Graphited oil (Acheson's Colloids 'Oildag')

continued

https://tractormanualz.com/

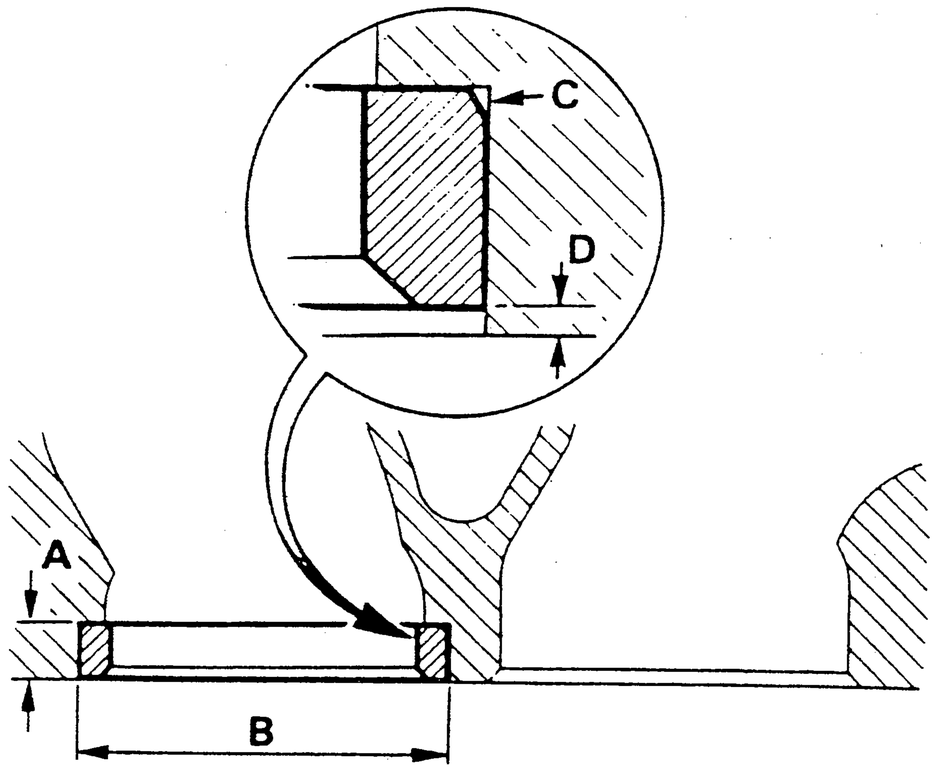

M6123-4

Valve seat inserts

A. Insert bore depth	5,72 to 6,60 mm (0.225 to 0.260 in)
B. Insert bore diameter	41,33 to 41,36 mm (1.6275 to 1.6285 in)
C. Radius at bottom of insert bore	0,13 to 0,18 mm (0.005 to 0.007 in)
D. Insert stand-down	0,13 to 0,33 mm (0.005 to 0.013 in)

Valve springs

	Inner	Outer
Free length	45,7 mm (1.8 in)	57,1 mm (2.25 in)
Fitted length (valve open)	29,6 mm (1.16 in)	36,7 mm (1.44 in)
Load at fitted length (valve open)	178 N (18,1 kgf, 40 lbf)	400 N (40,8 kgf, 90 lbf)

Valves

Valve stem to guide clearance	0,025 to 0,064 mm (0.001 to 0.0025 in)
Valve face angle (inlet and exhaust)	45°

Torque tightening figures

	Nm	kgf m	lbf ft
Exhaust manifold nuts	41	4,1	30
Inlet manifold bolts	41	4,1	30

https://tractormanualz.com/

INJECTOR SLEEVE

—Remove and refit TB12.29.33

Service tools: 18G 213 A, 18G 213 D, LC 173, LC 174

Removing

1. Drain cooling system. TB10.
2. Remove injector. TB19.60.01.
3. Grease plug of tool 18G 213 A and insert into injector sleeve.
4. Tap injector sleeve using tool 18G 213 A.
5. Fit extractor 18G 213 D and extract sleeve.
6. Remove sleeve from tool and plug from sleeve.

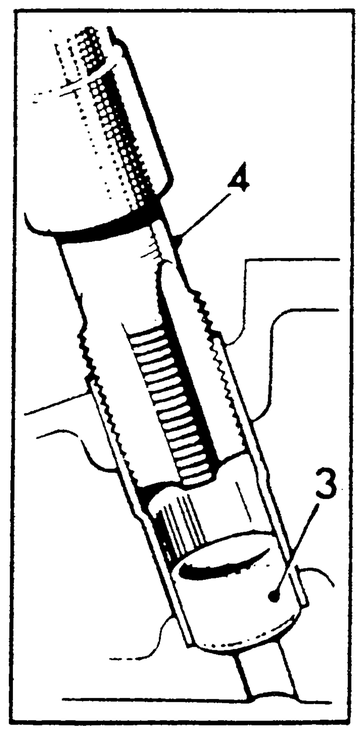

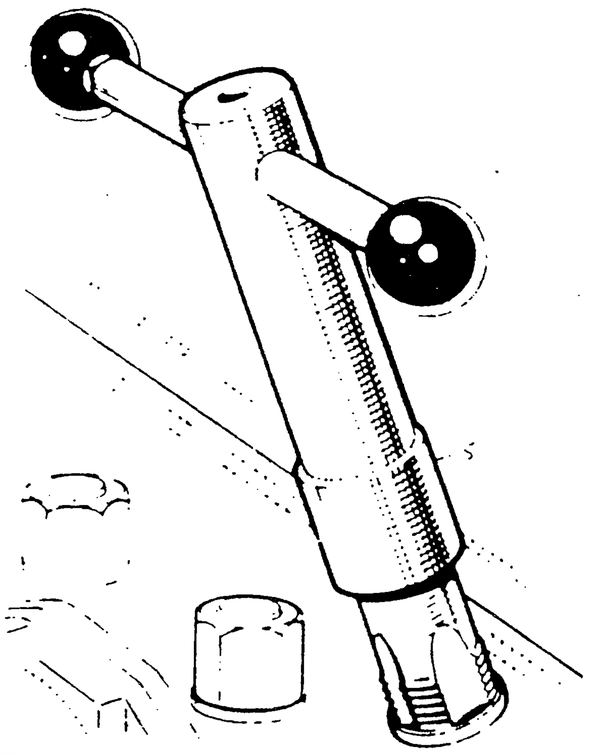

Refitting

NOTE: The top portion of the injector sleeves fitted to later tractors are sealed by an O-ring. Clean the O-ring groove and always fit a new O-ring but do not expand the top portion of the sleeve (instruction 12) when an O-ring is fitted.

7. Clean injector sleeve bore.
8. Insert new sleeve.
9. Position relative piston at B.D.C.
10. Insert tool LC 174 into injector sleeve. Expand lower portion of sleeve by applying a downward force and clockwise rotation to the spindle until a lessening of the force required indicates that the process is complete.
11. Withdraw tool by anti-clockwise rotation.
12. Insert tool LC 173 into sleeve, withdraw it 5 to 9 mm (0.25 to 0.40 in) and expand top portion of sleeve using same procedure as for bottom portion.
13. Refill cooling system. TB10.
14. Refit injector. TB19.60.01.

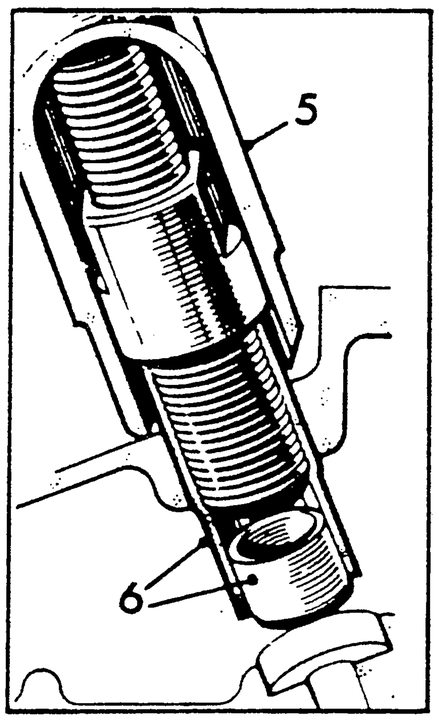

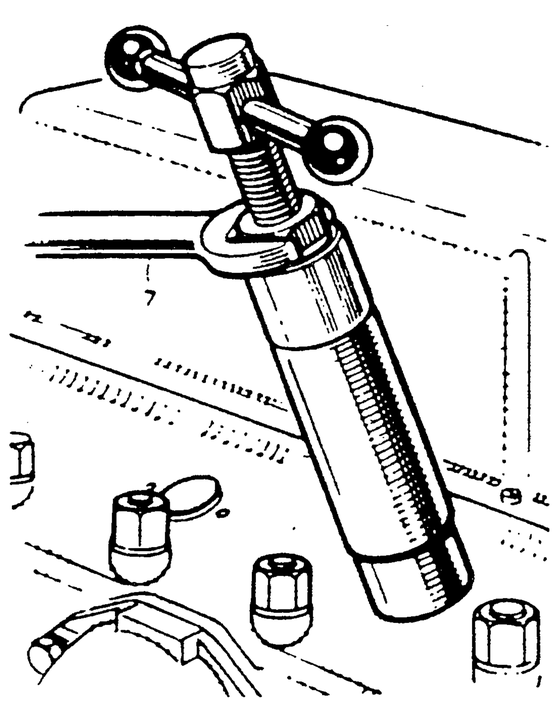

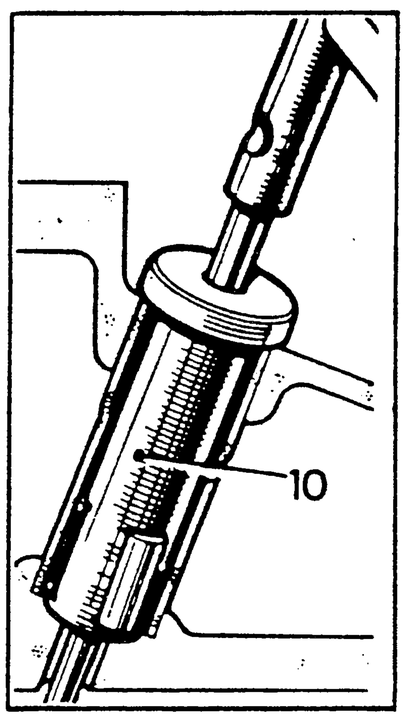

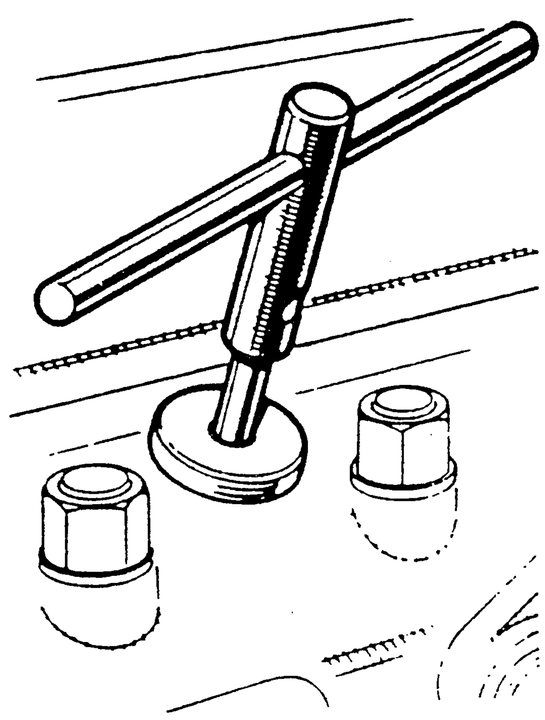

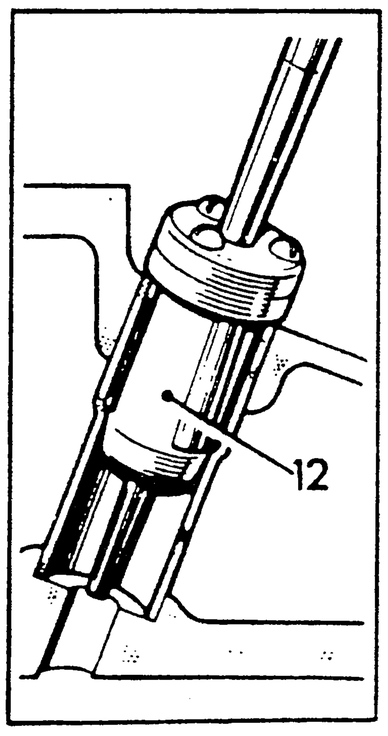

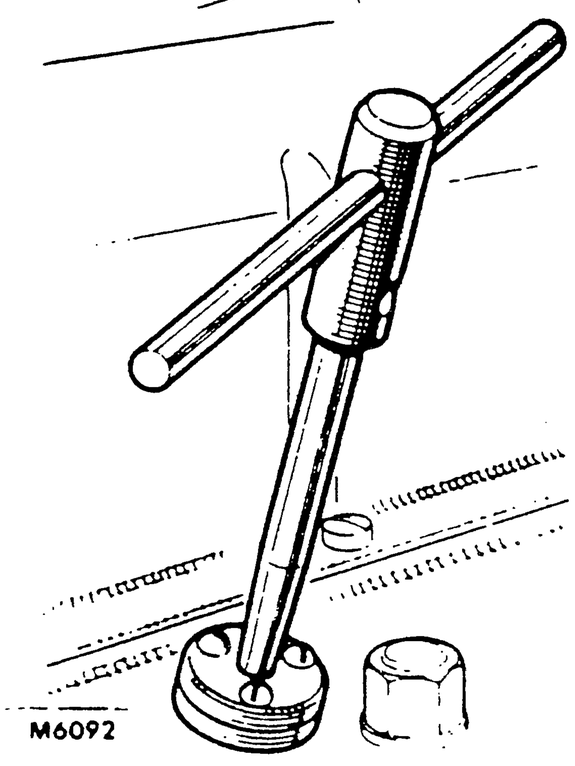

VALVE CLEARANCE

—Check and adjust TB12.29.48

Checking

** 1. Remove rocker cover and breather pipe.
NOTE: On turbocharged models the air inlet pipe must be removed.**

2. Check clearance between valve rocker arms and valve stems with a 0,35 mm (0.013 in) feeler gauge. The gauge should be sliding fit when the engine is hot or cold. Check clearance of each valve in the following sequence.

Check No. 1 valve with No. 8 valve fully open.
" " 3 " " " 6 " " "
" " 5 " " " 4 " " "
" " 2 " " " 7 " " "
" " 8 " " " 1 " " "
" " 6 " " " 3 " " "
" " 4 " " " 5 " " "
" " 7 " " " 2 " " "

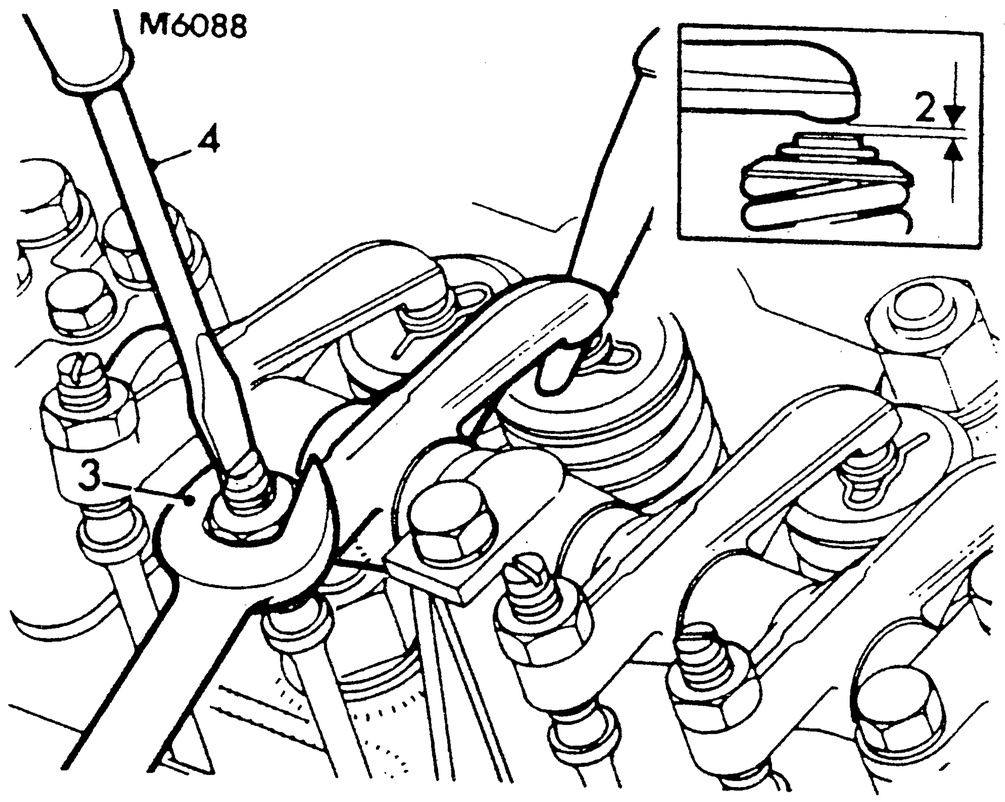

Adjusting

3. Slacken locknut.
4. Rotate screw, clockwise to decrease or anti-clockwise to increase clearance.
5. Re-tighten locknut when clearance is correct, holding screw to prevent it rotating.
6. Check clearance to ensure it did not alter when locknut was tightened.
7. Refit rocker cover, renewing the gasket if required.

ROCKER SHAFT ASSEMBLY

—Remove and refit TB12.29.54

Removing

1. Remove rocker cover.
2. Gradually release bolts holding rocker shaft assembly to cylinder head.
3. Remove rocker shaft assembly.

Refitting

4. Position rocker shaft, ensuring each end of the shaft has its plug fitted.
5. Fit bolts but enter first two threads only.
6. Locate clearance adjusting screws in push-rod cups, lifting the rocker shaft as required.
7. Tighten bolts evenly to torques in DATA.
8. Check and adjust valve clearances. TB12.29.48.
9. Refit rocker cover, ensuring the gasket is serviceable.

DATA

Torque tightening figures	Nm	kgf m	lbf ft
9,5 mm (3/8 in) diameter bolts	40	4	30
** 8 mm (5/16 in) diameter bolts	23	2,3	17**

https://tractormanualz.com/

ROCKER SHAFT ASSEMBLY

—Overhaul TB12.29.55

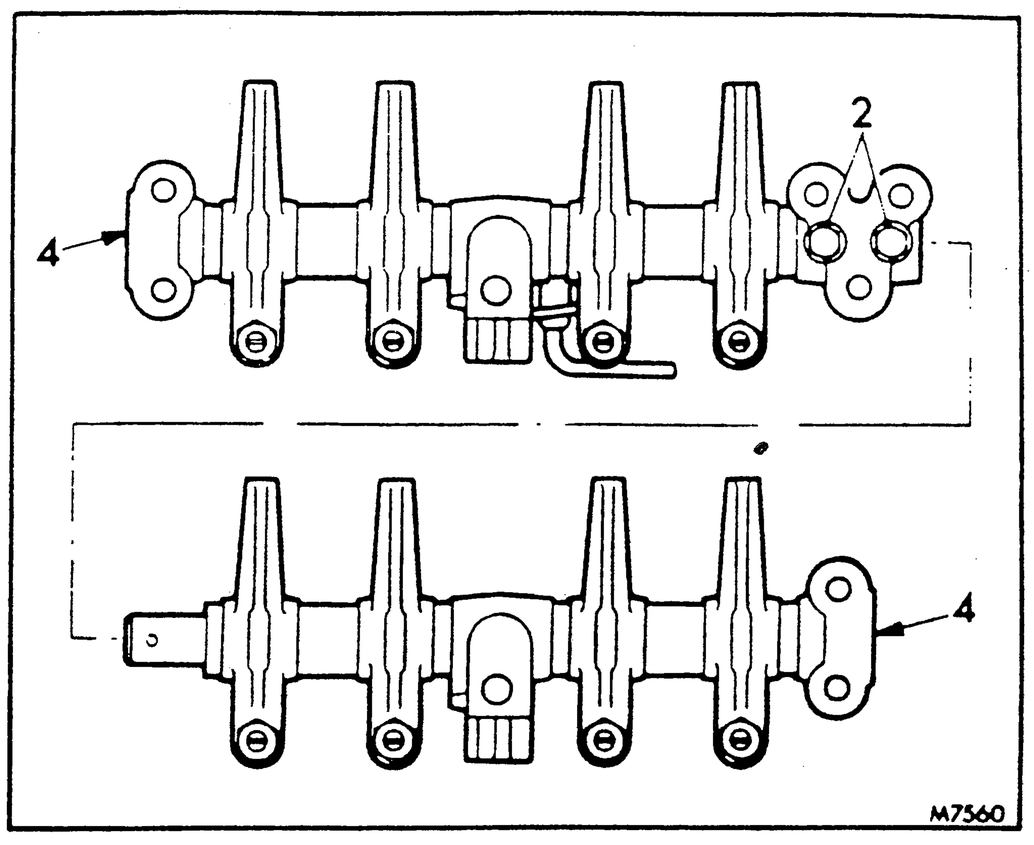

Dismantling

1. Remove valve rocker shaft assembly. TB12.29.54.
2. Remove rocker shaft locating screws and separate the sections of the shaft.
3. Remove components from shafts, maintaining their original order.
4. Remove plugs from outer ends of rocker shaft section.
5. Remove adjusting screws from rockers.
6. Remove, clean and inspect rocker shaft oil pressure relief valve. TB12.60.57.
   NOTE: On later engines a plain overflow pipe replaces the relief valve; it should be removed and cleaned.

Inspection

7. Clean parts and ensure oilways are clear.
8. Visually inspect, and replace any part showing wear or damage.
9. Check dimensions and clearances specified in DATA, and replace worn parts.

Reassembling

10. Reverse procedure in 1 to 6, noting:
    a. Ensure plugs are fitted in outer ends of rocker shaft sections.
    b. Lubricate all parts with clean engine oil before assembly.
    c. Ensure locating screws engage holes in rocker shafts.

DATA

Rocker gear

Rocker shaft diameter	18,23 to 18,242 mm (0.7177 to 0.7182 in)
Rocker shaft clearance	0,025 to 0,064 mm (0.001 to 0.0025 in)
Rocker shaft distance collar thickness:	
Between each pair of rockers	20,46 to 20,64 mm (0.8055 to 0.8125 in)
Between rockers and remaining brackets	6,17 to 6,35 mm (0.243 to 0.25 in)

https://tractormanualz.com/

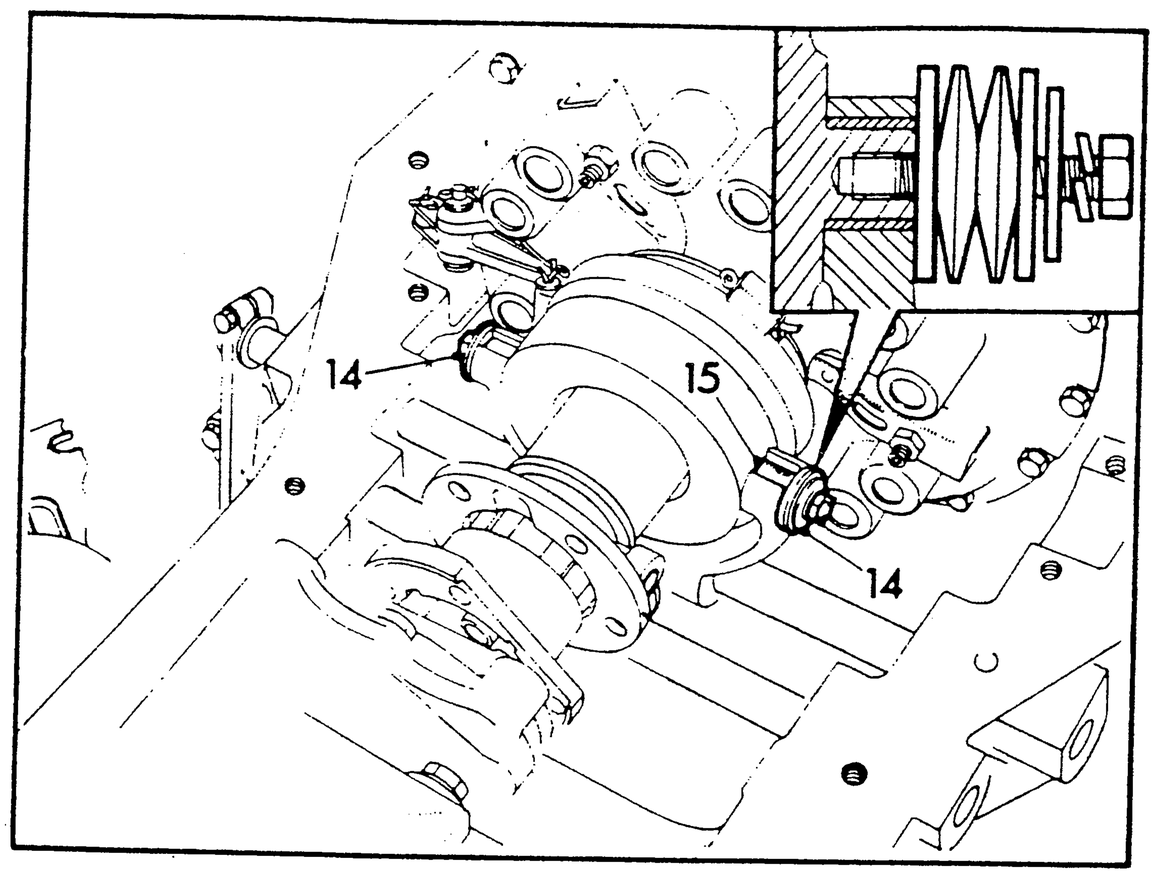

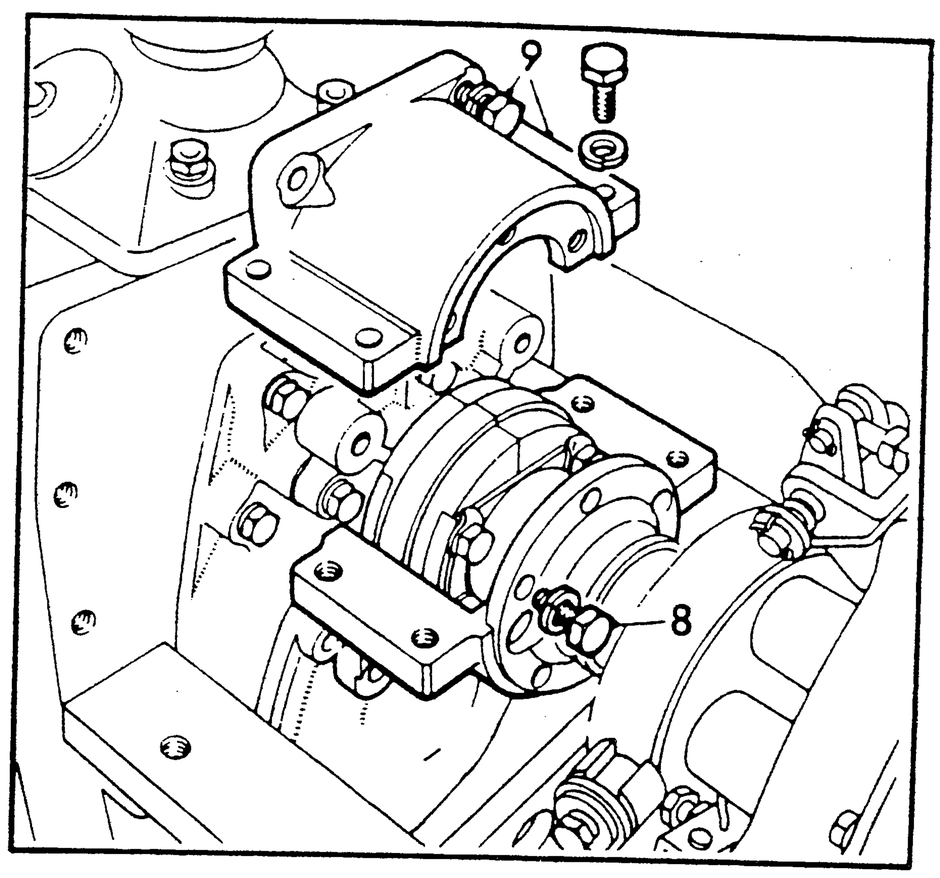

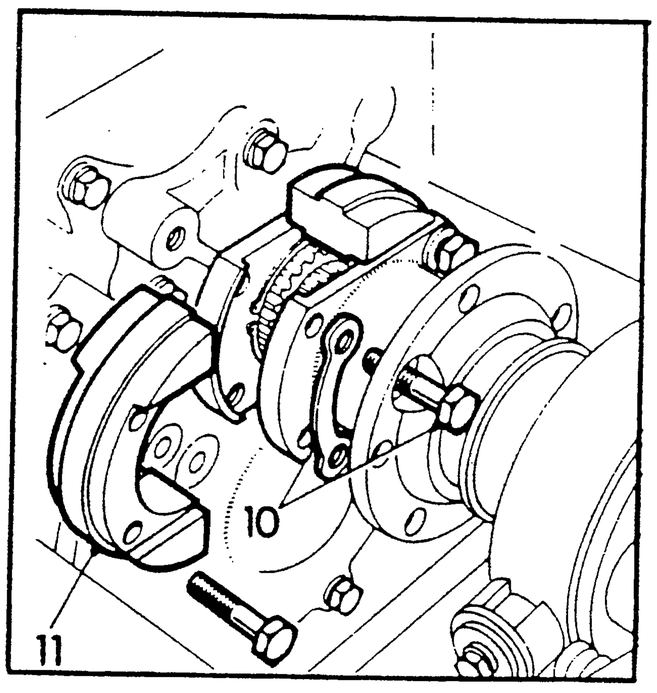

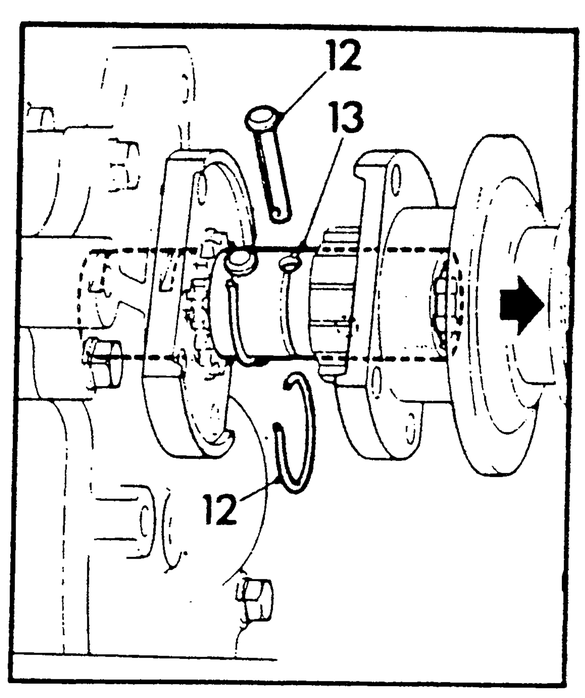

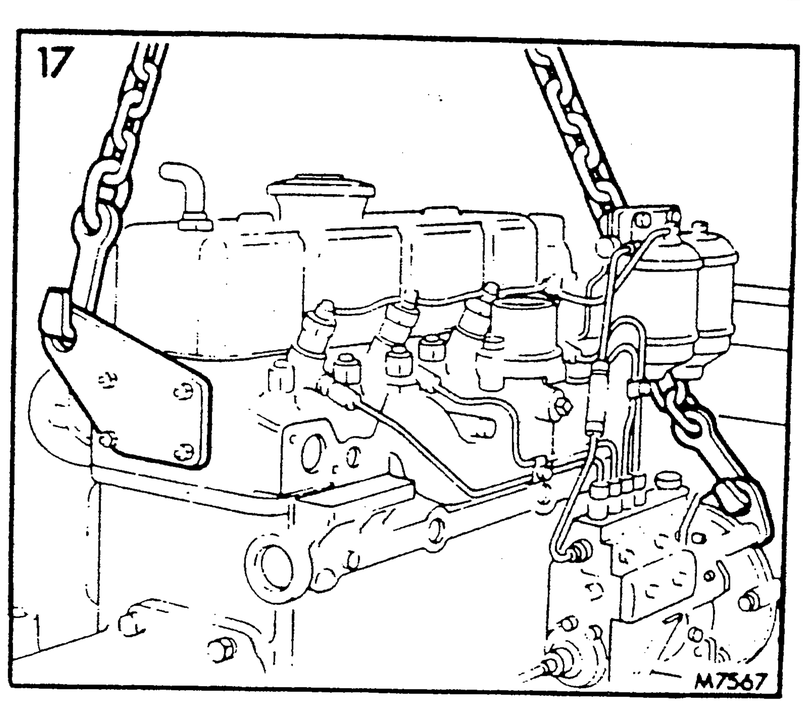

ENGINE ASSEMBLY

—Remove and refit

TB12.41.01

Removing

1. Drain engine oil.
2. Remove radiator and frame, see TB12.65.01.
3. Remove cab. TB76.10.01.
4. Disconnect wires from alternator and temperature transmitter, remove plastic ties and draw wiring harness to right-hand side of engine.
5. Remove plastic ties from starter motor cables and disconnect starter motor, noting positions of cables.
6. Remove wooden baffle board from support plate at rear of cylinder head.
7. Remove clutch housing cover.
8. Remove the five bolts securing clutch withdrawal carrier to carrier bracket assembly.
9. Remove the top half of the carrier bracket.
10. Release locking tabs and remove bolts securing power take-off driving flange to driven flange.
    NOTE: Position the large hole in the flange of the clutch withdrawal carrier over each bolt in turn as they are removed.
11. Move driving flange forward and remove the two halves of the driving dog which is numbered for correct assembly. Note that the numbers face the engine.
12. Remove retaining rings and withdraw pins securing driving sleeve.
13. Slide driving sleeve toward engine.
14. Remove setscrews and washer packs from main clutch release fork, noting arrangement of washers.
15. Carefully lever out bushes from clutch release fork.
16. Remove the three bolts securing engine to main frame and slacken nut at right-hand rear mounting.
17. Attach suitable overhead lifting equipment to engine lifting eyes and take weight of engine.
18. Raise engine slightly, remove nut from right-hand rear mounting, lift engine out of frame, move to work area, lower onto suitable packing and remove lifting equipment.

continued

https://tractormanualz.com/

Refitting

19. Attach lifting equipment to engine lifting eyes and lift into position, noting that the nut at the right-hand rear mounting must be fitted before the engine is fully lowered and ensuring that the clutch release forks are correctly located. Remove lifting equipment.
20. Fit bolts securing engine to frame and tighten to torque in DATA; tighten nut at right-hand rear mounting.
21. Slide driving sleeve rearward and secure with pins and rings.
22. Fit both halves of driving dog, ensuring stamped numbers are toward engine and paired to the numbers on the driving flange.
23. Fit bolts to coupling, tighten and lock with tabs.
24. Fit setscrews securing withdrawal carrier to lower half of carrier housing but do not tighten.
25. Position top half of carrier, then fit and tighten all setscrews.
26. Fit bushes to main clutch fork.
27. Fit washer packs and setscrews to main clutch fork.
28. Fit clutch cover, sealing rubber and inspection cover (if removed).
29. Fit wooden baffle board.
30. Connect wires to alternator and temperature transmitter and secure harness with plastic ties.
31. Connect wires to starter motor and secure harness to solenoid with a plastic tie.
32. Fill engine with oil.
33. Refit cab. TB76.10.01.
34. Refit radiator and frame, see TB12.65.01.

DATA

Torque tightening figures	Nm	kgf m	lbf ft
Engine to main frame bolts	130	13,3	96

ENGINE

—Tune TB12.49.01

1. Remove, test and refit injectors. TB19.60.01.
2. Change fuel filter element. TB19.25.07.
3. Check and adjust valve clearances. TB12.29.48.
4. Remove air cleaner element and clear, wash or renew as required, see TB10.
5. Remove injection pump, check timing and refit. TB19.30.07.

https://tractormanualz.com/

FLYWHEEL

—Remove and refit

Starter ring gear	TB12.53.19
Spigot bearing	TB12.53.20

Removing flywheel

1. Remove clutch. TB33.10.01.
2. Release lockplates from bolts.
3. Remove bolts, lockplates and bearing retainer.
4. Draw flywheel from crankshaft, using two $\frac{3}{8}$ in U.N.F. bolts screwed into the threaded extractor holes.
5. Remove extractor bolts from flywheel and remove flywheel.

Starter ring gear

6. Drill a hole into the ring gear in line with the root between two teeth.
   NOTE: Do not drill through the ring into the flywheel.
7. Split ring gear across hole, using a hammer and chisel.
8. Check mating surfaces of ring gear and flywheel are clean and free from burrs.
9. Heat ring gear uniformly to 275°C (527°F).
   CAUTION: Heating ring gear above 275°C (527°F) will affect its temper and soften the steel.
10. Fit ring gear squarely onto flywheel, bore chamfer leading, and press or tap it firmly against the shoulder using a piece of hardwood. Allow to cool naturally.

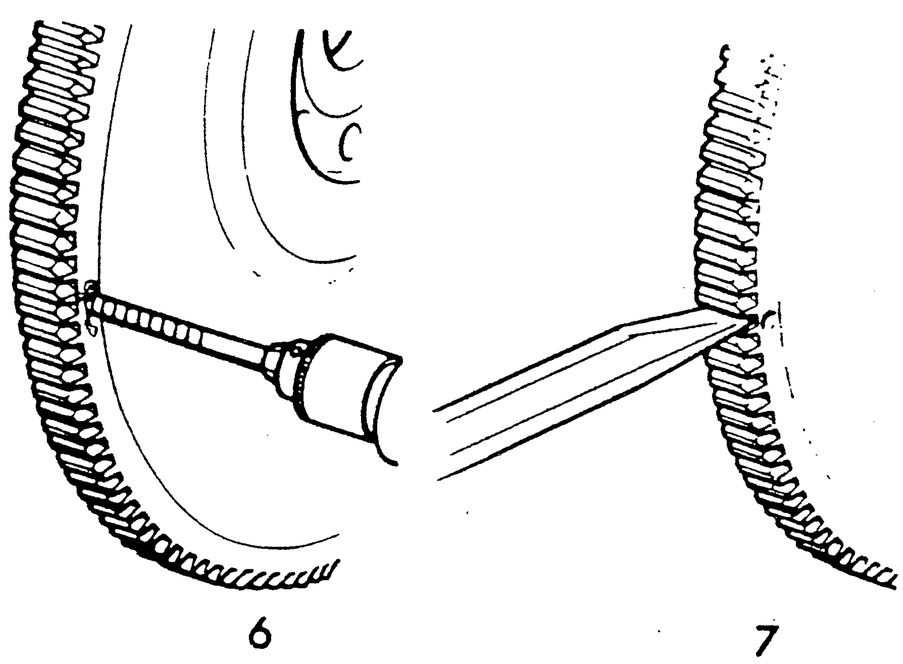

Spigot bearing

11. Drive or press the bearing from the flywheel.
12. Refit bearing to flywheel.

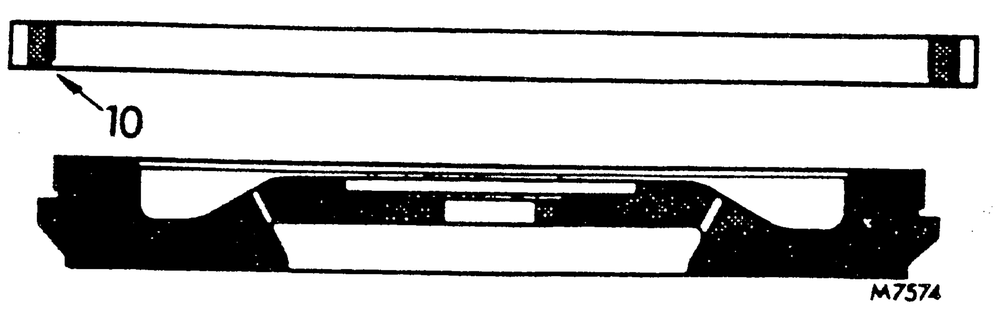

Refitting flywheel

13. Refit flywheel to crankshaft, noting that it may only be fitted in one position.
14. Fit bearing retainer, new lockplates and bolts. Tighten bolts evenly to torque in DATA and lock in position.
15. Refit clutch. TB33.10.01.

DATA

Torque tightening figures

	Nm	kgf m	lbf ft
Flywheel bolts	136	13,8	100

https://tractormanualz.com/

OIL FILTER ELEMENT

—Remove and refit TB12.60.02

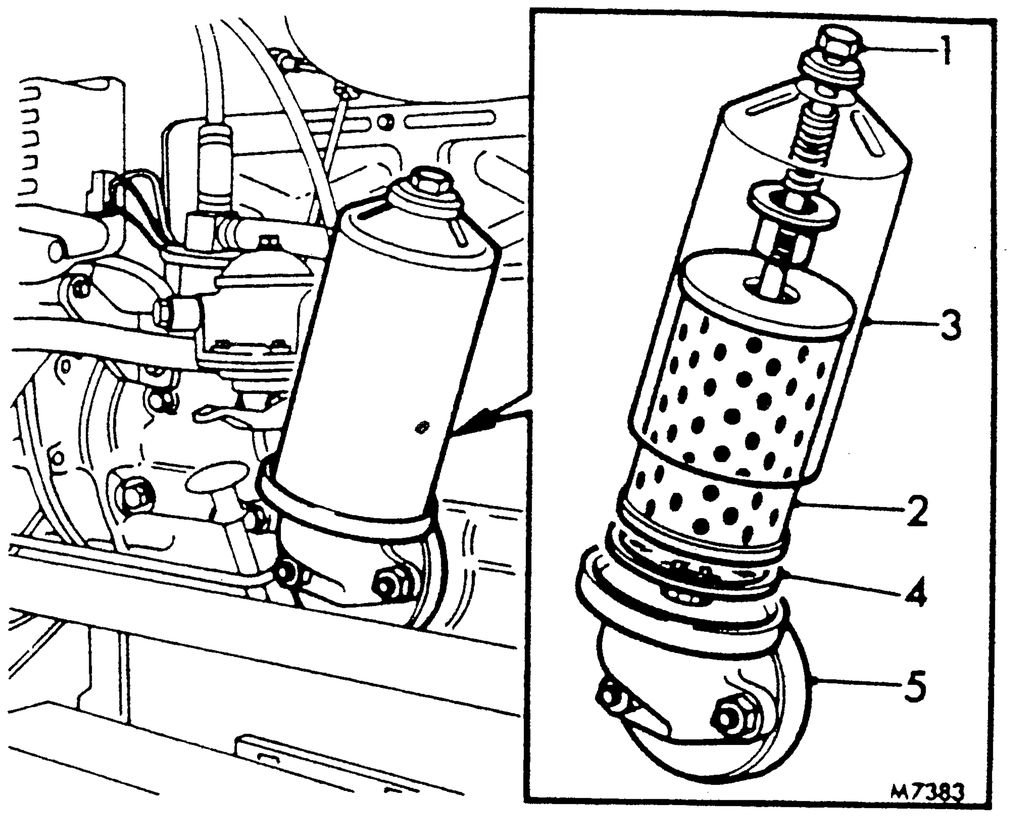

Removing

1. Unscrew centre bolt and detach bowl.
2. Discard oil.
3. Remove element.
4. Remove sealing ring from filter head.
5. Wash filter bowl and components in a suitable solvent and dry thoroughly.

Refitting

6. Fit new seal to filter head.
7. Fit new element in bowl.
8. Refit bowl to head, ensure it locates correctly against the seal; tighten bolt to torque in DATA.
9. Start engine and check that oil pressure gauge registers within 30 seconds.
10. Clean outside of filter and check for oil leaks.
11. Stop engine, wait for oil to drain into sump then top up sump to 'MAX' mark on dipstick.

DATA

Torque tightening figures	Nm	kgf m	lbf ft
Bowl retaining bolt	12 to 13	1,2 to 1,3	9 to 10

https://tractormanualz.com/

OIL PUMP

—Remove and refit **TB12.60.26**

Service tool: 18G 1185

Removing

1. Remove crankshaft balancer. TB12.21.06.
2. Remove No. 1 main bearing nuts, using tool 18G 1185, and remove oil pump and bearing cap, noting:
   a. Shims are inserted between the oil pump and bearing cap.
   b. Check that bearing half and thrust washer lower halves come away with the bearing cap, and maintain their relative positions.

NOTE: Do not carry out instructions 3 and 4 unless the pump is to be renewed or overhauled.

3. Remove oil strainer and suction pipe from oil pump.
4. Remove split pin and nut and withdraw gear using a suitable puller.

Refitting

5. Reverse removing procedure, noting:
   a. Tighten drive shaft nut to torque in DATA.
   b. Clean strainer.
   c. Clean joint faces of suction pipe and use a new gasket.
   d. Clean bearing surfaces and lubricate with engine oil.
   e. Fit thrust washers with their grooved faces toward the crankshaft thrust faces.
   f. Ensure timing marks on the oil pump gear and crankshaft gear are aligned and check oil pump gear backlash is within limits in DATA.
   NOTE: The backlash is adjusted by shims between the oil pump and bearing cap.
   g. Tighten main bearing nuts to torque in DATA, using tool 18G 1185, ensuring that the latest type of washers are fitted, see Parts List, and the threads are lubricated with clean engine oil.
   h. Check crankshaft end-float, see DATA, using a dial gauge.

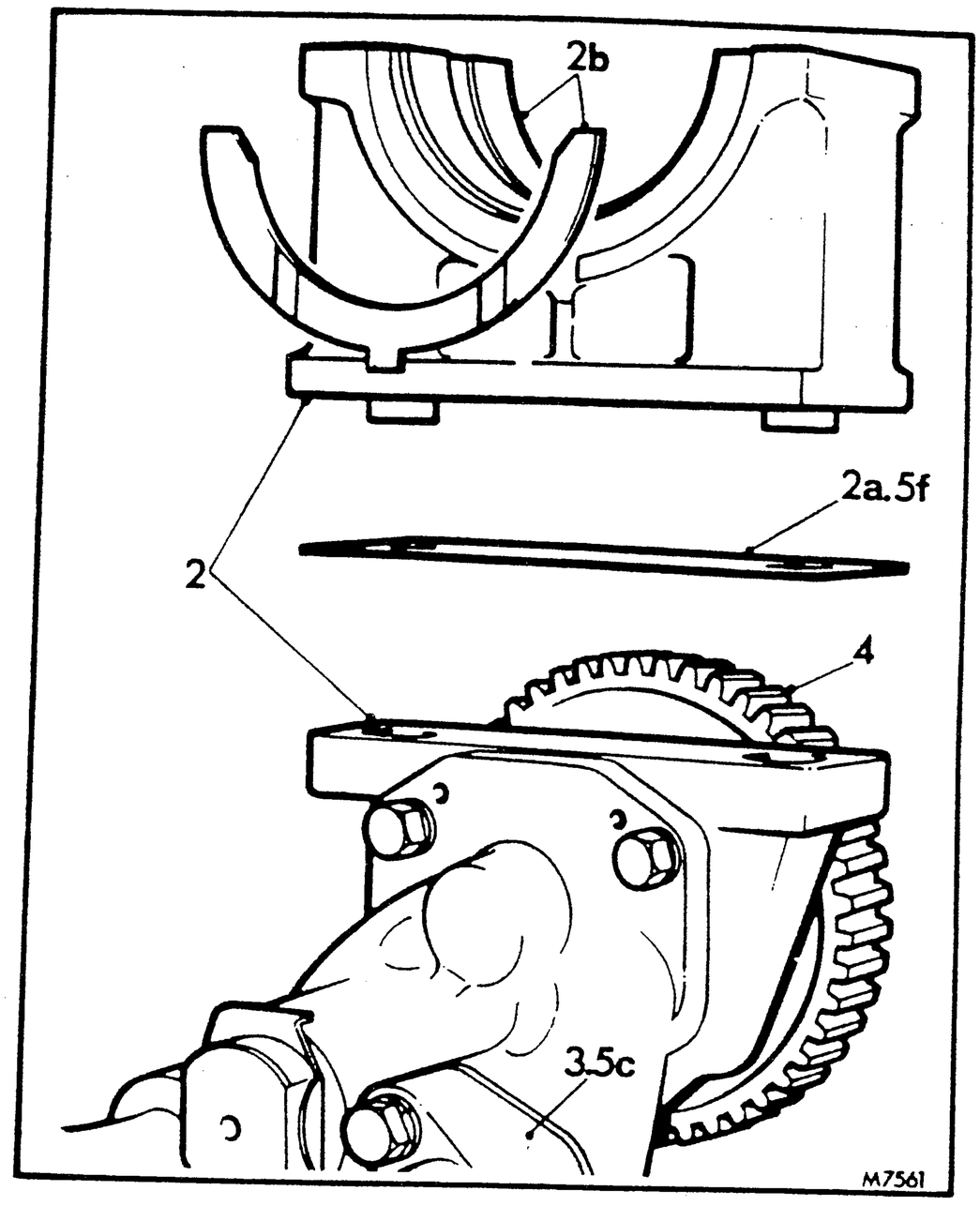

DATA

Oil pump

Drive gear backlash	0,08 to 0,15 mm (0.003 to 0.006 in)

Crankshaft

End-float	0,20 to 0,38 mm (0.008 to 0.015 in)

Torque tightening figures

	Nm	kgf m	lbf ft
Drive shaft nut	102	10,4	75
** Main bearing nuts (lubricated thread)	163	16,6	120**

https://tractormanualz.com/

OIL PUMP

–Overhaul TB12.60.32

Service tool: 18G 2

Dismantling

1. Remove oil pump. TB12.60.26.
2. Detach cover from body.
   CAUTION: The cover is located on the body by two dowels.
3. Remove rotors from pump body.
4. Remove relief valve plug and washer.
5. Withdraw spring and relief valve.

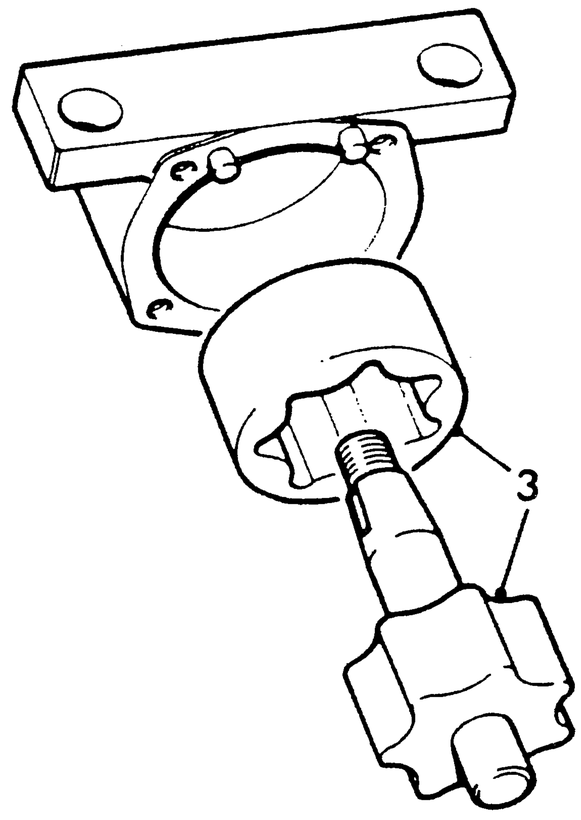

Inspection

6. Clean all components and inspect for obvious damage; replace parts as required.
7. Check drive shaft clearance in pump body.
8. Install rotors in pump body, ensuring chamfered edge of outer rotor is innermost in the pump body.
9. Check end-float of rotors.
10. Check rotor lobe clearances.
11. Renew pump assembly if end-floats or clearances measured in instructions 7 to 10 exceed the figures in DATA.
12. Check relief valve for pitting and correct seating; renew if required.
13. Check relief valve spring free length and load to compress to fitted length (see DATA); renew if required.

continued

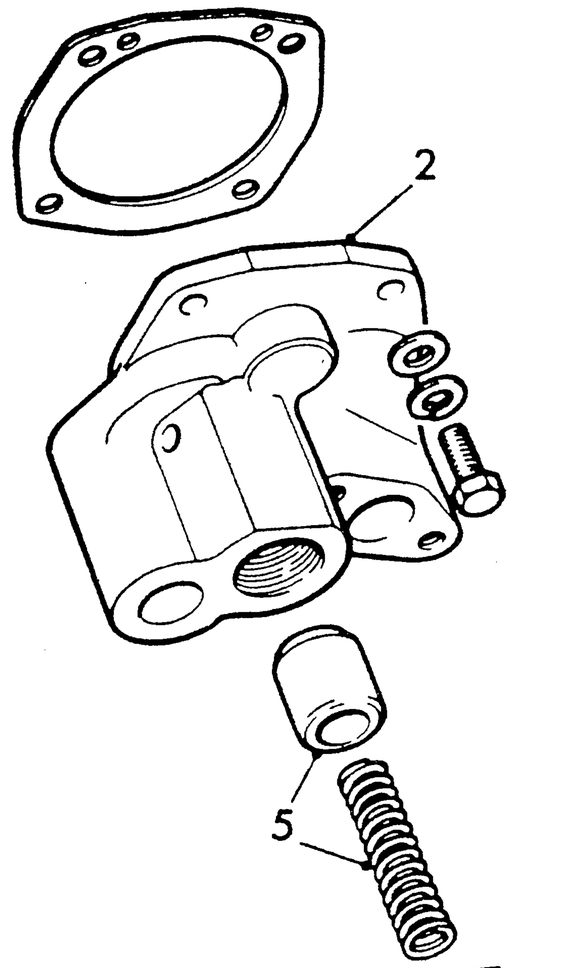

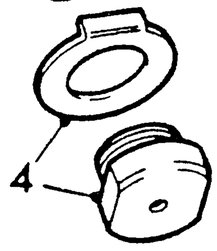

M7568-1

https://tractormanualz.com/

Reassembling

14. Lubricate all parts with clean engine oil before assembly.
15. Reverse procedure in 2 to 5, noting:
    a. Ensure chamfered edge of outer rotor is innermost in the pump body.
    b. The early pump or drive gear with keyways can be replaced by those without keyways and the key omitted.
16. Check pump for freedom of rotation.
17. Fit pump. TB12.60.26.

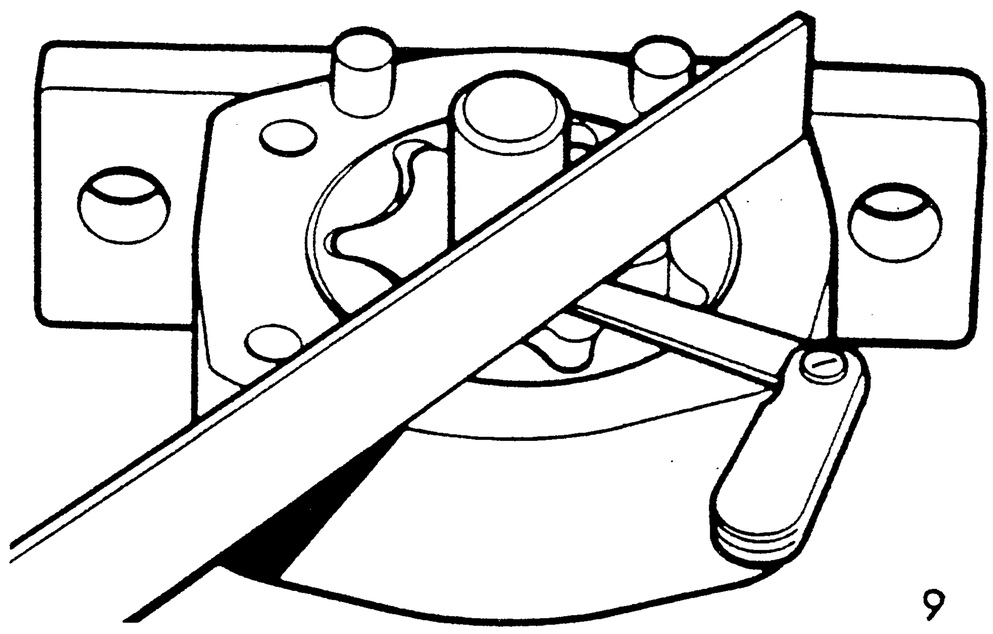

9

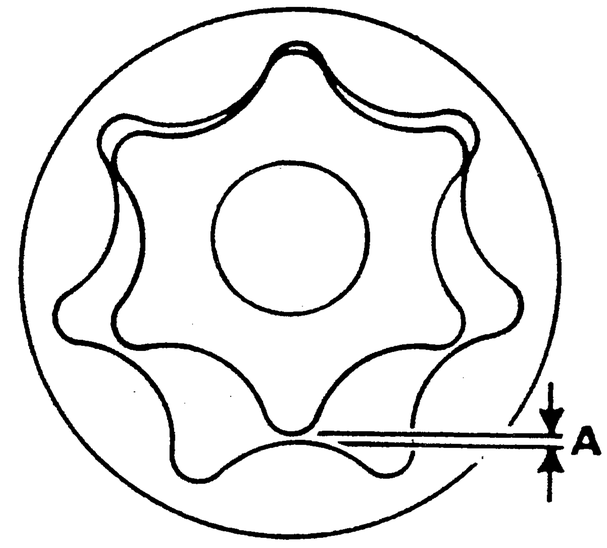

10

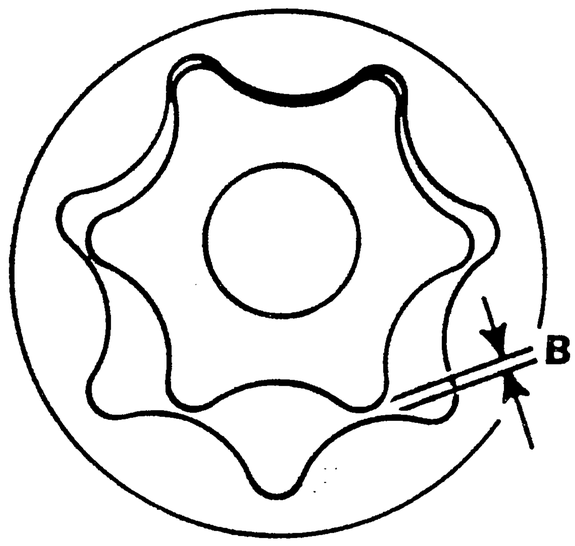

M7568-2

DATA

Pump rotors

**Drive shaft clearance in pump body	0,142 mm (0.0056 in) maximum
End-float of each rotor	0,05 to 0,1 mm (0,002 to 0.0045 in)
Lobe clearance 'A'	0,2 mm (0.008 in) maximum
Lobe clearance 'B'	0,15 mm (0.006 in) maximum

Relief valve spring

Free length	57 mm (2.25 in)
Fitted length	50 mm (2 in)
Load at fitted length	52,5 N (5,3 kgf, 11.75 lbf)
Relief valve blow-off pressure	415 kN/m² (4,2 kgf/cm², 60 lbf/in²) nominal

https://tractormanualz.com/

OIL SUMP

—Remove, clean and refit **TB12.60.44**

Removing

1. Remove left-hand side panel and disconnect earth lead from battery negative (—) terminal.
2. Remove plug and drain the oil into a suitable container.
3. Turn road wheels to full left lock.
4. Remove setscrews and lower sump.
5. Clean joint faces and inside of sump.

Refitting

6. Reverse removing procedure, using a new gasket and coating both sides of the gasket with the jointing compound specified in DATA.

DATA

Special lubricants and compounds

Jointing compound for sump	Hylomar

OIL PRESSURE RELIEF VALVE — MAIN

—Remove and refit **TB12.60.56**

Removing

1. Remove oil sump. TB12.60.44.
2. Release tab washer and remove plug and washer.
3. Withdraw spring and relief valve.
4. Check valve for pitting and correct seating; renew if required.
5. Check spring free length and load to compress to fitted length (see DATA); renew if required.

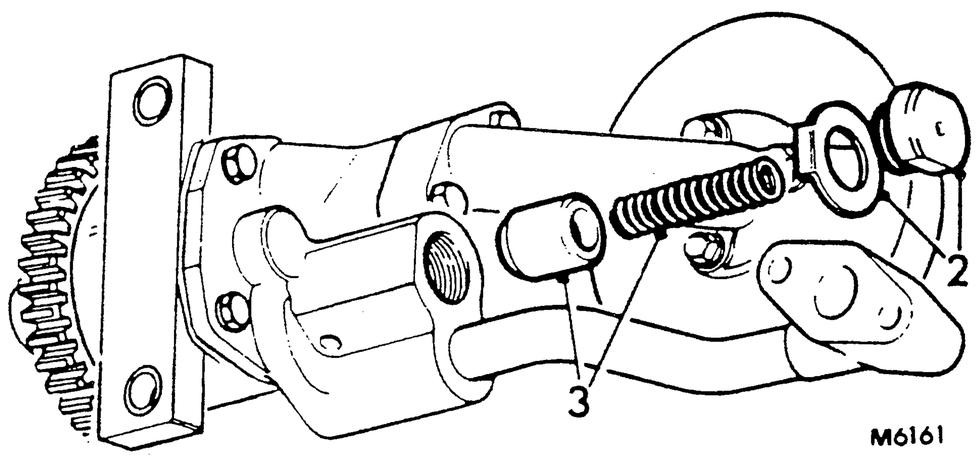

M6161

Refitting

6. Reverse procedure in 1 to 3.

DATA

Relief valve spring

Free length	57 mm (2.25 in)
Fitted length	50 mm (2 in)
Load at fitted length	52,5 N (5,3 kgf, 11.75 lbf)

Engine oil pressure	**kN/m²**	**kgf/cm²**	**lbf/in²**
At idling speed (hot)	103 to 172	1,05 to 1,76	15 to 25
At maximum speed (hot)	379 to 448	3,87 to 4,57	55 to 65

https://tractormanualz.com/

OIL PRESSURE RELIEF VALVE – ROCKER SHAFT – EARLY MODELS ONLY

–Remove and refit TB12.60.57

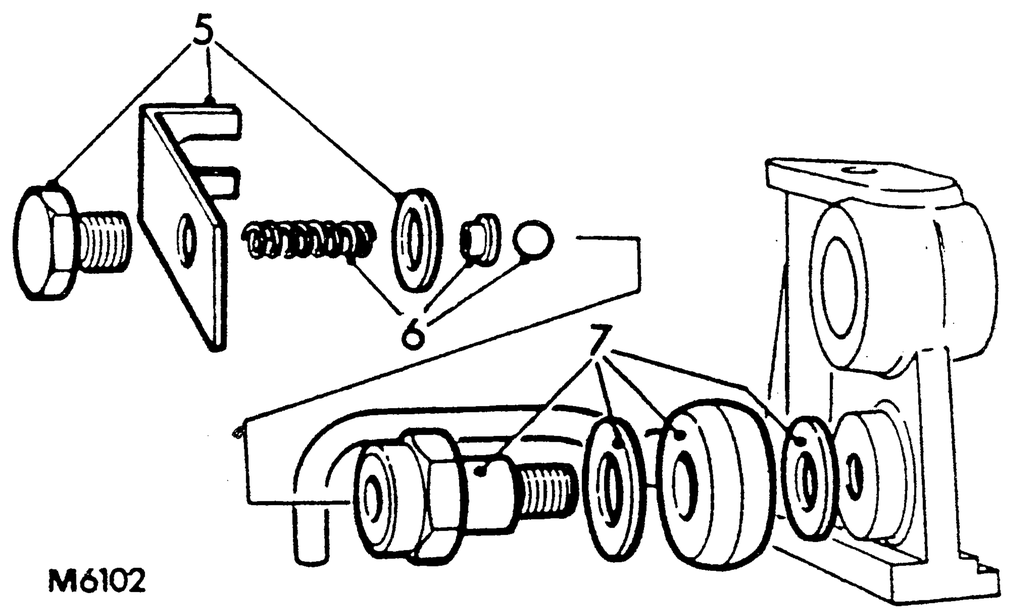

M6102

Removing

1. Remove rocker cover.
2. Unlock Nos. 1 to 4 valve clearance adjusting screws and slacken as far as possible.
3. Remove bolts securing first and second pedestals, slacken bolts of third pedestal.
4. Remove locating screw and detach front section of rocker shaft.
5. Release tab washer and remove plug, tab washer and copper washer.
6. Withdraw spring, spring seat and ball.
7. Unscrew valve body and remove banjo and copper washers.
8. Check spring and ball to figures in DATA and ensure valve seat in body is in good condition.

Refitting

9. Fit valve body and banjo, using new copper washers.
10. Insert ball, spring seat and spring into body.
11. Fit plug, using a new copper washer and tab washer; lock plug with tab.
12. Refit front section of rocker shaft and insert locating screw.
13. Fit bolts securing rocker shaft and tighten to torque in DATA.
14. Check and adjust valve clearances. TB12.29.48.
15. Refit rocker cover, ensuring gasket is serviceable.

DATA

Rocker shaft oil pressure valve

Spring free length	19 mm (0.75 in)
Load to compress spring to 16 mm (0.625 in)	85 gf (3 ozf)
Diameter of ball	6 mm (0.236 in)

Torque tightening figures	**Nm**	**kgf m**	**lbf ft**
9.5 mm (⅜ in) diameter bolts	40	4	30
** 8 mm (5/16 in) diameter bolts	23	2.3	17**

https://tractormanualz.com/

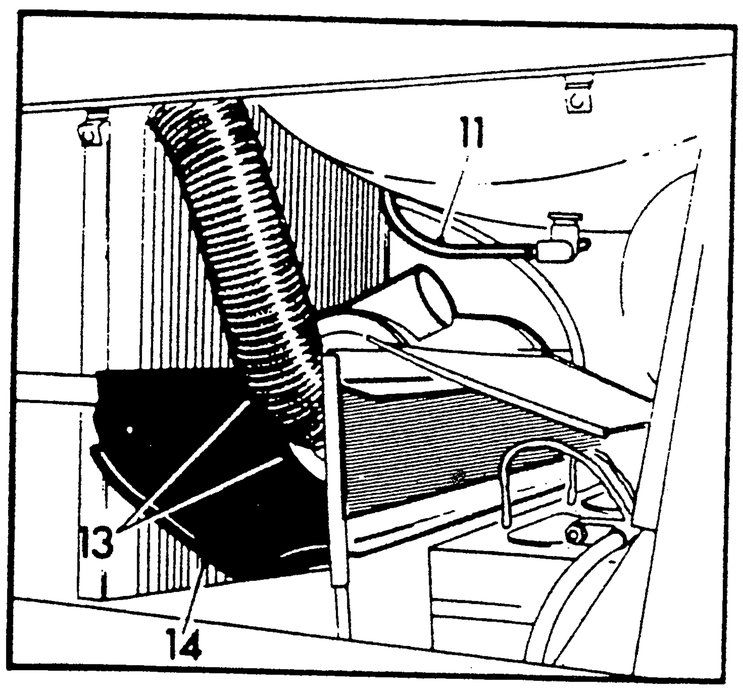

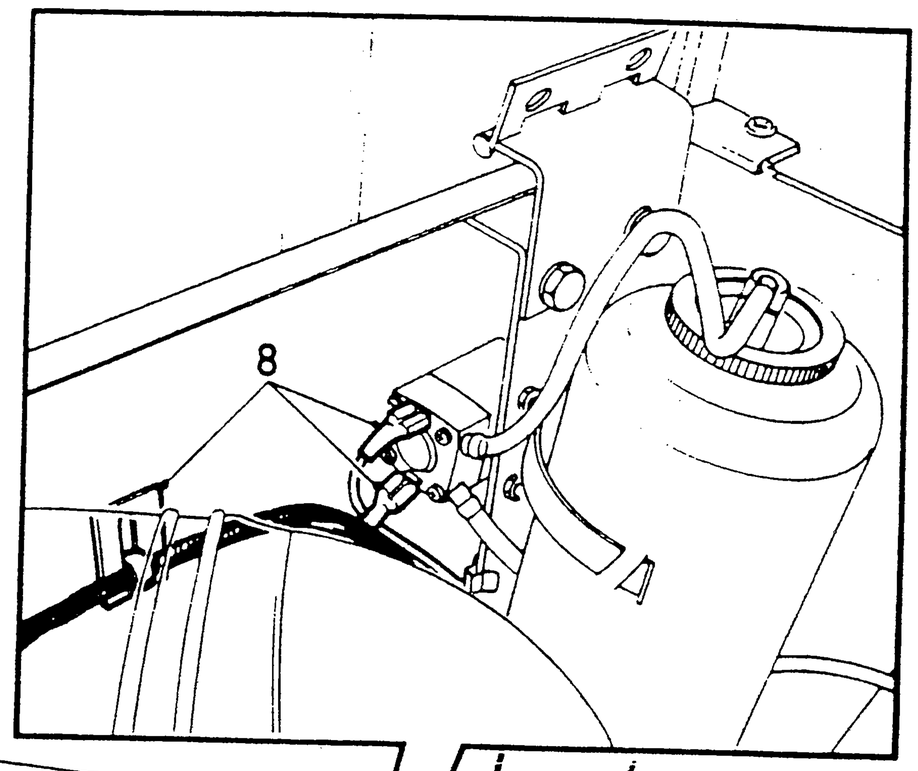

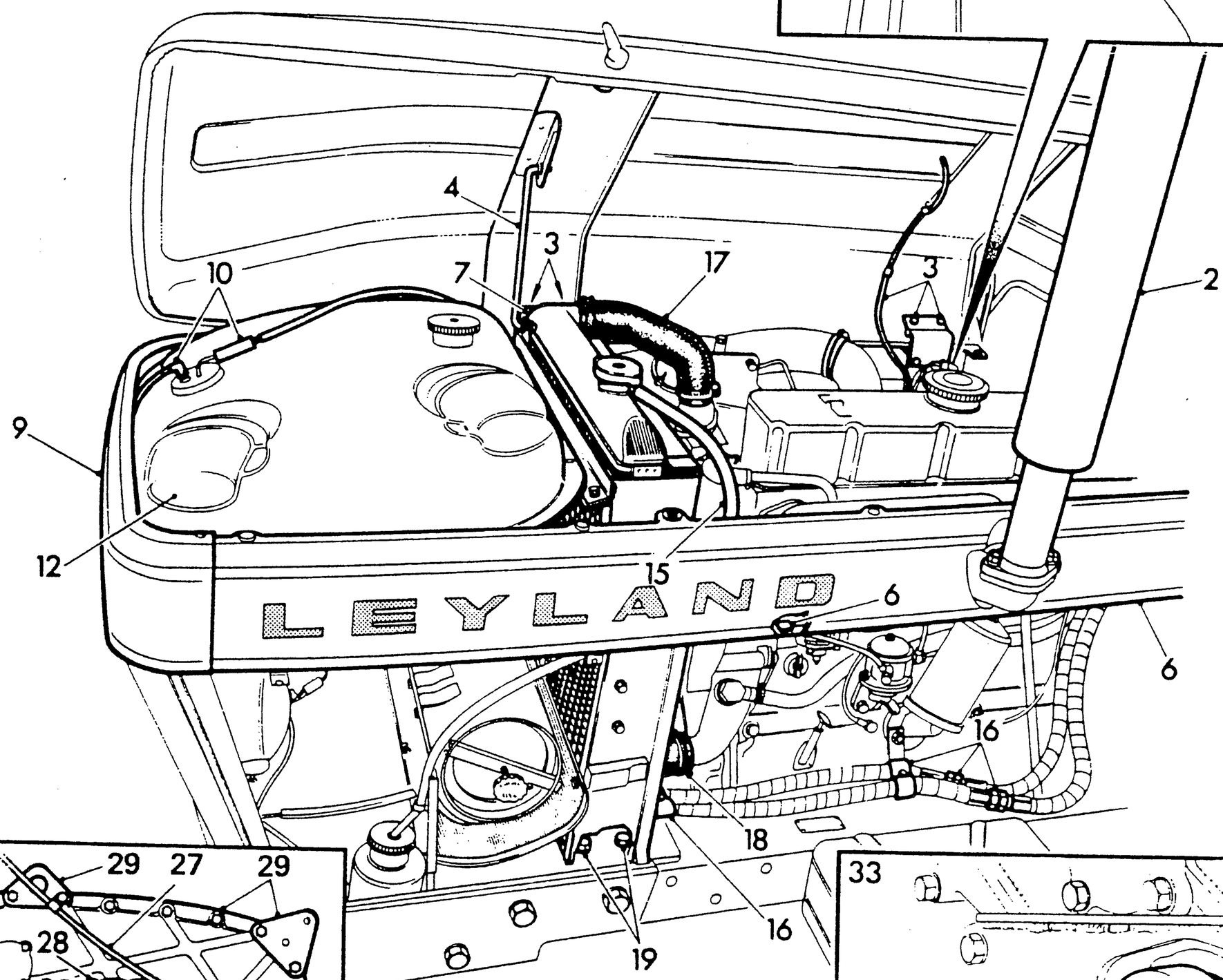

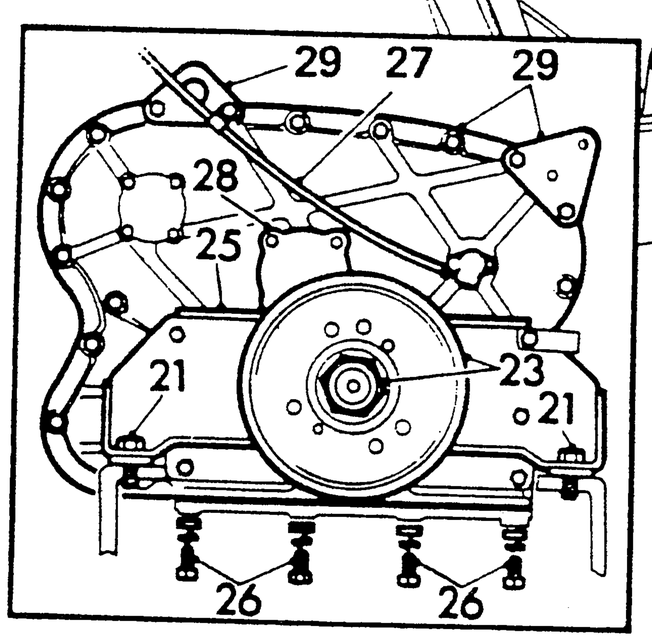

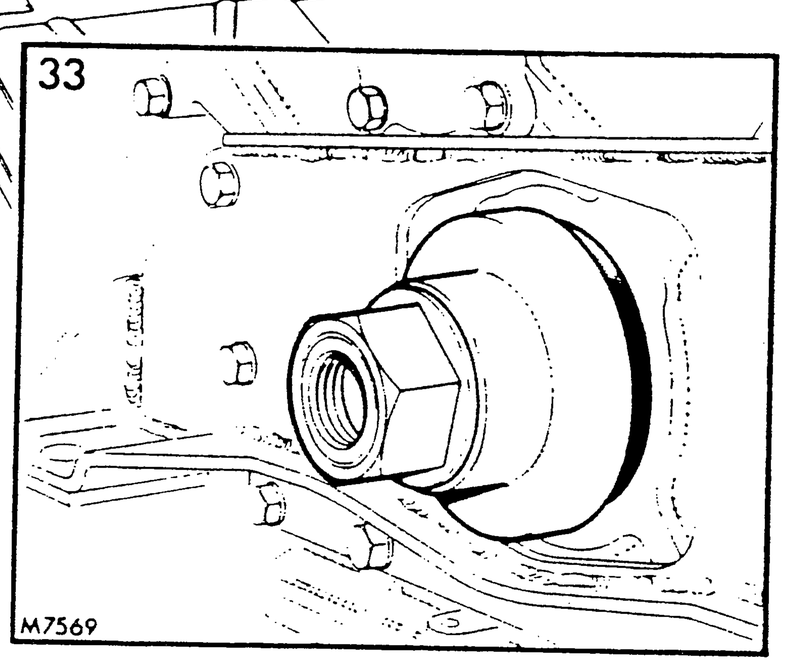

https://tractormanualz.com/

TIMING GEAR COVER

—Remove and refit TB12.65.01

Service tool: 18G 1111

Removing

1. Remove both side panels, release baffle and disconnect earth lead from battery negative (—) terminal.
2. Remove exhaust silencer.
3. Release and raise bonnet, disconnect windscreen washer pipe and slacken nuts on bonnet hinges to finger tight.
4. Release bonnet stay at fuel tank bracket, remove nuts and lift off bonnet.
5. Drain cooling system.
6. Disconnect fuel pipe clip and remove left-hand side surround.
7. Remove front bonnet hinge from radiator frame, noting spacers.
8. Release wiring harness clips, disconnect windscreen washer pump and remove right-hand side surround complete with pump and bottle.
9. Lift off front surround.
10. Disconnect leak-off pipe and wire from fuel tank.
11. Close fuel tap and disconnect fuel pipe.
12. Remove fuel tank.
13. Disconnect hose and remove air filter.
14. Remove chaff screen.
15. Disconnect overflow pipe from radiator.
16. Mark steering pipes for refitting, disconnect unions at left-hand side of engine, release clips and draw pipes forward through the radiator frame.
17. Disconnect top hose from radiator.
18. Disconnect bottom hose.
19. Remove bolts and lift out radiator and frame assembly.
20. Remove alternator. TB86.10.02.
21. Remove setscrews securing engine front mounting bracket to frame.
22. Remove fan and fan belt.
23. Remove nut and washer and draw off crankshaft pulley.
24. Support engine on jack and packing.
25. Remove engine front mounting bracket.
26. Remove four bolts securing sump to timing cover.
27. Disconnect tractometer drive cable from timing cover.
28. Remove idler gear shaft support from timing cover.
29. Remove timing cover, alternator bracket, lifting eye and accelerator return spring bracket, noting lengths and positions of bolts.

Refitting

30. Remove oil seal from timing cover, clean the joint faces and inspect sump gasket for damage.
31. Refit timing cover, using a new gasket. Ensure lifting eye, alternator bracket and accelerator return spring bracket are fitted in original positions.
32. Clean joint faces and fit the idler gear shaft support, using a new gasket.
33. Lubricate a new crankshaft front oil seal and fit it using tool 18G 1111.
34. Fit tachometer drive cable and clip.
35. Fit engine front mounting bracket and tighten bolts to torque in DATA.
36. Remove jack and packing and fit bolts securing mounting bracket to frame, tightening them to the torque in DATA.
37. If the sump gasket was damaged during removing and refitting the timing gear cover, remove sump and renew gasket. TB12.60.44.
38. Lubricate sealing surface of crankshaft pulley and fit pulley, lock washer and nut. Tighten nut to torque in DATA and lock in position.
39. Position drive belt and fit fan blades.
40. Refit alternator. TB86.10.02.
41. Position radiator assembly and top and bottom hoses.
42. Secure radiator to frame.
43. Tighten clips on top and bottom hoses.
44. Feed steering pipes into position, clip to left-hand side of engine and re-connect.
45. Fit chaff screen.
46. Fit air filter assembly and connect hose.
47. Fit fuel tank.
48. Connect radiator overflow pipe.
49. Connect fuel pipe to tap and turn on tap.
50. Connect leak-off pipe and wire to fuel tank.
51. Refit front, right-hand and left-hand surrounds.
52. Clip wiring harness to right-hand side surround and re-connect windscreen washer pump.
53. Clip fuel pipe to left-hand side surround.
54. Refill cooling system.
55. Fit front bonnet hinge to radiator frame, with spacers between hinge and frame.
56. Fit bonnet, adjust as necessary, and connect pipe to windscreen washer jet.
57. Clean joint faces and fit exhaust.
58. Remove filler/level plug from steering pump reservoir and top-up as necessary to bottom of filler/level plug hole.

NOTE: When replenishing the reservoir ensure that the front wheels are in the full right lock position and the engine is running. Operate steering from lock to lock to expel air from system, top-up and repeat procedure as necessary then refit the filler/level plug.

DATA

Torque tightening figures	**Nm**	**kgf m**	**lbf ft**
Crankshaft nut	340 to 370	35 to 38	250 to 275
Fan and water pump pulley bolts	27	2,8	20
Front mounting bracket bolts	40 to 46	4 to 4,6	30 to 35
Mounting plate to main frame bolts	130	13,3	96

https://tractormanualz.com/

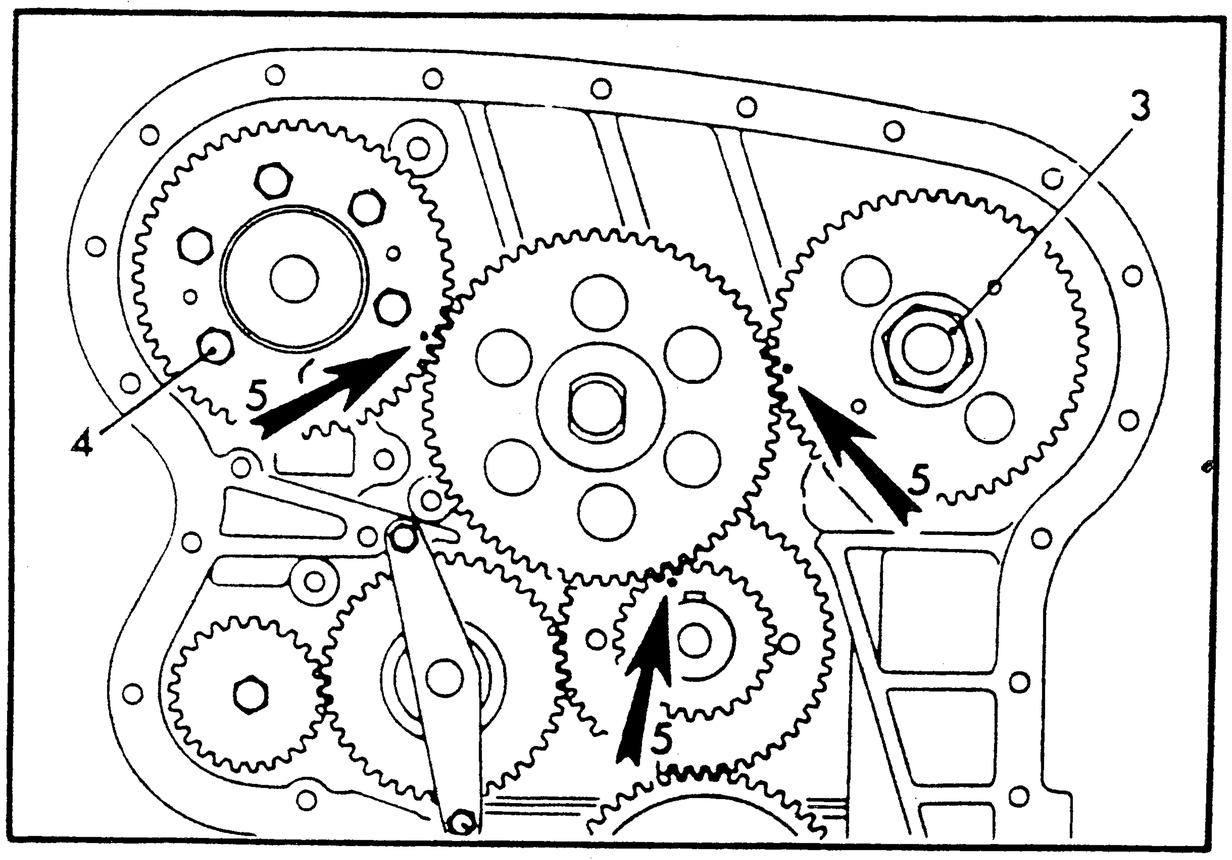

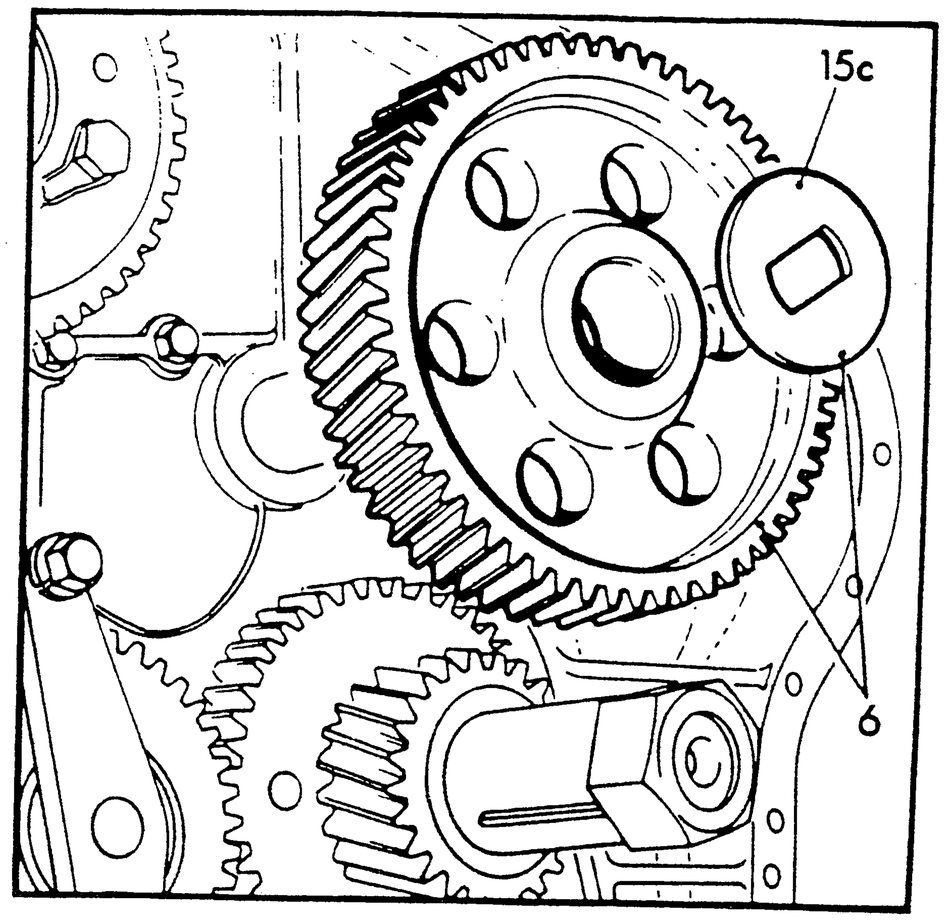

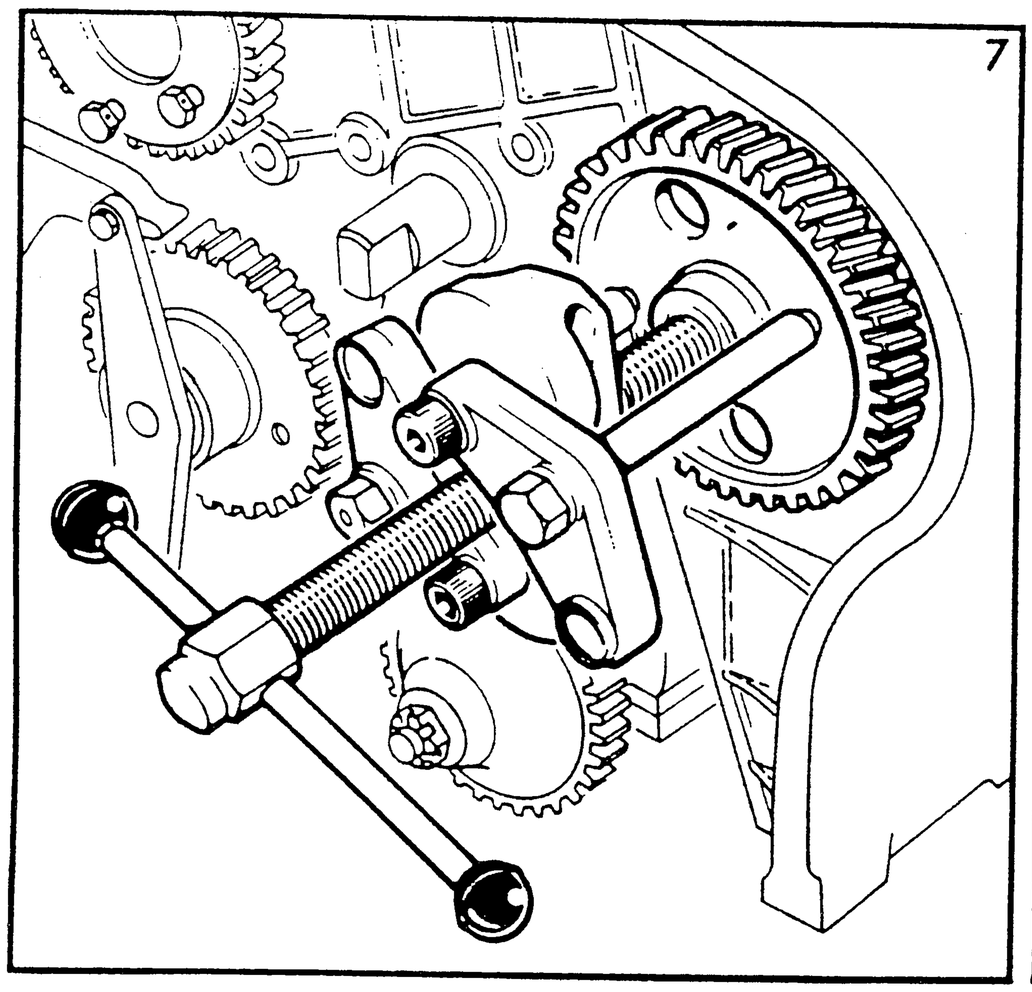

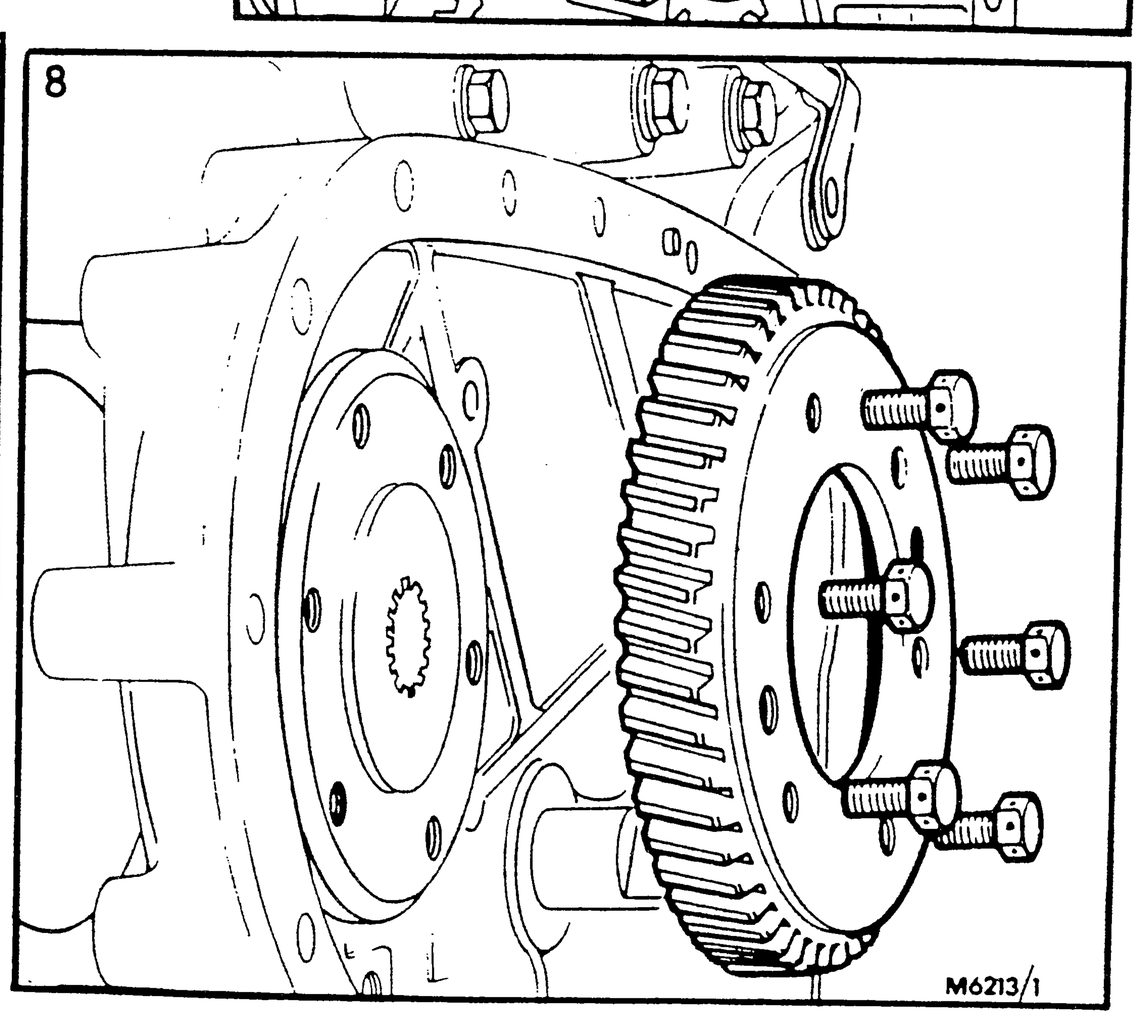

TIMING GEARS – SET

–Remove and refit **TB12.65.20**

Service tools: 18G 2, 18G 231, 18G 231 B, 18G 231 C

Removing

1. Remove timing cover. TB12.65.01.
2. Check backlash (see DATA) between each pair of timing gears, using feeler gauges.
3. Slacken camshaft drive gear nut, or bolt.
4. Remove locking wire and slacken the injection pump drive gear securing bolts.
5. Turn engine until timing marks on crankshaft, camshaft and injection pump gears are toward the idler gear.
   NOTE: The idler gear timing marks may be in any position.
6. Remove the main idler gear and thrust washer.
   NOTE: Do not turn the crankshaft or camshaft until the idler gear is refitted (unless the valve clearance adjusting screws are slackened off) or the valves will foul the pistons.
7. Remove nut (or bolt) and tab washer and draw gear from camshaft using tools 18G 231 and 18G 231 C.
8. Remove injection pump drive gear.

continued

https://tractormanualz.com/

9. Remove retaining plate and spacer from steering pump auxiliary idler gear.
10. Draw steering pump auxiliary idler gear from its spindle using tools 18G 231 and 18G 231 C; remove spacer.
11. Remove oil pump. TB12.60.26.
    NOTE: Ensure front of engine is supported before sump is removed.
12. Remove crankshaft pulley key and oil flinger.
13. Pull gears from crankshaft, using tools 18G 231 and 18G 231 B.
14. Ensure crankshaft gear and pulley keys are serviceable, and renew if required.
15. Inspect gears, and renew if required, noting:
    a. The oil pump drive gear may be removed using tool 18G 2. The early oil pump drive gear with a keyway may be replaced by the later type without a keyway and the key omitted. Tighten nut to torque in DATA.
    b. Check the main idler gear clearance (see DATA) and renew the bush or shaft as required, noting that the shaft has a left-hand thread and should be tightened to the torque in DATA.
    c. Check thickness of main idler gear thrust washer (see DATA), and renew if required.
    d. If the auxiliary idler gear requires replacement, use a new bearing.

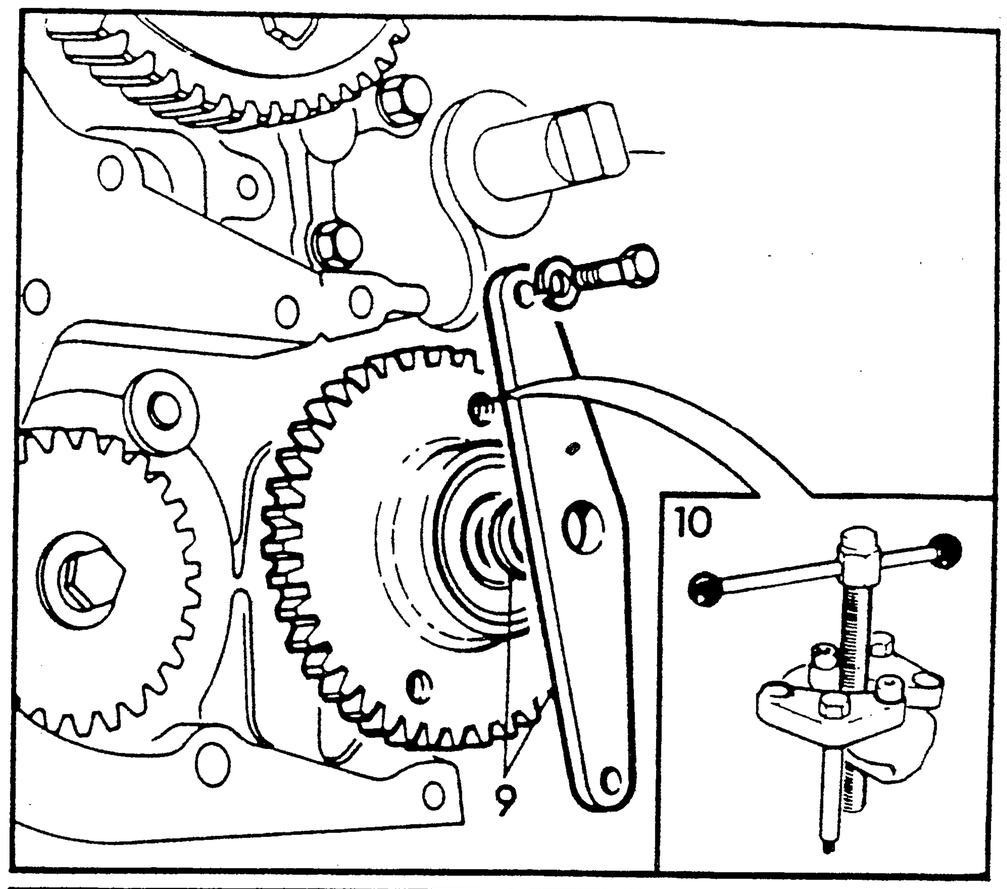

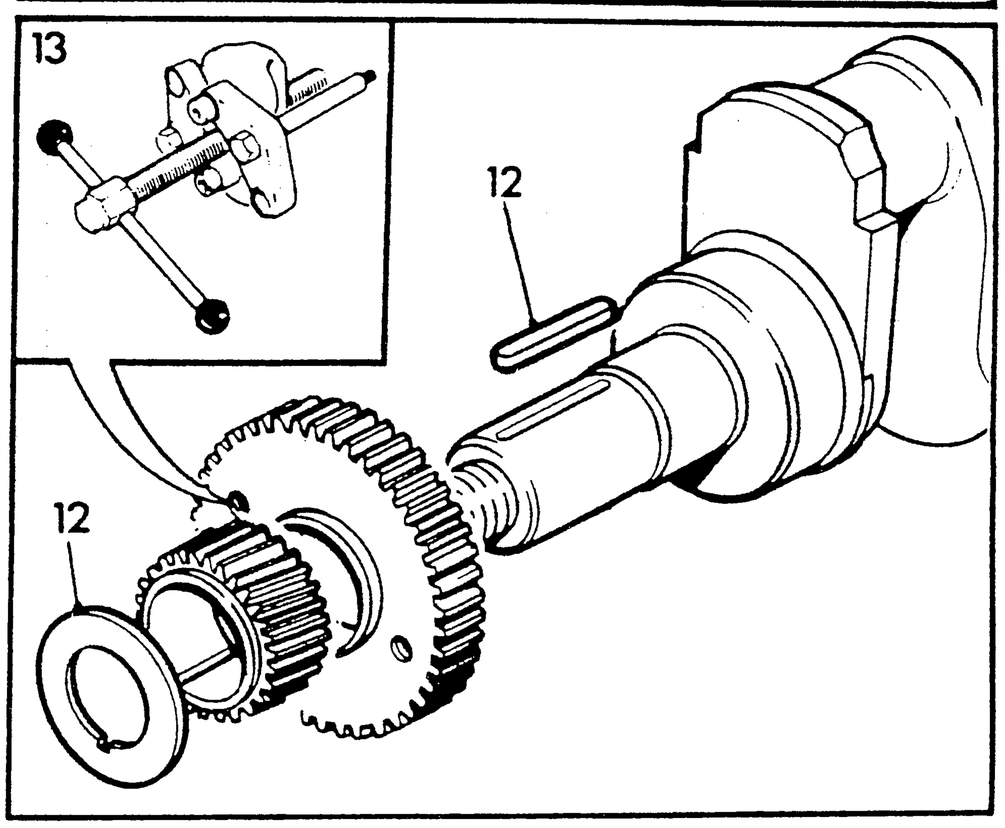

Refitting

16. Heat crankshaft gears in hot water, wipe dry and lubricate before fitting to shaft; ensure timing marks on gears face outward.
    NOTE: The inner gear must be fitted with the chamfered end of its bore innermost.
17. Fit oil flinger with its chamfered side toward the gear.
18. Fit crankshaft pulley key.
19. Refit oil pump. TB12.60.26.
20. Fit stepped spacer to auxiliary idler gear spindle with its recessed side over the circlip.
21. Fit auxiliary idler gear, spacer and retaining plate.

continued

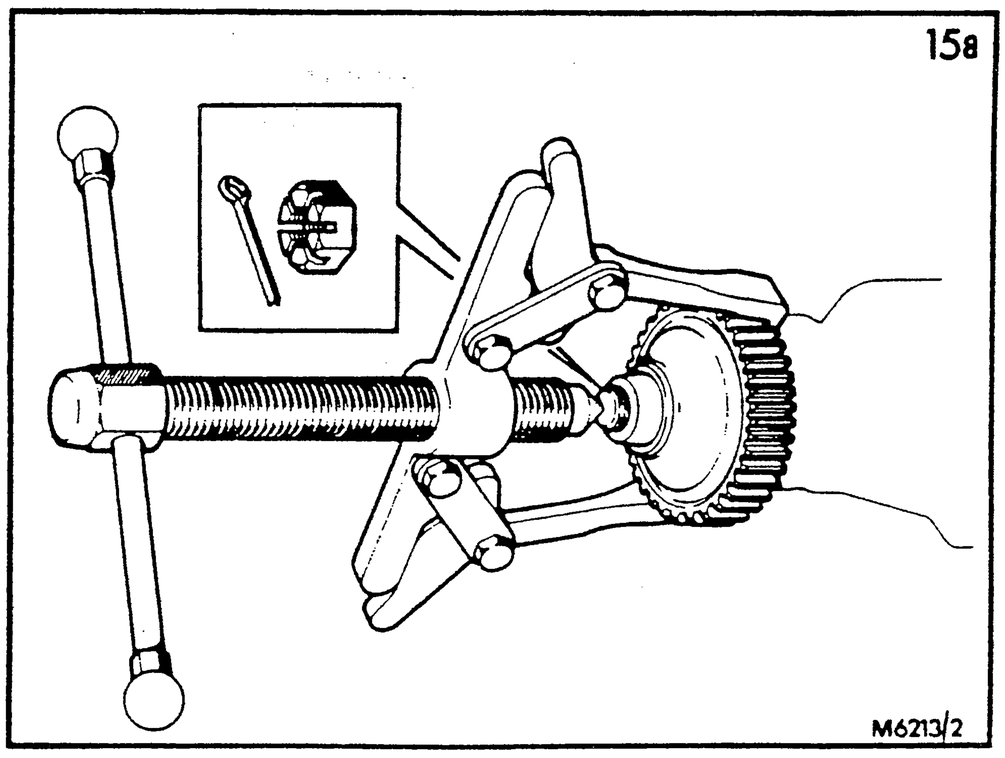

https://tractormanualz.com/

22. Fit injection pump drive gear to hub ensuring timing marks are aligned; fit screws and secure in pairs using wire.
23. Fit camshaft gear, tab washer, nut (or bolt) and leave slack.
24. Align timing marks of injection pump, camshaft and crankshaft gears and fit idler gear ensuring double timing mark on idler gear aligns with crankshaft timing mark. Check all timing marks align and fit thrust washer with its grooved face toward the gear.
25. Tighten camshaft nut; if bolt is fitted, tighten it to torque in DATA.
26. Refit timing cover, see TB12.65.01.

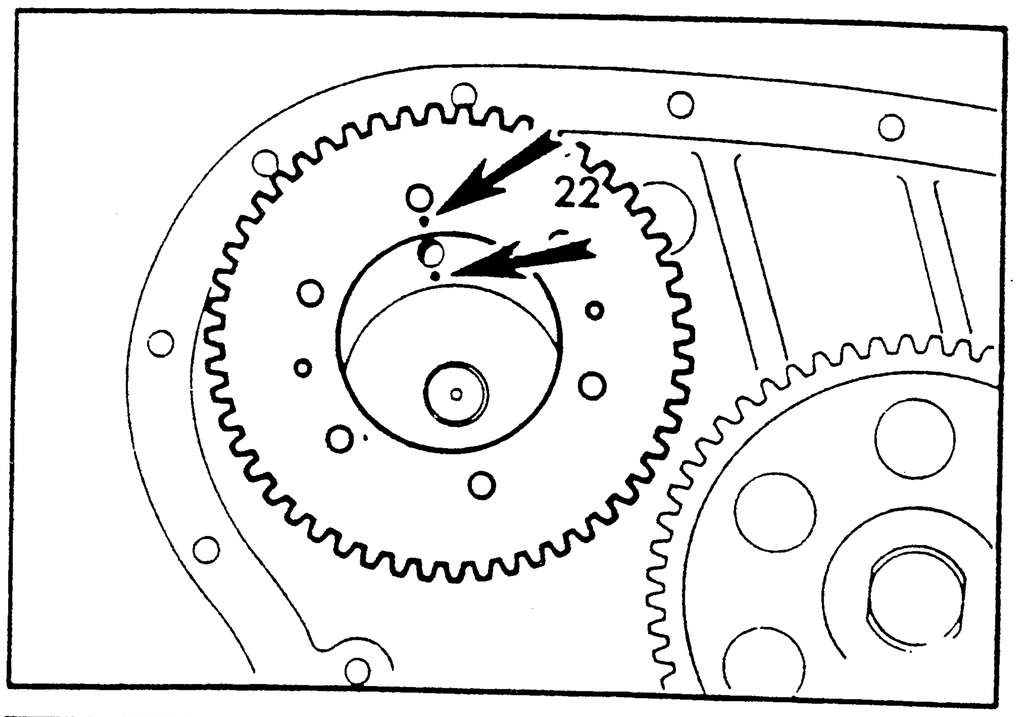

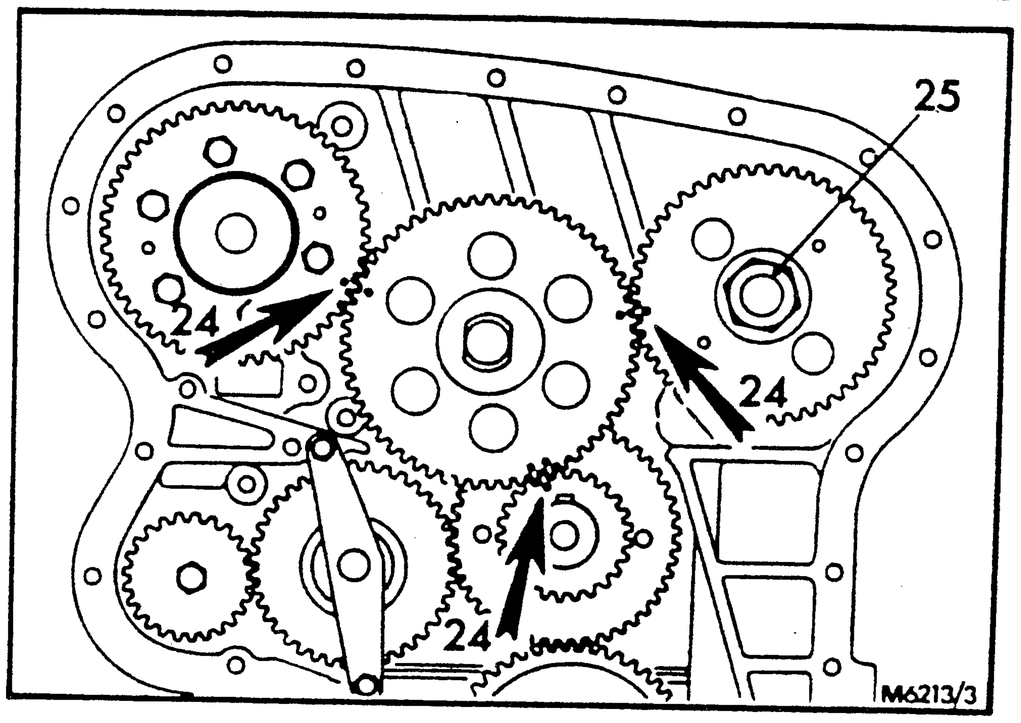

DATA

Timing gears

Backlash for timing gears	0,10 to 0,15 mm (0.004 to 0.006 in)
Idler gear shaft diameter	28,65 to 28,67 mm (1.1235 to 1.1240 in)
Idler gear bush to shaft clearance	0,025 to 0,050 mm (0.001 to 0.002 in)
** Idler gear thrust washer thickness	1,73 to 1,78 mm (0.068 to 0.070 in)**

Torque tightening figures

	Nm	kgf m	lbf ft
Oil pump drive gear nut	102	10,4	75
Camshaft gear retaining bolt (if fitted)	115	11,8	85
* Idler shaft (lubricated thread)	108	11	80**

https://tractormanualz.com/

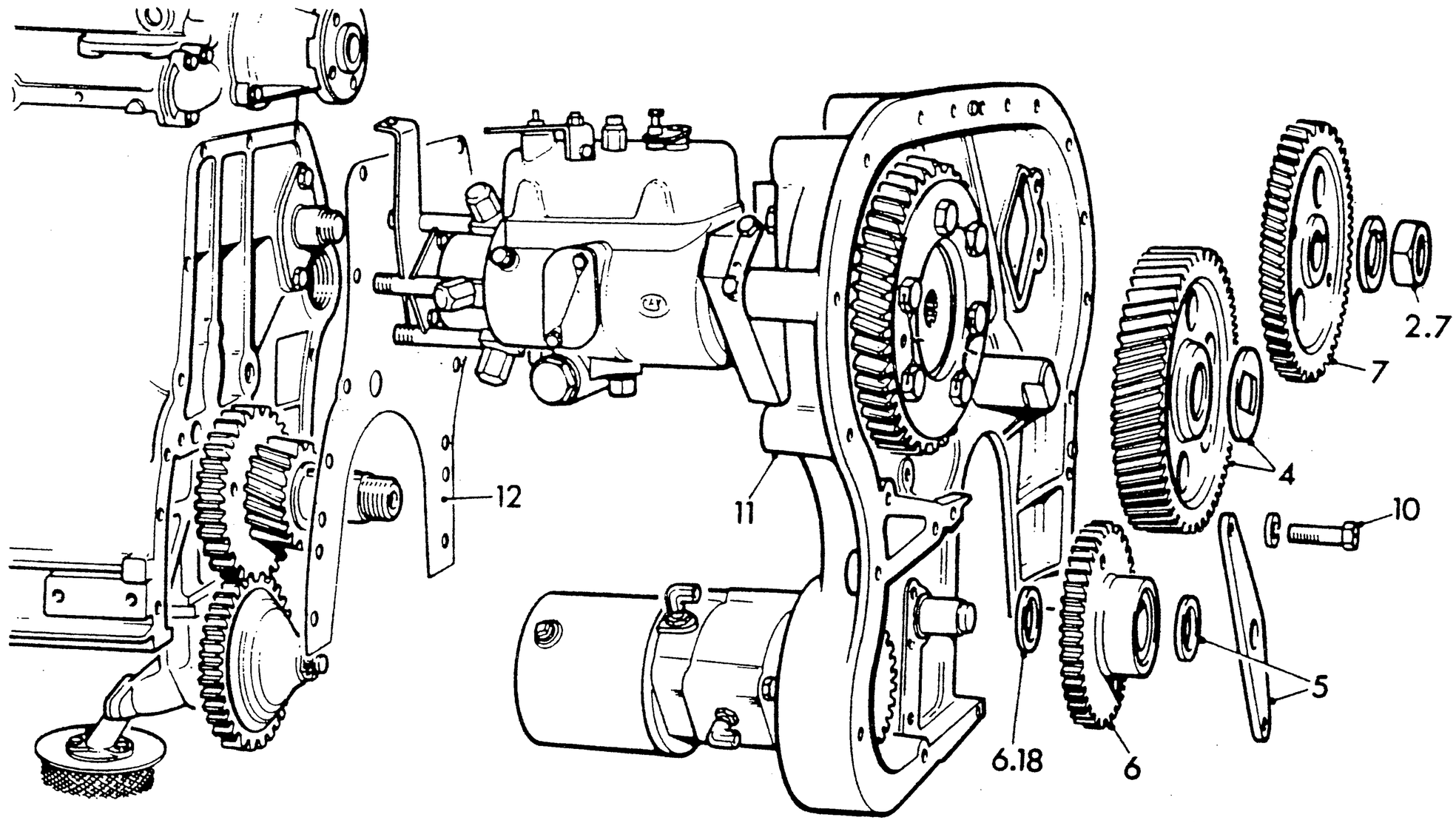

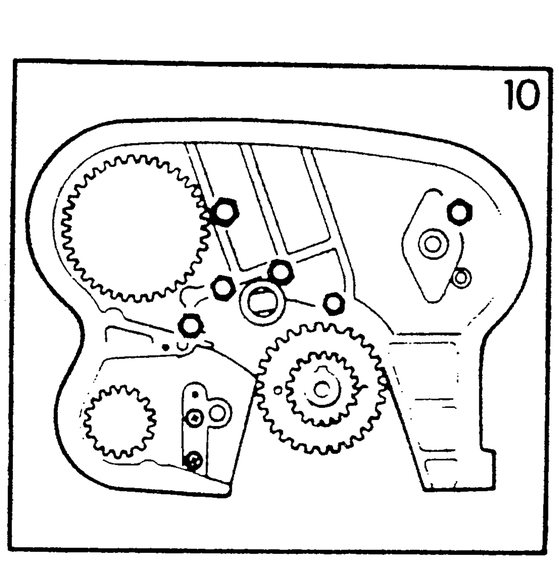

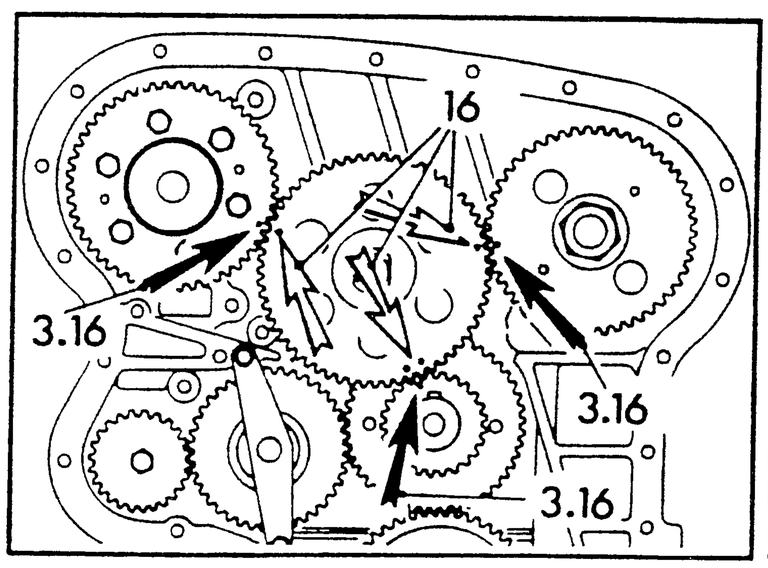

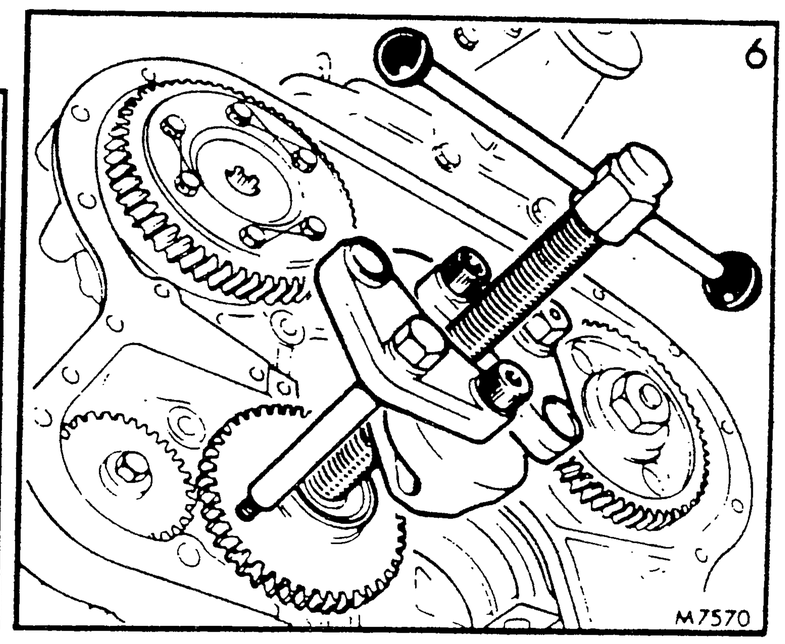

TIMING GEAR CASE GASKET

—Remove and refit TB12.65.25

Service tools: 18G 231, 18G 231 C

Removing

1. Remove timing gear cover. TB12.65.01.
2. Release tab washer and slacken camshaft nut (or bolt).
3. Turn engine until timing marks on crankshaft, camshaft and injection pump gears are toward the idler gear.
   NOTE: The idler gear timing marks may be in any position.
4. Remove idler gear and thrust washer.
   CAUTION: Do not turn the crankshaft or camshaft until the idler gear is refitted (unless the valve clearance adjusting screws are fully slackened off) or the valves will foul the pistons.
5. Remove retaining plate and spacer from steering pump auxiliary idler gear.
6. Draw steering pump auxiliary idler gear from its spindle, using tools 18G 231 and 18G 231 C; remove spacer.
7. Remove nut (or bolt) and tab washer and draw gear from camshaft using tools 18G 231 and 18G 231 C (see instruction 6).
8. Disconnect pipes and controls from injection pump, but do not remove injection pump from casing. TB19.30.07.
9. Disconnect pipes from steering pump.
10. Remove timing gear oil feed jet.
11. Remove bolts and screws securing timing case and tap case complete with injection pump and power steering pump from the three dowels locating it to the cylinder block.
    NOTE: The countersunk screws are staked in position.

continued

https://tractormanualz.com/

Refitting

12. Clean joint faces of cylinder block and timing case, apply sealing compound, see DATA, and fit a new gasket.
13. Position timing case on dowels and secure with bolts and screws; lock countersunk screws using a centre-punch.
14. Fit oil feed jet, ensuring its sealing washer is serviceable.
15. Fit camshaft gear, tab washer and nut (or bolt); do not tighten.
16. Align timing marks of injection pump, camshaft and crankshaft gears and fit idler gear ensuring double timing mark on idler gear aligns with crankshaft timing mark. Check all timing marks align and fit thrust washer with its grooved side toward gear.
17. Tighten camshaft nut (or bolt) and lock with tab; tighten the bolt, if fitted, to the torque in DATA.
18. Fit stepped spacer to auxiliary idler gear spindle with its recessed face over the circlip.
19. Fit auxiliary gear, spacer and retaining plate.
20. Refit timing cover. TB12.65.01.
21. Connect pipes to steering pump and fill reservoir, with wheels at 'full right lock'.
22. Connect fuel pipes and controls to injection pump and bleed fuel system. TB19.30.07.
23. Remove filler/level plug from steering pump reservoir and top-up as necessary to the bottom of the filler/level plug hole.
    NOTE: When replenishing the reservoir, ensure that the front wheels are in the 'full right lock' position and the engine is running. Operate the steering from lock to lock, top-up reservoir and repeat procedure as necessary until all air is bled from the system then refit the filler/level plug.

DATA

Torque tightening figures	**Nm**	**kgf m**	**lbf ft**
Camshaft drive gear securing bolt (when fitted)	115	11,8	85

Special lubricants and compounds	
Sealing compound for timing case	Hylomar or Welseal

https://tractormanualz.com/

ACCELERATOR CABLE – ALL MODELS

–Remove and refit TB19.20.06

Removing

1. Remove baffle board.
2. Remove return spring.
3. Remove split pin, washer and clevis pin from injection pump lever.

** 3. Remove split pin, washer and clevis pin (early models), disconnect accelerator cable (later models) from injection pump lever.**

4. Remove split pin and washer from accelerator cable anchor pivot and remove.
5. Disconnect cable at accelerator lever and withdraw.

Refitting

6. Reverse procedure 1 to 5.
7. Check and adjust full throttle and closed throttle positions.

COLD START CABLE — ALL MODELS EXCEPT 245

–Remove and refit TB19.20.26

Removing

1. Remove cold start cable from bulkhead.
2. Disconnect cable from injection pump and release clip from starter motor.

Refitting

3. Reverse procedure 1 and 2.

STOP CONTROL CABLE – ALL MODELS

–Remove and refit TB19.20.32

Removing

1. Remove baffle board.
2. Remove instrument housing right-hand side panel.
3. Disconnect cable from injection pump, release retaining screw and clip.
4. Unscrew nut and washer; withdraw cable from console.

Refitting

5. Reverse procedure 1 to 4.
6. Check and adjust operation of stop control cable.

https://tractormanualz.com/

FUEL MAIN FILTER ELEMENT – ALL MODELS

–Remove and refit TB19.25.07

Removing

** 1. All models except 245: Remove plug and drain fuel.**
WARNING: Do not crank the engine when filter is drained of fuel as damage to the injection pump will result.
2. Remove bolt and detach base.
3. Twist element to remove from filter head.
4. Remove sealing rings and O-rings from filter head and base.

Refitting

5. Reverse procedure 1 to 4, noting:
   a. Use new sealing washers and O-rings.
   b. Bleed filter of air, see TB19.50.07, operations 1 to 3.
   c. Check for leaks.
   d. Wipe spilled fuel from tractor.

245

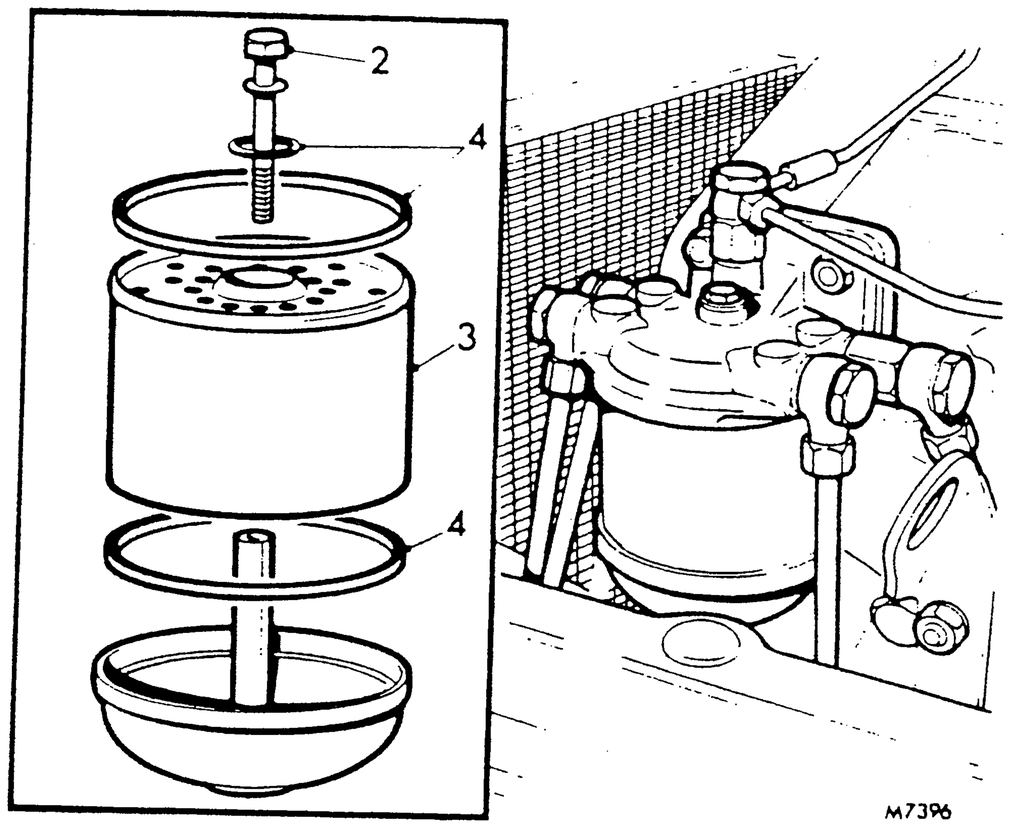

**All models except 245

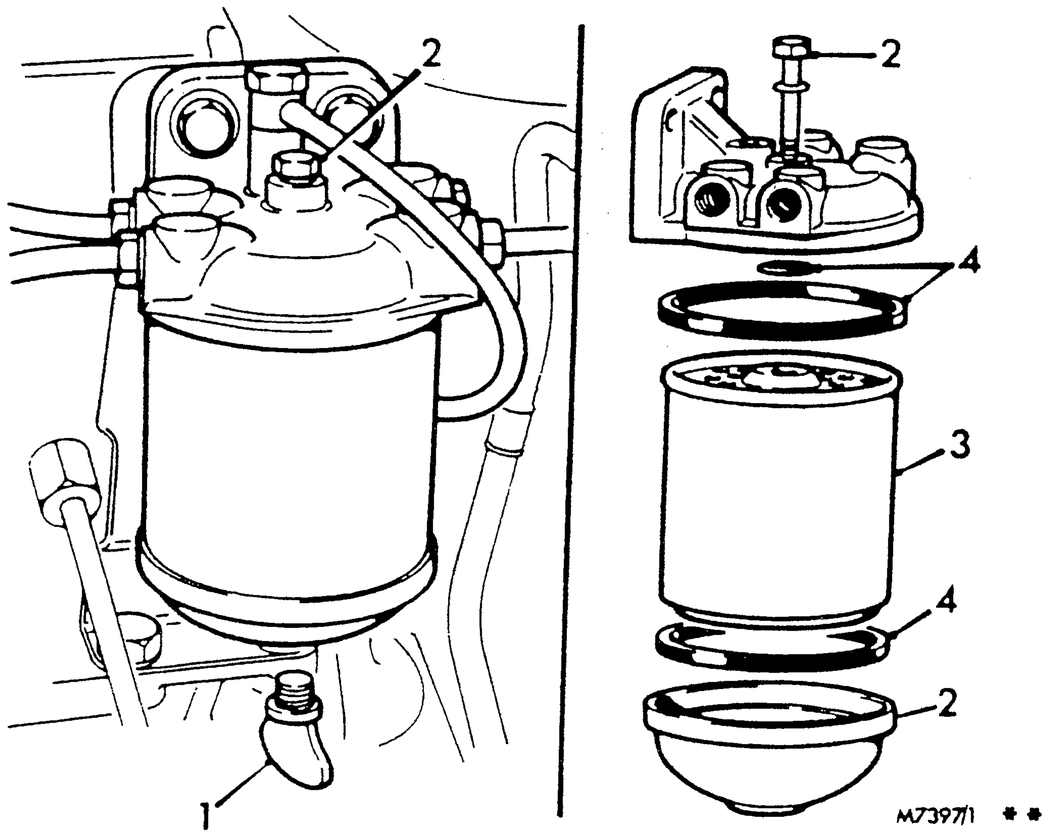

FILTER – FUEL TANK OUTLET – ALL MODELS

–Remove and refit TB19.25.10

Removing

1. Remove left-hand front side panel.
2. Close tap (clockwise) and disconnect the main fuel pipe.
3. Drain the fuel tank.
4. Remove the fuel tap assembly which will include the pencil filter from the tank.
5. Clean the filter.

Refitting

6. Refit the fuel tap assembly to the tank.
7. Connect the main fuel pipe to the tank, and top up with fuel.
8. Refit side panel.
9. Bleed fuel system. TB19.50.07.

TB19.25.07
TB19.25.10

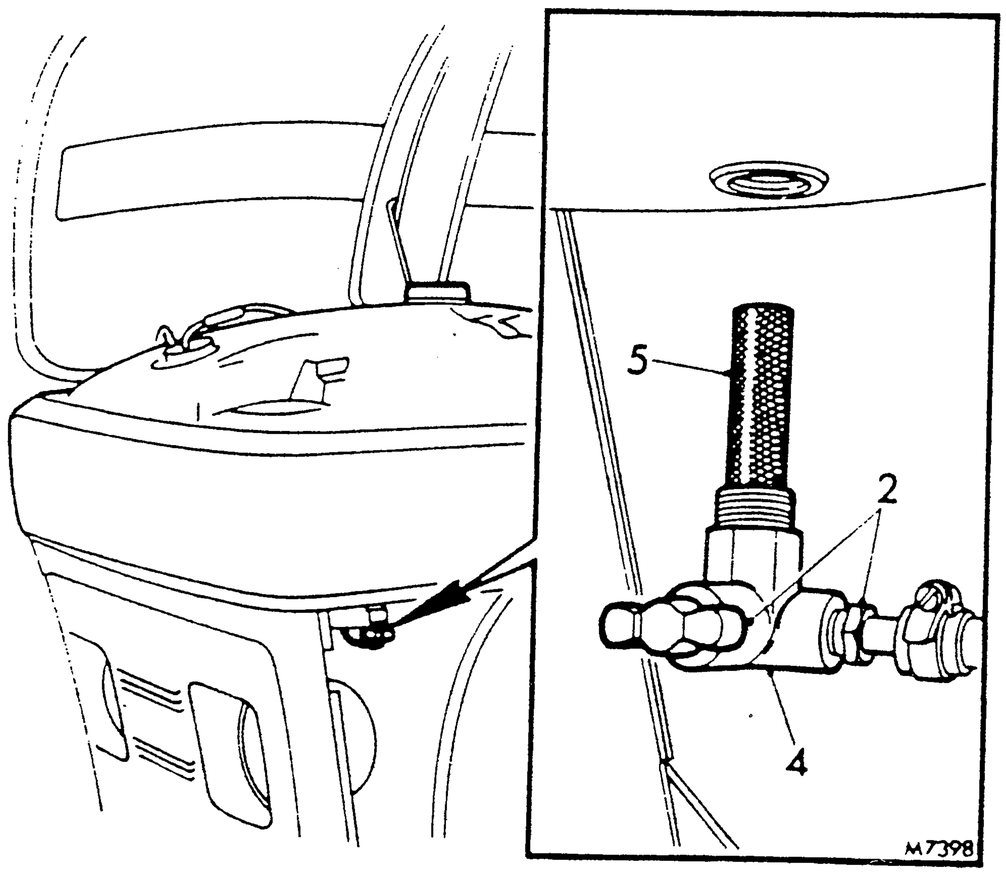

https://tractormanualz.com/

Refitting

23. Fit a new gasket.
24. Fit injection pump; ensure that timing marks on pump flange and timing case are in line and secure with nuts and washers.
25. Fit drive gear to pump hub and secure with setscrews and locking plate; remove wedge holding gear.
26. Refit inspection cover.
27. Refit access cover to timing case.
28. Connect stop control, throttle control and return spring to injection pump.
29. Refit guard plate to radiator frame.
30. Refit rubber plug in flywheel housing.
31. Refit rocker cover.
32. Refit injector fuel pipes.
33. Refit fuel feed and return pipes.
34. Connect battery and refit side panel.
35. Bleed fuel system. TB19.50.07.

** FUEL INJECTION PUMP — ALL MODELS EXCEPT 245**

—Remove and refit TB19.30.07

Service tools: AMK 9990 (if available) and alternative timing tools MS 67 B, MS 67 A or 18G 1206

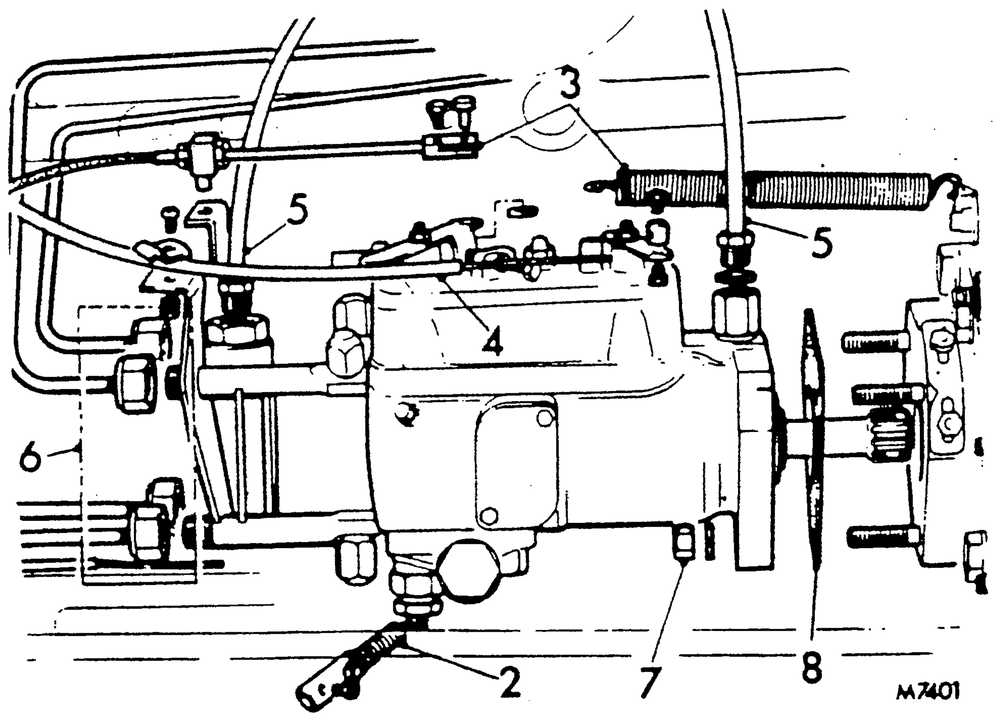

Removing

1. Remove side panel and disconnect earth lead from battery negative (—) terminal.
2. Disconnect cold start cable.
3. Disconnect accelerator cable and return spring.
4. Disconnect stop control cable.
5. Disconnect fuel pump feed and return pipes from pump.
6. Lift the bonnet, disconnect and remove all injector pipes.
7. Remove nuts and washers securing pump and withdraw pump.
8. Remove gasket and clean joint faces.

https://tractormanualz.com/

Checking timing

9. With No. 1 piston at the beginning of its compression stroke, insert timing pin AMK 9990 (if available), or a 6 mm (0.25 in) diameter rod, through the hole in the flywheel housing, above the starter motor, and into its hole in the flywheel. Rotate engine slightly if required, to align holes.

**NOTE: Three alternative gauges 18G 1206, MS 67 A or MS 67 B are available to check position of timing pointer. **

10. USING GAUGE 18G 1206: Insert gauge into injection pump drive hub, apply a clockwise force to handle to take up backlash and if necessary adjust position of timing pointer until it aligns with correct mark on gauge flange; remove gauge.
11. USING UNIVERSAL TIMING GAUGE MS 67 A:
    - **a. Fit short scribing arm with its bevelled edge in line with 255° timing angle mark and tighten screw to secure it in position.**
    - b. Slacken nylon screw to release splined shaft.
    - c. Insert shaft into drive hub and slide body forward until its spigot locates in housing then tighten the nylon locking screw.
    - d. Apply clockwise force to gauge to take up backlash and if necessary adjust position of timing pointer to align it with bevelled edge of scribing arm; remove gauge.

**12. USING UNIVERSAL TIMING TOOL MS 67 B:

- a. Assemble tool as shown with the small spline protruding from stepped boss end of tool.
- b. Align chamfered edge of movable clamp with 255° timing angle mark on disc and secure with knurled screw.
- c. Fit gauge to engine ensuring that the master spline is fully engaged and then slide the body along the spline until stepped boss is located in the counter bore. Lock tool on shaft by tightening the large knurled screw.
- d. Slide slotted pointer forward, until it locates against the engine timing pointer, then tighten clamp screw.
- e. Turn tool clockwise, to take up backlash, and check that the timing pointer aligns with the slot in the gauge pointer. Adjust position of engine timing pointer as required then remove gauge.

13. Remove timing pin from flywheel housing.

Refitting

14. Ensure master spline is aligned, fit pump using a new gasket and tighten nuts finger-tight.
15. Align pump timing mark to engine timing pointer and tighten nuts.
16. Fit injector pipes and secure.
17. Reconnect fuel feed and return pipes.
18. Connect stop control cable.
19. Connect accelerator cable.
20. Connect cold start cable.
21. Connect battery and fit side panels.
22. Bleed fuel system. TB19.50.07**

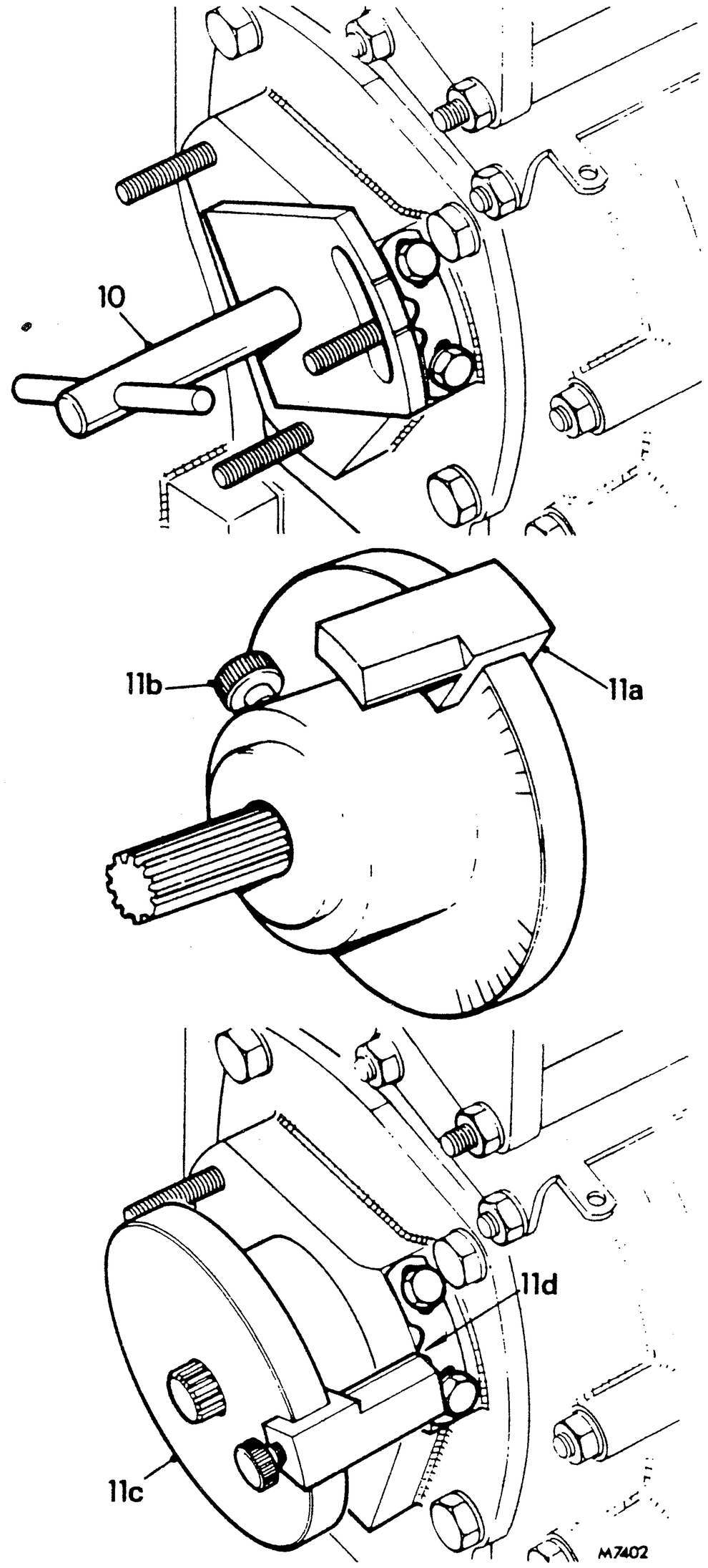

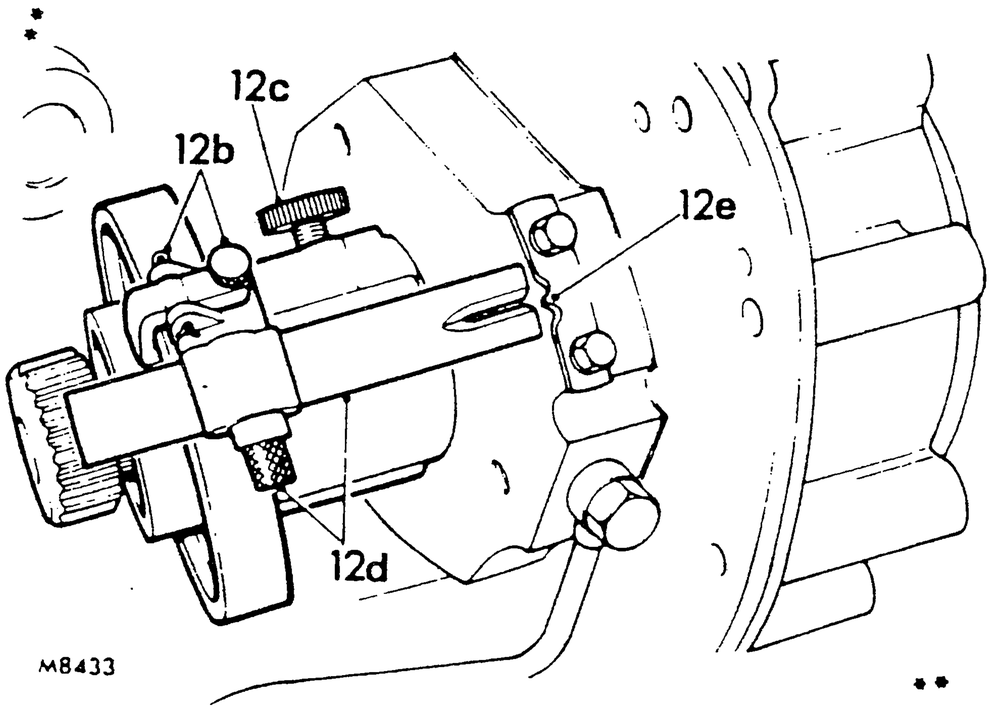

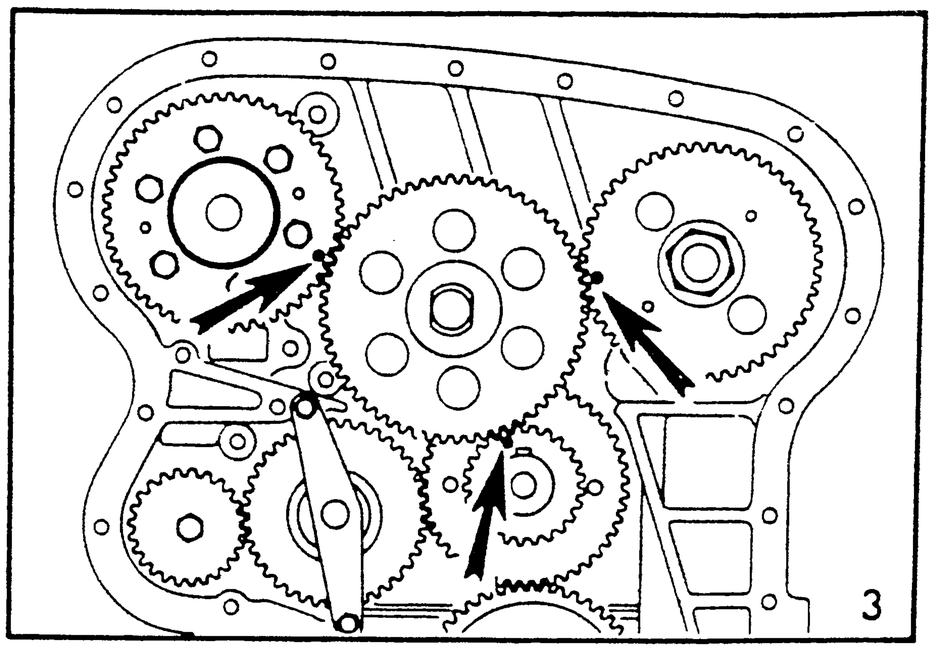

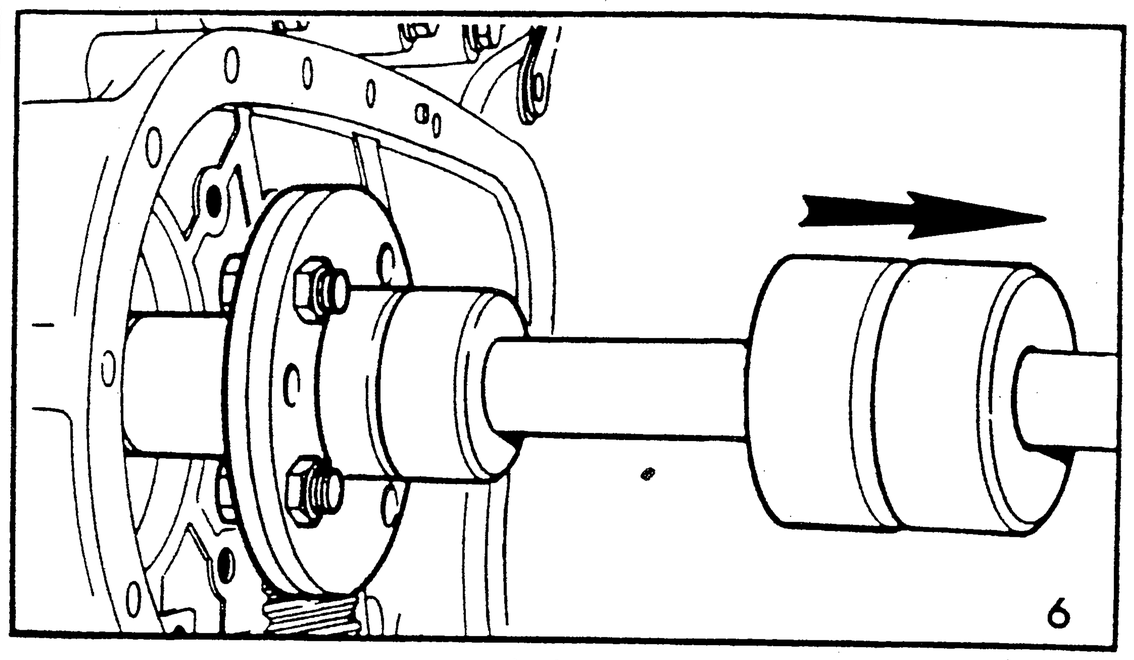

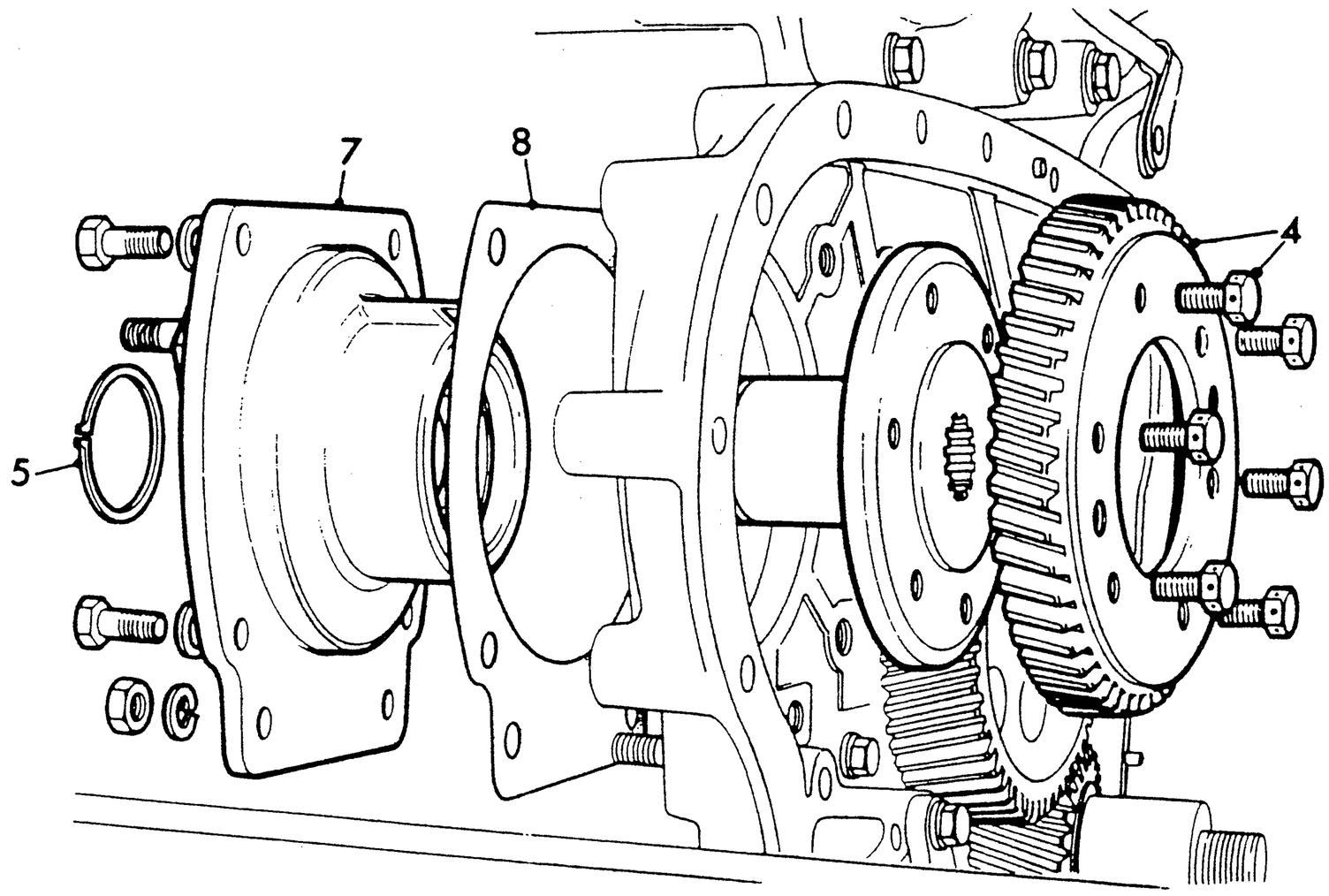

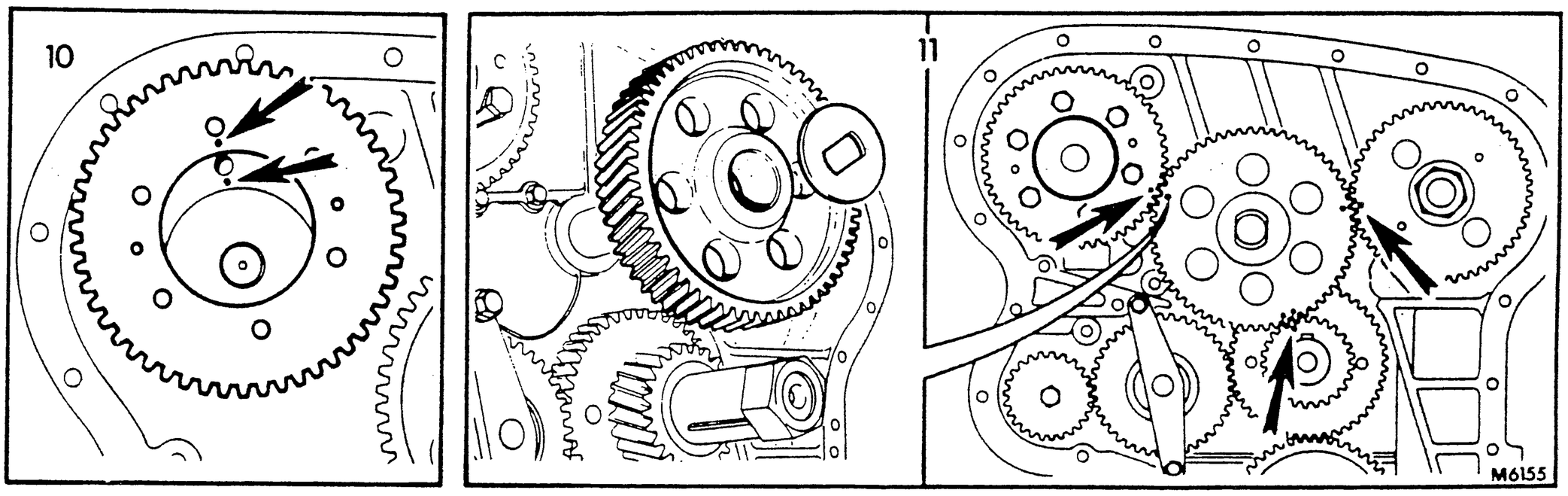

** INJECTION PUMP DRIVE — ALL MODELS EXCEPT 245**

—Remove and refit TB19.30.10

Service tools: 18G 284, 18G 284 AAB

Removing

1. Remove injection pump. TB19.30.07.
2. Remove timing gear cover. TB12.65.01.
3. Turn engine until timing marks on crankshaft, camshaft and injection pump drive gears are toward the idler gear.

   NOTE: The idler gear timing marks may be in any position.
4. Cut locking wire from fuel pump drive gear setscrews and remove setscrews and gear.
5. Remove circlip retaining injection pump drive hub in housing.

continued

https://tractormanualz.com/

6. Pull injection pump drive hub from its bearings using tools 18G 284 and 18G 284 AAB.
7. Remove injection pump drive housing from timing case.

Refitting

8. Clean joint faces and fit injection pump drive housing to timing case using a new gasket.
9. Tap drive hub into bearings and fit circlip.
10. Fit injection pump drive gear to hub, ensuring timing marks on hub and gear are aligned; fit setscrews and lock together in pairs using wire.
11. Remove thrust washer and idler gear, align timing marks of injection pump, camshaft and crankshaft gears and refit idler gear ensuring double timing mark on idler gear aligns with crankshaft gear timing mark. Ensure all timing marks align and fit thrust washer with its grooved side toward gear.
12. Refit timing gear cover. TB12.65.01.
13. Refit injection pump. TB19.30.07.

** INJECTION PUMP DRIVE — ALL MODELS EXCEPT 245**

—Overhaul TB19.30.11

M6160

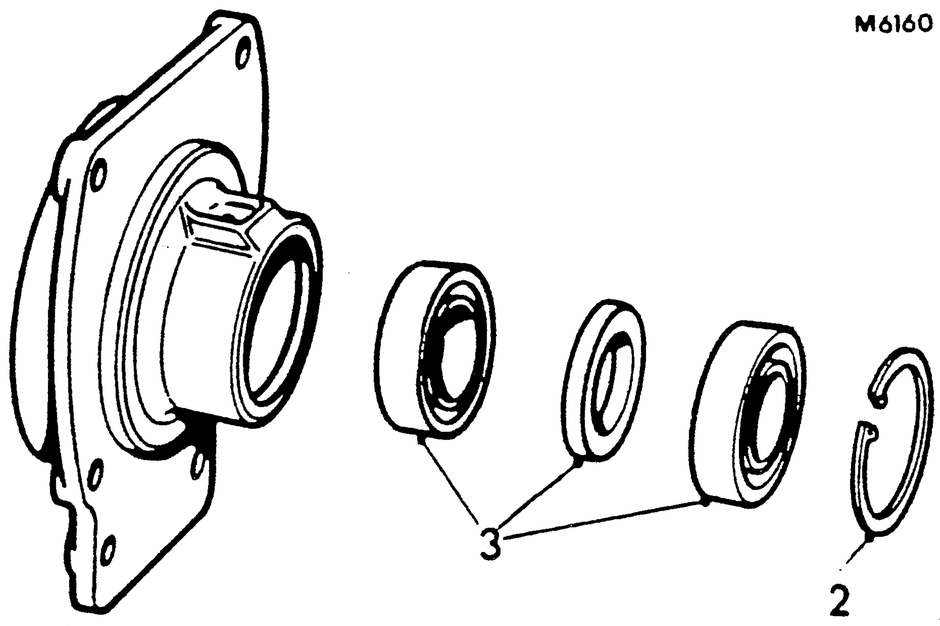

Dismantling

1. Remove injection pump drive. TB19.30.10.
2. Remove circlip from housing.
3. Drift bearings and spacer from housing.
4. Examine components for damage or wear and replace if required.

Reassembly

5. Fit bearings and spacer to housing.
6. Fit circlip.
7. Refit injection pump drive. TB19.30.10.

https://tractormanualz.com/

FUEL LIFT PUMP – ALL MODELS

–Remove, test and refit TB19.45.01

** **NOTE:** Lift pump illustrated is the 262/272/282/-462/472/482; follow same procedure in text for the 245 lift pump.**

Dry test a suspect pump before dismantling and after reassembly.

1. Remove pump. TB19.45.09.

Suction

2. Connect a vacuum gauge to pump inlet.
3. Operate priming lever 12 times; a steady vacuum of 25 to 38 cmHg (10 to 15 inHg) should be obtained and should hold for several minutes.

Delivery

4. Connect a pressure gauge to the pump outlet.
** 5. Operate priming lever 12 times; a steady pressure of 35 to 55 kN/m² (0,35 to 0,56 kgf/cm², 5 to 8 lbf/in²) for the 262/272/282/462/472/482. 41 to 69 kN/m² (0,42 to 0,70 kgf/cm², 6 to 10 lbf/in²) for the 245 should be obtained, and should hold for several minutes.**

Leaks

6. Block pump outlet with plug.
7. Connect an air supply not exceeding 35 kN/m² (0,35 kgf/cm², 5 lbf/in²) to the pump inlet.
8. Submerge pump in a container of fuel; air bubbles indicate leaks.
9. Refit pump. TB19.45.09.

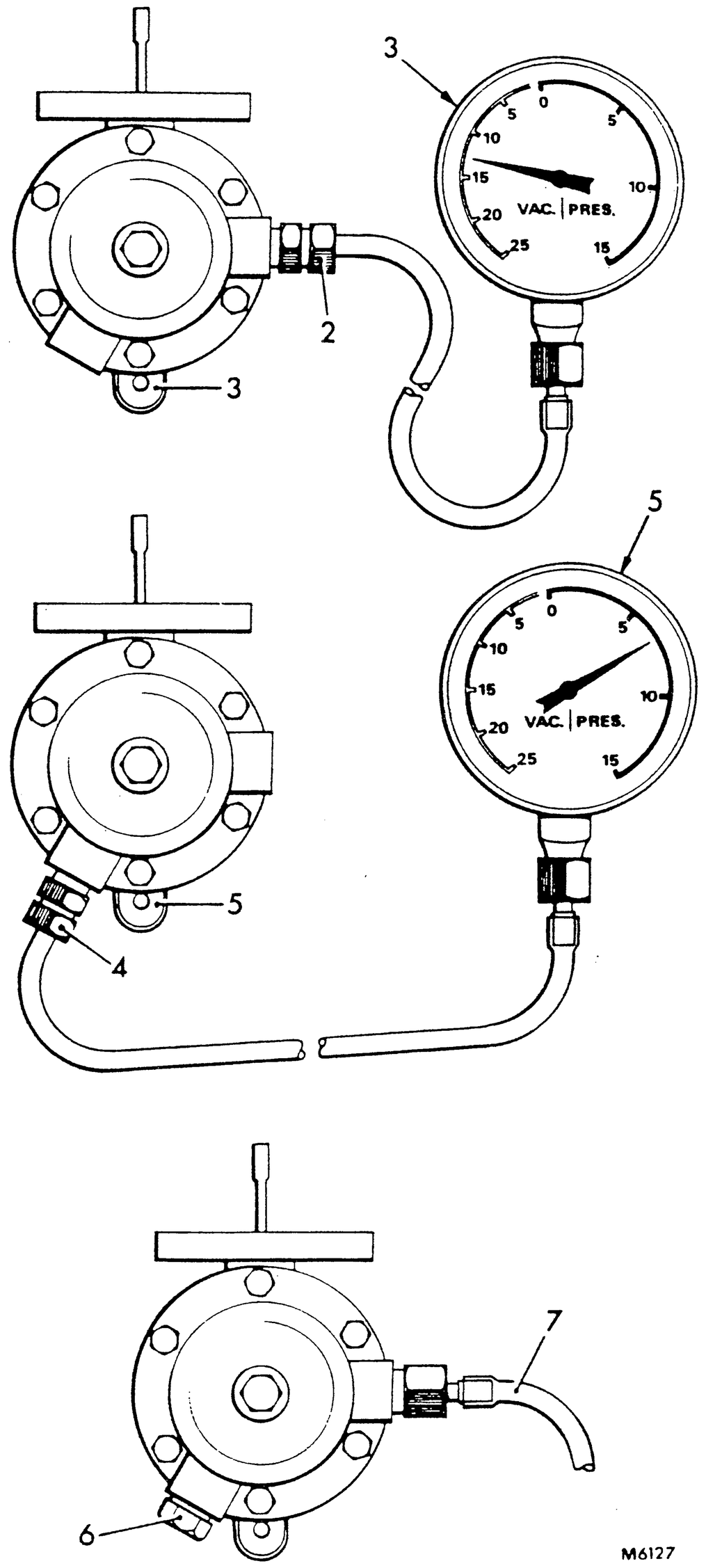

M6127

https://tractormanualz.com/

** LIFT PUMP FILTER — ALL MODELS EXCEPT 245**

—Remove, clean and refit TB19.45.05

Removing

1. Turn off fuel supply at tank.
2. Remove centre bolt and lift pump cover.
3. Remove sealing ring and filter gauze.

Cleaning

4. Wash filter in fuel or clean with compressed air.
5. Clean pump chamber.

Refitting

6. Reverse procedure 1 to 3, ensuring sealing ring is serviceable.
7. Bleed fuel filter. TB19.50.07.

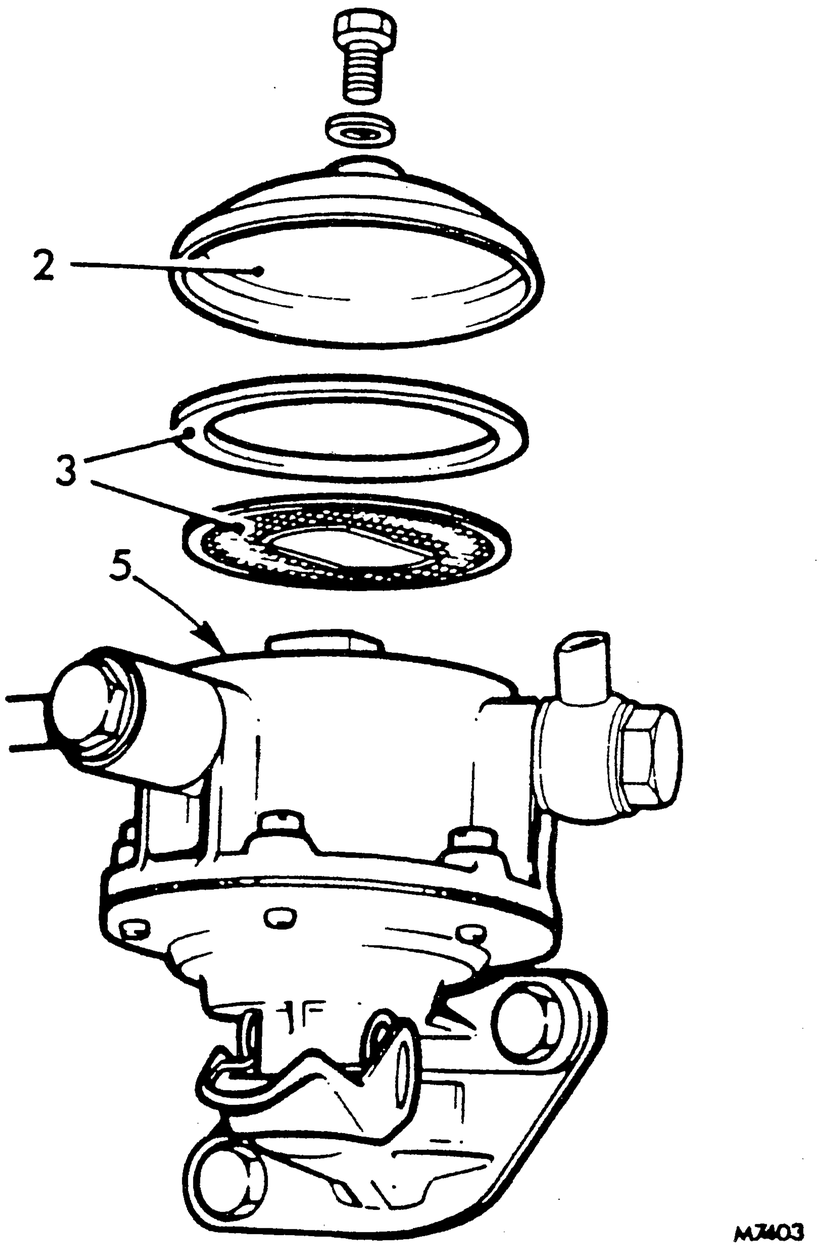

M7403

** FUEL LIFT PUMP — ALL MODELS EXCEPT 245**

—Remove and refit TB19.45.09

Removing

1. Turn off fuel at tap on tank.
2. Remove inlet pipe banjo from lift pump.
3. Remove fuel outlet pipe from lift pump.
4. Remove nuts, washers and withdraw pump.

Refitting

5. Clean joint faces.
6. Reverse procedure 1 to 4.
7. Check for leaks and bleed filter. TB19.50.07.

TB19.45.05
TB19.45.09

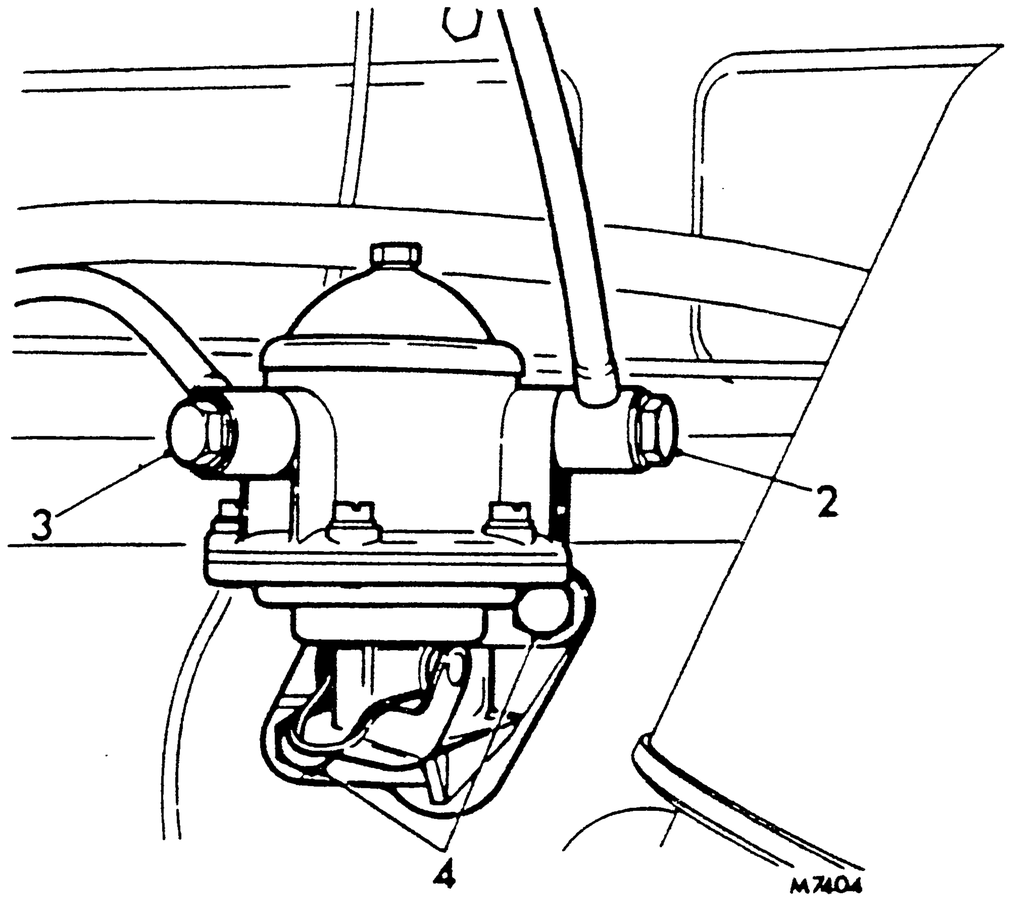

M7404

FUEL LIFT PUMP — ALL MODELS EXCEPT 245

—Overhaul TB19.45.16

Dismantling

1. Remove and test pump. TB19.45.01.
2. Clean pump exterior.
3. Scribe a line across body joint flanges for alignment on assembly.
4. Remove cover, sealing ring and filter gauze.
5. Remove securing screws and separate two halves of body.
6. Remove diaphragm by pressing down lightly and turning 90°.
7. Remove spring.
8. Secure rocker arm in a vice and pull or tap body to dislodge rocker arm pin and its components.

Inspecting

9. Thoroughly wash all parts in clean paraffin.
10. Inspect valves; if damaged, lever out carefully.
11. Test priming lever mechanism for wear and efficient spring return; if necessary, prise lever from ends of pin, remove pin and spring and replace parts as necessary.
12. Inspect diaphragm for hardening or cracking, and pull-rod end for wear; replace if necessary.
13. Inspect diaphragm spring; if corroded or distorted replace with a spring of same identification colour.
14. Replace any other worn or damaged parts.

Reassembling

15. If valves have been removed fit new gaskets, press in new valves using a suitable piece of steel tubing and stake in position.
    NOTE: The inlet valve spring must be toward the diaphragm and the outer valve spring away from the diaphragm.
16. Assemble components onto rocker arm pin, insert into body ensuring rocker arm spring is correctly located and tap pin retainers into their grooves.
17. Reverse procedure in 3 to 7, noting:
    a. Ensure diaphragm pull-rod is located correctly by operating rocker arm.
    b. Align two halves of body to scribed mark.
18. Test pump and refit to engine. TB19.45.01.

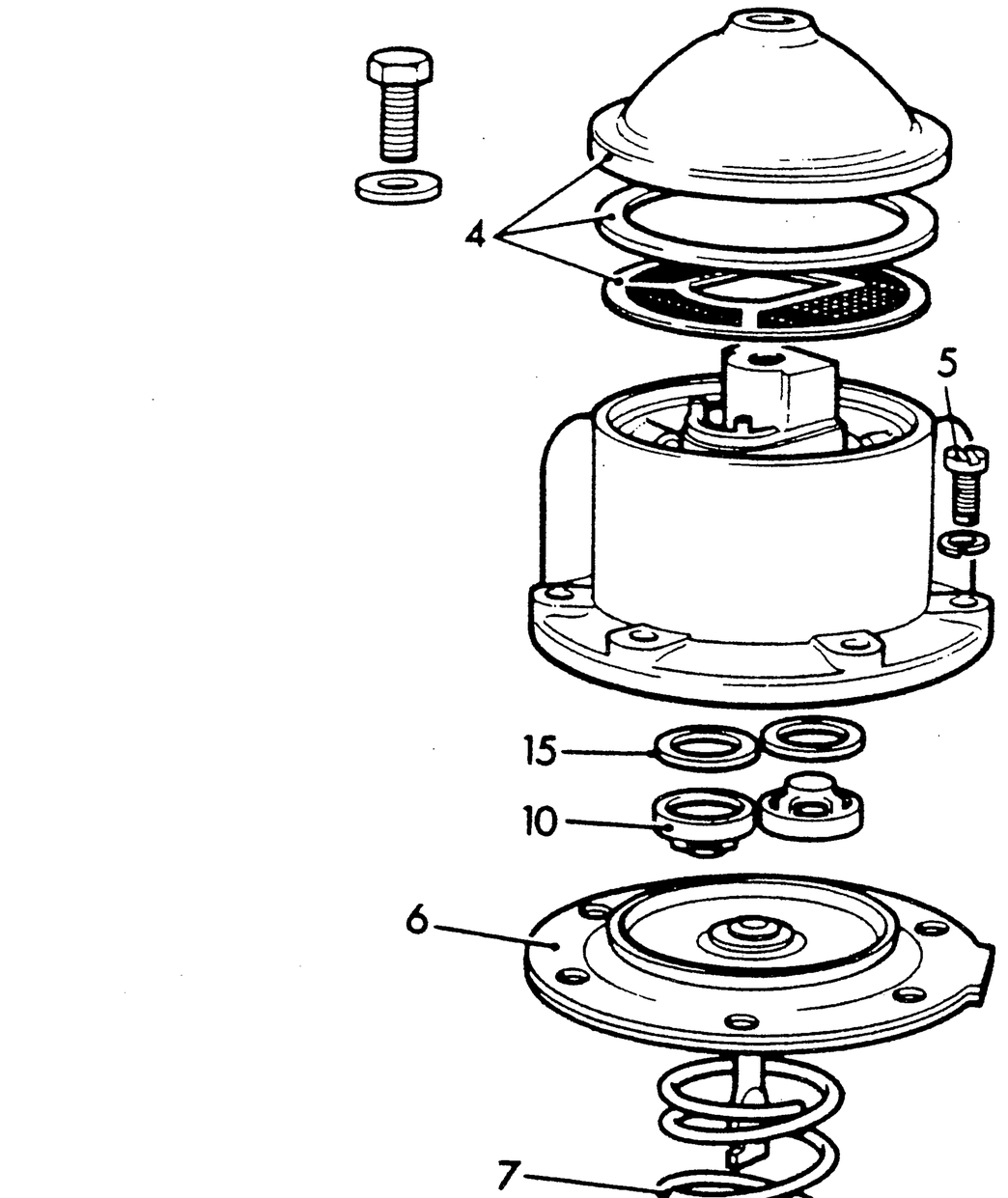

M6128

https://tractormanualz.com/

FUEL SYSTEM – ALL MODELS

245

–Bleed TB19.50.07

Air can enter the fuel system if any part is dismantled, if the fuel tank is allowed to become empty or through a leak in the system. This may result in failure to start or erratic running of the engine.

NOTE: After renewing fuel filter elements or draining water from filters it will be necessary to bleed only the filters as in 1 to 3 below. If only the injectors have been removed carry out operation 8.

WARNING: Do not attempt to bleed the fuel system by towing the tractor in gear or damage to the injection pump will result.

1. Ensure there is adequate fuel in the tank.
2. Slacken leak-off pipe banjo on top of filter.
3. Operate lift pump priming lever until air free fuel flows from the banjo union then tighten.

** **NOTE:** Turn the engine if required, to allow maximum travel of the priming lever.**

4. Slacken vent screw on injection pump hydraulic head.
5. Slacken vent screw on injection pump governor.
6. Operate lift pump priming lever until air free fuel flows from both vents then tighten the hydraulic head screw followed by the governor screw.
7. **245 model only.** Slacken the fuel pipe union at the thermostat unit in the inlet manifold, and operate the fuel lift pump priming lever until fuel free from air bubbles issues around the union threads. Tighten the union.
8. Turn engine using starter motor ensuring stop control is fully in and throttle is fully open. When the engine starts allow it to run until it is firing on all cylinders.

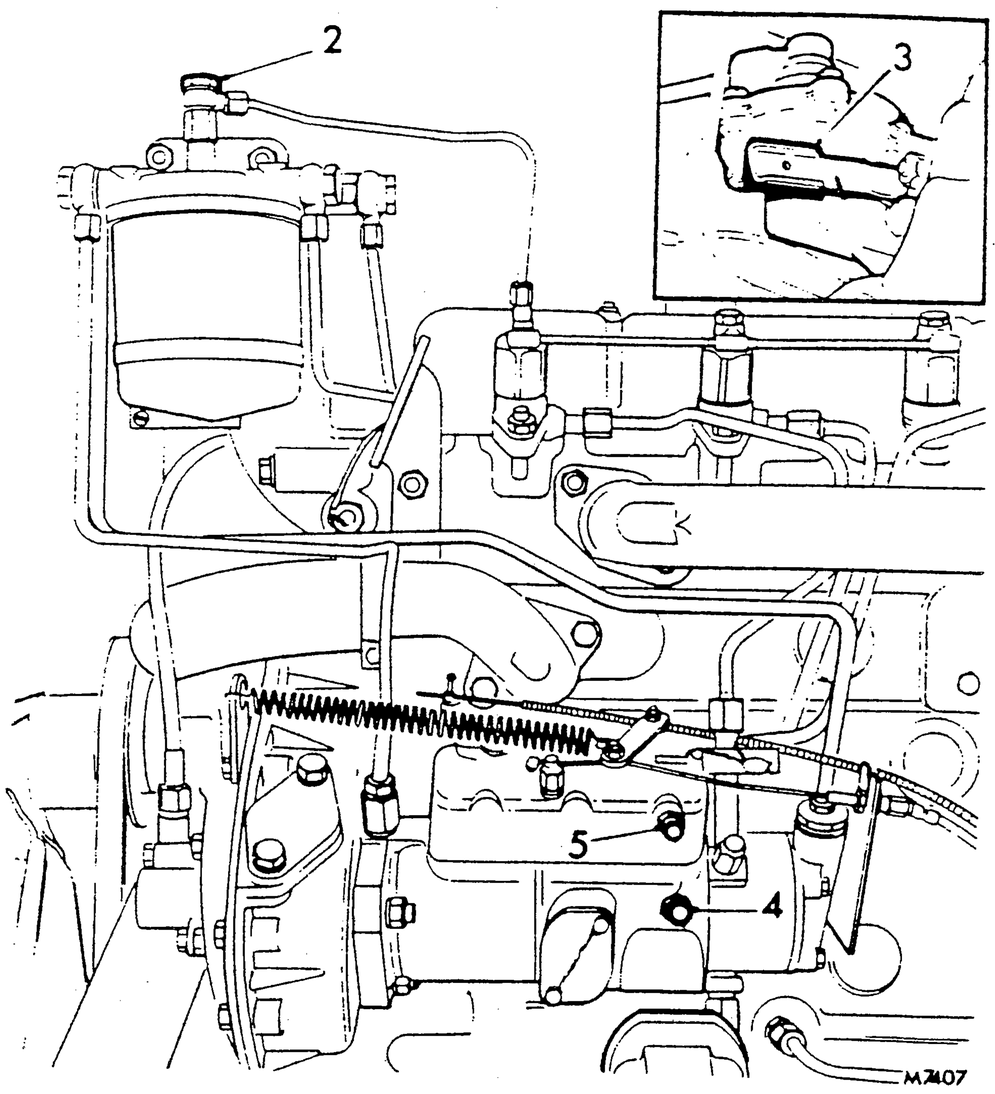

All models except 245

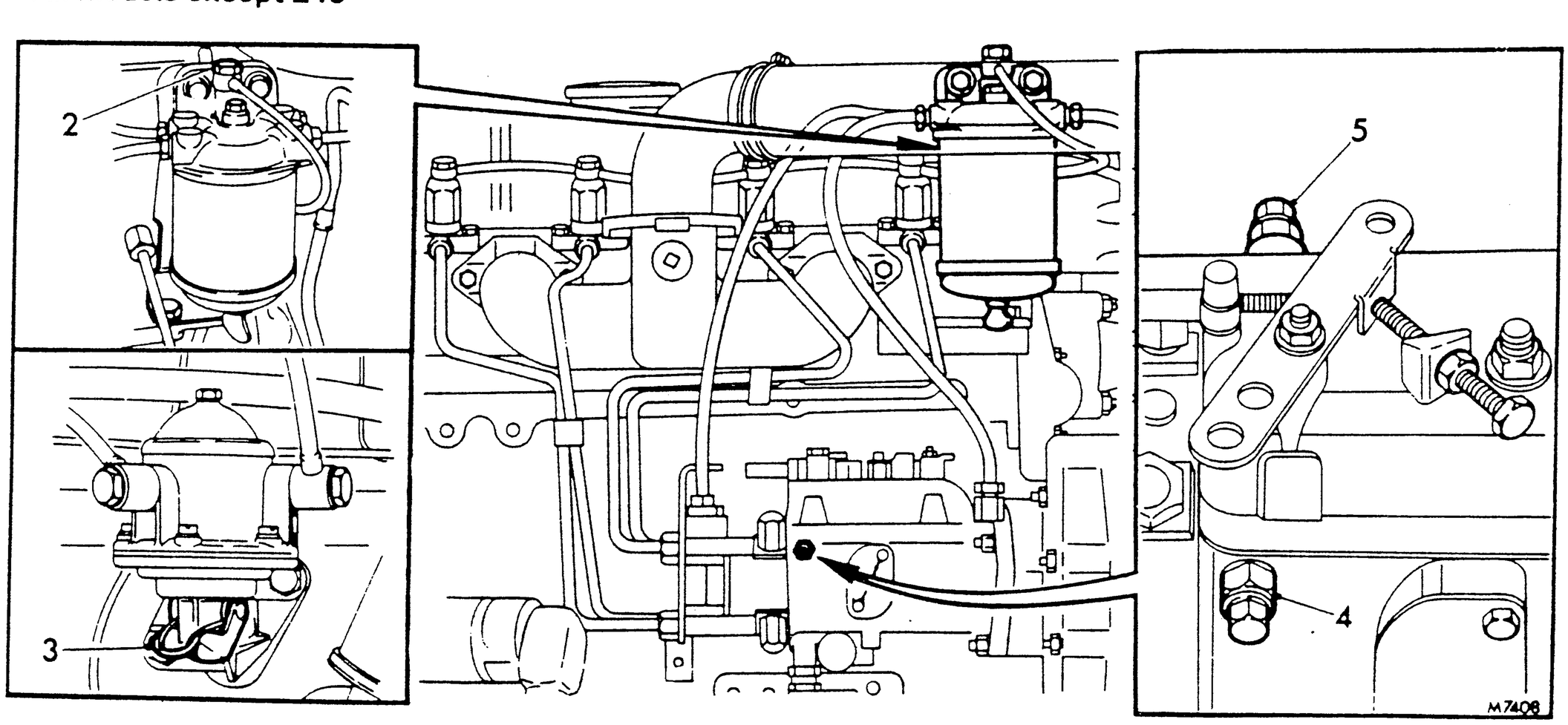

https://tractormanualz.com/

FUEL TANK UNIT – ALL MODELS

–Remove and refit **TB19.55.16**

Removing

1. Disconnect battery and lift bonnet.
2. Disconnect wire and leak-off pipe at tank unit.
3. Remove tank unit.

Refitting

4. Reverse procedure 1 to 3, ensuring unit is sealed correctly.

INJECTORS–245

–Remove and refit **TB19.60.01**

Removing

1. Disconnect the injector pipes and protect against ingress of dirt.
2. Remove leak-off pipe unions from injector cap nuts.
3. Remove the banjo union bolts and washers.
4. Remove the injector retaining nuts, withdraw injectors and sealing washers.

Refitting

5. Fit clean, spray-tested injectors.
   NOTE: Cleaning of injectors should be carried out to C.A.V. service instructions (see TB19–2).
6. Fit new sealing washers to injectors, fit injectors and secure evenly to torque in DATA.
7. Refit banjo union bolts and washers.
8. Refit leak-off pipe unions to injector cap nuts.
9. Reconnect injector pipes.
10. Bleed fuel system. TB50.07.

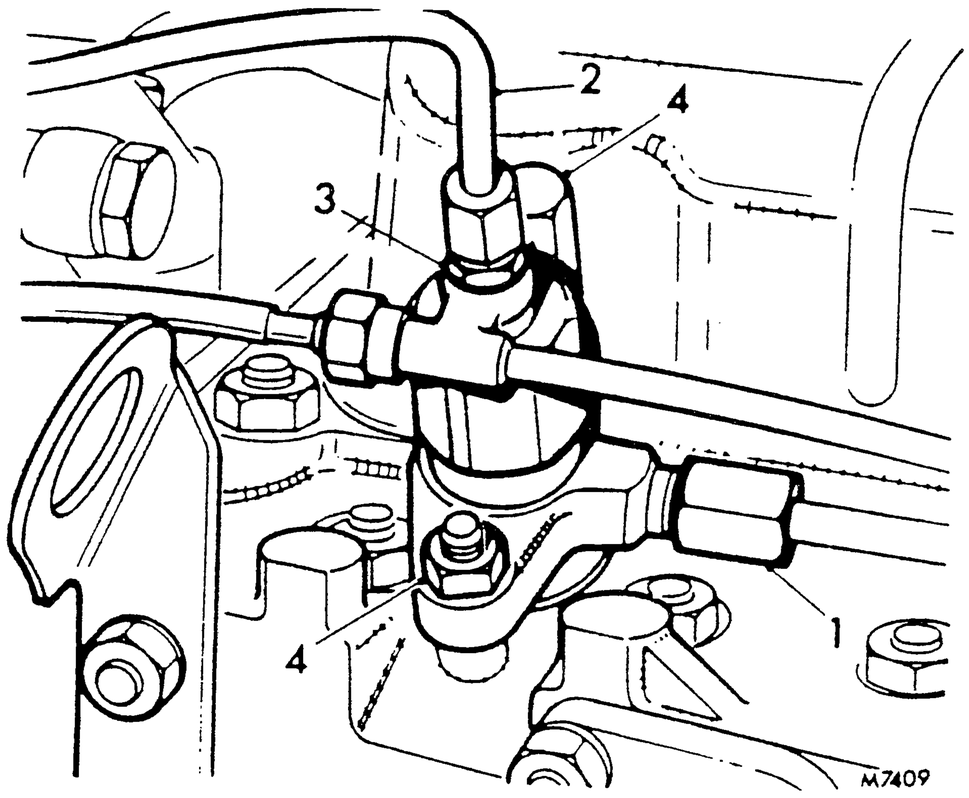

DATA

Torque tightening figures	Nm	kgf m	lbf ft
Injector securing nuts	16	1,7	12

https://tractormanualz.com/

** INJECTORS — ALL MODELS EXCEPT 245**

—Remove and refit TB19.60.01

Removing

1. Clean dirt from around injectors and unions.
2. Disconnect leak-off unions and move leak-off pipe clear of injectors.
3. Slacken pipe clamps and injection pump unions, as required, to enable injector pipes to be disconnected without bending.
4. Disconnect fuel delivery pipes and fit protective caps to injectors to prevent ingress of dirt; ensure no dirt enters pipe.
5. Remove securing bolts and withdraw injector and sealing washer.
   NOTE: Ensure no dirt enters bore while injector is removed.
6. Clean injectors externally and spray-test (see note on page TB19—2); service or replace if required.

Refitting

7. Reverse procedure 2 to 5, noting:
   a. Clean injector bore.
   b. Fit new sealing washer to injector (using grease) before replacing injector.
   c. Tighten injector securing bolts evenly to torque in DATA.
8. Bleed fuel system. TB19.50.07.

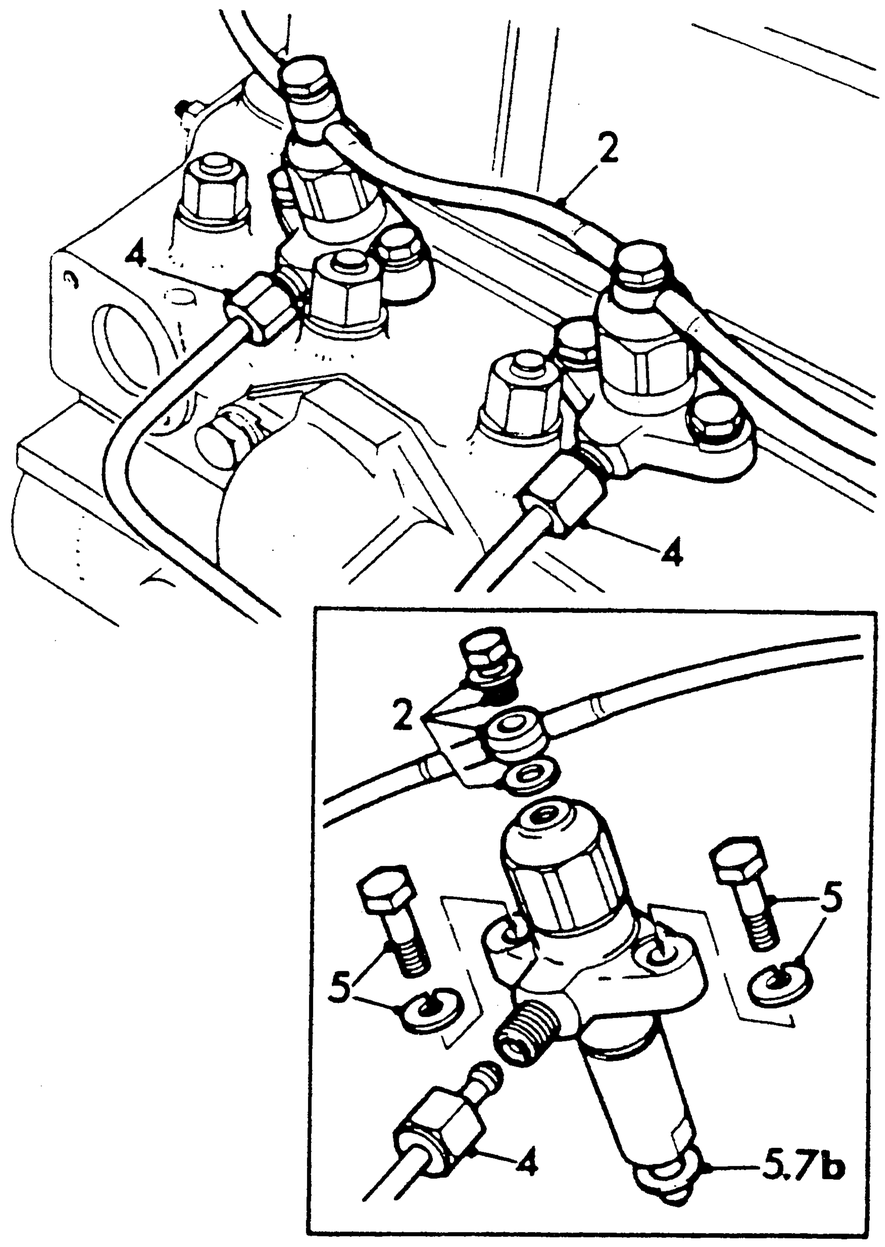

M6091

DATA

Torque tightening figures	Nm	kgf m	lbf ft
Injector securing bolts	16	1,7	12

https://tractormanualz.com/

** FAN BELT — ALL MODELS EXCEPT TURBO-CHARGED**

—Check and adjust TB26.20.09

Adjusting

1. Remove L.H. side panel and disconnect earth lead from battery negative (—) terminal.
2. Slacken adjusting link setscrew and pivot bolt(s).
3. Move alternator outward to tension drive belt, then tighten adjusting link setscrew and pivot bolt.
   NOTE: Do not apply leverage to any part of the alternator other than the alternator drive end bracket.
4. Check drive belt tension (see DATA), and adjust as necessary.
5. Connect earth lead to battery negative (—) terminal and fit L.H. side panel.

245

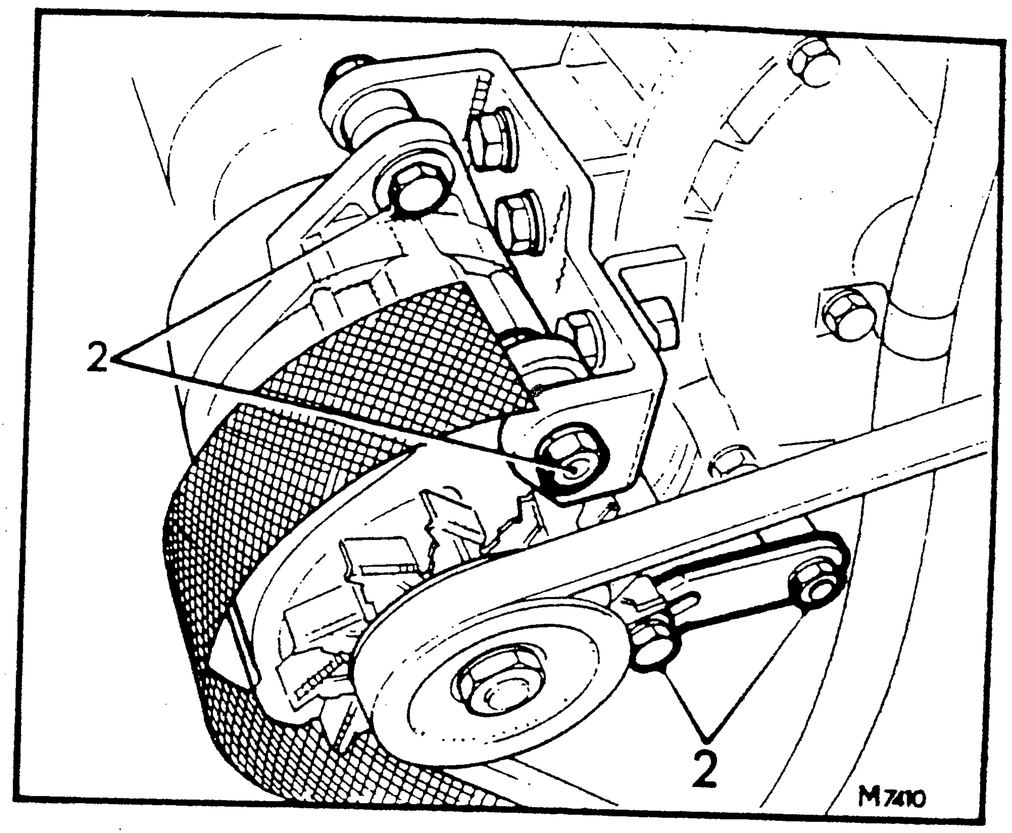

262/272/462/472

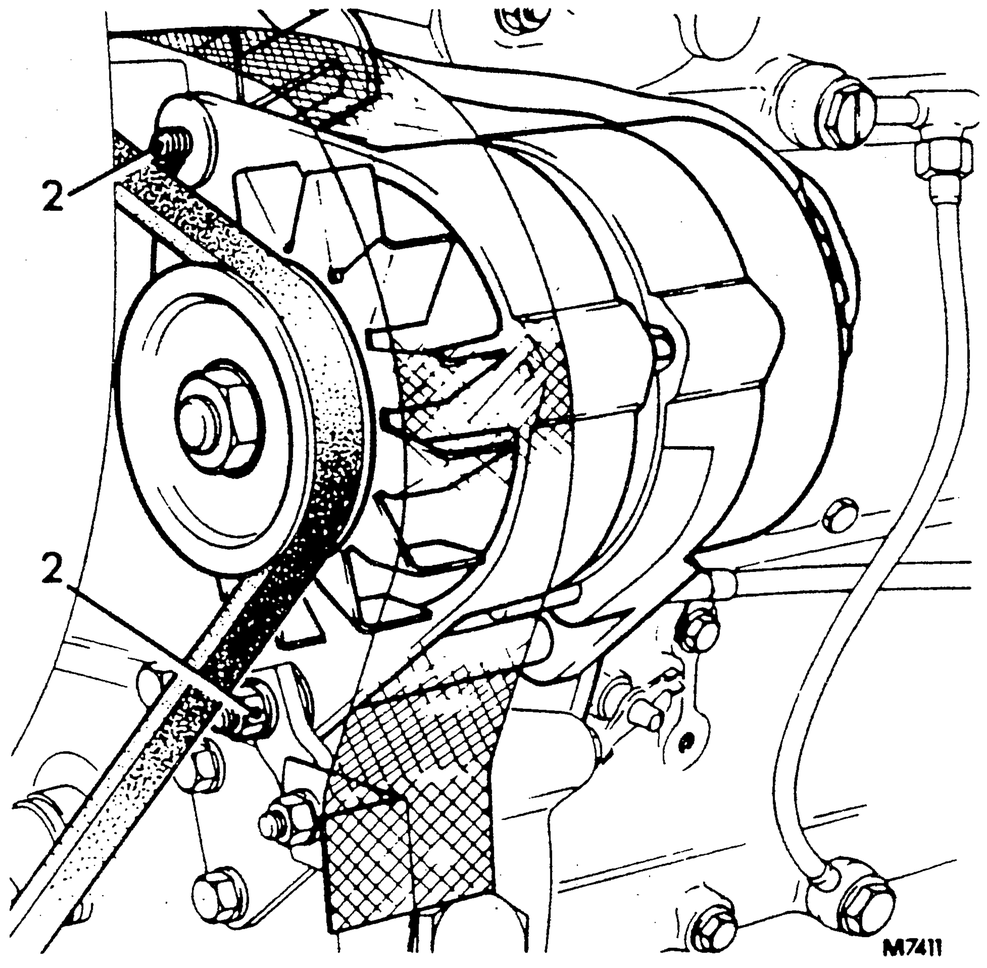

** FAN BELT — TURBOCHARGED MODELS

—Check and adjust TB26.20.09

Adjusting

1. Remove L.H. side panel, disconnect earth lead from battery negative (—) terminal and slacken the alternator mounting bolt.
2. Raise the bonnet and slacken adjusting link setscrews.
3. Ensure that the belt is correctly seated in the pulleys and move the alternator outwards to tension drive belt.
4. Tighten adjusting link setscrews and pivot bolt, check belt tension (see DATA) and adjust as necessary.
   NOTE: Do not apply leverage to any part of the alternator other than the alternator drive bracket.
5. Connect earth lead to battery and fit side panel.

282/482

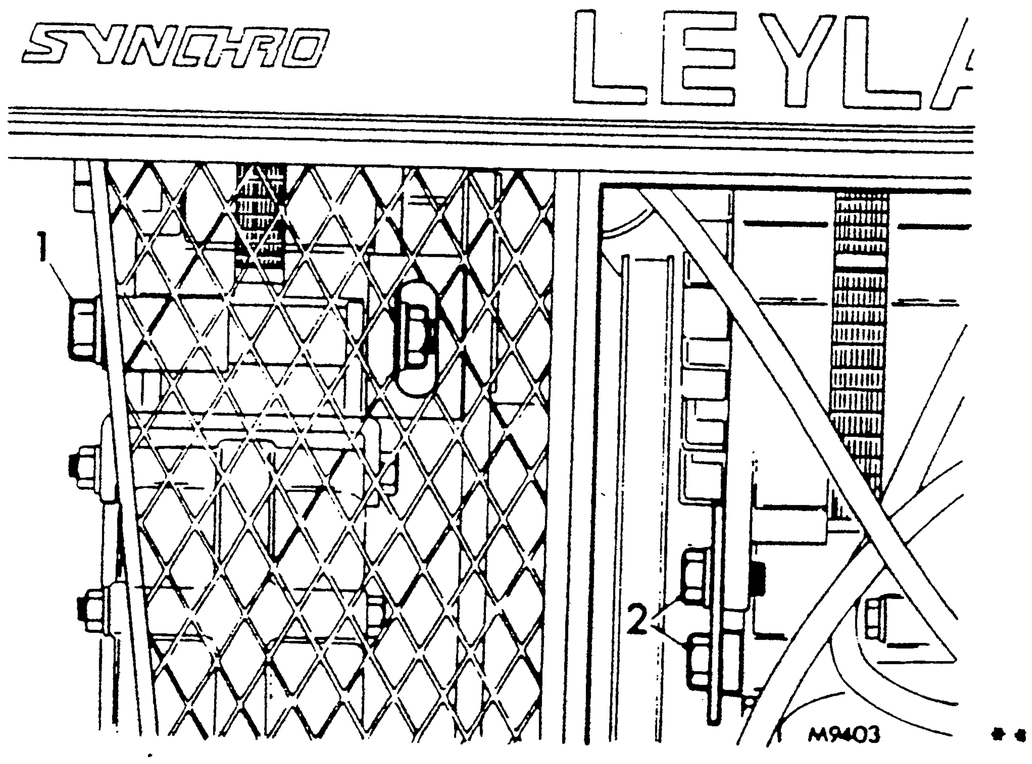

DATA

Drive belt tension . . . . . 13 mm (½ in) total deflection at centre of longest belt run, under normal thumb pressure

https://tractormanualz.com/

FAN BELT—245

—Remove and refit TB26.20.10

Removing

1. Follow procedure 1 to 6 on alternator remove and refit TB86.10.02.
2. Manoeuvre fan belt over fan and withdraw.

Refitting

3. Manoeuvre fan belt over fan and position on pulleys.
4. Follow procedure 9 to 13 on alternator remove and refit TB86.10.02.

FAN BELT — ALL MODELS EXCEPT 245

—Remove and refit TB26.20.10

Removing

1. Follow procedure 1 to 6 (1 to 5 turbocharged models) on alternator remove and refit. TB86.10.02.
2. Manoeuvre fan belt over fan and withdraw from radiator cowl.

Refitting

3. Manoeuvre fan belt through radiator cowl and over fan and position on pulleys.
4. Follow procedure 11 to 15 (operation 8 turbocharged models) on alternator remove and refit. TB86.10.02.

RADIATOR BOTTOM HOSE — 262/272/462/472

—Remove and refit TB26.30.07

Hose—elbow to water pump 1—6, 8—10 TB26.30.22

Removing

1. Drain coolant. TB10.
2. Remove L.H. side panel.
3. Disconnect lead from battery negative (—) terminal.
4. Remove alternator. TB86.10.02.
5. Slacken clips on upper hose.
6. Slacken clip on elbow end of bottom hose.
7. Slacken clip on radiator end of bottom hose.
8. Remove bolt holding elbow.
9. Manoeuvre hose(s) and elbow to remove.

Refitting

10. Reverse procedure in 1 to 9, noting:
    a. Ensure clip securing hose to radiator is positioned to enable it to be tightened by a screwdriver inserted through the access hole in the radiator frame.
    b. Refill with coolant.

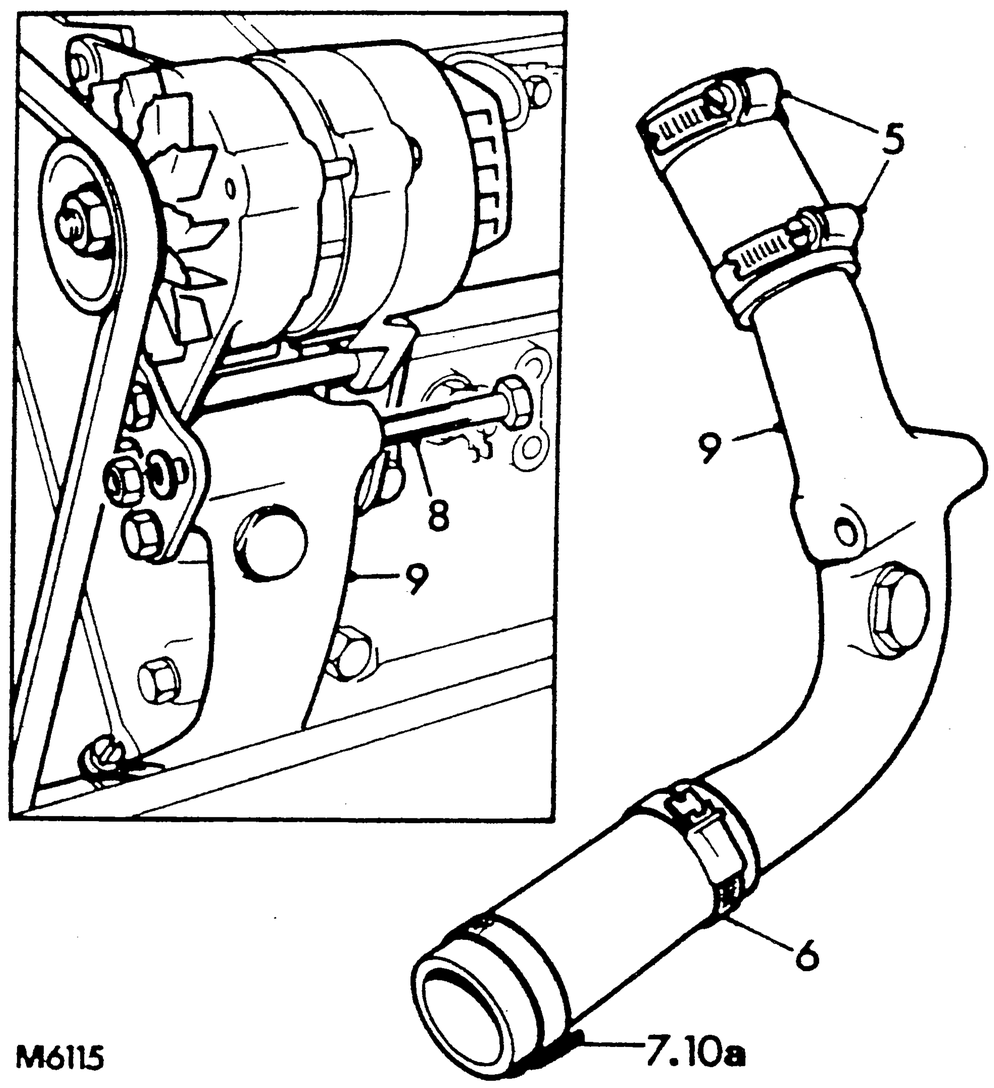

M6115 7.10a

**TB26.20.10
TB26.30.22 Sheet 1**

** RADIATOR BOTTOM HOSE — 282/482

—Remove and refit TB26.30.07

Hose — elbow to water pump TB26.30.22

Removing

1. Drain coolant. TB10.
2. Remove L.H. side panel and disconnect earth lead from battery negative (—) terminal.
3. Slacken bolt securing elbow to support bracket and withdraw fan belt guard.
4. Slacken clips on elbow upper hose.
5. Slacken clips on bottom hose.
6. Remove bolt securing elbow to bracket.
7. Manoeuvre elbow and hose(s) from tractor.

Refitting

8. Reverse procedure 1 to 7, noting:
   a. Ensure clip securing bottom hose to radiator can be tightened through the access hole in the radiator frame.
   b. Refill with coolant. TB10.**

** BY-PASS HOSE — ALL MODELS EXCEPT 245**

—Remove and refit TB26.30.46

Removing

1. Disconnect battery and drain cooling system.
2. Slacken lower clip and lever hose from water pump.
3. Slacken upper clip and pull hose from thermostat housing.
4. Remove clips from hose.

Refitting

5. Fit clips on hose, ensuring they will be in a suitable position for tightening when hose is fitted.
6. Position hose and tighten clips.
7. Connect battery and refill cooling system.

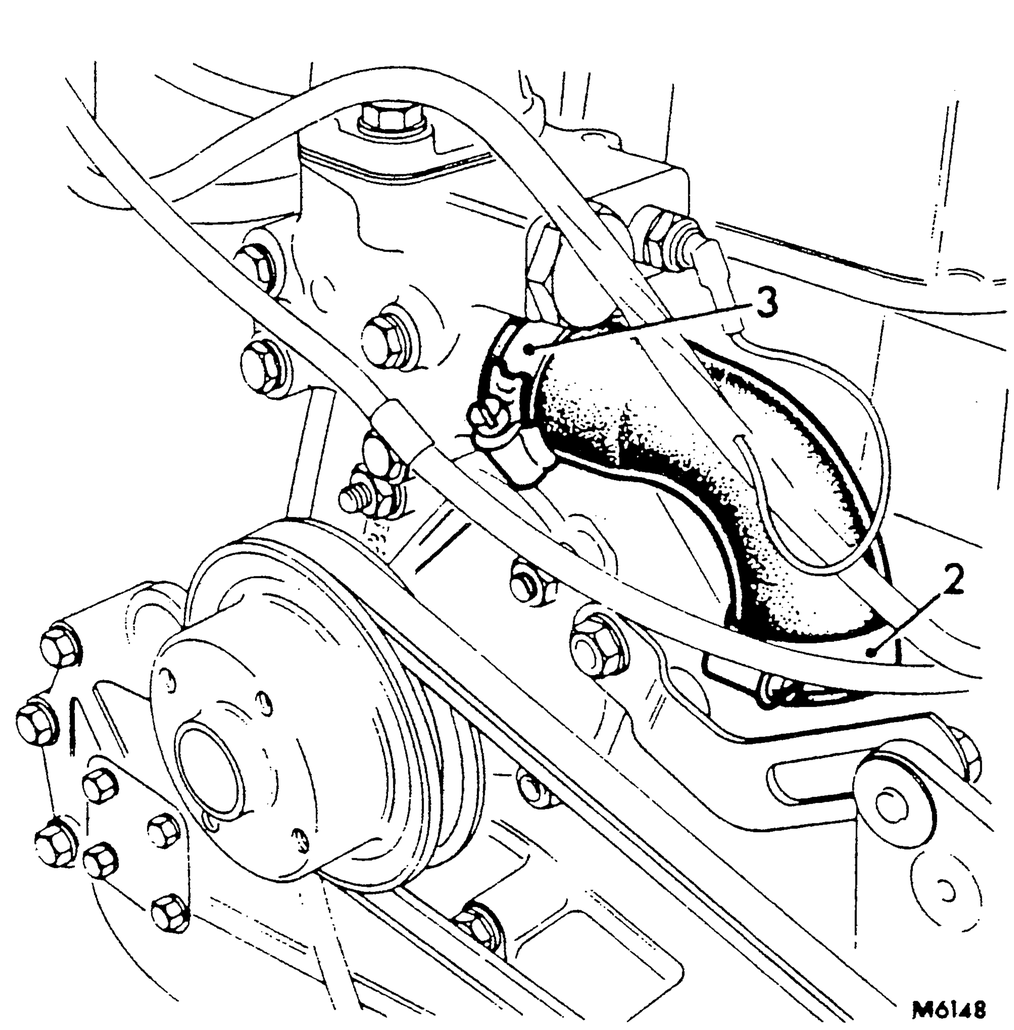

Sheet 2 TB26.30.07

https://tractormanualz.com/

RADIATOR–245

–Remove and refit **TB26.40.03**

Removing

1. Remove both side panels and disconnect earth lead from battery negative (–) terminal.
2. Release and raise bonnet, disconnect windscreen washer pipe and slacken nuts on bonnet hinges to finger-tight.
3. Release bonnet stay from fuel tank bracket, remove nuts and lift off bonnet.
4. Drain cooling system. TB10.
5. Remove front bonnet hinge, noting spacers.
6. Release wiring harness from clips, disconnect windscreen washer pump and remove right-hand side surround complete with pump and bottle.
7. Remove left-hand side surround and lift off front surround.
8. Disconnect overflow pipe, top and bottom hoses from radiator.
9. Remove setscrews securing radiator to frame and withdraw radiator.

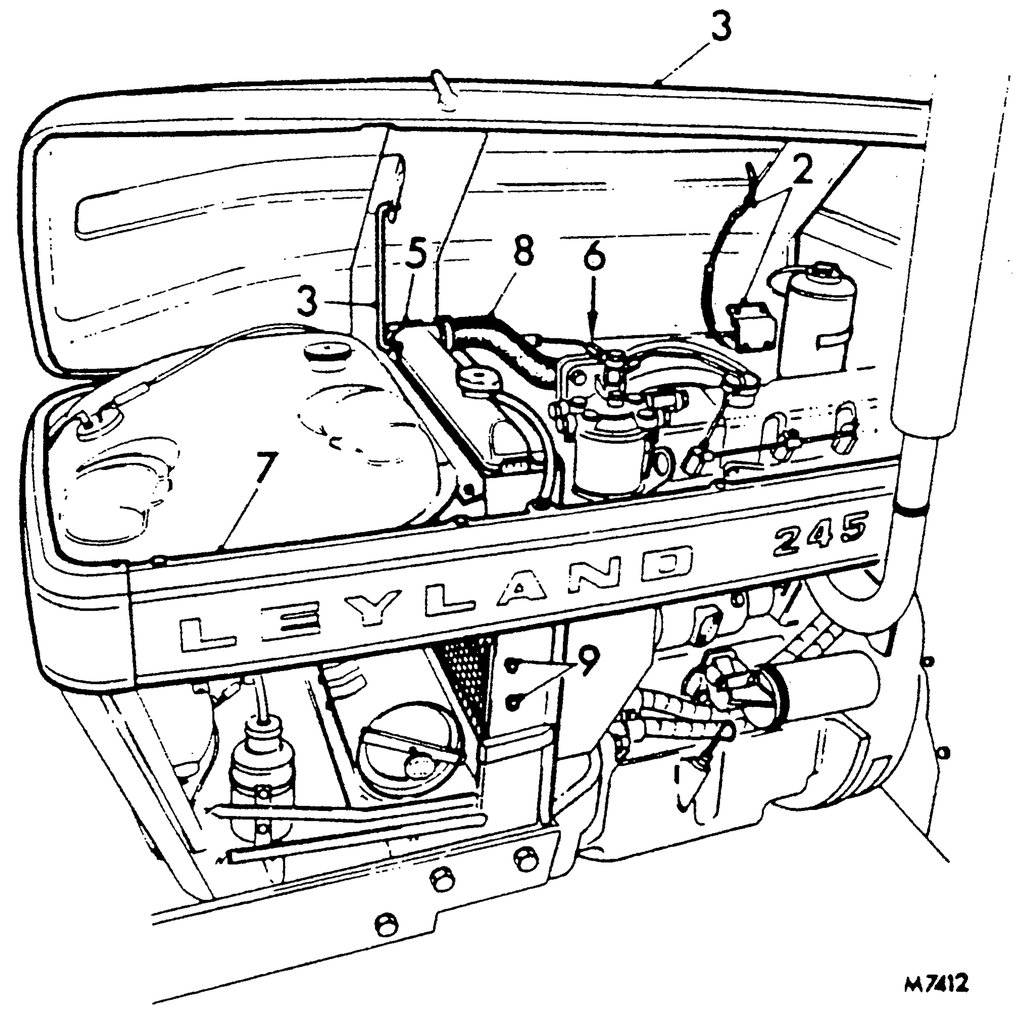

M7412

Refitting

10. Refit radiator and secure with setscrews to frame.
11. Connect overflow pipe, top and bottom hoses to radiator.
12. Refit left-hand side surround and front surround.
13. Refit right-hand side surround with pump and bottle, connect washer pump and re-clip wiring harness.
14. Fit front bonnet hinge to radiator frame with spacers between hinge and frame.
15. Refill cooling system. TB10.
16. Fit bonnet, adjust as necessary and connect pipe to windscreen washer jet.
17. Refit both side panels and reconnect battery.

https://tractormanualz.com/

** RADIATOR — ALL MODELS EXCEPT 245**

—Remove and refit TB26.40.03

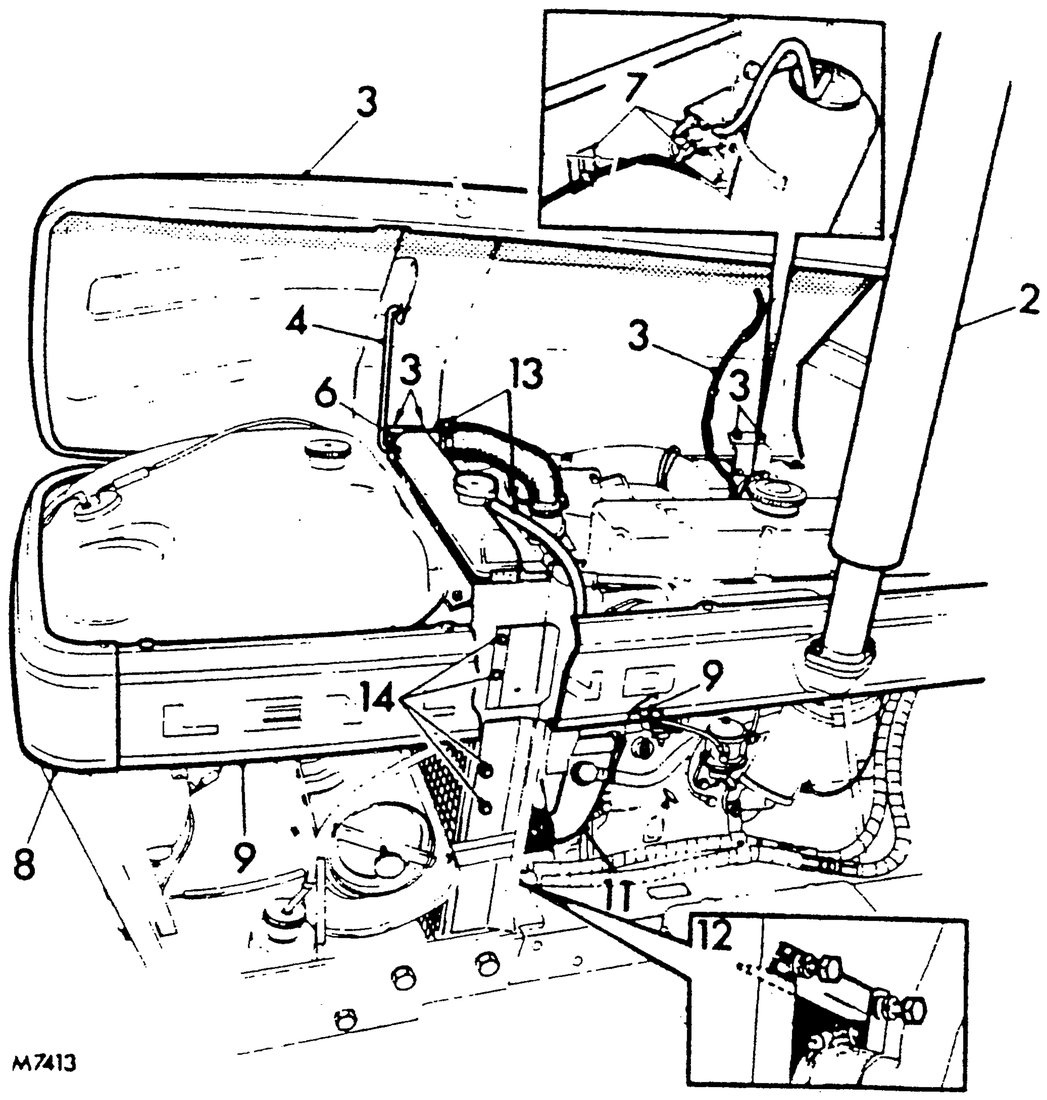

Removing

1. Remove both side panels and disconnect earth lead from battery negative (—) terminal.
** 2. Remove exhaust silencer/stack pipe turbocharged models.**
3. Release and raise bonnet, disconnect windscreen washer pipe and slacken nuts on bonnet hinges to finger-tight.
4. Release bonnet stay at fuel tank bracket, remove nuts and lift off bonnet.
5. Drain cooling system. TB10.
6. Remove front bonnet hinge from radiator frame, noting spacers.
7. Release wiring harness clips, disconnect windscreen washer pump and remove right-hand side surround complete with pump and bottle.
8. Remove front surround.
9. Unclip fuel pipe and remove left-hand side surround.
10. Disconnect and remove alternator. TB86.10.02.
11. Release hoses from water pump and radiator and remove connecting pipe with hoses.
12. Unscrew setscrews and remove the plate on back of radiator, over bottom water hose connection.
13. Disconnect top hose and overflow pipe at radiator.
14. Remove setscrews securing radiator, and air intake casting on turbocharged models, to frame; lift out radiator.

Refitting

15. Fit radiator and secure to frame, noting on turbocharged models the air intake casting is also secured to frame.
16. Fit radiator top hose.
17. Fit water connecting pipe and secure hoses at water pump and radiator.
18. Fit alternator. TB86.10.02.
19. Check and adjust fan belt. TB26.20.09.
20. Fit plate above bottom water hose and secure.
21. Fit left-hand side surround.
22. Replace front surround.
23. Refit right-hand side surround complete with pump and bottle, connect washer pump and reclip wiring harness.
24. Fit front bonnet hinge to radiator frame with spacers between hinge and frame.
25. Refill cooling system. TB10.
26. Fit bonnet, adjust as necessary, and connect pipe to windscreen washer jet.
** 27. Clean joint faces and using a new gasket fit exhaust silencer/refit and secure stack pipe on turbocharged models.**
28. Refit both side panels and reconnect battery.

https://tractormanualz.com/

THERMOSTAT — 245

—Remove and refit TB26.45.01

Removing

1. Partially drain cooling system. TB10.
2. Remove top hose.
3. Remove nuts and bolts retaining fuel filter to thermostat housing.
4. Clean old gasket from housing and outlet pipe.
5. Lift out thermostat.

Refitting

6. Reverse procedure 1 to 5, using a new gasket and ensuring thermostat is correct way up with mark 'RAD' on the upper face towards radiator.

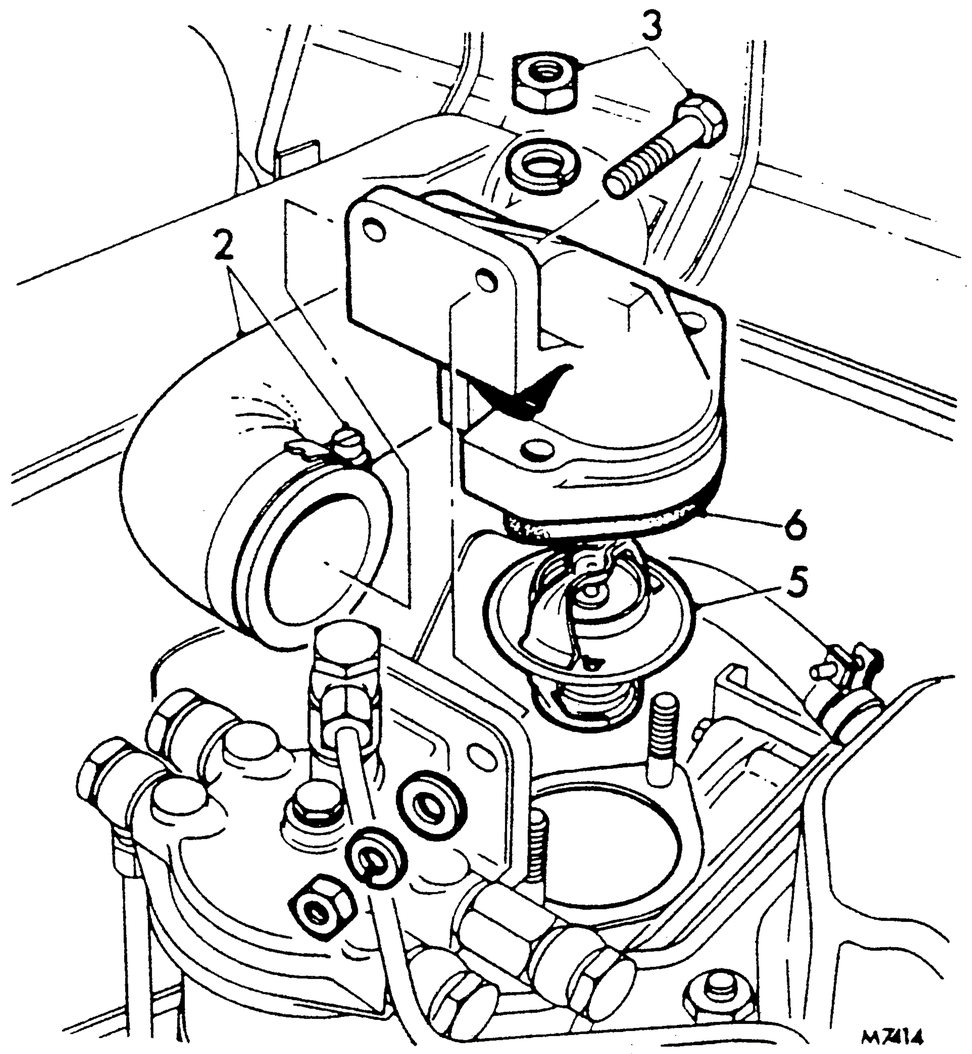

** THERMOSTAT — ALL MODELS EXCEPT 245**

—Remove and refit TB26.45.01

Removing

1. Partially drain cooling system. TB10.
2. Remove top hose.
3. Remove two screws securing outlet pipe to housing and detach outlet pipe.
4. Clean old gasket from housing and outlet pipe.
5. Lift out thermostat.

Refitting

6. Reverse procedure in 1 to 5, using a new gasket and ensuring thermostat is correct way up with mark 'RAD' on the upper face towards radiator.
   IMPORTANT: The correct thermostat (see Parts List), has a spring loaded disc which closes the port beneath it to prevent recirculation through the by-pass when the thermostat opens. If a wrong thermostat is fitted (even if the opening temperature is correct) damage to the engine will result due to overheating.

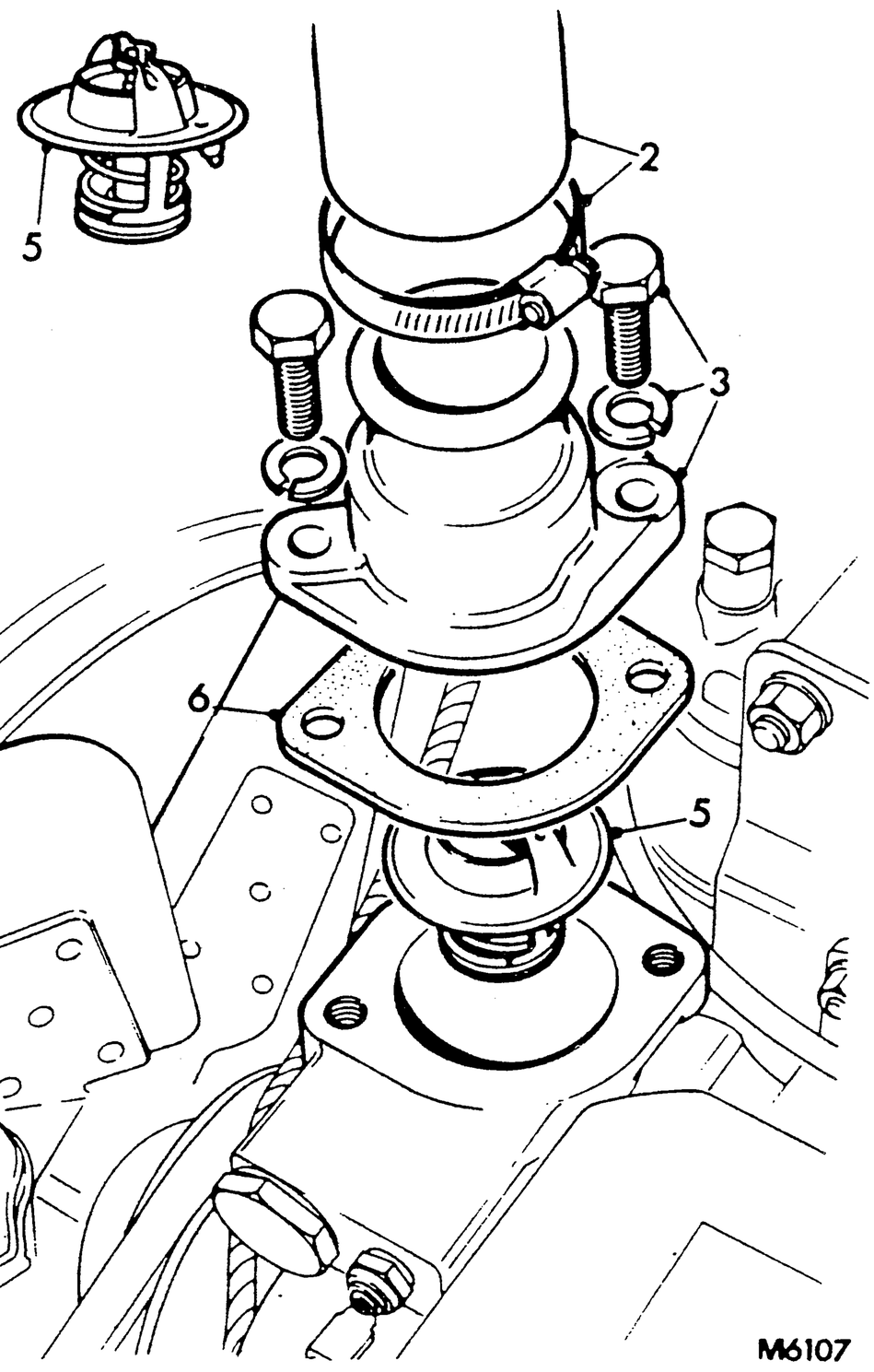

THERMOSTAT – ALL MODELS

–Test

TB26.45.09

1. Remove thermostat. TB26.45.01.
2. Check that correct type of thermostat is fitted, see Parts List.
   IMPORTANT: If a wrong type of thermostat is fitted, even if the opening temperature is correct, damage to the engine will result due to overheating.
3. Renew thermostat if it is stuck open.
4. Place thermostat in a container of water and heat the water, noting the water temperature at which the thermostat opens. The nominal temperature in deg. C at which the thermostat opens is stamped on the body. Renew thermostat if the opening temperature is incorrect.
5. Refit thermostat. TB26.45.01.

WATER PUMP–245

–Remove and refit

TB26.50.01

Removing

1. Lift bonnet, remove left- and right-hand side panels and disconnect earth lead from battery negative (–) terminal.
2. Remove alternator and fan belt. TB86.10.02.
3. Drain cooling system. TB10.
4. Remove fan blades.
5. Remove by-pass hose from thermostat housing.
6. Remove hose from cylinder block at water pump.
7. Remove bottom hose from radiator at water pump.
8. Remove bolts securing water pump to timing cover and withdraw pump.

Refitting

9. Position water pump, fitting new gasket, and secure to timing cover.
10. Refit heater hose.
11. Refit radiator bottom hose at water pump.
12. Refit hose from cylinder block at water pump.
13. Refit by-pass hose to thermostat housing.
14. Refit fan blades.
15. Refit alternator and fan belt. TB86.10.02.
16. Refill cooling system. TB10.
17. Connect battery, refit side panels and secure bonnet.

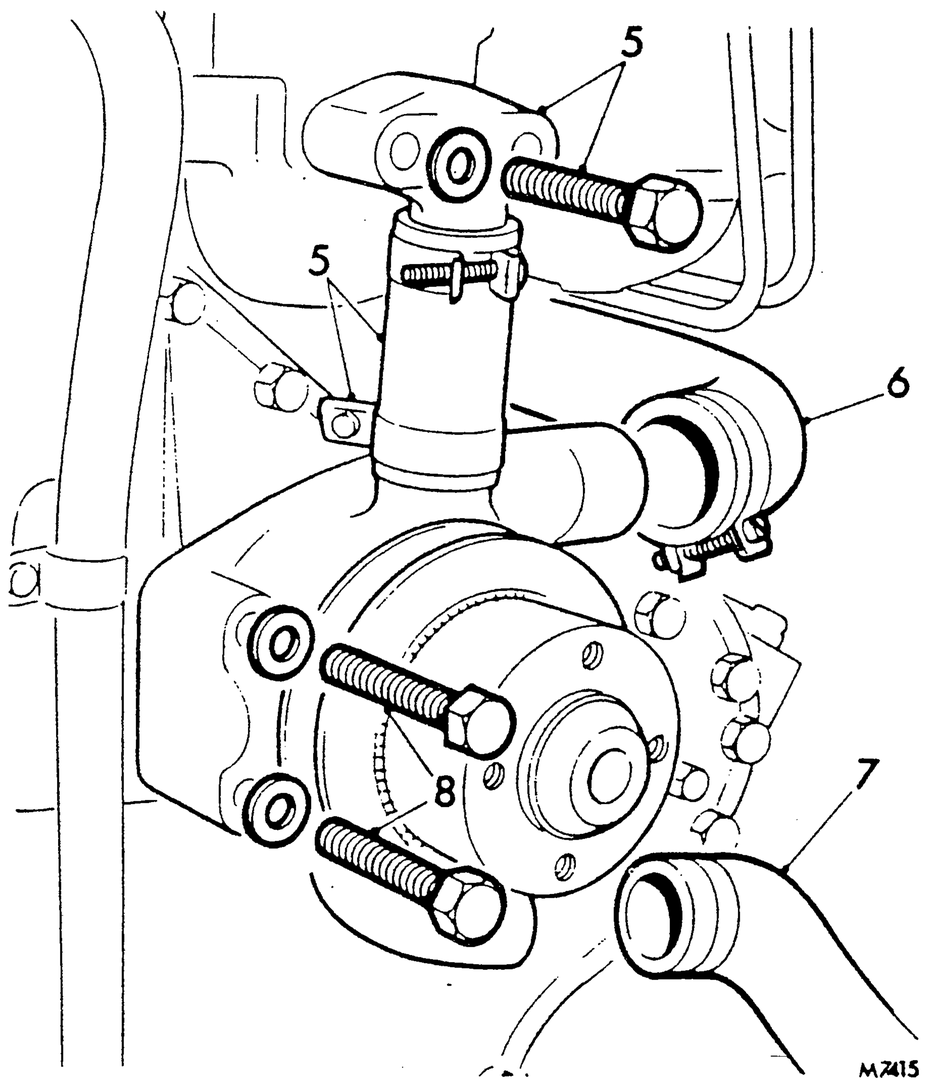

https://tractormanualz.com/

** WATER PUMP — ALL MODELS EXCEPT 245**

—Remove and refit TB26.50.01

Removing

1. Remove radiator. TB26.40.03.
2. Remove setscrews and manoeuvre fan and spacer clear.
3. Withdraw fan pulley.
4. Slacken clips and remove by-pass hose.
5. ** Remove alternator adjusting link (all models except turbocharged). **
6. Unscrew setscrews securing pump body.
7. Support the assembly, tap to release from engine block and remove.
8. Clean gasket from block and pump body.

Refitting

9. Fit a new gasket.
10. Refit pump body assembly and secure.
11. ** Refit alternator adjusting link (all models except turbocharged). **
12. Reconnect by-pass hose.
13. Refit fan pulley.
14. Position spacer, fan and tighten setscrews.
15. Refit radiator. TB26.40.03.
16. Check for leaks when engine is hot.

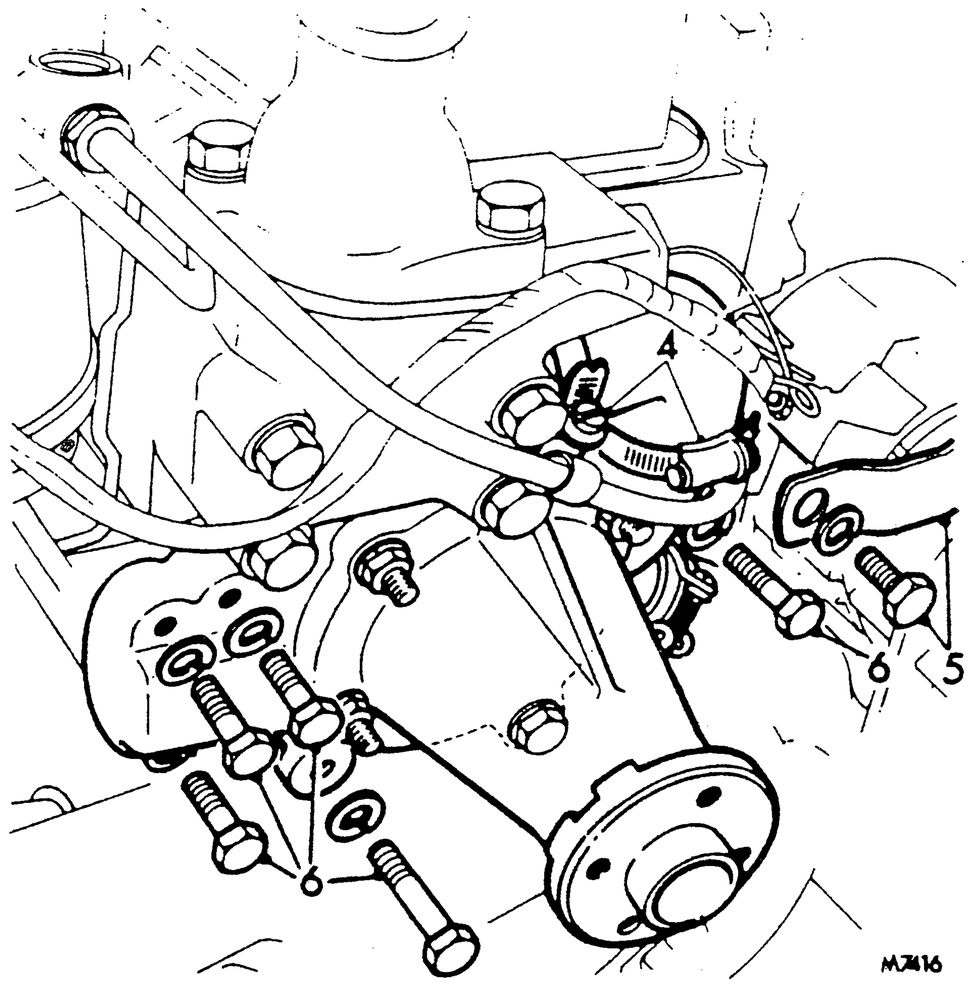

https://tractormanualz.com/

WATER PUMP ASSEMBLY – 245

–Overhaul TB26.50.06

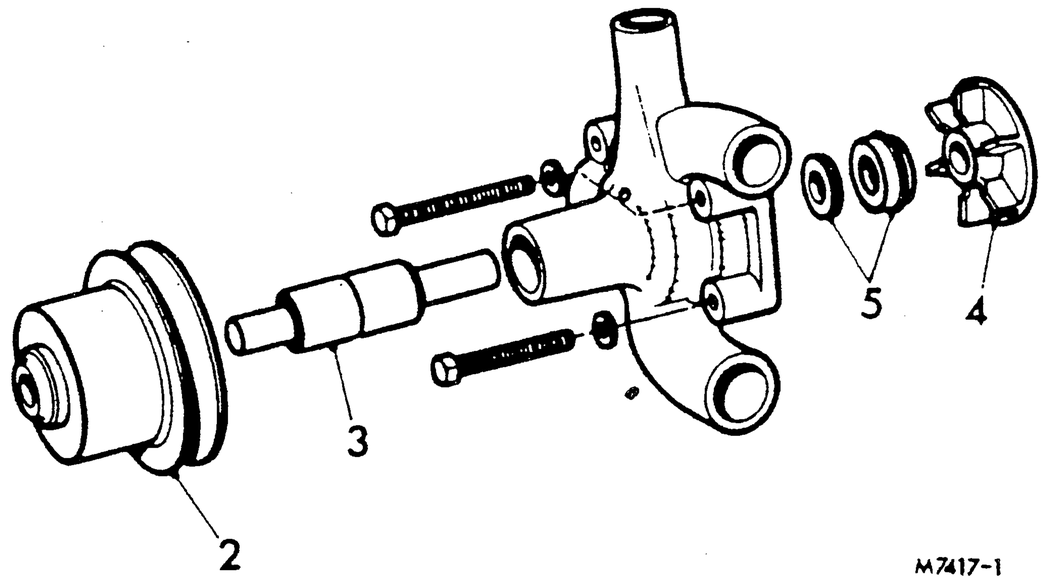

M7417-1

Dismantling

1. Remove water pump, TB26.50.01.
2. Remove pulley from spindle with a suitable extractor.
3. Press out pump spindle, complete with bearing and impeller, rearwards from the pump body.
4. Press the spindle and bearing assembly from the impeller.
5. Detach seal and water thrower.

Reassembling

6. Clean components and renew if damaged or worn.
   NOTE: Check bores, spindle and bearing are within tolerances in DATA. Renew if necessary to ensure correct interference fits.
7. Press spindle and bearing assembly into pump body until bearing housing end is flush with front of pump body.
8. Refit water thrower, apply jointing compound to brass surround of water seal and fit seal into pump body.
9. Refit impeller to give clearance specified in DATA.
10. Refit pulley to dimension given in DATA.

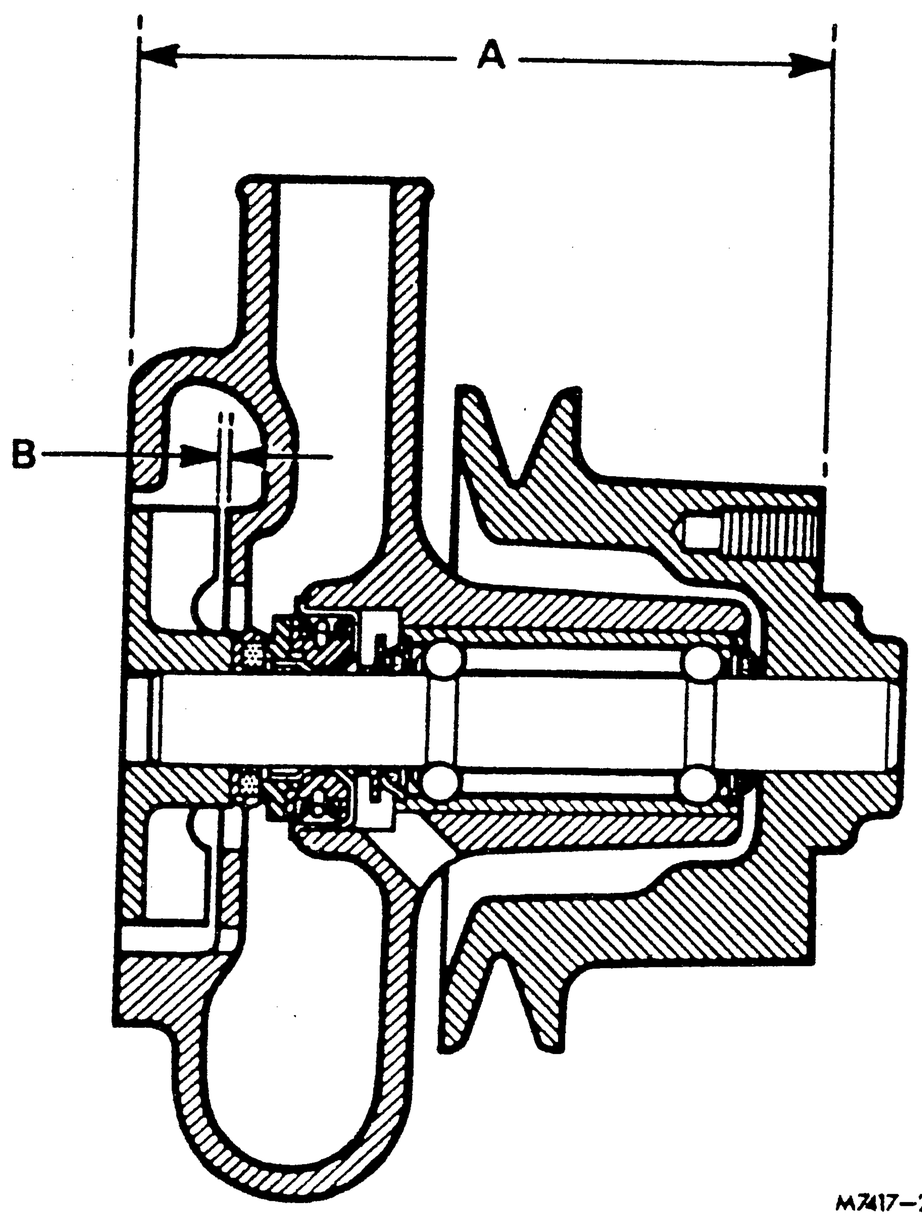

M7417–2

DATA

Water pump

Pulley bore diameter	15,85 to 15,87 mm (0.6239 to 0.6247 in)
Spindle diameter	15,91 to 15,92 mm (0.6262 to 0.6267 in)
Interference fit of pulley on spindle	0,04 to 0,07 mm (0.0015 to 0.0028 in)
Impeller bore diameter	15,88 to 15,89 mm (0.6250 to 0.6257 in)
Interfernce fit of impeller on spindle	0,01 to 0,04 mm (0.0005 to 0.0017 in)

Assembly dimensions:

A = 112,7 mm (4.475 in)

B = 0,25 to 0,51 mm (0.010 to 0.020 in)

https://tractormanualz.com/

WATER PUMP ASSEMBLY — ALL MODELS EXCEPT 245

—Overhaul TB26.50.06

Dismantling

1. Remove radiator. TB26.40.03.
2. Remove fan blade, pulley and the four nuts holding the impeller cover.
3. Tap edge of cover to break seal and withdraw impeller assembly from water pump housing.
4. Pull or press hub from spindle.
5. Support pump body and press out bearing assembly complete with spindle and impeller.
6. Press impeller off spindle.
7. Remove water seal from spindle.

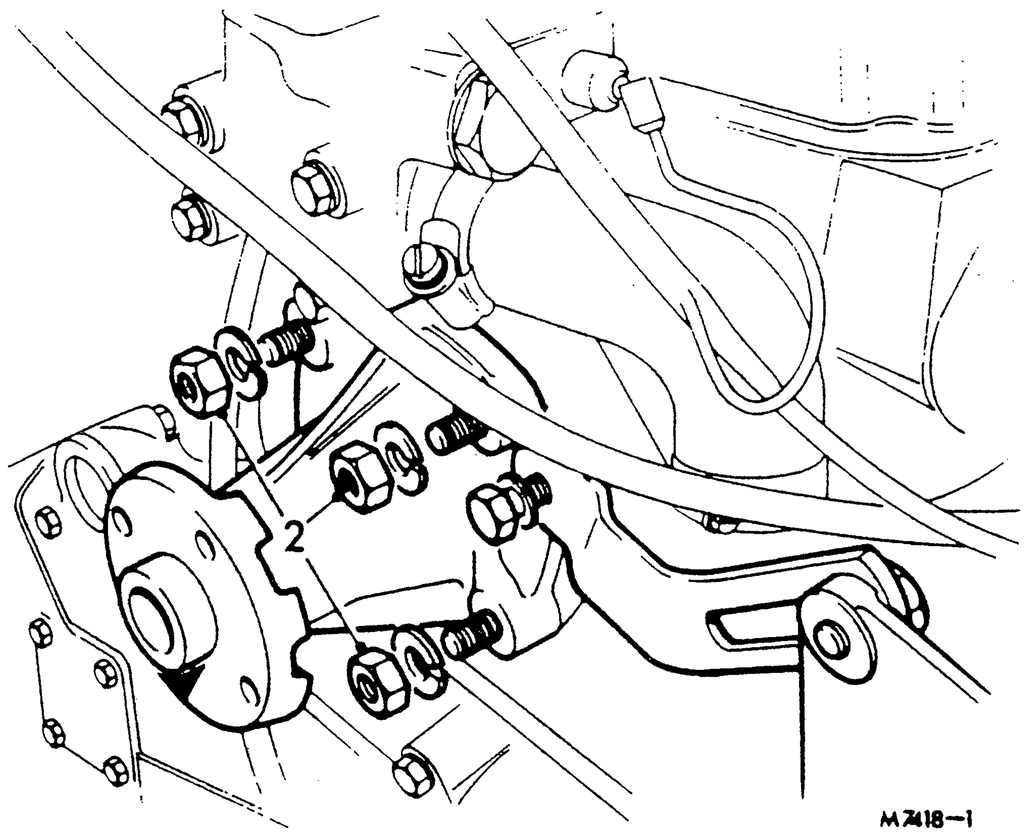

Reassembling

8. Clean components and renew if damaged or worn.
   NOTE: Check bores, spindle and bearing are within tolerances in DATA. Renew if necessary to ensure correct interference fits.
9. Press bearing assembly into pump body.
10. Support spindle and press pulley hub onto spindle to dimension in DATA.
11. Fit water seal.
12. Support spindle and press impeller onto spindle to dimension in DATA.
13. Using a new gasket, fit impeller assembly to water pump housing and secure.
14. Refit pulley and fan blade.
15. Refit radiator. TB26.40.03.

continued

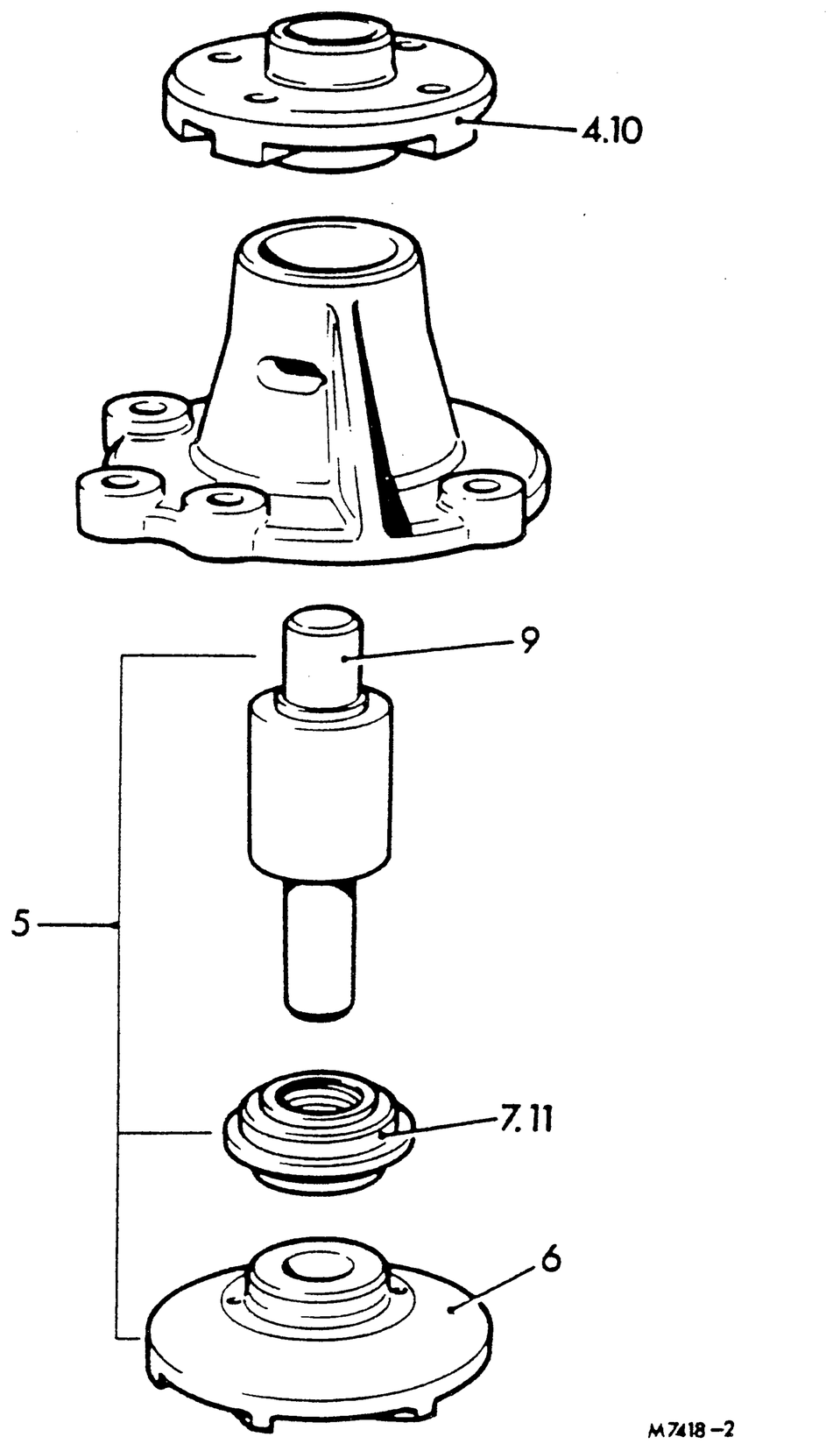

https://tractormanualz.com/

LIST OF OPERATIONS

Manifolds
— exhaust manifold — and/or gaskets — remove and refit TB30.15.10
— induction manifold — and/or gaskets — remove and refit TB30.15.02
**Turbocharger
— remove and refit TB30.15.16
— overhaul TB30.15.17**

https://tractormanualz.com/

INDUCTION MANIFOLD AND/OR GASKETS—245

—Remove and refit TB30.15.02

Removing

1. Disconnect wire from Thermostart unit.
2. Disconnect air induction hose from manifold.
3. Disconnect fuel pipe from thermostat unit.
4. Remove lift pump. TB19.45.09.
5. Remove bolts and withdraw inlet manifold.
6. Remove gaskets and clean joint faces.

Refitting

7. Grease joint faces and fit gaskets.
8. Position inlet manifold, refit bolts and secure.
9. Refit fuel pipe to thermostat unit.
10. Refit lift pump. TB19.45.09.
11. Connect air induction hose to manifold.
12. Connect wire to Thermostart unit.

INDUCTION MANIFOLD AND/OR GASKETS — ALL MODELS EXCEPT 245

—Remove and refit TB30.15.02

Removing

NOTE: Protect injection pump, injectors and fuel pipes against dirt entering, while the pipes are removed.

1. Remove side panels and disconnect earth lead from battery negative (—) terminal.
2. Remove fuel pipes, filter to injection pump.
3. Remove Nos. 2 and 3 injector pipes and remove clips.

** 4. Disconnect air filter rubber hose from top of manifold. Disconnect and detach inlet elbow; turbocharged models.**

5. Remove bolts and washers and manoeuvre the manifold clear.
6. Remove gaskets and clean joint faces.

Refitting

7. Blow out manifold with air to remove all loose dirt.
8. Grease joint faces and fit gaskets.
9. Reverse procedure 1 to 5, ensuring all joints are made air-tight, and no dirt is allowed to enter the fuel system.

https://tractormanualz.com/

EXHAUST MANIFOLD AND/OR GASKETS—245

—Remove and refit TB30.15.10

Removing

1. Remove exhaust silencer.
2. Remove nuts, washers and withdraw exhaust elbow and gasket.
3. Remove nuts, washers and withdraw exhaust manifold from studs.
4. Remove gaskets from studs.

Refitting

5. Grease joint faces and fit gaskets.
6. Reverse procedure 1 to 3, ensuring all joints are airtight.

EXHAUST MANIFOLD AND/OR GASKETS — 262/272/462/472

—Remove and refit TB30.15.10

Removing

1. Remove exhaust system and gasket.
2. Remove nuts, washers and withdraw exhaust manifold from studs.
3. Remove gaskets from studs.

Refitting

4. Grease joint faces and fit gaskets.
5. Reverse operations 1 and 2, ensuring all joints are made air-tight and tightening nuts to torque in DATA.

DATA

Torque tightening figures	Nm	kgf m	lbf ft
Exhaust manifold nuts	68	6,9	50

**EXHAUST MANIFOLD AND/OR GASKETS — TURBOCHARGED MODELS

— Remove and refit TB30.15.10

Removing

1. Disconnect earth lead from battery negative (—) terminal and lift bonnet.
2. Remove stack pipe and L.H. side surround.
3. Slacken clips securing turbocharger oil drain pipe flexible hose; slide hose down onto lower pipe.
4. Remove fan belt guard.
5. Disconnect oil feed pipe at turbocharger.
6. Disconnect air intake hose.
7. Remove nuts, washers and withdraw exhaust manifold from studs.
8. Remove gaskets from studs.

Refitting

9. Grease joint faces and fit gaskets.
10. Reverse operations 1 to 7, ensuring all joints are made air-tight and tightening nuts to torque in DATA, noting:
    a. When fitting the turbocharger pour clean engine oil into inlet aperture until oil is level with aperture flange. Rotate compressor wheel to lubricate internal components.
    b. Fit new joint to turbocharger oil feed pipe.
    c. If turbocharger is removed from manifold fit a new gasket ensuring joint faces are clean.

DATA

Torque tightening figures	Nm	kfg m	lbf ft
Exhaust manifold nuts	68	6,9	50**

https://tractormanualz.com/

TURBOCHARGER

— Remove and refit TB30.15.16

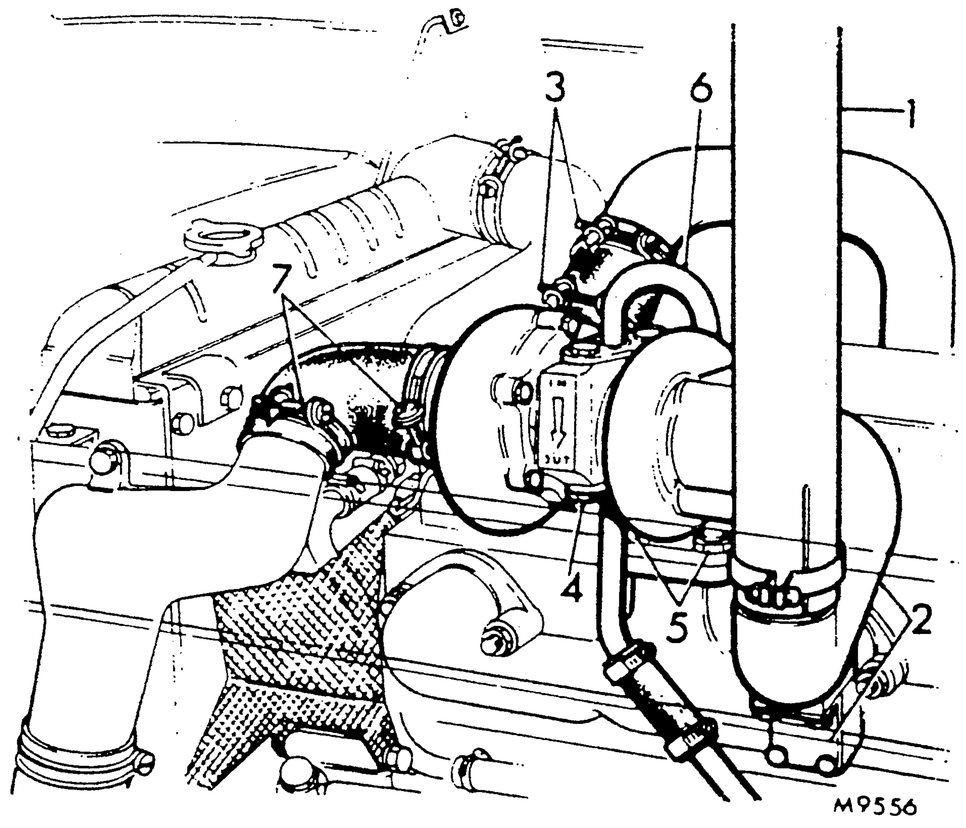

Removing

1. Remove L.H. side panel and disconnect battery negative (—) terminal; raise bonnet and remove exhaust stack pipe.
2. Remove bolts securing exhaust elbow to turbocharger and elbow support bracket to exhaust manifold; manoeuvre elbow clear of side surround.
3. Slacken hose clips between turbocharger and inlet manifold elbow.
4. Remove bolts securing oil drain pipe to turbocharger.
5. Remove nuts and washers securing turbocharger to exhaust manifold.
6. Disconnect oil feed pipe.
7. Release clip securing air intake hose elbow to turbocharger; remove turbocharger from tractor.

Refitting

8. Reverse procedure 1 to 7, using new gaskets, noting:
   a. Inspect air filter, air intake system, exhaust manifold oil supply pipe and oil drain pipe to ensure they are not restricted, leaking or contain any foreign material.
   b. Prime turbocharger with clean engine oil before connecting oil feed pipe.
   c. With oil drain pipe removed, position a suitable container beneath the turbocharger oil outlet aperture. With the engine stop pulled out, crank engine using the starter motor until a continuous flow of oil emerges from the oil outlet aperture.
   d. Check/top-up the engine oil level, see TB10.

TURBOCHARGER

— Overhaul TB30.15.17

Service tools: 2801, TX 20

Dismantling

NOTE: Make sure that correct overhaul kit is obtained prior to dismantling unit.

1. Clamp turbine inlet flange in vice with turbine housing upright.
2. Reference-mark for reassembly relative positions of turbine housing, bearing housing and compressor cover.
3. Remove setscrews and washers securing compressor cover to bearing housing; lift off cover.
4. Remove setscrews and washers securing turbine housing to bearing housing, lift core assembly clear of turbine housing.
5. Hold turbine wheel hub in vice, then taking care not to bend shaft, remove compressor locknut.
   NOTE: Compressor locknut has a left-hand thread.
6. Slide compressor wheel off shaft.
7. Remove compressor backplate and O-ring. Push flinger sleeve from backplate and remove piston ring from sleeve.

https://tractormanualz.com/

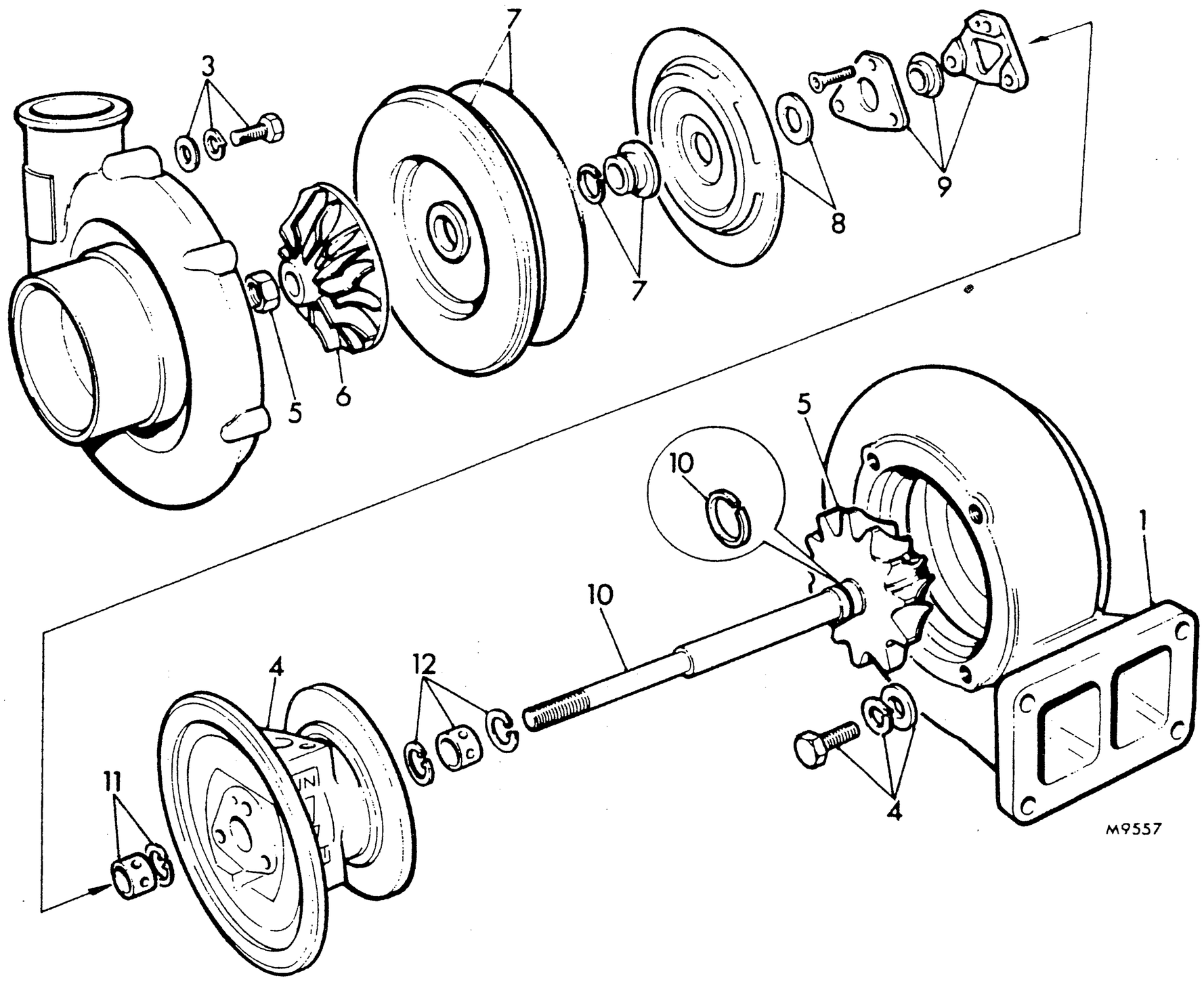

8. Remove oil deflector and thrust ring.
9. Remove countersunk screws and washers using tools 2801 and TX 20, then remove thrust bearing, thrust collar and spacer plate.
10. Withdraw shaft and wheel assembly from bearing housing, remove piston ring from shaft.
11. Withdraw compressor end bearing and remove snap-ring.
12. Remove outer snap-ring, bearing and inner snap-ring from turbine end of housing.

Inspection

13. Clean all parts thoroughly, noting:
    a. Use only a commercially approved cleaner. Caustic solutions will damage certain parts of the turbocharger and should NOT be used.
    b. Soak parts in cleaner until all deposits have been loosened.
    c. Use a plastic scraper or bristle-type brush on aluminium parts. Vapour blast may also be used provided that the shaft and other bearing surfaces are protected.
    d. Clean all drilled passages with compressed air jet.
    e. Ensure that surfaces adjacent to wheels on stationary housings are free of deposits and are clean and smooth.
14. Examine shaft and turbine wheel assembly for excessive wear or scratches on bearing journals, excessive scoring of piston ring groove walls and cracked, bent or damaged blades. **Do not attempt to straighten blades.** Renew shaft and wheel assembly as necessary.
15. Examine thrust washers for excessive wear or damage, and renew if necessary. Check oil feed grooves are clean.
16. Examine compressor wheel for cracked, bent or damaged blades, and renew if necessary. **Do not attempt to straighten blades.**
17. Examine bearings for wear or damage; renew as necessary.
18. Examine bearing housing for excessive wear or scratches; renew as necessary.
19. Examine turbine housing for damage due to contact with rotor, cracks, flaking or signs of overheating; renew as necessary.
20. Examine compressor cover for damage due to contact with rotor; renew as necessary.
21. **Rotor balance:** The complete rotor assembly, consisting of the shaft and turbine wheel, compressor wheel, flinger sleeve, thrust collar and thrust ring is finely balanced as a complete assembly using an electrodynamic balancing machine. If any of the rotor assembly components require replacement,

https://tractormanualz.com/

one of the following procedures must be carried out:

a. If no balancing facilities exist the complete rotor assembly must be replaced with a new factory balanced assembly.

b. If suitable equipment is available the rotor balance may be checked and corrected by following detailed instructions and using a master rotor of known imbalance which may be obtained from:

Holset Engineering Company
Limited
P.O. Box A9
Turnbridge
Huddersfield HD1 6RD
England

The Lucas/C.A.V./Simms Service Organisation also services Holset turbochargers and have facilities to balance the rotor assembly. Details of your nearest agent may be obtained from:

C.A.V. and Simms Service
C.A.V. Limited
P.O. Box 36
Warple Way
London W37 SS
England

Reassembly

NOTE: On assembly ensure to align balance marks on compressor wheel, thrust parts, flinger sleeve and turbine shaft.

22. Fit inner snap-ring into turbine end of bearing housing with bevelled face towards bearing.
23. Position turbine end bearing in bearing housing and fit outer snap-ring with bevelled face toward bearing.
24. Fit inner snap-ring with bevelled face towards bearing, into compressor end of housing. Position bearing in housing against snap-ring.
25. Fit piston ring to shaft. Lubricate bearings, piston ring and housing bore with clean engine oil, see TB10, then slide shaft into housing.
26. Clamping the shaft upright and holding turbine wheel in vice position spacer plate, thrust collar and thrust bearing against bearing housing; lubricate thrust parts with clean engine oil, see TB10.
27. Fit countersunk screws and lock washers, tightening screws to torque in DATA using tools 2801 and TX 20.
28. Fit thrust ring and oil deflector.
29. Fit piston ring to flinger sleeve and position flinger sleeve in compressor back-plate.
30. Position new O-ring on back-plate, then fit back-plate into bearing housing.
31. Fit compressor locknut and tighten to torque in DATA.
    NOTE: Compressor locknut has a left-hand thread. Take care not to bend the shaft. It is recommended that a T-handle or screwdriver-type torque wrench is used.
32. Position dial test indicator on end of shaft and check end-float with figures quoted in DATA.
33. Position dial test indicator on compressor wheel boss and check that the radial clearance is within limits quoted in DATA.
34. Align marks on bearing housing and turbine housing, then slide core assembly into turbine housing; secure with setscrews and washers, tightening setscrews to torque in DATA. Check that turbine wheel rotates freely in housing.
35. Align marks on bearing housing and compressor cover. Fit setscrews and washers, tightening setscrews to torque in DATA. Check that compressor wheel rotates freely in housing.

DATA

Turbocharger

Rotor assembly maximum out of balance	1,5 gf mm (0.002 ozf in)
Shaft end-float	0,10 to 0,15 mm (0.004 to 0.006 in)
Shaft radial clearance	0,28 to 0,43 mm (0.011 to 0.017 in)

Torque tightening figures

	Nm	kgf m	lbf ft
Thrust bearing screws	2,25	0,22	1.8 (20 lbf in)
Compressor cover bolts	5,7	0,6	4.2
Compressor wheel locknut	6,8	0,69	5
Turbine housing bolts	11,3	1,2	8.3

https://tractormanualz.com/

LIST OF OPERATIONS

Clutch assembly
- overhaul TB33.10.08
- remove and refit TB33.10.01

Clutch slave cylinder
- overhaul TB33.35.07
- remove and refit TB33.35.01

Master cylinder
- overhaul TB33.20.07
- remove and refit TB33.20.01
- reservoir – remove and refit TB33.20.08

Mechanical linkage and release
- P.T.O. clutch – hand lever shaft bushes – remove and refit TB33.25.19
- release bearing – P.T.O. clutch – remove and refit TB33.25.14
- release bearing – main clutch – remove and refit TB33.25.13
- release bearing assemblies – main and P.T.O. clutch – remove and refit TB33.25.15
- withdrawal lever shaft bushes, main and P.T.O. – remove and refit TB33.25.05

Pedal assemblies
- clutch pedal bushes – remove and refit TB33.30.04

https://tractormanualz.com/

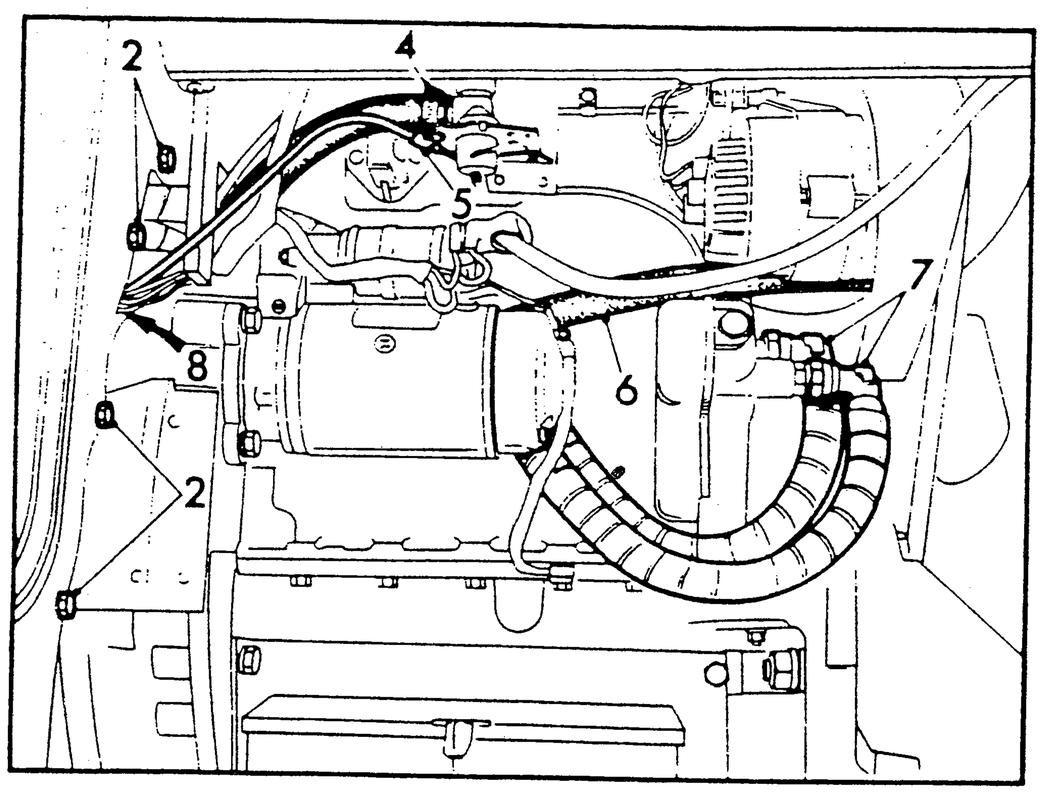

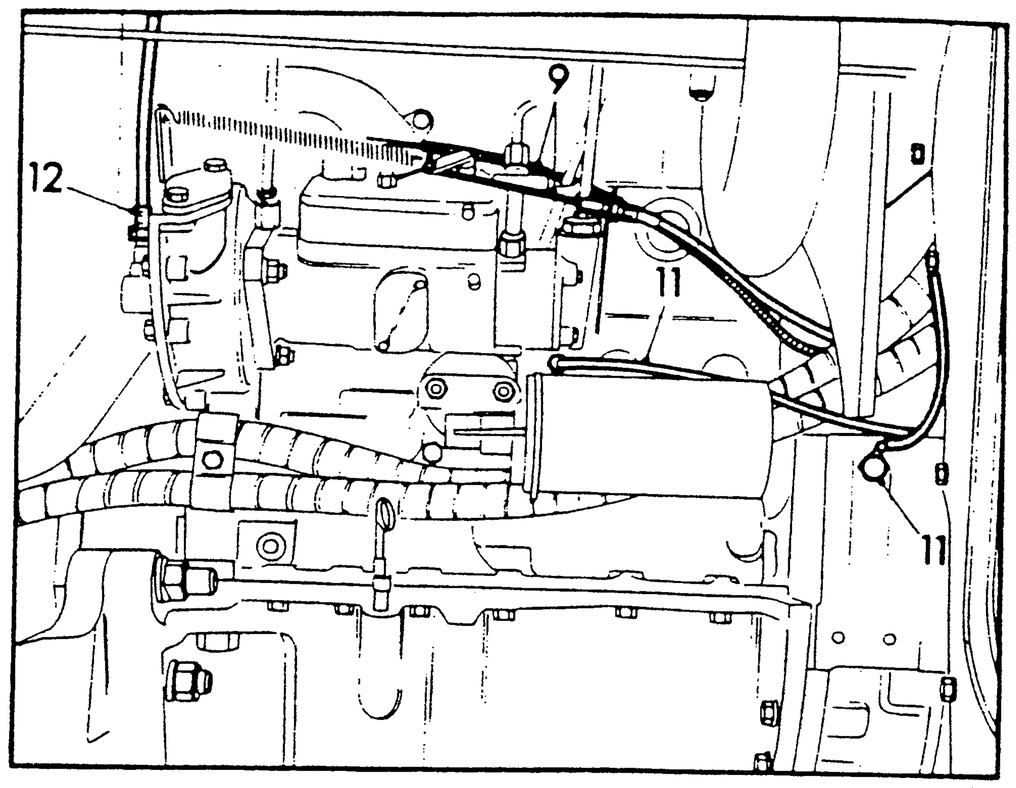

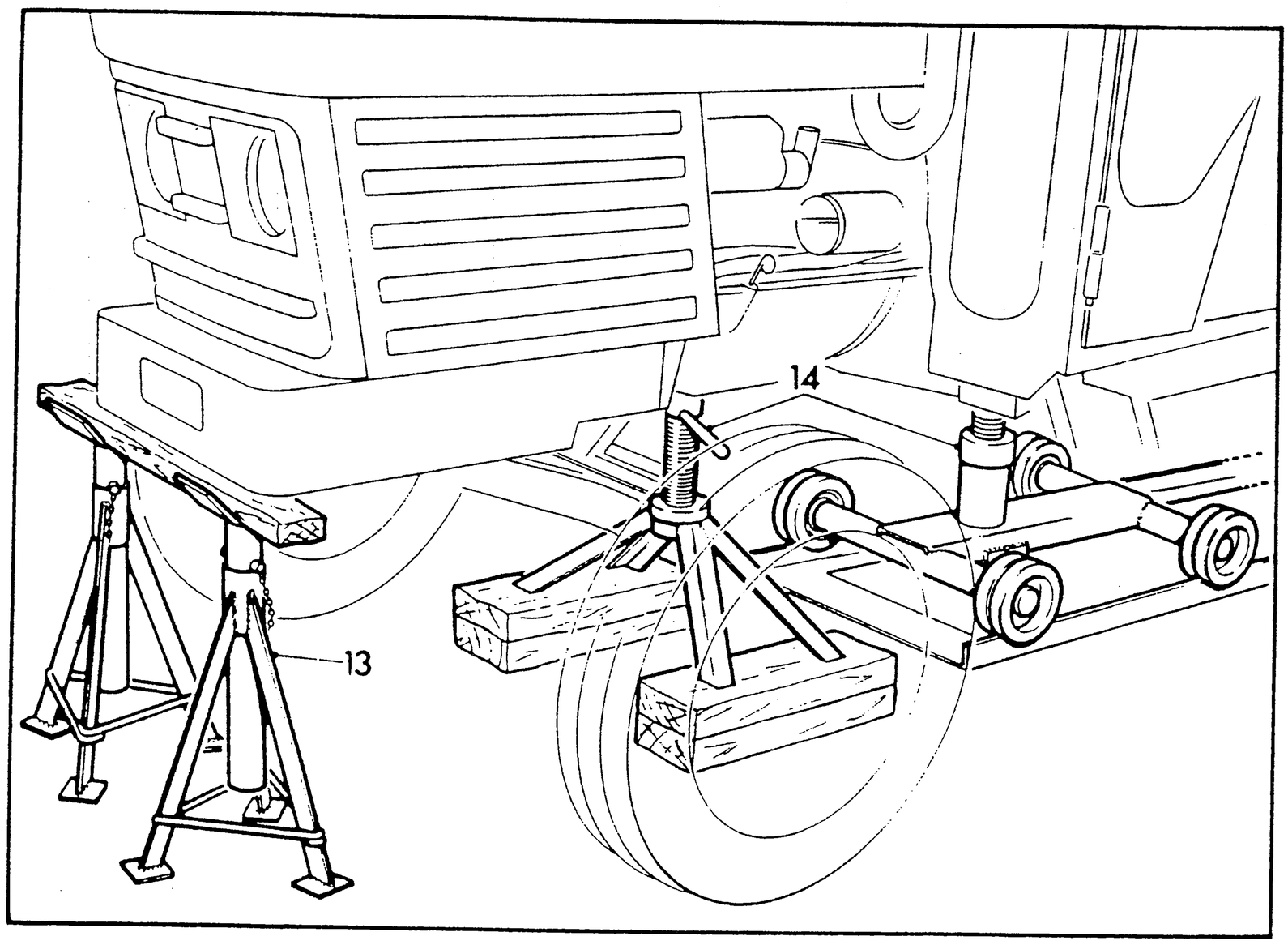

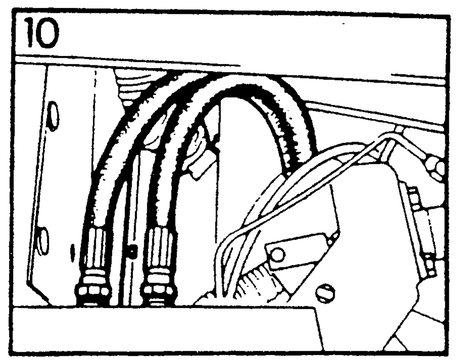

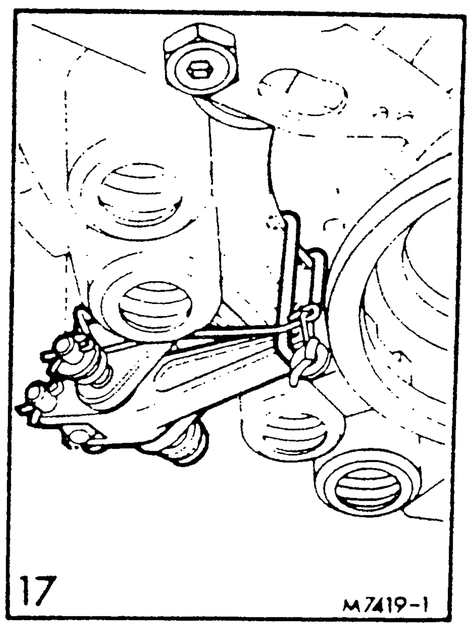

CLUTCH—245

—Remove and refit **TB33.10.01**

Service tools: 18G 498, 2720

Removing

1. Remove engine front right-hand side panel and disconnect earth lead from battery negative (—) terminal.
2. Remove bolts and withdraw baffle board.
3. Drain cooling system. TB10.
4. Disconnect heater hose from valve.
5. Disconnect heater control cable.
6. Disconnect heater hose at water pump.
7. Disconnect power steering pump pipes.
8. Unplug engine harness wires between baffle board and bulkhead.
** 9. Disconnect stop control and throttle control cables at injection pump.**
10. Remove console right-hand side panel and disconnect power steering ram pipes in cab, marking for reassembly.
11. Disconnect oil pressure gauge pipe from engine and earth wire from flywheel housing.
12. Disconnect tractometer drive cable from front cover drive unit.
13. Position axle stands under front frame assembly.

continued

https://tractormanualz.com/

14. Position tractor splitting kit, tool 2720, under gearbox and sump to take the weight.
    NOTE: Care must be taken not to exceed the screw jack limit.
15. Remove flywheel housing nuts and setscrews.
16. Separate and roll rear end of tractor away from front engine unit assembly.
17. Fit clutch retaining staples 18G 498 to main clutch levers and mark position of clutch on flywheel.
18. Remove the nine bolts securing clutch to flywheel and withdraw clutch.

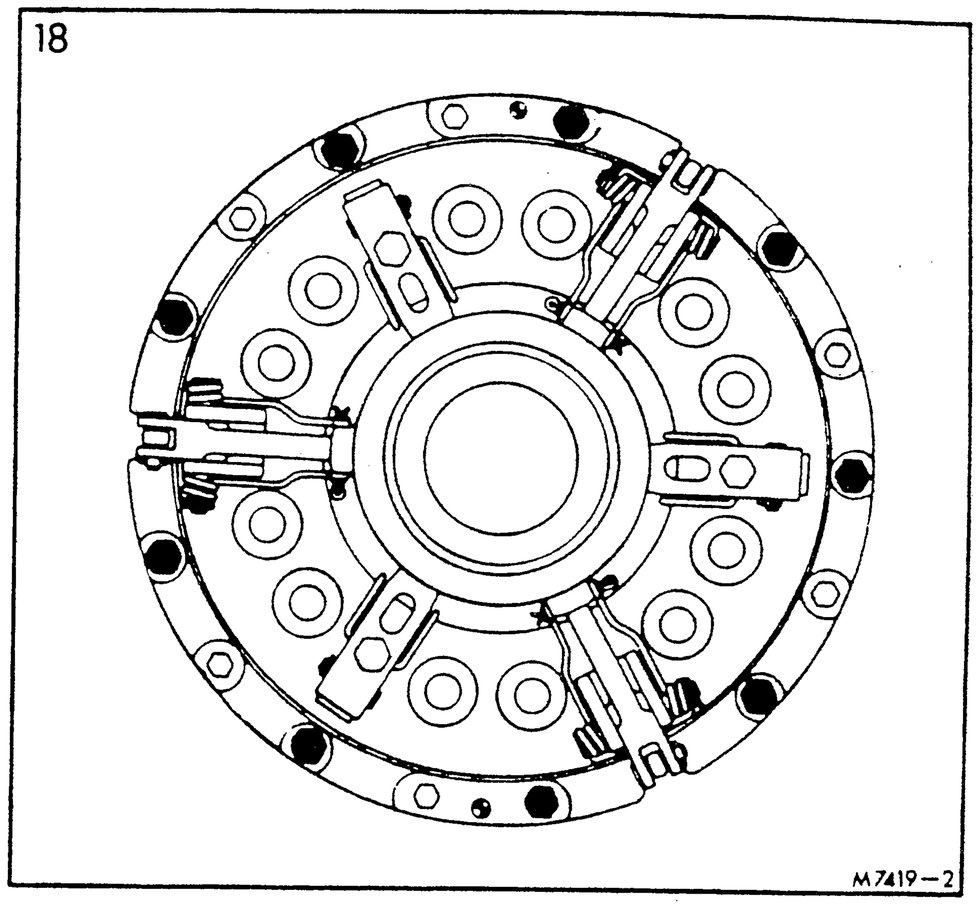

Refitting

19. Fit clutch assembly, centralise main clutch driven plate to flywheel and tighten bolts.
20. Remove retaining staples from main clutch levers.
21. Using tractor splitting kit, roll rear end of tractor to engine unit, align and enter I.P.T.O. and main clutch shafts in clutch.
22. Refit flywheel housing setscrews, nuts, washers and tighten evenly.
23. Remove tractor splitting kit and support stands.
24. Connect tractometer drive cable.
25. Connect earth wire to flywheel housing and oil pressure gauge pipe to engine.
26. Connect throttle and stop control cables.
27. Connect power steering ram pipes in cab and refit console side panels.
28. Connect engine harness wires.
29. Connect power steering pump pipes.
30. Connect heater hose at water pump.
31. Connect heater control cable at valve.
32. Connect heater hose at valve.
33. Refill cooling system. TB10.
34. Refit baffle board, connect battery and fit side panel.
35. Remove filler/level plug from the power steering pump reservoir and top up as necessary to the bottom of the filler/level plug hole.
    NOTE: When replenishing the reservoir ensure that the wheels are in the 'full right lock' position and the engine is running. Operate steering from lock to lock to expel air from the system, top up and repeat procedure as necessary; refit filler level plug.

DATA

Torque tightening figures	**Nm**	**kgf m**	**lbf ft**
Flywheel housing nuts and setscrews	37	3.7	27

https://tractormanualz.com/

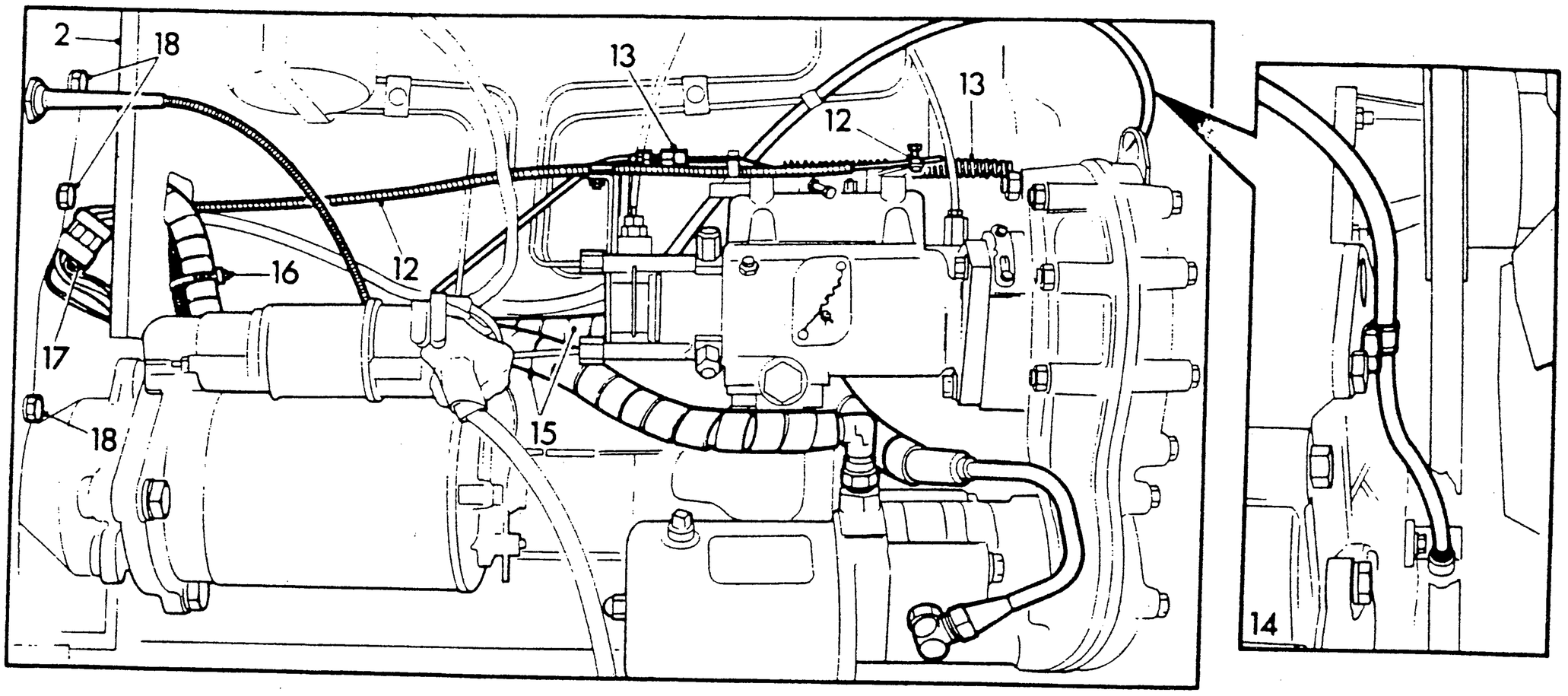

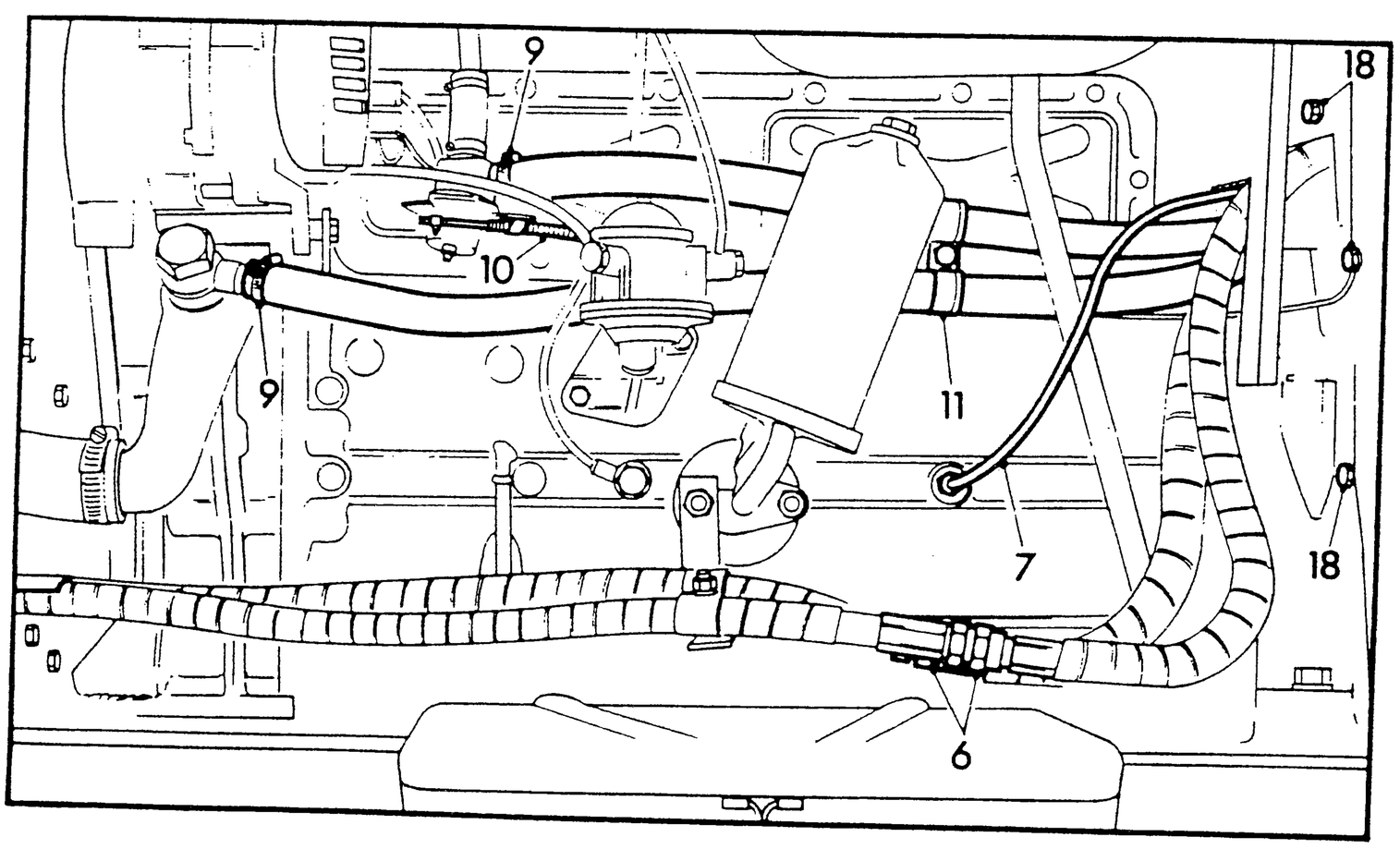

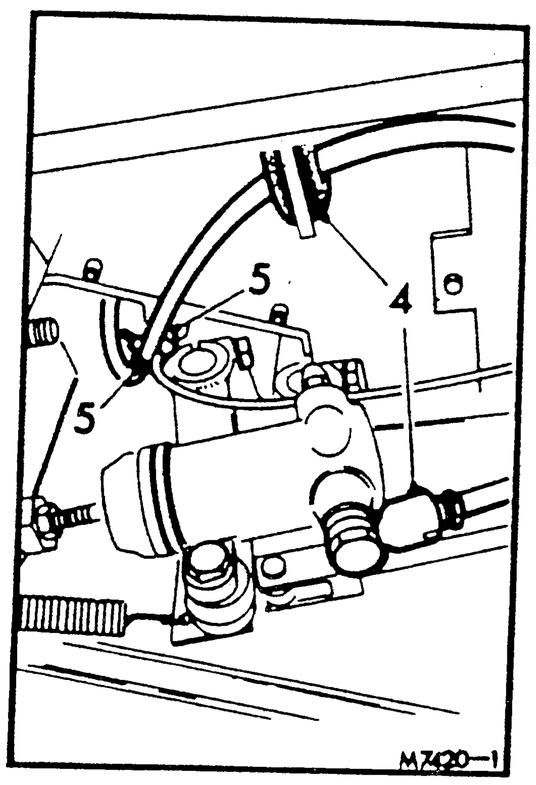

CLUTCH — ALL MODELS EXCEPT 245

—Remove and refit TB33.10.01

Service tool: 18G 498

Removing

NOTE: If cab is removed, start at operation 26.

1. Disconnect earth lead from battery negative (—) terminal and lift bonnet.
2. Remove nuts and bolts and withdraw baffle board.
3. Lift off doors. Remove split pin, washer and clevis pin from check straps.
4. Position drip tray. Disconnect clutch pipe from slave cylinder and withdraw grommet and pipe from bracket.
5. Cut off plastic ties securing cable harness and clutch pipe to brake pipe and disconnect brake pipes at unions under floor of cab.
6. Disconnect steering hoses at left-hand side of engine, marking them for reassembly.
7. Disconnect oil pressure gauge pipe from engine.
8. Drain cooling system. TB10.
9. Disconnect heater hoses.
10. Disconnect heater control cable, clamp and clip from control valve.

11. Remove clip (noting spacers and clip, turbocharged models) securing heater hoses to block. Manoeuvre hoses and control cable away from engine.

12. Disconnect stop control cable from injection pump and release from clip.

13. Disconnect throttle control cable and outer cable anchor, release return spring and draw clear.

continued

https://tractormanualz.com/

14. Remove tractometer drive cable from angle drive unit, remove clip on timing cover and cut off plastic tie (all models except turbocharged).

15. Disconnect steering hoses at unions on right-hand side of engine.
16. Remove plastic tie securing wiring harness to steering hose.
17. Disconnect wiring harnesses under bulkhead.
18. Remove setscrews securing console to bulkhead, noting that the setscrew near the starter motor cannot be released fully at this stage.
19. Lift floor mats and remove setscrews securing console to cab floor.
20. Remove both instrument housing side panels.
21. Remove knobs, locknuts and rubber gaiter from gear-change levers.
22. Remove gearbox insulation mat.
23. Slide console back, and release remaining setscrews securing console to cab.
24. Remove cab seat by unscrewing setscrews, securing slides to cab floor.
25. Manoeuvre console to rear of cab.
26. Remove the clutch housing cover.
27. Remove the five bolts securing the clutch withdrawal carrier to the carrier bracket assembly.
28. Remove the four bolts retaining the two halves of the carrier bracket assembly together.
29. Remove the transfer gear housing cover bolts adjacent to the lower half of the carrier bracket assembly.
30. Remove the bolts retaining the carrier bracket assembly halves to the transfer gear housing, and withdraw the top half of the carrier bracket assembly. The bottom half cannot be removed.
31. Knock back locking washers and remove the four bolts securing the power take-off driving flange to the driven flange.

    NOTE: Position the hole in the flange of the clutch withdrawal carrier over each bolt in turn as they are removed.
32. Move the driving flange slightly forwards.
33. Remove the power take-off driving dog, which is numbered for correct assembly. Note that the numbers face towards the engine.
34. Remove the retaining rings and withdraw the retaining pins which couple the main transmission and primary shafts together.
35. Move the driving sleeve forwards.
36. Unscrew the driving sleeve plugs from the main transmission and primary shafts.

continued

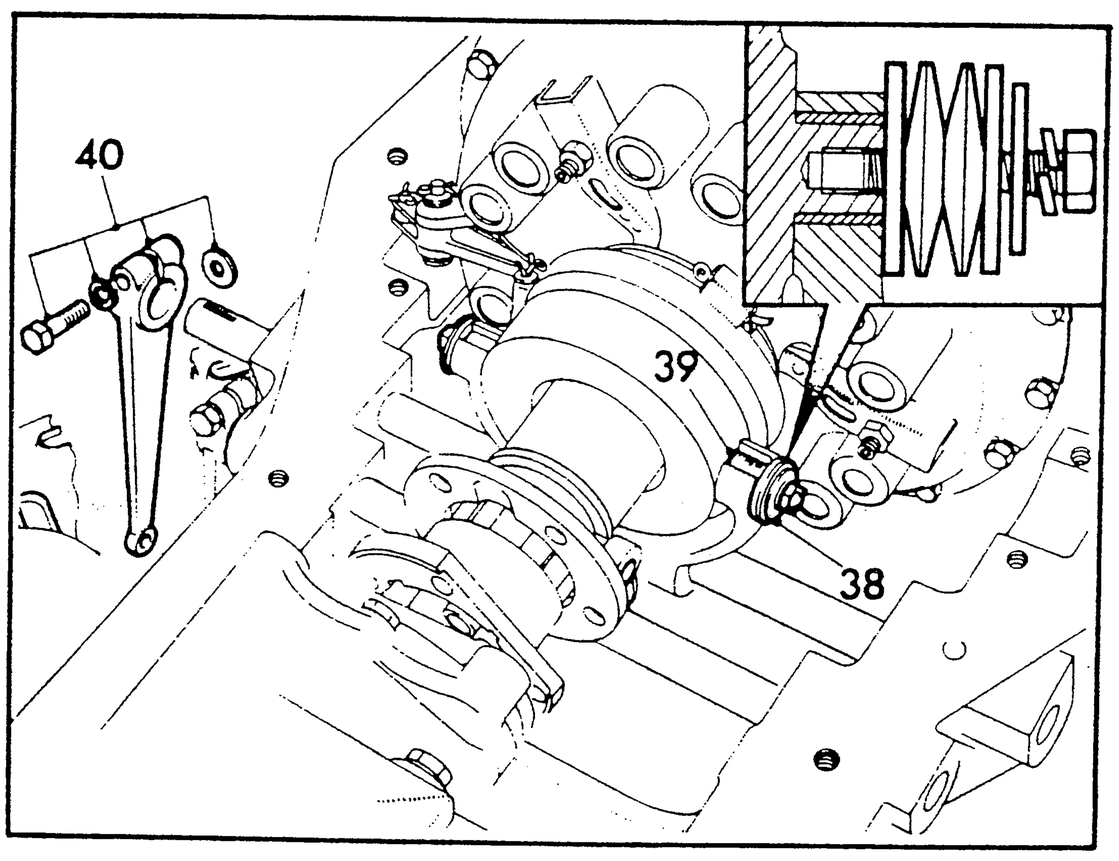

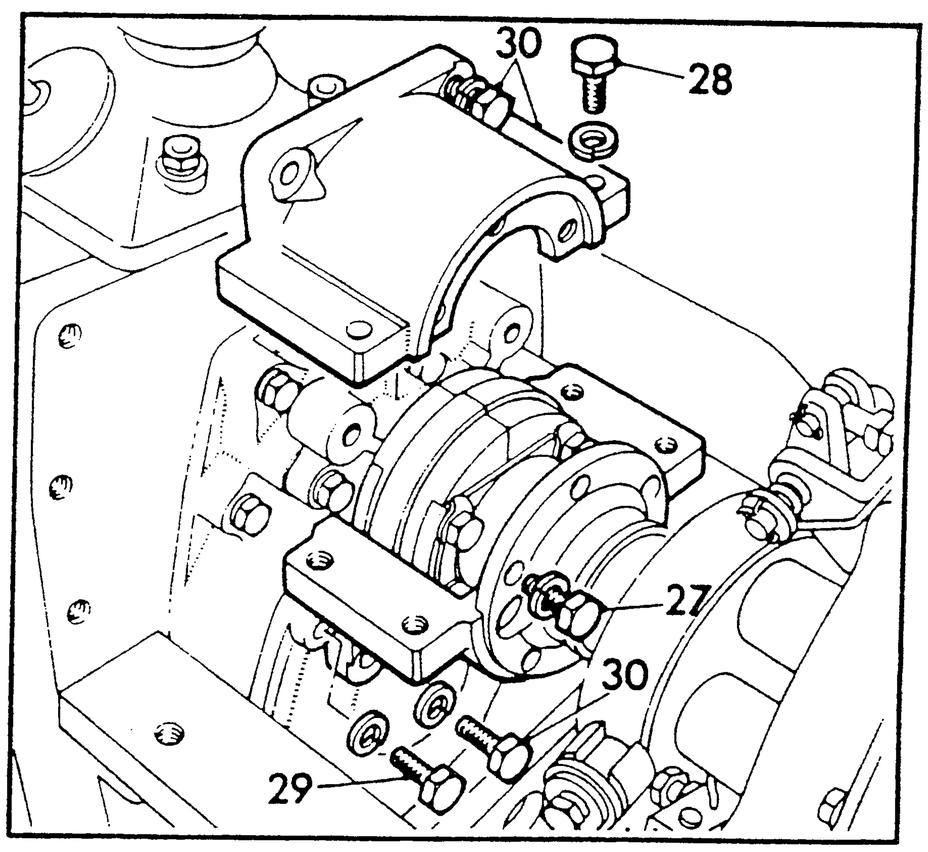

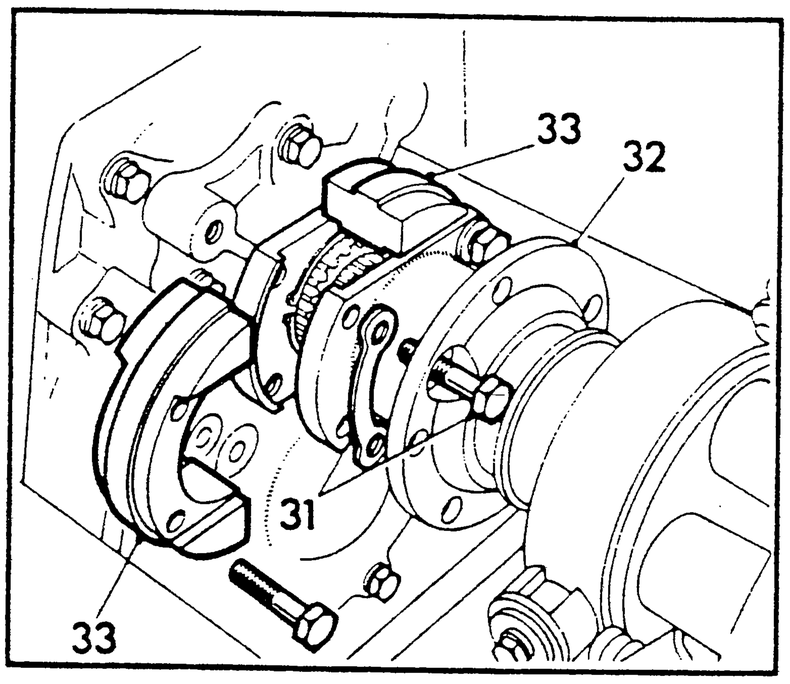

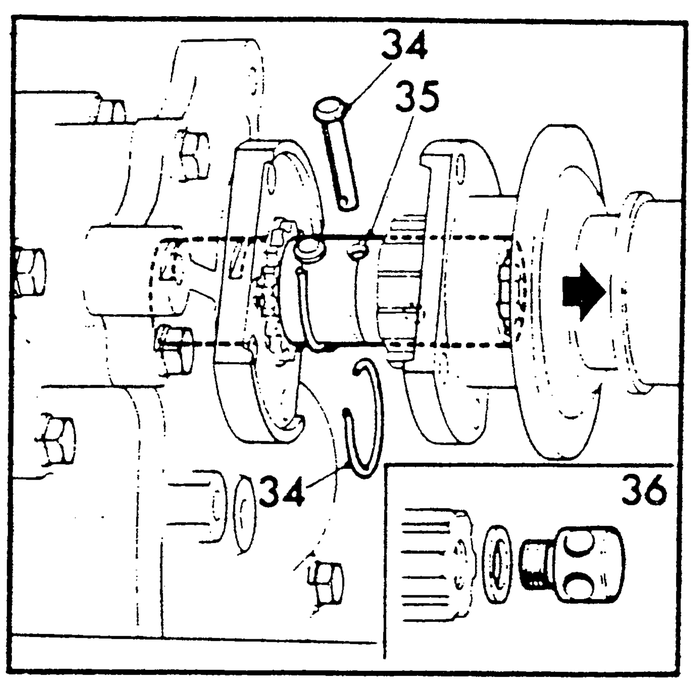

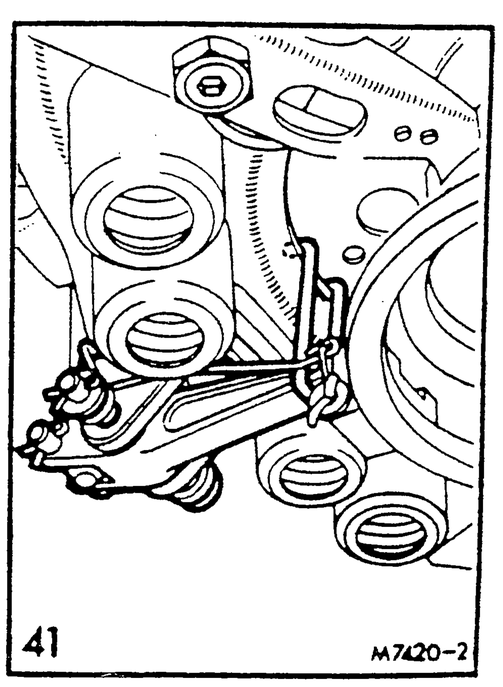

https://tractormanualz.com/

37. Mark the relative positions of the clutch and the flywheel.
38. Remove setscrews and washer packs from main clutch release bearing fork.
39. Remove bushes from clutch release bearing fork.
40. Remove pinch-bolt and key, and withdraw lever from main clutch cross-shaft.
41. Place retaining staples (tool 18G 498) over the three main clutch release levers and hook the end of each staple beneath the independent clutch cover in order to retain the levers depressed.
42. Remove six setscrews retaining the clutch to the flywheel that are accessible.
43. Turn engine to gain access to remaining three setscrews and attach a suitable lifting eye to clutch.
44. Position and attach crane to lifting eye and take the weight of the clutch.
45. Remove the three remaining setscrews retaining the clutch to the flywheel.
46. Withdraw the transmission shaft fully rearwards to clear the spigot bearing in the crankshaft.
47. Withdraw the clutch assembly complete with drive shaft assembly.

NOTE: Instructions 48 and 49 should only be carried out when dismantling the clutch or withdrawal assembly. To prevent damage to the anti-rotation pin, the thrust bearing must be supported throughout the operation of removing the sleeve from the bearing.

48. Remove the driving sleeve, flange and main transmission shaft.
49. Remove circlip from I.P.T.O. transmission sleeve and withdraw sleeve.

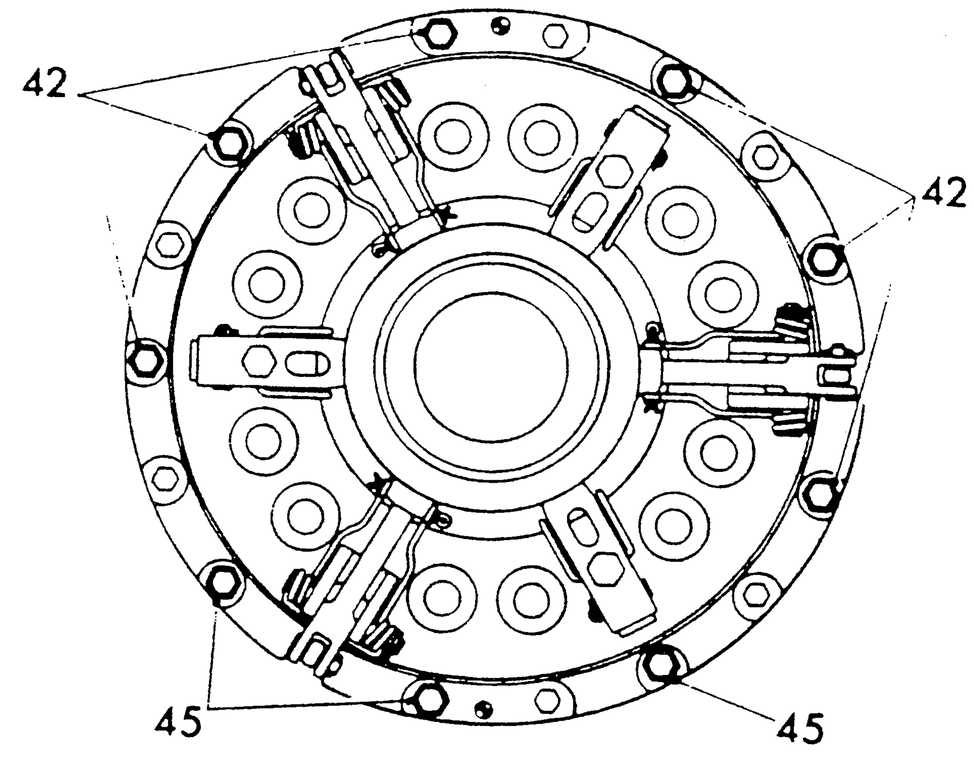

Refitting

50. Refit I.P.T.O. transmission sleeve assembly to clutch assembly and refit circlip.
51. Refit the main transmission shaft, flange and driving sleeve.
52. Attach crane to lifting eye and take the weight of the clutch.
53. Lift and reposition the clutch assembly complete with transmission shaft.
54. Push transmission shaft forward to engage spigot bearing in the crankshaft. Check the relative positions of clutch and flywheel.
55. Loosely refit the six setscrews which are accessible, retaining the clutch to the flywheel.
56. Remove crane, turn engine and fit remaining three setscrews.
57. Tighten all nine setscrews evenly.
58. Remove clutch retaining staples (tool 18G 498).
59. Refit key, lever and pinch-bolt to main clutch cross-shaft.
60. Refit bushes to clutch release bearing fork.

continued

https://tractormanualz.com/

61. Refit washer packs and setscrews to main clutch release bearing fork.
62. Move the driving sleeve backwards.
63. Refit the pins and retaining rings to couple the main transmission shaft and primary shafts together.
64. Refit the power take-off driving dog, making sure numbered faces are towards engine.
65. Move the driving flange slightly backwards.
66. Refit the power take-off driving flange to the driven flange, replace locking washers, bolts and secure.
67. Refit the top half of the carrier bracket assembly and refit the bolts securing the carrier bracket assembly halves to the transfer gear housing.
68. Refit the transfer gear housing cover bolts adjacent to the lower half of the carrier bracket assembly.
69. Refit the four bolts securing the two halves of the carrier bracket assembly together.
70. Refit the five bolts securing the clutch withdrawal carrier to the carrier bracket assembly.
71. Refit and seal the clutch housing cover.
72. Manoeuvre console into position and replace sealing rubber, bringing wires, pipes and cables back into engine compartment.
73. First enter setscrew behind starter motor. Then fit remaining 12 setscrews securing console to cab bulkhead and refit earth wire from cab to flywheel housing.
74. Refit seat by securing slides to cab floor.
75. Refit gearbox insulation mat.
76. Refit rubber gaiter, locknuts and knobs to gear-change levers.
77. Refit both instrument housing side panels.
78. Fit setscrews to secure console to cab floor and replace floor mats.
79. Connect wiring harness under bulkhead.
80. Reconnect steering hoses at unions on right-hand side of engine, securing hose to wiring harness with plastic tie.
**81. Refit tractometer drive cable to angle drive unit, fit clip on timing cover and secure to pipe with plastic tie (all models except turbocharged).
82. Reconnect throttle control cable, secure outer cable anchor and refit return spring.**
83. Reconnect stop control cable to injection pump and secure in clip.
84. Manoeuvre heater hoses and control cable behind engine breather tube (all models except turbocharged). Refit clips to hoses and secure to block (noting spacers and clip, turbocharged models.)
85. Refit heater control cable to control valve, reclamp and reclip.
86. Reconnect heater hoses.
87. Reconnect oil pressure gauge pipe to engine.
88. Reconnect steering hoses on left-hand side of engine.
89. Refit baffle board.
90. Reconnect clutch pipe to slave cylinder and replace pipe and grommet in bracket.
91. Replace plastic ties securing cable harness and clutch pipe to brake pipes and reconnect brake pipes at unions under floor of cab.
92. Top-up and bleed brake and clutch system. TB10.
93. Lift on doors; refit clevis pin, washer and split pin to check straps.
94. Fill cooling system. TB10.
95. Reconnect battery, fasten side panels and close bonnet.
96. Remove filler/level plug from the power steering pump reservoir and top up as necessary to the bottom of the filler/level plug hole.
NOTE: When replenishing the reservoir ensure that the wheels are in the 'full right lock' position and the engine is running. Operate steering from lock to lock to expel air from the system, top up and repeat procedure as necessary; refit filler level plug.

https://tractormanualz.com/

CLUTCH ASSEMBLY

—Overhaul TB33.10.08

Service tools: 18G 498, 18G 563 A, 18G 563 E

Dismantling

1. Remove clutch assembly. TB33.10.01.
2. Remove main clutch driven plate.
3. Mark position of main clutch cover to main clutch pressure plate and I.P.T.O. pressure plate to I.P.T.O. clutch cover for reassembly.
4. Using flywheel from engine as a base plate, assemble the clutch gauging fixture tool 18G 563 E as follows:
   a. Fit bridge plate to flywheel using countersunk screws, noting that the boss faces downwards, and fit four spacers (code No. 3) at equal distances around the pressure face of the flywheel.
   b. Fit clutch without main driven plate to flywheel using nine long bolts (18G 563/6).
   c. Fit long spacer adaptor, joggling platform and lever assembly.
5. Compress main levers to remove retaining staples (18G 498), then remove the joggling lever and platform.
6. Release split pins and clevis pins retaining turnbuckles to main clutch release levers.
7. Release split pins and clevis pins retaining I.P.T.O. release levers to I.P.T.O. pressure plate.
8. Of the six bolts securing the I.P.T.O. clutch cover to the main clutch cover, remove every alternate bolt (three) and substitute three 32 mm (1.25 in) long, $\frac{5}{16}$ in U.N.F. setscrews and plain washers, screwed in to the full depths of the holes.
9. Unscrew the nine long bolts (18G 563/6) half a turn at a time until the main clutch is free of spring pressure.
10. Unscrew the three standard I.P.T.O. clutch cover bolts half a turn at a time until the I.P.T.O. clutch cover contacts the three bolts inserted in operation 8.
11. Remove the remaining three long setscrews half a turn at a time until both clutches are free of spring pressure.
12. Remove the I.P.T.O. clutch cover, springs, cups, pressure plate and driven plate.
13. Remove main clutch cover, springs, insulating washers and pressure plate.
14. Remove pins to release turnbuckles from main pressure plate.
15. Remove circlip from inner cover and withdraw pilot bearing.
16. Remove split pins securing levers to I.P.T.O. release plate and remove release plate.
17. Remove levers from I.P.T.O. clutch cover.
18. Remove retaining springs and and adjusting screws from I.P.T.O. levers.

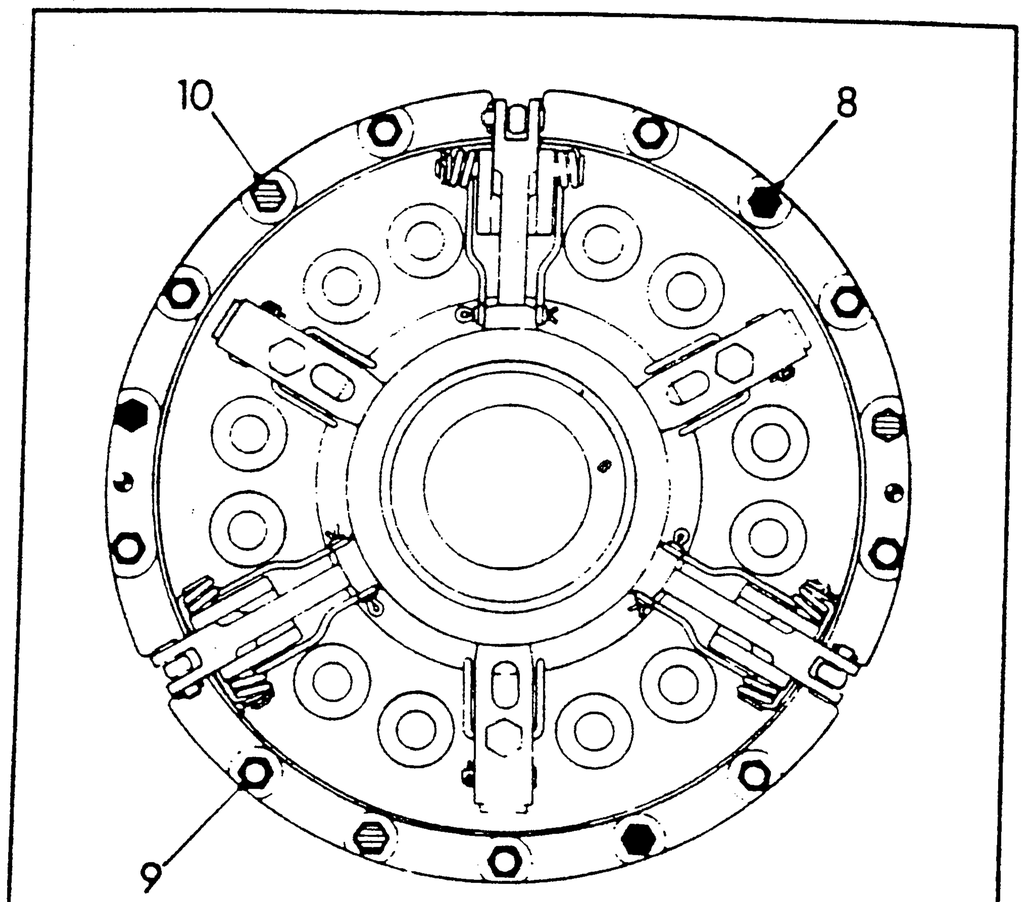

M7421—1

continued

https://tractormanualz.com/

CLUTCH MASTER CYLINDER – ALL MODELS

–Remove and refit **TB33.20.01**

Removing

1. Disconnect earth lead from battery negative (–) terminal.
2. Remove console left-hand side cover.
3. Disconnect pipes from master cylinder and drain fluid.
4. Remove split pin, clevis pin, washers and return spring from jaw end.
5. Remove master cylinder from bracket.

Refitting

6. Position master cylinder and enter both pipes.
7. Secure master cylinder to bracket and tighten both pipes.
8. Fit clevis pin, washers and return spring to jaw end.
9. Adjust the clutch pedal stop to give maximum height to pedal, without creating a foul condition between the clutch pedal and the inner end of the yoke end.
10. Adjust the master cylinder push-rod to give the clutch pedal free play of 6 to 12 mm (0.25 to 0.5 in).
11. Fit console side panel.
12. Connect battery.
13. Top up and bleed clutch. TB10.

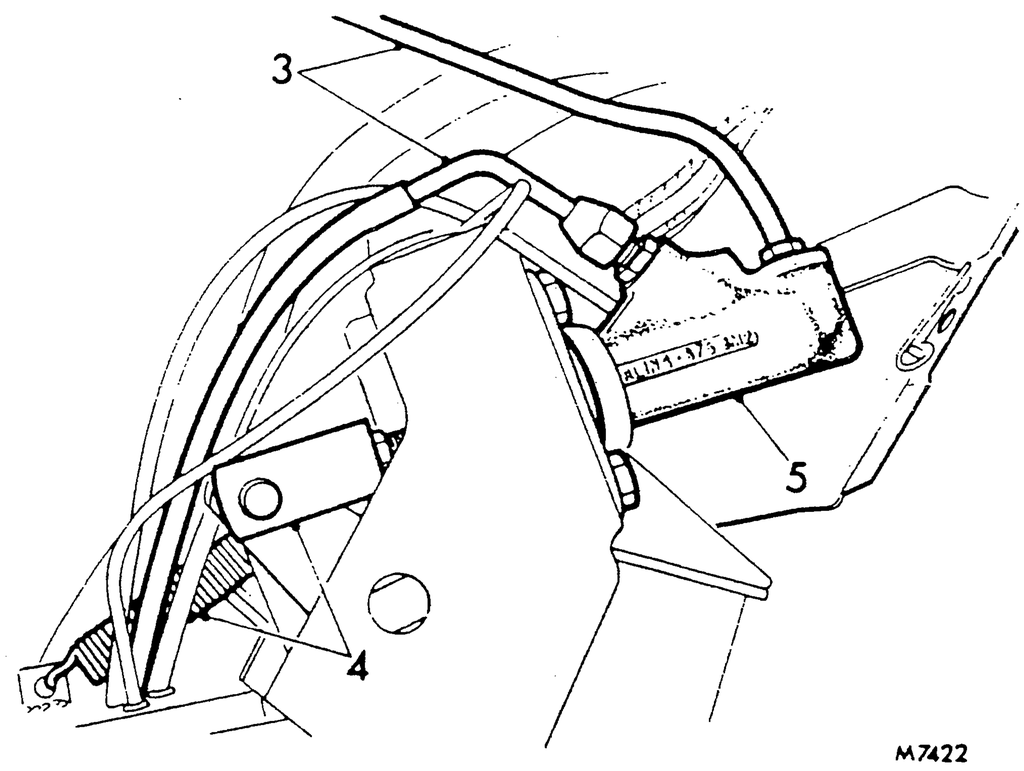

M7422

MASTER CYLINDER – ALL MODELS

–Overhaul **TB33.20.07**

Dismantling

1. Remove master cylinder. TB33.20.01.
2. Remove jaw end.
3. Remove dust cover.
4. Remove circlip.
5. Remove push-rod and dished washer assembly.
6. Withdraw complete piston assembly.
7. Lift thimble leaf and remove piston from thimble.
8. Remove piston seal from piston.
9. Compress spring and remove valve stem through elongated hole in thimble.
10. Withdraw thimble from spring.
11. Remove valve spacer and spring washer from valve stem.
12. Remove valve seal from valve head.

Inspection

13. Clean all components in Girling Cleaning Fluid.
14. Check master cylinder piston bore and piston for corrosion, scores or ridges. Renew the unit as necessary.
15. Check inlet and outlet ports are free from obstruction.

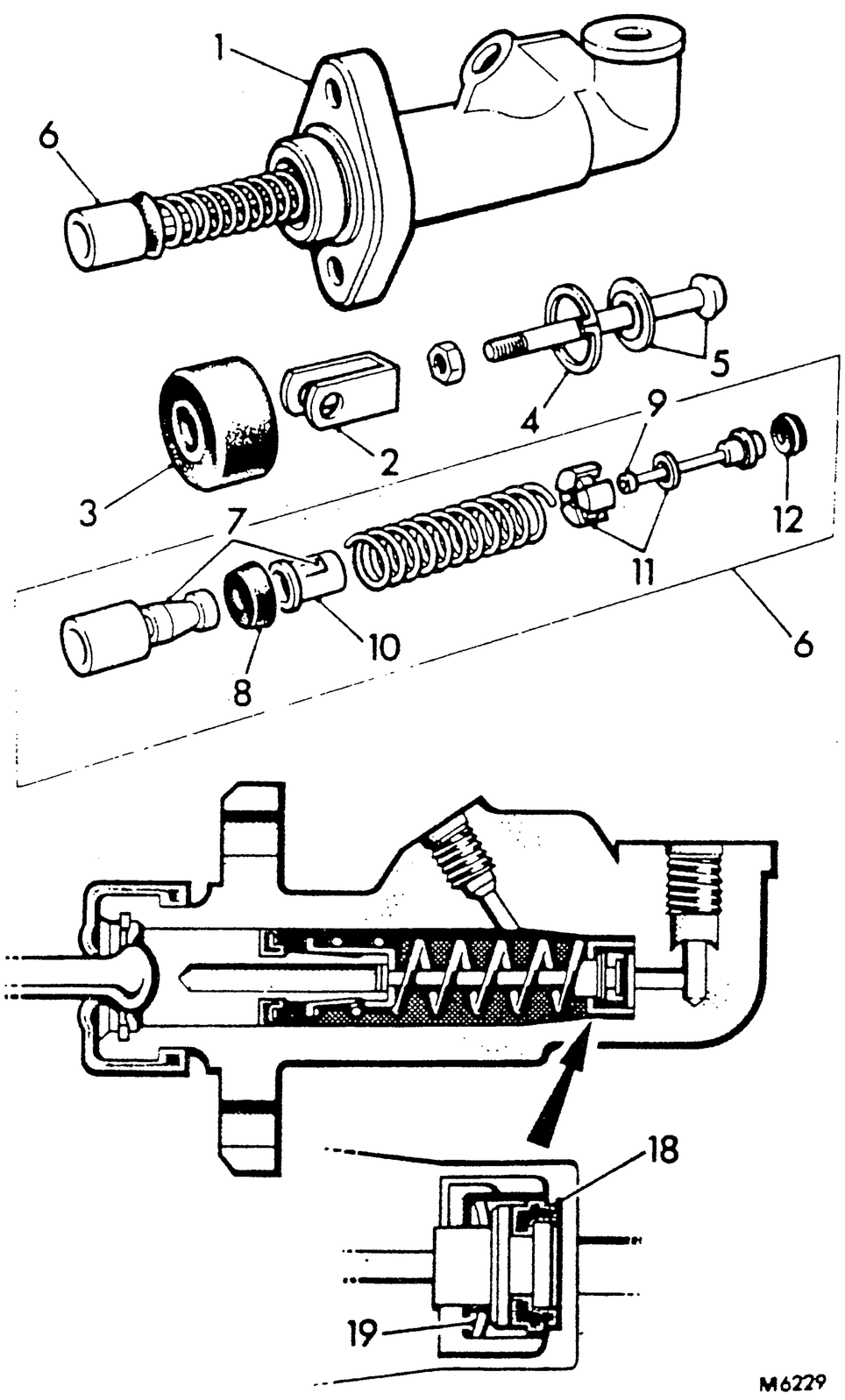

M6229

continued

Reassembling

16. Lubricate piston bore and all internal components with clean, new brake fluid.
17. Renew all seals.
18. Fit valve seal with its smallest diameter seated on the valve head.
19. Fit spring washer with domed side of washer to shoulder of valve stem.
20. Fit valve spacer with the legs of spacer toward spring washer.
21. Seat spring centrally on valve spacer and insert thimble in spring.
22. Push end of thimble and compress spring against valve spacer and insert valve stem through elongated hole of thimble; locate valve stem in centre of thimble.
23. Fit piston seal to piston with flat surface of seal against piston.
24. Insert small end of piston into thimble, compress spring and depress thimble leaf to engage under shoulder of piston.
25. Insert piston assembly into piston bore.
26. Position push-rod with dished washer assembly and fit circlip. Smear push-rod and cylinder bores and dust cover with Girling Rubber Grease and fit dust cover.
27. Fit jaw end.
28. Fit master cylinder. TB33.20.01.

CLUTCH SYSTEM– RESERVOIR – ALL MODELS

–Remove and refit **TB33.20.08**

Removing

1. Disconnect earth lead from battery negative (–) terminal.
2. Remove left-hand side panel and reservoir aperture cover from console.
3. Remove clamp and reservoir complete from bracket.
4. Remove pipe from master cylinder.
5. Withdraw reservoir from console complete with pipe and clamp.
6. Remove clamp from reservoir.
7. Remove rubber pipe from reservoir.

Refitting

8. Connect rubber pipe to reservoir.
9. Position reservoir in clamp and secure.
10. Refit clamp and reservoir to bracket and reconnect pipe to master cylinder.
11. Refit left-hand console side panel.
12. Top-up and bleed clutch. TB10.
13. Replace reservoir aperture cover in console.
14. Connect battery.

https://tractormanualz.com/

LIST OF OPERATIONS

Couplings and drive flanges
– driving sleeve, mainshaft – remove and refit TB37.10.02

Gear change controls and selectors
– gearbox top cover – selector assembly – overhaul TB37.16.40
– gearbox top cover – selector assembly – remove and refit TB37.16.37

Gearbox assembly – overhaul TB37.20.04

Oil seals
– P.T.O. driving gear – remove and refit TB37.23.07
– P.T.O. output shaft – remove and refit TB37.23.08
– P.T.O. selector shaft – remove and refit TB37.23.09
– transfer cover – remove and refit TB37.23.10

P.T.O. and control rods
– clutch hand lever assembly – overhaul TB37.29.08
– clutch hand lever assembly – remove and refit TB37.29.07
– P.T.O. primary shaft – remove and refit TB37.29.06
– P.T.O. selector shaft bush – remove and refit TB37.29.12
– output shaft assembly – overhaul TB37.29.03
– transfer gear assembly – remove and refit TB37.29.04

https://tractormanualz.com/

DRIVING SLEEVE – MAINSHAFT – 245

–Remove and refit TB37.10.02

Removing

1. Remove cab. TB76.10.01.
2. Carry out all operations of clutch removal to separate the two halves of the tractor but do not remove clutch from flywheel. TB33.10.01.
3. Remove clutch withdrawal assembly and withdrawal lever shafts, see TB33.25.15, but do not dismantle the release bearing assembly.
4. Withdraw P.T.O. drive shaft.
5. Remove the four bolts and withdraw carrier bracket assembly.
6. Engage P.T.O. using hand lever and hold P.T.O shaft at rear of tractor.
7. Unlock and remove the four bolts securing P.T.O. driving flange to the driven flange and remove driving flange and the two halves of the driving dog.
   NOTE: The front faces of the flange and dog are numbered for correct reassembly.
8. Remove retaining rings and pins and withdraw drive shaft and sleeve.
9. Inspect parts and renew as required.

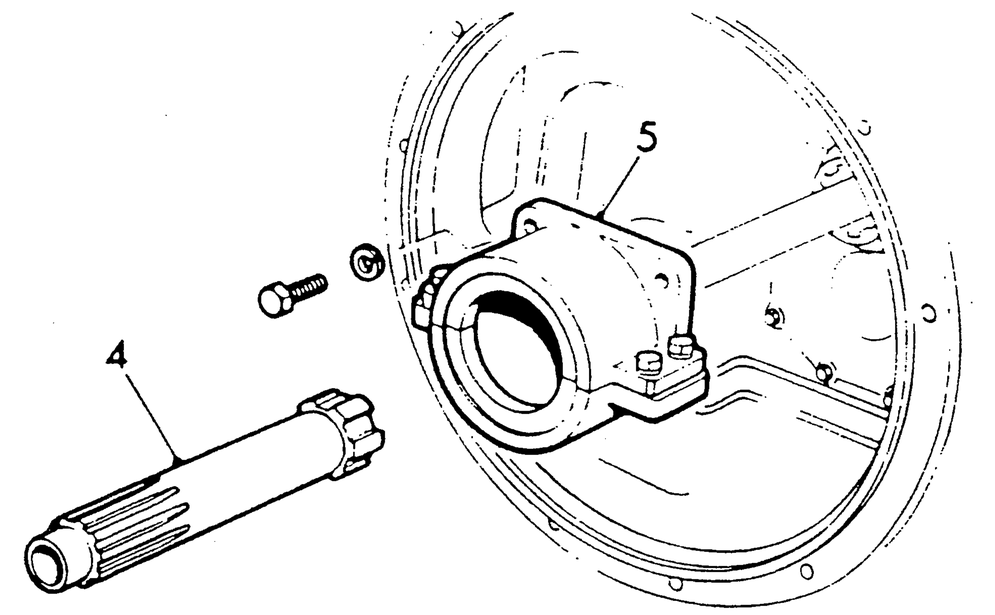

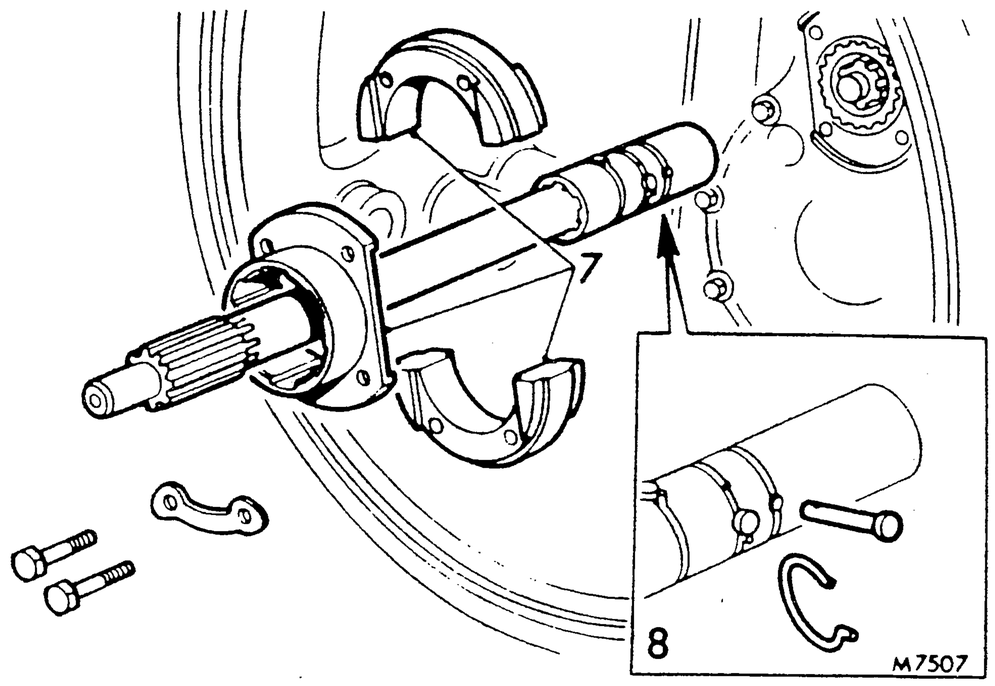

Refitting

10. Reverse removing procedure, ensuring that the P.T.O. drive coupling is correctly assembled.

DRIVING SLEEVE – MAINSHAFT – 262/272

–Remove and refit TB37.10.02

Removing

1. Remove clutch. TB33.10.01.
2. Withdraw driving sleeve from clutch operating assembly.

Refitting

3. Insert driving sleeve, ensuring that it slides freely on the splines.
4. Refit clutch. TB33.10.01.

https://tractormanualz.com/

GEARBOX TOP COVER – SELECTOR ASSEMBLY

–Remove and refit **TB37.16.37**

Removing

1. Disconnect earth lead from battery negative (–) terminal.
2. Unclip gaiters from cover.
3. Move both change speed levers into neutral positions.
4. Remove bolt securing cover and change speed linkage to gearbox top cover, noting washers and swivel bushes.
5. Remove bolts securing change speed levers to operating cross-shafts.
6. Remove P.T.O. and differential lock pedal pads and move floor mats aside.
7. Manoeuvre insulation mat from gearbox.
8. Disconnect starter isolation switch and move aside.

** 9. Remove bolts and nuts securing gearbox cover to casing and selector assembly and remove cover.

10. Withdraw selector assembly.
11. Clean joint faces.**

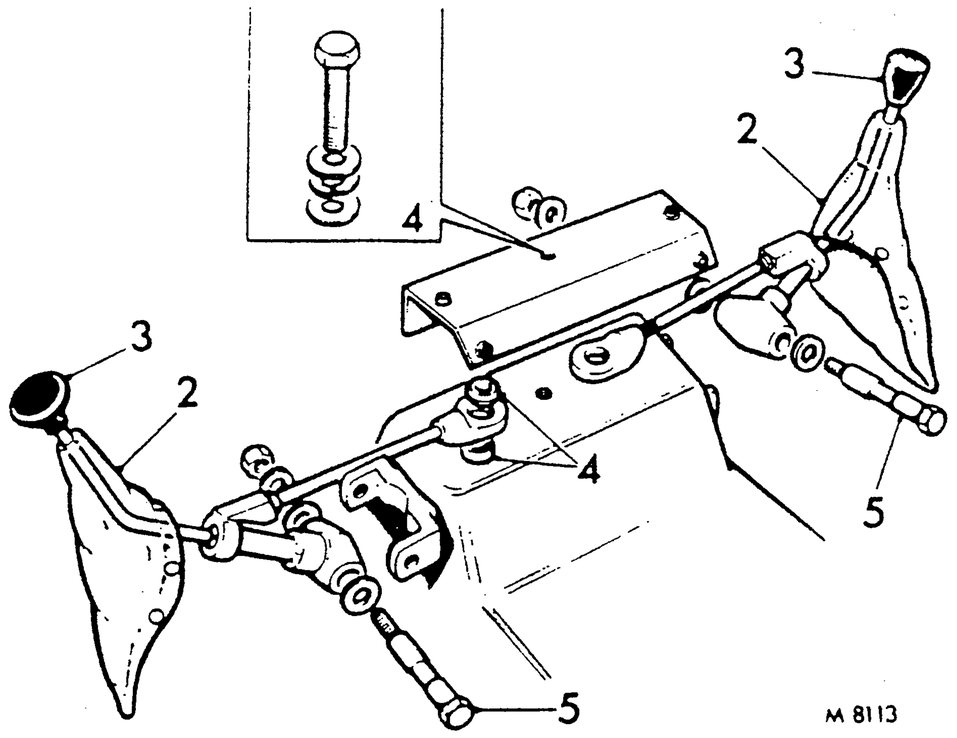

M 8113

Refitting

**12. Reverse procedure 1 to 11, noting:

a. Position selector assembly in gearbox aligning drop-arms with selector forks.**
b. Fit new top cover gasket.
c. Fit gearbox top cover and tighten bolts to torque in DATA.
**d. Refit rear selector studs, then secure selector assembly to top cover with nuts and washers.
e. Check operation of range and change speed levers, ensuring that all gears may be selected.**

**STATIC TEST — ENGINE STOPPED

The following test should be carried out after gearbox or gearbox top cover overhaul to check the detent positions of the synchro packs.

NOTE: If following a gearbox repair, this test can best be carried out prior to filling the gearbox with oil.

1. Move change speed lever slowly from first gear position to neutral (moving towards reverse). Detent should be heard whilst lever is in the neutral position. If it occurs on passing through to the opposing gear, the drop-arm must be reset or changed. If detent is biased towards any gear, it must be reset to central, neutral position.
2. Repeat operation 1 for all speed gears.**

DATA

Torque tightening figures	**Nm**	**kgf m**	**lbf ft**
Top cover to gearbox bolts	37	3,7	27

https://tractormanualz.com/

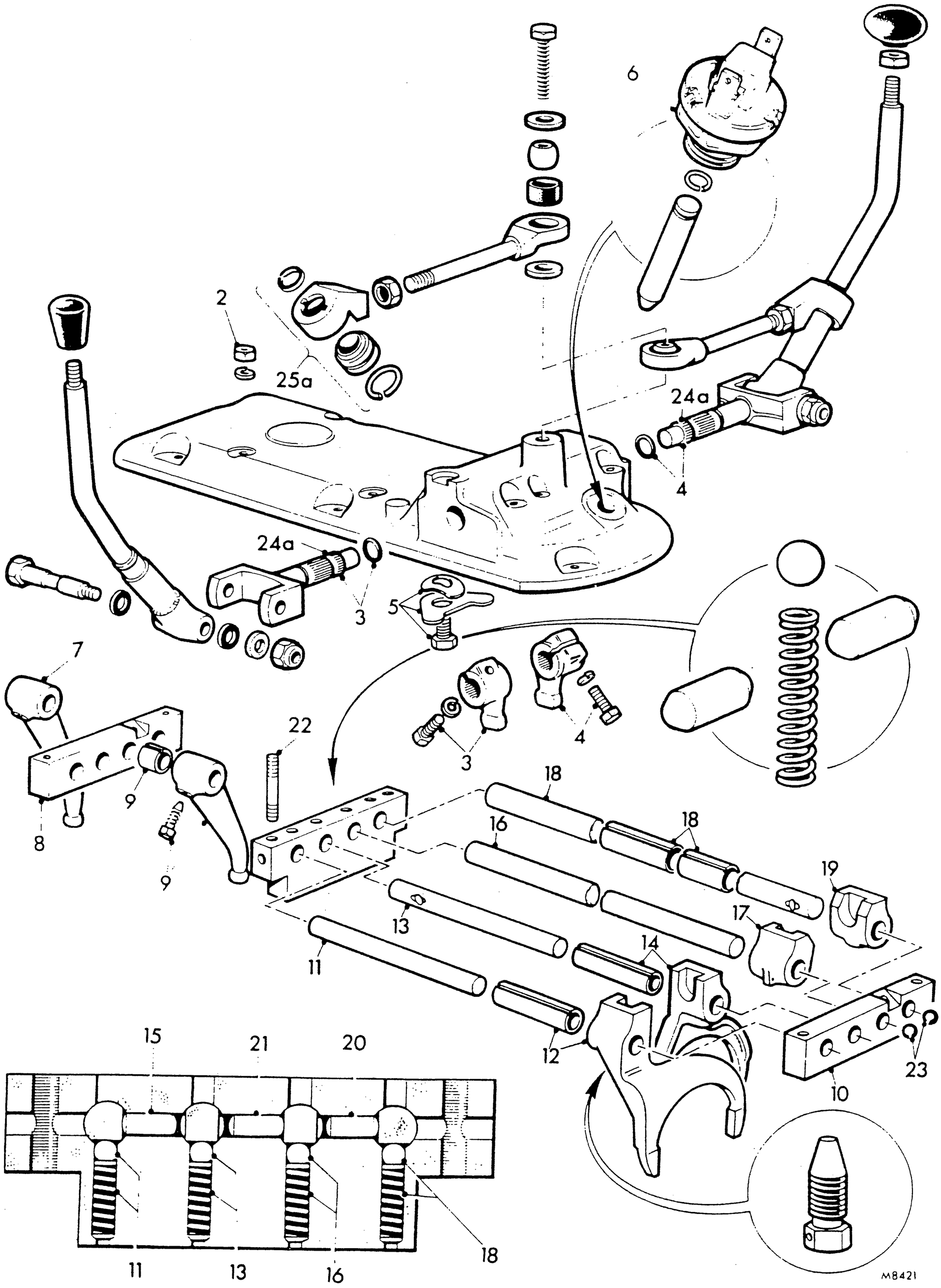
6
2
25a
24a
4
24a
3
5
7
22
3
4
18
16
18
19
9
8
9
13
17
14
11
12
10
23
15
21
20
18
11
13
16
M8421

GEARBOX TOP COVER – SELECTOR ASSEMBLY TWO-WHEEL DRIVE

–Overhaul **TB37.16.40**

Service tool: 18G 1020 A

Dismantling

NOTE: Keep all parts in correct order to facilitate reassembly.

1. Remove gearbox top cover. TB37.16.37.
2. Remove nuts securing selector assembly to top cover.
3. Release setscrew securing operating lever to gear change selector cross-shaft and withdraw shaft, noting O-ring.
4. Release setscrew securing operating lever to range change selector cross-shaft and withdraw shaft, noting O-ring.
5. Remove bolt, third high lockout plate and Belleville washer, if fitted.
6. Remove starter isolation switch and pin.
7. Remove locking wire, unscrew locating screw and slide second/third drop-arm from selector rod.
8. Remove front bearing block from selector fork.
9. Withdraw spacer tube, remove locking wire, unscrew locating screw and slide first/reverse drop-arm from selector rod.
10. Remove rear bearing block from selector rods, noting balls for isolation switch.
    NOTE: Before any selector rod is withdrawn cover top face of centre bearing block to prevent balls and springs being ejected.
11. Withdraw low range selector rod, spacer and fork assembly from centre bearing block and remove detent ball and spring.
12. Remove spacer, locking wire, locating screw and fork from selector rod.
13. Withdraw medium/high range selector rod, spacer and fork assembly from centre bearing block and remove detent ball and spring.
14. Remove spacer, locking wire, locating screw and fork from selector rod.
15. Remove interlock pin from bearing block.
16. Withdraw first/reverse gear selector rod from centre bearing block and remove detent ball and spring.
17. Remove locking wire, locating screw and selector jaw from rod.
18. Withdraw second/third selector rod and spacer tubes from centre bearing block and remove detent ball and spring.
19. Remove spacer tubes, locking wire, locating screw and selector jaw from rod.
20. Remove interlock pin from bearing block.
21. Remove reverse high lockout interlock pin from centre bearing block, if fitted.
22. Remove studs from bearing blocks.
23. Remove balls, for isolation switch, from rear bearing block.

Inspection

24. Clean all components in a suitable solvent, examine for wear or damage and replace where necessary, noting:
    a. Use tape on selector shaft splines to prevent damage to O-ring when fitting.
25. Inspect range and gear change linkages replacing, where necessary, any worn or damaged parts, noting:
    a. Bearing housings can only be replaced as complete units.

Reassembly

NOTE: Lubricate parts as they are reassembled.

26. Insert interlock pins and reverse high lockout interlock pin, if fitted, in centre bearing block.
27. Refit studs in bearing blocks.
28. Refit balls, for isolation switch in rear bearing block, using grease to retain them in position.
29. Slide operating lever onto second/third selector rod, centralise over hole, tighten and wire locating screw, then fit spacer tubes.
30. Refit spring and detent ball into centre bearing block using tool 18G 1020 A, then slide rod into bearing block until it locks.
31. Slide operating lever onto first/reverse selector rod, centralise over hole, then tighten and wire locating screw.
32. Refit spring and detent ball into centre bearing block using tool 18G 1020 A, then slide rod into bearing block until it locks.
33. Slide fork onto high/medium selector rod, centralise over hole, tighten and wire locating screw and fit spacer.
34. Refit spring and detent ball into centre bearing block using tool 18G 1020 A, then slide rod into bearing block until it locks.
35. Slide fork onto low selector rod, centralise over hole, tighten and wire locating screw and fit spacer.
36. Refit spring and detent ball into centre bearing block using tool 18G 1020 A, then slide rod into bearing block until it locks.
37. Refit rear bearing block to shafts.
38. Slide first/reverse drop arm onto selector rod, centralise over hole, tighten and wire locating screw and fit spacer tube.
39. Slide front bearing block onto selector rods.
40. Slide second/third drop arm onto selector rod, centralise over hole, then tighten and wire locating screw.
41. Refit third high lockout plate to top cover, if fitted.
42. Insert selector cross-shafts in top cover. Fit operating levers and secure with setscrews.
43. Position selector assembly in gearbox, aligning drop-arms with selector forks.
44. Refit starter isolation switch and pin.
45. Refit gearbox top cover. TB37.16.37.

https://tractormanualz.com/

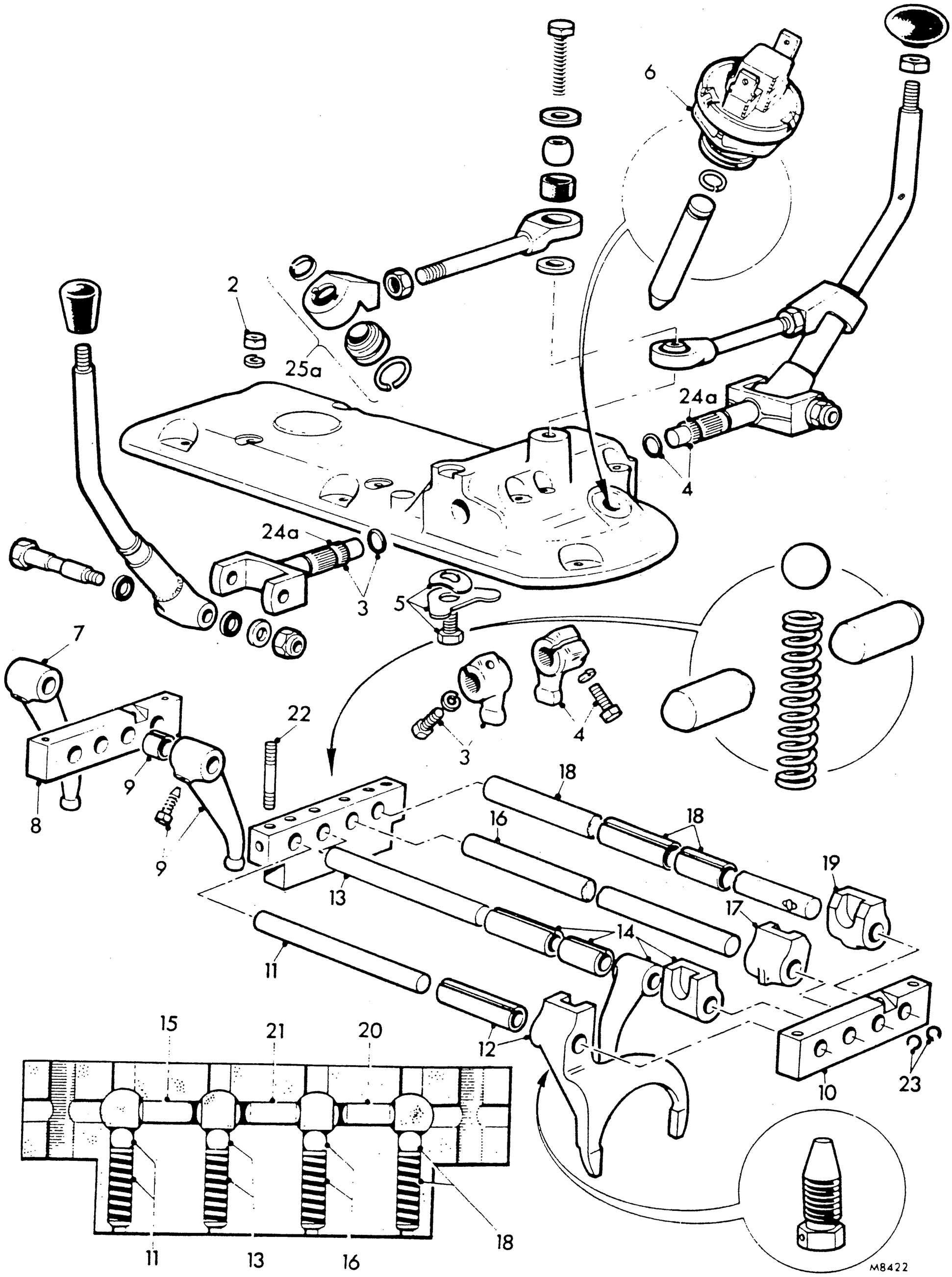

https://tractormanualz.com/

GEARBOX – TWO-WHEEL DRIVE

–Overhaul **TB37.20.04**

Service tools: LC 279, LC 280, LC 281, LC 282, LC 283, 18G 474 A, 18G 477, 2700

**Dismantling

NOTE: This procedure does not cover some early gearboxes. If parts do not correspond to the procedure and associated illustrations, the Parts List should be consulted and parts of the latest design substituted before reassembly.**

1. Remove cab. TB76.10.01.
2. Remove hydraulic lift unit. TB53.15.01.
3. Uncouple starter isolation switch and move aside together with trailer socket.
4. Remove P.T.O. connecting rod.
5. Disconnect brake rods at handbrake balance bar.
6. Remove handbrake balance bar and support bracket from gearbox.
7. 245: Split tractor as in clutch removal but do not remove clutch from flywheel. TB33.10.01.
   262/272/282: Follow clutch removal to uncouple transmission and P.T.O. shafts. TB33.10.01.
8. 245: Remove clutch release bearing assembly and mainshaft driving sleeve. TB33.25.15 and TB37.10.02. Using suitable lifting tackle disconnect clutch housing from gearbox.

NOTE: It is recommended that the following operation is carried out on a level surface.

9. 262/272/282: Using tractor splitting kit tool 2700 to support tractor, remove bolts securing clutch housing to gearbox case and separate tractor.
   Alternatively, chock front wheels, pack under clutch housing, support front of gearbox with suitable lifting tackle and remove bolts securing clutch housing to gearbox.
10. Manoeuvre gearbox over suitable workbench and support.
    NOTE: It may be necessary to remove the check strut brackets for this operation.
11. Remove transfer gear assembly and P.T.O. primary shaft; inspect and replace parts as required. TB37.29.04 and TB37.29.06.
12. Remove and overhaul gearbox top cover. TB37.16.37 and TB37.16.40.
13. Remove rear half axles. TB51.35.15.
14. Remove differential but do not replace bearings unless required. TB51.20.47.

15. Remove circlip from rear end of primary input shaft. Engage third and reverse gears, then withdraw shaft and bearing through front of gearbox casing; remove circlip and bearing from shaft.

16. Remove bolt securing reverse idler shaft.
17. Remove shaft; withdraw idler gear assembly and thrust washers.
18. Lock mainshaft by selecting high and low gears.
19. Bend back lock washer tab and release mainshaft locking nut using tool LC 279, remove nut, lock washer and washer from shaft.
20. Remove circlip from behind mainshaft rear bearing outer race, drive mainshaft rearward and lift out high range gear and bearing sleeve.

21. As mainshaft is withdrawn remove hub coupler collar, medium range gear assembly, bearing sleeve hub coupler, thrust washer, hub coupler collar, low range gear assembly, bearing sleeve hub coupler, thrust washer, selective spacer, and remove rear bearing inner race from mainshaft.

22. Remove welch plugs from front of gearbox.
23. Remove locking wire and pins securing first/reverse and second/third selector shafts to forks and withdraw shafts.
24. Remove forks from respective synchro packs.
25. Remove circlip from front of layshaft.
26. Using service tool LC 280 engaged in the internal spigot, drive out layshaft complete with rear bearing and circlip. Remove components as they are released, keeping them in the correct order as follows.
    a. Spacer and thrust washer.
    b. Second and third gear assembly complete with synchro pack, then dismantle into its component parts.
    c. Thrust washer, selective spacer and thrust washer.
    d. Bearing sleeve, reverse gear, hub coupler, synchro pack and bearing sleeve with first gear fitted.
    e. Thrust washer and spacer.
    **f. Distance piece, oil flinger, selective spacer sleeve, high range and medium range gears.
    NOTE: Spacer sleeve, oil flinger and high range gear cannot be removed at this point.**
27. Remove circlip and bearing from end of layshaft.
28. Bend back tabs on centre bearing lockwashers and slacken anti-rotation pin one-half turn.
29. Unscrew centre bearing front locknut using tool 18G 474 A, remove locknut and lockwasher, withdraw assembly rearwards and remove rear locknut and lock washer. Remove anti-rotation pin.
30. Press bearing carrier from housing, remove inner races, spacer, circlip and drift outer races from housing.
31. Remove remaining circlip and drift mainshaft outer race from gearcase.
32. Remove bearing from second wall of primary bore.

33. Lift out spacer sleeve, oil flinger, high range gear and remove layshaft centre wall bearings.

34. Remove layshaft front wall circlip and withdraw bearing.

continued

https://tractormanualz.com/

NOTES

https://tractormanualz.com/

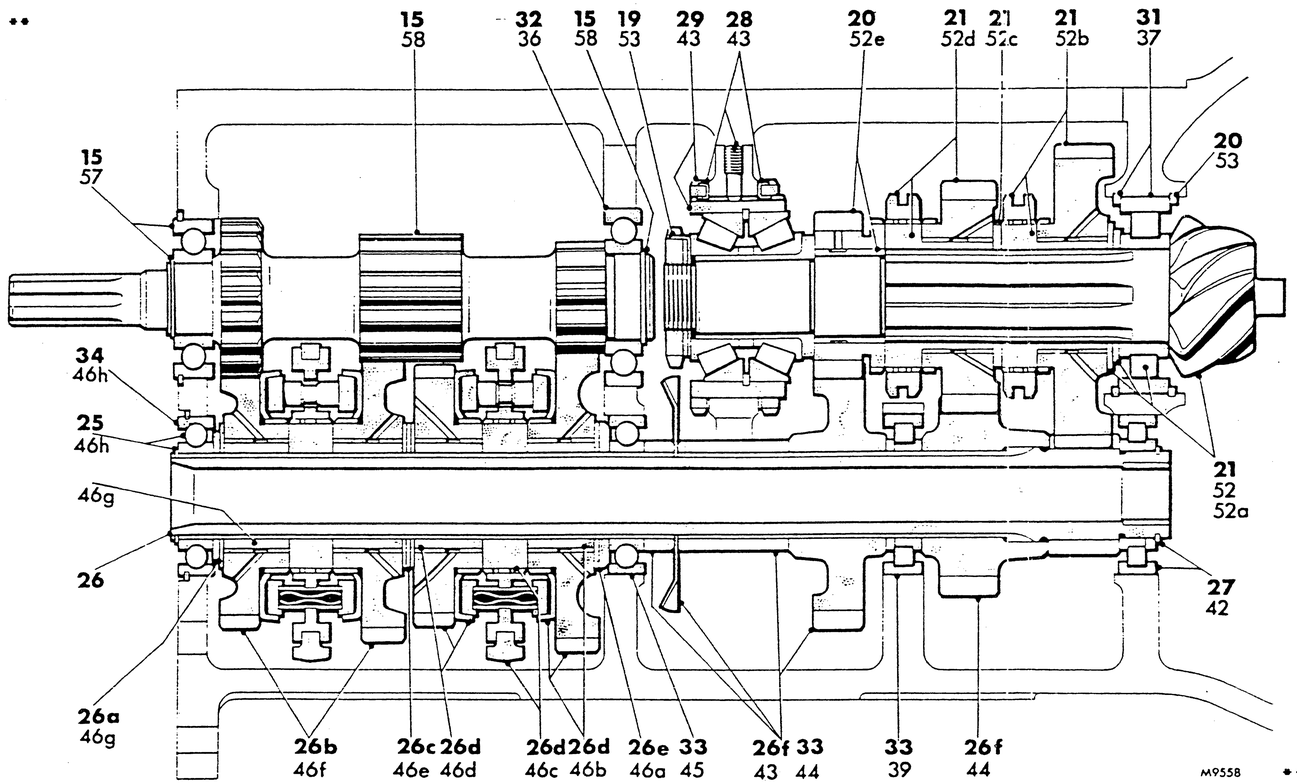
15 58
32 36
15 58
19 53
29 43
28 43
20 52e
21 52d
21 52c
21 52b
31 37
15 57
20 53
34 46h
25 46h
46g
26
21 52 52a
27 42
26a 46g
26b 46f
26c 46e
26d 46d
26d 46c
26d 46b
26e 46a
33 45
26f 43
33 44
33 39
26f 44
M9558

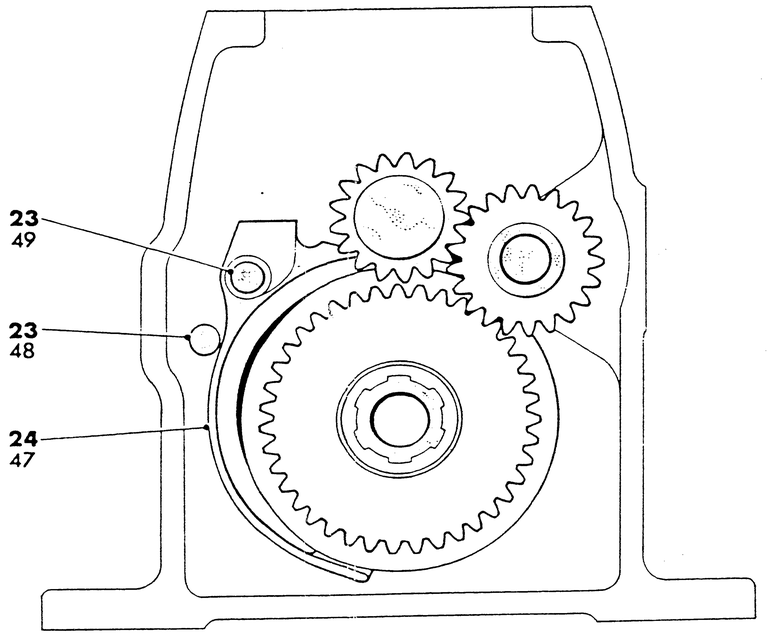
23 49
23 48
24 47

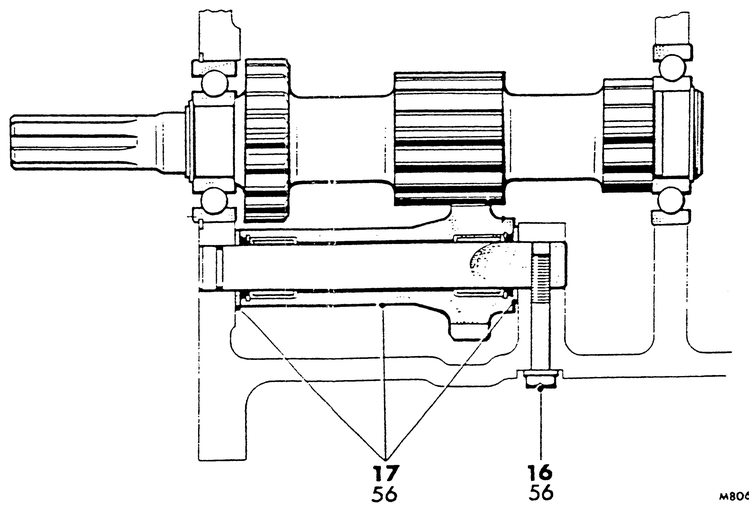
17 56
16 56
M8068-2

NOTES

Inspection

35. Clean all components in a suitable solvent, examine for wear or damage, replacing where necessary, noting:
    a. If bushes in mainshaft or layshaft gears are worn, replace using tool LC 281, ensuring holes in bushes and gears align when refitting.
    b. To remove bush from layshaft, cut a 1 in B.S.P. thread in the bush and screw in a suitable adaptor to enable the bush to be driven from the bore.
    c. Clean all joint faces.

Reassembling

NOTE: Liberally lubricate all parts when reassembling.

36. Fit bearing into second wall of primary bore.
37. Fit front circlip and outer race in rear mainshaft bore.
38. If the layshaft or any of the parts which fit onto it have to be replaced, spacers to give the correct end-float must be selected as follows.
    a. On layshaft fit medium range gear, bearing, high range gear and shortest selective spacer sleeve 'A', oil flinger, distance piece, front centre wall bearing, spacer and thrust washer. Fit synchro pack gauge tube tool LC 282 and circlip. Measure resulting gap between tube and circlip.
    b. Select a spacer sleeve 'A' to give the correct gap, see DATA.
    **c. Remove circlip, gauge tube, thrust washer, spacer, bearing, distance piece, oil flinger and fit correct spacer sleeve 'A'.
    d. Continue build of layshaft components with oil flinger, distance piece, bearing, spacer, four thrust washers and spacer, four bearing sleeves, both hub couplers, smallest selective spacer 'B', bearing and circlip.**
    e. Measure resulting gap between circlip and bearing. Select spacer 'B' to give correct gap, see DATA, then remove all components from layshaft.
39. Fit bearing into rear centre wall of layshaft bore.

continued

**

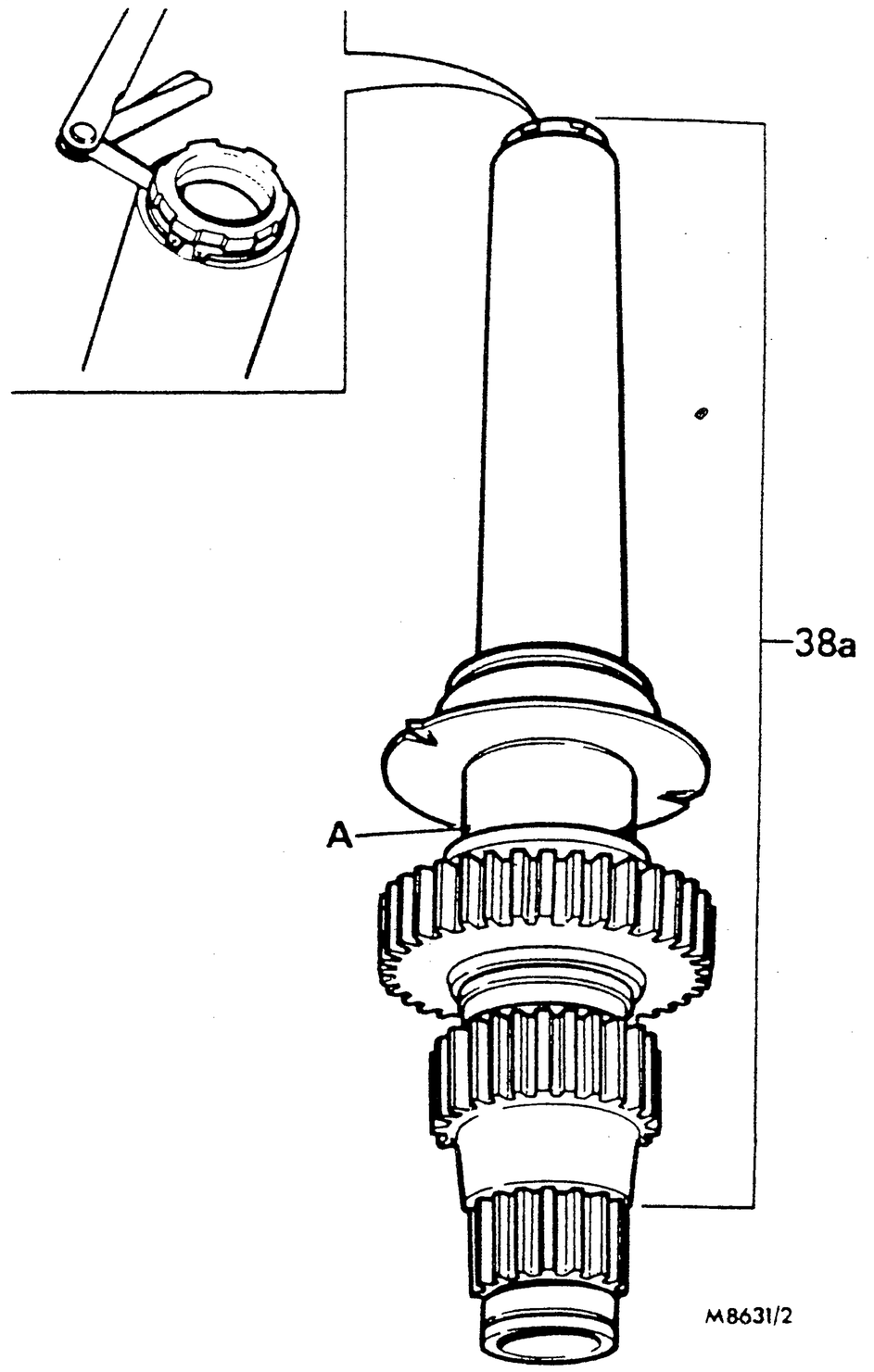

**

**

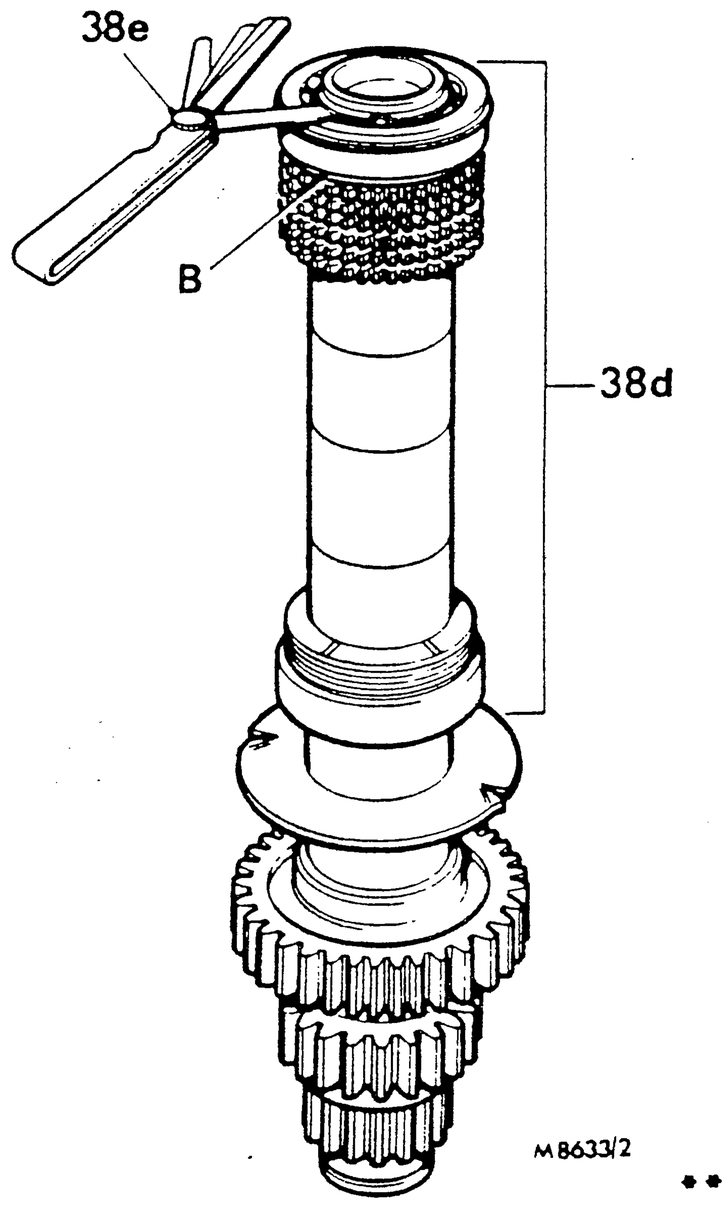

**

https://tractormanualz.com/

40. Reassemble centre bearing, if dismantled, as follows:
    a. Fit circlip and press bearing outer races into bearing housing.
    b. Press bearing inner race onto bearing carrier.
    c. Fit original spacer.
    d. Fit bearing housing over carrier and press second inner race onto bearing carrier.
41. Set centre bearing pre-load as follows:

NOTE: It is important to carry out this procedure irrespective of whether new parts are fitted or not.

    a. Grip mainshaft in soft jaws of a vice.
    b. Position bearing assembly on mainshaft, fit washer and tighten locknut using tool LC 279.
    c. Wrap a length of string four times around the bearing housing and attach a suitable spring balance. Pull spring balance and note force required to turn bearing housing on shaft, see DATA.
    d. If figure obtained in 'c' is not within tolerance in DATA, remove and dismantle centre bearing assembly, fit a spacer of different thickness as required and repeat above procedure until the torque is correct.
    e. Remove bearing from shaft and shaft from vice.
42. Fit P.T.O. bush to layshaft if removed. Refit bearing to rear end of layshaft and secure with circlip.
43. Position layshaft high range gear and selected spacer sleeve in gearbox. Replace centre bearing into housing and fit lock washers, locknuts with ground face towards bearing and anti-rotation pin but do not tighten.
44. Introduce layshaft into bore from differential end, feeding it in turn through medium range gear, bearing, high range gear, spacer sleeve, oil flinger and distance piece.

    NOTE: Use tool LC 280 to drive layshaft through components.
45. Fit layshaft front centre wall bearing, ensuring it is flush with rear face.
46. Drive layshaft progressively into the synchro box, taking care not to knock bearing from centre wall and assembling components in the following order.
    a. Spacer and thrust washer, with thrust washer face towards first gear.
    b. Bearing sleeve, first gear and cone from synchro pack.
    c. Hub coupler and synchro pack.
    d. Bearing sleeve, reverse gear and cone from synchro pack.
    e. Thrust washer with thrust face towards reverse gear, selected spacer 'B' and thrust washer with thrust face towards second gear.
    f. Assemble second and third gear pack excluding third gear bearing sleeve and manoeuvre into position. This pack consists of, second gear with bearing sleeve, hub coupler, synchro pack and third gear.

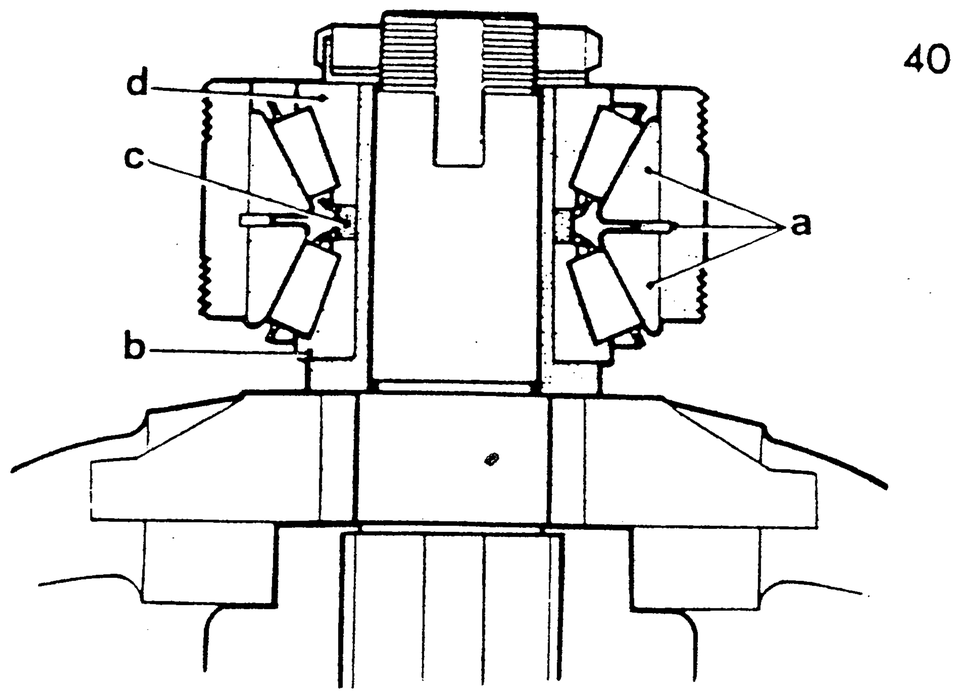

40

41

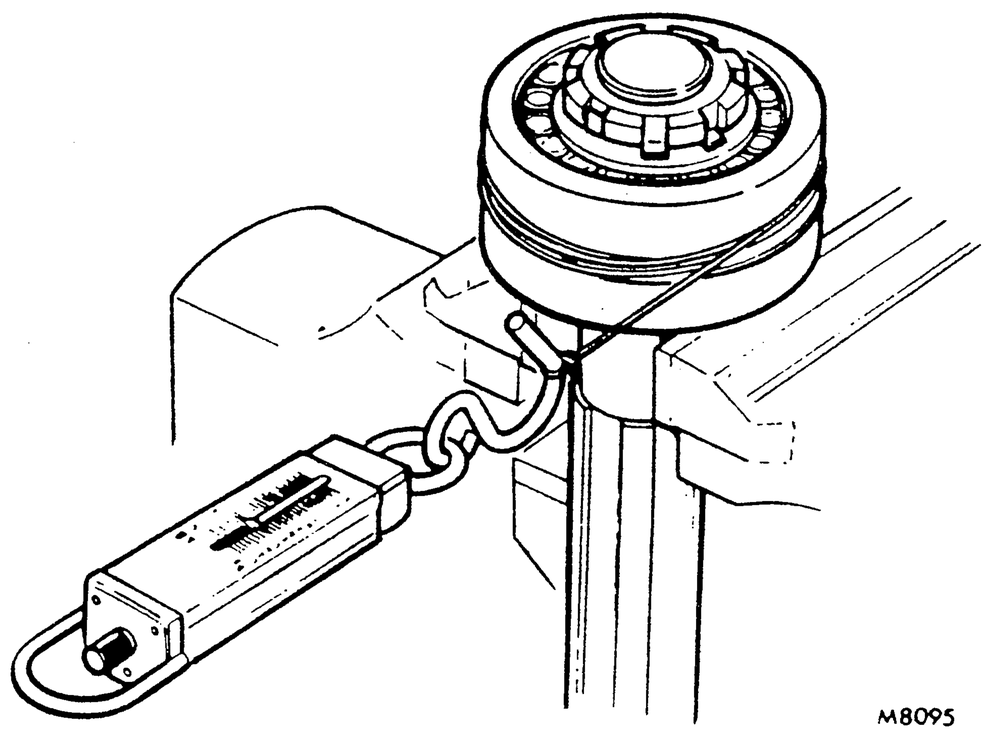

M8095

    g. Insert bearing sleeve into third gear, drive shaft fully forward, position thrust washer with thrust face towards third gear and fit spacer.
    h. Fit bearing and press in fully to fit circlip on front of layshaft.
    j. Drive layshaft back so that circlip is hard against bearing shoulder and circlip in bearing is hard against gearbox recess.

    NOTE: The circlip groove can be broken by rough treatment. An internal spigot is provided in the layshaft and this should be used to drive the layshaft into position.
47. Refit forks into respective synchro packs.
48. Feed in second/third selector shaft, then tighten and wire the locking pin.
49. Feed in first/reverse selector shaft, then tighten and wire the locking pin.
50. Fit welch plugs in front of gearbox, using sealing compound quoted in DATA.

continued

51. If the mainshaft or any of the parts which fit onto it have to be replaced, a spacer to give the correct gear end-float must be selected as follows.

a. Onto mainshaft fit the rear bearing inner race, smallest spacer, thrust washers, bearing sleeve hub couplers, high range gear with bearing sleeve bush and tool LC 283.

b. Tighten locknut until it just secures assembly. Measure resulting gap in assembly, choosing a spacer from range to give clearance in DATA.

52. Remove components, except rear bearing, from mainshaft and introduce mainshaft progressively from rear of box, building in the following order.

a. Selected spacer and thrust washer with thrust face towards low gear.

b. Bearing sleeve hub coupler with low range gear and hub collar.

c. Thrust washer with chamfer towards pinion head.

d. Bearing sleeve hub coupler with medium range gear and hub collar.

e. High range gear and bearing sleeve bush.

53. Drive mainshaft fully forward and fit lock washer, washer and locknut, treated with locking compound specified in DATA. Lock mainshaft by selecting high and low gear. Tighten locknut to torque in DATA and bend over tab on lockwasher. Fit circlip behind rear mainshaft bearing outer race.

54. Position tool 18G 477 against inner face of differential housing bore and adjust the centre bearing locknuts using tool 18G 474 A until the ground face of pinion just touches the gauge peg with both locknuts tightened to torque in DATA.

**55. Put selectors in neutral and check all gears rotate freely.

NOTE: Mainshaft will be tight due to pre-load on centre bearing.**

56. Fit reverse idler gear assembly, thrust washers and shaft, ensuring O-ring is serviceable and secure shaft with bolt tightening to torque in DATA and sealing with compound quoted in DATA.

57. Fit bearing and circlip onto primary shaft and move synchro packs to select third and reverse gears.

58. Refit primary shaft ensuring all gears mesh correctly and the rear bearing is not pushed from its bore. Fit circlip retaining bearing to primary shaft.

59. Put selectors in neutral and check all gears rotate freely.

60. Refit differential assembly and set backlash, see TB51.20.47.

61. Refit rear half axles. TB51.35.15.

62. Refit P.T.O. shaft and transfer gear assembly TB37.29.04 and TB37.29.06.

63. Refit gearbox top cover, see TB37.16.37, but not the gear and range change levers.

64. 245: Fit clutch release bearing assembly and mainshaft driving sleeve. TB33.25.15 and TB37.10.02.

65. 262/272/282: Re-connect clutch housing to gearbox case.

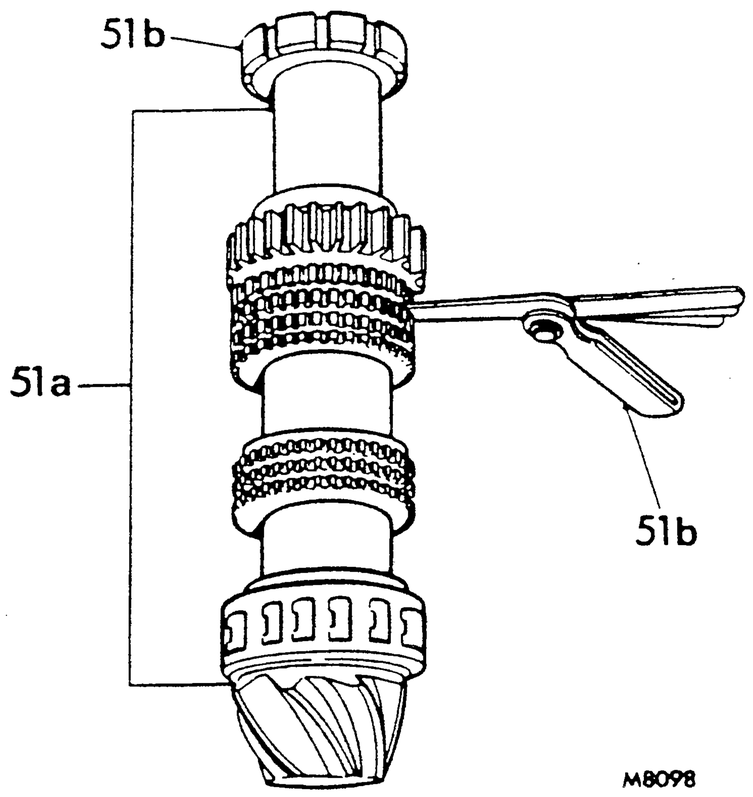

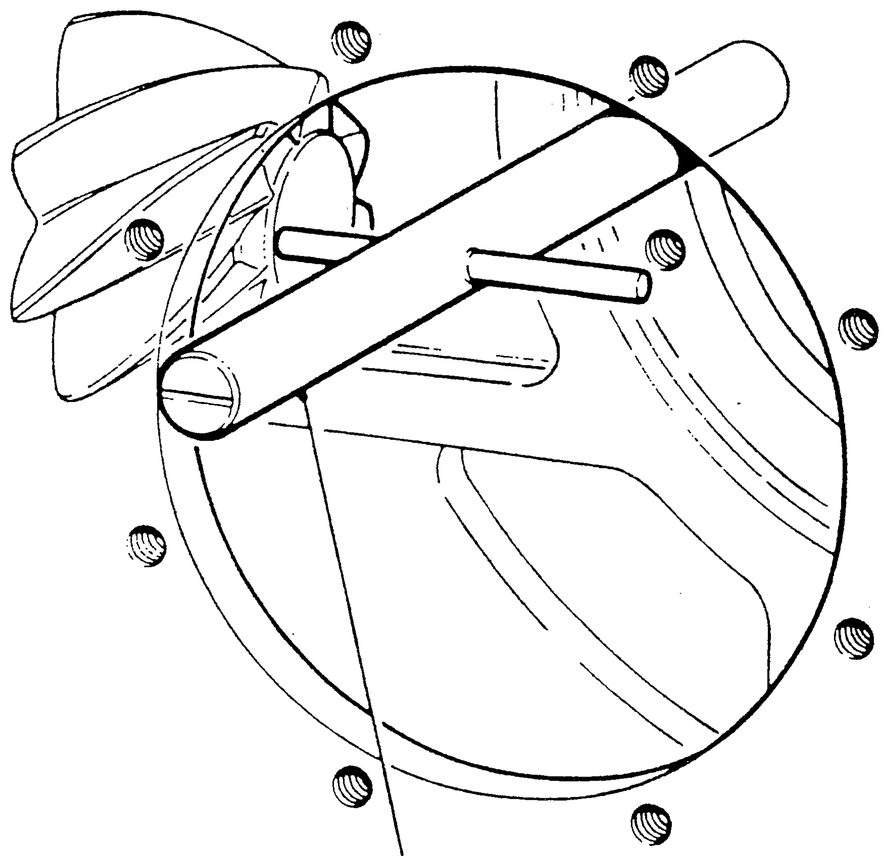

66. 262/272/282: Follow clutch refitment to couple transmission and P.T.O. drive shafts. TB33.10.01.

67. 245: Connect tractor as in clutch refitment. TB33.10.01.

68. Refit handbrake balance bar and support bracket to gearbox.

69. Refit hydraulic lift unit. TB53.15.01.

70. Refill transmission with oil.

71. Reconnect isolation switch and trailer socket.

72. Refit cab. TB76.10.01.

73. Refit P.T.O. connecting rod.

74. Reconnect brake rods at handbrake balance bar.

continued

https://tractormanualz.com/

**TRANSMISSION TESTS — ENGINE RUNNING

Check for tight bushes

1. **Synchro gears**
   a. Ensure change speed lever is in neutral.
   b. Engage low range gear and run engine up to 1000 rev/min with brakes off.

   Tractor should remain stationary with no change in rev/min.

   NOTE: If when carrying out tests 1 and 2 partial seizure has occurred, tractor will creep. If total seizure has occurred, tractor will move at a speed relative to the seized gear.

Movement test — to check operation
   a. Select any range gear.
   b. Select 1st or 2nd speed gear and whilst on the move select reverse gear. No noise should be heard.
   c. Road test the tractor to check operation in all gears.

2. **Constant mesh gears**
   a. Ensure range change lever is in neutral.
   b. Engage reverse gear and run engine up to 1000 rev/min with brakes off.

   Tractor should remain stationary with no change in rev/min.**

DATA

Gearbox mainshaft

Torque required to turn centre bearing:	
New bearings fitted	1,35 to 2,81 Nm (13,8 to 28,7 kgf cm, 12 to 25 lbf in). This torque is obtained if a pull of 24 to 49 N (2,5 to 5 kgf, 5.4 to 11.1 lbf) is recorded on the spring balance
Original bearings fitted	0,67 to 1,41 Nm (6,9 to 14,3 kgf cm, 6 to 12.5 lbf in). This torque is obtained if a pull of 12 to 24 N (1,25 to 2,5 kgf, 2.7 to 5.5 lbf) is recorded on the spring balance
Pinion setting dimension	30,16 mm (1.1875 in) between ground face of pinion and circumference of differential carrier bearing bore
End-float of mainshaft gears	0,127 to 0,254 mm (0.005 to 0.010 in)
End-float adjustment spacers available	3.55 mm (0.140 in) to 5.58 mm (0.220 in) in steps of 0,127 mm (0.005 in)

Gearbox layshaft

Selective spacer 'A':	
**Required gap	0,000 to 0,254 mm (0.000 to 0.010 in)
Adjustment spacer sleeves available	62,48 mm (2.46 in) to 64,52 mm (2.54 in) in steps of 0,25 mm (0.010 in)**
Selective spacer 'B':	
Required gap	0,000 to 0,254 mm (0.000 to 0.010 in)
**Adjustment spacers available	2,34 mm (0.094 in) to 3,81 mm (0.150 in) in steps of 0,101 mm (0.004 in)**

Torque tightening figures	**Nm**	**kgf m**	**lbf ft**
**Mainshaft locknut	245	25	180
NOTE: The correct torque is obtained by using tool LC 279 with a torque wrench set at 190 Nm (19,4 kgf m, 140 lbf ft).**			
Mainshaft bearing adjusting	163	16,6	120
NOTE: The correct torque is obtained by using tool 18G 474 A with a torque wrench set to the figure stamped on the tool.			
**Reverse idler gear locking bolt	37	3,7	27**
Selector cover screws and nuts	37	3,7	27
Transfer housing to gearbox bolts	37	3,7	27
Transfer housing cover screws	20	2,1	15

Special lubricants and compounds

Mainshaft locknut locking compound	Loctite 222 (degrease threads before application)
**Welch plug seating compound	Hylomar
Reverse idler gear locking bolt sealing compound	Hylomar**

https://tractormanualz.com/

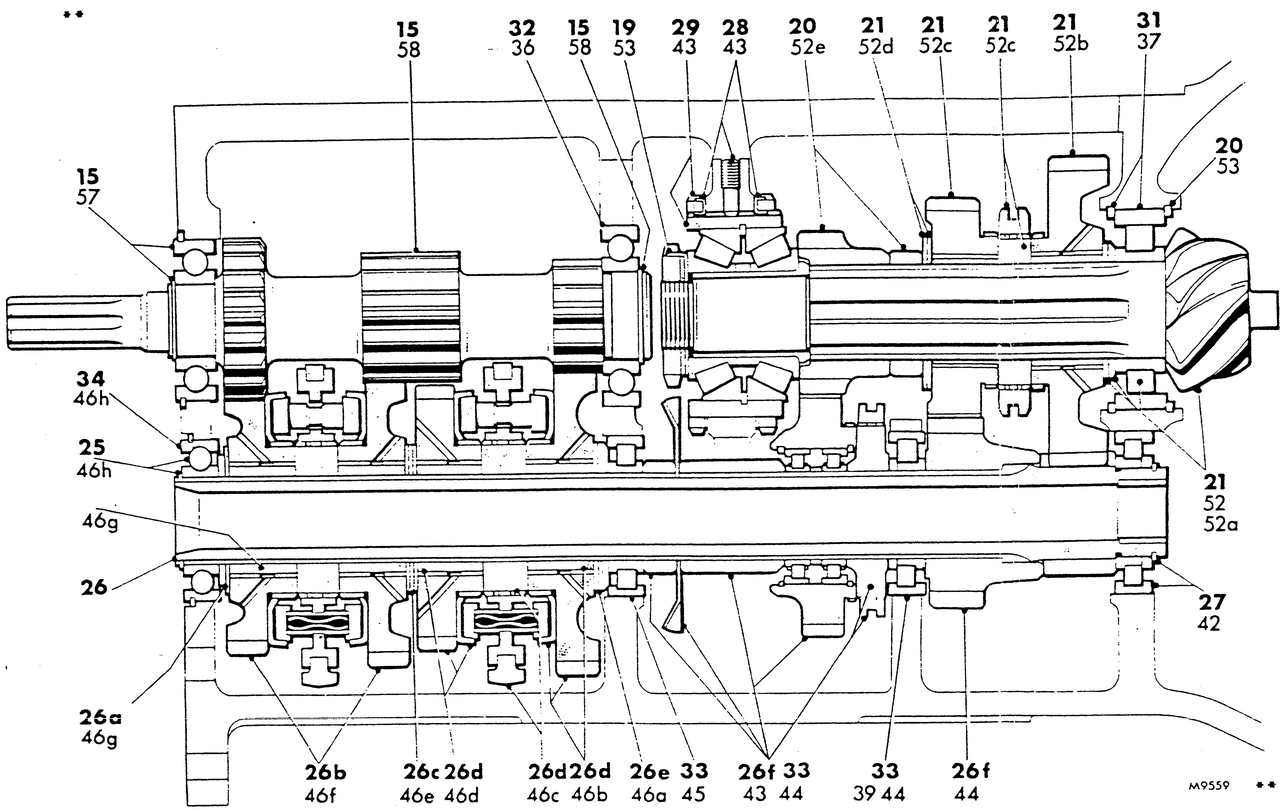
**
15 58
32 36
15 58
19 53
29 43
28 43
20 52e
21 52d
21 52c
21 52c
21 52b
31 37
20 53
15 57
34 46h
25 46h
46g
26
26a 46g
21 52 52a
27 42
26b 46f
26c 26d 46e 46d
26d 26d 46c 46b
26e 33 46a 45
26f 33 43 44
33 39 44
26f 44
M9559
**

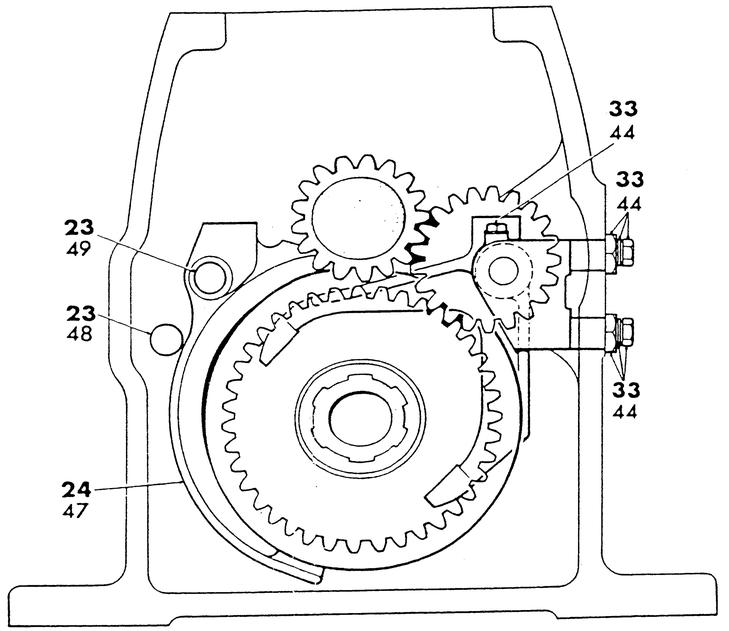
33 44
33 44
23 49
23 48
24 47
33 44

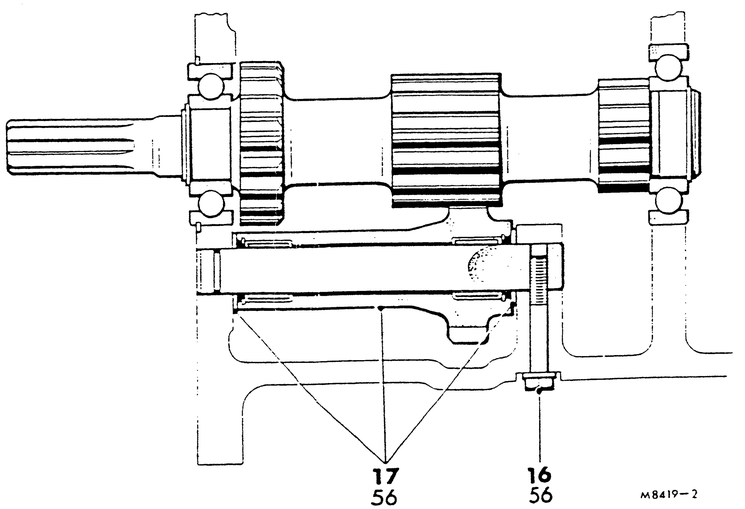
17 56
16 56
M8419–2

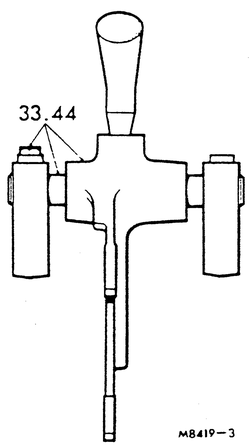
33.44
M8419–3

NOTES

Inspection

35. Clean all components in a suitable solvent, examine for wear or damage, replacing where necessary, noting:
    a. If bushes in mainshaft or layshaft gears are worn, replace using tool LC 281, ensuring holes in bushes and gears align when refitting.
    b. To remove bush from layshaft, cut a 1 in B.S.P. thread in the bush and screw in a suitable adaptor to enable the bush to be driven from the bore.
    c. Clean all joint faces.
    d. Inspect high range gear. If new components are required ensure that minimal end-float exists between bearing and circlips using range of selected spacers quoted in DATA.

**** Reassembling**

NOTE: Liberally lubricate all parts when reassembling.**

36. Fit bearing into second wall of primary bore.
37. Fit front circlip and outer race in rear mainshaft bore.
38. If the layshaft or any of the parts which fit onto it have to be replaced, spacers to give the correct end-float must be selected as follows.
    a. On layshaft fit medium range gear, bearing, hub coupler, high range gear assembly, shortest selective spacer sleeve 'A', oil flinger, distance piece, bearing, spacer and thrust washer. Fit synchro pack gauge tube tool LC 282 and circlip. Measure resulting gap between tube and circlip.
    b. Select a spacer sleeve 'A' to give the correct gap, see DATA.
    c. Remove circlip, gauge tube, thrust washer, spacer, bearing, distance piece, oil flinger and fit correct spacer sleeve 'A'.
    d. Continue build of layshaft components with oil flinger, distance piece, bearing, spacer, four thrust washers and thin spacer, four bearing sleeves, both hub couplers, smallest selective spacer 'B', bearing and circlip.
    e. Measure resulting gap between circlip and bearing. Select spacer 'B' to give correct gap, see DATA, then remove all components from layshaft.
39. Fit bearing into rear centre wall of layshaft bore.

continued

**

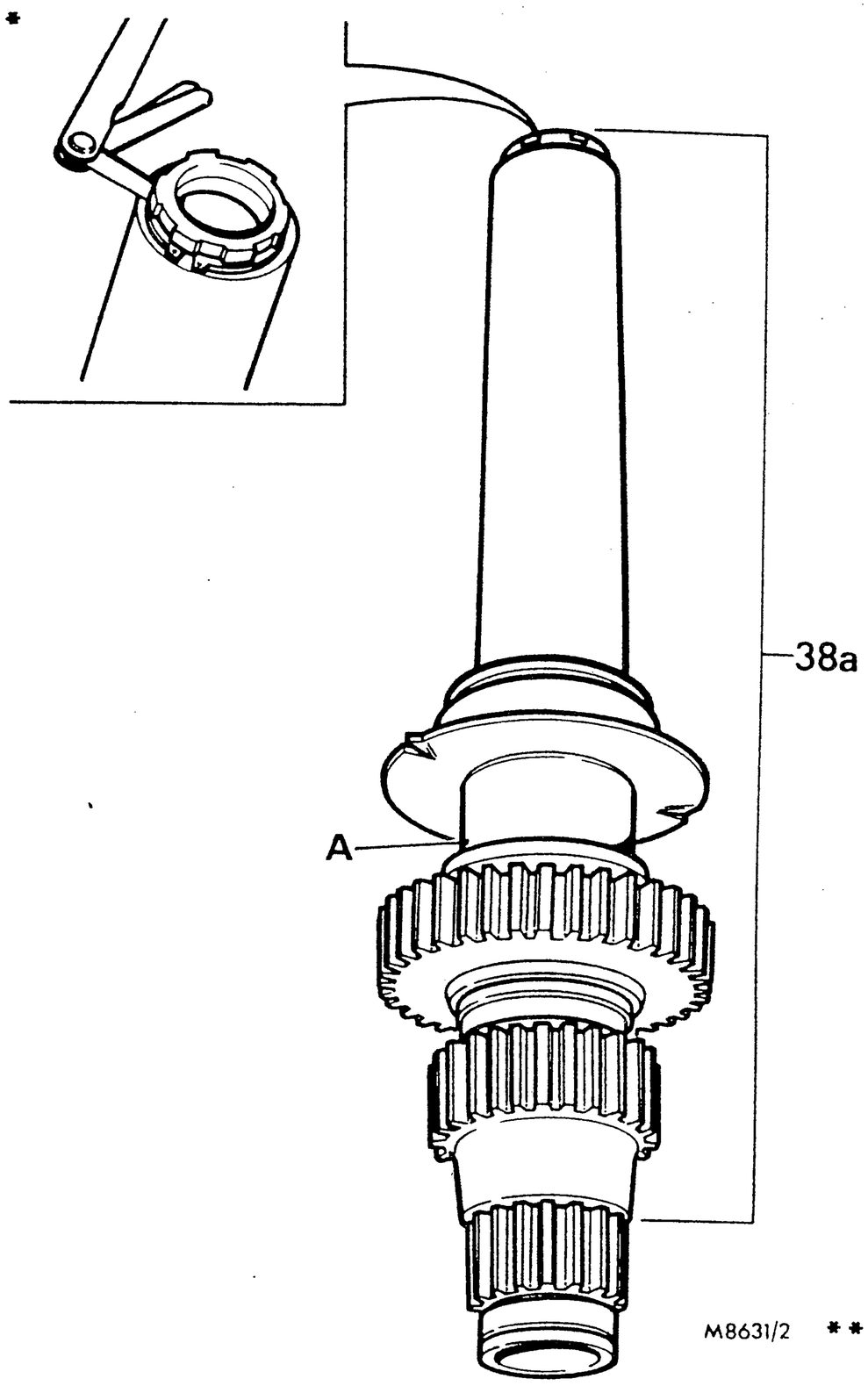

M8631/2 **

**

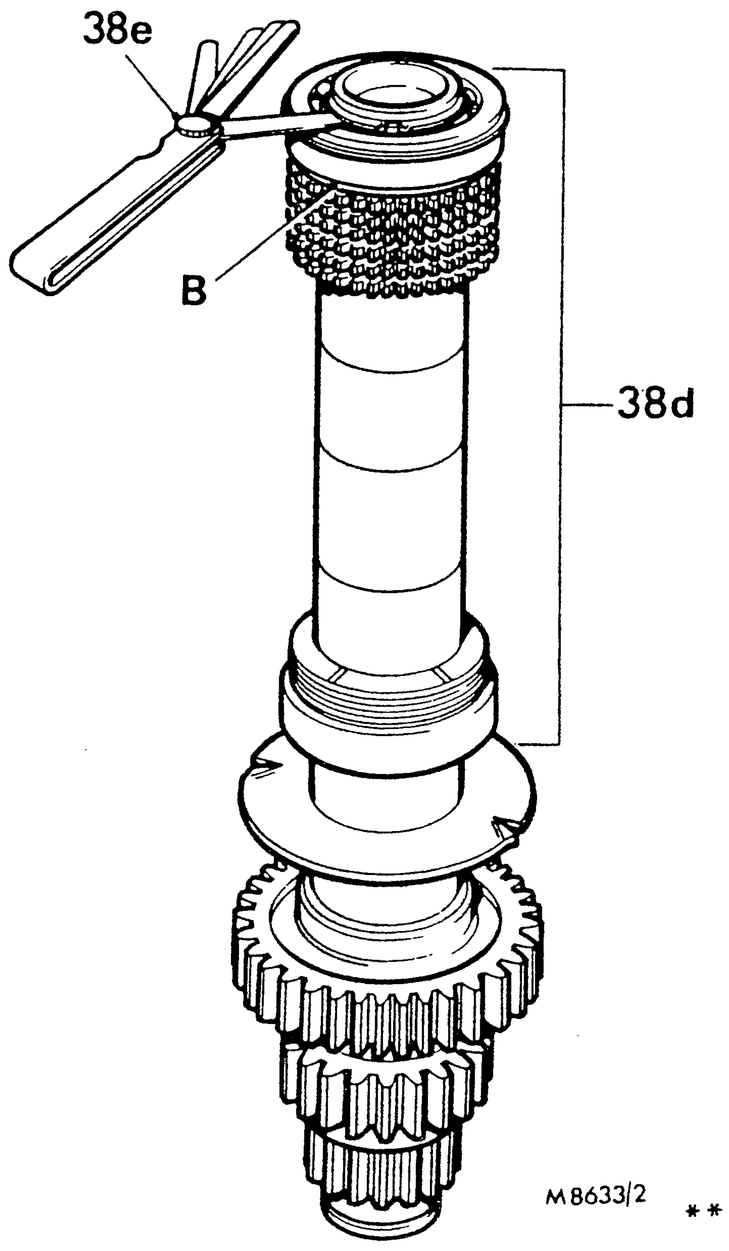

M8633/2 **

https://tractormanualz.com/

40. Reassemble centre bearing, if dismantled, as follows:
    a. Fit circlip and press bearing outer races into bearing housing.
    b. Press bearing inner race onto bearing carrier.
    c. Fit original spacer.
    d. Fit bearing housing over carrier and press second inner race onto bearing carrier.
41. Set centre bearing pre-load as follows:

NOTE: It is important to carry out this procedure irrespective of whether new parts are fitted or not.

    a. Grip mainshaft in soft jaws of a vice.
    b. Position bearing assembly on mainshaft, fit washer and tighten locknut using tool LC 279.
    c. Wrap a length of string four times around the bearing housing and attach a suitable spring balance. Pull spring balance and note force required to turn bearing housing on shaft, see DATA.
    d. If figure obtained in 'c' is not within tolerance in DATA, remove and dismantle centre bearing assembly, fit a spacer of different thickness as required and repeat above procedure until the torque is correct.
    e. Remove bearing from shaft and shaft from vice.
42. Fit P.T.O. bush to layshaft if removed. Refit bearing to rear end of layshaft and secure with circlip.
**43. Fit new oil seals to bolts, refit plugs treated with locking compound quoted in DATA, and secure bearing blocks to gearcase, locate selector fork on rod and secure assembly with locking bolt. Position layshaft high range gear assembly, selected spacer sleeve, hub coupler and collar in gearbox. Replace mainshaft centre bearing in housing and fit washers, locknuts with ground face towards bearing and anti-rotation pin but do not tighten.
44. Introduce layshaft into bore from differential end, feeding it in turn through medium range gear, bearing, hub coupler, high range gear assembly, spacer sleeve, oil flinger and distance piece.**

NOTE: Use tool LC 280 to drive layshaft through components.

45. Fit layshaft front centre wall bearing, ensuring it is flush with rear face.
46. Drive layshaft progressively into the synchro box, taking care not to knock bearing from centre wall and assembling components in the following order.
    a. Spacer and thrust washer, with thrust washer facing towards first gear.
    b. Bearing sleeve, first gear and cone from synchro pack.
    c. Hub coupler and synchro pack.
    d. Bearing sleeve, reverse gear and cone from synchro pack.
    e. Thrust washer with thrust face towards reverse gear, selected spacer 'B' and thrust washer with thrust face towards second gear.
    f. Assemble second and third gear pack excluding third gear bearing sleeve and manoeuvre into position. This pack consists of, second gear with bearing sleeve, hub coupler, synchro pack and third gear.
    g. Insert bearing sleeve into third gear, drive shaft fully forward, position thrust washer with thrust face towards third gear and fit spacer.
    h. Fit bearing and press in fully to fit circlip on front of layshaft.
    j. Drive layshaft back so that circlip is hard against bearing shoulder and circlip in bearing is hard against gearbox recess.

    NOTE: The circlip groove can be broken by rough treatment. An internal spigot is provided in the layshaft and this should be used to drive the layshaft into position.
47. Refit forks into respective synchro packs.
48. Feed in second/third selector shaft, then tighten and wire the locking pin.
49. Feed in first/reverse selector shaft, then tighten and wire the locking pin.
50. Fit welch plugs in front of gearbox using sealing compound quoted in DATA.

40

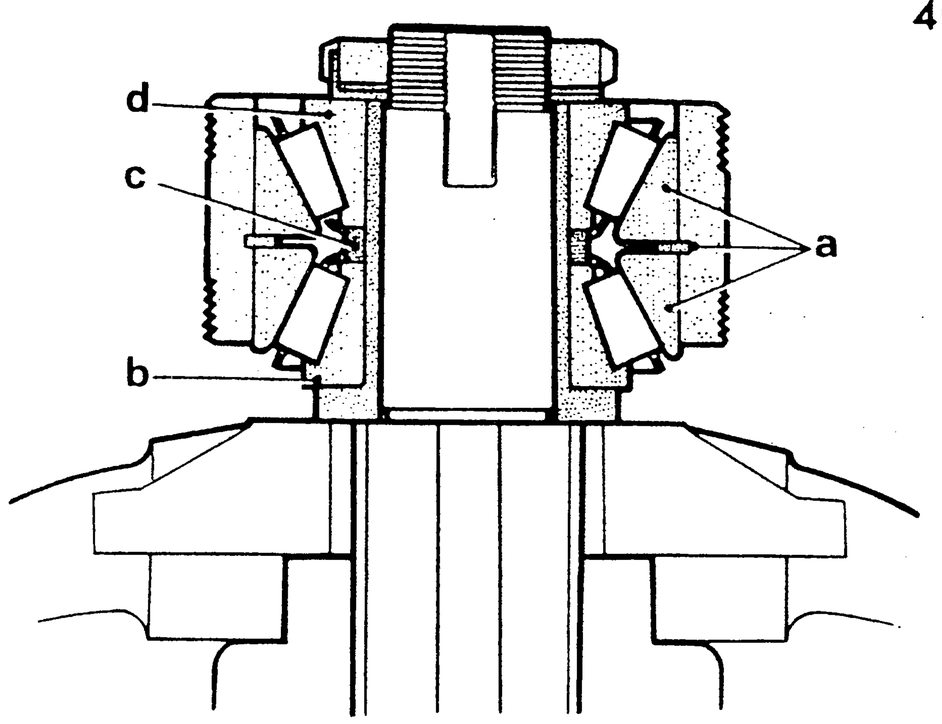

41

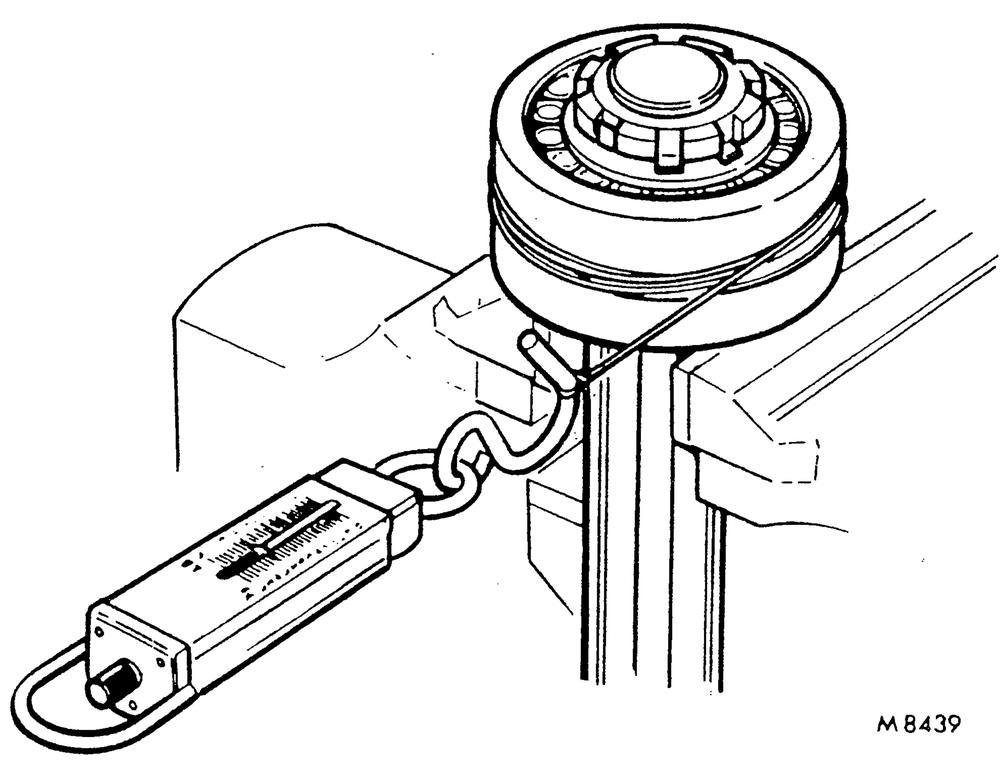

continued

https://tractormanualz.com/

40. Reassemble centre bearing, if dismantled, as follows:
    a. Fit circlip and press bearing outer races into bearing housing.
    b. Press bearing inner race onto bearing carrier.
    c. Fit original spacer.
    d. Fit bearing housing over carrier and press second inner race onto bearing carrier.
41. Set centre bearing pre-load as follows:

NOTE: It is important to carry out this procedure irrespective of whether new parts are fitted or not.

    a. Grip mainshaft in soft jaws of a vice.
    b. Position bearing assembly on mainshaft, fit washer and tighten locknut using tool LC 279.
    c. Wrap a length of string four times around the bearing housing and attach a suitable spring balance. Pull spring balance and note force required to turn bearing housing on shaft, see DATA.
    d. If figure obtained in 'c' is not within tolerance in DATA, remove and dismantle centre bearing assembly, fit a spacer of different thickness as required and repeat above procedure until the torque is correct.
    e. Remove bearing from shaft and shaft from vice.
42. Fit P.T.O. bush to layshaft if removed. Refit bearing to rear end of layshaft and secure with circlip.
**43. Fit new oil seals to bolts, refit plugs treated with locking compound quoted in DATA, and secure bearing blocks to gearcase, locate selector fork on rod and secure assembly with locking bolt. Position layshaft high range gear assembly, selected spacer sleeve, hub coupler and collar in gearbox. Replace mainshaft centre bearing in housing and fit washers, locknuts with ground face towards bearing and anti-rotation pin but do not tighten.
44. Introduce layshaft into bore from differential end, feeding it in turn through medium range gear, bearing, hub coupler, high range gear assembly, spacer sleeve, oil flinger and distance piece.**

NOTE: Use tool LC 280 to drive layshaft through components.

45. Fit layshaft front centre wall bearing, ensuring it is flush with rear face.
46. Drive layshaft progressively into the synchro box, taking care not to knock bearing from centre wall and assembling components in the following order.
    a. Spacer and thrust washer, with thrust washer facing towards first gear.
    b. Bearing sleeve, first gear and cone from synchro pack.
    c. Hub coupler and synchro pack.
    d. Bearing sleeve, reverse gear and cone from synchro pack.
    e. Thrust washer with thrust face towards reverse gear, selected spacer 'B' and thrust washer with thrust face towards second gear.
    f. Assemble second and third gear pack excluding third gear bearing sleeve and manoeuvre into position. This pack consists of, second gear with bearing sleeve, hub coupler, synchro pack and third gear.
    g. Insert bearing sleeve into third gear, drive shaft fully forward, position thrust washer with thrust face towards third gear and fit spacer.
    h. Fit bearing and press in fully to fit circlip on front of layshaft.
    j. Drive layshaft back so that circlip is hard against bearing shoulder and circlip in bearing is hard against gearbox recess.

NOTE: The circlip groove can be broken by rough treatment. An internal spigot is provided in the layshaft and this should be used to drive the layshaft into position.

47. Refit forks into respective synchro packs.
48. Feed in second/third selector shaft, then tighten and wire the locking pin.
49. Feed in first/reverse selector shaft, then tighten and wire the locking pin.
50. Fit welch plugs in front of gearbox using sealing compound quoted in DATA.

40

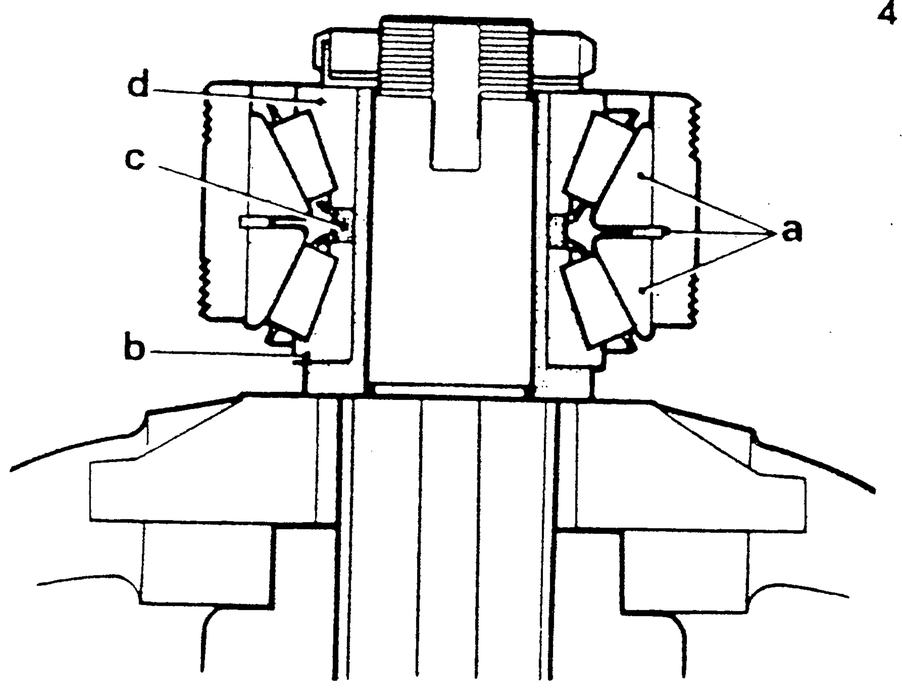

41

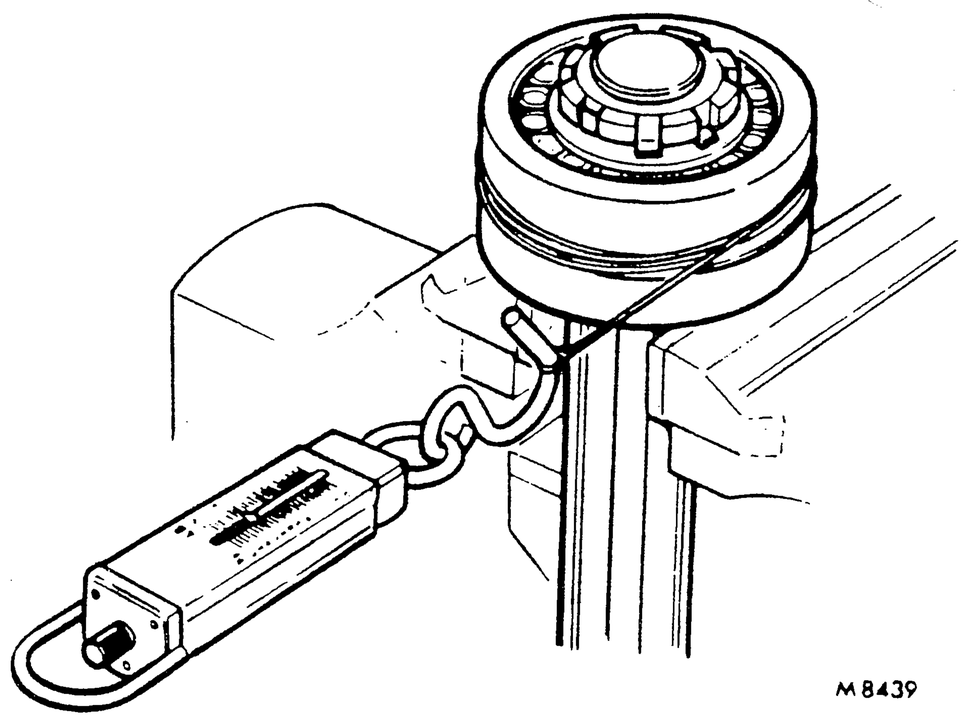

continued

Inspection

35. Clean all components in a suitable solvent, examine for wear or damage, replacing where necessary, noting:
    a. If bushes in mainshaft or layshaft gears are worn, replace using tool LC 281, ensuring holes in bushes and gears align when refitting.
    b. To remove bush from layshaft, cut a 1 in B.S.P. thread in the bush and screw in a suitable adaptor to enable the bush to be driven from the bore.
    c. Clean all joint faces.
    d. Inspect high range gear. If new components are required ensure that minimal end-float exists between bearing and circlips using range of selected spacers quoted in DATA.

**** Reassembling**

NOTE: Liberally lubricate all parts when reassembling.**

36. Fit bearing into second wall of primary bore.
37. Fit front circlip and outer race in rear mainshaft bore.
38. If the layshaft or any of the parts which fit onto it have to be replaced, spacers to give the correct end-float must be selected as follows.
    a. On layshaft fit medium range gear, bearing, hub coupler, high range gear assembly, shortest selective spacer sleeve 'A', oil flinger, distance piece, bearing, spacer and thrust washer. Fit synchro pack gauge tube tool LC 282 and circlip. Measure resulting gap between tube and circlip.
    b. Select a spacer sleeve 'A' to give the correct gap, see DATA.
    c. Remove circlip, gauge tube, thrust washer, spacer, bearing, distance piece, oil flinger and fit correct spacer sleeve 'A'.
    d. Continue build of layshaft components with oil flinger, distance piece, bearing, spacer, four thrust washers and thin spacer, four bearing sleeves, both hub couplers, smallest selective spacer 'B', bearing and circlip.
    e. Measure resulting gap between circlip and bearing. Select spacer 'B' to give correct gap, see DATA, then remove all components from layshaft.
39. Fit bearing into rear centre wall of layshaft bore.

continued

**

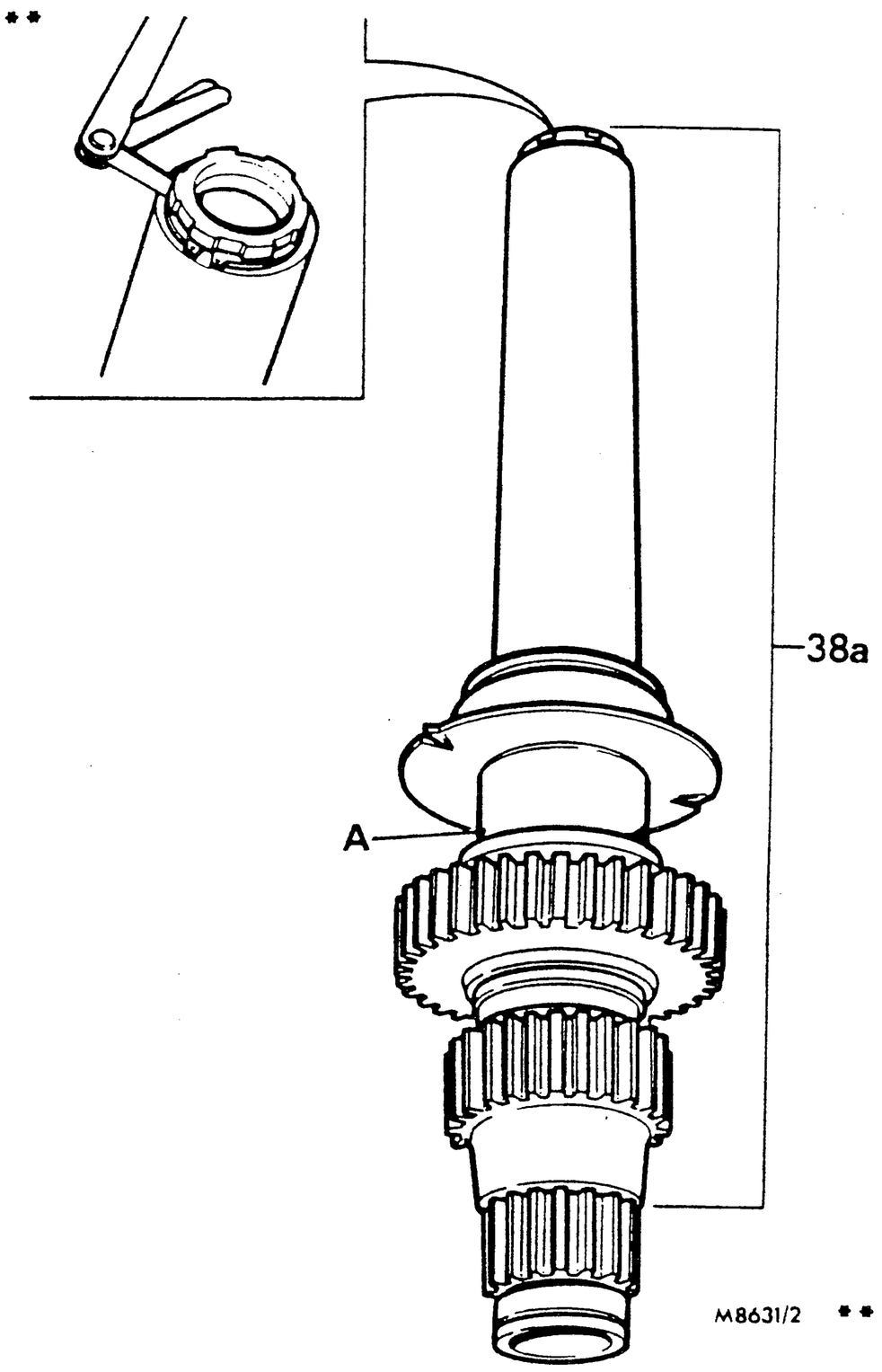

**

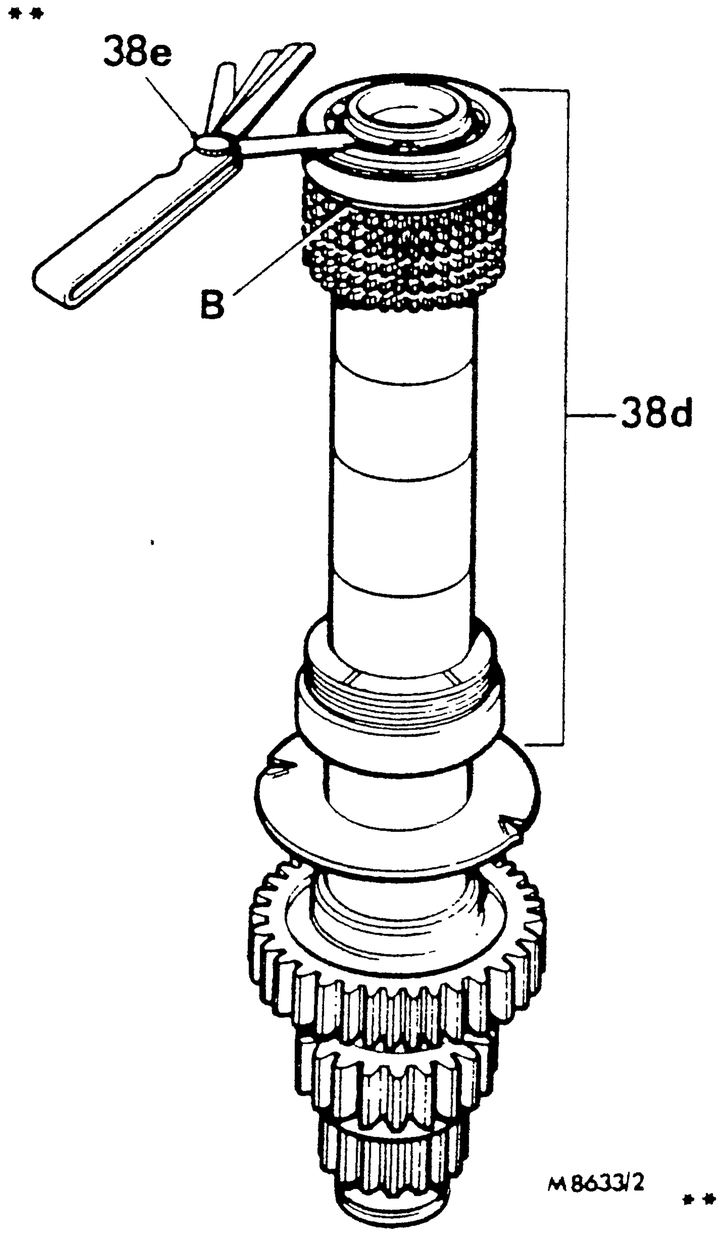

https://tractormanualz.com/

51. If the mainshaft or any of the parts which fit onto it have to be replaced, a spacer to give the correct gear end-float must be selected as follows.

a. Onto mainshaft fit the rear bearing inner race, smallest selective spacer, two thrust washers and one spacer, bearing sleeve bush, bearing sleeve hub coupler, spacer high range gear, and tool LC 283.

NOTE: Ensure tool LC 283 will locate against face of counterbore of high range gear. Modify tool, if required, by chamfering outside diameter.

b. Tighten locknut until it just secures assembly. Measure resulting gap in assembly, choosing a spacer to give the end-float specified in DATA.

52. Remove the components, except rear bearing, from mainshaft and introduce mainshaft progressively from rear of box, building in the following order.
    a. Selected spacer and thrust washer with thrust face towards low gear.
    b. Bearing sleeve with low range gear.
    c. Bearing sleeve hub coupler with medium range gear and hub collar.
    d. Thrust washer and spacer with thrust face towards medium range gear.
    e. Large spacer and high range gear.
53. Drive mainshaft fully forward and fit lock washer, washer and locknut, treated with locking compound specified in DATA. Lock mainshaft by selecting high and low gear. Tighten locknut to torque in DATA and bend over tab on lockwasher. Fit circlip behind rear mainshaft bearing outer race.
54. Position tool 18G 477 against inner face of differential housing bore and adjust the centre bearing locknuts using tool 18G 474 A until the ground face of pinion just touches the gauge peg with both locknuts tightened to torque in DATA.
55. Put selectors in neutral and check all gears rotate freely.

**NOTE: Mainshaft will be tight due to pre-load on centre bearing.

56. Fit reverse idler gear assembly, thrust washers and shaft, ensuring O-ring is serviceable and secure shaft with bolt tightening to torque in DATA and sealing with compound quoted in DATA.
57. Fit bearing and circlip onto primary shaft and move synchro packs to select third and reverse gears.**
58. Refit primary shaft ensuring all gears mesh correctly and the rear bearing is not pushed from its bore. Fit circlip retaining bearing to primary shaft.
59. Put selectors in neutral and check all gears rotate freely.
60. Refit differential assembly and set backlash, see TB51.20.47.
61. Refit rear half axles. TB51.35.15.
62. Refit P.T.O. shaft and transfer gear assembly TB37.29.04 and TB37.29.06.
63. Refit gearbox top cover, see TB37.16.37, but not the gear and range change levers.

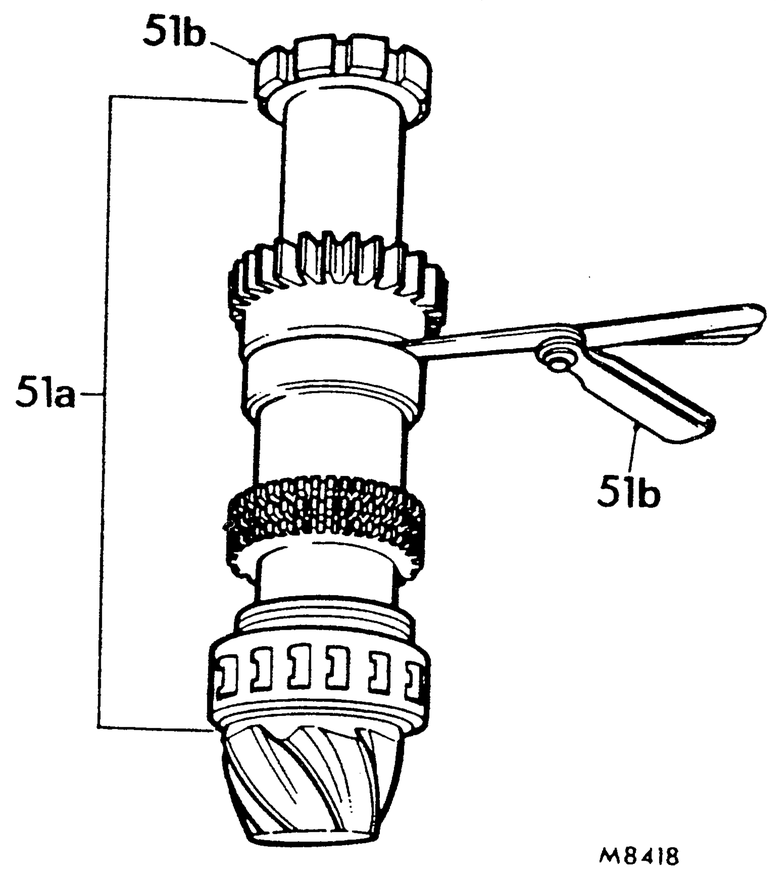

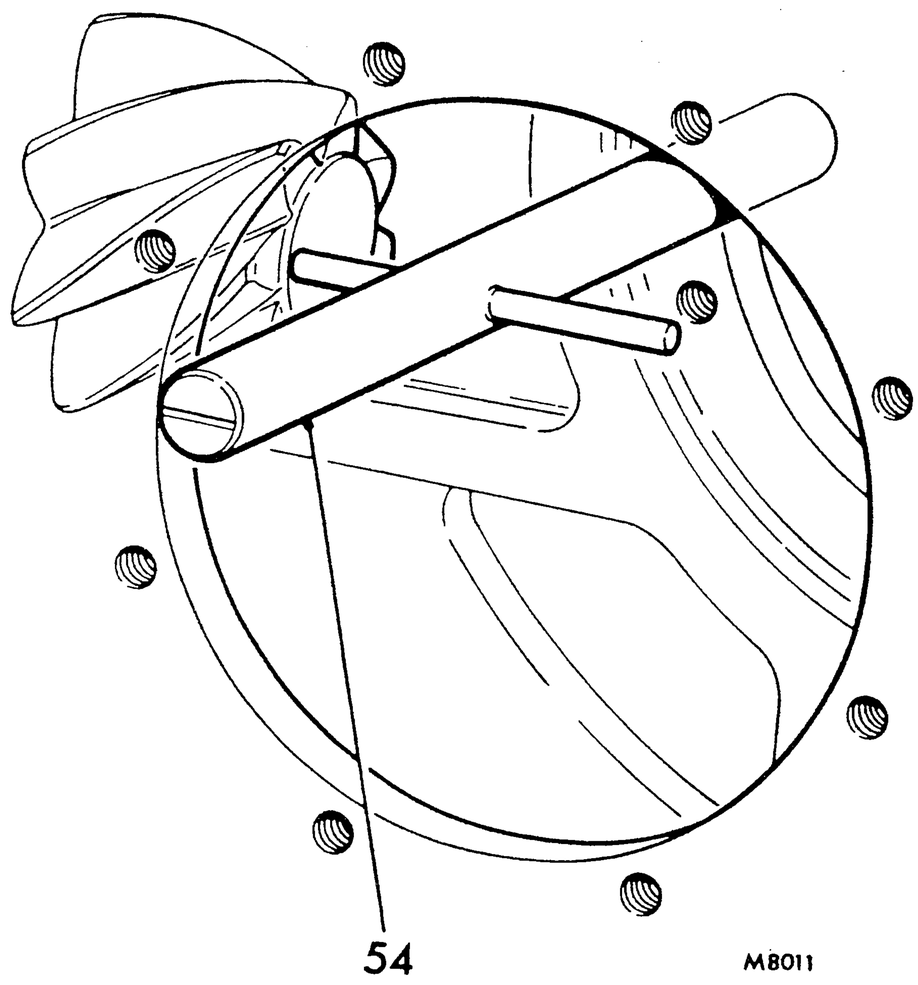

64. Refit drop box to gearbox, see TB37.12.04.
65. Re-connect clutch housing to gearbox case.
66. Follow clutch refitment to couple transmission and P.T.O. drive shafts. TB33.10.01.
67. Slide propeller shaft coupling onto drop box output shaft and secure. Refit propeller shaft guard.
68. Refit handbrake balance bar and support bracket to gearbox.
69. Refit hydraulic lift unit. TB53.15.01.
70. Refill transmission with oil.
71. Reconnect isolation switch and trailer socket.
72. Refit cab. TB76.10.01.
73. Refit P.T.O. connecting rod.
74. Reconnect brake rods at handbrake balance bar.

continued

https://tractormanualz.com/

**TRANSMISSION TESTS — ENGINE RUNNING

Check for tight bushes

1. **Synchro gears**
   a. Ensure change speed lever is in neutral.
   b. Engage low range gear and run engine up to 1000 rev/min with brakes off.

   Tractor should remain stationary with no change in rev/min.

   NOTE: If when carrying out tests 1 and 2 partial seizure has occurred, tractor will creep. If total seizure has occurred, tractor will move at a speed relative to the seized gear.

Movement test — to check operation
   a. Select any range gear.
   b. Select 1st or 2nd speed gear and whilst on the move select reverse gear. No noise should be heard.
   c. Road test the tractor to check operation in all gears.

2. **Constant mesh gears**
   a. Ensure range change lever is in neutral.
   b. Engage reverse gear and run engine up to 1000 rev/min with brakes off.

   Tractor should remain stationary with no change in rev/min.**

DATA

Gearbox mainshaft

Torque required to turn centre bearing:	
New bearings fitted	1,35 to 2,81 Nm (13,8 to 28,7 kgf cm, 12 to 25 lbf in). This torque is obtained if a pull of 24 to 49 N (2,5 to 5 kgf, 5.4 to 11.1 lbf) is recorded on the spring balance
Original bearings fitted	0,67 to 1,41 Nm (6,9 to 14,3 kgf cm, 6 to 12.5 lbf in). This torque is obtained if a pull of 12 to 24 N (1,25 to 2,5 kgf, 2.7 to 5.5 lbf) is recorded on the spring balance
Pinion setting dimension	30,16 mm (1.1875 in) between ground face of pinion and circumference of differential carrier bearing bore
End-float of mainshaft gears	0,127 to 0,254 mm (0.005 to 0.010 in)
End-float adjustment spacers available	3,55 mm (0.140 in) to 5,58 mm (0.220 in) in steps of 0,127 mm (0.005 in)

Gearbox layshaft

Selective spacer sleeve 'A':	
Required gap	0,000 to 0,254 mm (0.000 to 0.010 in)
** Adjustment spacer sleeves available	62,48 mm (2.46 in) to 64,52 mm (2.54 in) in steps of 0,25 mm (0.010 in)**
Selective spacer 'B':	
Required gap	0,000 to 0,254 mm (0.000 to 0.010 in)
Adjustment spacers available	2,34 mm (0.094 in) to 3,81 mm (0.150 in) in steps of 0,101 mm (0.004 in)
Selective spacer — high range gear	5,20 mm (0.205 in) to 5,91 mm (0.235 in) in steps of 0,127 mm (0.005 in)

Torque tightening figures

	Nm	kgf m	lbf ft
**Mainshaft locknut	245	25	180
NOTE: The correct torque is obtained by using tool LC 279 with a torque wrench set at 190 Nm (19,4 kgf m, 140 lbf ft)**			
Mainshaft bearing adjusting nuts	163	16,6	120
NOTE: The correct torque is obtained by using tool 18G 474 A with a torque wrench set to the figure stamped on the tool.			
Selector cover screws and nuts	37	3,7	27
Transfer housing to gearbox bolts	37	3,7	27
Transfer housing cover screws	20	2,1	15
** Reverse idler gear locking bolt	37	3,7	27**

Special lubricants and compounds

Mainshaft locknut locking compound	Loctite 222 (degrease threads before application)
Gearcase bearing block spacer plug	Loctite sealant
**Welch plug sealing compound	Hylomar
Reverse idler gear locking bolt sealing compound	Hylomar**

https://tractormanualz.com/

51. If the mainshaft or any of the parts which fit onto it have to be replaced, a spacer to give the correct gear end-float must be selected as follows.

a. Onto mainshaft fit the rear bearing inner race, smallest selective spacer, two thrust washers and one spacer, bearing sleeve bush, bearing sleeve hub coupler, spacer high range gear, and tool LC 283.

****NOTE:** Ensure tool LC 283 will locate against face of counterbore of high range gear. Modify tool, if required, by chamfering outside diameter**.

b. Tighten locknut until it just secures assembly. Measure resulting gap in assembly, choosing a spacer to give the end-float specified in DATA.

52. Remove the components, except rear bearing, from mainshaft and introduce mainshaft progressively from rear of box, building in the following order.
    a. Selected spacer and thrust washer with thrust face towards low gear.
    b. Bearing sleeve with low range gear.
    c. Bearing sleeve hub coupler with medium range gear and hub collar.
    d. Thrust washer and spacer with thrust face towards medium range gear.

e. Large spacer and high range gear.

53. Drive mainshaft fully forward and fit lock washer, washer and locknut, treated with locking compound specified in DATA. Lock mainshaft by selecting high and low gear. Tighten locknut to torque in DATA and bend over tab on lockwasher. Fit circlip behind rear mainshaft bearing outer race.
54. Position tool 18G 477 against inner face of differential housing bore and adjust the centre bearing locknuts using tool 18G 474 A until the ground face of pinion just touches the gauge peg with both locknuts tightened to torque in DATA.
55. Put selectors in neutral and check all gears rotate freely.

****NOTE:** Mainshaft will be tight due to pre-load on centre bearing.

56. Fit reverse idler gear assembly, thrust washers and shaft, ensuring O-ring is serviceable and secure shaft with bolt tightening to torque in DATA and sealing with compound quoted in DATA.
57. Fit bearing and circlip onto primary shaft and move synchro packs to select third and reverse gears.**
58. Refit primary shaft ensuring all gears mesh correctly and the rear bearing is not pushed from its bore. Fit circlip retaining bearing to primary shaft.
59. Put selectors in neutral and check all gears rotate freely.
60. Refit differential assembly and set backlash, see TB51.20.47.
61. Refit rear half axles. TB51.35.15.
62. Refit P.T.O. shaft and transfer gear assembly TB37.29.04 and TB37.29.06.
63. Refit gearbox top cover, see TB37.16.37, but not the gear and range change levers.

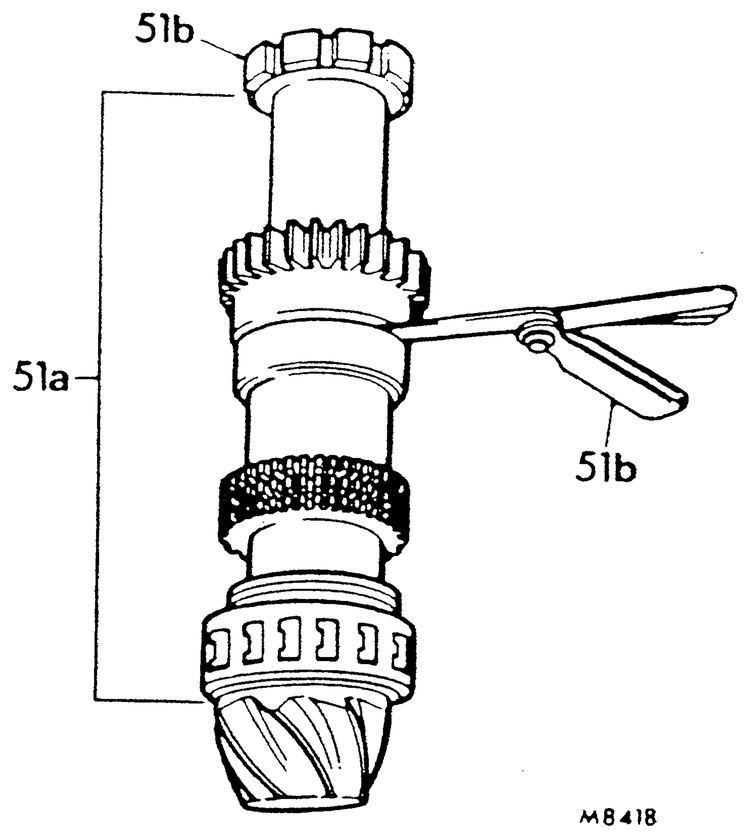

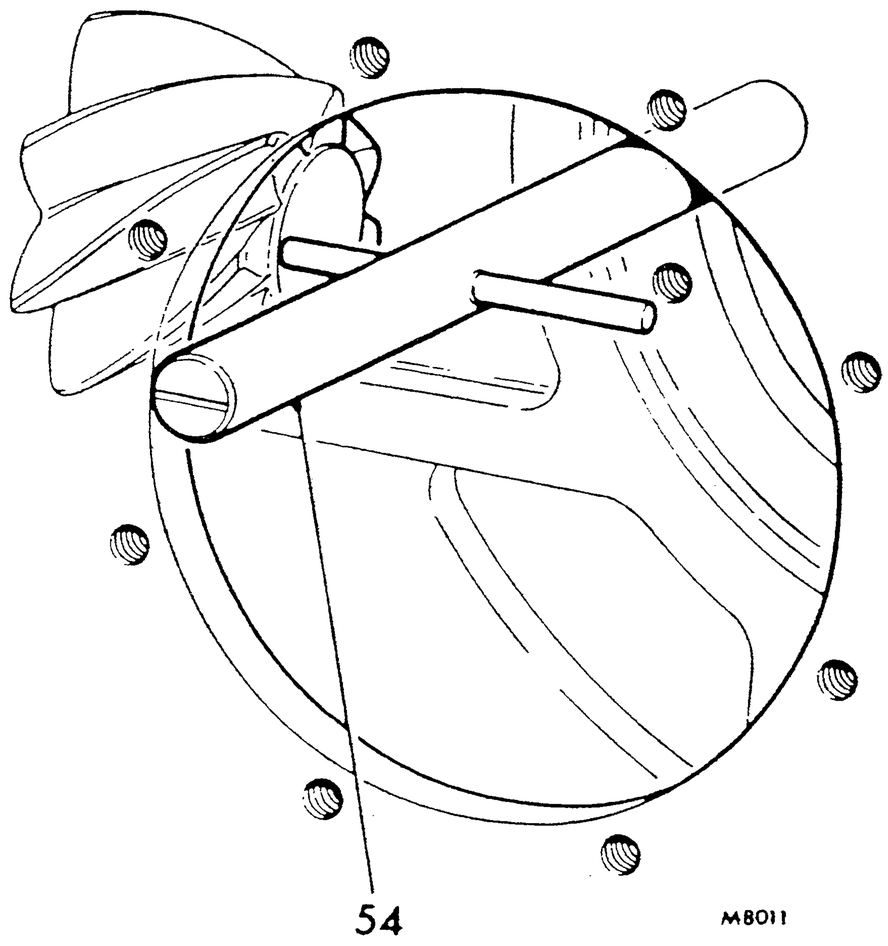

64. Refit drop box to gearbox, see TB37.12.04.
65. Re-connect clutch housing to gearbox case.
66. Follow clutch refitment to couple transmission and P.T.O. drive shafts. TB33.10.01.
67. Slide propeller shaft coupling onto drop box output shaft and secure. Refit propeller shaft guard.
68. Refit handbrake balance bar and support bracket to gearbox.
69. Refit hydraulic lift unit. TB53.15.01.
70. Refill transmission with oil.
71. Reconnect isolation switch and trailer socket.
72. Refit cab. TB76.10.01.
73. Refit P.T.O. connecting rod.
74. Reconnect brake rods at handbrake balance bar.

continued

https://tractormanualz.com/

**TRANSMISSION TESTS — ENGINE RUNNING

Check for tight bushes

1. **Synchro gears**
   a. Ensure change speed lever is in neutral.
   b. Engage low range gear and run engine up to 1000 rev/min with brakes off.

   Tractor should remain stationary with no change in rev/min.

   NOTE: If when carrying out tests 1 and 2 partial seizure has occurred, tractor will creep. If total seizure has occurred, tractor will move at a speed relative to the seized gear.

Movement test — to check operation
   a. Select any range gear.
   b. Select 1st or 2nd speed gear and whilst on the move select reverse gear. No noise should be heard.
   c. Road test the tractor to check operation in all gears.

2. **Constant mesh gears**
   a. Ensure range change lever is in neutral.
   b. Engage reverse gear and run engine up to 1000 rev/min with brakes off.

   Tractor should remain stationary with no change in rev/min.**

DATA

Gearbox mainshaft

Torque required to turn centre bearing:	
New bearings fitted	1,35 to 2,81 Nm (13,8 to 28,7 kgf cm, 12 to 25 lbf in). This torque is obtained if a pull of 24 to 49 N (2,5 to 5 kgf, 5.4 to 11.1 lbf) is recorded on the spring balance
Original bearings fitted	0,67 to 1,41 Nm (6,9 to 14,3 kgf cm, 6 to 12.5 lbf in). This torque is obtained if a pull of 12 to 24 N (1,25 to 2,5 kgf, 2.7 to 5.5 lbf) is recorded on the spring balance
Pinion setting dimension	30,16 mm (1.1875 in) between ground face of pinion and circumference of differential carrier bearing bore
End-float of mainshaft gears	0,127 to 0,254 mm (0.005 to 0.010 in)
End-float adjustment spacers available	3,55 mm (0.140 in) to 5,58 mm (0.220 in) in steps of 0,127 mm (0.005 in)

Gearbox layshaft

Selective spacer sleeve 'A':	
Required gap	0,000 to 0,254 mm (0.000 to 0.010 in)
**Adjustment spacer sleeves available	62,48 mm (2.46 in) to 64,52 mm (2.54 in) in steps of 0,25 mm (0.010 in)**
Selective spacer 'B':	
Required gap	0,000 to 0,254 mm (0.000 to 0.010 in)
Adjustment spacers available	2,34 mm (0.094 in) to 3,81 mm (0.150 in) in steps of 0,101 mm (0.004 in)
Selective spacer — high range gear	5,20 mm (0.205 in) to 5,91 mm (0.235 in) in steps of 0,127 mm (0.005 in)

Torque tightening figures	Nm	kgf m	lbf ft
**Mainshaft locknut	245	25	180
NOTE: The correct torque is obtained by using tool LC 279 with a torque wrench set at 190 Nm (19,4 kgf m, 140 lbf ft)**			
Mainshaft bearing adjusting nuts	163	16,6	120
NOTE: The correct torque is obtained by using tool 18G 474 A with a torque wrench set to the figure stamped on the tool.			
Selector cover screws and nuts	37	3,7	27
Transfer housing to gearbox bolts	37	3,7	27
Transfer housing cover screws	20	2,1	15
** Reverse idler gear locking bolt	37	3,7	27**

Special lubricants and compounds	
Mainshaft locknut locking compound	Loctite 222 (degrease threads before application)
Gearcase bearing block spacer plug	Loctite sealant
**Welch plug sealing compound	Hylomar
Reverse idler gear locking bolt sealing compound	Hylomar**

https://tractormanualz.com/

Refitting

11. Refit the differential assembly into the transmission case.
12. Refit the carrier bearings in their housings.
    NOTE: The procedure in operations 13 to 21 assumes that new differential carrier bearings are being fitted. If the original bearings are being refitted, the shim pack should be the total thickness of the shim packs noted in removal and should give a pre-load of almost zero.
13. Refit left-hand bearing housing without shims and secure with four bolts equally spaced screwed in finger-tight.
14. Refit right-hand bearing housing without shims and secure with four bolts equally spaced screwed in finger-tight.
15. Tighten the four left-hand bearing housing bolts, and then rotate the differential to ensure that the bearings are correctly fitted in their housings.
16. Tighten the four right-hand bearing housing bolts.
17. Fully slacken the right-hand bearing housing bolts.
18. Measure the gap between the bearing housing and casing accurately at four equally spaced positions around the bearing housing.
19. Remove the right-hand bearing housing complete with the bearing.
20. Fit shims to the bearing housing 0,076 mm (0.003 in) less than the average gap measured in procedure 18.
21. Refit the right-hand bearing housing and shims.
22. Remove the gearbox top cover. TB37.16.37.
23. Lock up two gears in the gearbox to prevent the transmission turning.
24. Take a crown wheel backlash reading.
25. Repeat procedures 23 and 24 and take a further three readings equally spaced and determine the average reading.

    ****NOTE:** If any individual backlash reading is in excess of 0,7 mm (0.028 in), reset the mainshaft, see TB37.20.04 operation 54. Do not use tool 18G 474 A, set the pinion so that no individual backlash reading is in excess of the above figure than repeat operations 23, 24 and 25.****
26. Subtract 0,33 mm (0.013 in) (which is the maximum backlash) from the average backlash figure determined in procedure 25.
27. Divide the result of procedure 26 by 3 and then multiply by 5. This gives the thickness of shims to be transferred from the right-hand bearing housing to the left-hand bearing housing.
28. Remove bearing housings, transfer correct thickness of shims, refit bearing housings, then tighten and wire lock bolts.
29. Adjust the trough of the oil catcher to maintain a clearance between the rear scoop and the crown wheel of 0,05 to 0,07 mm (0.002 to 0.003 in).
30. Refit hydraulic lift unit. TB53.15.01.
31. Refit rear half axle assemblies. TB51.35.14.

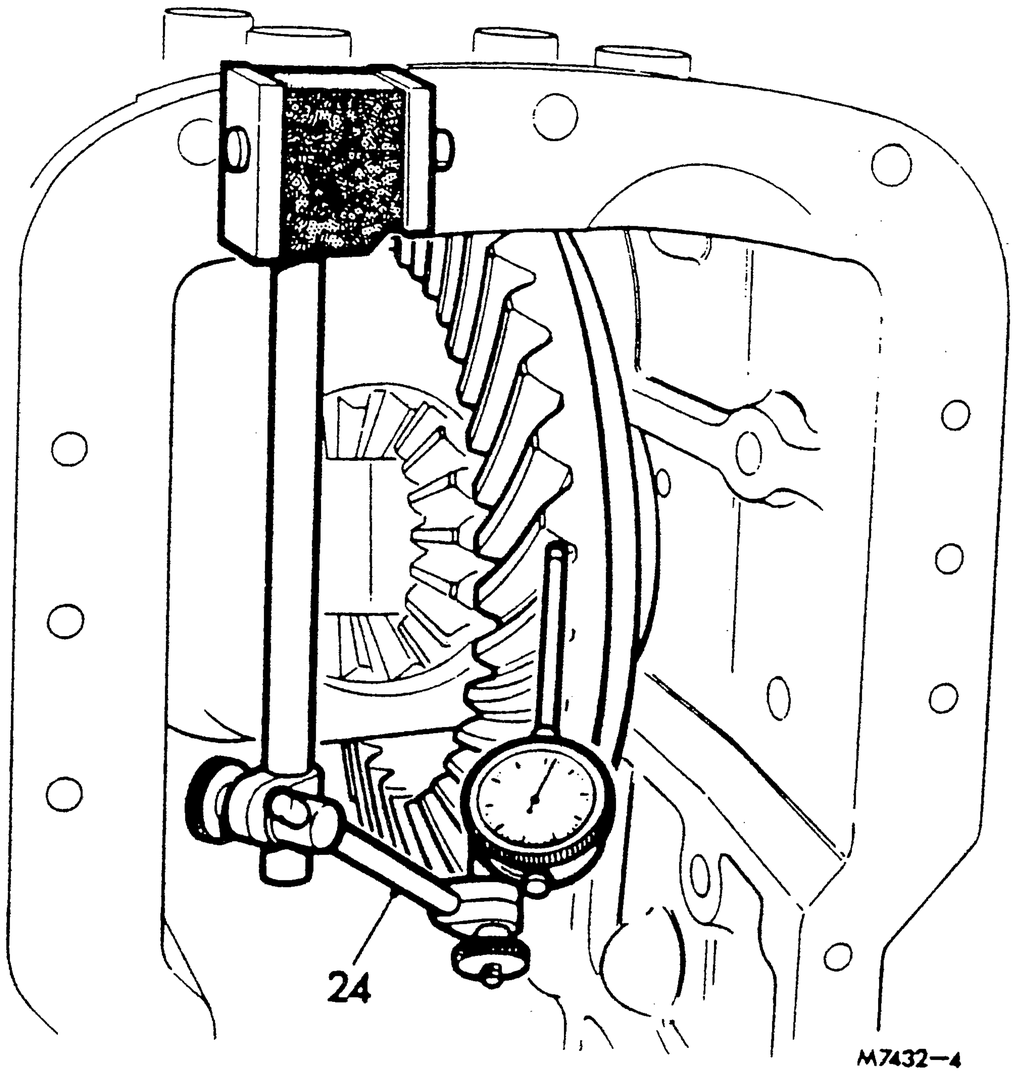

**DIFFERENTIAL HOUSING ASSEMBLY – ALL MODELS

—Overhaul **TB51.20.46**

Service tool: 18G 1007

Dismantling

1. Remove assembly from transmission. TB51.20.45.
2. Remove the eight nuts securing crown wheel to differential, drift out the bolts and lift off the crown wheel.
   NOTE: The crown wheel should only be removed if damage is evident in which case the pinion/mainshaft must also be renewed.
3. Remove pinion/mainshaft assembly if necessary. TB51.20.48.
4. Remove pinion shaft locking pin and press out the pinion shaft.
5. Remove pinions and thrust washers.
6. Remove differential gears and thrust washers.**

https://tractormanualz.com/

DIFFERENTIAL

—Remove and refit **TB51.20.45**

Removing

1. Remove rear half axle assemblies. TB51.35.14.
2. Remove hydraulic lift unit. TB53.15.01.
3. Remove the nuts securing the hydraulic filter to the brackets and push the filter forwards.
4. Remove the hydraulic power unit oil filter support brackets and withdraw the filter.
5. Support the differential assembly with a wooden block.
6. Remove the oil catcher from its bracket.
7. Mark the carrier bearing 'Left' or 'Right' relative to the transmission case for correct reassembly, and note the position of recesses in the right-hand bearing housing to give clearance for the differential lock fork.

   ****NOTE:** On later models a pinion support bearing is fitted in the L.H. side differential carrier housing.**
8. Remove the carrier bearing housing retaining bolts, and using two bolts as extractors draw off the bearing housing. Remove the shims and keep with their respective bearing housing, unless new bearings are to be used.
9. Remove the bearings from the differential housing.
   NOTE: There are cut-away sections in the differential housing for the access of a drift.
10. Remove differential assembly.

continued

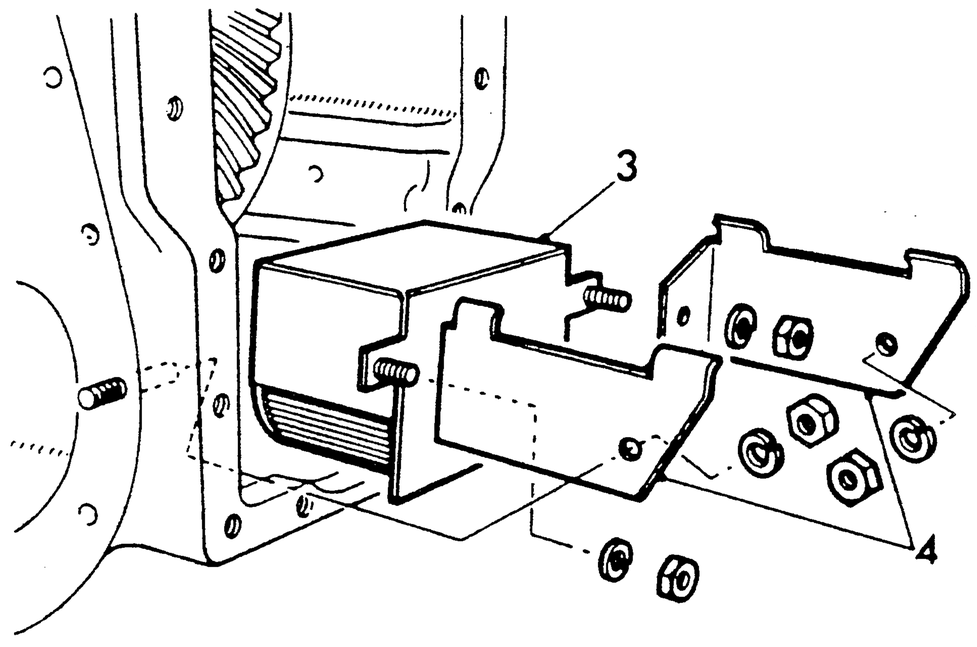

M7432—1

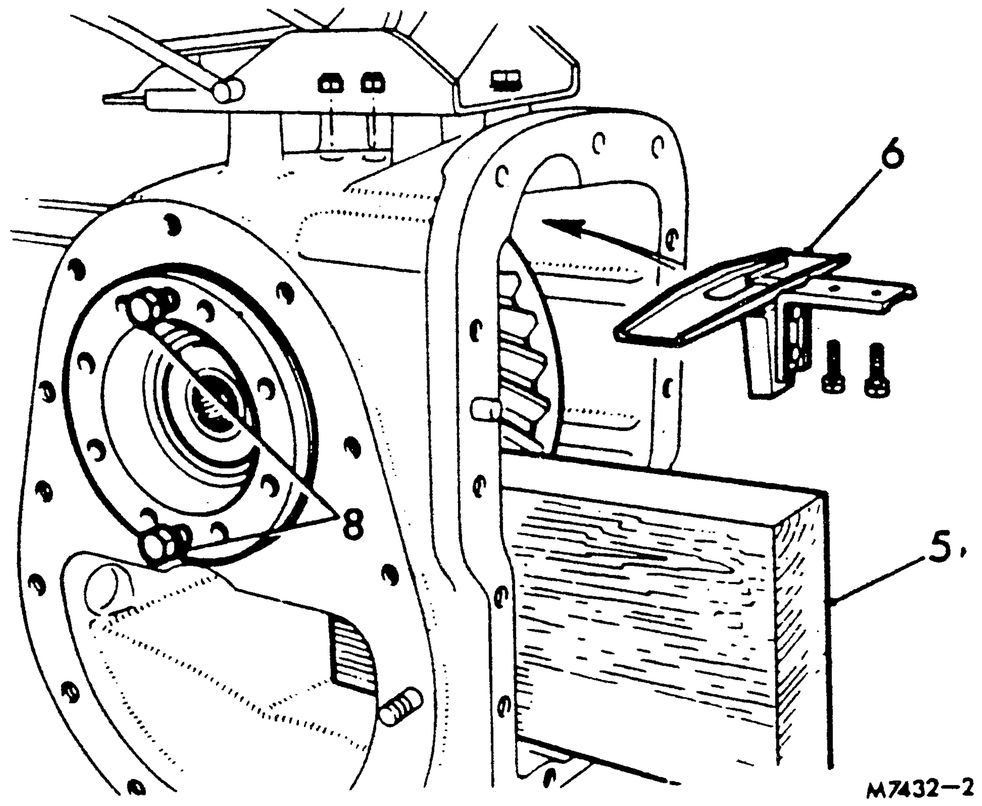

M7432—2

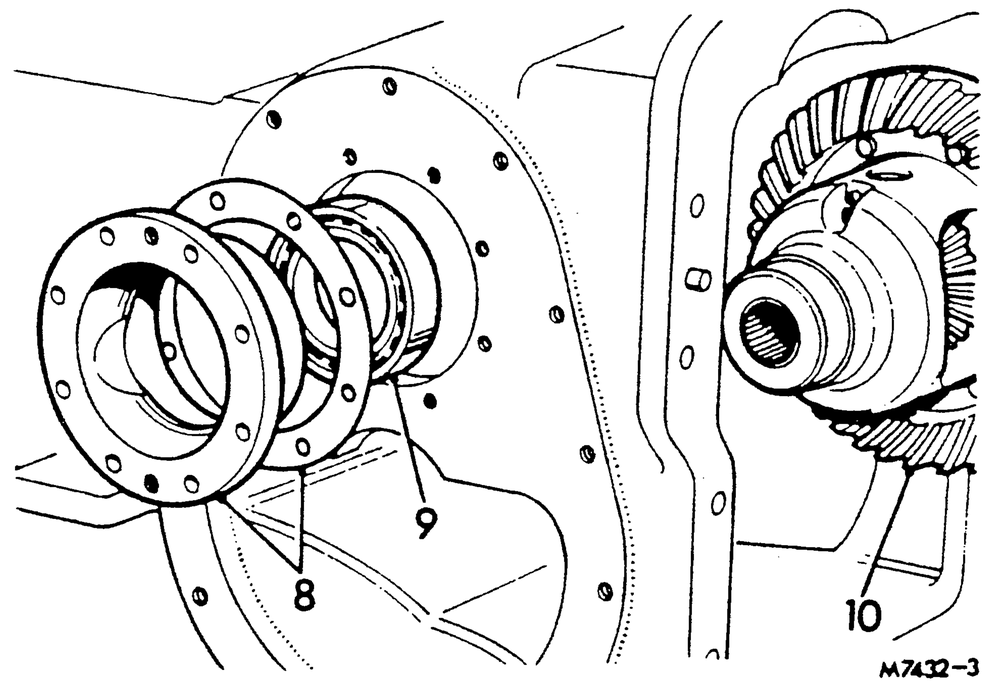

M7432—3

https://tractormanualz.com/

DIFFERENTIAL

—Remove and refit **TB51.20.45**

Removing

1. Remove rear half axle assemblies. TB51.35.14.
2. Remove hydraulic lift unit. TB53.15.01.
3. Remove the nuts securing the hydraulic filter to the brackets and push the filter forwards.
4. Remove the hydraulic power unit oil filter support brackets and withdraw the filter.
5. Support the differential assembly with a wooden block.
6. Remove the oil catcher from its bracket.
7. Mark the carrier bearing 'Left' or 'Right' relative to the transmission case for correct reassembly, and note the position of recesses in the right-hand bearing housing to give clearance for the differential lock fork.

   ****NOTE:** On later models a pinion support bearing is fitted in the L.H. side differential carrier housing.**
8. Remove the carrier bearing housing retaining bolts, and using two bolts as extractors draw off the bearing housing. Remove the shims and keep with their respective bearing housing, unless new bearings are to be used.
9. Remove the bearings from the differential housing.

   NOTE: There are cut-away sections in the differential housing for the access of a drift.
10. Remove differential assembly.

continued

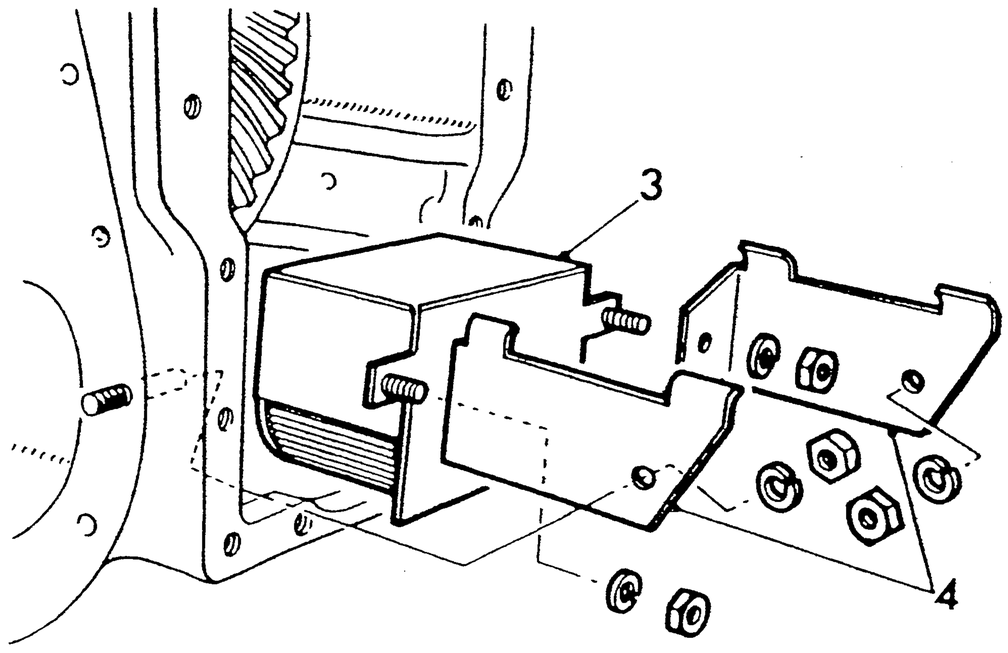

M7432—1

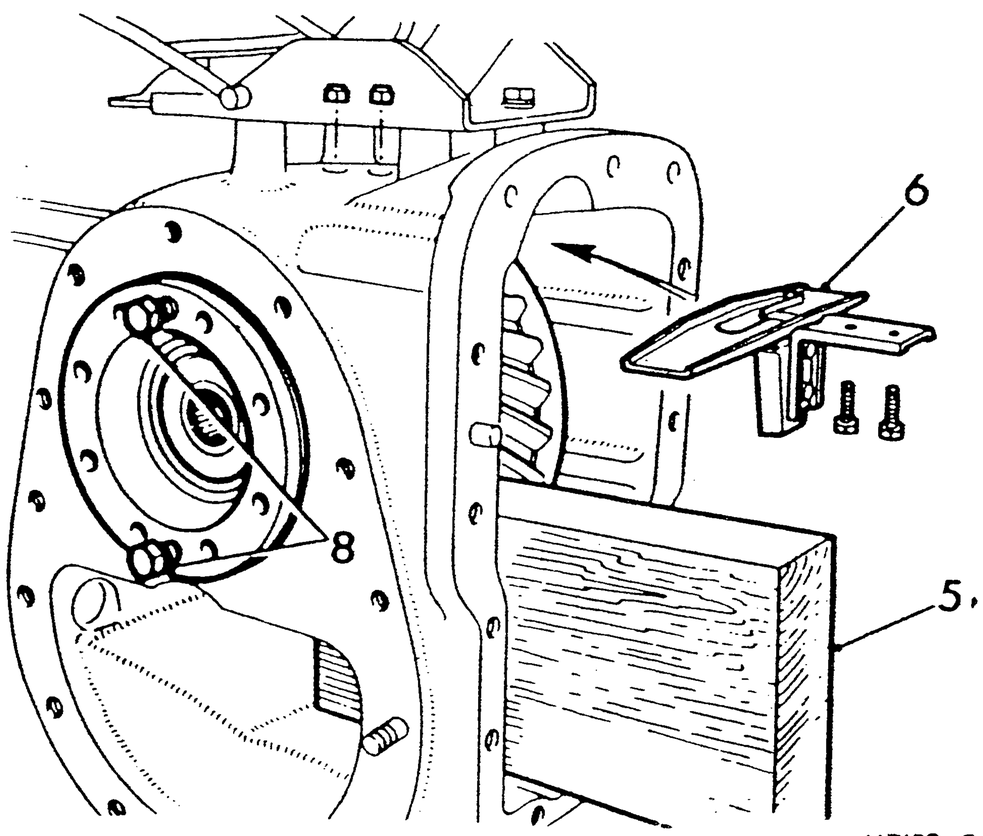

M7432—2

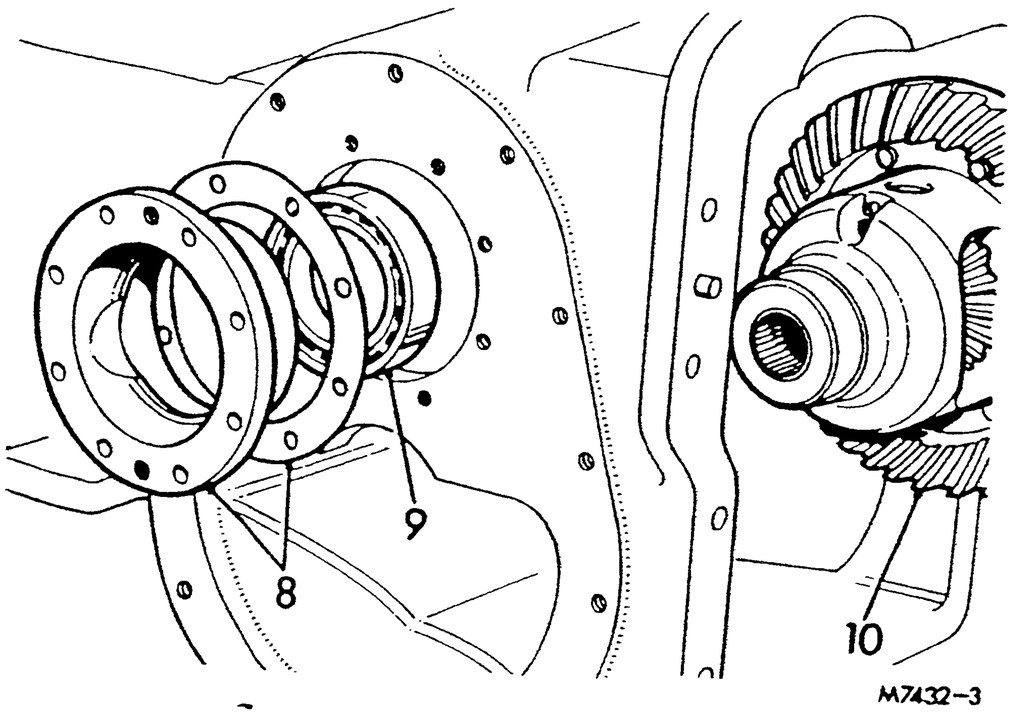

M7432—3

https://tractormanualz.com/

Refitting

11. Refit the differential assembly into the transmission case.
12. Refit the carrier bearings in their housings.
    NOTE: The procedure in operations 13 to 21 assumes that new differential carrier bearings are being fitted. If the original bearings are being refitted, the shim pack should be the total thickness of the shim packs noted in removal and should give a pre-load of almost zero.
13. Refit left-hand bearing housing without shims and secure with four bolts equally spaced screwed in finger-tight.
14. Refit right-hand bearing housing without shims and secure with four bolts equally spaced screwed in finger-tight.
15. Tighten the four left-hand bearing housing bolts, and then rotate the differential to ensure that the bearings are correctly fitted in their housings.
16. Tighten the four right-hand bearing housing bolts.
17. Fully slacken the right-hand bearing housing bolts.
18. Measure the gap between the bearing housing and casing accurately at four equally spaced positions around the bearing housing.
19. Remove the right-hand bearing housing complete with the bearing.
20. Fit shims to the bearing housing 0,076 mm (0.003 in) less than the average gap measured in procedure 18.
21. Refit the right-hand bearing housing and shims.
22. Remove the gearbox top cover. TB37.16.37.
23. Lock up two gears in the gearbox to prevent the transmission turning.
24. Take a crown wheel backlash reading.
25. Repeat procedures 23 and 24 and take a further three readings equally spaced and determine the average reading.

    ****NOTE:** If any individual backlash reading is in excess of 0,7 mm (0.028 in), reset the mainshaft, see TB37.20.04 operation 54. Do not use tool 18G 474 A, set the pinion so that no individual backlash reading is in excess of the above figure than repeat operations 23, 24 and 25.****
26. Subtract 0,33 mm (0.013 in) (which is the maximum backlash) from the average backlash figure determined in procedure 25.
27. Divide the result of procedure 26 by 3 and then multiply by 5. This gives the thickness of shims to be transferred from the right-hand bearing housing to the left-hand bearing housing.
28. Remove bearing housings, transfer correct thickness of shims, refit bearing housings, then tighten and wire lock bolts.
29. Adjust the trough of the oil catcher to maintain a clearance between the rear scoop and the crown wheel of 0,05 to 0,07 mm (0.002 to 0.003 in).
30. Refit hydraulic lift unit. TB53.15.01.
31. Refit rear half axle assemblies. TB51.35.14.

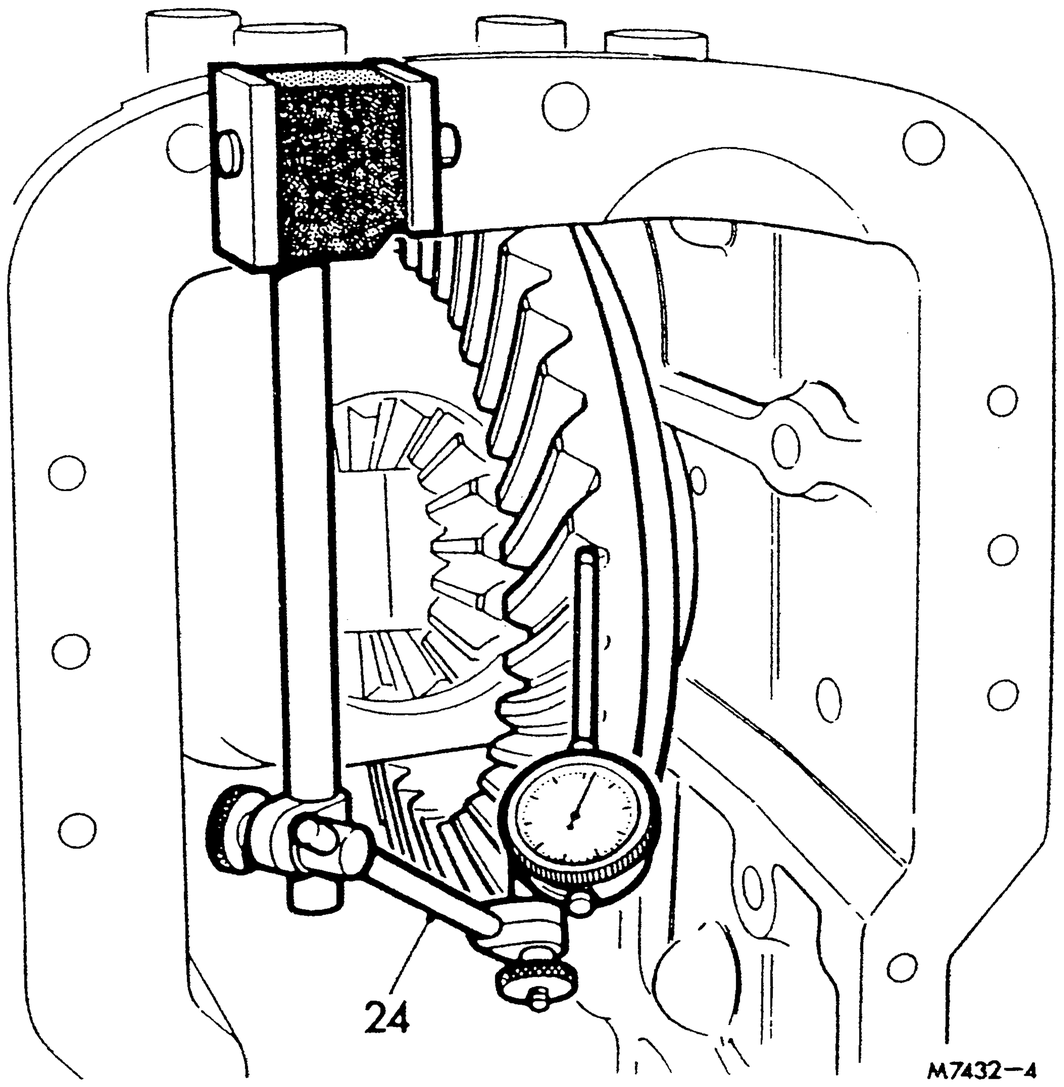

**DIFFERENTIAL HOUSING ASSEMBLY – ALL MODELS

–Overhaul **TB51.20.46**

Service tool: 18G 1007

Dismantling

1. Remove assembly from transmission. TB51.20.45.
2. Remove the eight nuts securing crown wheel to differential, drift out the bolts and lift off the crown wheel.
   NOTE: The crown wheel should only be removed if damage is evident in which case the pinion/mainshaft must also be renewed.
3. Remove pinion/mainshaft assembly if necessary. TB51.20.48.
4. Remove pinion shaft locking pin and press out the pinion shaft.
5. Remove pinions and thrust washers.
6. Remove differential gears and thrust washers.**

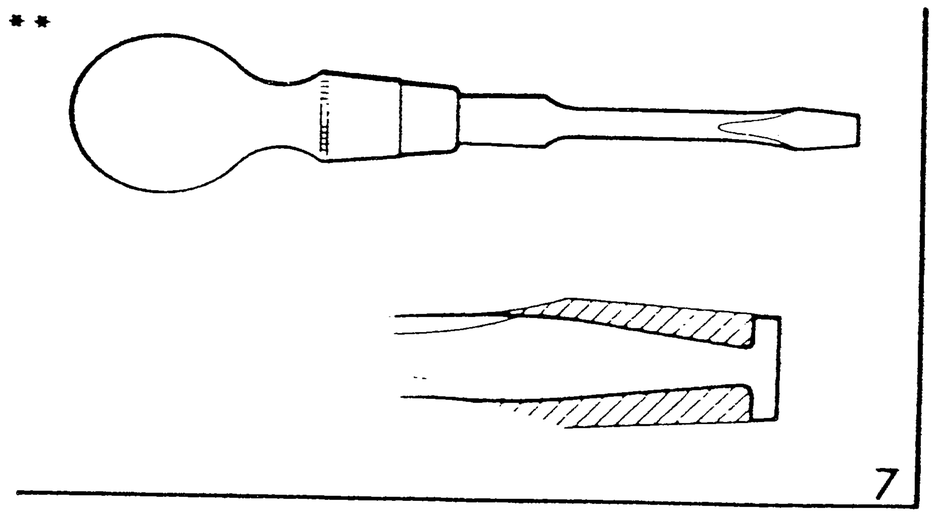

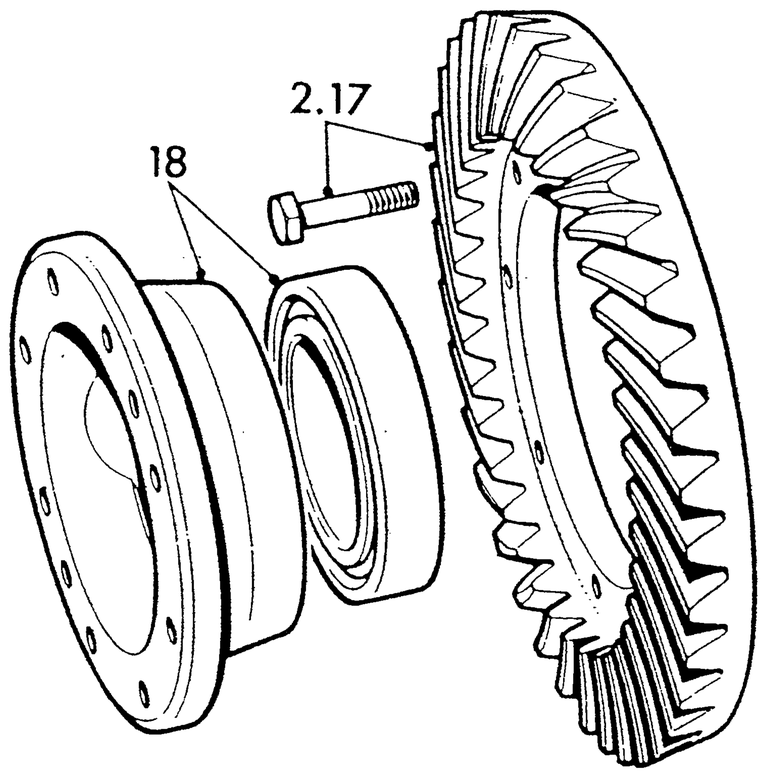

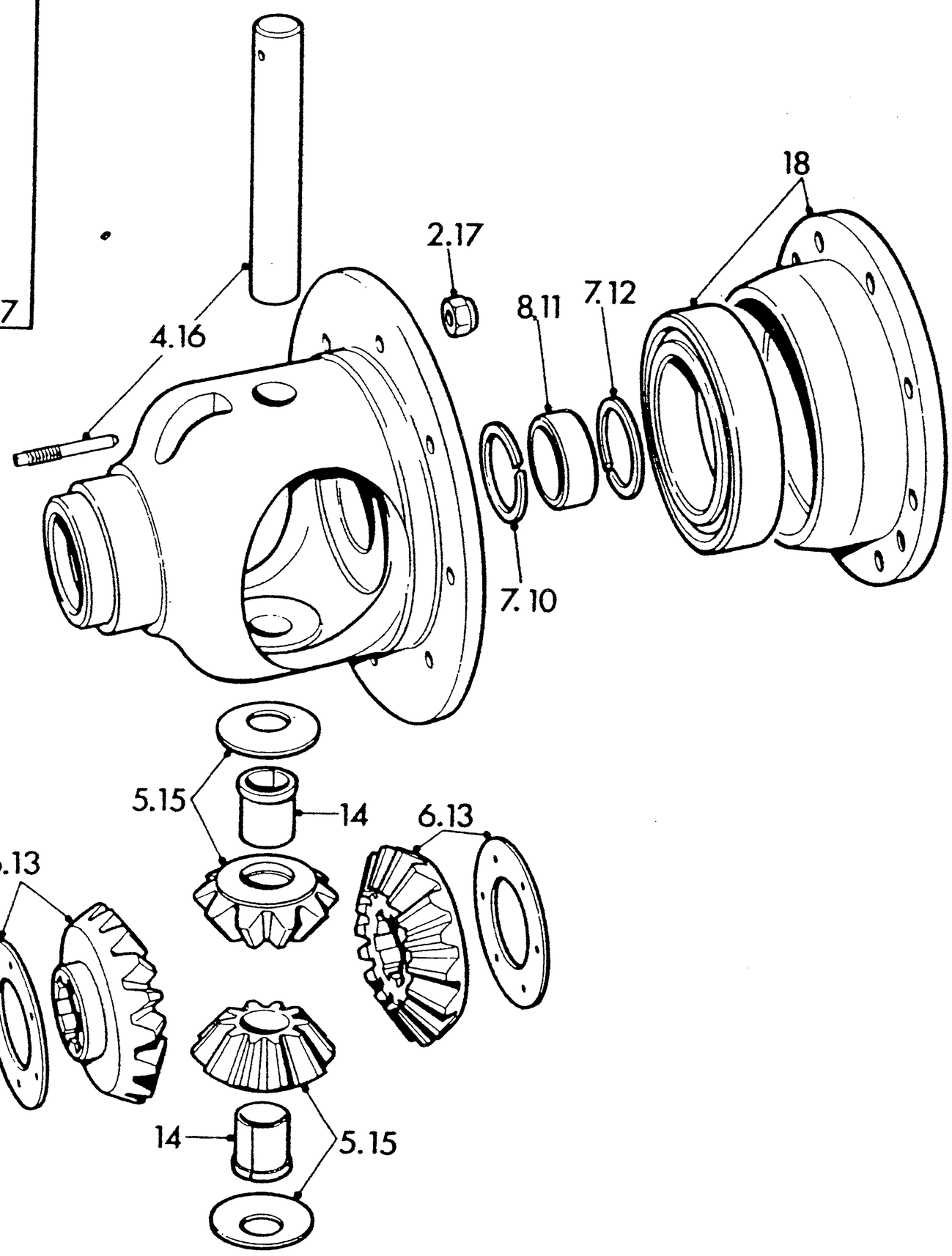

M 9066 **.

** 7. Manufacture a suitable tool from an old screwdriver and lever out the snap-rings securing the needle roller bearings or plain bush.
NOTE: Early tractors with the 5 X 2 gearbox have a needle roller bearing in each side of the differential housing, these being replaced in later models with the 5 X 2 gearbox by plain bushes. Tractors with synchro gearboxes have a plain bush which is fitted in the right-hand side of the differential housing, as shown in the illustration, the left-hand-side having a plain bore.

8. Drift or press out the needle roller bearings or bushes using tool 18G 1007.**

Inspecting

9. Clean all components and examine for wear.

Reassembling

**10. Fit inner snap-ring(s) in differential housing.
11. Press needle roller bearings or bush(es) in position against snap-ring(s), using tool 18G 1007.
12. Fit outer snap-ring(s).**
13. Fit differential gears and thrust washers.
14. Press new bushes into pinions.
15. Roll pinions with thrust washers into position in housing.
16. Fit pinion shaft and secure with locking pin and wire.
17. Position crown wheel and secure with eight bolts and nuts.
18. Press a bearing into each bearing housing.
19. Refit differential assembly. TB51.20.45.**

https://tractormanualz.com/

DIFFERENTIAL CARRIER BEARINGS – ALL MODELS

—Remove and refit TB51.20.47

Removing

1. Remove differential assembly. TB51.20.45.
2. Drift bearing outer races from housings.
3. Drift bearing inner races from differential.

Refitting

4. Reverse procedure 1 to 3.

DIFFERENTIAL CROWN WHEEL AND PINION — MODELS WITH 5 × 2 GEARBOX

—Overhaul TB51.20.48

Service tools: 18G 474, 18G 477, 18G 1139 A

Dismantling

1. Remove cab. TB76.10.01.
2. Remove clutch. TB33.10.01.
3. Remove half axles. TB51.35.14.
4. Remove differential assembly. TB51.20.45.
5. Overhaul differential assembly. TB51.20.46.
6. Remove high/low constant mesh gears but remove bearings only if inspection indicates they should be renewed. TB37.20.06.
7. Lock mainshaft by engaging two gears.
8. Bend back tab washer and release mainshaft locknut using tool 18G 1139; remove nut and washers.
9. Remove circlip from behind rear bearing and drive mainshaft rearwards out of casing, lifting out components as they are released.
10. Release lock-tabs from both centre bearing locknuts.
11. Slacken anti-rotation pin one half turn.
12. Unscrew centre bearing rear locknut, using tool 18G 474 and at the same time push the bearing assembly forward; remove locknut and lockwasher.
13. Remove centre bearing front locknut, lockwasher and anti-rotation pin.
14. Rotate bearing housing until anti-rotation slot aligns with top tooth of layshaft third speed gear.
15. Withdraw centre bearing assembly rearward.
16. If required remove locking screw, unscrew the bearing retaining nut and carefully remove the bearing from the housing.
17. Examine rear bearing and if required remove retaining circlip and drift outer race from casing.
18. Remove snap-ring and drift rear bearing inner race from mainshaft.

Reassembling

19. Fit centre bearing to housing, fit retaining nut and secure with locking wire.
    NOTE: If the tapped hole in retaining nut does not align with hole in housing a new hole must be drilled and tapped as specified in DATA.
20. Fit rear bearing outer race, if removed, and the front circlip.
21. Press rear bearing inner race onto mainshaft and fit circlip.
22. Position centre bearing in housing and fit lockwashers and locknuts but do not tighten.
23. Fit anti-rotation pin but do not tighten.
24. Insert mainshaft and feed on the 1st speed gear 2nd/3rd speed gear, spacer with its bore chamfer facing rearward, washers, locknut treated with locking compound specified in DATA and 4th/5th speed gear.
    NOTE: The arrangement of the washers and locknut on later tractors has been modified and earlier tractors should also be fitted with this modified arrangement. Ensure that the thick hardened steel washer is positioned against the bearing, not between the lockwasher and the locknut, and use the latest design of locknut, see Parts List.
25. Tighten mainshaft nut to torque in DATA, using tool 18G 1139 A, and lock with tab.

continued

https://tractormanualz.com/

DIFFERENTIAL CARRIER BEARINGS – ALL MODELS

–Remove and refit TB51.20.47

Removing

1. Remove differential assembly. TB51.20.45.
2. Drift bearing outer races from housings.
3. Drift bearing inner races from differential.

Refitting

4. Reverse procedure 1 to 3.

DIFFERENTIAL CROWN WHEEL AND PINION — MODELS WITH 5 × 2 GEARBOX

–Overhaul TB51.20.48

Service tools: 18G 474, 18G 477, 18G 1139 A

Dismantling

1. Remove cab. TB76.10.01.
2. Remove clutch. TB33.10.01.
3. Remove half axles. TB51.35.14.
4. Remove differential assembly. TB51.20.45.
5. Overhaul differential assembly. TB51.20.46.
6. Remove high/low constant mesh gears but remove bearings only if inspection indicates they should be renewed. TB37.20.06.
7. Lock mainshaft by engaging two gears.
8. Bend back tab washer and release mainshaft locknut using tool 18G 1139; remove nut and washers.
9. Remove circlip from behind rear bearing and drive mainshaft rearwards out of casing, lifting out components as they are released.
10. Release lock-tabs from both centre bearing locknuts.
11. Slacken anti-rotation pin one half turn.
12. Unscrew centre bearing rear locknut, using tool 18G 474 and at the same time push the bearing assembly forward; remove locknut and lockwasher.
13. Remove centre bearing front locknut, lockwasher and anti-rotation pin.
14. Rotate bearing housing until anti-rotation slot aligns with top tooth of layshaft third speed gear.
15. Withdraw centre bearing assembly rearward.
16. If required remove locking screw, unscrew the bearing retaining nut and carefully remove the bearing from the housing.
17. Examine rear bearing and if required remove retaining circlip and drift outer race from casing.
18. Remove snap-ring and drift rear bearing inner race from mainshaft.

Reassembling

19. Fit centre bearing to housing, fit retaining nut and secure with locking wire.
    NOTE: If the tapped hole in retaining nut does not align with hole in housing a new hole must be drilled and tapped as specified in DATA.
20. Fit rear bearing outer race, if removed, and the front circlip.
21. Press rear bearing inner race onto mainshaft and fit circlip.
22. Position centre bearing in housing and fit lockwashers and locknuts but do not tighten.
23. Fit anti-rotation pin but do not tighten.
24. Insert mainshaft and feed on the 1st speed gear 2nd/3rd speed gear, spacer with its bore chamfer facing rearward, washers, locknut treated with locking compound specified in DATA and 4th/5th speed gear.
    NOTE: The arrangement of the washers and locknut on later tractors has been modified and earlier tractors should also be fitted with this modified arrangement. Ensure that the thick hardened steel washer is positioned against the bearing, not between the lockwasher and the locknut, and use the latest design of locknut, see Parts List.
25. Tighten mainshaft nut to torque in DATA, using tool 18G 1139 A, and lock with tab.

continued

https://tractormanualz.com/

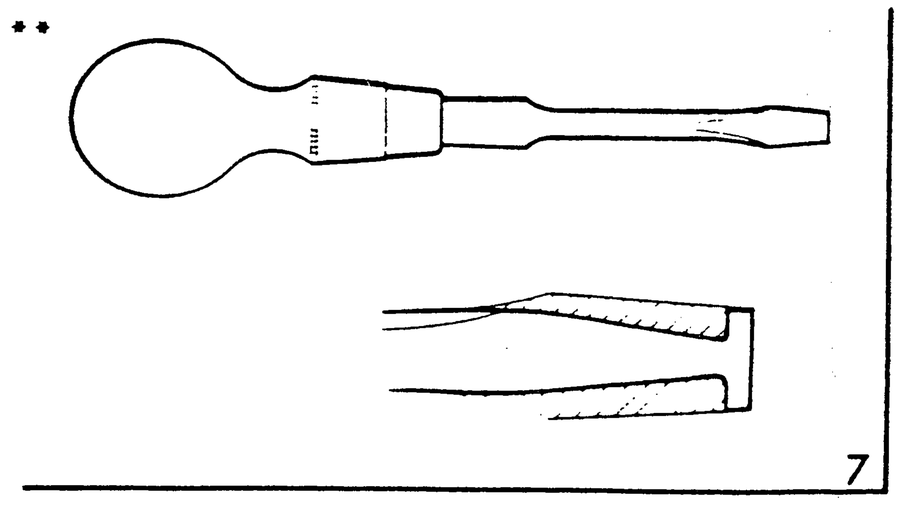

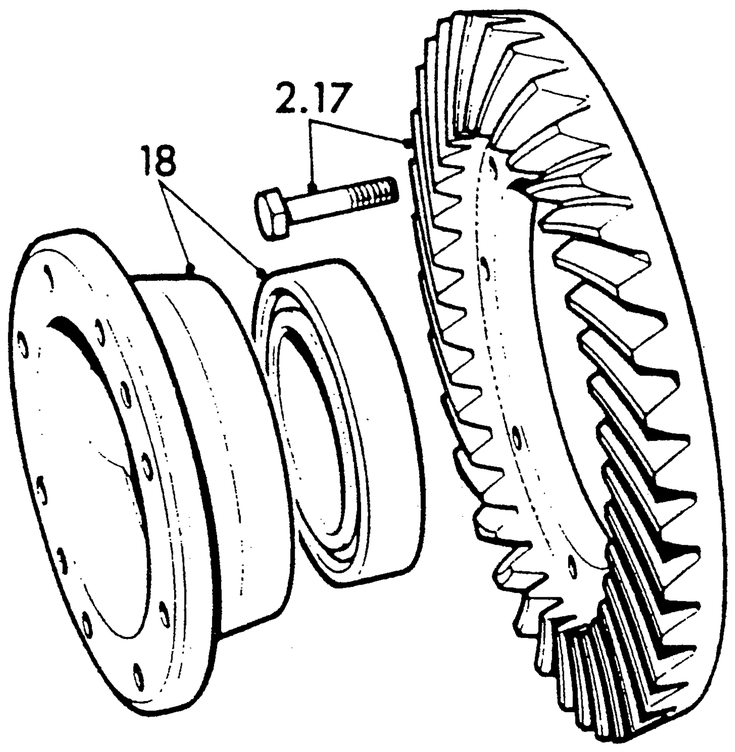

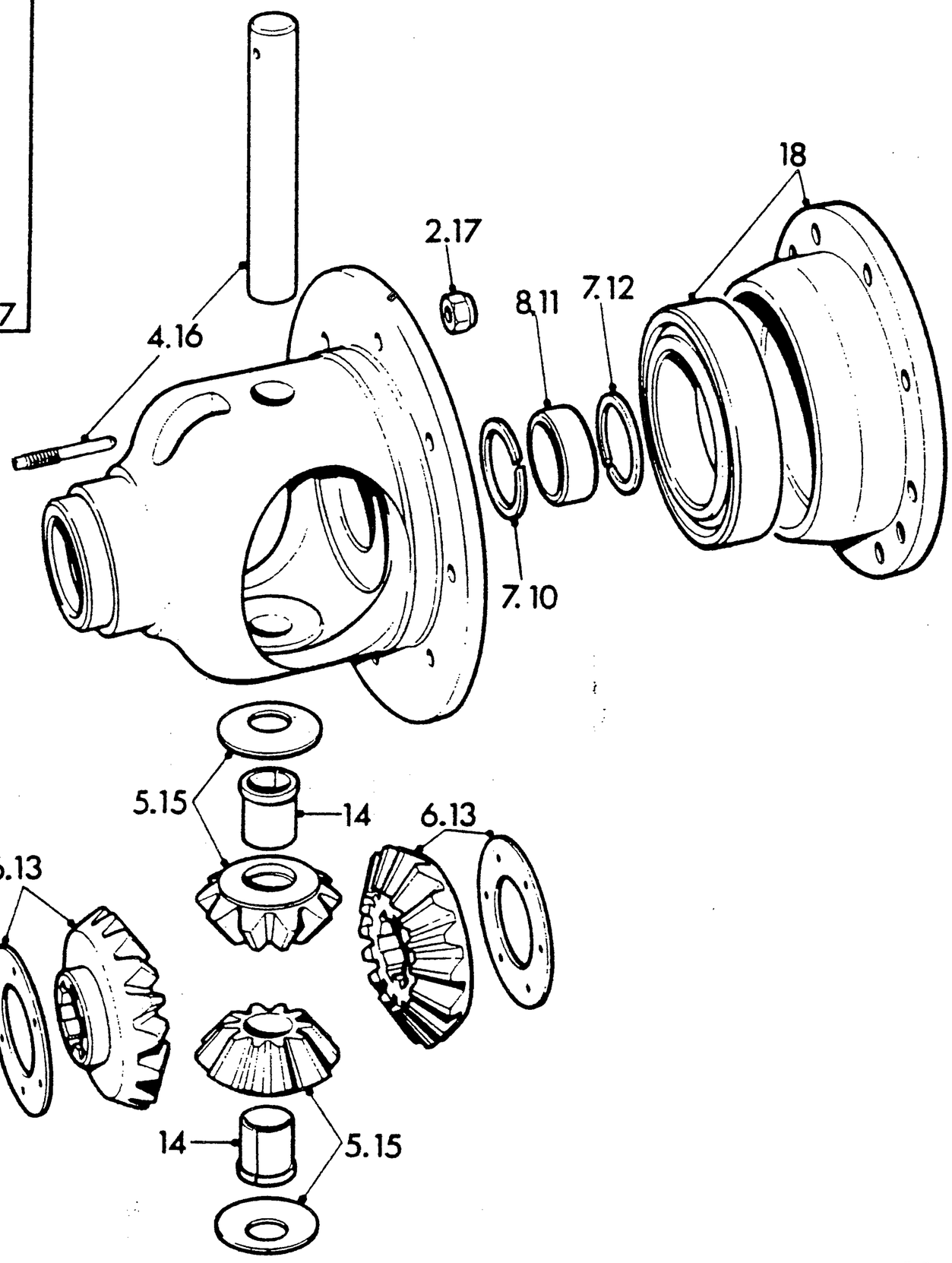

M 9066 **

** 7. Manufacture a suitable tool from an old screwdriver and lever out the snap-rings securing the needle roller bearings or plain bush.
NOTE: Early tractors with the 5 X 2 gearbox have a needle roller bearing in each side of the differential housing, these being replaced in later models with the 5 X 2 gearbox by plain bushes. Tractors with synchro gearboxes have a plain bush which is fitted in the right-hand side of the differential housing, as shown in the illustration, the left-hand-side having a plain bore.
8. Drift or press out the needle roller bearings or bushes using tool 18G 1007.**

Inspecting

9. Clean all components and examine for wear.

Reassembling

**10. Fit inner snap-ring(s) in differential housing.
11. Press needle roller bearings or bush(es) in position against snap-ring(s), using tool 18G 1007.
12. Fit outer snap-ring(s).**
13. Fit differential gears and thrust washers.
14. Press new bushes into pinions.
15. Roll pinions with thrust washers into position in housing.
16. Fit pinion shaft and secure with locking pin and wire.
17. Position crown wheel and secure with eight bolts and nuts.
18. Press a bearing into each bearing housing.
19. Refit differential assembly. TB51.20.45.**

https://tractormanualz.com/

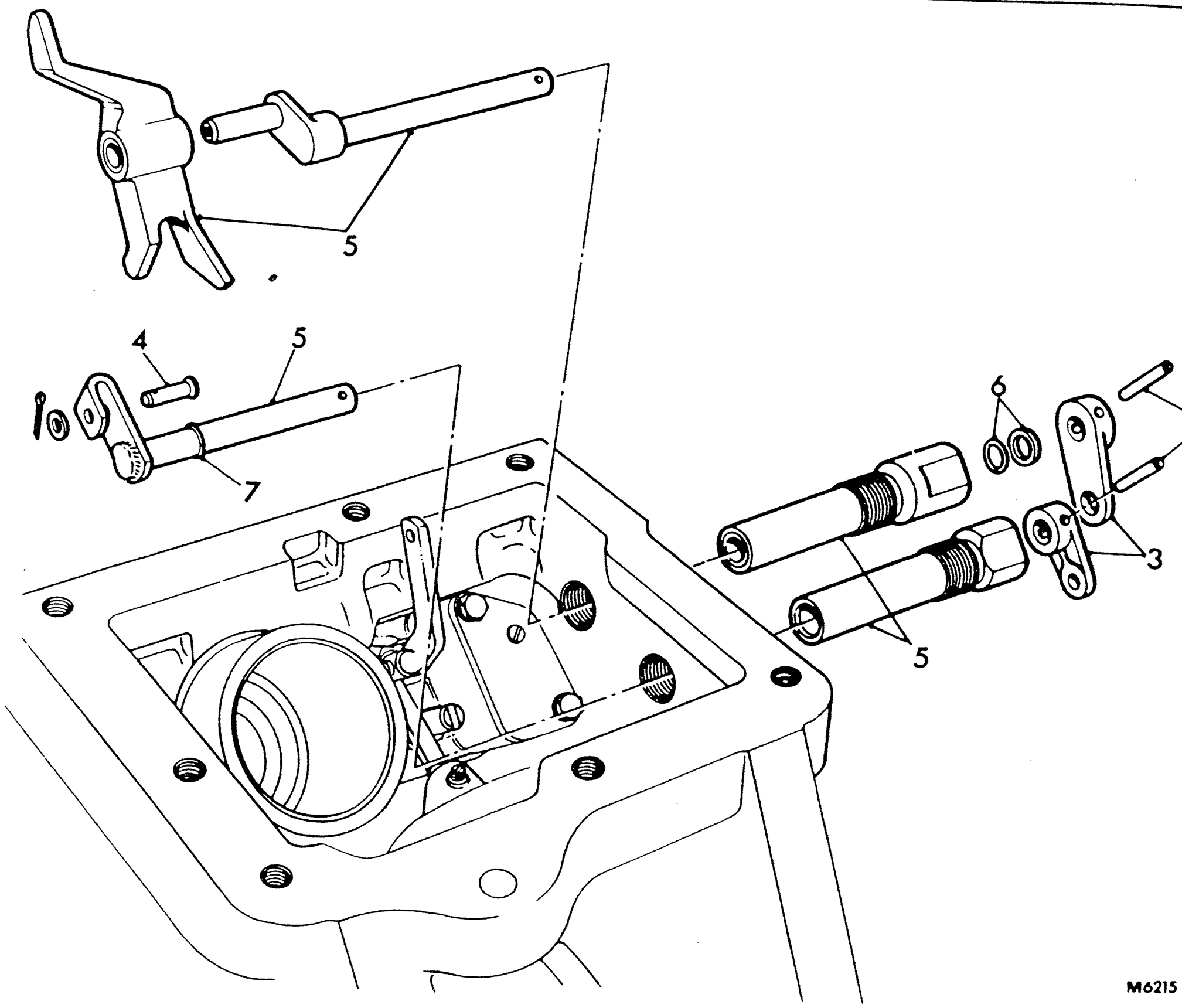

M6215

OPERATING SHAFTS AND MAIN LEVER —Overhaul TB53.30.09

Removing

1. Remove cross-shaft. TB53.15.06.
2. Remove clevis pins to disconnect control rods from operating levers.
3. Remove roll-pins and operating levers.
4. Remove clevis pin securing auxiliary link to shaft.
5. Unscrew bearing housing and remove housings, shafts and main lever.
6. Remove distance piece and O-ring seal from main shaft bearing housing.
7. Remove O-ring from auxiliary shaft.

Inspecting

8. Inspect shafts for bending, corrosion and wear; renew if required.
9. Inspect main lever and its bushes for wear and damage; renew as required.
10. Inspect position and draught control cams for damage, and renew as required (see TB53.15.07 and TB53.15.22).
    NOTE: The main lever should contact the middle of the position control cam; adjust cross-shaft as required.
11. Renew auxiliary shaft housing if its bore is worn or corroded.

Reassembling

12. Lubricate parts with clean hydraulic oil before assembly.
13. Reverse procedure in 1 to 7, ensuring all parts move freely.

https://tractormanualz.com/

NOTES

https://tractormanualz.com/

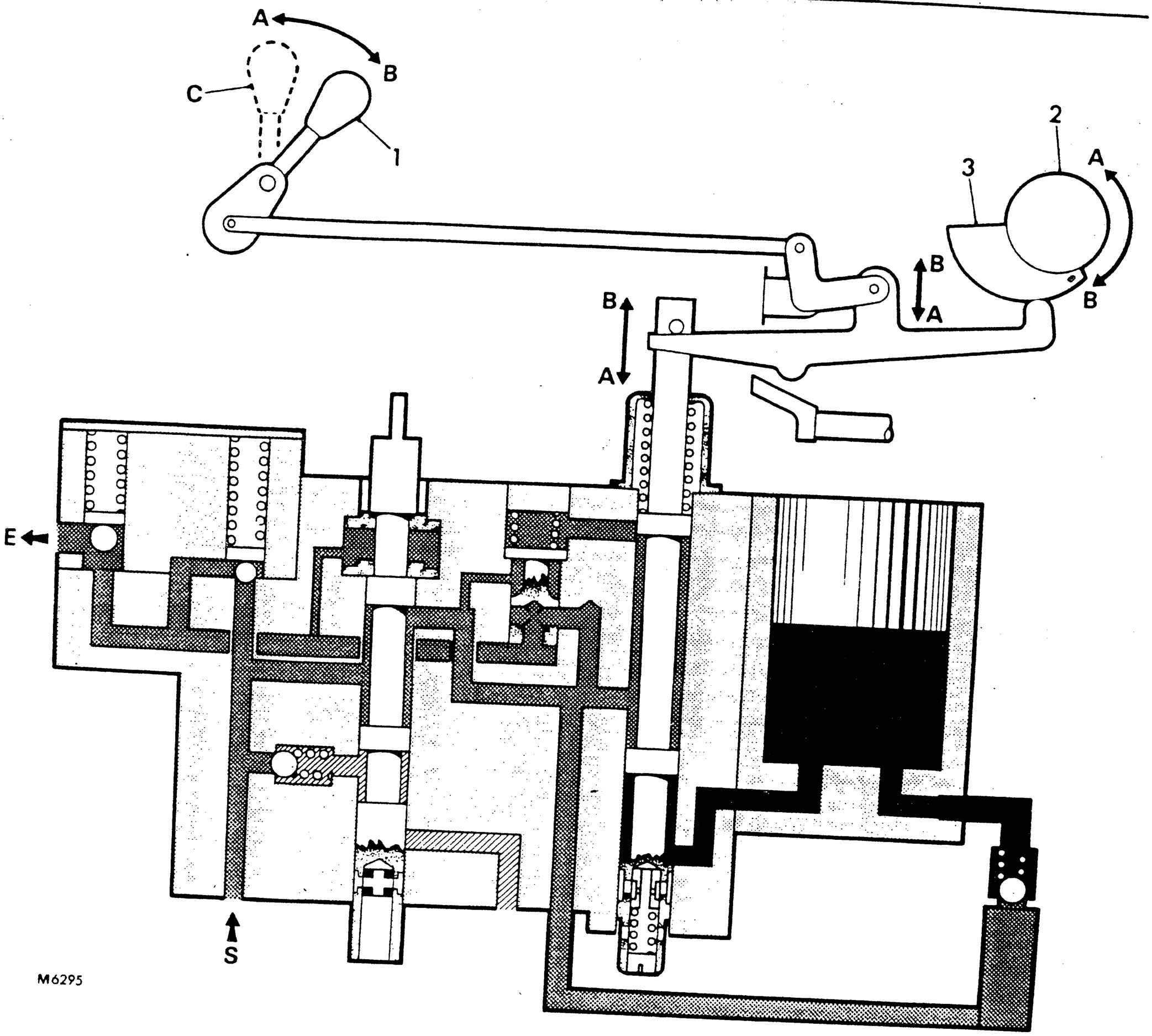

FLOW DIAGRAM – POSITION CONTROL

A. Lift
B. Lower
C. Full lift position

E. Exhaust
S. Supply

1. Hand lever
2. Cross-shaft
3. Position control cam

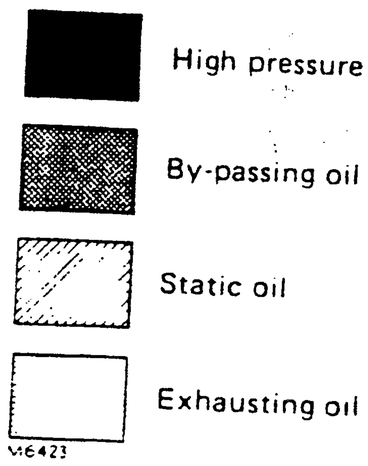

https://tractormanualz.com/

LIST OF OPERATIONS

Control mechanism
- — control lever and mounting box — remove and refit TB53.30.01
- — operating shafts and main lever assembly — remove and refit TB53.30.09

Fault finding charts TB53.00.10

Hydraulic pressure checks and adjustments
- — controls — adjust TB53.10.05
- — pressure — check TB53.10.01
- — pressure — check and adjust TB53.10.03

Pumps, valves and lift units
- — anchor bracket, Belleville washer pack — overhaul TB53.15.25
- ** — assistor cylinder — remove and refit TB53.15.40
- — assistor cylinder — overhaul TB53.15.41**
- — control valve assembly — overhaul TB53.15.16
- — control valve assembly — remove and refit TB53.15.15
- — cross-shaft assembly — overhaul TB53.15.07
- — cross-shaft assembly — remove and refit TB53.15.06
- — draught sensing mechanism — overhaul TB53.15.22
- ** — external services spool valve — remove and refit TB53.15.13
- — external services spool valve — overhaul TB53.15.14**
- — lift cylinder and piston overhaul TB53.15.12
- — lift cylinder piston rings — remove and refit TB53.15.11
- — lift unit — remove and refit TB53.15.01
- — pump — overhaul TB53.15.30
- — pump — remove and refit TB53.15.29
- — pump drive shaft — remove and refit TB53.15.31
- — relief valve assembly — overhaul TB53.15.19
- — unloader valve — fit new piston ring TB53.15.20

Supply tanks and filters
- — by-pass filter element — remove and refit TB53.20.10
- — hydraulic unit oil strainer — remove and refit TB53.20.02
- — valve chest to cylinder filter — non-return valve — remove and refit TB53.20.06
- — valve chest to cylinder filter complete — remove and refit TB53.20.04
- — valve chest to cylinder filter element — remove and refit TB53.20.05

System description and flow diagrams TB53.00.01

https://tractormanualz.com/

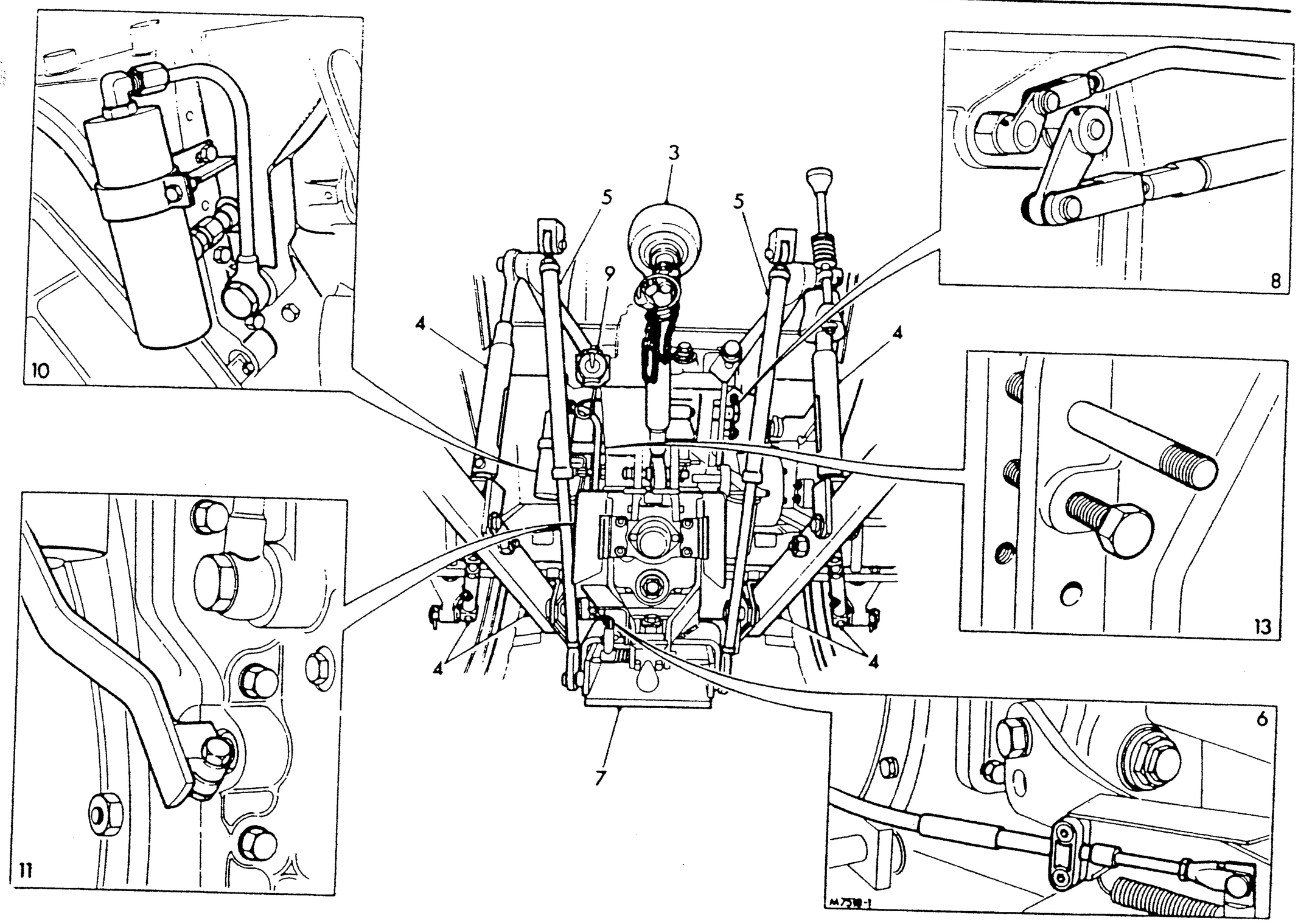

HYDRAULIC LIFT UNIT

—Remove and refit **TB53.15.01**

Removing

1. Remove side panel and disconnect earth lead from battery negative (—) terminal.
2. Drain transmission oil.
3. Remove top link.
4. Remove pins and detach lower link, stabiliser, lift-rod assemblies.
5. Detach pick-up hitch lift-rods if fitted, from lift-arms.
6. Disconnect pick-up hitch release cable if fitted, and remove clamp securing outer cable to bracket.
7. Position jack under drawbar frame, remove bolts securing drawbar to axle brackets and hydraulic lift unit, then lower and withdraw drawbar.
8. Remove clevis pins securing hydraulic control rods to operating levers.
9. Cut plastic tie securing cable and release trailer socket.
10. Position tray to catch oil and remove valve chest to cylinder filter complete with bracket and pipe.
11. Remove P.T.O. control lever from spline.
- **12. Remove bolts securing hydraulic lift unit to transmission case noting positions, lengths and thread sizes.**
13. Fit two long studs, see DATA, as guides and two jacking bolts.
14. Take weight of hydraulic lift unit on suitable lifting equipment.
15. Position tray to catch oil, jack the unit from the transmission and manoeuvre clear, noting that the flanges should be kept parallel to each other to prevent damage to the P.T.O. and hydraulic pump drive as the unit is withdrawn.
16. Lower unit onto suitable supports and remove lifting equipment.

continued

https://tractormanualz.com/

Refitting

17. Clean joint faces and fit a new gasket (early models); apply jointing compound, see DATA (later models).

18. Lift unit and manoeuvre into position, noting:
    a. Engage P.T.O. drive and rotate the output shaft as the unit is positioned to ensure the splines engage.
    b. Ensure flanges of unit and transmission are kept parallel as they are brought together.
    c. Fit bolts finger tight only.
19. If the hydraulic case, or any part of the P.T.O. drive has been replaced since the unit was removed, check that the correct shims are fitted between the P.T.O. output shaft housing and the case, as follows:
    a. Remove P.T.O. shaft cover and anchor bracket.
    b. Engage P.T.O. drive by turning the selector shaft fully clock-wise while rotating the output shaft to align the splines.
    c. Remove bolts, nuts, locknuts, washers and brackets.
    d. Withdraw output shaft assembly and remove shims.
    e. Tighten hydraulic lift unit to transmission case bolts to torque figures in DATA.
    f. Insert output shaft assembly without shims and push it forward to ensure that the output shaft bottoms in the intermediate shaft. Turn the output shaft to ensure that the splines of the coupling engage.
    g. Hold the housing forward and determine the gap 'A' between the housing and hydraulic case using feeler gauges.
    h. Withdraw assembly, fit shims which just exceed the gap measured, see DATA, to allow minimum end-float, then refit assembly and all other components removed, tightening bearing housing nuts to torque in DATA.
20. Tighten lift unit to transmission case bolts if not previously tightened, to torque figures in DATA.
21. Refit valve chest to cylinder filter complete with bracket and pipe and tighten securing bolt to torque in DATA.
22. Refit P.T.O. control lever to splined shaft, noting:
    a. Turn the output shaft by hand and check the P.T.O. engagement and disengagement. Note that as the hand lever is moved from the 'P.T.O.' position the drive should disengage just before the hand lever reaches the 'OUT' position. Reposition the hand lever on the splines as required and fit pinch-bolt.
23. Refit trailer plug socket and secure cable with plastic tie.
24. Fit clevis pins securing control rods to operating levers.
25. Position drawbar on jack, manoeuvre into position, fit bolts and tighten to torque in DATA.
26. Fit pick-up hitch lift-rods to lift-arms.

continued

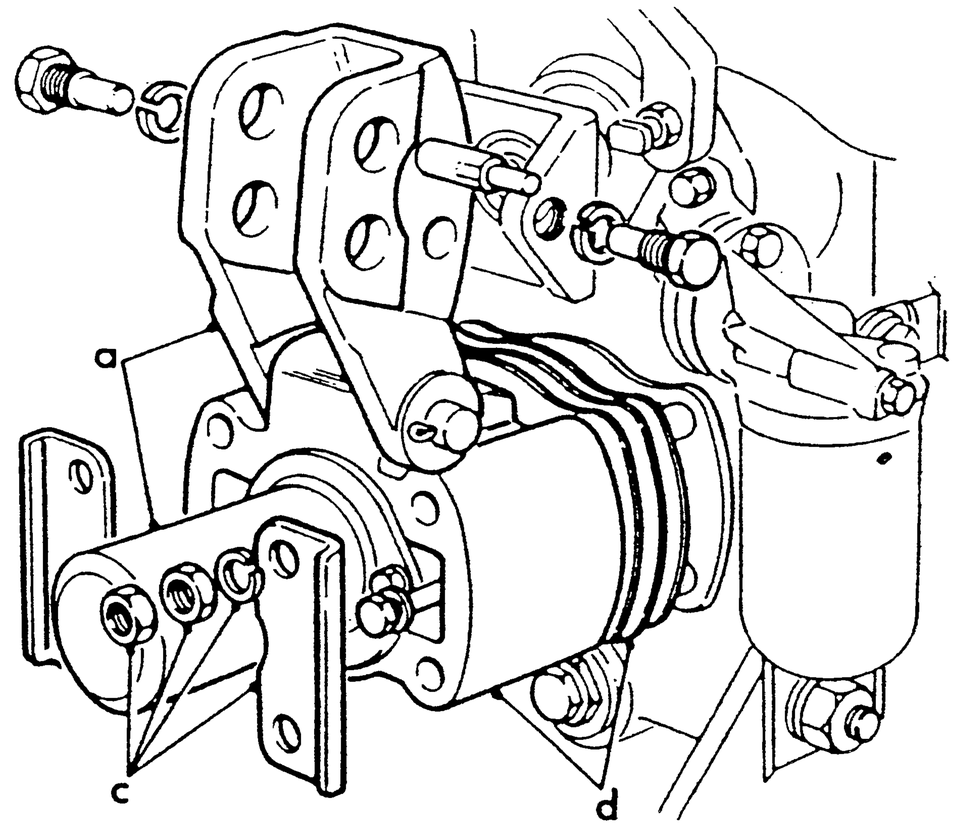

19

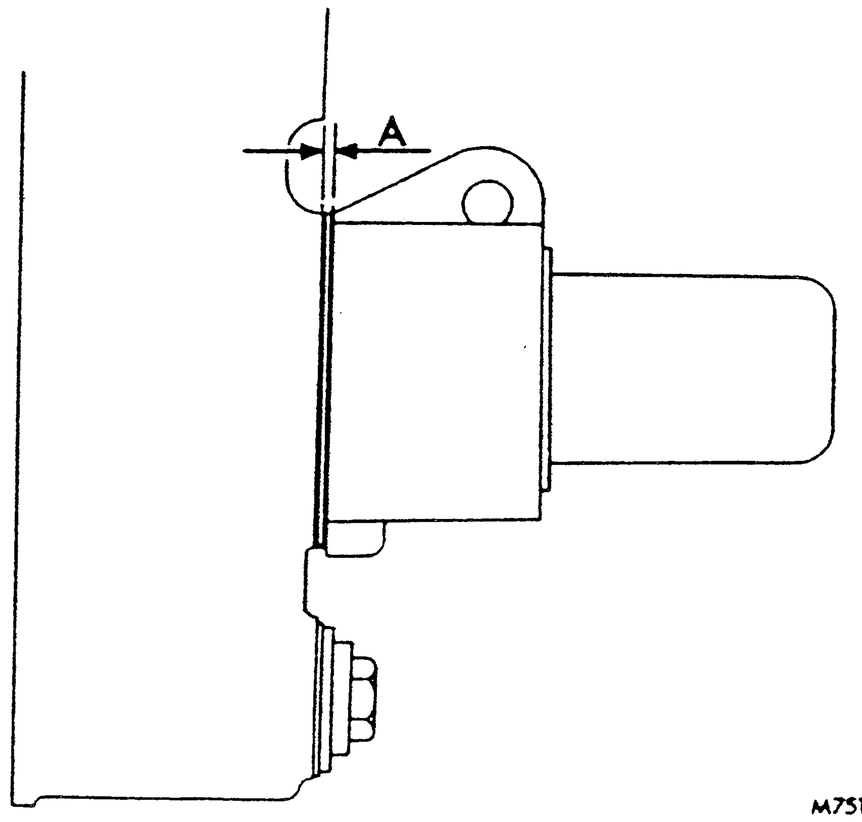

27. Connect pick-up hitch release cable and fit clamp securing outer cable to bracket.
28. Refit lower link, stabiliser, lift-rod assemblies.
29. Fill transmission with oil of correct grade, see TB09.
30. Connect battery and refit side cover.

DATA

Hydraulic lift unit

Shim thickness (between P.T.O. housing and unit)	0,5 mm (0.020 in)

****Special lubricants and compounds** (later models)

Hydraulic case sealing compound	Loctite 510**

Torque tightening figures

	Nm	kgf m	lbf ft
Drawbar securing bolts	340	35	250
**Hydraulic lift to transmission case bolts:			
½ in U.N.F.	176	18	130
7/16 in U.N.F.	58	5,8	42
½ in U.N.C.	163	16,6	120**
P.T.O. bearing housing	130	13,3	96

LIFT UNIT CROSS-SHAFT ASSEMBLY

—Remove and refit TB53.15.06

Removing

1. Remove lift-rods from lift-arms.
2. Remove bolts and lift off the cross-shaft assembly.
   NOTE: If a trailer tipping/auxiliary coupling is fitted, release the banjo bolt securing it to the hydraulic case and move it clear so that the cross-shaft may be removed.
3. Move main control lever to 'LOWER' in 'DRAUGHT' control or, if the control rods are not connected, secure the main operating lever in its fully rearward position. This ensures that the main lever is not damaged, or its shaft bent, when the cross-shaft is replaced.

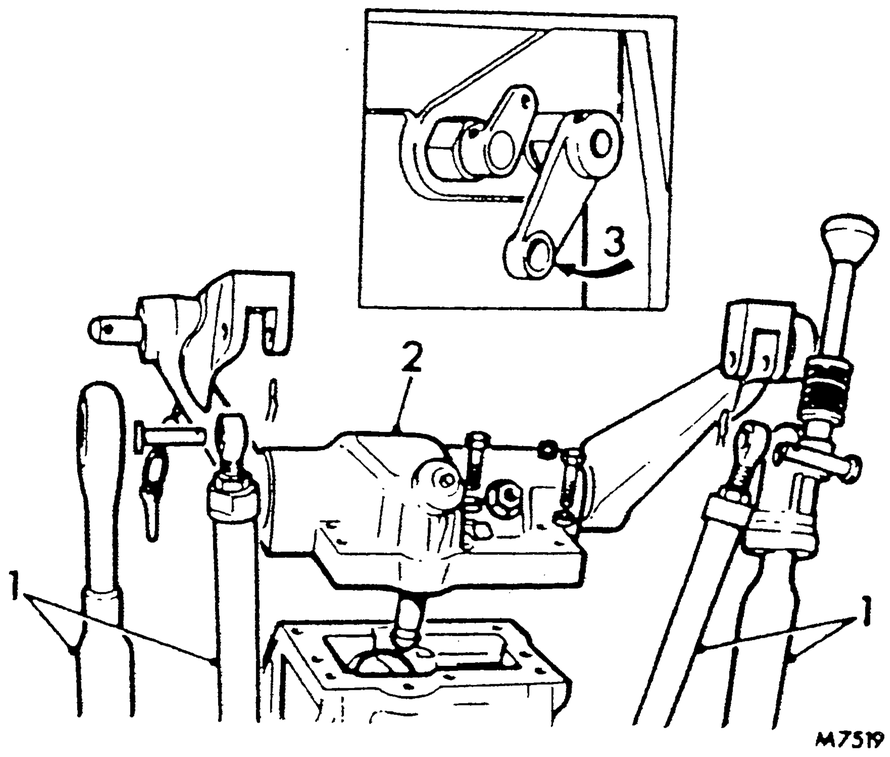

Refitting

** 4. Clean joint faces and ensure controls are still positioned as detailed in instruction 3.
5. Reverse procedure in 1 and 2, using sealing compound quoted in DATA and tightening bolts to torque in DATA, noting the two alternative threads.

DATA

****Special lubricants and compounds**

Cross shaft assembly sealing compound	Loctite 510**

Torque tightening figures

	Nm	kgf m	lbf ft
**Cross-shaft assembly to lift unit bolts: ½ in U.N.F.	136	13,8	100
½ in U.N.C.	163	16,6	120**

https://tractormanualz.com/

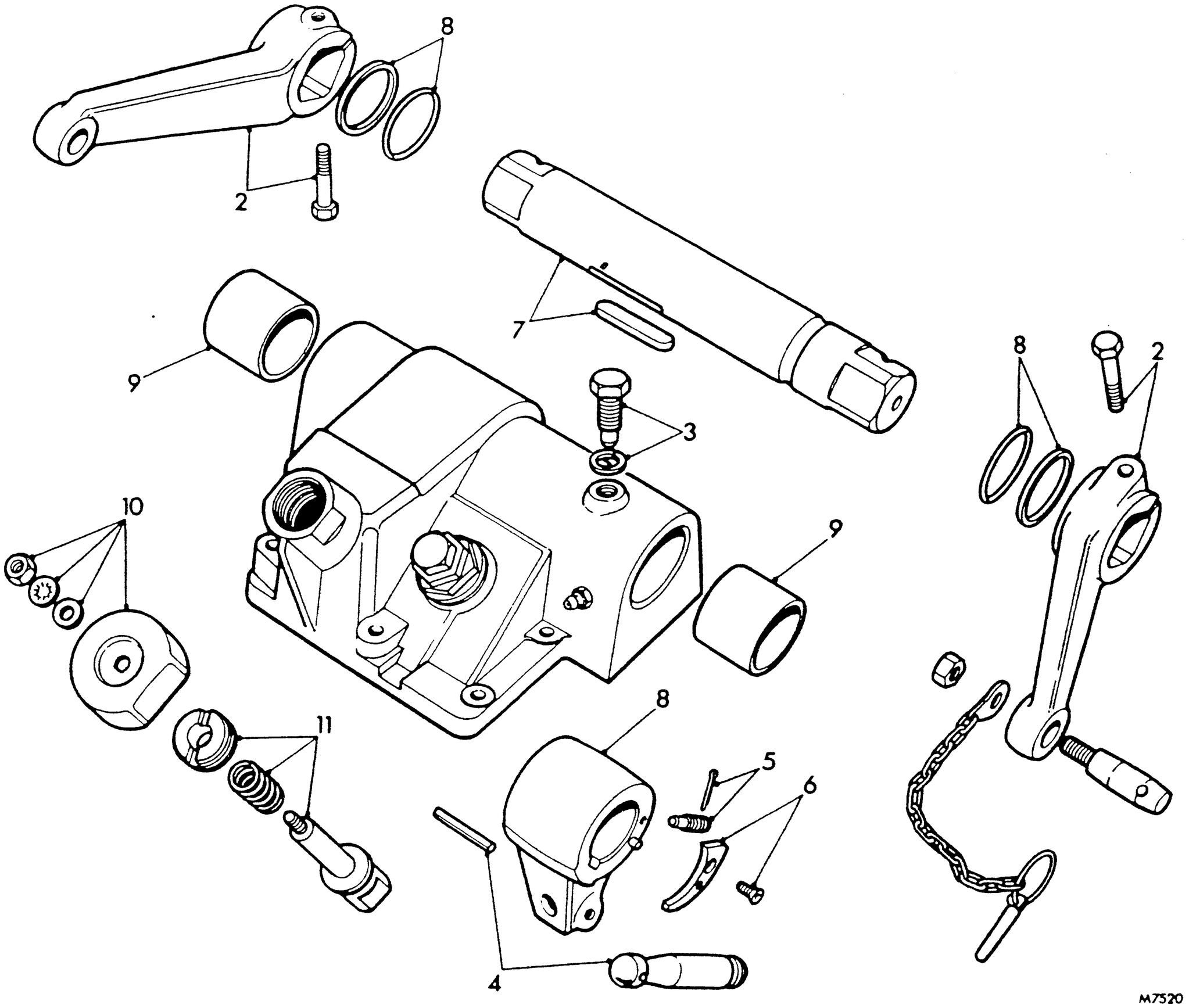

LIFT UNIT CROSS-SHAFT ASSEMBLY

Dismantling

1. Remove cross-shaft assembly. TB53.15.06.
2. Slacken clamp bolts and remove lift-arms from cross-shaft.
3. Remove cross-shaft locating screw and washer.
4. Release locking plunger, if engaged, and drive out roll-pin securing connecting rod to lever.
5. Remove split-pin and lever locating screw.
6. Remove screw securing cam plate and withdraw cam plate from dowel.
7. Drive cross-shaft through lever and bearings until key can be removed.
   NOTE: Ensure cam plate dowel is not damaged.
8. Continue to drive out cross-shaft until lever and cross-shaft can be withdrawn, noting the O-ring and nylon backing ring at either end of shaft.
9. Remove bushes if they are worn or damaged.
10. Remove nut, washers and locking plunger cap.
11. Unscrew plunger retainer and remove spring and plunger.

Inspection

12. Clean all components and replace if damaged or worn.

continued

https://tractormanualz.com/

Reassembly

13. Refit bushes, if removed.
14. Fit cross-shaft, lever and key.
15. Fit O-ring seals and backing rings.
16. Fit cross-shaft locating screw and washer.
17. Adjust position of lever on cross-shaft until locating screw holes align, then fit locating screw and lock with split pin.
18. Fit cam plate on dowel and secure with screw.
19. Fit locking plunger, spring and retainer. Screw in retainer until its top face is flush with the housing, then lock in position by staking each end of slot.
20. Fit locking plunger cap, plain washer, spring washer and nut. Check operation of locking plunger.
21. Position connecting rod and secure with roll-pin.
22. Fit lift-arms, adjust cross-shaft end-float to within figure in DATA and tighten clamp bolts to torque in DATA.
23. Refit cross-shaft assembly. TB53.15.06.

DATA

Cross-shaft

End-float ..... 0,58 mm (0.023 in) maximum

Torque tightening figures

	Nm	kgf m	lbf ft
Lift-arm clamp bolts	165	16,5	120

LIFT CYLINDER PISTON RINGS

– Remove and refit TB53.15.11

To check rings

Lift a heavy implement and stop the engine ensuring the lift latch is not engaged. If the implement drops, remove the cross-shaft assembly and check the amount of oil on top of the piston. Excessive oil – fit new rings, minimal oil – some other fault.

Removing

1. Remove cross-shaft. TB53.15.06.
2. Withdraw piston using a suitable tool to grip its inside diameter.
3. Remove rings from piston.
4. Inspect piston and bore of cylinder for scoring damage and wear. If bore is unsatisfactory renew the cylinder.

Refitting

5. Fit new rings to piston.
6. Lubricate and insert piston ensuring rings are not damaged.
7. Refit cross-shaft. TB53.15.06.

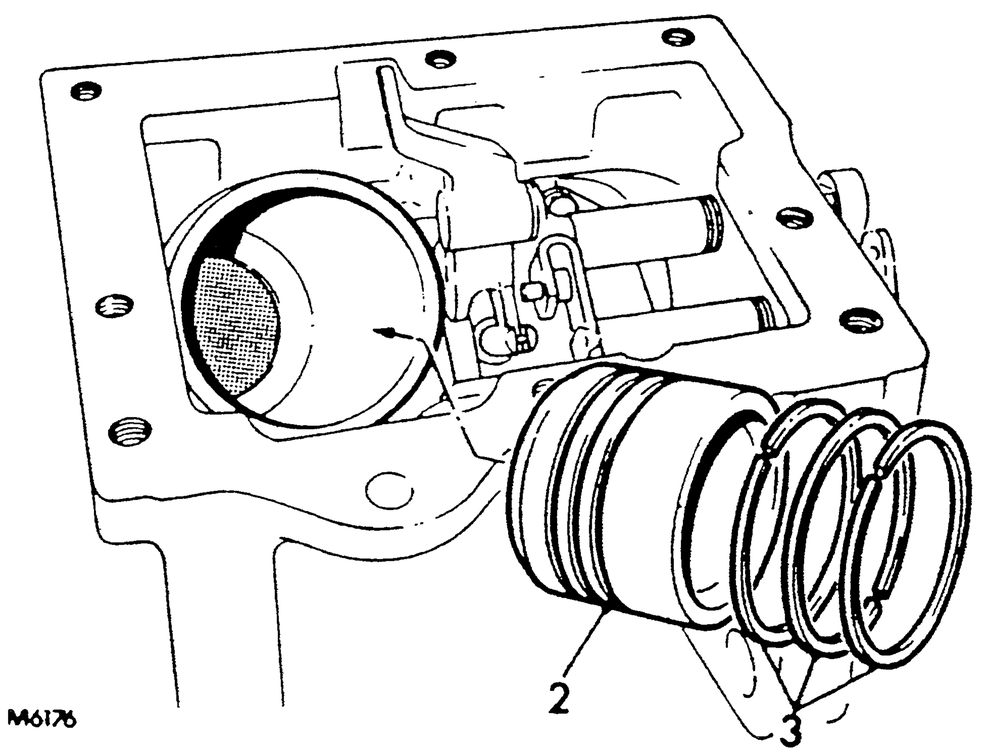

M6176

LIFT CYLINDER AND PISTON

—Overhaul TB53.15.12

Dismantling

1. Remove lift cylinder, see TB53.15.15.
2. Push out the piston, using a rod through the union.
3. Remove union and O-ring seal.
4. Remove rings from piston.

Inspecting

5. Clean components thoroughly.
6. Inspect cylinder bore for scoring, wear, damage and signs of the piston sticking.
7. Inspect sealing surfaces of union.
8. If cylinder has no obvious defects, check for cracks using suitable detection equipment.
9. Inspect piston for damage, scoring or wear.
10. Renew damaged or worn piston rings.
11. Ensure union and O-rings are serviceable.

Reassembling

12. Refit rings to piston with the gaps of adjacent rings at 180° to each other.
13. Lubricate bore and refit piston, ensuring the rings are not trapped or damaged.
14. Refit O-ring and union.
15. Refit lift cylinder, see TB53.15.15.

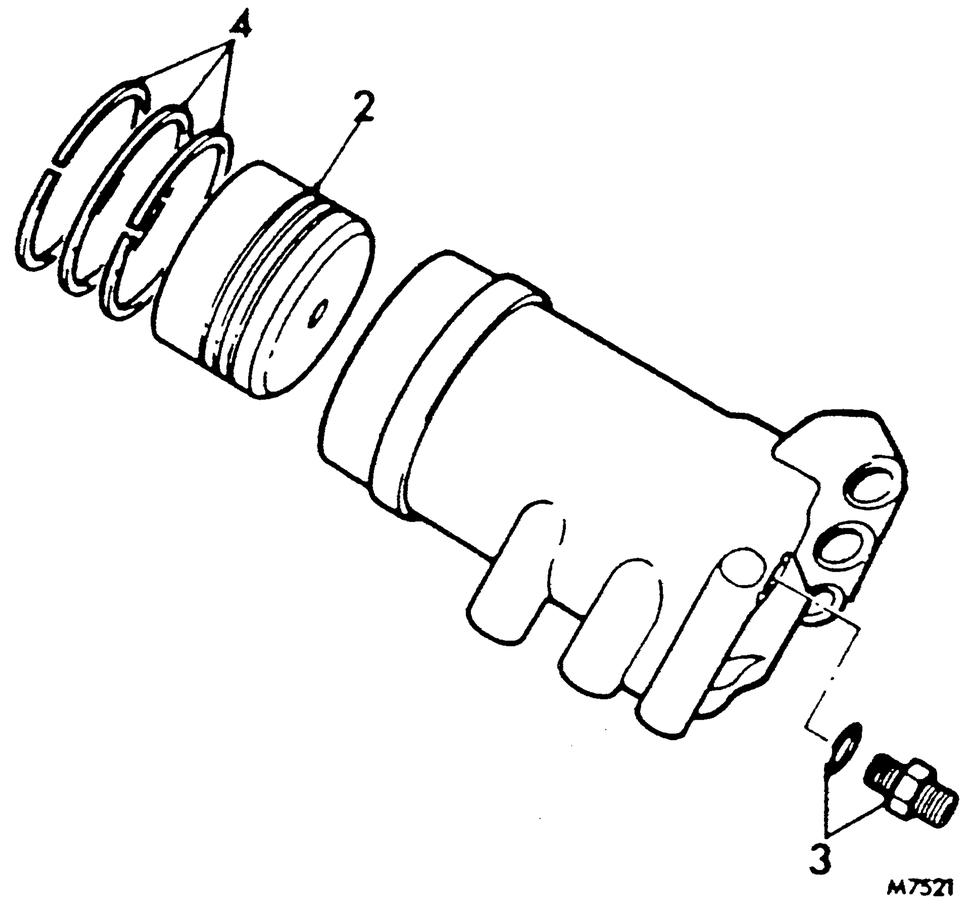

**EXTERNAL SERVICES SPOOL VALVE

— Remove and refit TB53.15.13

Removing

1. Lower draught link.
2. Mark pipes for refitment, disconnect at valve and move aside.
3. Remove circlips and disconnect connecting rods at valve.
4. Remove bolts securing valve to mounting bracket and withdraw from tractor.

Refitting

5. Reverse procedure 1 to 4, connecting pipes marked for reassembly.**

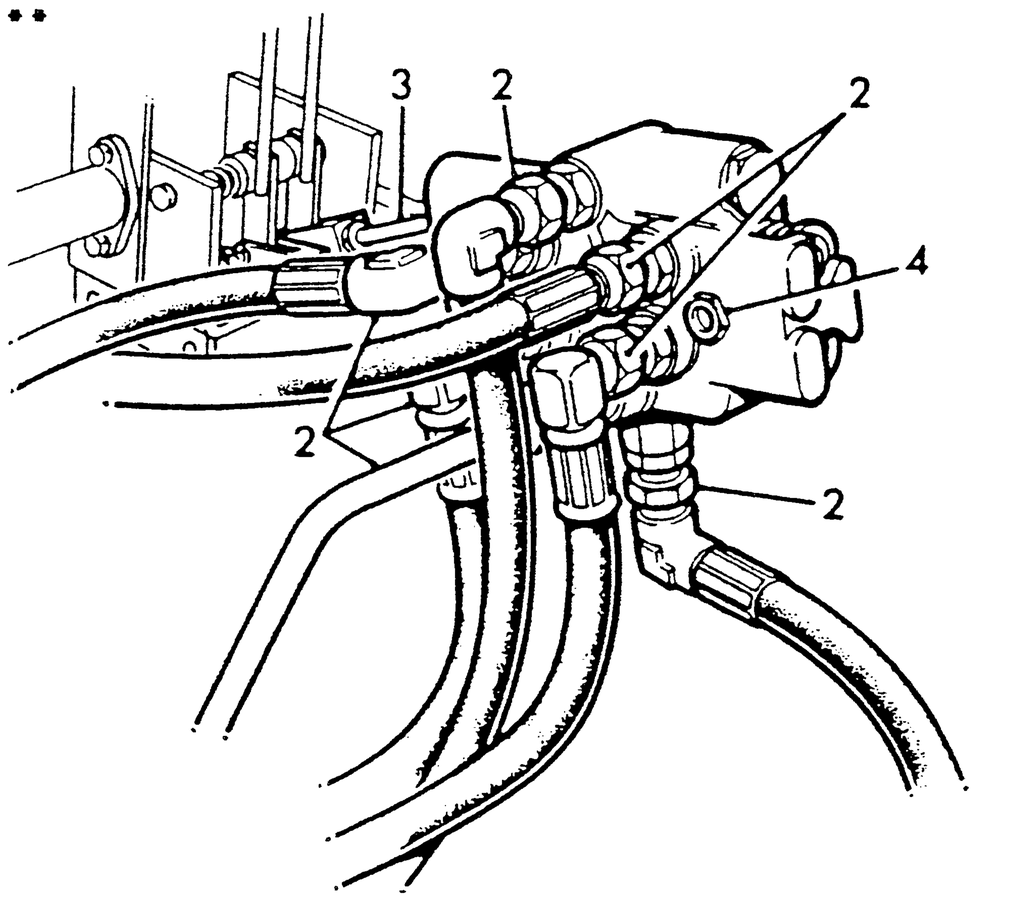

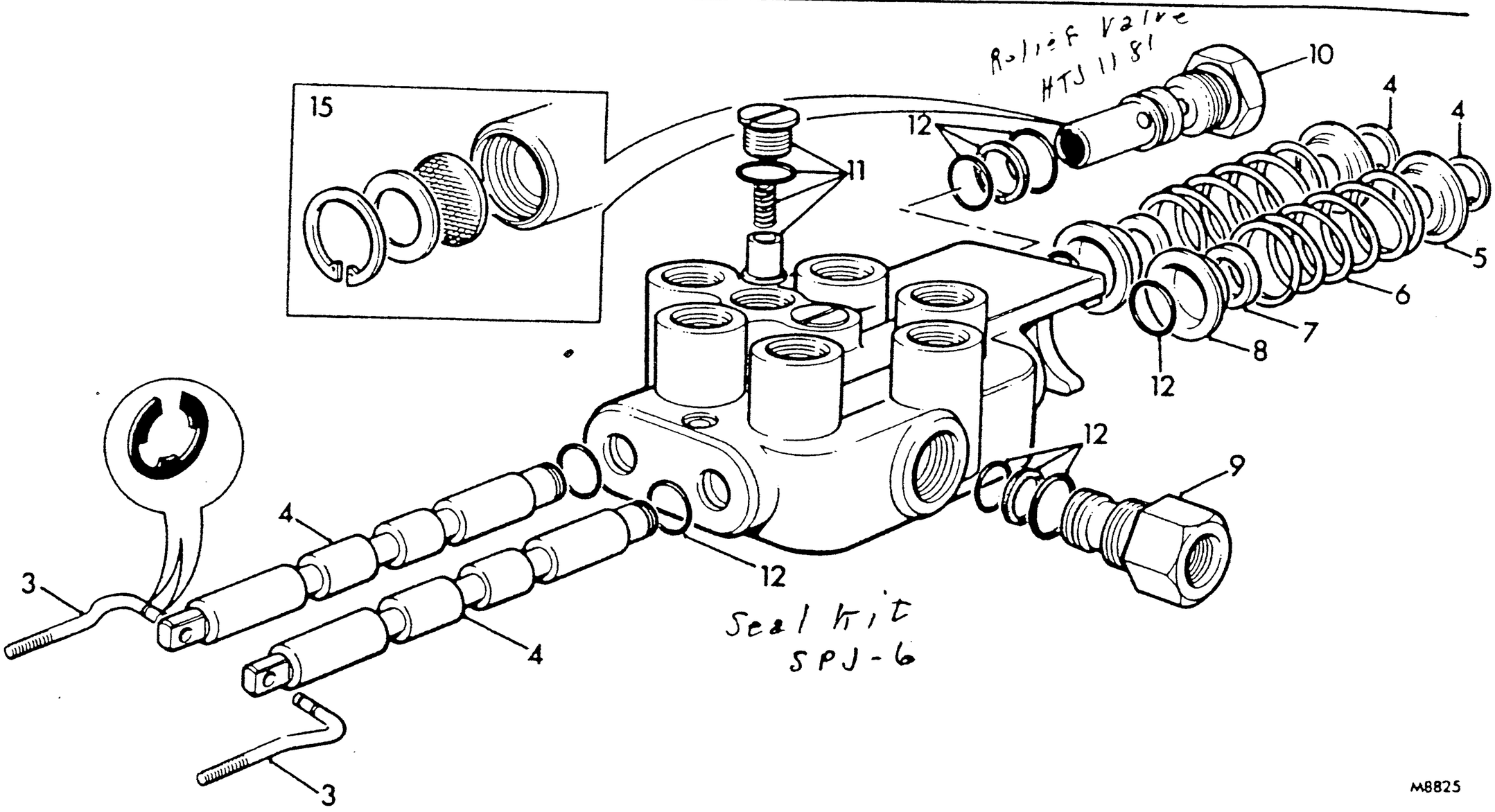

M8825

EXTERNAL SERVICES SPOOL VALVE

—Overhaul **TB53.15.14**

NOTE: If internal leakage with the spools in spring centred position has been experienced, wear is indicated between the spool and body bore. This can be corrected by replacing the spools and body as an assembly. Spools or bodies cannot be serviced separately.

Dismantling

1. Remove valve. TB53.15.13.
2. Disconnect external services pipes at valve.
3. Remove circlips and disconnect control rods from spools.
4. Remove circlips from spools; withdraw spools, collecting components in the following order.
5. Shallow washers.
6. Spool springs.
7. Spacer washers.
8. Deep washers.
9. Remove pressure beyond plug.
10. Remove oil pressure relief valve. HTJ 1181
11. Remove lift check plugs and remove, springs, seats and O-rings.
12. Remove all O-rings and back-up washers from, relief valve, body bore and plugs.

Inspecting

13. Clean all components in a suitable solvent, dry thoroughly and remove all burrs.
14. Inspect all components for wear, damage or distortion, and replace where necessary.
15. The relief valve is pre-set and no alteration can be made to it. However, to ensure cleanliness in the system, snap-ring, washer and screen may be removed, cleaned with air and replaced; also ensure hole in orifice plate is not blocked. If it becomes unserviceable, replace it with a new assembly.

Reassembling

NOTE: All metal parts should be lightly lubricated prior to assembly and O-rings and back-up washers should be replaced as new parts.

16. Refit all O-rings and back-up washers to plugs, body bore and relief valve.
17. Refit O-rings, seats, springs and lift check plugs.
18. Refit oil pressure relief valve and pressure beyond plug.
19. Feed spools through pump body, fitting deep washers, spacers, springs and shallow washers; then secure with circlips.
20. Refit control rods to spools and secure with circlips.
21. Connect external services pipes at valve.
22. Refit valve to tractor. TB53.15.13.
23. Adjust control rods if necessary, to give correct travel, so that when the operating levers are in neutral, they are in the mid-position of their respective quadrant slots. Check pressure, see TB53.10.01 operation 1, and operation of valve.

continued

https://tractormanualz.com/

FAULT FINDING CHART

FAULT	PROBABLE CAUSE	REMEDY
1. Low system pressure (see TB53.10.01)	a. Dirty relief valve screen or plugged orifice plate	a. Remove and clean
	b. Worn or stuck relief valve	b. Remove valve and replace with new assembly
	c. Worn pump	c. Replace or overhaul
2. Sticking valve spool	a. Misaligned control linkage	a. Correct alignment
	b. Foreign matter in spool bore	b. Remove spool and clean bore
3. External leakage	a. Damaged O-rings	a. Dismantle valve and replace O-rings
4. Work load lowers with spool in 'slow-raise' position	a. Damaged lift check plunger	a. Replace lift check plunger
	b. Damaged lift check seat in body	b. Replace spool and body assembly
	c. Damaged O-ring on lift check plug	c. Replace O-ring
5. Load drops with spool in centred position	a. Damaged lift cylinder piston seals	a. Replace lift cylinder piston seals
	b. Line to cylinder leaking	b. Tighten fittings or replace hose
	c. Scratched spool or body bore	c. Replace control valve

https://tractormanualz.com/

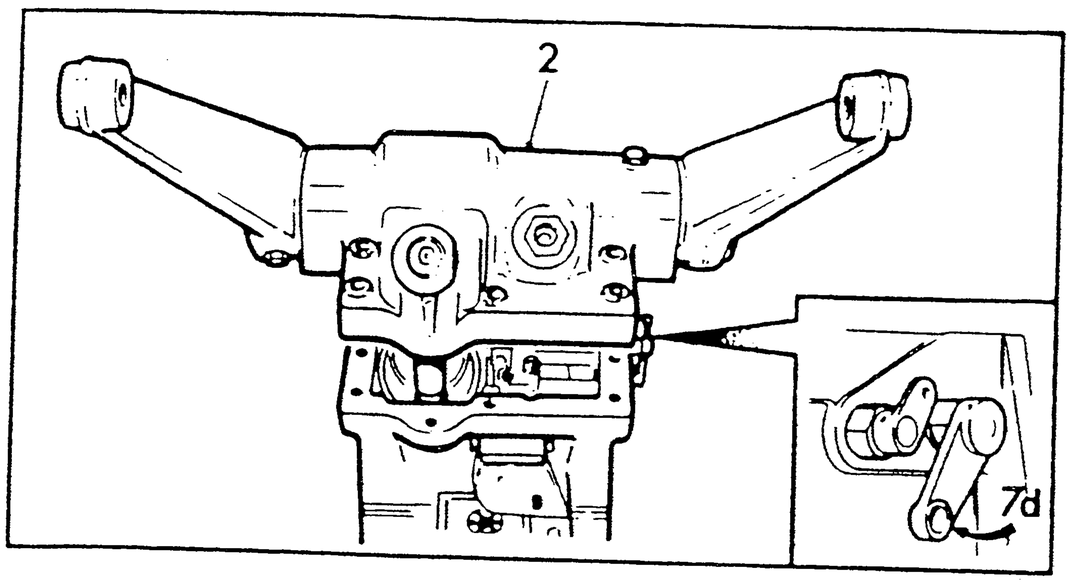

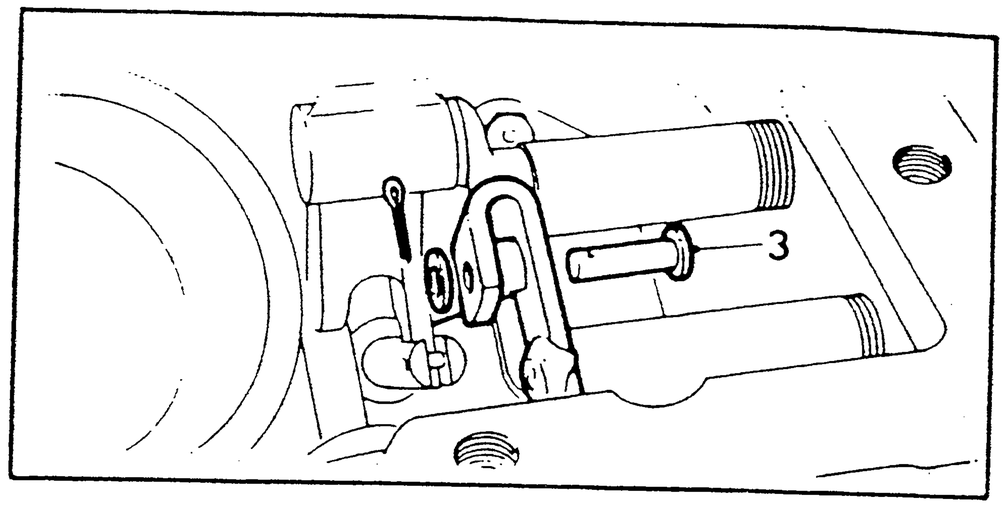

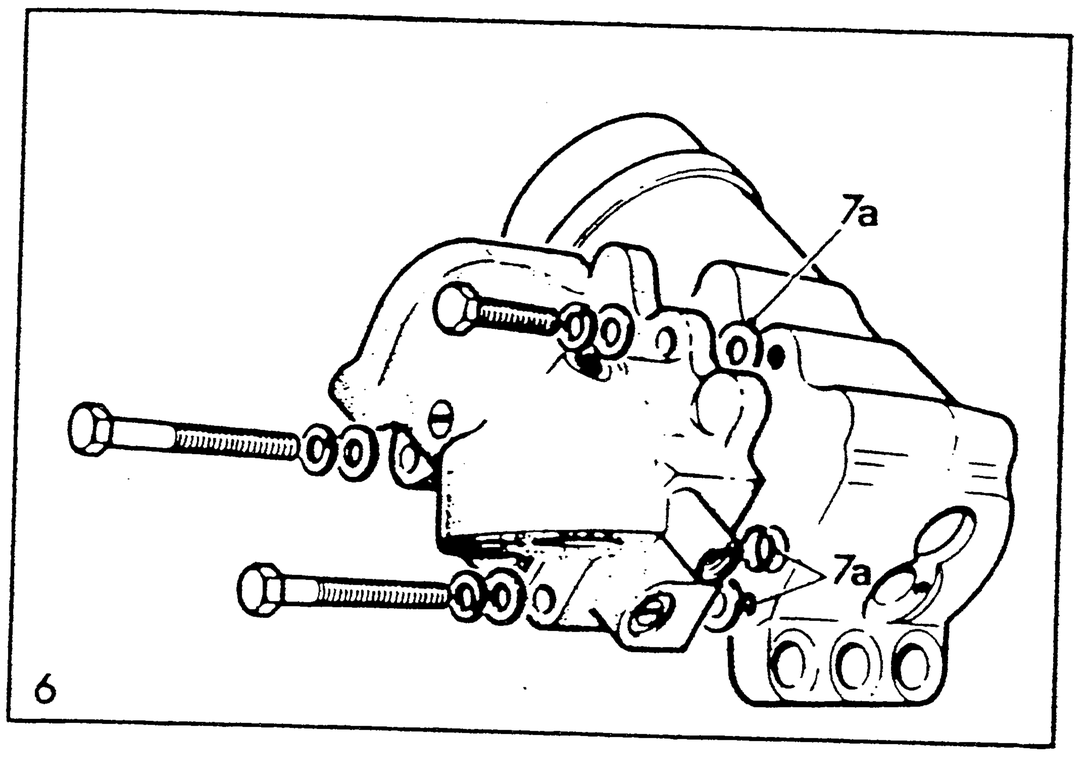

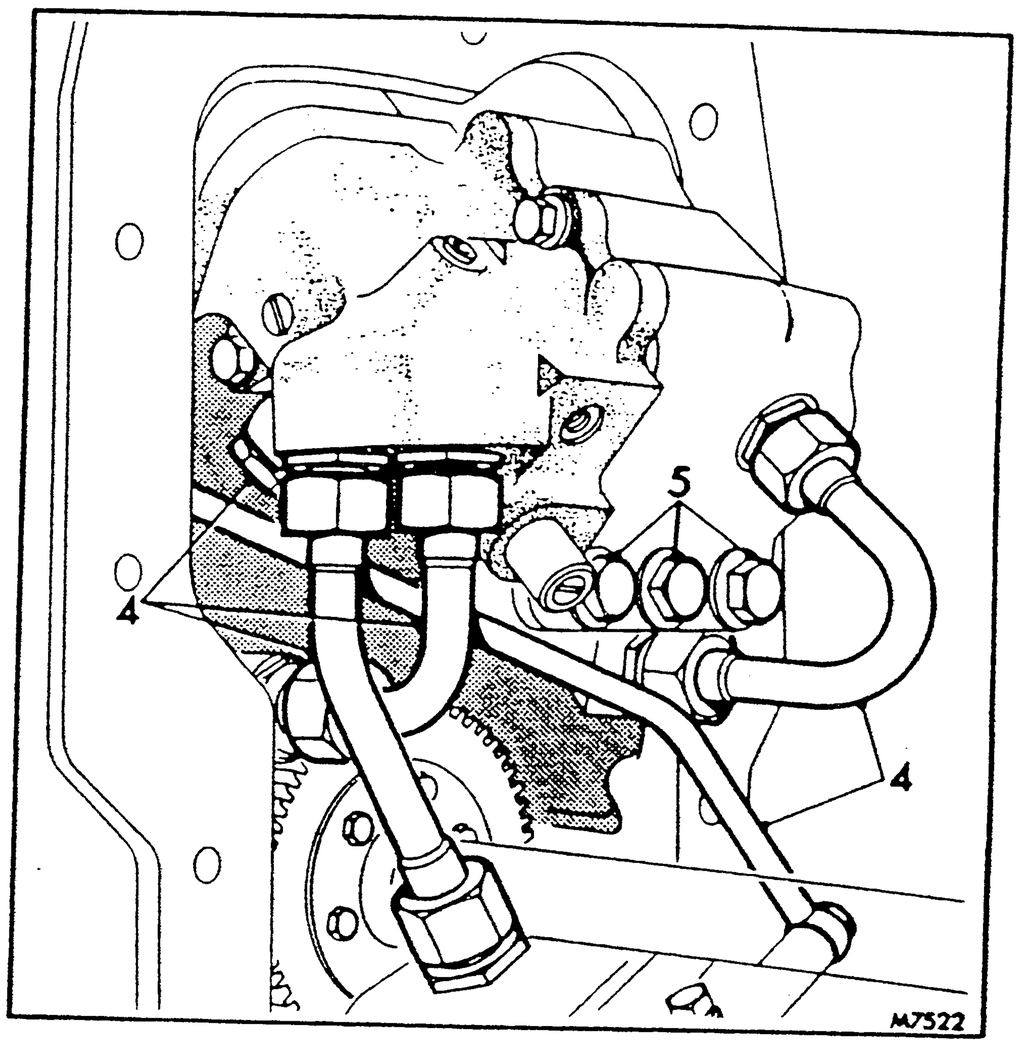

CONTROL VALVE ASSEMBLY

—Remove and refit TB53.15.15

Removing

1. Remove lift unit. TB53.15.01.
** 2. Remove bolts, lift off cross-shaft assembly and clean joint faces.**
3. Remove clevis pin securing operating link to auxiliary valve plunger.
4. Remove pipes connecting control valve to pump and hydraulic unit casing.
5. Remove dowel bolts and withdraw control valve/lift cylinder assembly.
   NOTE: Mark bolts to ensure they may be fitted in their original positions.
6. Remove bolts and detach lift cylinder from control valve, noting the shim washers and O-ring between the units.

Refitting

7. Reverse procedure in 1 to 6, noting:
   a. Ensure O-ring and shim washers are positioned between valve and cylinder.
   b. Inspect all O-rings, sealing washers and pipes, and renew as required.
   c. Tighten bolts to torque figures in DATA, ensuring valve to cylinder bolts are tightened evenly.
   d. Secure main operating lever in the fully rearward position to ensure that the main lever is not damaged or its shaft bent when the cross-shaft is replaced.
e. Use Loctite 510 to seal cross-shaft assembly to hydraulic case.
8. Adjust the controls and check operation of hydraulics. TB53.10.05.

DATA

Torque tightening figures	Nm	kgf m	lbf ft
Control valve to cylinder bolts	37	3,7	27
Lift cylinder to case dowel bolts	190	19,4	140
**Cross-shaft assembly to lift unit bolts: ½ in U.N.F.	136	13,8	100
½ in U.N.C.	163	16,6	120**

https://tractormanualz.com/

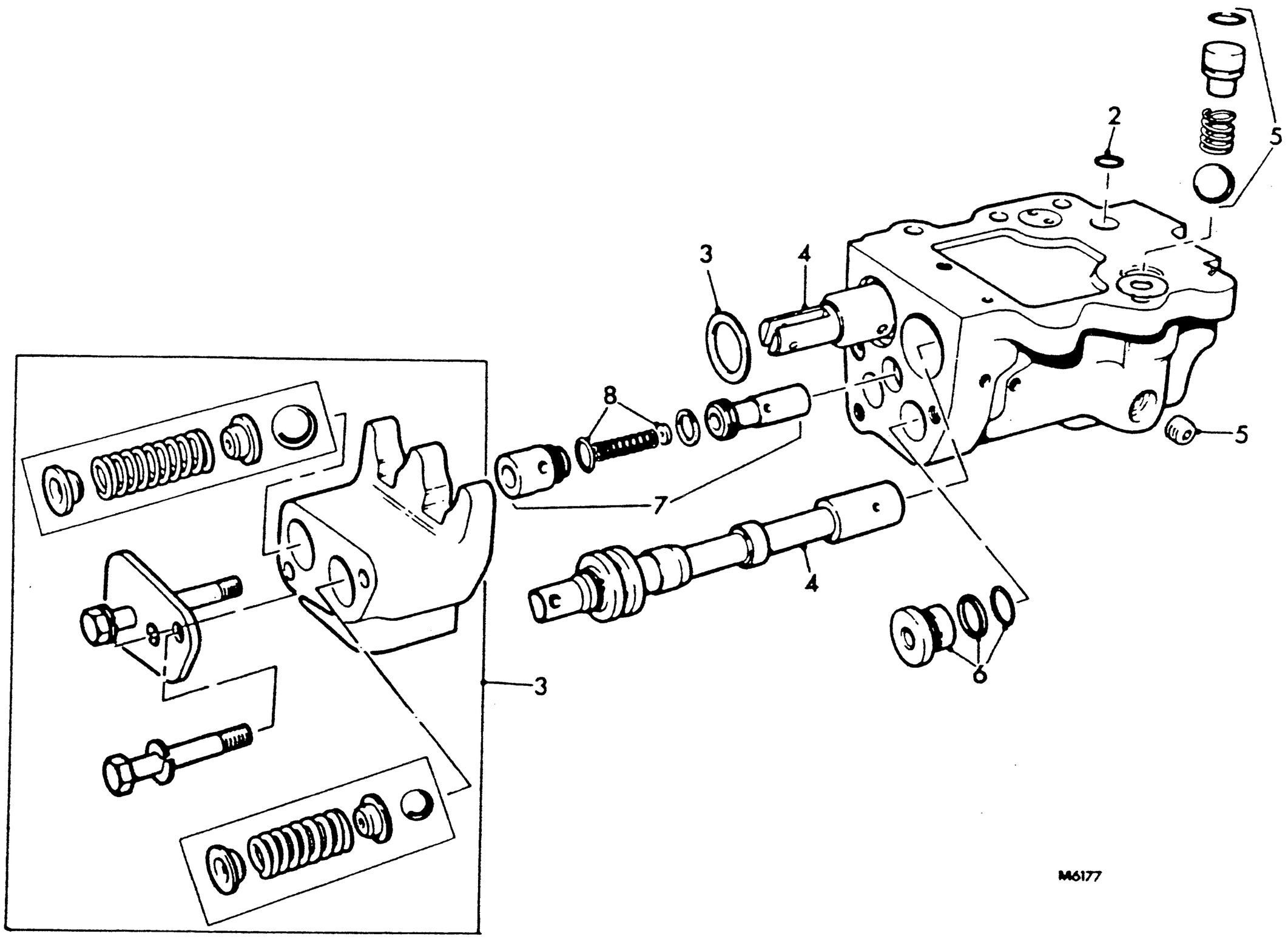

CONTROL VALVE ASSEMBLY—EARLY MODELS

— Overhaul TB53.15.16

Dismantling

1. Remove control valve. TB53.15.15.
2. Remove valve to cylinder O-ring seal.
3. Remove relief valve housing and collect balls, springs, spring end caps and spacer from main valve plunger.
4. Remove valve plungers.
   NOTE: Care must be taken that the valve plungers are not damaged while they are removed.
5. Remove auxiliary non-return valve plug by striking it sharply, causing the reaction of the spring to push it out sufficiently for it to be withdrawn. Alternatively, remove the Allen plug from the side of the valve body and push out the valve.
6. Prise out the high pressure relief valve seat and remove its O-ring and back up washer.
7. Remove unloader valve plug, spring and piston.
8. Remove orifice plate (if fitted) from bore of unloader valve and O-ring from plug.

Inspecting

9. Inspect valve plungers for scoring and damage, insert them in the valve body and check that they move freely through their working range; if either plunger sticks change the valve assembly complete.
   NOTE: If only the auxiliary plunger sticks attempt to rectify it by polishing the lower land.
10. Examine unloader valve piston and piston ring and ensure that the orifice is not blocked; replace parts as necessary. If the bore is damaged change the valve assembly complete.
11. Examine all valve seats, balls and sealing faces.
12. Check free lengths of springs (see DATA) and replace if necessary.
13. Clean all components using a suitable solvent and dry thoroughly.

continued

https://tractormanualz.com/

Reassembling

Lubricate all components with clean hydraulic oil as they are refitted.

14. Insert orifice plate (if fitted) to bore of unloader valve.
15. Insert unloader valve into its bore ensuring that the piston ring is not damaged.
    NOTE: The unloader valve bore is chamfered.
16. Insert unloader valve spring, fit a new O-ring to the plug and insert plug.
17. Fit a new O-ring and back-up washer to the high pressure relief valve assembly, refit valve assembly into valve body and insert valve seat.
    NOTE: The back-up washer should be nearest the flange.
18. Fit the auxiliary non-return valve using a new O-ring and refit the Allen plug (if removed), sealing it with compound quoted in DATA, noting that there should be at least three threads showing when the plug is tight or it will restrict the flow of oil through the valve body.
19. Reassemble and insert the valve plungers, fitting the spacer over the main plunger spring housing.
20. Insert valve components in housing cover, position housing on valve body and tighten Allen screws to torque in DATA.
21. Fit a new valve chest to cylinder O-ring seal.
22. Refit control valve. TB53.15.15.

DATA

Spring free lengths

High pressure relief valve spring	34,29 mm (1.35 in)
Low pressure relief valve spring	42,84 mm (1.687 in)
Auxiliary non-return valve spring	24,1 mm (0.95 in)
Unloader valve spring	24,9 mm (0.98 in)

Special lubricants and compounds

Auxiliary non-return valve Allen plug sealing compound	Loctite 275 and Loctite primer.

Torque tightening figures

	Nm	kgf m	lbf ft
Relief valve housing bolts	21	2,1	15

https://tractormanualz.com/

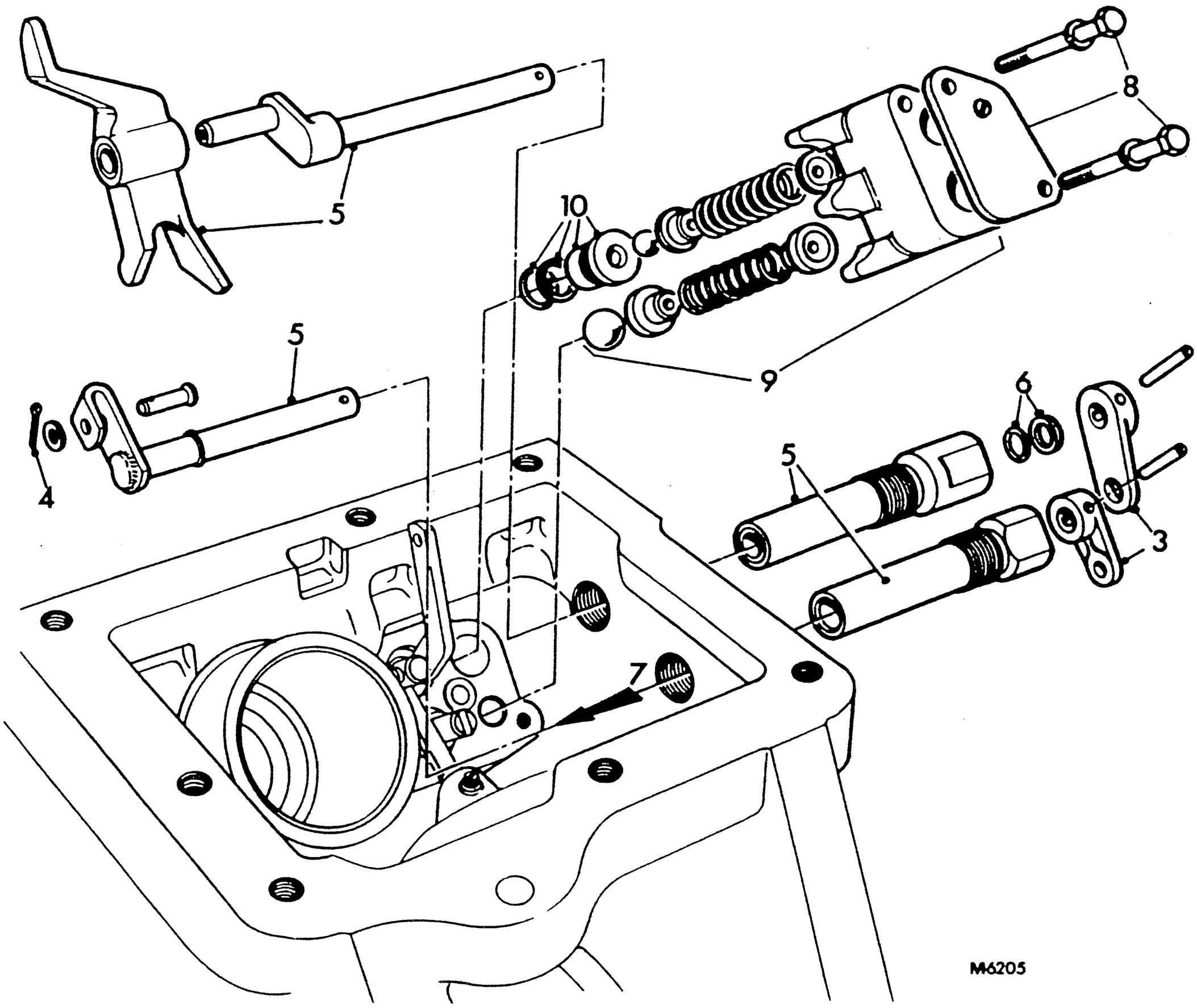

RELIEF VALVE ASSEMBLIES—EARLY MODELS

— Overhaul TB53.15.19

Removing

1. Remove cross-shaft assembly. TB53.15.06.
2. Remove clevis pins securing control rods to levers.
3. Remove roll-pins and levers.
4. Remove clevis pin securing auxiliary link to shaft.
5. Unscrew bearing housings and remove housings, shafts and main lever.
6. Remove distance piece and O-ring seal from outer end of main shaft bearing housing.
7. Pack space between control valve and main case with lint free cloth to prevent components falling into the differential housing.
8. Remove retaining bolts and cover from relief valve housing.
   NOTE: Hold the housing in position on the valve body to prevent the high pressure relief valve ball falling into the low pressure valve hole.
9. Lift housing approximately 3 mm ($\frac{1}{8}$ in) to clear high pressure relief valve seat and slide it off the valve body toward the right-hand side of the main case to ensure high pressure relief valve ball does not drop into the low pressure relief valve hole; remove the valve components and housing.
10. Prise high pressure relief valve seat from valve body.

continued

https://tractormanualz.com/

Reassembling

Lubricate all components with clean hydraulic oil as they are refitted.

14. Renew the O-ring and back-up washer of the high pressure relief valve assembly, refit valve assembly into valve body and insert valve seat.
    NOTE: The back-up washer should be nearest the valve.
15. Insert valve components in housing cover, position housing on valve body and tighten Allen screws to torque in DATA.
16. Refit auxiliary cross-shaft link-rod and remove cloth packing from around valve.
17. Reverse procedure in 2 to 6.
18. Adjust hydraulic pressure. TB53.10.03.
19. Refit cross-shaft assembly. TB53.15.06.

DATA

Spring free lengths

High pressure relief valve spring	34,29 mm (1.35 in)
Low pressure relief valve spring	42,8 mm (1.687 in)

Torque tightening figures

	Nm	kgf m	lbf ft
Relief valve housing Allen screws	21	2,1	15

UNLOADER VALVE

— Fit new ring **TB53.15.20**

Removing

1. Remove relief valve assembly. TB53.15.19.
2. Pull plug from body.
3. Remove spring and withdraw unloader valve piston.
4. Remove piston ring and orifice plate.
5. Clean and inspect parts; renew as required.

Refitting

6. Reverse procedure in 1 to 4, ensuring O-ring seal is serviceable.

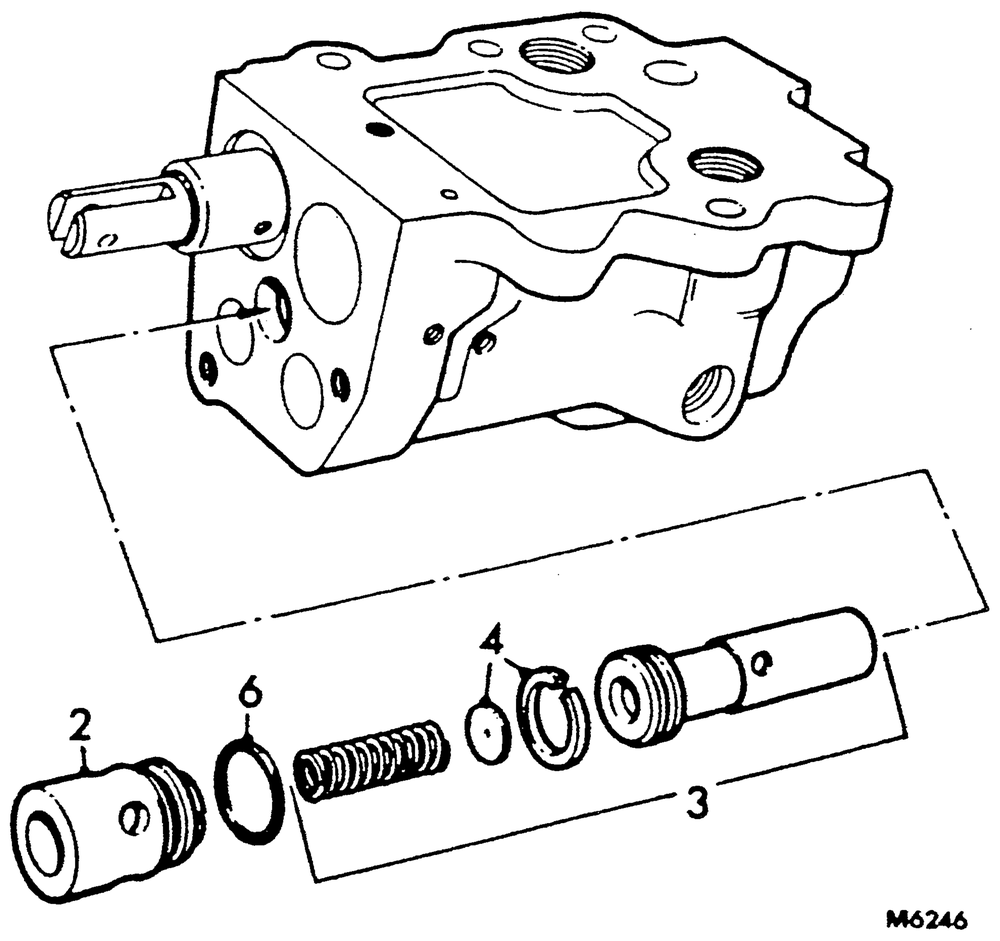

M6246

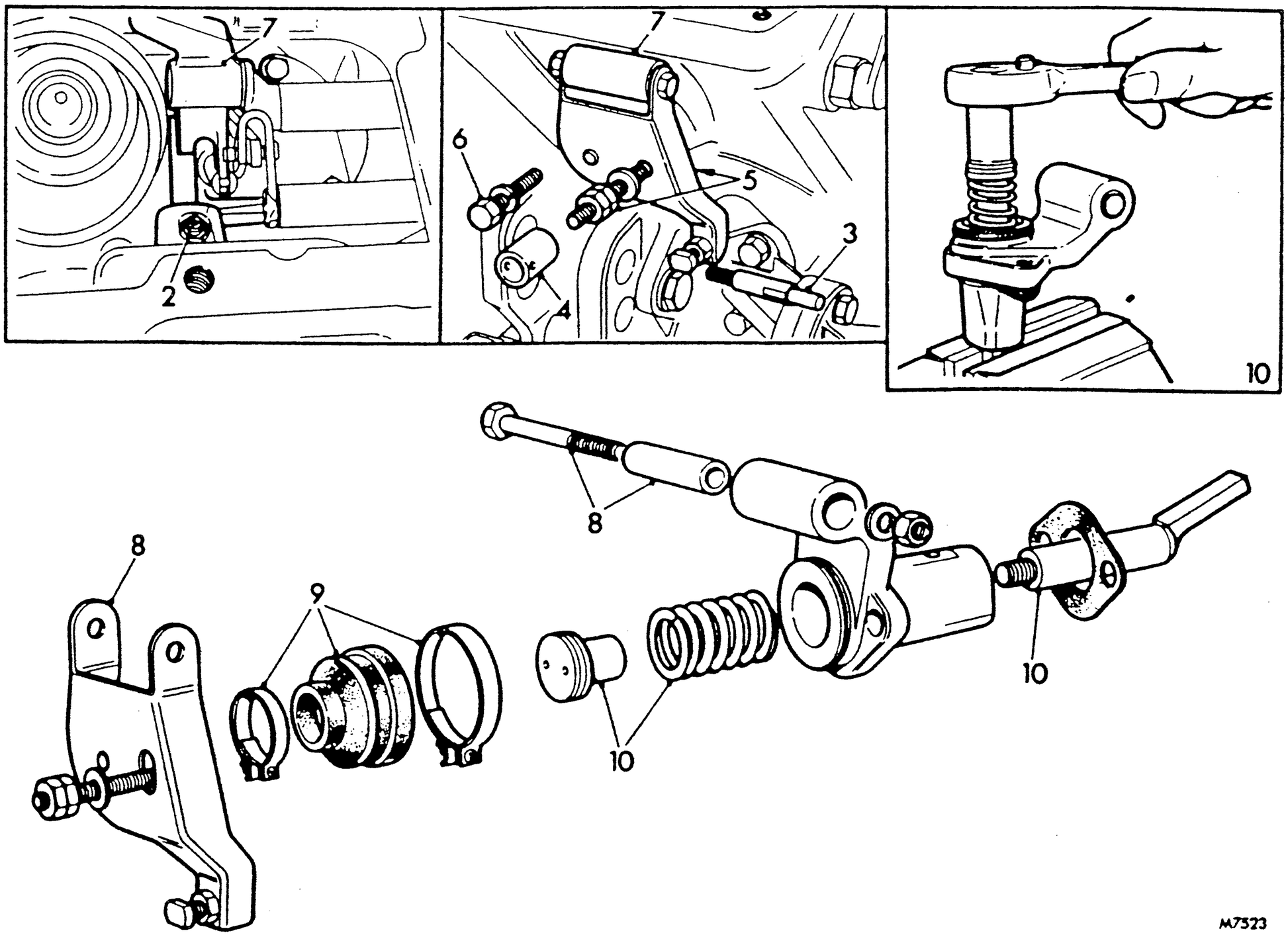

M7523

DRAUGHT SENSING MECHANISM

Dismantling

1. Remove cross-shaft. TB53.15.06.
2. Remove locating screw.
3. Remove actuating pin from anchor bracket.
4. Unlock and remove cover tube from lever limiting locknuts.
5. Slacken inner nut on stud, retaining the control to the hydraulic unit, and unscrew stud.
6. Remove screw securing control to hydraulic unit.
7. Position main lever and its operating shaft so that the lever is well clear of the draught control assembly.
8. Remove pivot bolt, lever and spacer.
9. Remove retaining clips and rubber gaiter.
10. Unscrew cap and remove cam and spring.

Inspection

11. Check lever pivot and cam bushes for wear, and replace as required.
12. Inspect parts for wear and damage, and replace as required.

Reassembly

13. Reverse procedure in 3 to 9, using a new gasket.
14. Fit locating screw, tighten into bottom of slot, back off half a turn and lock with nut; check cam for freedom of movement.
15. Refit cross-shaft. TB53.15.06.
16. Adjust hydraulic controls. TB53.10.05.

https://tractormanualz.com/

Inspecting

11. Examine the balls and seats for wear and damage; replace parts as necessary.
12. Check springs for free length (see DATA), damage and distortion.

Refitting

13. Renew the O-ring and back-up washer of the high pressure relief valve seat and insert it into the valve body.
14. Position the housing on the valve body and insert the valve components.
    NOTE: The high pressure relief valve has the smaller ball, stronger spring and thinner spring end-cap flanges.
15. Fit relief valve retaining cover and tighten bolts to torque in DATA; remove cloth packing from around valve.
16. Reverse procedure in 2 to 6.
17. Adjust hydraulic pressure. TB53.10.03.
18. Refit cross-shaft assembly. TB53.15.06.

DATA

Spring free lengths

High pressure relief valve spring	48,8 mm (1.92 in)
Low pressure relief valve spring	42,9 mm (1.69 in)

Torque tightening figures

	Nm	kgf m	lbf ft
Relief valve housing bolts	21	2,1	15

**

https://tractormanualz.com/

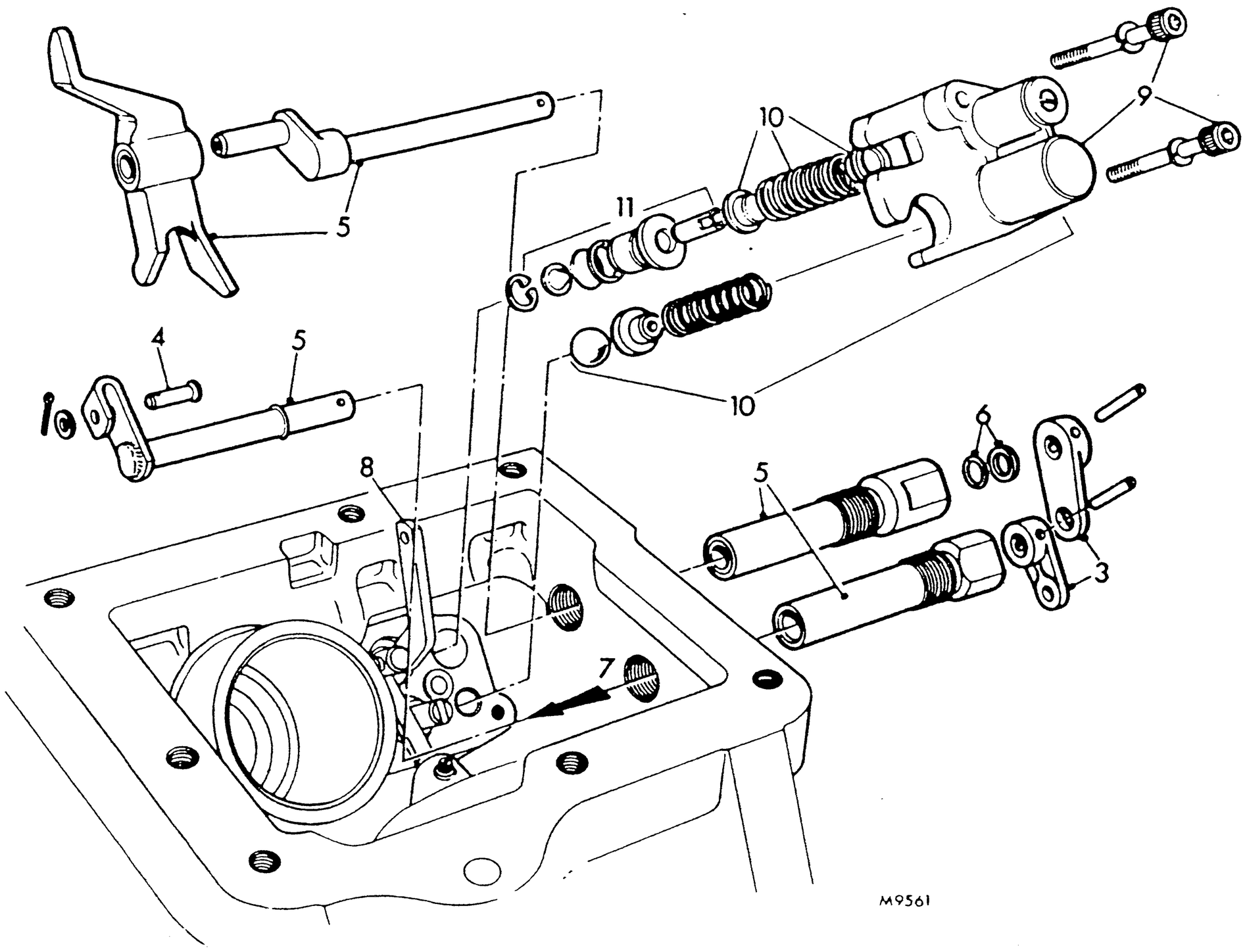

RELIEF VALVE ASSEMBLIES — LATER MODELS

— Overhaul TB53.15.19

Dismantling

1. Remove cross-shaft assembly. TB53.15.06.
2. Remove clevis pins securing control rods to levers.
3. Remove roll-pins and levers.
4. Remove clevis pin securing auxiliary link to shaft.
5. Unscrew bearing housings and remove housings, shafts and main draught control lever noting O-ring on auxiliary cross-shaft.
6. Remove distance piece and O-ring seal from outer end of mainshaft bearing housing.
7. Pack space between control valve and main case with lint-free cloth to prevent components falling into the differential housing.
8. Remove auxiliary cross-shaft link-rod.
9. Remove Allen screws securing cover to relief valve housing.
10. Carefully remove housing cover and collect valve components.
11. Remove high pressure valve seat, then, using a piece of bent wire, withdraw relief valve body. Remove circlip and poppet from housing.

Inspecting

12. Examine ball, poppet and seats for wear and damage; replace parts as necessary.
13. Check springs for free length (see DATA), damage and distortion.

continued

https://tractormanualz.com/

Reassembling

Lubricate all components with clean hydraulic oil as they are refitted.

14. Insert orifice plate (if fitted) to bore of unloader valve.
15. Insert unloader valve into its bore ensuring that the piston ring is not damaged.
    NOTE: The unloader valve bore is chamfered.
16. Insert unloader valve spring, fit a new O-ring to the plug and insert plug.
17. Fit a new O-ring and back-up washer to the high pressure relief valve seat and insert seal into body.
    NOTE: The back-up washer should be nearest the flange.
18. Fit the auxiliary non-return valve using a new O-ring and refit the Allen plug (if removed), sealing it with compound quoted in DATA, noting that there should be at least three threads showing when the plug is tight or it will restrict the flow of oil through the valve body.
19. Insert the valve plungers and fit the spacer over the main plunger spring housing.
20. Hold relief valve housing in position, insert balls and spring/end-cap assemblies.
    NOTE: The high pressure relief valve has the smaller ball, stronger spring and thinner spring end-cap flanges.
21. Fit relief valve retaining cover and secure with bolts, tightening them evenly to torque in DATA.
22. Fit a new valve chest to cylinder O-ring seal.
23. Refit control valve. TB53.15.15.

DATA

Spring free lengths

High pressure relief valve spring	48,8 mm (1.92 in)
Low pressure relief valve spring	42,7 mm (1.68 in)
Auxiliary non-return valve spring	24,1 mm (0.95 in)
Unloader valve spring	24,9 mm (0.98 in)

Special lubricants and compounds

Auxiliary non-return valve Allen plug sealing compound	Loctite 275 and Loctite primer**

Torque tighting figures

	Nm	kgf m	lbf ft
Relief valve housing bolts	21	2,1	15

https://tractormanualz.com/

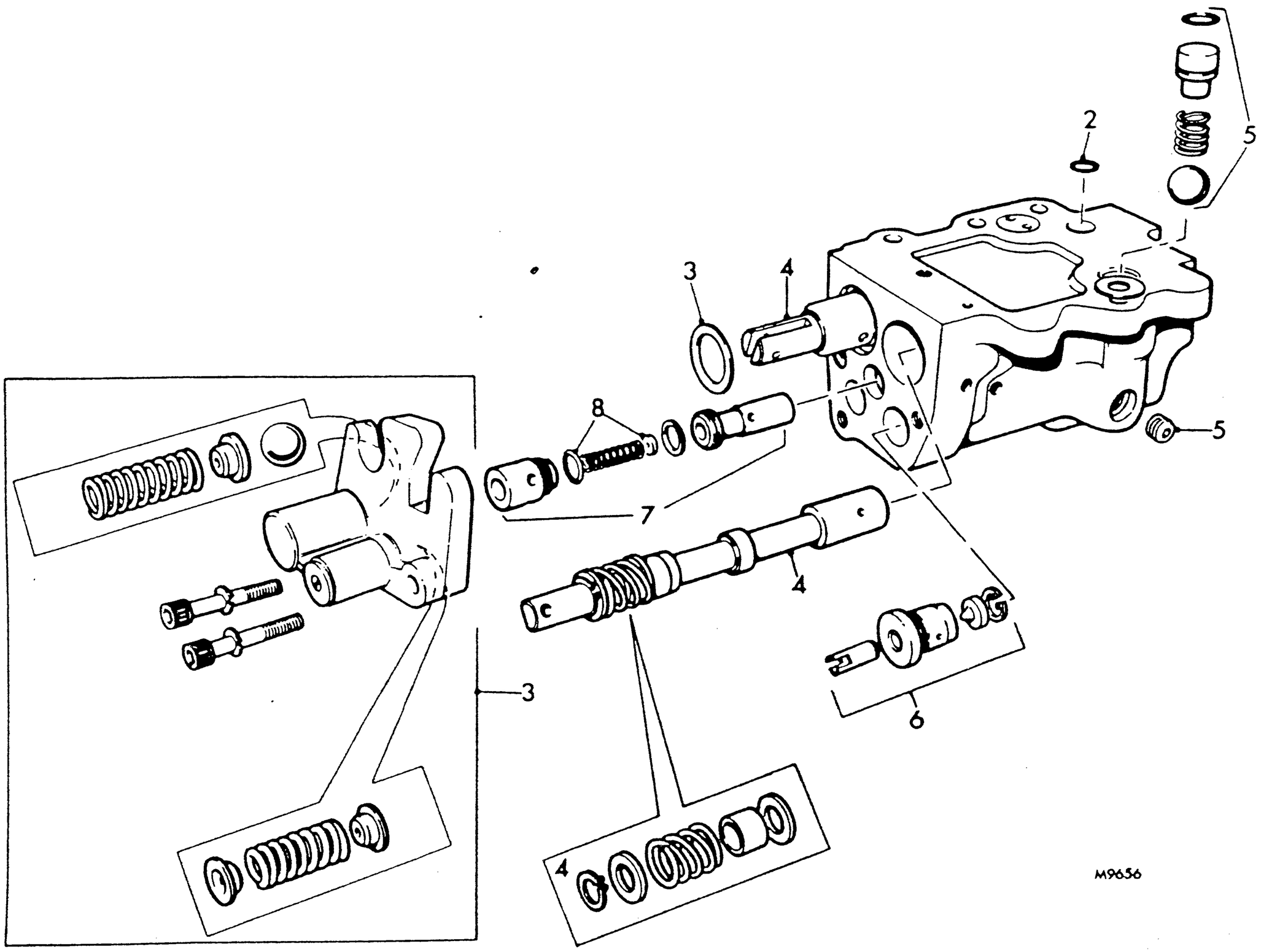

CONTROL VALVE ASSEMBLY—LATER MODELS

— Overhaul TB53.15.16

Dismantling

1. Remove control valve. TB53.15.15.
2. Remove valve to cylinder O-ring seal.
3. Remove relief valve housing cover, collect valve components, and spacer from main valve plunger.
4. Withdraw valve plungers and remove circlip, washers, spring and spacer from auxiliary plunger.
   NOTE: Care must be taken that the valve plungers are not damaged while they are removed.
5. Remove auxiliary non-return valve plug by striking it sharply, causing the reaction of the spring to push it out sufficiently for it to be withdrawn. Alternatively, remove the Allen plug from the side of the valve body and push out the valve.
6. Remove high pressure valve seat, then, using a bent piece of wire, withdraw relief valve housing assembly from valve body. Remove circlip and poppet from housing.
7. Remove unloader valve plug, spring and piston.
8. Remove orifice plate (if fitted) from bore of unloader valve and O-ring from plug.

Inspecting

9. Inspect valve plungers for scoring and damage, insert them in the valve body and check that they move freely through their working range; if either plunger sticks change the valve assembly complete.
   NOTE: If only the auxiliary plunger sticks attempt to rectify it by polishing the lower land.
10. Examine unloader valve piston and piston ring and ensure that the orifice is not blocked; replace parts as necessary. If the bore is damaged change the valve assembly complete.
11. Examine all valve seats, balls and sealing faces.
12. Check free lengths of springs (see DATA) and replace if necessary.
13. Clean all components using a suitable solvent and dry thoroughly.

https://tractormanualz.com/

HYDRAULIC PUMP DRIVE SHAFT

—Remove and refit TB53.15.31

Removing

1. Remove hydraulic pump. TB53.15.29.
2. Remove drive shaft assembly.
3. Remove locknuts and bolts.
4. Remove gear and dowels.
5. Drive out pin and withdraw splined coupling from shaft.

Refitting

6. Examine components, and renew as required.
7. Reverse procedure in 1 to 5, tightening the bolts to the torque in DATA.

DATA

Torque tightening figures

	Nm	kgf m	lbf ft
Hydraulic pump drive gear to shaft bolts	17 to 19	1,7 to 1,9	12 to 14

**

ASSISTOR CYLINDER

— Remove and refit TB53.15.40

Removing

1. Disconnect pipe from cylinder, ensuring cylinder is fully extended.
2. Remove pin and spacer securing cylinder rod to lift-arm.
3. Remove pin securing cylinder to axle anchor bracket, noting spacers.

Refitting

4. Reverse procedure 1 to 3, noting:
   a. Clean and grease the cylinder ball ends.
   b. Ensure that larger spacer is fitted against inner face of lower ball end.
   c. Set lift-arms in uppermost position, locked with locking catch.
   d. Start engine and set quadrant lever to full lift so that relief valve operates (audible).
   e. Adjust rod end length until top pin fits easily into lift-arm, then shorten rod end by one half-turn.
   f. Move quadrant lever out of full lift so that relief valve stops operating.
   g. Lock rod end length position with locknut. Fit ram to lift-arm, noting spacer on inner side of ball end.

https://tractormanualz.com/

** ASSISTOR CYLINDER

— Overhaul TB53.15.41

Dismantling

1. Remove assistor cylinder. TB53.15.40.
2. Support cylinder in vice, depress to the fully retracted position and remove rod end.
3. Remove wiper seal, noting its position.
4. Depress wire locking ring through hole in cylinder tube and press forward out of retaining groove.
5. Lift cylinder into vertical position and remove retaining ring.
6. Remove rod seal, noting its position.
7. Remove circlip.
8. Lift cylinder to its vertical position, tapping the cylinder tube to remove bearing.

Inspecting

9. If the piston rod is damaged in any way, is slightly or severely bent or has dented or pitted chrome, the complete cylinder must be replaced.

Reassembling

NOTE: Absolute cleanliness is essential when assembling the cylinder.

10. Reverse procedure 1 to 8 noting:
    a. Fit new seals to the positions noted when dismantling. **

HYDRAULIC UNIT OIL STRAINER

—Remove and refit TB53.20.02

Removing

1. Remove hydraulic lift unit. TB53.15.01.
2. Remove the two nuts and spring washers securing strainer housing to retaining bracket.
3. Push strainer housing slightly toward front of tractor.
4. Remove nuts and spring washers securing bracket and remove brackets and strainer housing.
5. Unscrew securing bolt, remove end plate and withdraw spring and by-pass valve from bolt.
6. Withdraw strainer from housing.
7. Clean all components in a suitable solvent and dry thoroughly.

Refitting

8. Reverse procedure 1 to 7, ensuring components are correctly assembled, noting:
    a. Always renew the suction pipe seal.
    b. Tighten end plate securing bolt to torque in DATA.

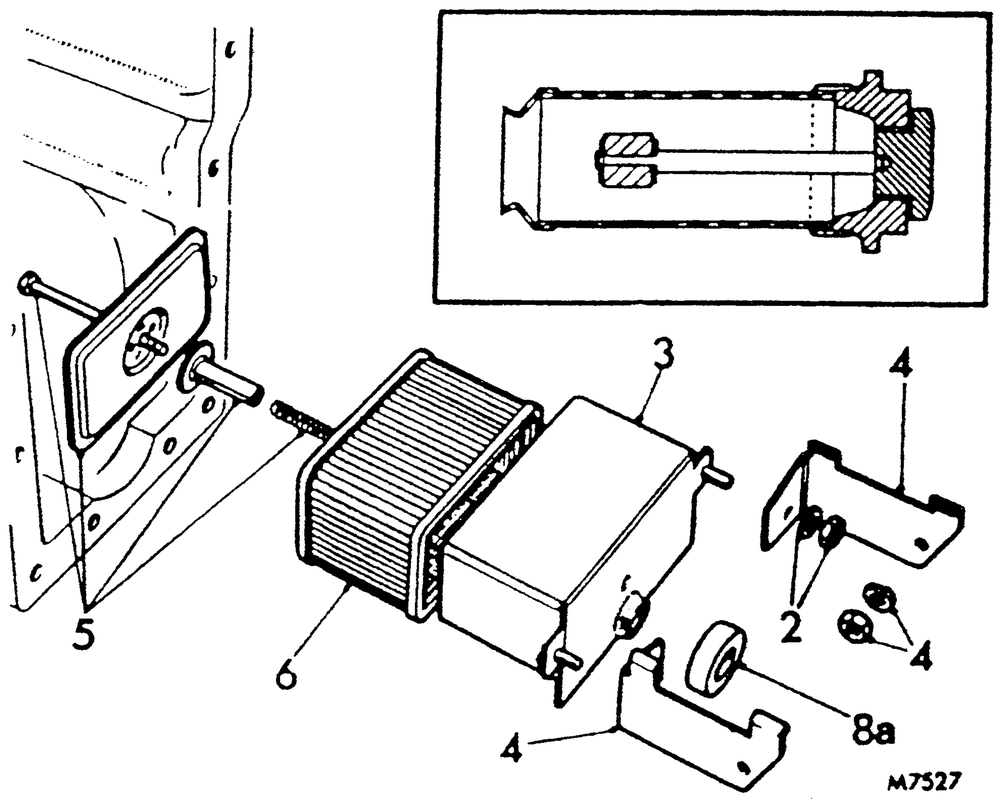

DATA

Torque tightening figures	Nm	kgf cm	lbf in
Oil strainer end-plate bolt	0,6 to 0,9	6 to 9	5 to 8

https://tractormanualz.com/

VALVE CHEST TO CYLINDER FILTER COMPLETE

—Remove and refit TB53.20.04

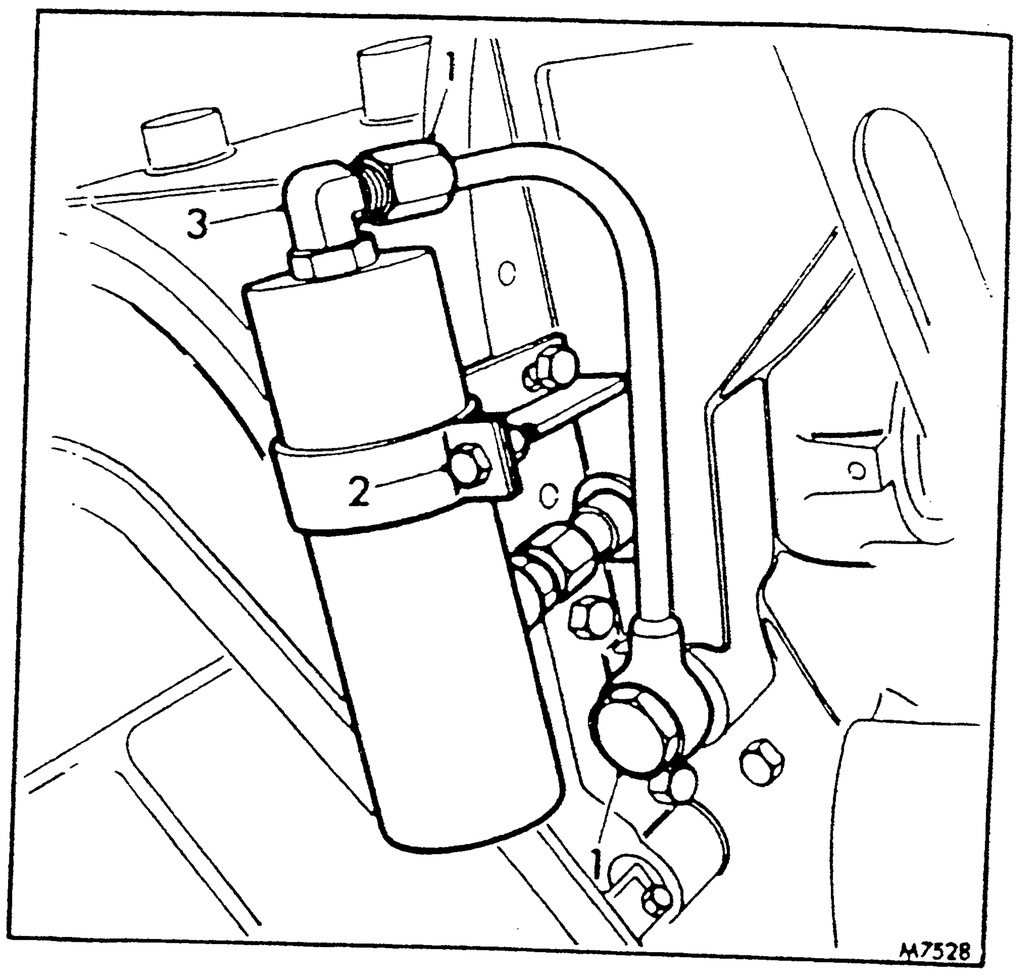

Removing

1. Disconnect the two unions and remove the bolt securing the bracket to the hydraulic unit.
2. Remove bracket clamp bolt and separate clamp and filter.
3. Remove elbow union, spring and non-return valve poppet.
4. Remove union from body.

Refitting

5. Reverse procedure in 1 to 4, leaving the clamp bolt and elbow union locknut slack until the complete unit is fitted.

VALVE CHEST TO CYLINDER FILTER ELEMENT

—Remove and refit TB53.20.05

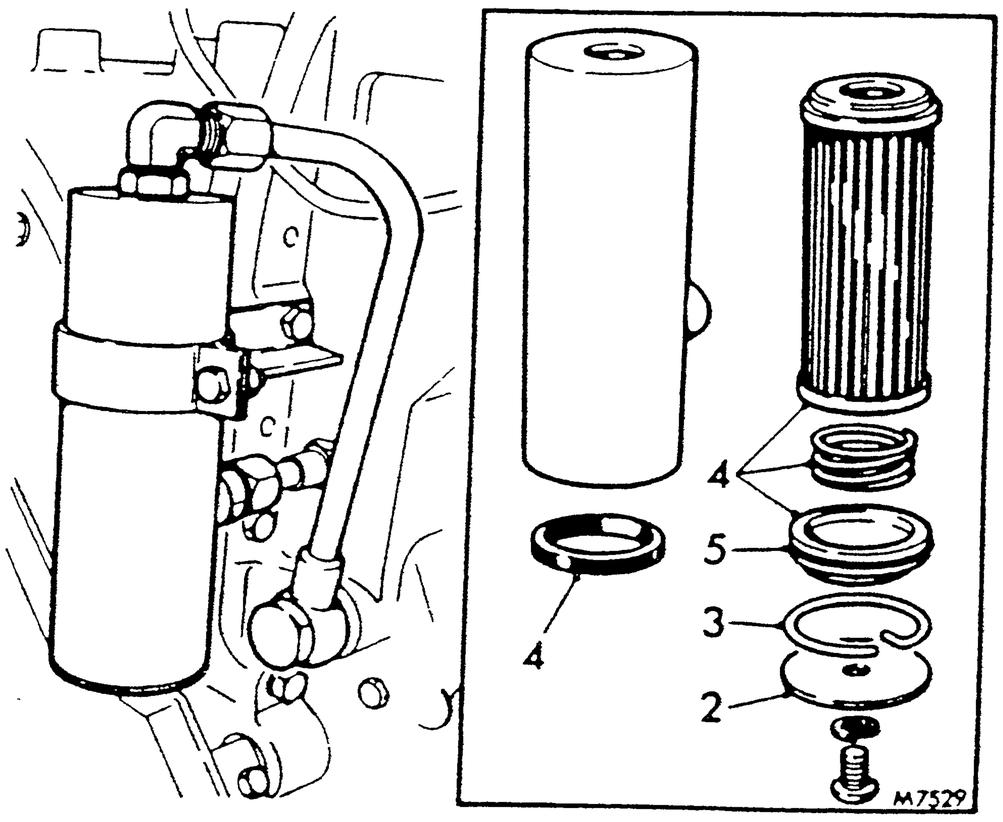

Removing

1. Position drip tray under filter.
2. Remove screw, washer and cover plate.
3. Pull ring from its groove in the bore.
4. Fit a suitable bolt to the thread in the plug, pull the plug from the body and collect the spring, element and sealing ring.
5. Remove O-ring and back-up washer from plug.

Refitting

6. Reverse procedure 1 to 5, ensuring all parts are correctly positioned.

https://tractormanualz.com/

VALVE CHEST TO CYLINDER FILTER – NON-RETURN VALVE

–Remove and refit TB53.20.06

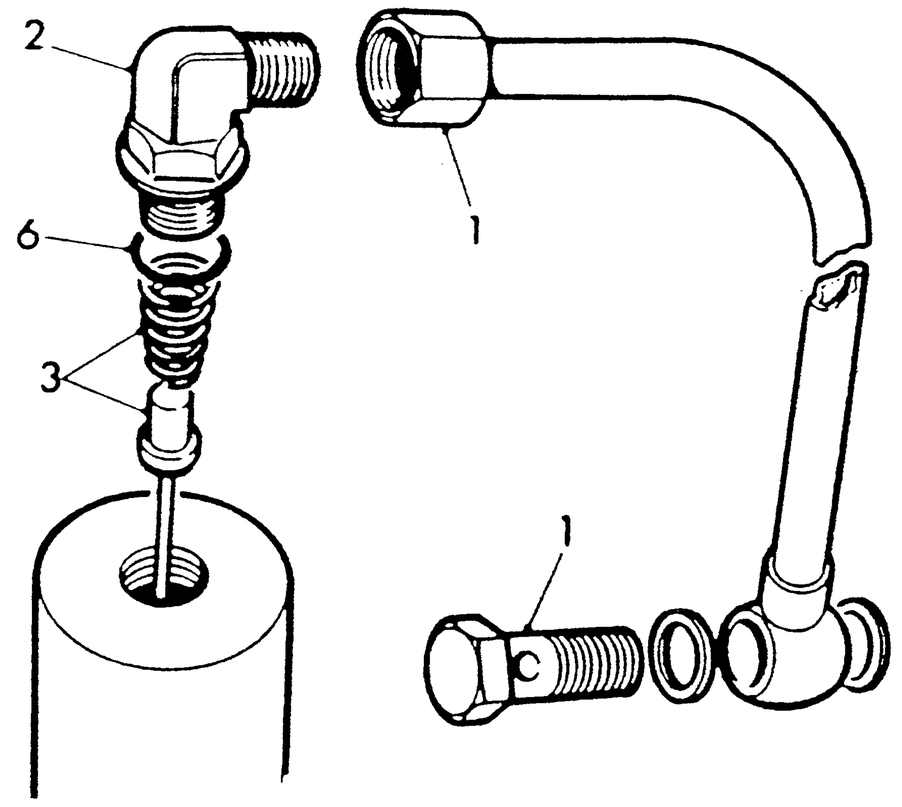

M7530

Removing

1. Release elbow union and banjo bolt to remove pipe.
2. Remove elbow union from top of filter.
3. Remove spring and non-return valve poppet.
4. Inspect components and replace as required, noting:
   a. Ensure poppet sealing face is not damaged or embedded with dirt and that its seat in the body is satisfactory.
   b. Compare the spring with a new one, and replace as required.

Refitting

5. Refit non-return valve poppet and spring.
6. Refit elbow union, ensuring the O-ring is serviceable, but do not tighten locknut.
7. Refit pipe to elbow and banjo union.
8. Tighten elbow union locknut.

BY-PASS FILTER ELEMENT

–Remove and refit TB53.20.10

NOTE: This filter is fitted horizontally on later models.

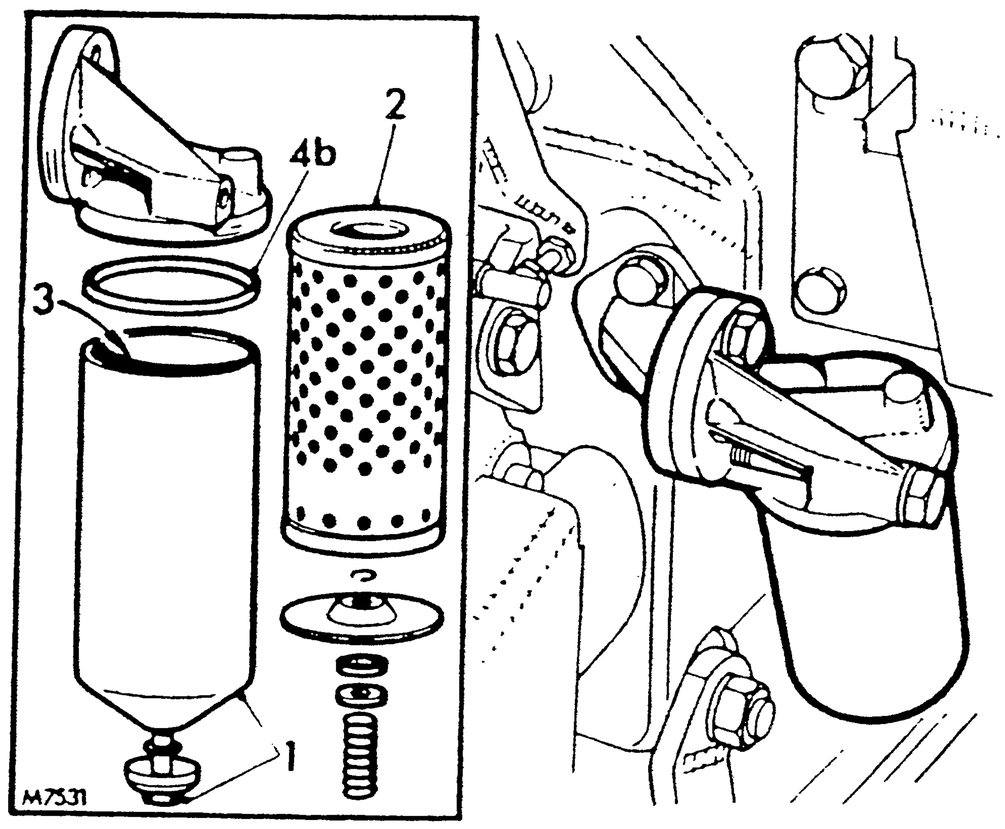

Removing

1. Release central bolt and remove bowl.
2. Remove and discard the filter element.

Refitting

3. Clean the bowl using a suitable solvent and dry thoroughly.
4. Reassemble by reversing procedure in 1 and 2, noting:
   a. If the components in the bowl have been removed, ensure that they are reassembled in their correct order.
   b. Always renew the bowl sealing ring in the filter head.

TB53.20.06
TB53.20.10

https://tractormanualz.com/

FAULT FINDING
Chart 1
Auxiliary Control Fault

Auxiliary control lever stiff without engine running

- Auxiliary control spindle seized in support tube, see TB53.30.09
- Control lever partial seizure. Disconnect control rod and check
  - Rectify
- Auxiliary plunger partial seizure in valve body
  - Remove valve body and cylinder and drain oil, see TB53.15.15. Auxiliary plunger should drop under its own weight
    - Valve body distorted
      - Ensure that the correct shims are fitted between valve body and cylinder. Check torque of bolts
    - Plunger scored
      - Remove plunger and polish lower land, see TB53.15.16
    - Detent washers sticking
      - Remove plunger and rectify, see TB53.15.16
    - Renew valve body if fault cannot be rectified

Slow to lower

- Weak limiting valve spring in base of plunger
- Auxiliary linkage out of adjustment, see TB53.10.05

Fails to lower

- Equipment fault or safety latch engaged
- Dowty coupling incorrectly connected or equipment valve closed

Slow lift
Low lift capacity

- Check oil level, see TB10
- Check that equipment valves are fully open
- **Does relief valve operate when 'LIFT' selected?**
  - Yes
    - Check and adjust hydraulic pressure, see TB53.10.03
      - Correct pressure cannot be obtained
        - High pressure relief valve failed, see TB53.15.19
      - **Pressure correct but relief valve still operates when 'LIFT' selected**
        - Load too heavy
        - Equipment fault
  - No
    - **Does the relief valve operate when the main hand lever is moved 25 mm (1 in) into the 'DRAUGHT' control quadrant**
      - Yes
        - Auxiliary linkage out of adjustment, see TB53.10.05
        - Connection between valve body and auxiliary tapping failed, see TB53.15.15
      - No
        - Check hydraulic pressure, see TB53.10.01
          - Zero pressure
            - Pump drive failed, see TB53.15.29
            - Pump to valve pipe or connection failed, see TB53.15.29
          - 100-2000 lbf/in²

Remove lift unit (TB53.15.01) and:

1. Check suction filters for blockage or damage, see TB53.20.02.
2. Check plug in the upper side face of the control valve, is not screwed in too far restricting the oil flow, there should be about three threads of the plug showing. Remove if required and refit using Loctite Hydraulic Seal.
3. Remove pump to valve pipe and examine for damage or incorrect sealing.
4. Overhaul pump, see TB53.15.30.

If no faults are found, refit the lift unit (TB53.15.01), overhaul the relief valves (TB53.15.19) and check and adjust the hydraulic pressure (TB53.10.03)

Auxiliary linkage out of adjustment, see TB53.10.05

Fails to lift

- Check oil level, see TB10
- Check if couplings are correctly connected and equipment valves are open

Linkage failed or out of adjustment, see TB53.10.05, TB53.30.09

Auxiliary control lever moves but has no effect

Auxiliary control lever difficult or impossible to move from neutral with engine running but easy to move with engine stopped

- Pressure too high on auxiliary detent washers
  - Cut one coil from the low pressure relief valve spring, see TB53.15.19

FAULT FINDING
Chart 2
Position/Draught Control Fault

- **Unit cycles faster than once every 5 sec. in transport or 'position' control**
  - See Chart 3
- **Failure to lift**
  - Check aux. lever is not fixed in 'LIFT'
  - Check oil level and that the P.T.O. clutch is not disengaged
  - Check control adjustments, see TB53.10.05
  - **Does relief valve operate when main lever is at full 'LIFT'?
    - No
      - **With auxiliary tapping plugged and aux. lever in 'LIFT' does relief valve operate?**
        - Yes
          - Overhaul control valve and lift cylinder, see TB53.15.16, TB53.15.12. NOTE: Examine all pipes and seals when refitting lift cylinder/control valve assembly and renew as required. Ensure all unions are tight.
        - No
          - Is pump noisy?
            - Yes
              - Pump fault, see TB53.15.30
              - Suction filter or pipe restricted, see TB53.20.02
            - No
              - Check pressure, see TB53.10.01
                - Zero pressure
                  - Pump drive or pump to valve pipe failed, see TB53.15.29
                - Low pressure
                  - Check high pressure relief valve, see TB53.15.19
                  - Check pump to valve pipe, see TB53.15.29
    - Yes
      - Check and adjust hydraulic pressure, see TB53.10.03
        - Correct pressure cannot be obtained
          - High pressure relief valve failed, see TB53.15.19
        - **Pressure correct but relief valve still operates when 'LIFT' selected**
          - Load too heavy
- **Links creep up**
  - Overhaul or replace non-return valve, see TB53.20.06
- **Intermittent loss of 'position' control**
  - Check oil level and control adjustments, see TB10, TB53.10.05
  - Main lever leaving cross-shaft cam due to excessive end-float. Reduce cross-shaft end-float to within 0.023 in (0.57 mm) and replace main lever and spindle, see TB53.30.09
- **Slow lift. Low lift capacity**
  - Check oil level and control adjustments, see TB10, TB53.10.05
  - **Does relief valve operate when lifting?**
    - No
      - **With auxiliary tapping plugged and aux. lever in 'LIFT' does relief valve operate**
        - Yes
          - **Go to Chart 3 Lift heavy implement and stop engine**
        - No
          - Draught control cam sticking, see TB53.15.22
          - Main valve plunger sticking, see TB53.15.16
          - Main lever bent or misaligned, see TB53.30.09
    - Yes
      - Plough shares or implement points worn or broken
      - Belleville pack broken, see TB53.15.25
      - Try top link in alternative position
- **Implement slow to lower**
  - Control adjustments incorrect, see TB53.10.05
  - Lift cylinder seized, see TB53.15.12
  - Partial mechanical failure or seizure of main plunger, see TB53.15.16
  - Limiting valve in end of main spool faulty
    - Replace parts as necessary and refit plug with Loctite Hydraulic seal
- **'Draught' control fault**
  - Check correct service selected
  - Check oil level and control adjustments, see TB10, TB53.10.05
    - Erratic operation or no response
      - Draught control cam sticking, see TB53.15.22
    - Implement fails to work shallow
      - Try top link in alternative position
      - Check Belleville washer pack pre-load and ensure anchor bracket pin is not seized, see TB53.15.25
      - Draught control cam sticking, see TB53.15.22
      - Main valve plunger sticking, see TB53.15.16
      - Main lever bent or misaligned, see TB53.30.09
    - Implement fails to work deep
      - Plough shares or implement points worn or broken
      - Belleville pack broken, see TB53.15.25
      - Try top link in alternative position
- **Unit never cycles in 'position' control**
  - Main plunger sticking or unloader valve fault, see TB53.15.16

FAULT FINDING
Chart 3

From Chart 2 Excessive cycling

Check oil level, see TB10

Carefully run through and correct all adjustments, see TB53.10.05

Is pump noisy?

No

Check type of transmission oil

Non-approved oil

Change oil, see TB10

Approved oil

Lift heavy implement, stop engine

Implement holds

Remove unloader valve, see TB53.15.20

** Unloader valve orifice blocked **

Blow out with air

** Unloader valve piston ring broken or worn **

Renew piston ring or renew control valve assembly if bore is damaged

** Unloader valve piston ring stuck in groove **

Remove and check

Renew control valve assembly if fault persists, see TB53.15.15

Implement drops

Check amount of oil on top of lift cylinder piston

Excessive oil on top of piston

Renew lift cylinder piston rings, see TB53.15.11

Minimal oil on top of piston

Overhaul non-return valve, see TB53.20.06

Overhaul lift cylinder, see TB53.15.12
NOTE: Examine all pipes and seals when refitting lift cylinder/control valve assembly and renew as required. Ensure all unions are tight

Renew control valve assembly if fault persists, see TB53.15.15

Yes

Suction filter restricted, see TB53.20.02

** From Chart 2 Slow lift Low lift capacity **

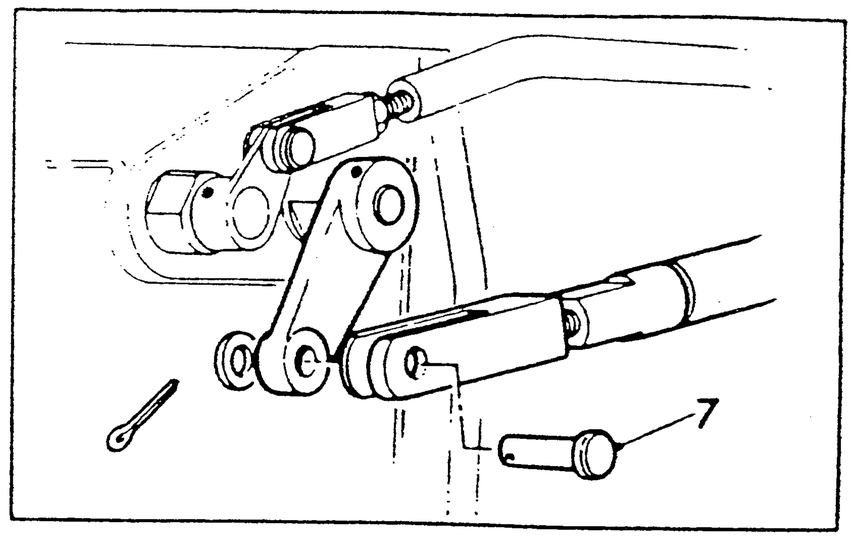

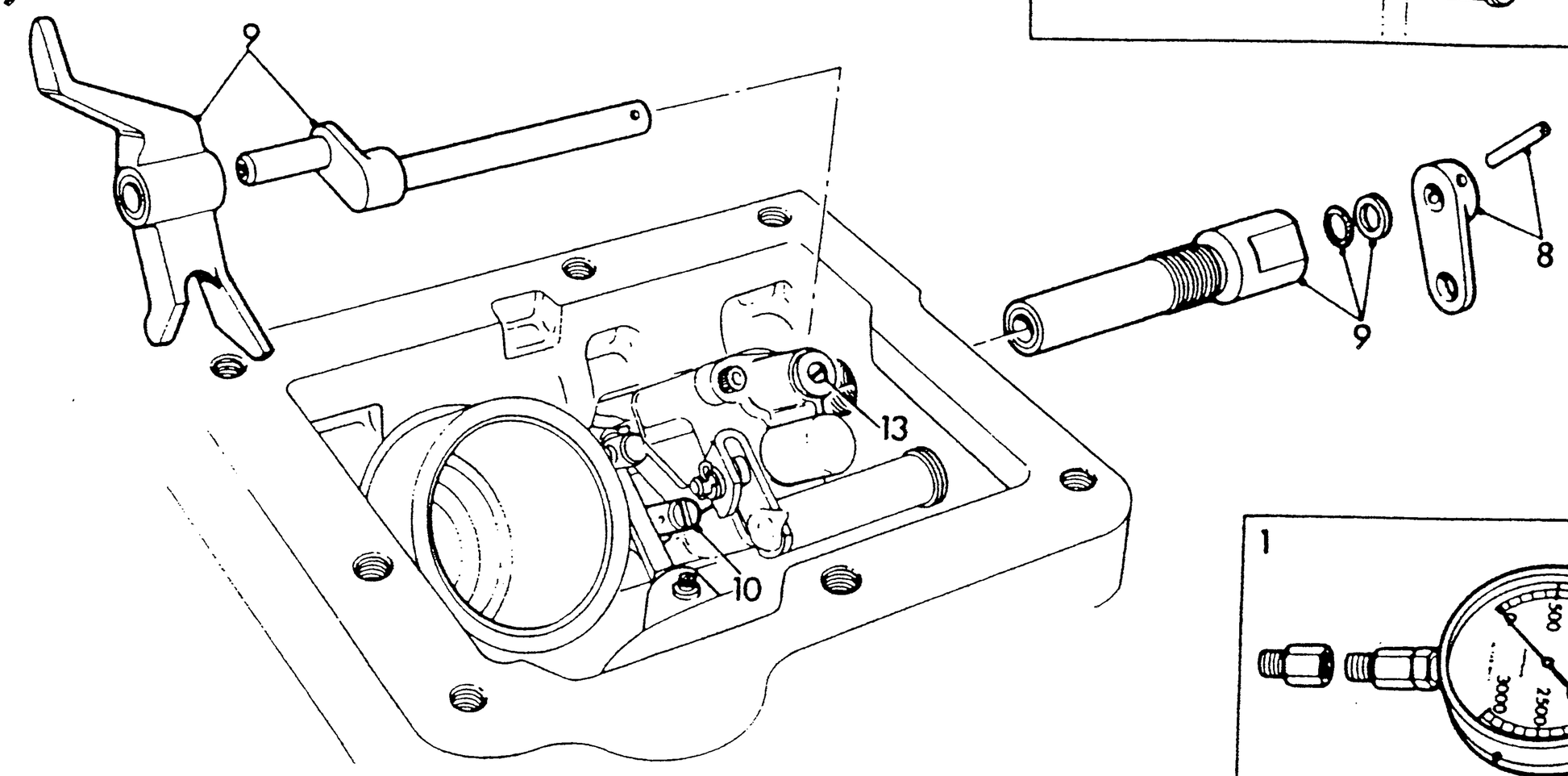

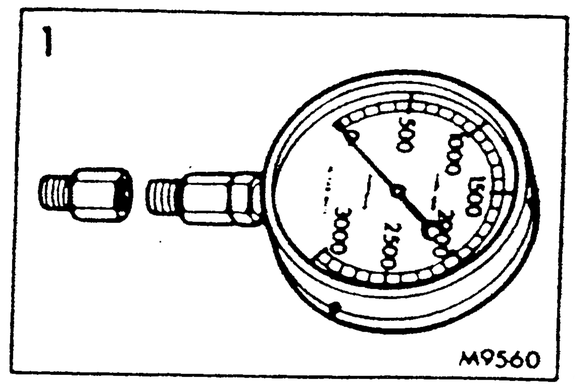

HYDRAULIC PRESSURE

— Check 1-5, 17 TB53.10.01

— Check and adjust 1-17 TB53.10.03

Service tools: 18G 548, 18G 548 A (2 off, see operation 2)**

Checking

NOTE: This check should be carried out directly after a work period, while the oil is hot.

** 1. When an external service valve (optional) is fitted connect adaptor 18G 548 A and pressure gauge 18G 548 to one of the four external service couplings, run engine at idling speed, move control lever to give a gauge reading, then increase engine speed to maximum on-load speed and note the maximum pressure.

NOTE: If the maximum pressure is not within the figures stated in DATA, the external services relief valve or pump is faulty, see chart in TB53.15.14.

2. Remove trailer tipping/auxiliary coupling and fit two adaptors 18G 548 A and pressure gauge 18G 548 to the auxiliary tapping.

NOTE: If suitable adaptors are available the gauge may be coupled directly to the trailer tipping/auxiliary coupling, but adaptor 18G 548 A (1 off) must still be used to prevent damage to the gauge.

3. Run engine at idling speed and lock the auxiliary control lever in the 'LIFT' position.
4. Increase engine speed to maximum on load speed and note the pressure reading, see DATA.
5. Stop engine.

Adjusting

6. Remove cross-shaft. TB53.15.06.
7. Remove clevis pin securing main control rod to lever.
8. Remove roll-pin and lever.
9. Unscrew spindle bearing housing and withdraw housing, spindle and main lever, noting distance piece and O-ring in housing.
10. Pull main valve plunger fully upward against spring force and secure it using strong wire.
11. Fit a stay between the piston and the lip of the hydraulic casing to prevent the piston being pushed out of the cylinder by low pressure oil.
12. Start the engine, run it at idling speed and ensure the auxiliary control lever is secured in the 'LIFT' position.**

continued

https://tractormanualz.com/

**13. Increase engine speed to maximum on-load speed and adjust pressure, see DATA; rotate the screw clockwise to increase pressure or anti-clockwise to decrease pressure, noting that the screw is staked in position.

NOTE: If pressure cannot be increased to the value required, see Fault Finding Chart — Low lift capacity — Auxiliary control.

14. **When optional external service valve is not fitted:

Increase the engine speed to maximum on-load speed and adjust pressure, see DATA; rotate screw clockwise to increase pressure or anti-clockwise to decrease pressure noting that the screw is staked in position.

When external service valve is fitted: Rotate screw anti-clockwise until pressure is less than pressure determined in operation 1 then screw clockwise until the pressure equals that determined in operation 1, noting that the screw is staked in position.

15. Stake the screw in position.
16. Stop engine and reverse procedure in 6 to 11.
17. Remove pressure gauge and adaptors and refit the trailer tipping/auxiliary coupling.**

DATA

Hydraulic pressure check

Maximum on-load engine speed:	
245	2250 rev/min
**All models except 245	2200 rev/min**

****Hydraulic system**

Relief valve blow-off pressure (when optional external service valve is not fitted)	17,9 MN/m² (182 kgf/cm², 2600 lbf/in²) at maximum on load speed
External services relief valve blow-off pressure (determined in operation 1)	17,2 to 17,6 MN/m² (176 to 179 kgf/cm², 2500 to 2550 lbf/in²) at 2100 rev/min engine speed.**

https://tractormanualz.com/

HYDRAULIC CONTROLS

—Adjust

TB53.10.05

Adjustment of main system

1. With the engine stopped, slacken the locknut and adjust the main control rod to its shortest length, noting that the rod has both left- and right-hand threaded ends to enable it to be adjusted as a turnbuckle.
2. Remove cover tube, unlock the draught sensing lever limiting locknuts and turn them clockwise to fully depress the lever.
3. Remove actuator pin.
4. Start the engine, run it at idling speed and move the main control lever to its mid 'LIFT' detent position (vertical).
5. Lengthen control rod until the lift-arms reach their full lift position and the relief valve operates (audible).
6. Back off control rod 1.5 turns and lock with nut.
7. Move the main control lever forward 25 mm (1 in) from the mid 'LIFT' detent position into 'DRAUGHT' control; the relief valve should now operate again.
8. Back off the draught sensing lever limiting locknuts until the relief valve stops operating, then tighten until the relief valve just starts to operate again. Tighten locknuts together, ensuring that the inner one is not allowed to turn, fit cover tube, then stop the engine.
9. Refit actuator pin.
10. Slacken locknut and adjust actuator screw until there is a clearance of 2,54 mm (0.1 in) between the draught sensing lever and the plain washer, then tighten the locknut.
11. Check adjustment of main system by positioning the main control lever within 19 mm (0.75 in) of the bottom of the draught control quadrant and depressing the draught sensing lever fully inward; the lift arms should lift.

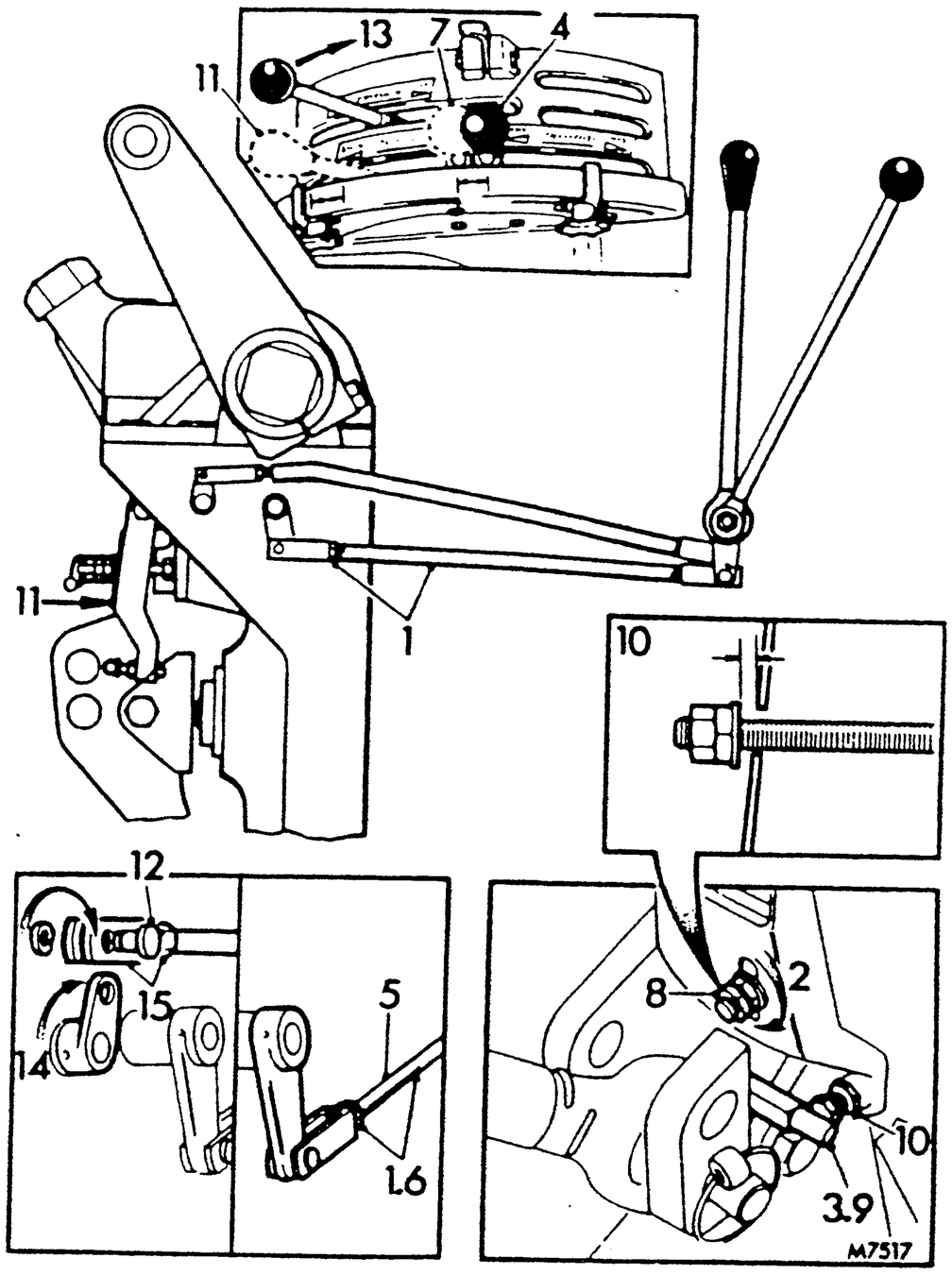

Adjustment of auxiliary service

12. Remove clevis pin to detach control rod from auxiliary operating lever.
13. Move auxiliary control lever rearward to its full 'LIFT' position.
14. Move auxiliary operating lever fully forward.
15. Adjust length of control rod by slackening locknut and rotating clevis to align holes in clevis and lever.
16. Refit clevis pin and tighten locknut.

https://tractormanualz.com/

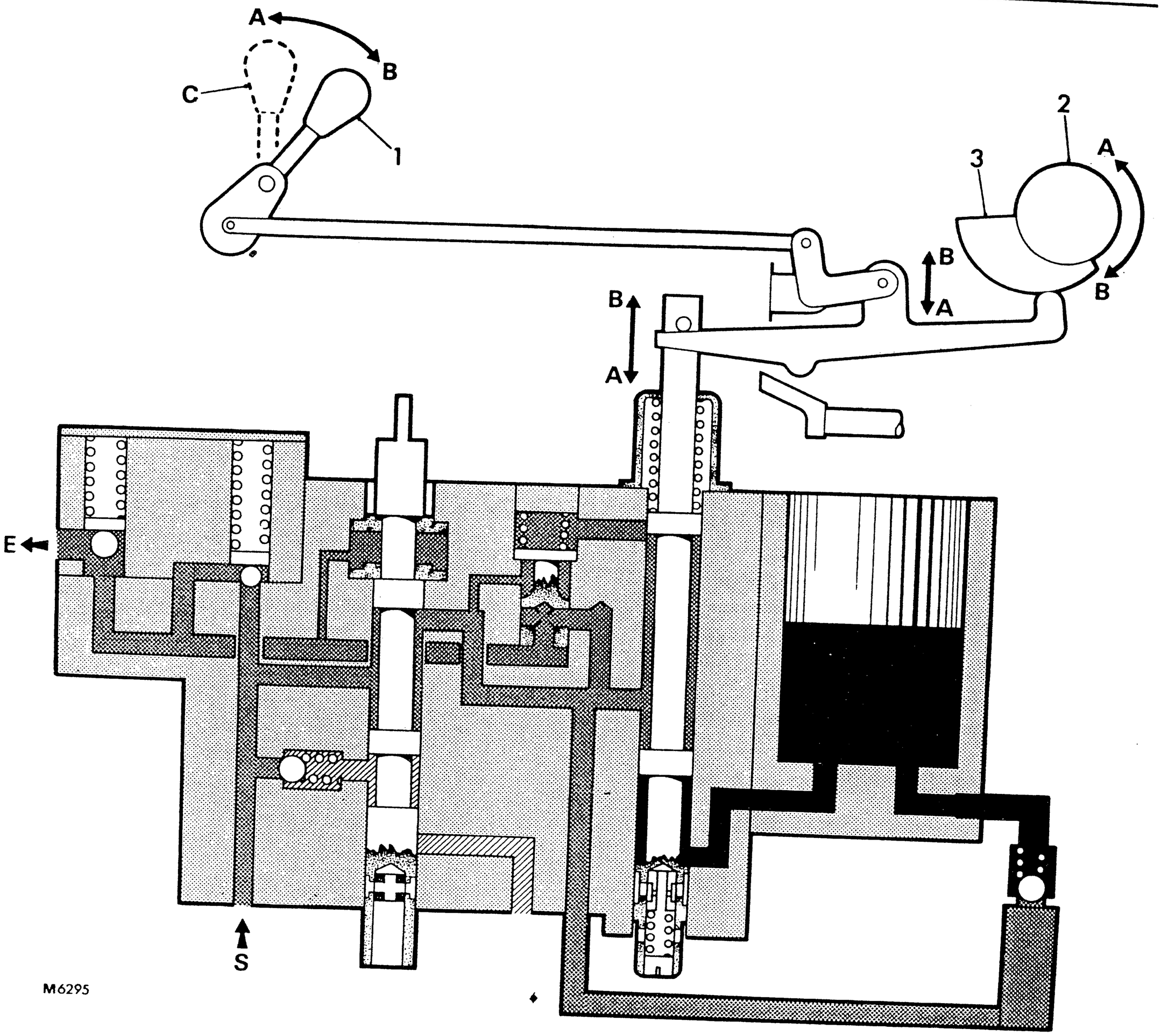

FLOW DIAGRAM – POSITION CONTROL

A. Lift
B. Lower
C. Full lift position

E. Exhaust
S. Supply

1. Hand lever
2. Cross-shaft
3. Position control cam

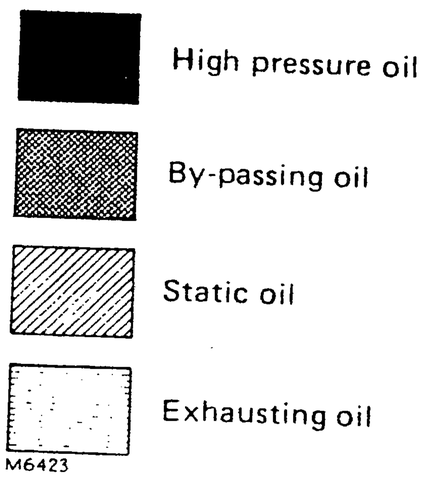

https://tractormanualz.com/

MAIN LIFT

Oil from the supply is blocked from entering the low pressure circuit and passes through the external filter and non-return valve to the cylinder.

'LIFT' position, inset X. The control land of the main spool determines the position of the unloader valve. In the 'LIFT' position of the main spool, oil from the upper chamber above the unloader valve is able to evacuate, and the unloader valve is moved upwards against the spring by low pressure oil acting in the middle and lower chambers. As the unloader valve cuts off the flow to the low pressure circuit and causes oil to flow through the non-return valve and filter to the cylinder, high pressure acts in the middle chamber and holds the unloader valve lifted against the spring.

'HOLD' and 'LOWER' position, inset Y. Moving the main spool toward the lowering position allows cylinder pressure to reach the upper chamber causing the unloader valve to be forced downward and allowing oil from the supply to be passed into the low pressure circuit. The bleed hole prevents random operation of the unloader valve due to leakage when the control land overlaps the control port.

https://tractormanualz.com/

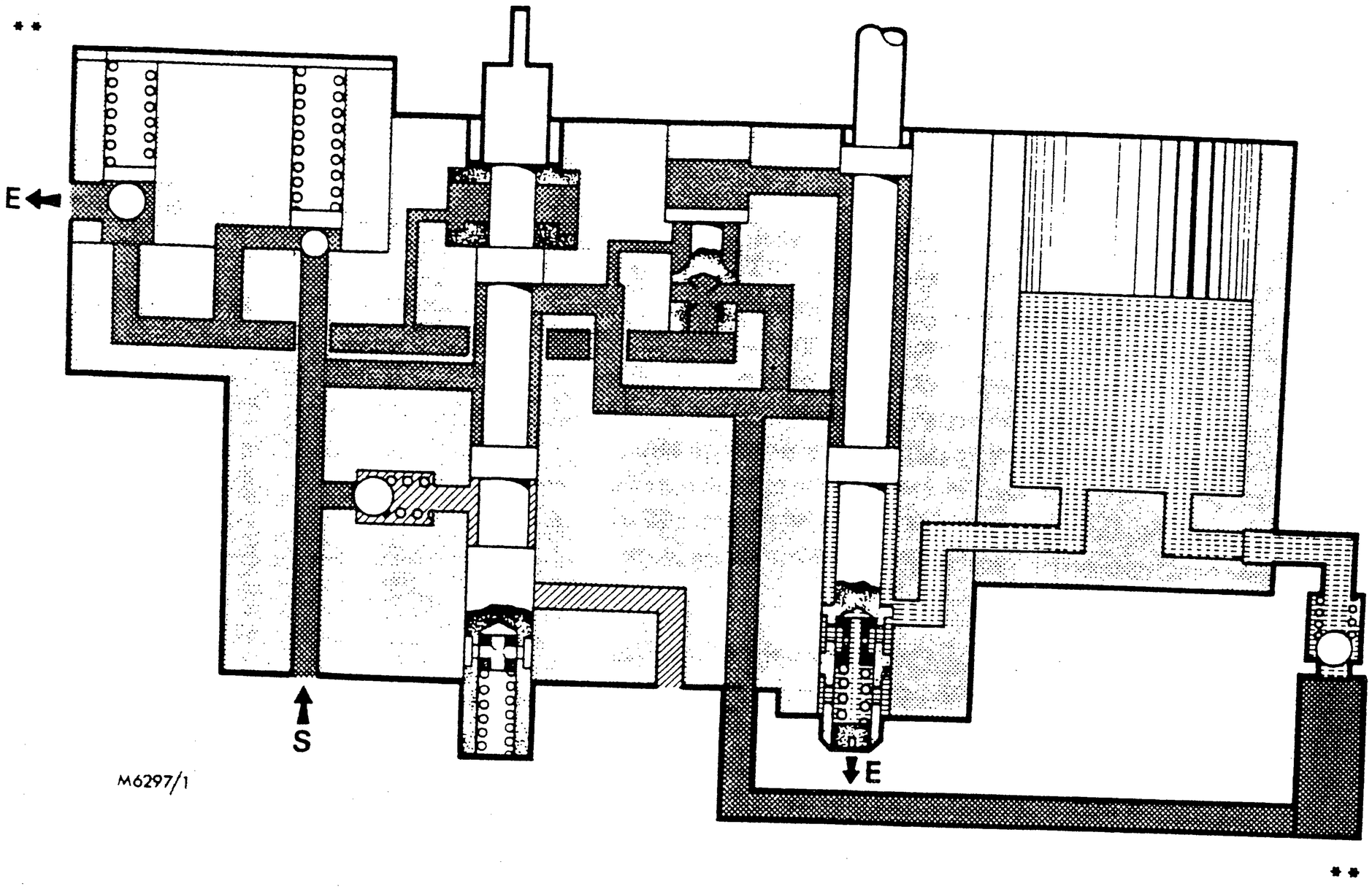

FLOW DIAGRAM – MAIN LOWER

E. Exhaust

S. Supply

MAIN LOWER

The lift cylinder exhausts to the sump through the flow control valve in the base of the spool.

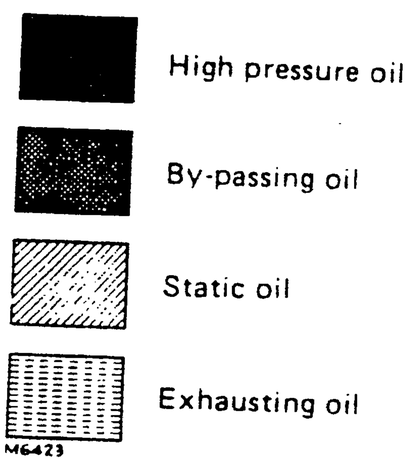

https://tractormanualz.com/

MAIN LIFT

Oil from the supply is blocked from entering the low pressure circuit and passes through the external filter and non-return valve to the cylinder.

'LIFT' position, inset X. The control land of the main spool determines the position of the unloader valve. In the 'LIFT' position of the main spool, oil from the upper chamber above the unloader valve is able to evacuate, and the unloader valve is moved upwards against the spring by low pressure oil acting in the middle and lower chambers. As the unloader valve cuts off the flow to the low pressure circuit and causes oil to flow through the non-return valve and filter to the cylinder, high pressure acts in the middle chamber and holds the unloader valve lifted against the spring.

'HOLD' and 'LOWER' position, inset Y. Moving the main spool toward the lowering position allows cylinder pressure to reach the upper chamber causing the unloader valve to be forced downward and allowing oil from the supply to be passed into the low pressure circuit. The bleed hole prevents random operation of the unloader valve due to leakage when the control land overlaps the control port.

https://tractormanualz.com/

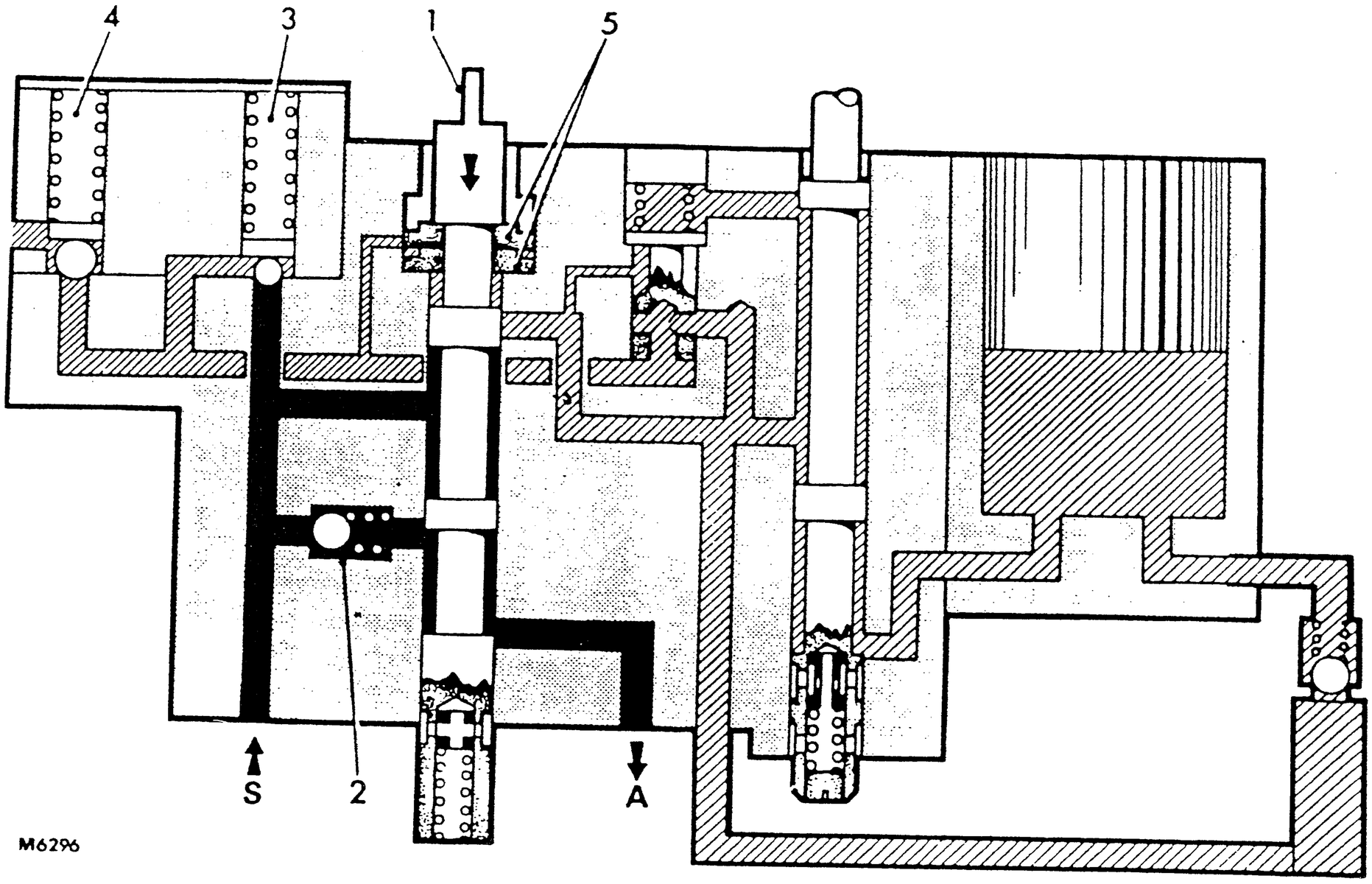

FLOW DIAGRAM – AUXILIARY LIFT

A. To auxiliary tapping
S. Supply

1. Auxiliary plunger
2. Non-return valve
3. High pressure relief valve
4. Low pressure relief valve
** 5. Detent pistons–early models only **

AUXILIARY LIFT

** Oil is prevented from entering the main circuit by the top land of the auxiliary plunger and diverted via the auxiliary non-return valve to the auxiliary service. On early models, as illustrated, when the service pressure is high enough to open the main relief valve the pressure between the detent pistons increases, forcing them apart and returning the plunger to the 'hold' position. On later models (not illustrated) a spring arrangement returns the auxiliary plunger to the 'hold' position when the hand lever is released.**

An implement with its own hydraulic controls, or a hydraulic motor, may be supplied with a constant flow of oil through the auxiliary service by locking the hand lever in the full 'LIFT' position, the oil being returned to the tractor via the filler/return plug on the cross-shaft housing.**

NOTE: With the auxiliary hand lever at 'LIFT', the main hand lever can be used to lower or hold the lift arms but not to lift.

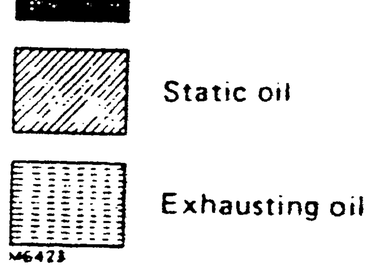

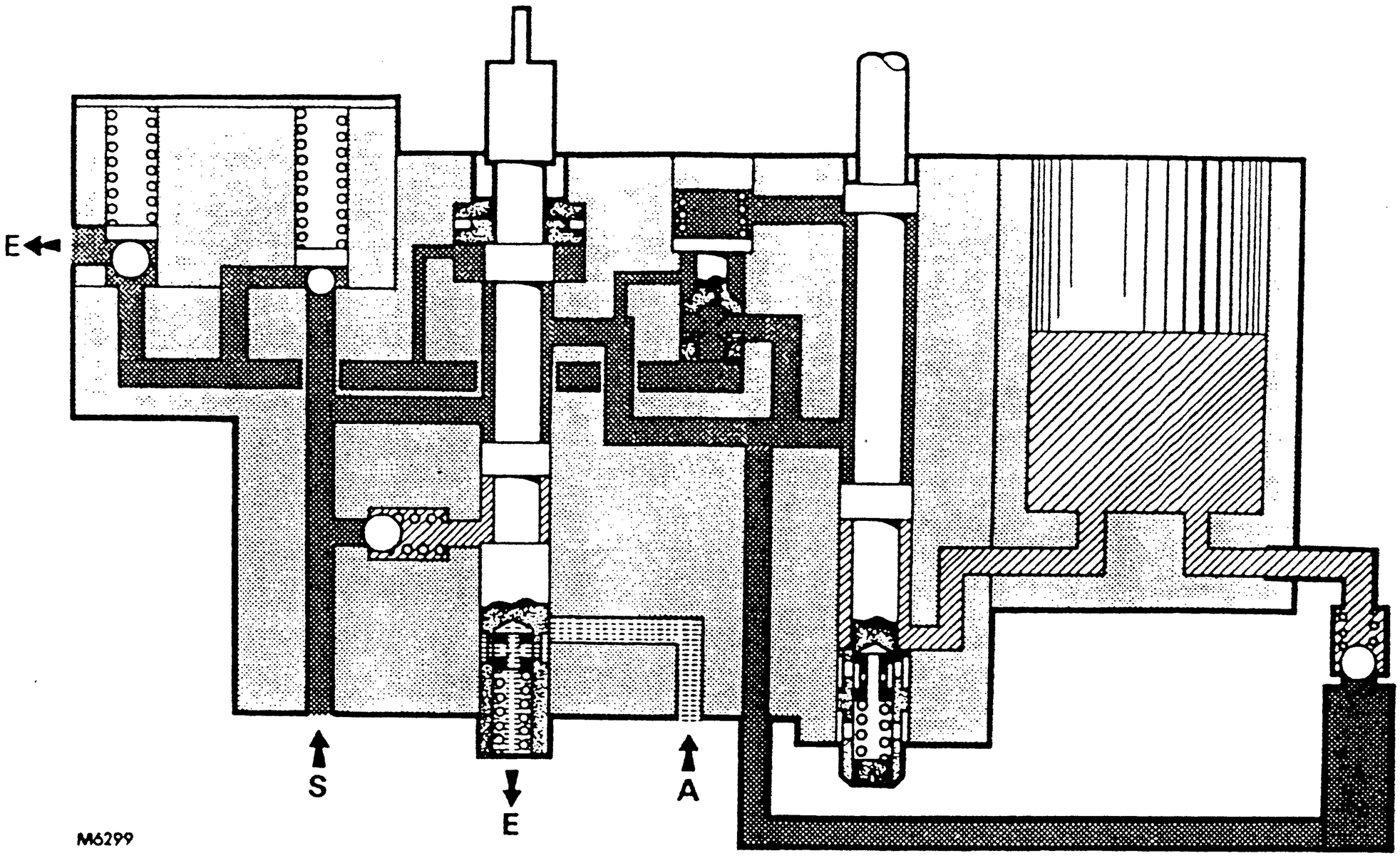

FLOW DIAGRAM – AUXILIARY LOWER

A. From auxiliary E. Exhaust S. Supply

AUXILIARY LOWER

** The auxiliary service exhausts to the sump through the bore of the plunger and the flow control valve incorporated in the bore limits the speed of descent of the implement irrespective of the applied load. On later models (not illustrated) a spring arrangement returns the auxiliary plunger to the 'hold' position when the hand lever is released.**

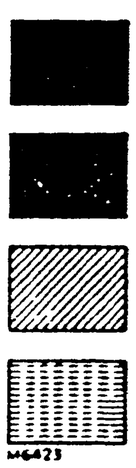

High pressure oil

By-passing oil

Static oil

Exhausting oil

https://tractormanualz.com/

LIST OF OPERATIONS

Axle assembly and drive shafts
- — front axle — remove and refit TB54.10.01
- — oscillation bushes — remove and refit TB54.10.13
- — propeller shaft — remove and refit TB54.10.14
- — propeller shaft centre bearing — remove and refit TB54.10.15

Differential
- – carrier bearings – remove and refit TB54.35.05
- – housing assembly – overhaul TB54.35.02
- – housing assembly – remove and refit TB54.35.01
- – pinion bearings – remove and refit TB54.35.07

Half shaft
- – overhaul – left-hand TB54.30.04
- – overhaul – right-hand TB54.30.03
- – remove and refit – left-hand TB54.30.01
- – remove and refit – right-hand TB54.30.02

Hubs – front
- – assembly – remove and refit TB54.15.02
- – end cover – overhaul TB54.15.11
- – end cover – remove and refit TB54.15.10
- – inner bearing – remove and refit TB54.15.05
- – oil seals – remove and refit TB54.15.07
- – outer bearings – remove and refit TB54.15.03
- – overhaul TB54.15.04

Swivel stub axle
- – overhaul – left-hand TB54.25.06
- – overhaul – right-hand TB54.25.08
- – remove and refit – left-hand TB54.25.01
- – remove and refit – right-hand TB54.25.02

https://tractormanualz.com/

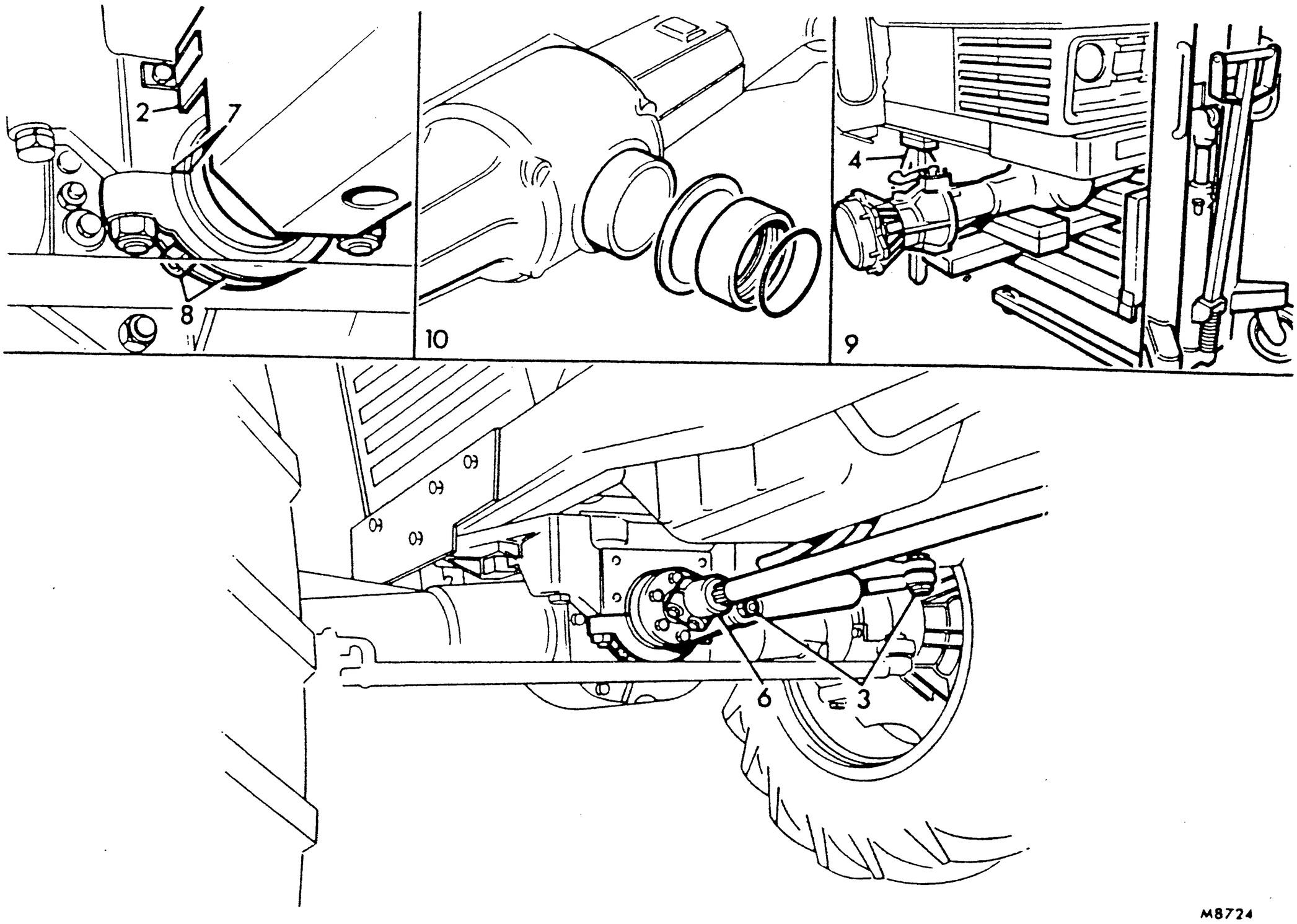

FRONT AXLE

— Remove and refit **TB54.10.01**

OSCILLATION BUSHES

— Remove and refit **TB54.10.13**

Removing

1. Apply handbrake and disconnect earth lead from battery negative (—) terminal.
2. Remove drive shaft cover.
3. Disconnect each end of stering ram and with hydraulic pipes still attached, support away from working area.
4. Slacken wheel nuts, lift front wheels clear of ground using a suitable trolley jack under axle centre casing and support side frames with stands.
5. Remove front wheels.
6. Release bolts and slide drive shaft coupling rearward.
7. Mark each oscillation bush level with bearing cap face to enable the holes in the bushes to be aligned with the anti-rotation pins when the axle is refitted.
8. Release anti-rotation pins and remove bearing caps.
9. Lower and withdraw axle.
10. Remove oscillation bushes, washers and O-rings (early models). Plastic oscillation bushes are fitted to later models.
    NOTE: A support bush is fitted on the front of the axle case. Examine and if worn replace with a new bush, heat slightly to help refitment.

Refitting

NOTE: If new oscillation bushes are to be fitted, position them on the axle, offer up the bearing caps, locate anti-rotation pins and mark bushes level with the bearing cap face.

11. Renew O-rings (early models), replace washers, raise axle using a suitable jack and fit caps ensuring marks on bushes align with bearing cap face, and tighten nuts securely.
12. Locate anti-rotation pin (which holds the grease nipple on early models) and secure.
13. Reverse procedure 1 to 6, tightening wheel nuts to torque in DATA.

DATA

Torque tightening figures

	Nm	kgf m	lbf ft
Wheel nuts TB54.10.01 TB54.10.13	130	13.2	96

https://tractormanualz.com/

PROPELLER SHAFT

— Remove and refit TB54.10.14

Removing

1. Remove propeller shaft protection cover.
2. Release nuts and bolts securing propeller shaft sliding couplings at drop box and front axle.
3. Remove bolts securing propeller shaft centre bearing support to mounting bracket and withdraw from tractor.

Refitting

4. Reverse procedure 1 to 3, lubricating sliding couplings and centre bearing with grease.

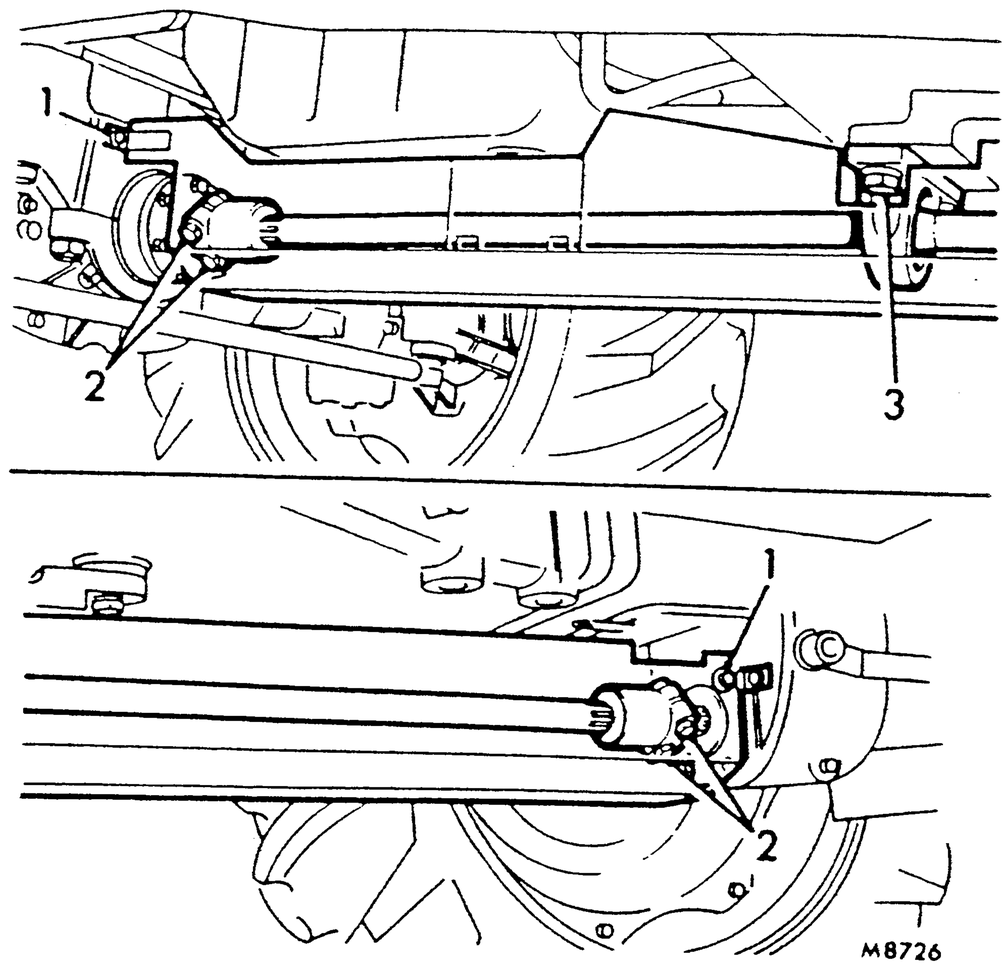

PROPELLER SHAFT CENTRE BEARING

— Remove and refit TB54.10.15

Removing

1. Remove propeller shaft. TB54.10.14.
2. Remove grub screws centralizing bearing with propeller shaft and withdraw bearing.

Refitting

3. Reverse procedure 1 and 2, fitting a new bearing.

https://tractormanualz.com/

HUB ASSEMBLY

—Overhaul	TB54.15.04
Hub end cover 1—5, 24—29	TB54.15.11
—Remove and refit	
Hub 1—3, 6—8, 22—23, 28—29	TB54.15.02
Hub outer bearing 1—3, 6—8, 11, 14, 16, 19, 20, 22—23, 28—29	TB54.15.03
Hub inner bearing 1—3, 6—8, 10, 16, 20, 22—23, 28—29	TB54.15.05
Hub oil seals 1—3, 6—9, 21, 23, 28—29	TB54.15.07
Hub end cover 1—3, 28—29	TB54.15.10
Wheel stud(s) 1, 14, 17, 30	TB54.15.13

Service tool: LC 310

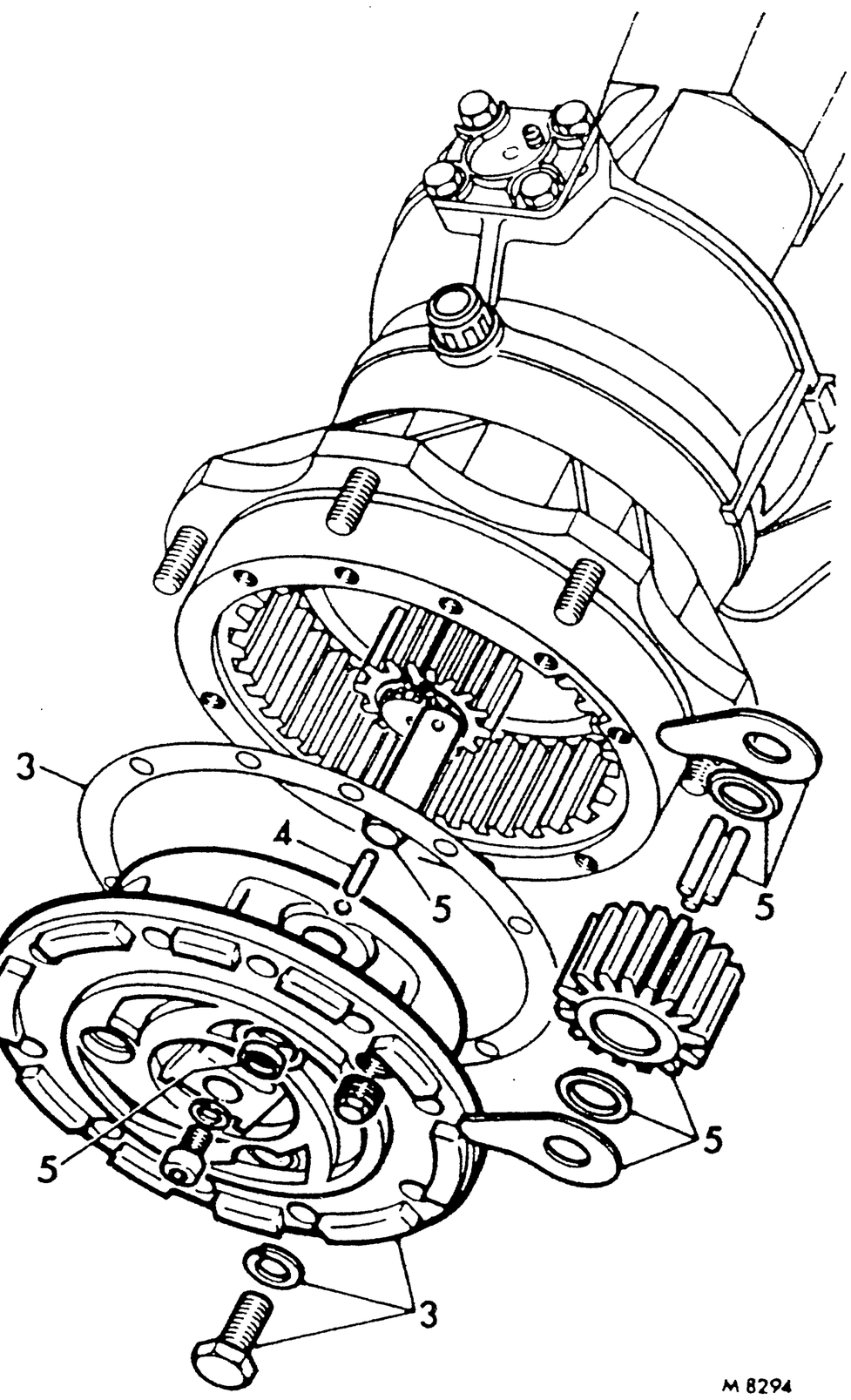

M 8294

Dismantling

1. Remove road wheel.
2. Drain oil from hub. TB.10.
3. Release setscrews and washers from end cover, withdraw planet gear carrier assembly, and remove gasket.
4. Remove roll pins securing planet wheel shafts.
5. Remove welch washers from end cover, tap out shafts and withdraw planet gears, check washers and retaining washers.

NOTE: Care must be taken not to lose roller bearings from gears (23 off).

continued

https://tractormanualz.com/

6. Remove circlip and withdraw sun gear from axle shaft.
7. Remove hub locking nut, using tool LC 310.**
8. Draw off hub, using a suitable puller, noting spacer.
9. Remove felt seal and oil seal from swivel stub axle.
10. Remove inner hub bearing from swivel stub axle, using suitable puller.
11. Remove planet ring and support pinion from hub.
12. Place planet ring in soft jaws of a vice and remove snap-ring holding support pinion in planet ring, withdraw pinion and remove other snap-ring.
13. Place bevel support pinion in vice and remove centralising ring.
14. Remove circlip and outer bearing from hub.
15. Remove wheel studs from hub (if necessary).

Inspection

16. Clean all parts in a suitable solvent, examine for wear or damage and replace where necessary.

Reassembling

17. Refit wheel studs to hub (if removed).
18. Fit snap-ring to planet ring.
19. Fit outer bearing and circlip to hub.
20. Fit bevel support pinion, spacer and inner bearing to hub.
21. Fit hub oil seal (lip inwards), and felt seal to swivel stub axle.
22. Position hub on axle shaft, fit centralising ring and locknut, then tighten to torque in DATA.
23. Fit sun gear to axle shaft and secure with circlip.
24. Smear bore of planet gears with grease and fit needle rollers (23 off).
25. Position planet wheels, wearing washers, retaining washers and fit planet shafts taking care not to dislodge the rollers.
26. Align holes in carrier with holes in shafts and fit roll pins.
27. Fit welch washers to carrier end cover.
28. Fit end cover to hub, using a new gasket, and tighten bolts to torque in DATA.
29. Fill hub with oil, TB10.
30. Refit road wheel.

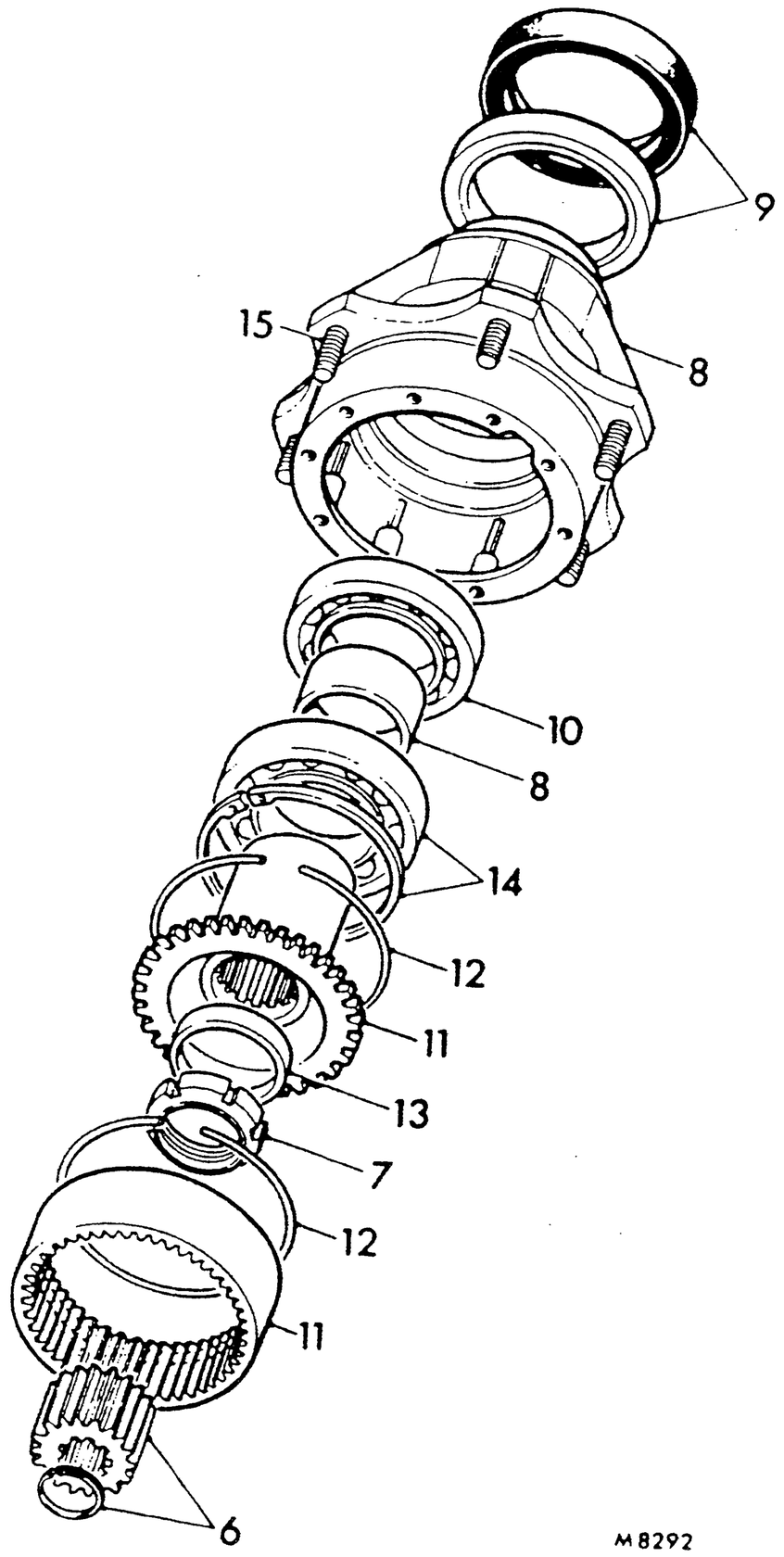

M8292

DATA

	Nm	kgf m	lbf ft
Torque tightening figures			
Hub locknut	1160	118	855
End cover bolts	45	4,6	33

Special lubricants and compounds

Wheel studs	Loctite 542

https://tractormanualz.com/

SWIVEL STUB AXLE

–Remove and refit

Left-hand 1, 3, 4–6, 15, 22–25	TB54.25.01
Right-hand 1–2, 4–6, 15, 17, 22–25	TB54.25.02

–Overhaul

Left-hand 1, 3–16, 18–25	TB54.25.06
Right-hand 1–2, 4–15, 17–25	TB54.25.08

Service tool: LC 305

Dismantling

** 1. Remove axle hub as detailed in TB54.15.02.**
2. RIGHT-HAND SIDE ONLY: Disconnect steering ram, remove stub axle top cover/steering arm, noting shims, and remove studs if necessary.
3. LEFT-HAND SIDE ONLY: Remove stub axle top cover, noting shims.
4. Remove stub axle bottom cover, noting shims.
5. Remove bottom swivel pin, using tool LC 305.
6. Remove top swivel pin, using tool LC 305, disconnect track-rod and lift swivel stub axle from axle case.
7. Remove seals and bearings from swivel pins.
8. Remove hub support shaft (and studs if necessary), noting position of oil groove.
9. Remove oil seal and bush from hub support shaft, using a suitable tool.

Inspection

10. Clean all components in a suitable solvent, examine for wear or damage and replace where necessary.

Reassembling

11. Press bush into hub support shaft and fit new oil seal to shaft (lip inwards).
12. Refit studs to housing (if removed).
13. Fit hub support shaft to housing with a new gasket; align oil slot in shaft with axle breather, then tighten locknuts to torque in DATA.
14. Fit seals and bearings to swivel pins.
15. Position swivel stub axle on axle case, fit swivel pins and outer bearings.
16. Fit stub axle bottom cover without shims and secure to torque in DATA.
17. RIGHT-HAND SIDE ONLY: Fit studs to swivel stub axle if removed.
18. Under top cover fit a 3 mm (0.120 in) shim pack, tightening cover to torque in DATA.
19. Measure gap between cover and stub axle housing.

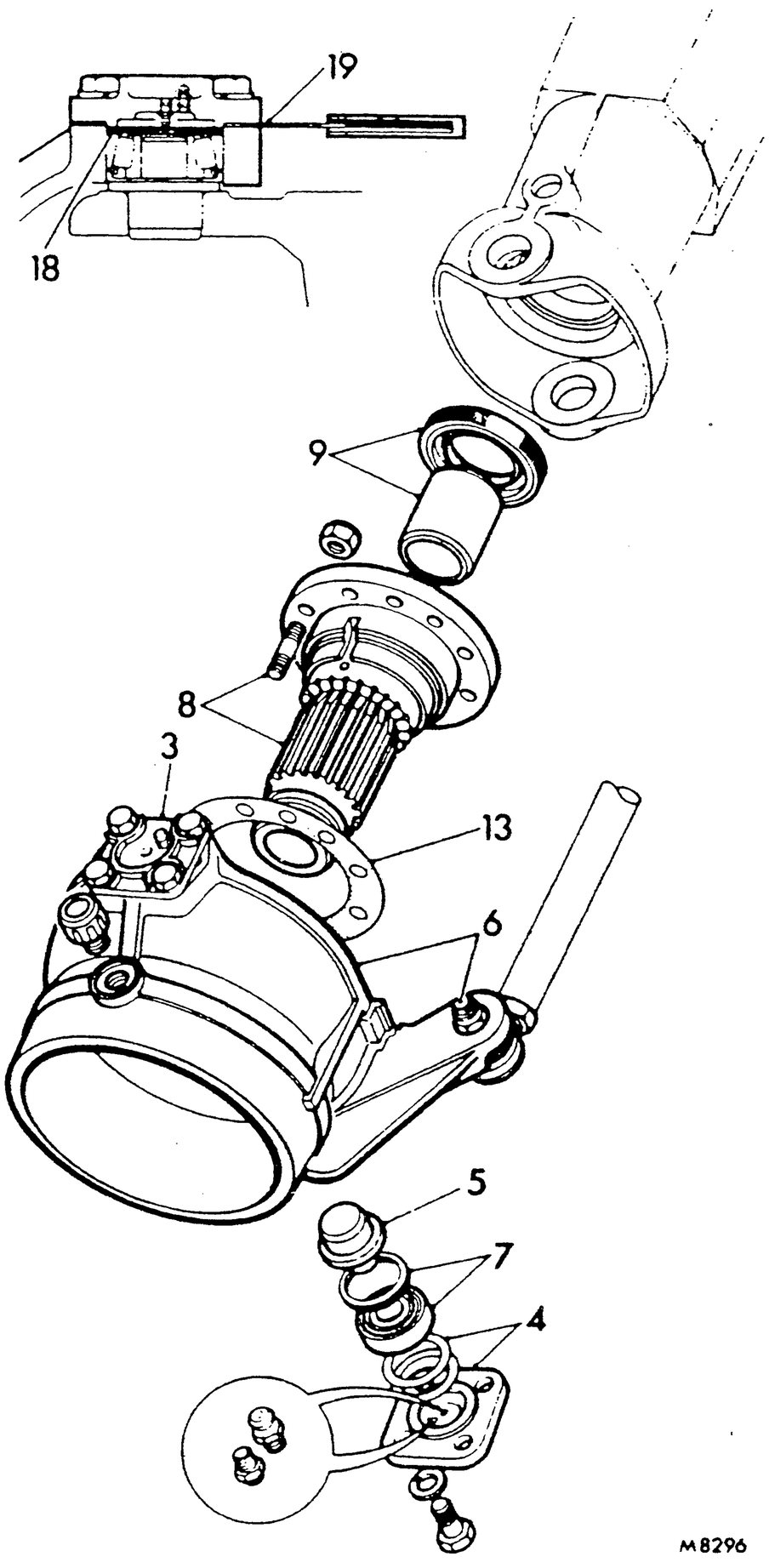

20. The resulting gap found must be subtracted from the 3 mm (0.120 in) shim pack.
21. This total shim pack for stub axle must be divided by 2, giving shim packs under top and bottom covers.
NOTE: A shim difference of up to 0,5 mm (0.020 in) is allowed between top and bottom covers on assembly.
22. Fit determined shim pack under top and bottom covers and tighten bolts/nuts to torque in DATA.
23. RIGHT-HAND SIDE ONLY: Connect steering ram.
24. Reconnect track-rod.
** 25. Fit axle hub as detailed in TB54.15.02.**

DATA

Swivel axle pivots

Shims available for setting stub axle pivot	0,1 mm (0.004 in) 0,3 mm (0.012 in), 0,5 mm (0.020 in), 1 mm (0.040 in)

Torque tightening figures

	Nm	kgf m	lbf ft
Swivel stub axle cover nuts and bolts	130	13,2	96
Hub support shaft locknuts	130	13,2	96

HALF SHAFT

–Remove and refit	
Left-hand 1–4, 13	TB54.30.01
Right-hand 1–4, 13	TB54.30.02
Oil seal left-hand 1–5, 13	TB54.30.08
Oil seal right-hand 1–5, 13	TB54.30.09
–Overhaul	
Left-hand 1–13	TB54.30.04
Right-hand 1–13	TB54.30.03

Service tools: LC 284-9, LC 550-14

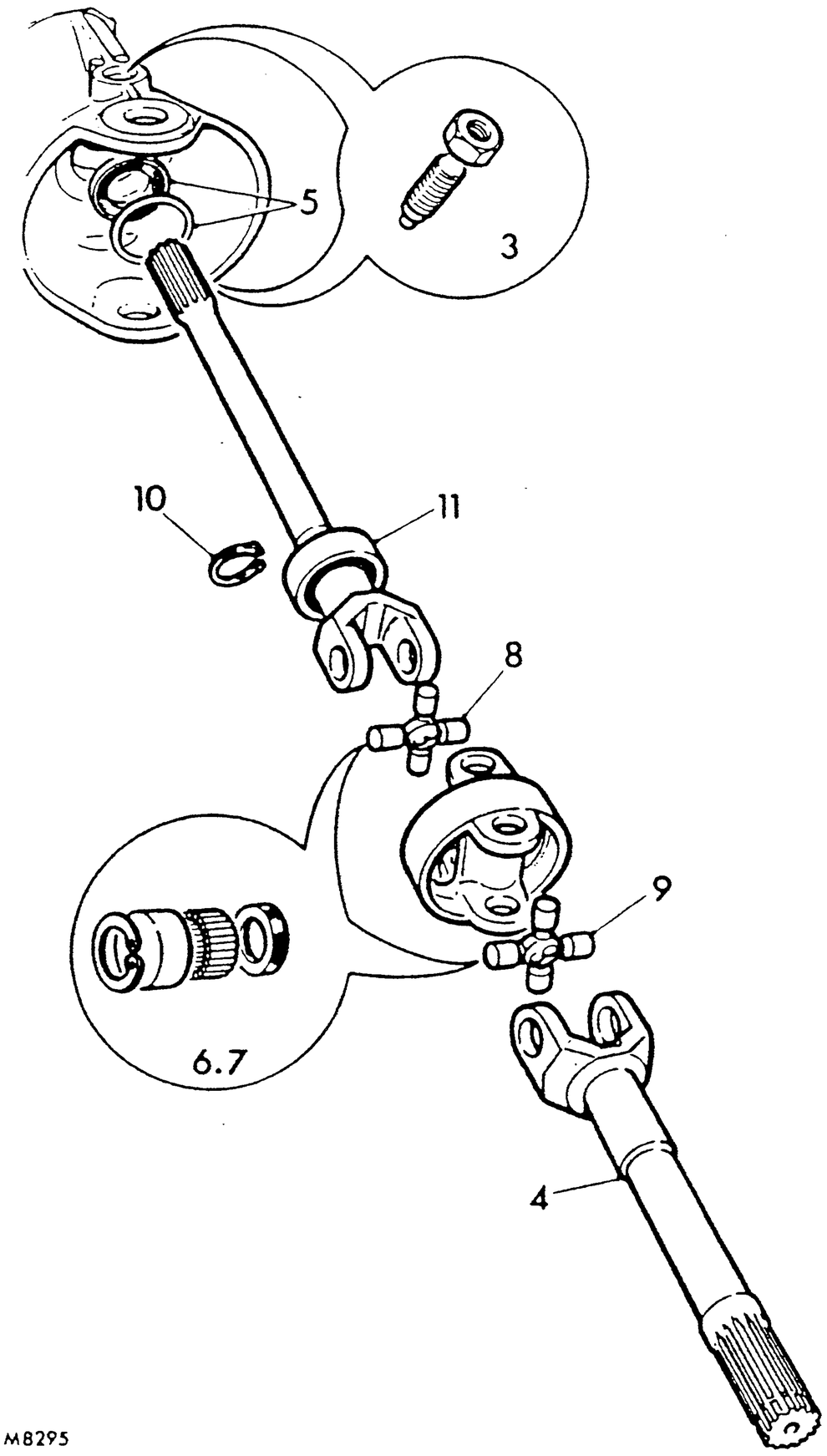

M8295

Dismantling

** 1. Remove hub as detailed in TB54.15.02.
2. Remove swivel stub axle as detailed in TB54.25.01 or TB54.25.02.**
3. Release locknuts and remove bearing locking screws.
4. Using tool LC 284-9, remove axle half shaft.
5. Remove bearing seating gasket and oil seal from axle casing.
6. Remove circlips securing journals to coupler.
7. Remove circlips securing journals to shafts.
8. Remove journal securing inner shaft to coupler, noting cups, roller bearings and seals.
9. Remove journal securing outer shaft to coupler, noting cups, roller bearing and seals.
10. Remove bearing retaining circlip from inner axle shaft.
11. Remove bearing from inner axle shaft, using a suitable puller.

Inspection

12. Clean all parts in a suitable solvent, examine for wear or damage and replace where necessary.

Reassembly

13. Reverse removing procedure.
    a. Refit oil seal in axle casing, using tool LC 550-14.
    b. Smear walls of bearing cups with grease when assembling needle rollers.
    c. Tighten bearing locking screw nuts to torque in DATA.

DATA

Torque tightening figures	Nm	kgf m	lbf ft
Bearing locking screw nuts	180	18,4	133

https://tractormanualz.com/

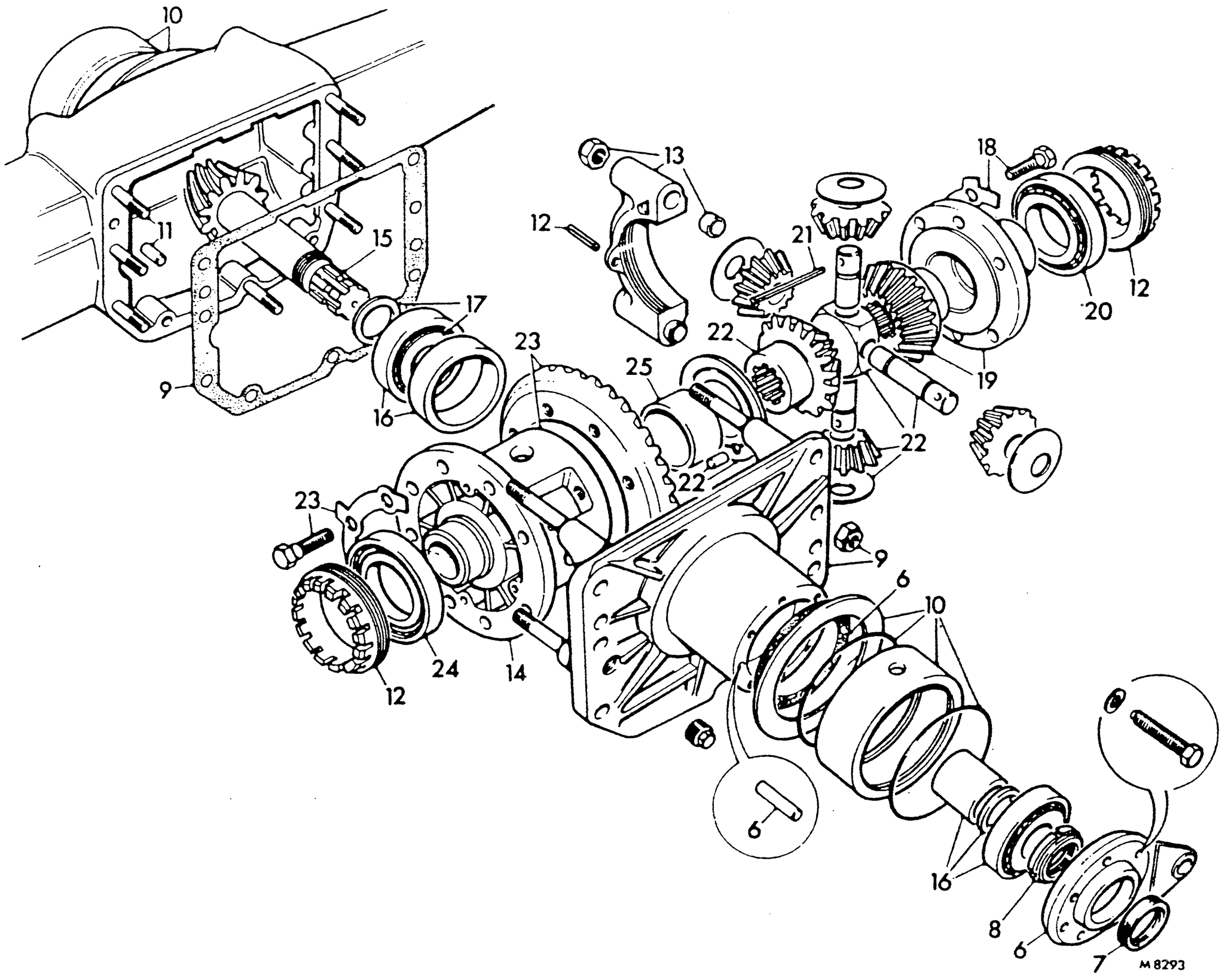

DIFFERENTIAL

–Remove and refit

Housing assembly 1–19, 47–55	**TB54.35.01**
Carrier bearings 1–9, 12–14, 20, 24, 28–29, 44–55	**TB54.35.05**
Pinion bearings 1–9, 12–17, 35–55	**TB54.35.07**
–Overhaul 1–55	**TB54.35.02**

Service tools: LC 306, LC 309

Dismantling

** 1. Remove hubs as detailed in TB54.15.02.
2. Remove stub axles as detailed in TB54.25.01 or TB54.25.02.
3. Remove half shafts as detailed in TB54.30.01.**
4. Drain oil from differential centre casing. TB10.
5. Suitably support tractor and remove front axle.
6. Remove pinion end cover and gasket, noting dowel.
7. Remove oil seal from cover.
8. Suitably lock pinion shaft and remove ring nut, using tool LC 309.
9. Release differential carrier securing nuts, withdraw carrier from axle, noting dowels, and remove gasket.
** 10. Remove oscillation bushes if necessary, noting washer and seals (early models only).**
11. Remove studs and dowels from driving head axle case if necessary.
12. Remove roll pins from ring nut caps and release ring nuts.
13. Release locknuts and remove caps marking for reassembly, noting dowels.
14. Remove crown wheel assembly from carrier.
15. Drift pinion shaft assembly from housing.
16. Remove inner race and drift pinion bearing outer races and large distance piece from pinion housing; remove distance piece and spacer.

continued

https://tractormanualz.com/

17. Draw inner bearing from pinion shaft, using a suitable puller, and remove spacer.
18. Release locking washers and remove setscrews securing end cover to differential housing.
19. Remove end cover and side bevel gear.
20. Remove bearing from end cover, using a suitable puller.
21. Remove locking pins from pinion gear shafts.
22. Remove shafts, pinion gears, thrust washers and shaft housing, side bevel gear, thrust washer, and dowel (if necessary).
23. Release lock washers and setscrews securing crown wheel to differential housing and remove crown wheel.
24. Remove bearing from differential housing, using a suitable puller.
25. Remove bush from differential housing if necessary.

Inspection

26. Clean all components in a suitable solvent, examine for wear or damage and replace where necessary.

Reassembling

27. Press bush into differential housing (if removed).
28. Press bearing onto differential housing.
29. Press bearing onto differential housing end cover.
30. Position crown wheel and lock washers on differential housing, fit bolts tightening to torque in DATA, and bend tabs over on lock washers.
31. Fit dowel (if removed), thrust washer and side bevel gear into differential housing.
32. Assemble thrust washers, pinion gears, shafts and housing, securing shafts with locking pins.
33. Fit side bevel gear, end cover, locking washers and bolts, tighten to torque in DATA, and bend over tabs on lock washers.
34. Fit distance piece and bearing outer races into pinion housing.
35. Position both bearings in housing and secure using tool LC 306.
36. Position housing in vice and fit securing caps, tightening nuts to torque in DATA.
37. Measure diameter 'D' and dimension 'Y' and determine size of pinion head spacer using the following calculations.

    Step 1: $B = Y - 25\text{ mm (dia. of bar)} + \frac{D}{2}$

    Step 2: Spacer required = B – figure on pinion face, select spacer from range quoted in DATA.

38. Remove clamp holding bearings, fit determined spacer to pinion shaft (chamfer towards head) and press bearing onto shaft.
39. Locate pinion in housing, fit distance piece, largest selective spacer (see DATA), bearing and ring nut.
    NOTE: To tighten ring nut to torque in DATA, the differential must be assembled temporarily.
40. With dial test indicator on pinion face, record amount of clearance by moving the pinion backwards and forwards.

continued

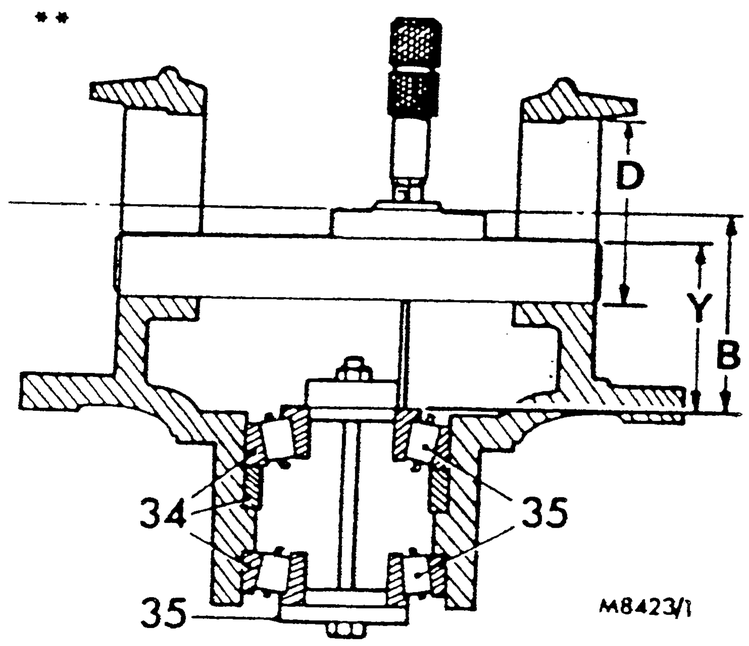

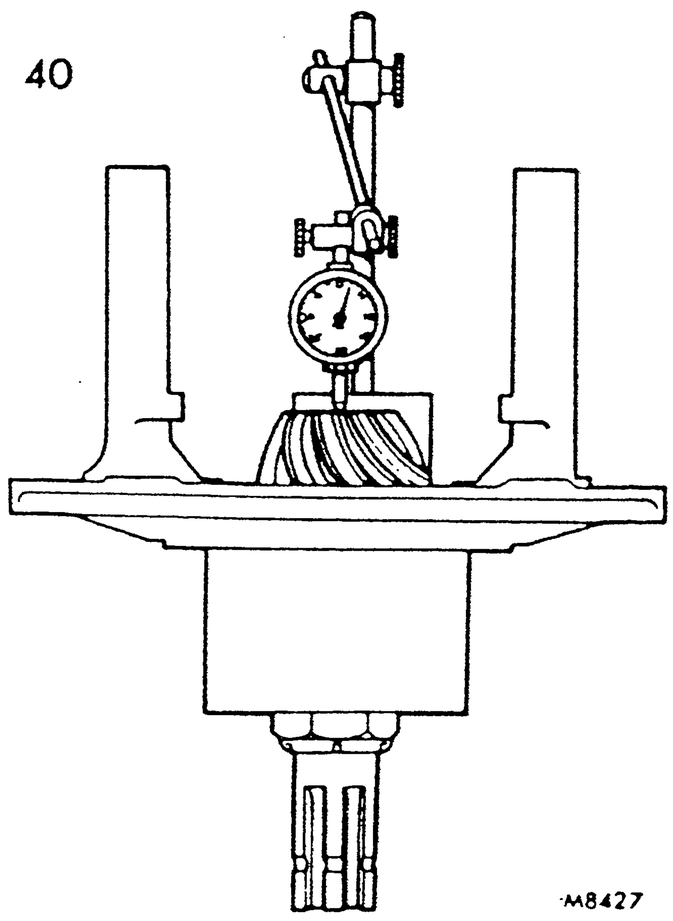

41. To find correct amount of shims needed.
NOTE: This setting is only made with new bearings and with oil seal and pinion end cover removed.

EXAMPLE	mm	in
Amount of clearance	0,55	0.022
Pre-load required	0,05	0.002
Amount of shims to be removed	0,60	0.024

42. Remove ring nut and inner bearing and fit correct spacer.
43. Check pre-load of pinion with figure quoted in DATA, using a spring balance, and adjust if necessary using spacers quoted in DATA.
44. Refit crown wheel assembly to carrier and tighten nuts until they just secure the caps.
45. Tighten crown wheel ring nuts and adjust to give correct backlash, see DATA.
46. Tighten crown wheel side ring nut a further two notches to give required pre-load, see DATA; then fit locking pins and tighten cap locking nuts to torque in DATA.
47. Fit joint to axle case, position crown wheel and pinion assembly aligning dowels and tighten nuts to torque in DATA.
48. Fit washers and oscillation bushes (if removed) noting O-rings (later models only).
49. Fit oil seal to pinion cover using a suitable tool, lip inwards.
50. Using a new gasket, fit pinion cover and tighten bolts to torque in DATA.
51. Refit axle to tractor.
52. Refill centre casing with oil. TB10.
**53. Refit half shaft as detailed in TB54.30.01.
54. Refit swivel stub axle as detailed in TB54.25.01 or TB54.25.02.
5. Refit hubs as detailed in TB54.15.02.**

43

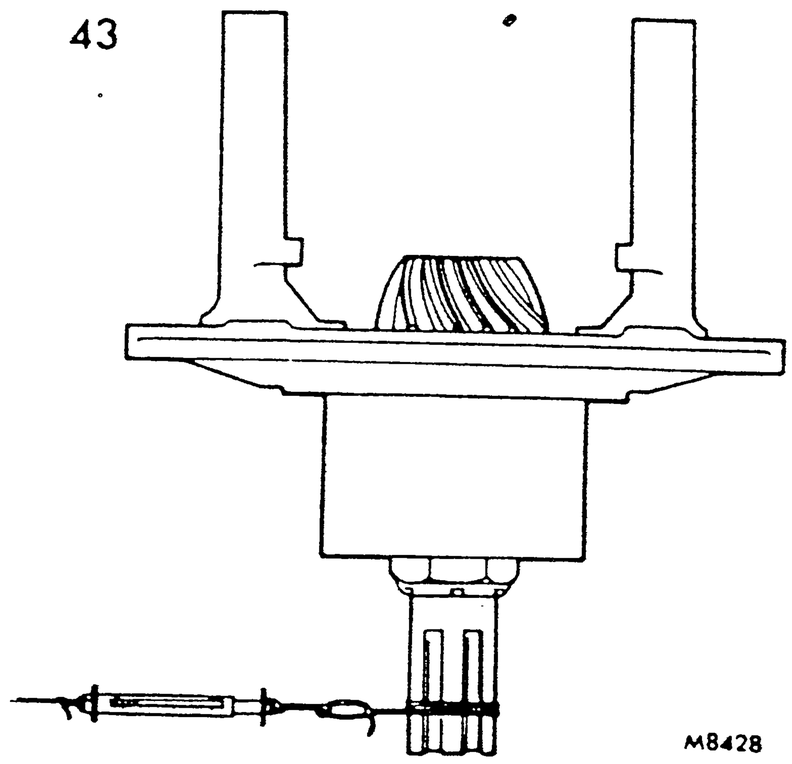

M8428

DATA

Pre-load recorded on spring balance:	N	kgf	lbf
Crown wheel equivalent to 2 notches of locking ring nut	39	4	8.8
Bevel pinion	4,7	0,48	1.06

NOTE: If original bearings are used only half the pre-load is required.

Bevel pinion pre-load	0 to 0,05 mm (0 to 0.002 in)
Bevel pinion backlash	0,25 mm (0.010 in)
Spacers available for setting the pinion and adjusting the pre-load	2,5 mm (0.098 in) to 3,4 mm (0.133 in) in steps of 0.05 mm (0.002 in)

Torque tightening figures	Nm	kgf m	lbf ft
Differential support caps	130	13,2	96
Differential carrier to axle case nuts	85	8,7	63
Pinion ring locking nut	441	46	332
Crown wheel securing bolts	85	8,7	63
Differential end cover securing bolts	45	4,6	33
Pinion cover securing setscrews	25	2,5	18

https://tractormanualz.com/

SOCKET AND STEM ASSEMBLY – LEFT- OR RIGHT-HAND – TWO-WHEEL DRIVE

–Remove and refit TB57.28.14

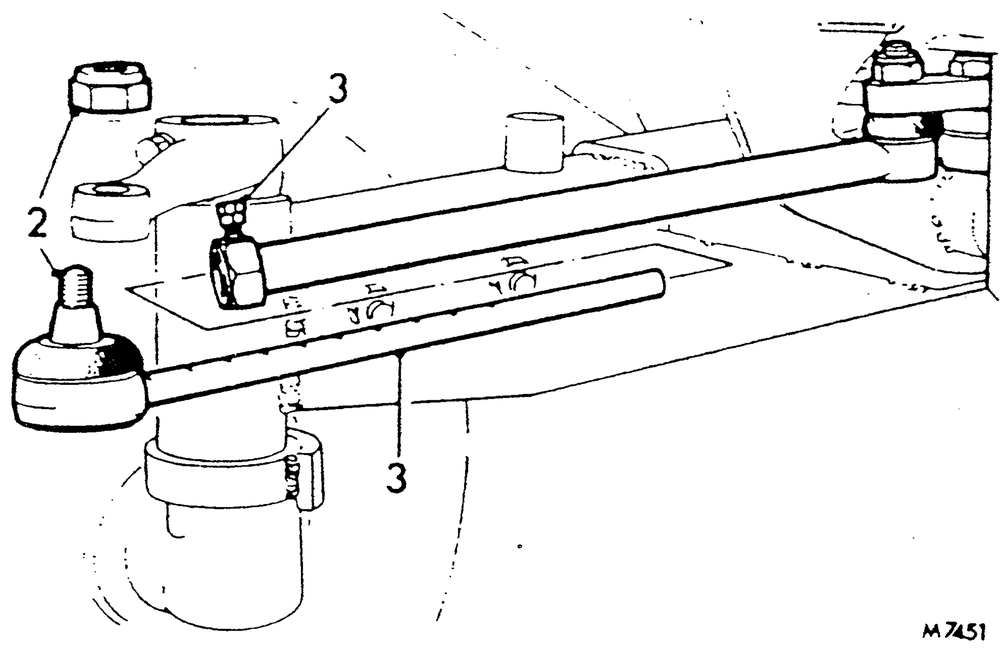

M7451

Removing

1. Position front wheels to either left or right full lock.
2. Remove tie-rod socket nut and detach socket and stem assembly from steering arm.
3. Slacken locknut and setscrew to withdraw socket and stem assembly from tie-rod.

Refitting

4. Reverse procedure 1 to 3, noting:
   a. Lubricate socket and stem assembly.
   b. Ensure setscrew locates in the groove of the socket and stem assembly, and tighten to torque in DATA.
   c. Tighten tie-rod socket nut to the torque figure given in DATA.

DATA

Torque tightening figures	Nm	kgf m	lbf ft
Tie-rod socket nut	110	11,06	80
Tie-rod setscrews	47 to 54	4,8 to 5,5	35 to 40

https://tractormanualz.com/

CRANKED ARM BUSHES—245

—Remove and refit TB57.28.15

Removing

1. Remove power steering cylinder assembly. TB57.15.19.
2. Remove front axle. TB54.10.07, instructions 1 to 4.
3. Remove bracket complete with air filter and expansion bottle.
4. Remove bottom front radiator panel.
5. Remove centre post nut, seal cover, lower hub and dust seal.
6. Remove centre post and withdraw cranked arm.
7. Press out centre post bushes and steering cylinder bush.

Refitting

8. Fit steering cylinder bush and centre post bushes.
9. Position crank arm and fit centre post.
10. Fit dust seal, lower hub, seal cover and centre post nut tightening to torque in DATA.
11. Fit bottom radiator panel.
12. Refit bracket complete with air filter and expansion bottle.
13. Refit front axle. TB54.10.07.
** 14. Refit power steering cylinder assembly. TB57.15.19.

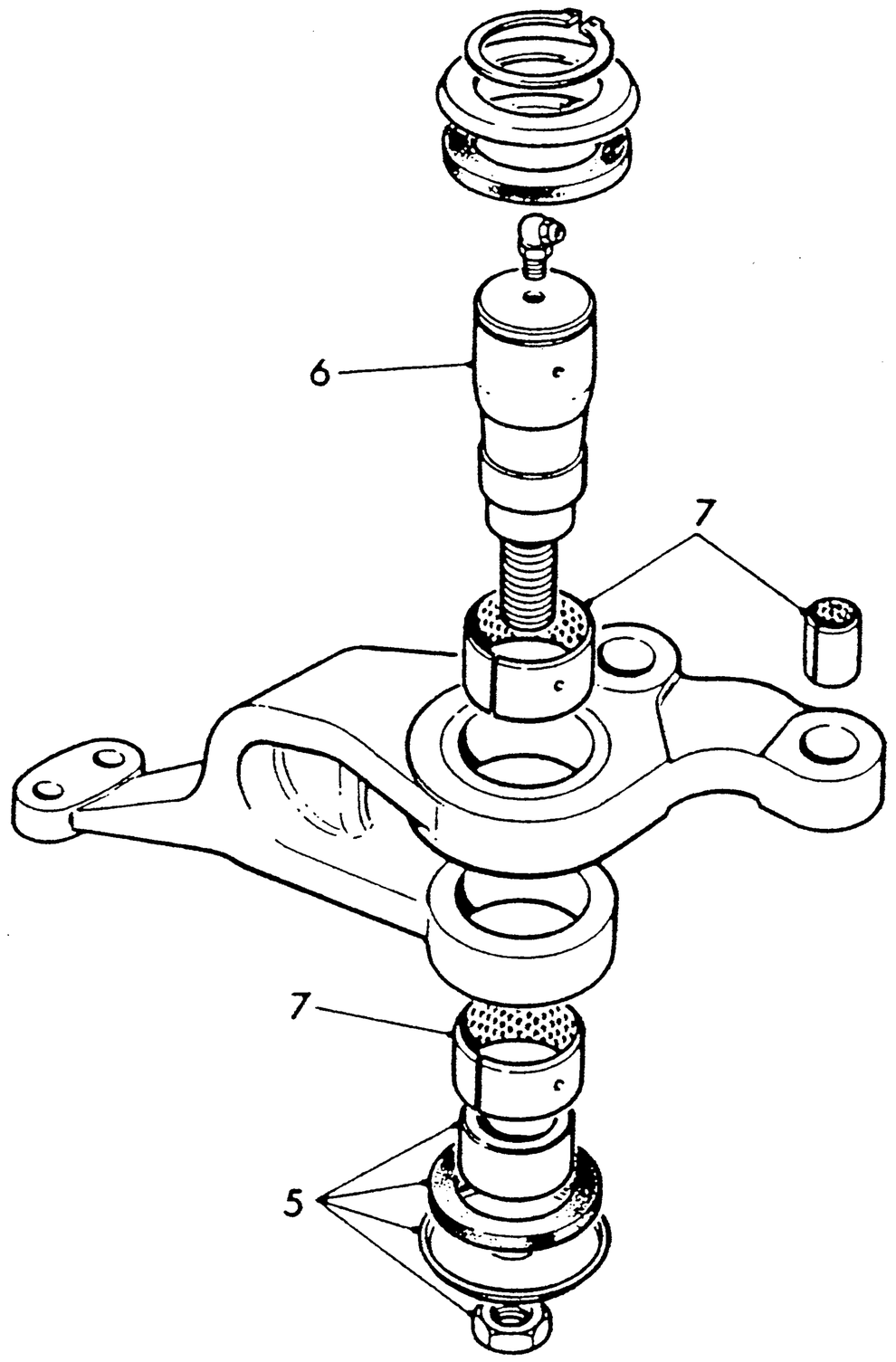

M7452

DATA

Torque tightening figures	Nm	kgf m	lbf ft	
Centre post nuts	220	22,2	160	**

https://tractormanualz.com/

CRANK ARM BUSHES — ALL TWO-WHEEL-DRIVE MODELS EXCEPT 245••

—Remove and refit RB57.28.15

Removing

1. Remove battery and carrier box.
2. Remove front axle. TB54.10.07, operations 1 to 5.
3. Remove power steering cylinder, see TB57.15.19, and move radiator expansion bottle aside.
4. Remove front frame extension and release battery cable from clip on right-hand side.
5. Remove centre post nut, seal cover, lower hub and dust seal.
6. Press out centre post and withdraw crank arm from frame.
7. Press out the two crank arm centre post bushes.
8. Press out power steering cylinder bush.

Refitting

9. Fit power steering cylinder bush.
10. Fit centre post bushes.
11. Position crank arm on frame and fit centre post.
** 12. Fit lower hub, dust seal, seal cover and centre post nut tightening to torque in DATA.**
13. Refit front frame extension and reclip battery cable to frame.
14. Refit power steering cylinder. TB57.15.19.
15. Refit front axle. TB54.10.07.
16. Refit carrier box and battery.

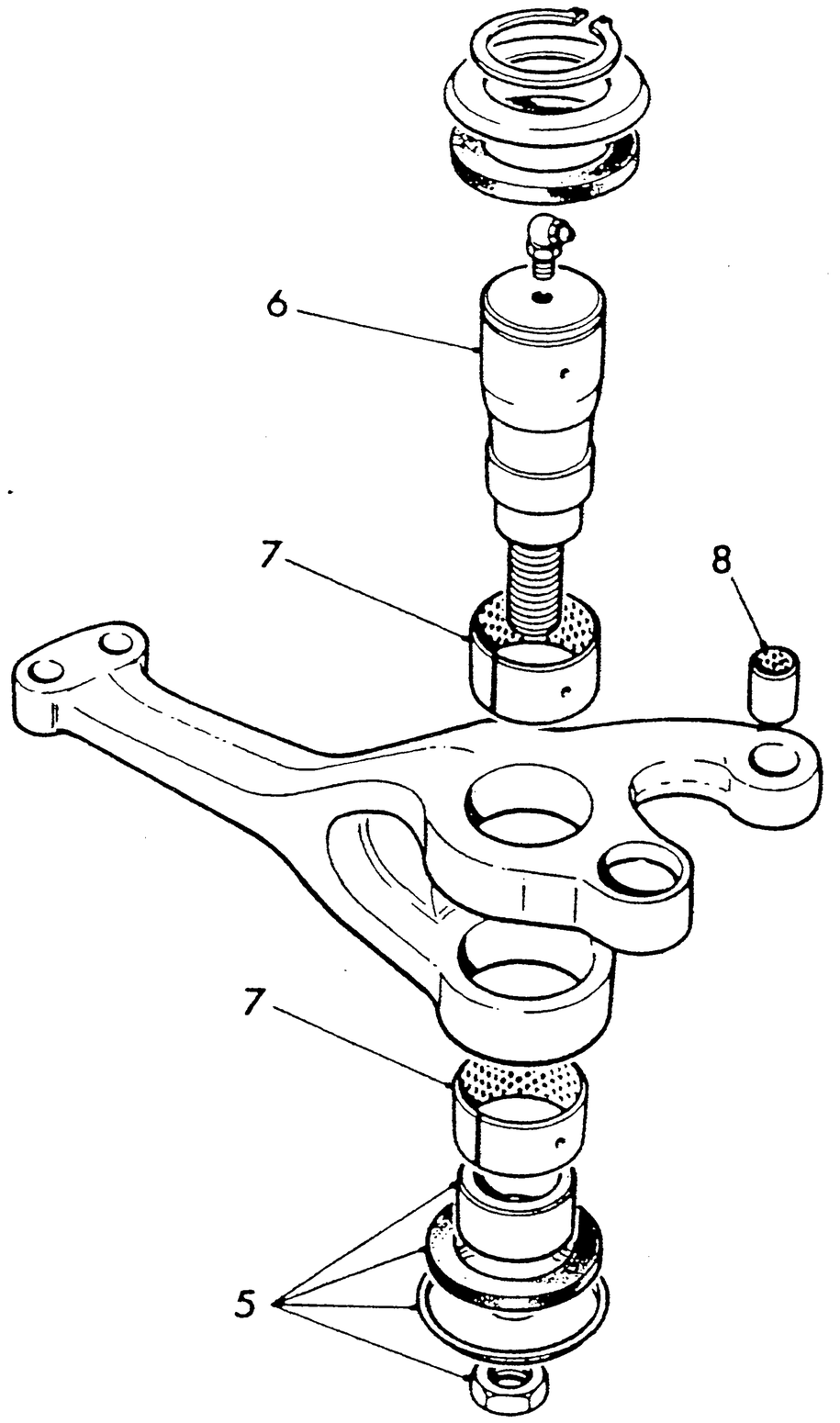

M7453

**DATA

Torque tightening figures

	Nm	kgf m	lbf ft
Centre post nut	220	22,2	160 **

https://tractormanualz.com/

STEERING ALIGNMENT – TWO-WHEEL DRIVE

—Adjust TB57.28.19

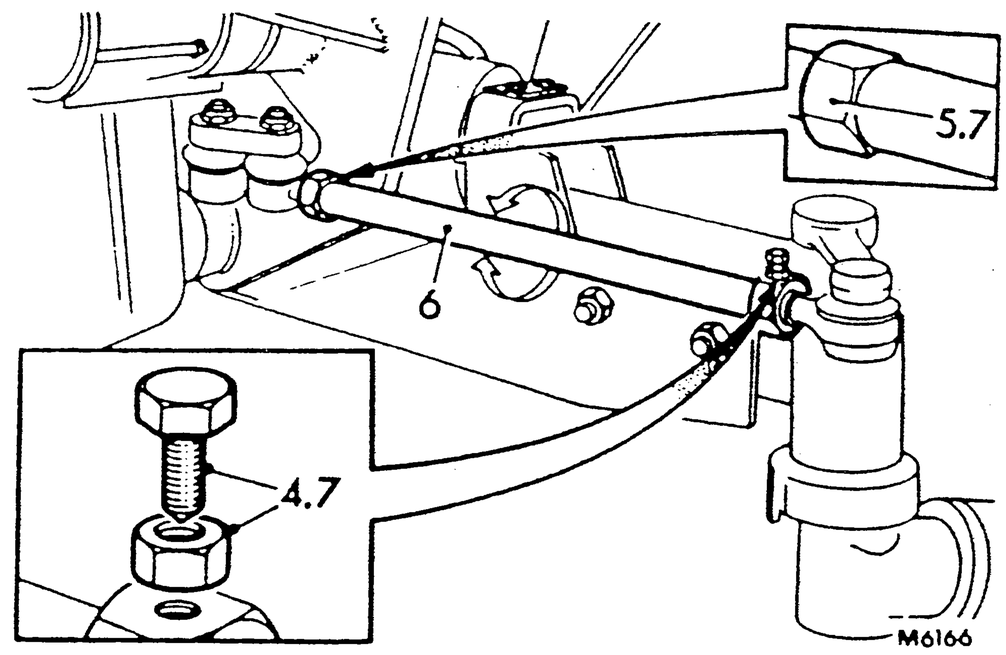

Adjusting

1. Check tyre pressures, and adjust as necessary (see handbook).
2. Position tractor on a level surface with the front wheels in the straight-ahead position.
3. Using optical alignment equipment, determine the wheel alignment setting (see DATA).
   NOTE: Wheel alignment can only be adjusted by the right-hand tie-rod assembly.
4. Slacken locknut and remove setscrew from intermediate tie-rod.
5. Slacken cone nut on intermediate tie-rod.
6. Rotate intermediate tie-rod in the appropriate direction to adjust the wheel alignment setting.
7. Tighten cone nut, setscrew and lock nut on intermediate tie-rod, ensuring that the setscrew locates in the groove of the socket and stem assembly.
8. Re-check wheel alignment.

DATA

Wheel alignment

Front wheel alignment—toe in	1,5 to 3,0 mm (0.06 to 0.12 in)

**STEERING ALIGNMENT – FOUR-WHEEL DRIVE

—Adjust TB57.28.19

Adjusting

1. Check tyre pressures, and adjust as necessary (see Handbook).
2. Position tractor on a level surface with the front wheels in a straight-ahead position.
3. Using optical aligning equipment, determine the wheel alignment setting (see DATA).
4. Slacken both track-rod end locking nuts and rotate track-rod in appropriate direction to adjust the wheel alignment setting.
5. Tighten track-rod end locking nuts and re-check wheel alignment.

DATA

Wheel alignment

Front wheel alignment-toe in	0 to 10 mm (0 to 0.39 in) **

https://tractormanualz.com/

LIST OF OPERATIONS

Air/fluid/electric components
- stop light switch — remove and refit TB70.60.16

Brake disc operating mechanism
- adjust TB70.20.01
- discs — fixed/rotating — remove and refit TB70.20.66
- multi-disc assembly — overhaul TB70.20.71

Brake hydraulic system
- master cylinder — left-hand side — remove and refit TB70.25.51
- master cylinder — right-hand side — remove and refit TB70.25.52
- master cylinder seals — left-hand — remove and refit TB70.25.53
- master cylinder seals — right-hand — remove and refit TB70.25.54
- reservoir — remove and refit TB70.25.13
- slave cylinder — remove and refit TB70.25.46
- slave cylinder seals — remove and refit TB70.25.47

Mechanical linkage
- brake pedal bushes — remove and refit TB70.30.03
- handbrake — adjust TB70.30.26
- handbrake cross-shaft bushes — remove and refit TB70.30.33
- handbrake lever — ratchet and pawl — overhaul TB70.30.25
- handbrake lever — remove and refit TB70.30.24
- handbrake lever shaft bushes — remove and refit TB70.30.34

https://tractormanualz.com/

BRAKES — TWO-WHEEL-DRIVE MODELS

—Adjust TB70.20.01

Adjusting

1. Disconnect earth lead from battery negative (—) terminal.
2. Chock front wheels and release handbrake.
3. Jack up rear wheels clear of ground; position additional supports beneath rear axle.
   NOTE: The following procedure should be strictly adhered to.
4. Ensure there is clearance (A) between the nut and link on each brake; slacken the nuts if required.
5. Turn the adjusting nut clockwise while rotating the wheel, until the brake is just applied and the wheel cannot be rotated by hand, then back off the nut one turn (6 flats). Repeat for the other brake.
6. Apply the handbrake one notch at a time, while rotating the rear wheels to ensure that it applies the brake evenly, with a maximum travel of four notches. Adjust the nuts on each brake to obtain the correct setting.
7. When the handbrake lever is in the off position, fully forward, check that there is a clearance (A) between the nut and link on each brake.
8. Lower jack and remove other packing.
9. Apply handbrake and remove chocks from front wheels.
10. Re-connect battery.

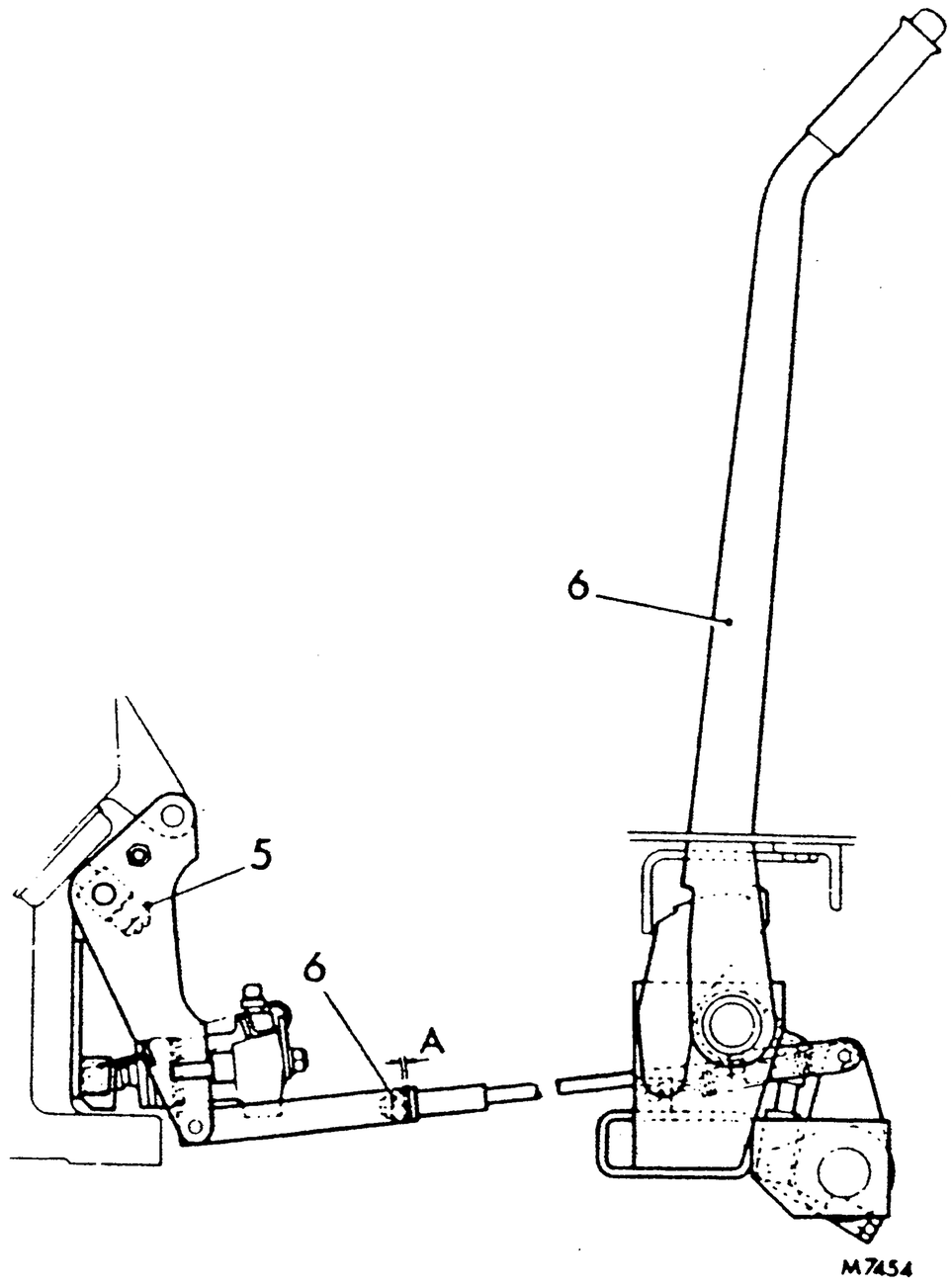

M7454

**BRAKES — FOUR-WHEEL-DRIVE MODELS

— Adjust TB70.20.01

Adjusting

1. Disconnect earth lead from battery negative terminal.
2. Chock front wheels and release handbrake.
3. Jack either of the rear wheels clear of the ground.
4. Turn the adjusting nut clockwise while rotating the wheel, until the brake is just applied and the wheel cannot be rotated by hand, then slacken the nut one turn (6 flats). Repeat the procedure for the other brake.
   NOTE: The handbrake should not normally need adjusting unless travel exceeds four clicks of the ratchet.
5. Adjust the nut on each brake linkage until the hand-brake travel is correct.
6. Apply handbrake and remove chocks from front wheels.
7. Re-connect battery.**

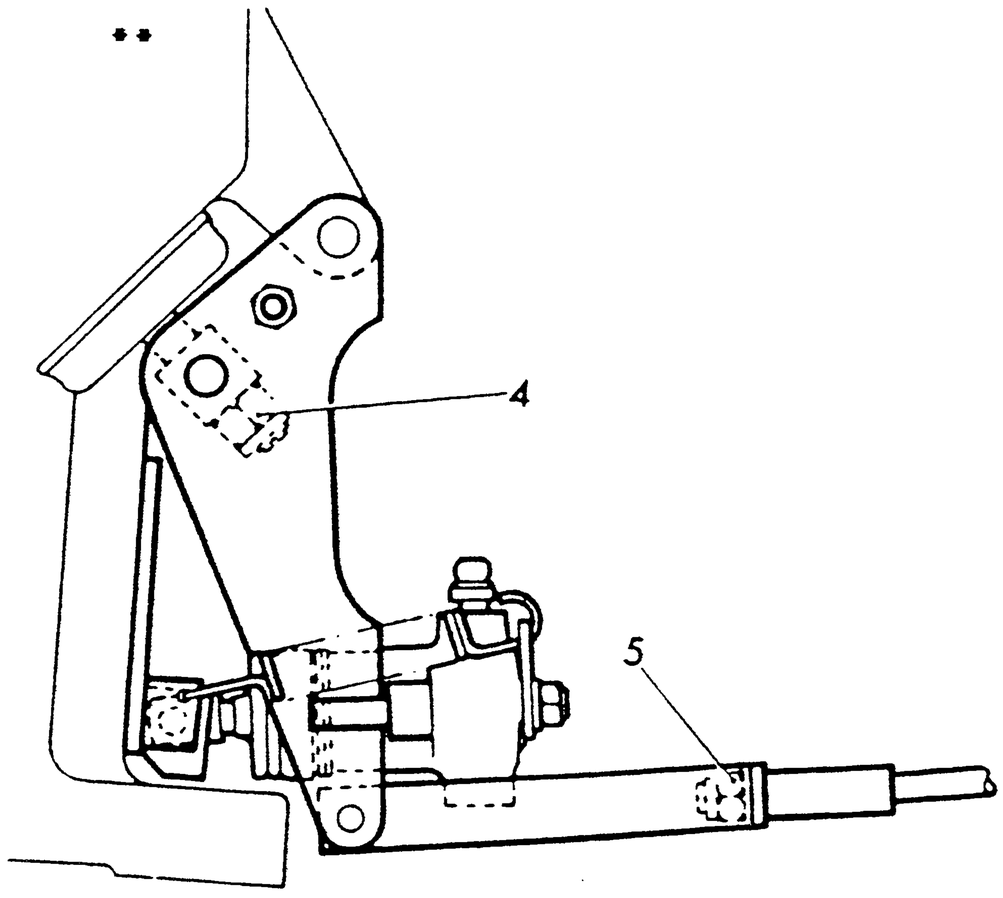

M8119
**

**13. Remove bolts securing mounting bracket to axle and gearbox and withdraw assembly from vehicle.
14. Remove slave cylinder return spring.
15. Remove split pin and clevis pin from slave cylinder jaw-end.
16. Remove nuts and washers securing slave cylinder to brake lever, detach spring anchor plate and withdraw from vehicle.

Refitting

17. Reverse procedure 4 to 9 for R.H. side slave cylinder.
18. Reverse procedure 10 to 16 for L.H. side slave cylinder.
19. Connect flexible brake pipe.
20. Top up and bleed brakes.
21. Connect battery.**

BRAKE SLAVE CYLINDER SEALS – ALL MODELS

–Remove and refit **TB70.25.47**

Removing

1. Remove brake slave cylinder. TB70.25.46.
2. Position slave cylinder in vice.
3. Remove dust cover, piston retaining circlip and washer.
4. Remove piston from housing cylinder.
5. Remove seal from piston.
6. Clean and inspect all parts; renew where necessary.

Refitting

7. Refit seal to piston.
8. Lubricate cylinder piston and seal with brake fluid, and refit piston to cylinder.
9. Smear dust cover and sealing areas with Girling Rubber Grease.
10. Refit piston retaining washer, circlip and dust cover.
11. Remove slave cylinder from vice.
12. Refit brake slave cylinder. TB70.25.46.

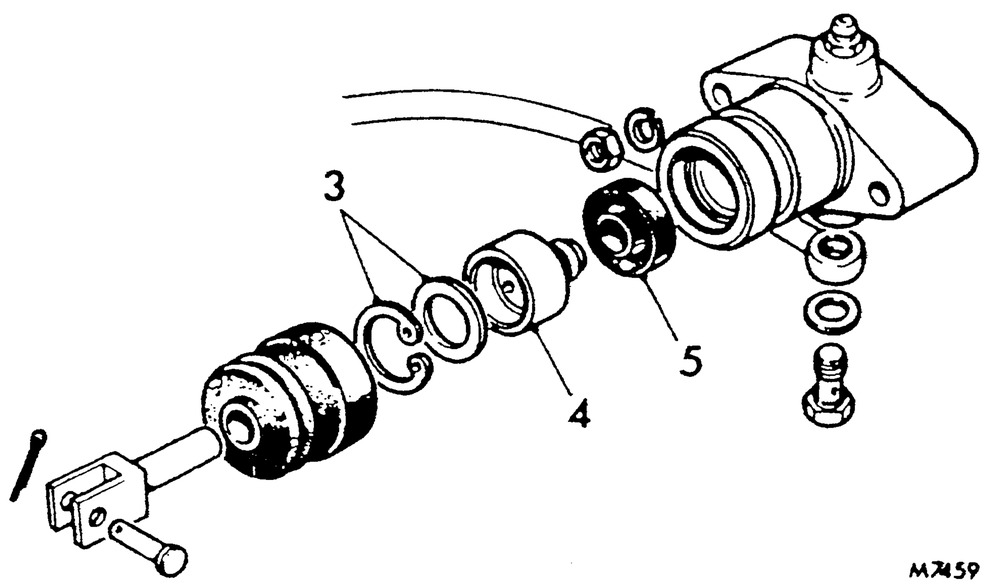

M7459

BRAKE MASTER CYLINDER – LEFT-HAND SIDE – ALL MODELS

–Remove and refit **TB70.25.51**

Removing

1. Disconnect the earth lead from battery negative (–) terminal.
2. Remove both console side panels.
3. Remove setscrews securing front of instrument panel.
4. Disconnect heater control at valve and release clip on crankcase.
5. Disconnect stop control at injection pump.
6. Draw cables through into cab complete with panel.
7. Disconnect feed pipe from reservoir to master cylinder and drain fluid.
8. Disconnect pipe between master and slave cylinder.
9. Remove split pin, clevis pin, washers and release return spring from fork end.
10. Remove nuts and bolts securing master cylinder to bracket and withdraw cylinder from vehicle.

continued

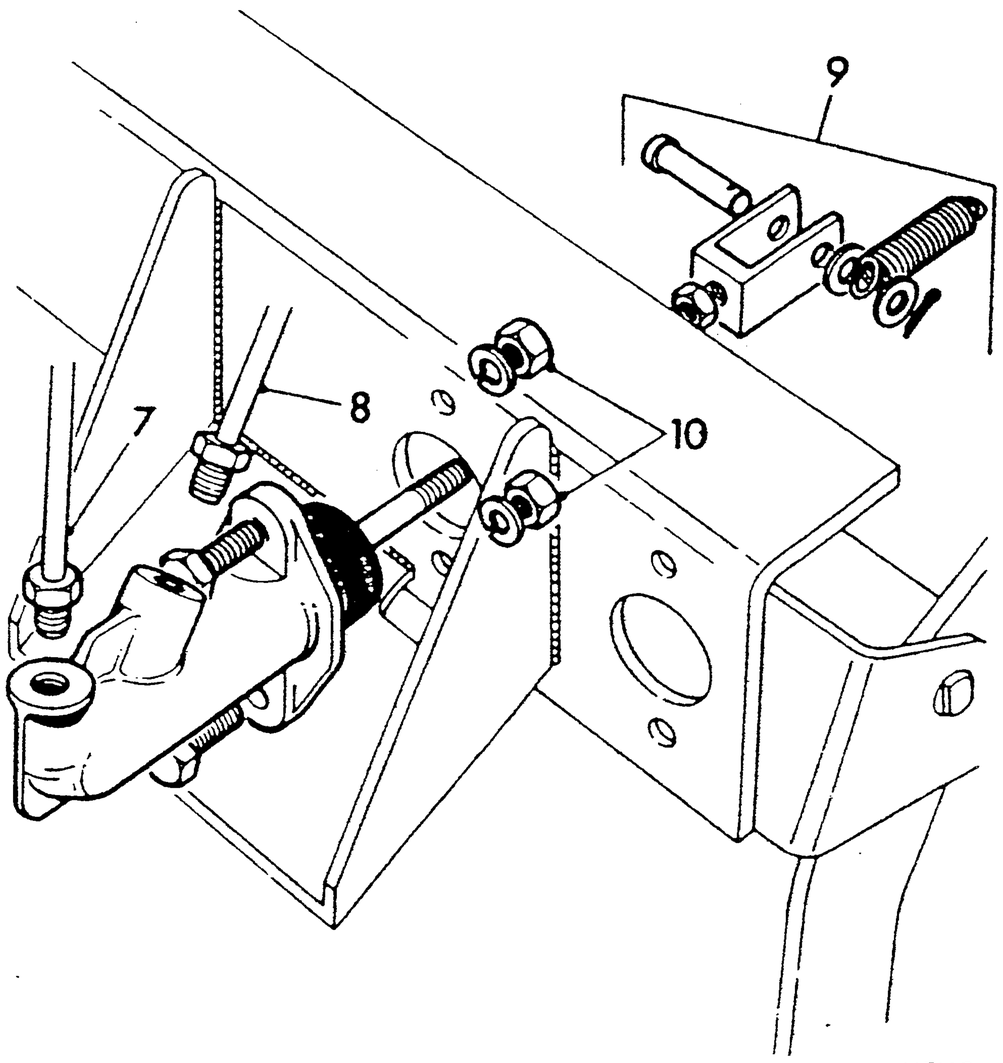

M7460

https://tractormanualz.com/

Refitting

11. Position master cylinder, enter reservoir feed pipe and slave to master cylinder pipe.
12. Refit nuts and bolts and secure master cylinder to bracket.
13. Tighten both pipes.
14. Refit clevis pin, washers, split pin and return spring to jaw end.
15. Push heater and stop control cable through to front of vehicle and refit front instrument panel.
16. Reconnect stop cable to injection pump.
17. Reconnect heater control to valve and reclip cable to crankcase.
18. Refit both side panels to console.
19. Top-up and bleed system. TB 10.
20. Reconnect battery.
21. Adjust pedal return stop until pedal pads are level.
    NOTE: Both pedals should be at their maximum height, without fouling in the bottom of the push-rod forks.

22. Adjust the push-rod until the free travel of the pedal pad is 6 to 12 mm (0.25 to 0.5 in) before the push-rod contacts the master cylinder piston.

BRAKE MASTER CYLINDER — RIGHT-HAND SIDE

—Remove and refit **TB70.25.52**

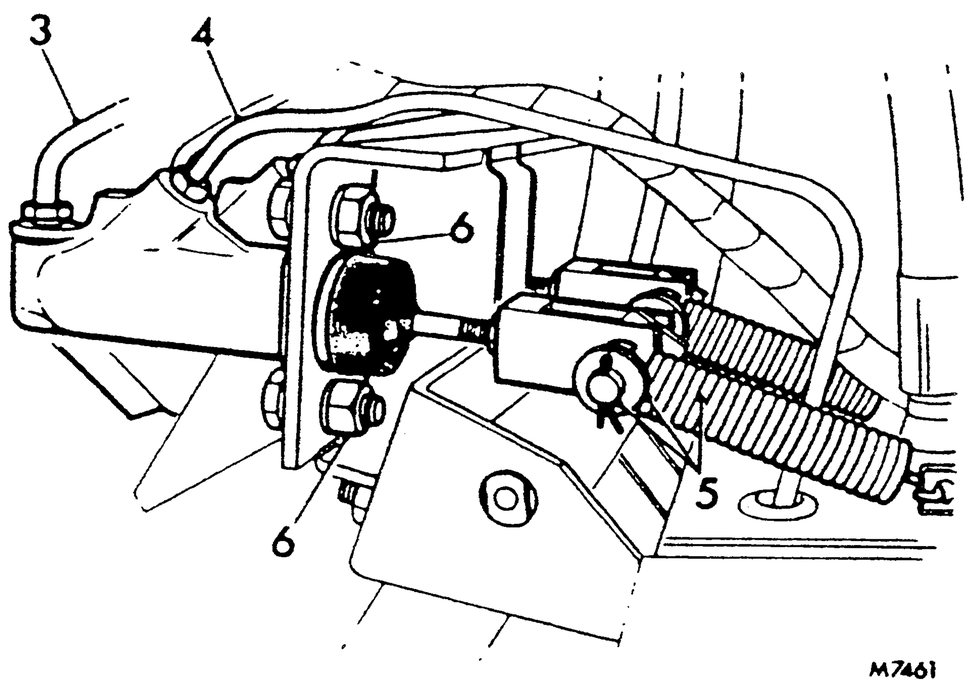

Removing

1. Disconnect earth lead from battery negative (—) terminal.
2. Remove console right-hand side panel.
3. Disconnect feed pipe from reservoir to master cylinder and drain fluid.
4. Disconnect pipe between master and slave cylinder.
5. Remove return spring, split pin, clevis pin and washers from fork end.
6. Remove nuts and bolts securing master cylinder to bracket and withdraw cylinder from vehicle.

Refitting

7. Position master cylinder, enter reservoir feed pipe and slave to master cylinder pipe.
8. Refit nuts and bolts and secure master cylinder to bracket.
9. Tighten both pipes.
10. Refit clevis pin, washers, split pin and return spring to fork end.
11. Refit console side panel.
12. Top-up and bleed system.
13. Reconnect battery.
14. Adjust pedal return stop until pedal pads are level.
    NOTE: Both pedals should be at their maximum height without fouling in the bottom of the push-rod forks.

15. Adjust the push-rod until the free travel of the pedal pad is 6 to 12 mm (0.25 to 0.5 in) before the push-rod contacts the master cylinder piston.

https://tractormanualz.com/

HANDBRAKE CROSS-SHAFT BUSHES – TWO WHEEL DRIVE

—Remove and refit TB70.30.33

Removing

1. Remove cross-shaft assembly. TB70.30.24.
2. Position cross-shaft assembly in vice.
3. Remove roll pins from levers.
4. Release return spring and remove setscrew and key washer securing brake lever to cross-shaft.
5. Remove split pin from cross-shaft.
6. Remove cross-shaft, levers and washer.
7. Remove bushes from support brackets.
8. Remove grease nipples; clean or renew.

Refitting

9. Refit grease nipples.
10. Fit new bushes to support brackets.
11. Refit cross-shaft, levers and washer.
12. Refit split pin to cross-shaft.
13. Refit return spring and secure brake lever to cross-shaft.
14. Refit roll pins.
15. Refit cross-shaft assembly. TB70.30.24.

https://tractormanualz.com/

HANDBRAKE LEVER – SHAFT BUSHES – FOUR-WHEEL DRIVE

–Remove and refit **TB70.30.33**

Removing

1. Disconnect earth lead from battery negative (–) terminal and chock front wheels.
2. Release handbrake.
3. Disconnect handbrake actuating rod at balance bar.
4. Disconnect flexible brake pipe at slave cylinder, and drain fluid.
5. Disconnect operating linkage rod at both ends.
6. Remove bolts securing mounting bracket to axle and gearbox and withdraw assembly from vehicle.
7. Knock out roll pin and remove setscrews securing handbrake lever and ratchet to shaft.
8. Remove bushes from mounting bracket.

Refitting

9. Fit new bushes to mounting bracket.
10. Reverse procedure 1 to 7, top up and bleed brakes, see TB10, and check handbrake adjustment.

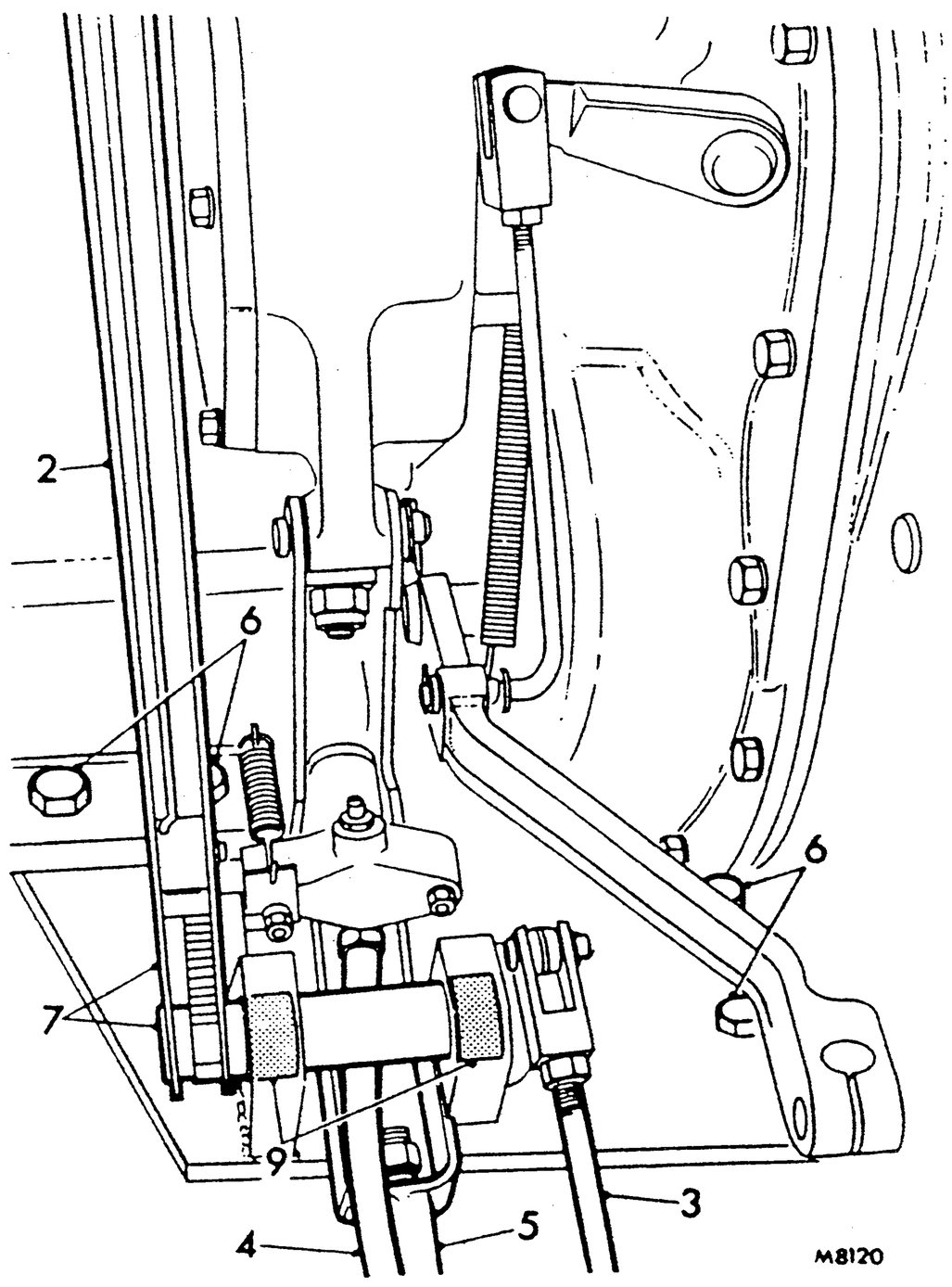

HANDBRAKE LEVER SHAFT BUSHES – TWO-WHEEL DRIVE

–Remove and refit **TB70.30.34**

Removing

1. Remove handbrake lever. TB70.30.24.
2. Remove handbrake lever cross-shaft.
3. Remove lever shaft bushes.

Refitting

4. Fit lever shaft bushes.
5. Refit handbrake lever cross-shaft.
6. Refit handbrake lever. TB70.30.24.

STOP LIGHT SWITCH – ALL MODELS

–Remove and refit **TB70.60.16**

Removing

1. Disconnect earth lead from battery negative (–) terminal.
2. Remove console left-hand side cover.
3. Disconnect switch wires.
4. Remove switch.

Refitting

5. Refit new switch.
6. Connect wires to switch.
7. Refit console left-hand side panel.
8. Connect battery.

https://tractormanualz.com/

LIST OF OPERATIONS

Body — general
— cab — remove and refit TB76.10.01

Door lock
— catch striker plate — check and adjust TB76.37.01
— handle catch — remove and refit TB76.37.05

https://tractormanualz.com/

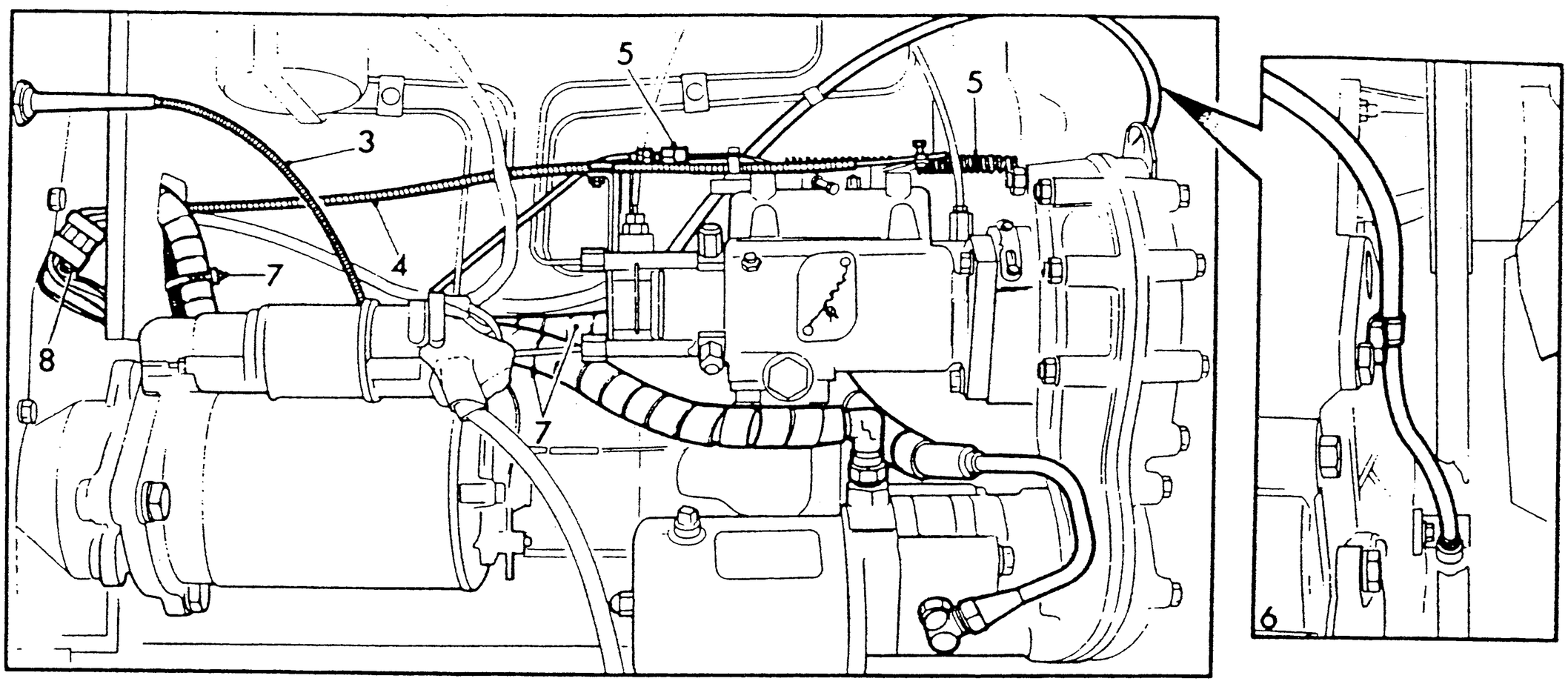

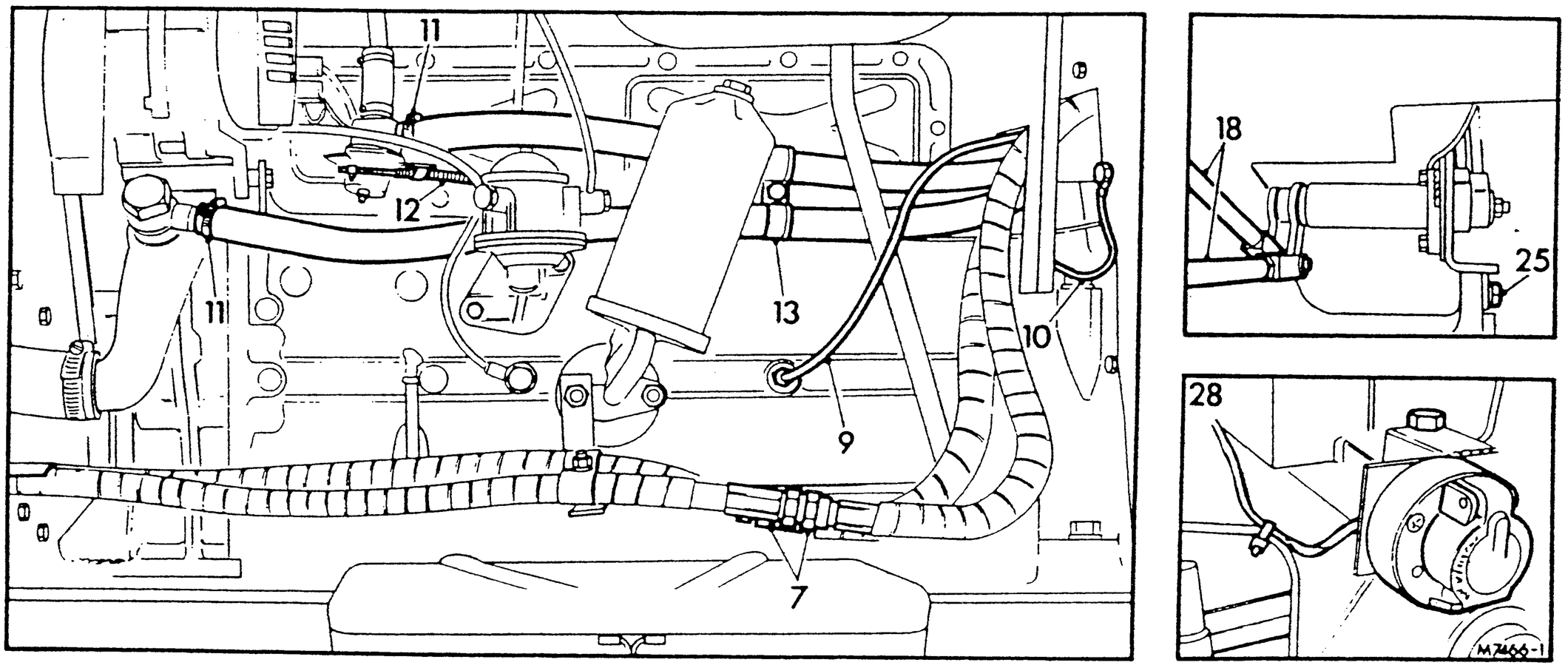

CAB — ALL MODELS WITH 5 × 2 GEARBOX

—Remove and refit **TB76.10.01**

Service tool: Cab lifting beam, see TB99

Removing

NOTE: Protect against ingress of dirt when steering hoses, clutch and brake pipes are disconnected. Some details of the 245 tractor are not illustrated, follow the written instructions as applicable.

1. Disconnect earth lead from battery negative (—) terminal.
2. Drain cooling system. TB10.
3. Disconnect cold start cable at injection pump, unclip from starter motor, and remove cable from bulkhead.
4. Disconnect stop control cable at injection pump and release from clip.
5. Disconnect throttle control cable and release return spring.
6. Unclip tractometer drive cable at timing case and disconnect from angle drive.
7. Remove plastic tie securing wiring loom to steering hoses right-hand side and disconnect steering hoses right- and left-hand side.
8. Disconnect wiring harness under right-hand side of bulkhead.
9. Disconnect oil pressure gauge pipe at crankcase.
10. Disconnect earth cable at flywheel housing left-hand side.
11. Disconnect both heater hoses and clips.
12. Disconnect heater control cable from valve and unclip from engine.
13. Remove clips securing heater hoses to block. Manoeuvre them with control cable from behind the engine breather tube.
14. Disconnect clutch pipe at slave cylinder.
15. Disconnect brake pipes at slave cylinders.
16. Disconnect I.P.T.O. clutch return spring at cab.
17. Disconnect hydraulic control rods.

https://tractormanualz.com/

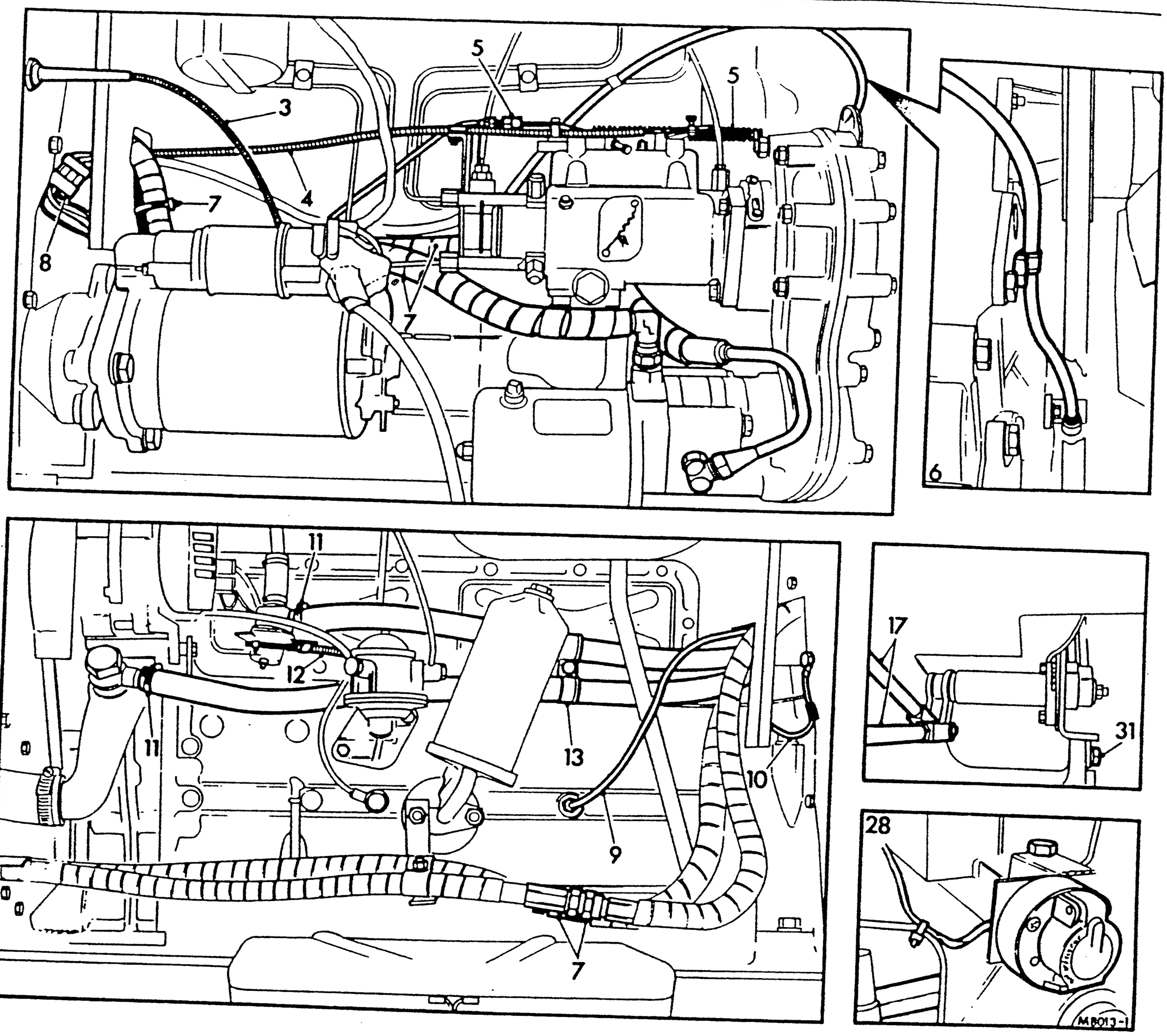

••CAB — ALL SYNCHRO MODELS EXCEPT 245••

—Remove and refit TB76.10.01

Service tool: Cab lifting beam, see TB99

Removing

••**NOTE:** Protect against ingress of dirt when steering hoses, clutch and brake pipes are disconnected. Some details of the turbocharged tractor are not illustrated and routes of pipes and cables will differ; follow written instructions as applicable.••

1. Reverse rear road wheels and disconnect earth lead from battery negative (—) terminal.
2. Drain cooling system, see TB10, and disconnect thermostart cable at inlet manifold if fitted.
3. Disconnect cold start cable at injection pump, unclip from starter motor, and remove cable from bulkhead.
4. Disconnect stop control cable at injection pump and release from clip.
5. Disconnect throttle control cable and release return spring.
6. Unclip tractometer drive cable at timing case and disconnect from angle drive.
7. Remove plastic tie securing wiring loom to steering hoses right-hand side and disconnect steering hoses right- and left-hand side.
8. Disconnect wiring harnesses under right-hand side of bulkhead.
9. Disconnect oil pressure gauge pipe at crankcase.
10. Disconnect earth cable at flywheel housing left-hand side.
11. Disconnect both heater hoses and clips.
12. Remove heater control cable from valve and unclip from engine.
13. Remove clips securing heater hoses to block. Manoeuvre them with control cable from behind the engine breather tube.
14. Disconnect clutch pipe at slave cylinder.
15. Disconnect brake pipes at unions under cab floor, and drain fluid.

continued

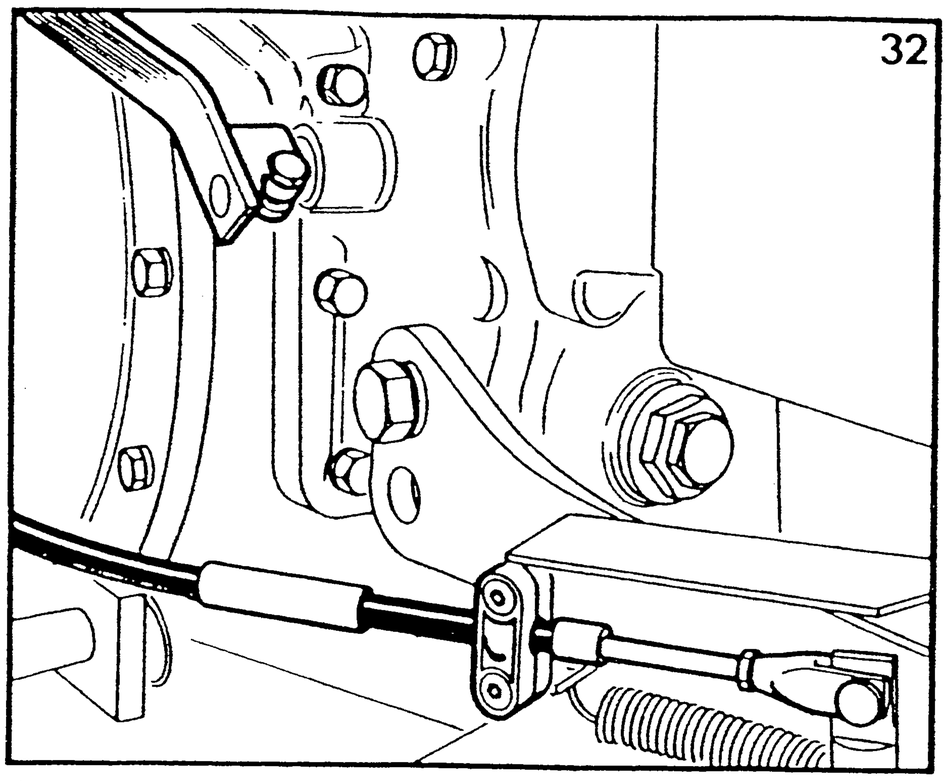

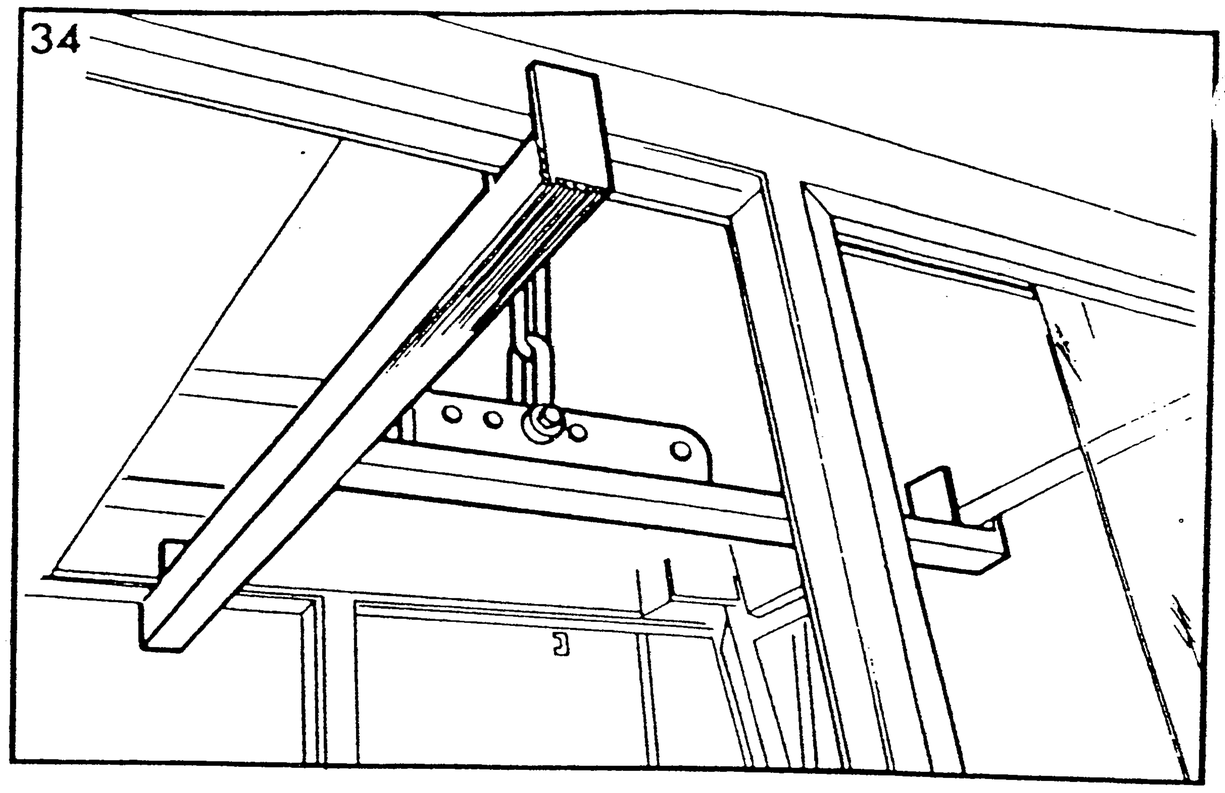

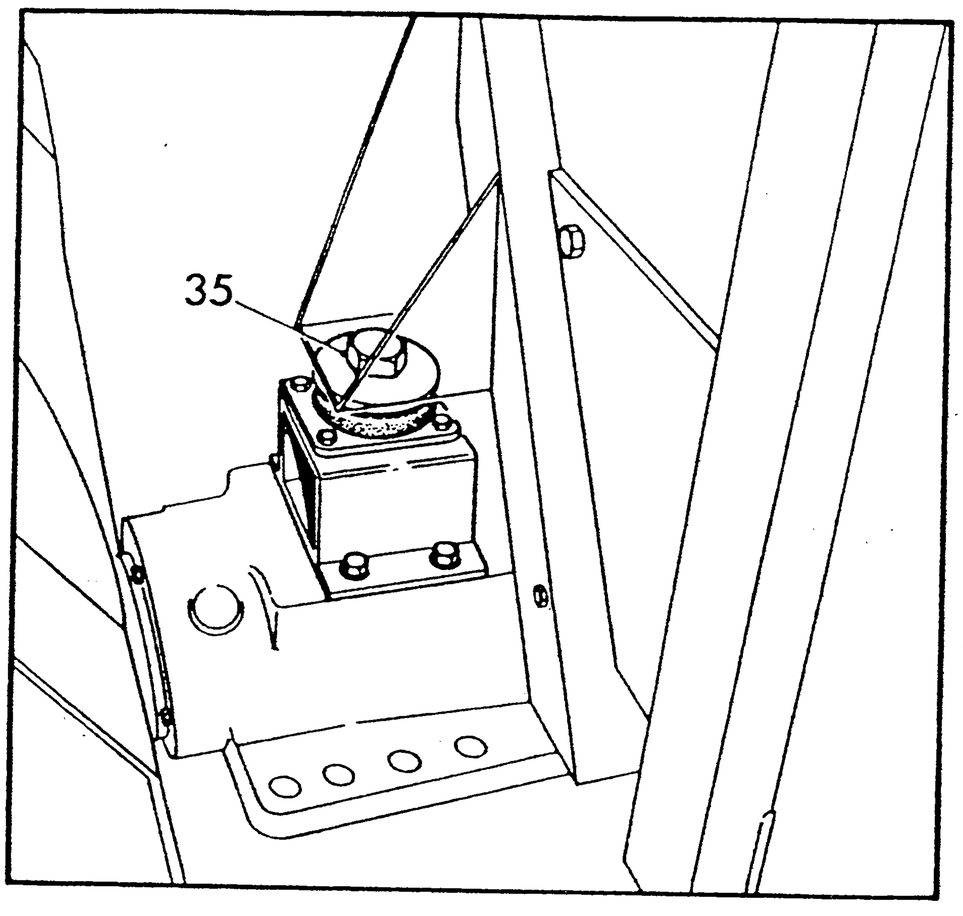

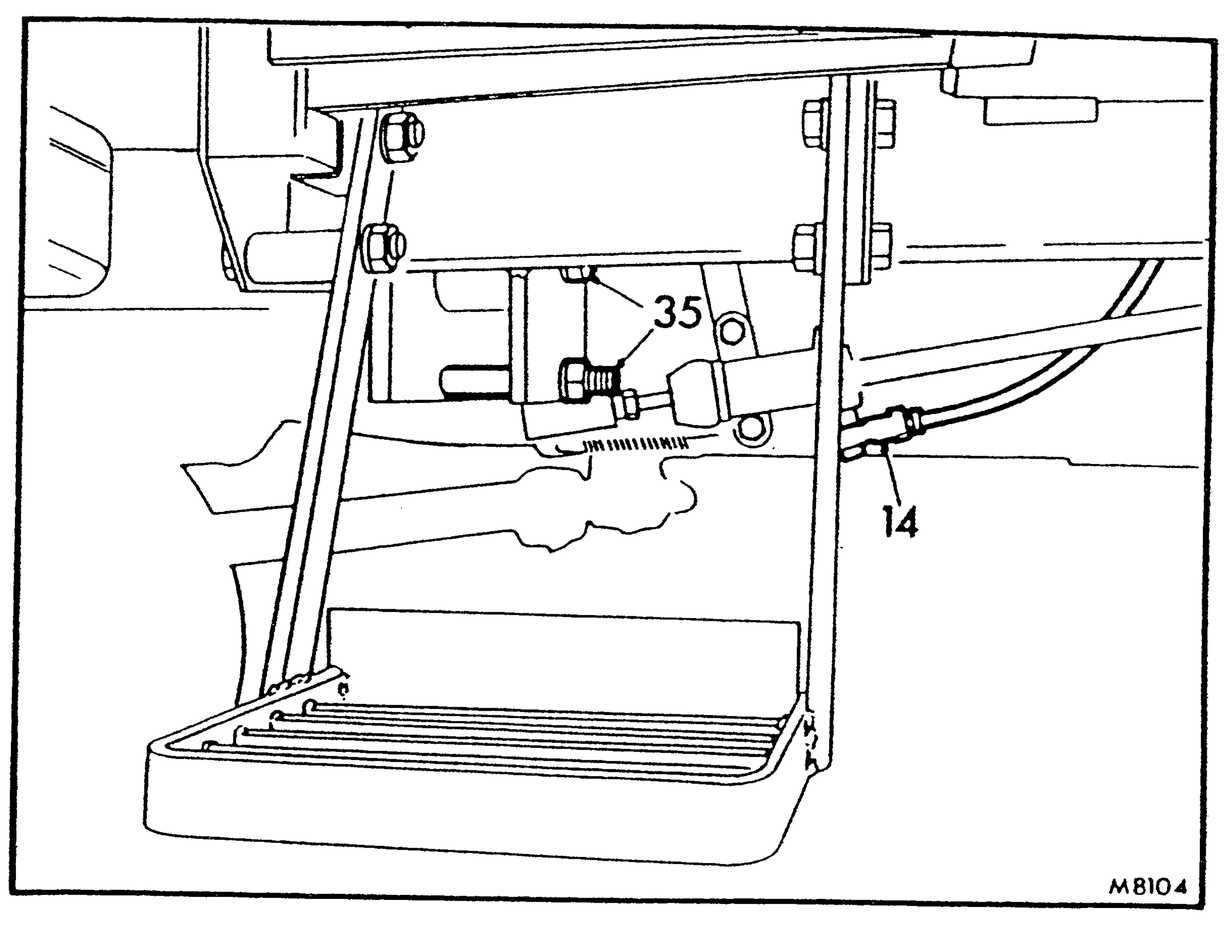

16. Disconnect P.T.O. clutch return spring at cab.
17. Disconnect hydraulic control rods.
18. Disconnect number-plate light, remove setscrews and lift off cab roof.
19. Remove cab doors.
20. Remove P.T.O. lever knob.
21. Move both change speed levers into neutral positions and unclip gaiters from cover.
22. Remove bolt securing cover and change speed linkages to gearbox top cover; noting washers and swivel bushes.
23. Remove bolts securing change speed levers to operating cross-shafts.
24. Remove differential lock and P.T.O. foot pedals.
25. Remove floor mats.
26. Remove gaiters from handbrake and P.T.O. clutch levers.
27. Remove gearbox insulation mat.
** 28. Disconnect P.T.O. connecting rod at cross-shaft arm and 4WD handle from engagement lever (if fitted).**
29. Disconnect handbrake lever linkage at balance bar.
30. Position handbrake and P.T.O. levers to rear

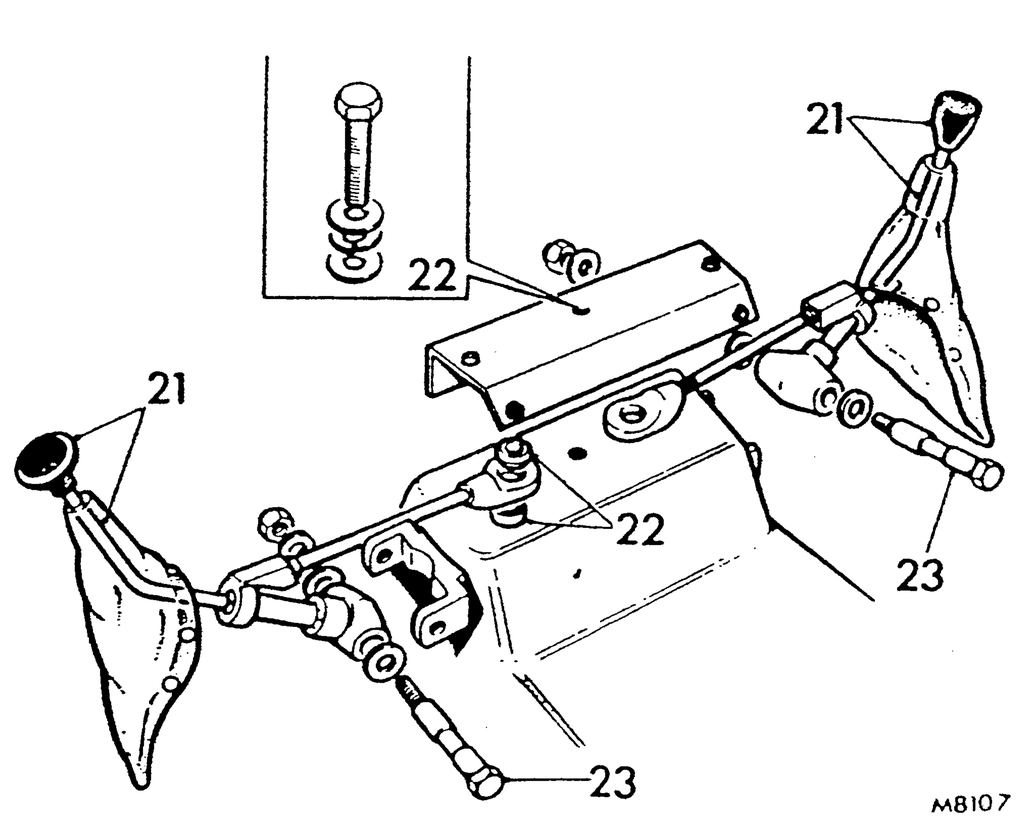

https://tractormanualz.com/

32. Unclip and disconnect pick-up hitch cable and remove P.T.O. control lever.
33. Remove cab rear window.
34. Position cab lifting beam and take weight of cab.
35. Remove cab mounting bolts from front and rear mounting brackets.
36. Carefully lift cab from tractor, ensuring pipes, cables and wires do not obstruct its removal.

Refitting

37. Position cab over tractor, lower over handbrake and P.T.O. levers, manoeuvre into position drawing pipes, cables and wires into engine compartment.
38. Loosely fit all cab mounting bolts, then secure.
39. Remove lifting beam from cab.
40. Refit cab rear window.
41. Fit P.T.O. control lever and connect pick-up hitch control cable.
42. Fit hydraulic control assembly to brake cover.
43. Connect handbrake lever linkage at balance bar.
44. Fit P.T.O. connecting rod to cross-shaft arm.
45. Refit gearbox insulation mat.
46. Refit gaiters to handbrake and P.T.O. clutch levers.
47. Refit floor mats.
48. Refit differential lock and P.T.O. foot pedals.
49. Fit bolts securing change speed levers to operating cross-shafts.
50. Noting washers and swivel bushes, fit bolt securing cover and change speed linkages to gearbox top cover.
51. Clip gaiters to cover and fit knob to P.T.O. lever.
52. Refit cab doors.
53. Position cab roof, connect number-plate light, then fit setscrews and secure cab roof.
54. Connect hydraulic control rods.
55. Connect P.T.O. return spring to cab.
56. Connect brake pipes.
57. Connect clutch pipe at slave cylinder.
58. Manoeuvre heater hoses and control cable behind engine breather tube. Refit clips to hoses and secure to block. Re-connect heater hoses.
59. Refit heater control cable to valve, re-clamp and re-clip.
60. Connect earth wire at flywheel housing.
61. Connect oil pressure gauge pipe at crankcase.
62. Connect wiring harnesses under bulkhead.
63. Connect steering hoses left- and right-hand side.
64. Secure wiring loom to right-hand side steering hoses with plastic tie.
65. Connect tractometer cable to angle drive, clip to timing cover and secure with plastic tie.
66. Connect throttle control cable and return spring.
67. Connect stop control to injection pump.
68. Refit cold start cable to bulkhead, clip to starter motor and connect to injection pump.
69. Refill cooling system. TB10.
70. Connect thermostart cable to heater plug in inlet manifold and secure with plastic tie to injector pipe.
71. Connect battery.
72. Reverse rear road wheels to their correct position and evenly tighten.
73. Bleed clutch. TB10.
74. Top up and bleed both left- and right-hand brakes.
75. Remove filler/level plug from power steering pump reservoir, and top up as necessary to the bottom of the filler level plug hole.
    NOTE: When replenishing the reservoir ensure that the front wheels are in the full right lock position and the engine is running. Operate steering from lock to lock to expel air from system, top up and repeat procedure as necessary; refit filler/level plug.

https://tractormanualz.com/

NOTES

https://tractormanualz.com/

LIST OF OPERATIONS

Heater controls
- control valve — remove and refit TB80.10.16

Heater unit
- fan — remove and refit TB80.20.11
- fan motor/blower — remove and refit TB80.20.12
- heater radiator — remove and refit TB80.20.29
- motor unit — remove and refit TB80.20.10

https://tractormanualz.com/

HEATER CONTROL VALVE – ALL MODELS

245

–Remove and refit TB80.10.16

Removing

1. Disconnect hoses at control valve.
2. Disconnect heater control cable.
3. Remove control valve from side of engine.

Refitting

4. Reverse procedure 1 to 3.

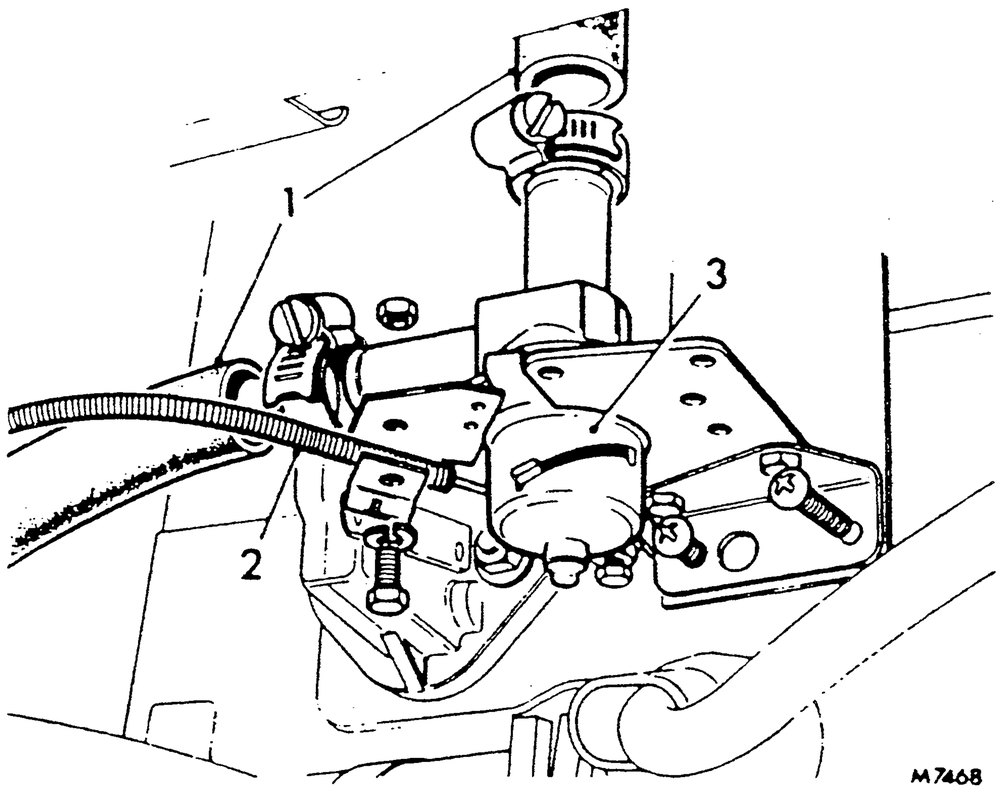

•• All models except 245••

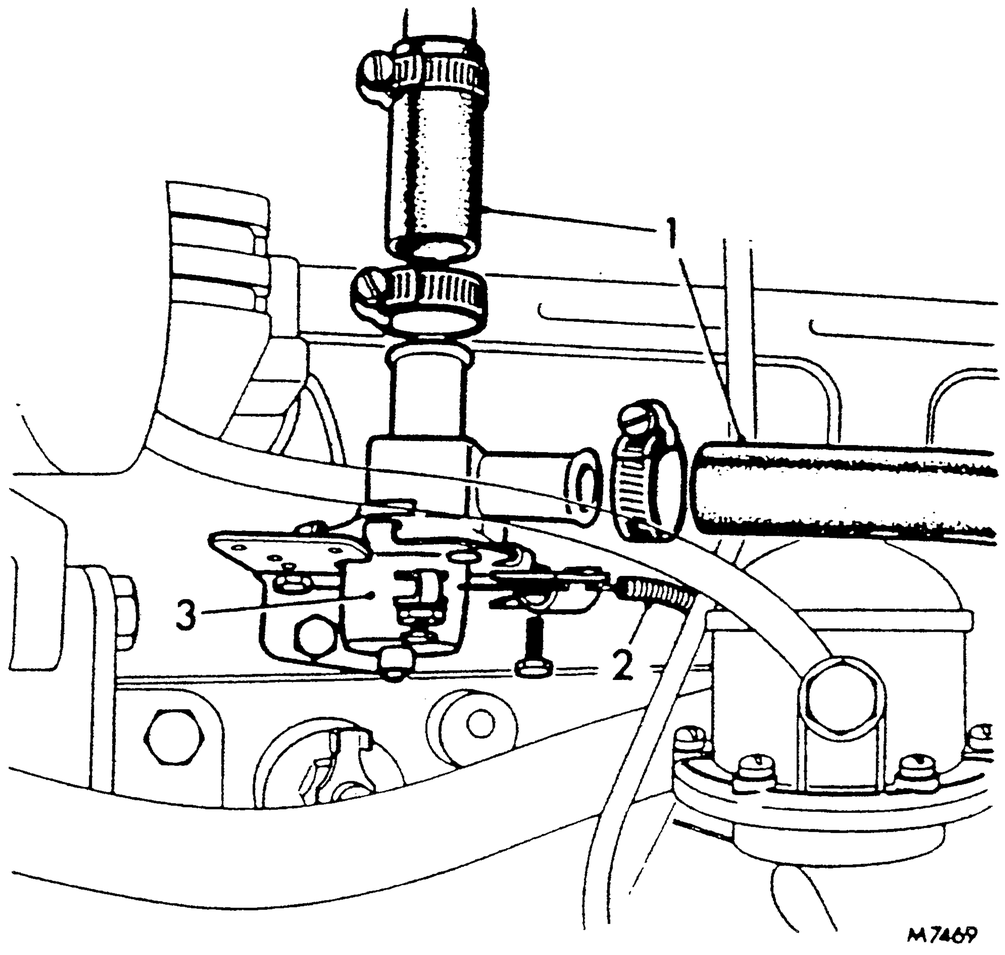

https://tractormanualz.com/

ALTERNATOR – 262/272/462/472

—Remove and refit **TB86.10.02**

Removing

1. Remove left-hand side panel and lift bonnet.
2. Disconnect earth from battery negative (—) terminal.
3. Disconnect alternator.
4. Release heater control valve from engine side cover and move aside.
5. Remove fan belt guard, alternator pivot bolt, spacer and adjusting link setscrews.
6. Remove alternator.
7. Unscrew nut and remove spring washer from alternator shaft.
8. Draw pulley from keyway in shaft, using suitable extractor.

Refitting

9. Position pulley on alternator keyed shaft and secure with nut and washer to torque in DATA.
10. Fit alternator on support bracket, enter pivot bolt and adjusting link setscrews and position fan belt on pulleys.
11. Adjust fan belt. TB26.20.09.
12. Reconnect alternator.
13. Refit heater control valve.
14. Reconnect battery.
15. Refit side panel, lower bonnet and secure.

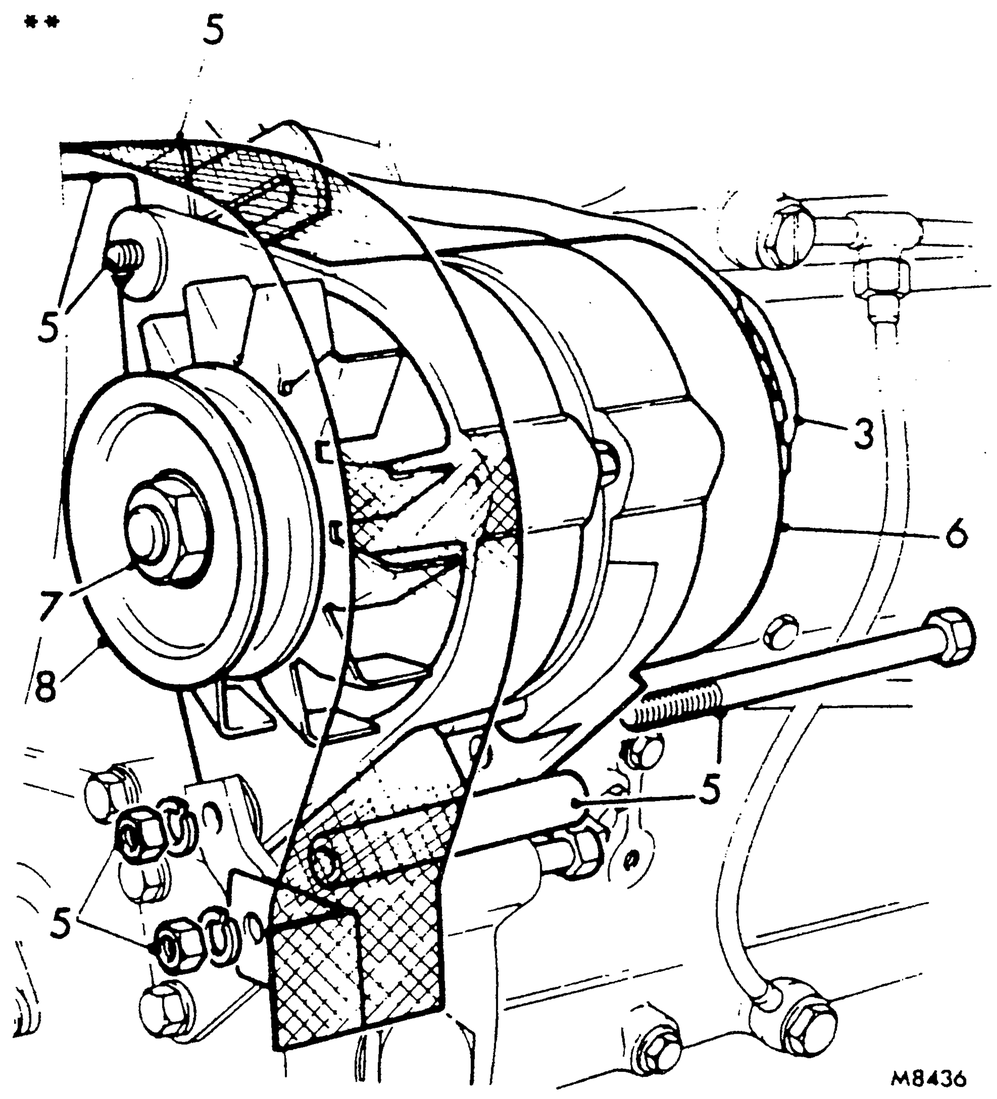

M8436

DATA

Torque tightening figures	Nm	kgf m	lbf ft
Alternator pulley nut	34	3,5	25

**ALTERNATOR — TURBOCHARGED MODELS

— Remove and refit **TB86.10.02**

Removing

1. Disconnect earth lead from battery negative (—) terminal.
2. Disconnect adjusting link setscrew.
3. Disconnect cable plug at alternator and remove splash guard.
4. Remove alternator mounting bolt and spacer, and withdraw fan belt guard.
5. Remove alternator.
6. Unscrew nut from alternator shaft and draw pulley from keyway, using a suitable puller.

Refitting

7. Fit pulley on alternator shaft and tighten to torque in DATA.
8. Reverse procedure 1 to 5, adjusting fan belt. TB26.20.09.

DATA

Torque tightening figures	Nm	kgf m	lbf ft
Alternator pulley nut	34	3,5	25**

https://tractormanualz.com/

ALTERNATOR–245

–Remove and refit **TB86.10.02**

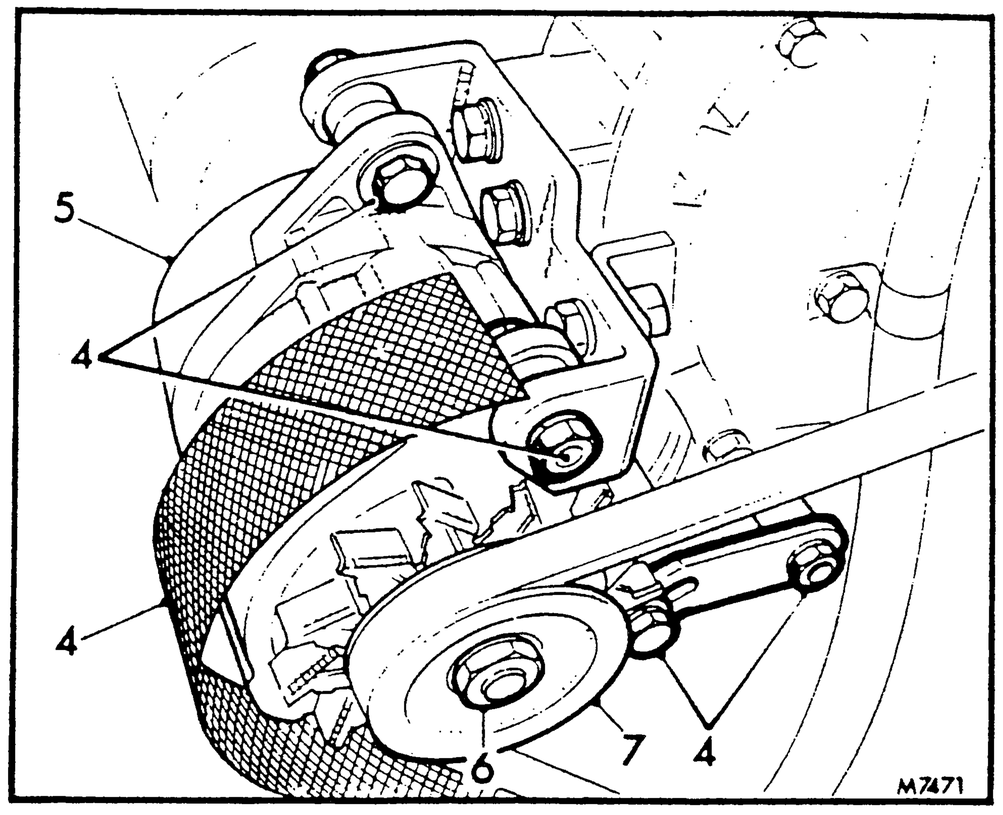

Removing

1. Remove left- and right-hand side panels and lift bonnet.
2. Disconnect earth lead from battery negative (–) terminal.
3. Disconnect alternator.
4. Remove belt guard, alternator pivot bolts and adjusting link setscrew.
5. Remove alternator.
6. Unscrew nut and remove spring washer from alternator shaft.
7. Draw pulley from keyway in shaft, using suitable puller.

Refitting

8. Position pulley on alternator keyed shaft and secure with nut and washer to torque in DATA.
9. Fit alternator on support bracket, enter pivot bolts and adjusting link setscrew and position fan belt on pulleys.
10. Adjust fan belt. TB26.20.09.
11. Reconnect alternator.
12. Reconnect battery.
13. Refit side panels.

DATA

Torque tightening figures	**Nm**	**kgf m**	**lbf ft**
Alternator pulley nut	34	3,5	25

https://tractormanualz.com/

NOTES

https://tractormanualz.com/

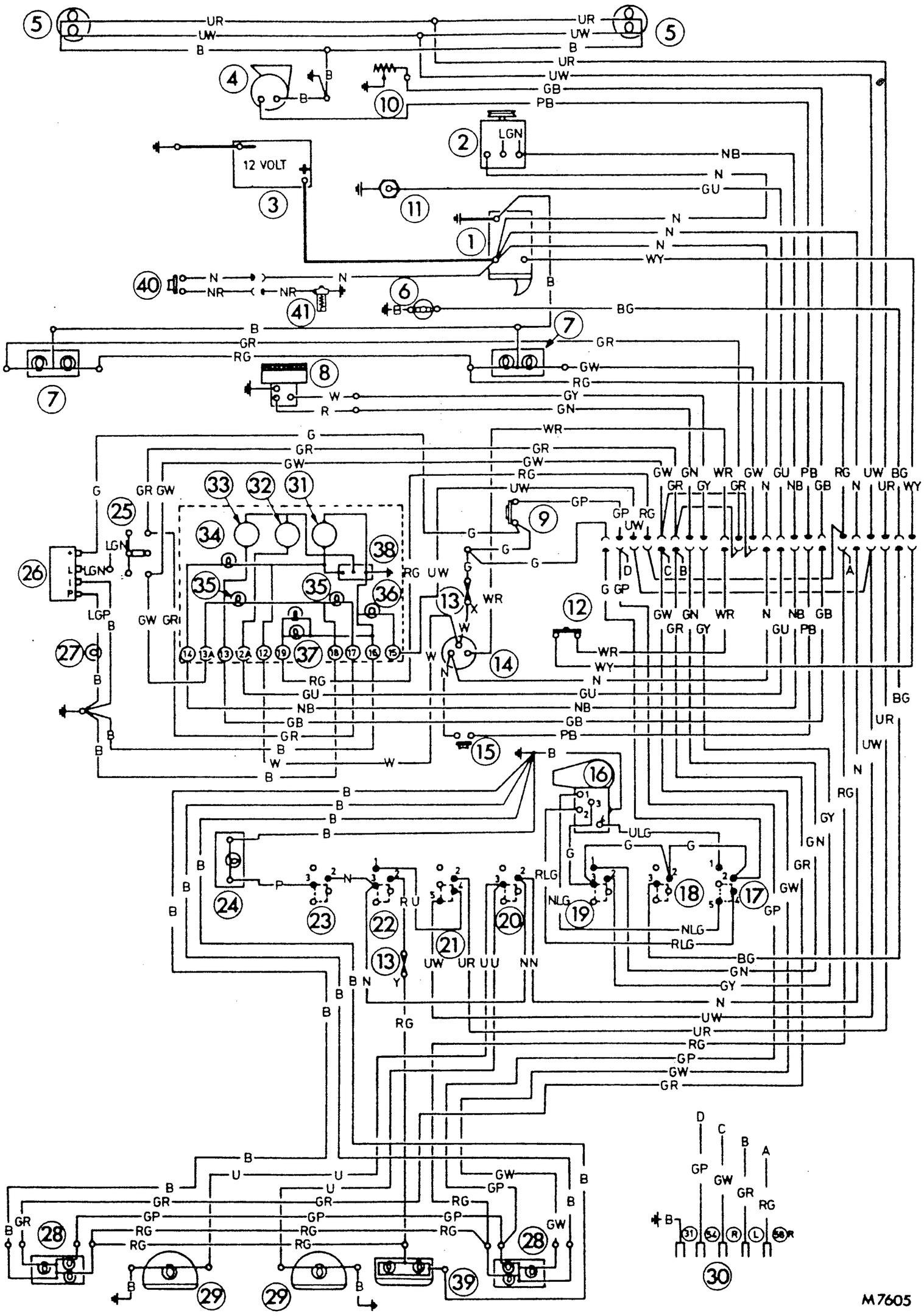
12 VOLT
LGN
PB
GB
GU
NB
WY
RLG
NLG
ULG
BG
GN
GY
GW
GP
RG
WR
UR
UW
GR
M7605

KEY TO WIRING DIAGRAM

No.	Description
1.	Starter motor
2.	Alternator
3.	Battery
4.	Horn
5.	Headlamp
6.	Washer pump
7.	Side/flasher lamp combined
8.	Heater
9.	Stop lamp switch
10.	Fuel tank unit
11.	Temperature transmitter
12.	Starter isolation switch
13.	Line fuse — X — 25 amp Line fuse — Y — 10 amp
14.	Master/starter switch
15.	Horn push
16.	Wiper motor
17.	Wiper switch
18.	Washer switch
19.	Heater switch
20.	Plough lamp switch

—○— Any terminal

—◗ Moulded connection (male)

No.	Description
21.	Main beam/dip switch
22.	Lighting switch
23.	Interior light switch
24.	Interior light
25.	Flasher switch
26.	Flasher unit
27.	Trailer flasher warning light
28.	Tail/flasher/stop lamp combined
29.	Plough lamp
30.	Trailer socket
31.	Battery condition indicator
32.	Temperature gauge
33.	Fuel gauge
34.	No-charge warning light
35.	Flasher warning light
36.	Main-beam warning light
37.	Instrument panel lights
38.	Voltage stabiliser
39.	Number plate lamp
40.	Thermostart switch (if fitted)
41.	Thermostart (if fitted)

—●— Internal connection

—c Moulded connection (female)

CABLE COLOUR CODE

B. Black.	N. Brown.	U. Blue.
G. Green.	P. Purple.	W. White.
L.G. Light Green.	R. Red.	Y. Yellow.

When a cable has two colour code letters the first denotes the main colour and the second denotes the tracer colour.

https://tractormanualz.com/

NOTES

https://tractormanualz.com/

TRACTOMETER CABLE – INNER – ALL MODELS

–Remove and refit **TB88.30.24**

Removing

1. Remove right-hand side panel and disconnect earth lead from battery negative (–) terminal.
2. Release clip from timing case remove plastic tie and disconnect cable from angle drive.
3. Remove console right-hand side panel and disconnect cable from tractometer gauge.
4. Withdraw inner cable.

Refitting

5. Lubricate inner cable and reverse procedure 1 to 4.
6. Check operation of tractometer.

TRACTOMETER ANGLE DRIVE – ALL MODELS

–Remove and refit **TB88.30.38**

Removing

1. Remove both side panels.
2. Disconnect earth lead from battery negative (–) terminal.
3. Remove cable from angle drive.
4. Remove angle drive from timing case.

Refitting

5. Fit new joint and reverse procedure 1 to 4.
6. Check operation of tractometer.

https://tractormanualz.com/

NOTES

https://tractormanualz.com/

INSTRUMENTS – ALL MODELS

–Remove and refit

Coolant temperature gauge	TB88.25.14
Fuel gauge	TB88.25.26

Removing

1. Remove the screws and detach finisher.
2. Remove screws, bezel, glass complete with seal, and instrument mask.
3. Remove clip from pillar of instrument to be removed.
4. Pull instrument from printed circuit.

Refitting

5. Renew desiccators, situated at top of panel to protect instruments against moisture. Alternatively, reactivate desiccators by heating them in an oven set at 200 to 250°C (400 to 500°F) for one hour, then allowing them to cool until they can be handled before reinstalling. Assemble unit within 20 minutes or the effectiveness of the desiccators will be impaired.
6. Reverse procedure 1 to 4, ensuring instrument panel is correctly sealed.
7. Check operation of instruments.

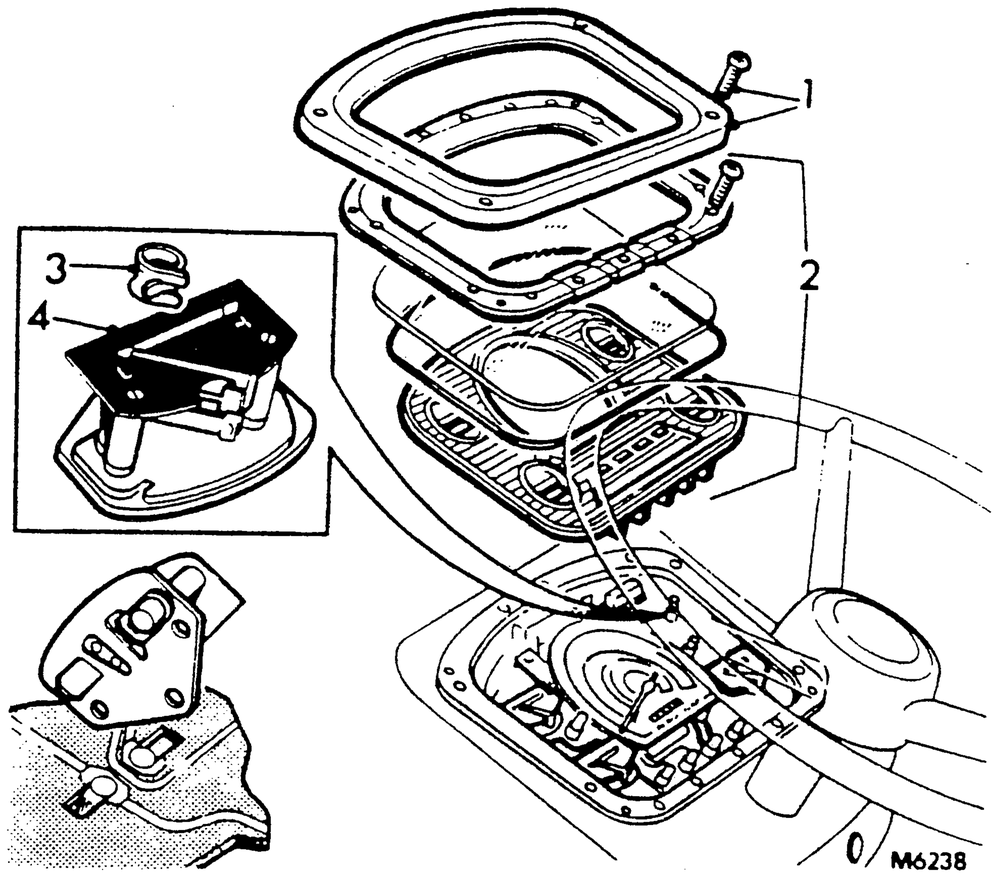

TRACTOMETER – ALL MODELS

–Remove and refit TB88.30.21

Removing

1. Remove instrument panel, see TB88.20.01.
2. Remove screws, bezel, glass complete with seal, and instrument mask.
3. Hold tractometer, using a thumb on the face at approximately the 1400 rev/min position to avoid damage as the instrument is freed, and remove the screws securing it to the case. Withdraw tractometer forward, noting the O-ring seal and foam pads.

Refitting

4. Renew foam pads and O-ring if required.
5. Renew desiccators, situated at top of panel to protect the instruments against moisture. Alternatively, reactivate desiccators by heating them in an oven set at 200 to 250°C (400 to 500°F) for one hour, then allow them to cool until they can be handled before reinstalling. Assemble unit within 20 minutes or the effectiveness of the desiccators will be impaired.
6. Reverse procedure 1 to 3, ensuring instrument panel is correctly sealed.
7. Check operation of instruments.

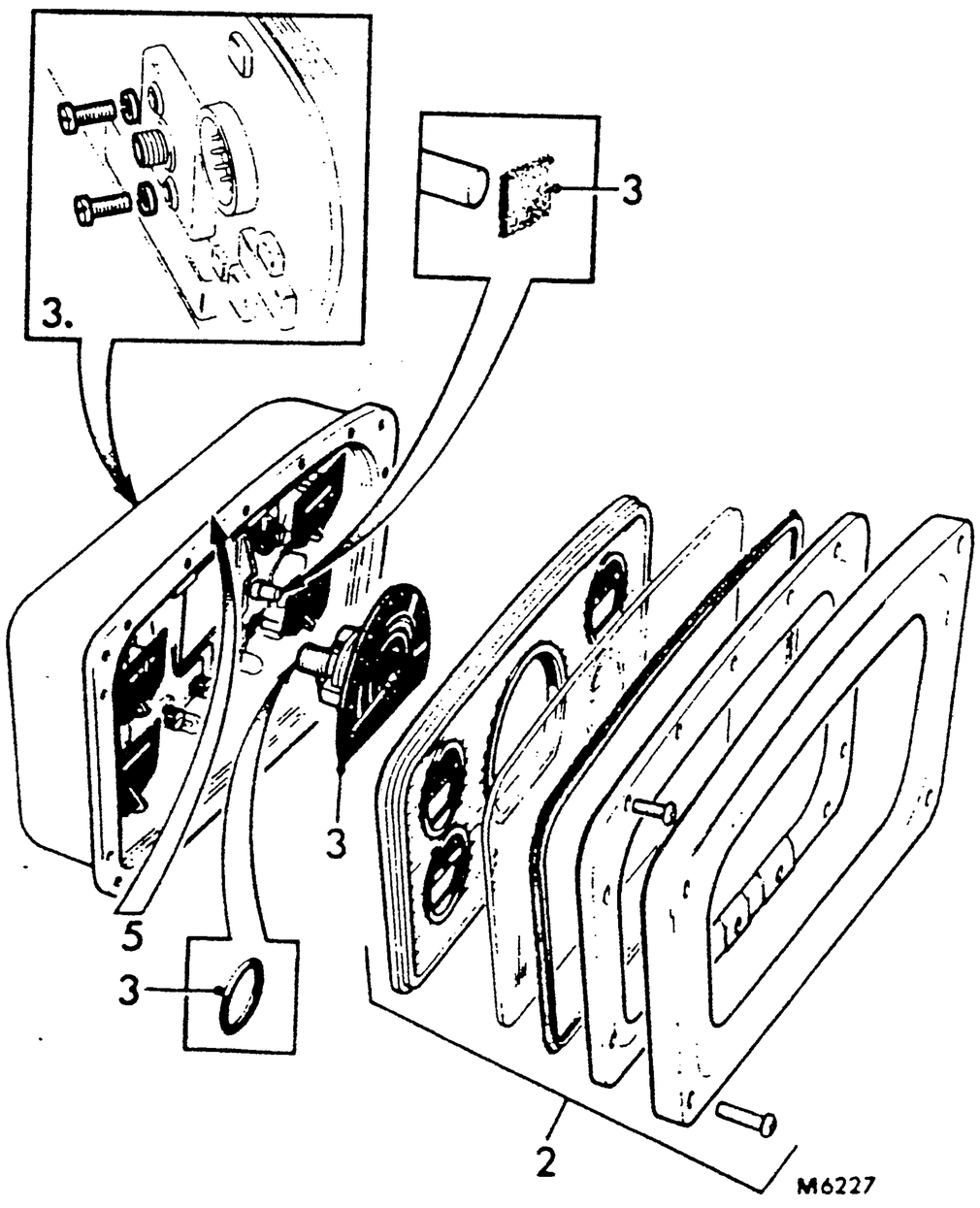

https://tractormanualz.com/

TRACTOMETER CABLE ASSEMBLY — ALL MODELS EXCEPT TURBOCHARGED

—Remove and refit **TB88.30.23**

Removing

1. Remove right-hand panel.
2. Disconnect earth lead from battery negative (—) terminal.
3. Disconnect tractometer cable at angle drive.
4. Remove plastic tie securing cable to injector pipe.
5. Remove clip from timing case.
6. Disconnect stop cable from injection pump.
7. Remove baffle board.
8. Remove both console side panels.
9. Disconnect cable from tractometer gauge.
10. Draw stop cable through bulkhead into cab.
11. Draw tractometer cable through into engine compartment and remove grommet.

Refitting

12. Position cable through grommet in bulkhead.
13. Connect cable to tractometer gauge.
14. Feed stop cable through grommet and reconnect to injection pump.
15. Position tractometer cable behind injection pump and reconnect to angle drive.
16. Refit cable clip to timing cover and secure with plastic tie to injector pipe.
17. Refit baffle board.
18. Refit both console side panels.
19. Connect battery and refit right-hand side panel.

**TRACTOMETER CABLE ASSEMBLY — TURBOCHARGED MODELS

— Remove and refit **TB88.30.23**

Removing

1. Disconnect earth lead from battery negative (—) terminal.
2. Disconnect tractometer cable at angle drive.
3. Remove plastic ties securing cable to power steering pipes (two-wheel drive only).
4. Disconnect stop control cable from injection pump.
5. Remove baffle board.
6. Remove both console side panels.
7. Disconnect cable from tractometer gauge.
8. Draw stop cable through bulkhead into cab.
9. Draw tractometer cable through into engine compartment and remove grommet.

Refitting

10. Position cable through grommet in bulkhead.
11. Connect cable to tractometer gauge.
12. Feed stop cable through grommet and reconnect to injection pump.
13. Reposition cable and connect to angle drive.
14. Secure cable to power steering pipes with plastic ties (two-wheel drive only).
15. Refit baffle board.
16. Refit both console side panels.
17. Connect battery.**

https://tractormanualz.com/

Induction and Exhaust TB30

TX 20	'Torx' screw wrench (use with 2801 and suitable torque wrench)
2801	'Torx' screw adaptor**

Clutch TB 33

18G 498	Clutch staples
18G 563 A	Double clutch centraliser
18G 563 E	Double clutch gauging fixture

Gearbox TB37

18G 207	Belt pulley unit pre-load gauge
18G 207 B	Pre-load gauge adaptor
18G 474 A	Mainshaft adjusting spanner
18G 477	Mainshaft setting gauge
18G 1020 A	Selector fork detent—ball replacer
18G 1087	Transfer gear housing oil seal remover
18G 1139 A	Mainshaft locknut spanner
18G 1231	Transfer gear housing oil seal replacer
LC 279	Mainshaft ring nut spanner
LC 280	Layshaft remover/replacer adaptors
LC 281	Mainshaft and layshaft gear bushes remover/replacer
LC 282	Layshaft end-float gauge tube
LC 283	Mainshaft dummy bearing assembly end-float

Rear Axle TB51

18G 47 AF	Differential bearing remover/adaptor; use with 18G 47 C (47)
18G 686	Axle shaft nut spanner
18G 1007	Differential needle bearing replacer

Hydraulics TB53

18G 548	Oil pressure gauge
18G 548 A	Oil pressure gauge adaptor (2 off may be required)
18G 1136	Belleville spanner
18G 1137	Hydraulic pump drive gear remover/adaptor

Front Axle TB54

18G 1141	Bush replacer (2-wheel drive)
LC 284—9	Drive shaft remover; use with MS 284 slide hammer (4-wheel drive)
LC 305	Stub axle pin remover (4-wheel drive)
LC 306	Pinion setting tool (4-wheel drive)
LC 309	Pinion nut spanner (4-wheel drive)
LC 310	Hub nut spanner (4-wheel drive)
LC 550-14	Drive shaft oil seal replacer; use with MS 550 handle (4-wheel; drive)

Steering TB57

MS 62A	O-ring and Kin ring fitting tool
MS 63	Plate springs installing tool
MS 64	Power steering pressure test kit
MS 64—2	Power steering pressure test adaptor

Brakes TB70

18G 1036	Final drive seal protector

https://tractormanualz.com/

SERVICE TOOLS

Unless otherwise stated all service tools mentioned in this manual must be obtained direct from the tool manufacturers:

V. L. Churchill & Co. Limited
P.O. Box 3
London Road
Daventry
Northants NN11 4NF
England

Cab Lifting Beam. This may be purchased from:

Chieftain Forge Limited
Burnside Road
Bathgate
West Lothian EH48 4PU
Scotland

General

18G 2	Gear and pulley remover
18G 47 C (47)	Hand press—basic tool
18G 134 (550)	Bearing and oil seal replacer— basic tool
18G 257 (7065 M)	Circlip pliers—large
18G 275 P	Circlip pliers points
18G 257 Q	Circlip pliers points
18G 284 (284)	Impulse extractor
18G 372	Torque wrench (30 to 140 lbf ft)
18G 537	Torque wrench (10 to 50 lbf ft)
18G 1004	Circlip pliers
2700	Tractor splitting kit

Engine—TB12

18G 29	Valve lapping tool—all engines
18G 45	Valve spring comnpressor—3 cyl. only
18G 55 A (38 U3)	Piston ring compressor—all engines
18G 134 CP	Crankshaft rear oil seal replacer
18G 213 A	Injector sleeve tap and wrench
18G 213 D	Injector sleeve remover
18G 227 C	Cylinder liner remover
18G 227 E	Cylinder liner remover adaptor pad
18G 228	Valve guide remover
18G 228-1	Valve guide replacer
18G 230	Valve seat cutter pilot
18G 231	Gear and pulley remover—basic tool
18GH 231 B	Gear and pulley remover
18G 231 C	Gear and pulley remover adaptor
18G 231 N	Gear and pulley remover adaptor
18G 284 AAH	Valve seat remover; use with 18G 284 (284)
18G 284 P	Injector remover; use with 18G 284 (284)—all engines
18G 396	Cylinder head nut spanner
18G 616	Connecting rod bush remover/replacer
18G 1110	Crankshaft rear oil seal protector sleeve
18G 1111	Timing cover oil seal remover/replacer—all engines
18G 1185	Crowfoot wrench
18G 1186	Engine balancer bush remover/replacer
18G 1229	Crankshaft gear remover—3 cyl. only
18G 1230	Crankshaft front oil seal replacer—3 cyl. only
LC 173	Injector sleeve expander—top
LC 174	Injector sleeve expander—bottom
LC 176	Exhaust valve seat insert replacer
LC 6118	Valve spring compressor—basic tool
LC 6118—4	Valve spring compressor stirrup and adaptor
LC 6118—6	Valve spring compressor adjustable stirrup
MS 73	Valve seat cutter complete kit—3 cyl. only
MS 76	Basic handle set—valve seat cutting
MS 150-8.5	Adjustable valve seat cutter pilot
MS 621	Adjustable valve seat cutter
MS 656	Adjustable valve seat cutter
PD 1D	Valve guide extractor—main tool—3 cyl. only
PD 1D-1A	Valve guide remover/replacer adaptor set—3 cyl. only
PD 1D-4	Adaptor for PD 1D—3 cyl. only
PD 145	Crankshaft rear oil seal replacer/adaptor—3 cyl. only
PD 150A	Cylinder liner remover/replacer—main tool—3 cyl. only
PD 150-1B	Adaptor for PD 150—3 cyl. only
PD 6118—3	Valve spring compressor adaptor
6000 C	Diesel compression tester
6000C—18	Universal adaptor set— compression tester

Fuel System TB19

MS 67 B	DPA fuel pumps—universal timing gauge—all engines and pumps
PD 67 B—1	Adaptor for tool MS 67 B—3 cyl. engine only

https://tractormanualz.com/

NOTES

https://tractormanualz.com/