CATERPILLAR®

SENR7148-02
July 1976

Specifications

D4D Tractor Power Train

7R1-UP
47H1-UP
49J1-UP
59J1-UP
60J1-UP
61J1-UP
65J1-UP
66J1-UP
69K1-UP
74U1-UP
82J1-UP
83J1-UP
97F1-UP

INTRODUCTION

The specifications given in this book are on the basis of information available at the time the book was written. These specifications give the torques, operating pressure, measurements of new parts, adjustments and other items that will affect the service of the product.

When the words "use again" are in the description, the specification given can be used to determine if a part can be used again. If the part is equal to or within the specification given, use the part again.

When the word "permissible" is in the description, the specification given is the "maximum or minimum" tolerance permitted before adjustment, repair and/or new parts are needed.

A comparison can be made between the measurements of a worn part, and the specifications of a new part to find the amount of wear. A part that is worn can be safe to use if an estimate of the remainder of its service life is good. If a short service life is expected, replace the part.

NOTE: The specifications given for "use again" and "permissible" are intended for guidance only and Caterpillar Tractor Co. hereby expressly denies and excludes any representation, warranty or implied warranty of the reuse of any component.

77200X1

NOTE: For Systems Operation and Testing and Adjusting, make reference to the D4D POWER TRAIN, Form No. REG00653. For POWER SHIFT TRANSMISSION TESTING AND ADJUSTING see Form No. REG01337 and REG01338.

NOTE: The "C" is an indication of a change from the former issue.

INDEX

GENERAL TIGHTENING TORQUE FOR BOLTS, NUTS AND TAPERLOCK STUDS

The following charts give the standard torque values for bolts, nuts and taperlock studs of SAE Grade 5 or better quality. Exceptions are given in the component Disassembly and Assembly.

THREAD DIAMETER		STANDARD TORQUE	
inches	millimeters	lb. ft.	mkg

Standard thread

Use these torques for bolts and nuts with standard threads.

1/4	6.35	9 ± 3	1.24 ± 0.4
5/16	7.94	18 ± 5	2.5 ± 0.7
3/8	9.53	32 ± 5	4.4 ± 0.7
7/16	11.11	50 ± 10	6.9 ± 1.4
1/2	12.70	75 ± 10	10.4 ± 1.4
9/16	14.29	110 ± 15	15.2 ± 2.0
5/8	15.88	150 ± 20	20.7 ± 2.8
3/4	19.05	265 ± 35	36.6 ± 4.8
7/8	22.23	420 ± 60	58.1 ± 8.3
1	25.40	640 ± 80	88.5 ± 11.1
1 1/8	28.58	800 ± 100	110.6 ± 13.8
1 1/4	31.75	1000 ± 120	138 ± 16.6
1 3/8	34.93	1200 ± 150	166 ± 20.7
1 1/2	38.10	1500 ± 200	207 ± 27.7

Use these torques for bolts and nuts on hydraulic valve bodies.

5/16	7.94	13 ± 2	1.8 ± 0.3
3/8	9.53	24 ± 2	3.3 ± 0.3
7/16	11.11	39 ± 2	5.4 ± 0.3
1/2	12.70	60 ± 3	8.3 ± 0.4
5/8	15.88	118 ± 4	16.3 ± 0.5

Taperlock stud

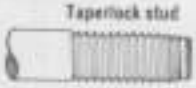

Use these torques for studs with Taperlock threads.

1/4	6.35	5 ± 2	0.69 ± 0.3
5/16	7.94	10 ± 3	1.4 ± 0.4
3/8	9.53	20 ± 3	2.8 ± 0.4
7/16	11.11	30 ± 5	4.1 ± 0.7
1/2	12.70	40 ± 5	5.5 ± 0.7
9/16	14.29	60 ± 10	8.3 ± 1.4
5/8	15.88	75 ± 10	10.4 ± 1.4
3/4	19.05	110 ± 15	15.2 ± 2.0
7/8	22.23	170 ± 20	23.5 ± 2.8
1	25.40	260 ± 30	35.9 ± 4.1
1 1/8	28.58	320 ± 30	44.2 ± 4.1
1 1/4	31.75	400 ± 40	55 ± 5.5
1 3/8	34.93	480 ± 40	66 ± 5.5
T95416-6 1 1/2	38.10	550 ± 50	76 ± 7

FLEXIBLE COUPLING DRIVE
(Power Shift)
(Earlier 5S3740)

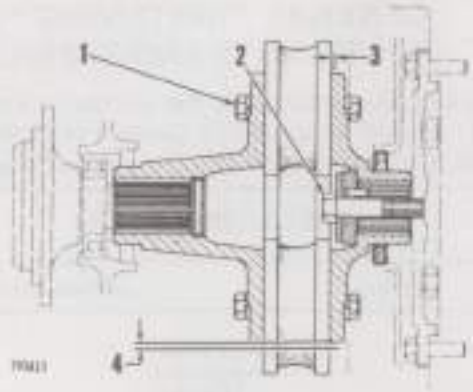

(1) Torque for bolts ..... 80 ± 5 lb.ft. (11.1 ± 0.7 mkg)

(2) Torque for bolt ..... 160 ± 10 lb.ft. (22.1 ± 1.4 mkg)

(3) Maximum permissible out of square of the face of flange in relation to the input shaft of the torque converter ..... .026 in. (0.66 mm)

(4) Maximum permissible out of round of output flange in relation to the input shaft of the torque converter ..... .080 in. (2.03 mm)

FLEXIBLE COUPLING DRIVE
(Power Shift)
(Later 5S3740)

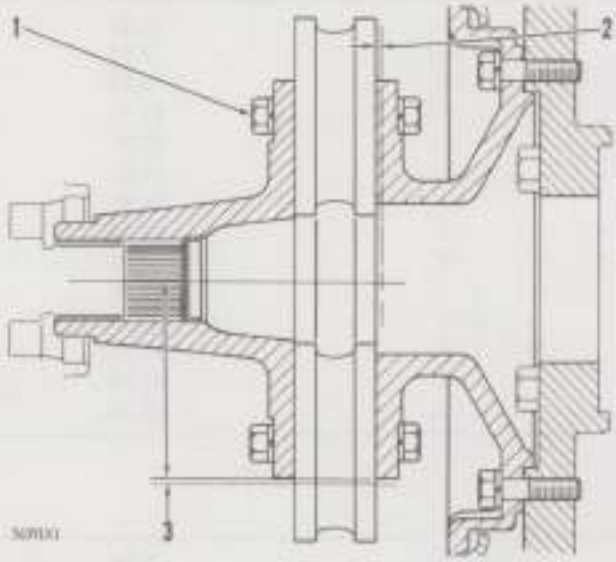

(1) Torque for bolts ..... 80 ± 5 lb.ft. (11.1 ± 0.7 mkg)

(2) Maximum permissible out of square of the face of flange in relation to the input shaft of the torque converter ..... .026 in. (0.66 mm)

(3) Maximum permissible out of round of output flange in relation to the input shaft of the torque converter ..... .080 in. (2.03 mm)

C

FLEXIBLE COUPLING DRIVE
(Power Shift)
(6P5020)

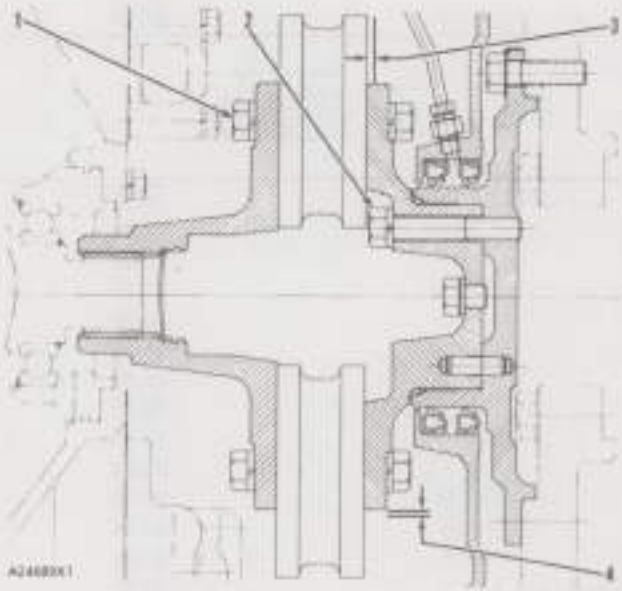

(1) Torque for bolts ..... 80 ± 5 lb. ft. (11.1 ± 0.7 mkg)

(2) Torque for bolts ..... 95 ± 5 lb. ft. (13.1 ± 0.7 mkg)

(3) Maximum permissible out of square of the face of flange in relation to the input shaft of the torque converter ..... .026 in. (0.66 mm)

(4) Maximum permissible out of round of output flange in relation to the input shaft of the torque converter ..... .080 in. (2.03 mm)

NOTE: Fill the grease lines and the area between the seals with grease before installing in the vehicle.

NOTE: FOR TORQUE VALUES NOT GIVEN, SEE THE FIRST PAGE OF SPE[illegible]NING TORQUES

CHECKING AND ADJUSTING ALIGNMENT OF THE FLEXIBLE COUPLING DRIVE
(Power Shift)

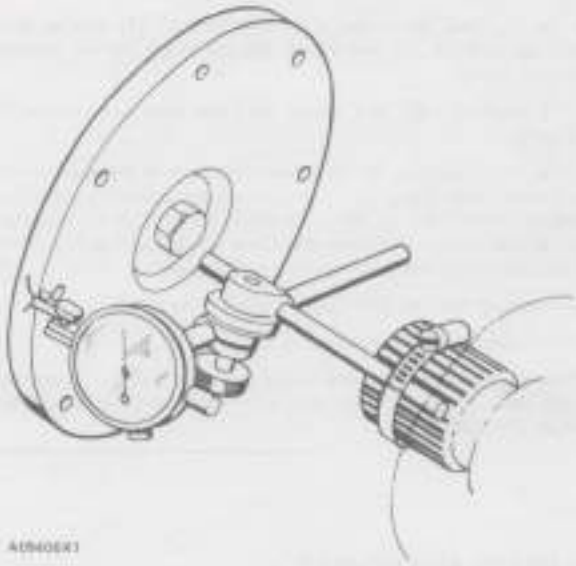

A0940EX1

1. Remove the bolts, joints and torque converter flange.
2. Fasten a 3/8 in. diameter rod 3 in. (76.2 mm) long to the torque converter input shaft with a 1J9778 Hose Clamp. Install a 7H1948 Snug onto the rod. Assemble a 7H1942 Indicator (with a 7H1940 Universal Attachment), and 7H1945 Holding Rod into the 7H1948 Snug.
3. Put the universal attachment on the outside diameter of the engine output flange. Rotate the indicator until it stops on "0". Turn the torque converter input shaft 360°. Record the indicator measurement at each 90° of rotation.
4. The total indicator reading through 360° of rotation must not be more than .080 in. (2.03 mm). The alignment can be made correct by loosening the engine rear bolts and moving the engine from side to side. If the alignment up and down is not correct, install or remove shims under the engine rear supports.
5. Remove the universal attachment. Put the face of the 7H1942 Indicator rod against the engine flange between the bolt holes and outside diameter of the flange. Turn the indicator to "0".
6. Turn the torque converter input shaft 360°. Record the indicator measurement at each 90° of rotation. The total indicator reading through 360° of rotation must not be more than .026 in. (0.66 mm). The alignment can be made correct by loosening the engine front support bolts and moving the front of the engine side to side.
7. Check the vertical and horizontal alignment again. When the alignment is correct, tighten the engine mount bolts.

Front support bolts	400 ± 40 lb. ft. (55.3 ± 5.5 mkg)
Rear support bolts	400 ± 40 lb. ft. (55.3 ± 5.5 mkg)

NOTE: If the alignment is off by a large amount, inspect for the cause. If the frame is bent, it can be straightened. If the engine front support is badly worn, a replacement is needed.

Torque for the bolts that hold the engine rear support brackets to the side of the main frame	225 ± 25 lb. ft. (31.1 ± 3.5 mkg)

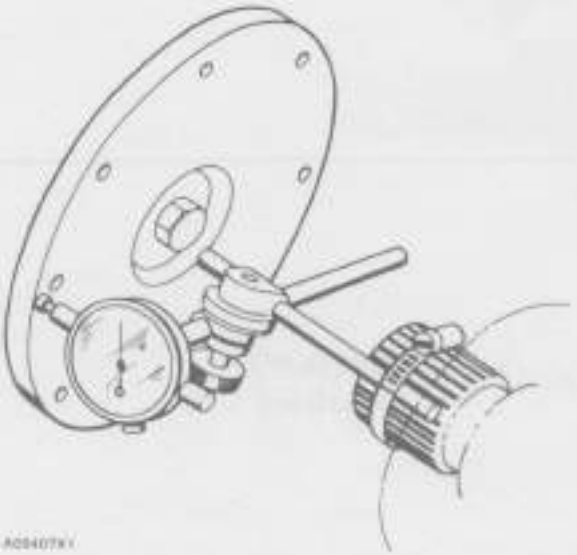

A0940TX1

FLYWHEEL CLUTCH AND CONTROLS
(Direct Drive)

FLYWHEEL CLUTCH ADJUSTMENT

1. Remove the clutch inspection cover from housing (3).
2. Turn the flywheel until one plate and locknut (1) can be seen. Loosen the locknut (1) two turns. Hit the plate lightly to make certain it is loose.
3. Turn the flywheel 180° and loosen the other plate and locknut (1) as in Step 2.
4. Turn the adjusting ring (2) to increase tension of flywheel clutch control lever when engaging clutch. Locate the adjusting ring (2) at a point so that a force of 35 to 45 lbs. (15.9 to 20.4 kg) is needed to engage the clutch. (Measure this force needed at the top of the flywheel clutch control lever without the handle).
5. Tighten each of the two locknuts (1) against the plates.
6. Install the clutch inspection cover to housing (3).

NOTE: After an adjustment is made to the flywheel clutch, it should be followed by an adjustment of the FLYWHEEL CLUTCH AND INTERLOCK LINKAGE.

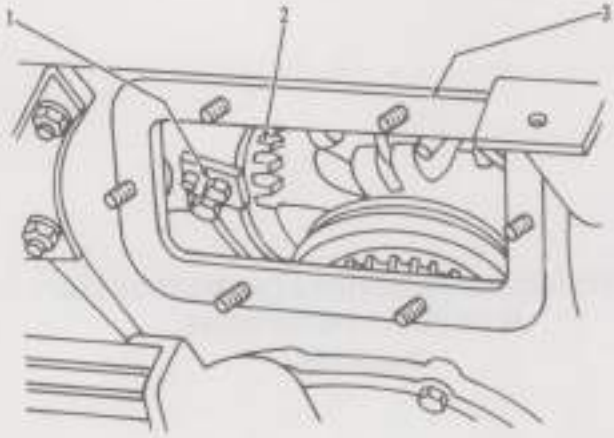

CLUTCH BRAKE ADJUSTMENT

1. Put the flywheel clutch control lever in the disengaged (not engaged) position.
2. Loosen locknut (4) and turn adjusting nut (3) to obtain dimension (A). Dimension (A) is the distance, 3.44 in. (87.4 mm), from the top of the brake loading spring to the top of washer (2). Tighten locknut (4).
3. Loosen locknut (5) and hold flywheel clutch control lever in the most forward position. Turn adjusting bolt (1) until the brake band makes some contact (not tight) with the brake drum.
4. Release the flywheel clutch control lever. Turn the adjusting bolt (1) two complete clockwise revolutions.
5. Tighten locknut (5).

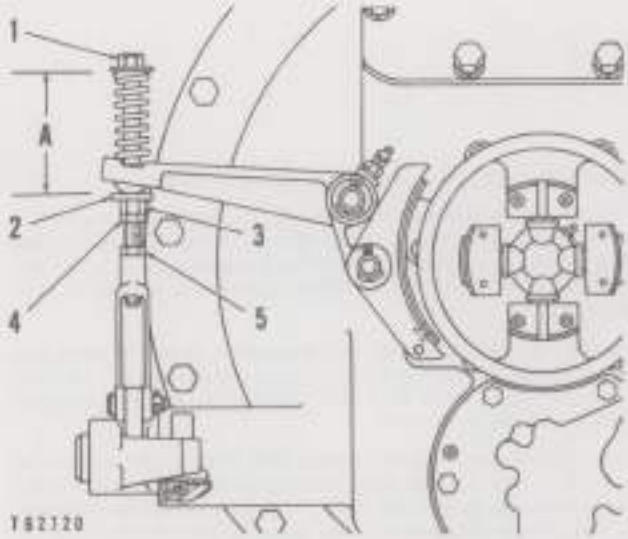

DRIVE SHAFT
(Direct Drive)

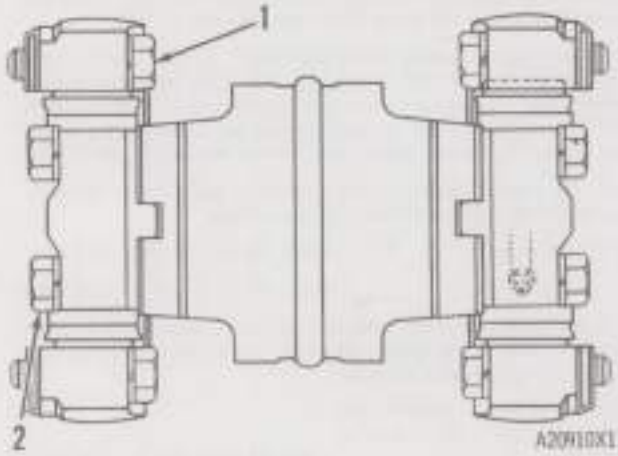

(1) Torque for 8 bolts ..... 20 to 26 lb. ft. (2.8 to 3.6 mkg)

(2) Torque for 8 bolts ..... 24 to 27 lb. ft. (3.3 to 3.7 mkg)

NOTE: FOR TORQUE VALUES NOT GIVEN, SEE THE FIRST PAGE OF SPECIFICATIONS FOR GENERAL TIGHTENING TORQUES

TORQUE CONVERTER

(Power Shift)

(1T750)

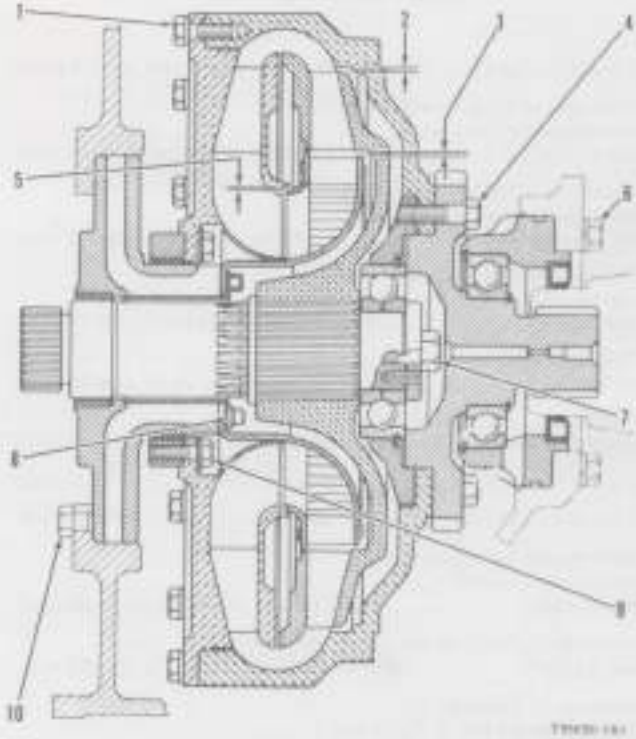

(1) Torque for bolts ..... 20 ± 1 lb. ft. (2.8 ± 0.1 mkg)

(2) Clearance between housing and turbine:

Across the diameter ..... .020 to .040 in. (0.51 to 1.02 mm)

Maximum permissible clearance:

Across the diameter ..... .045 in. (1.14 mm)

(3) Clearance between stator and turbine:

Across the diameter ..... .012 to .018 in. (0.30 to 0.46 mm)

Maximum permissible clearance:

Across the diameter ..... .0225 in. (0.571 mm)

(4) Torque for bolts ..... 36 ± 2 lb. ft. (5.0 ± 0.3 mkg)

(5) Clearance between stator and impeller:

Across the diameter ..... .012 to .018 in. (0.31 to 0.46 mm)

Maximum permissible clearance:

Across the diameter ..... .021 in. (0.53 mm)

(6) Torque for bolts ..... 36 ± 2 lb. ft. (5.0 ± 0.3 mkg)

(7) Torque for bolt ..... 81 ± 4 lb. ft. (11.2 ± 0.5 mkg)

(8) Torque for bolts ..... 20 ± 1 lb. ft. (2.8 ± 0.1 mkg)

(9) Torque for bolts ..... 20 ± 1 lb. ft. (2.8 ± 0.1 mkg)

(10) Torque for bolts (Housing to torque converter) ..... 36 ± 2 lb. ft. (5.0 ± 0.3 mkg)

(11) Install dowel to a distance of .... .69 ± .02 in. (17.5 ± 0.5 mm)

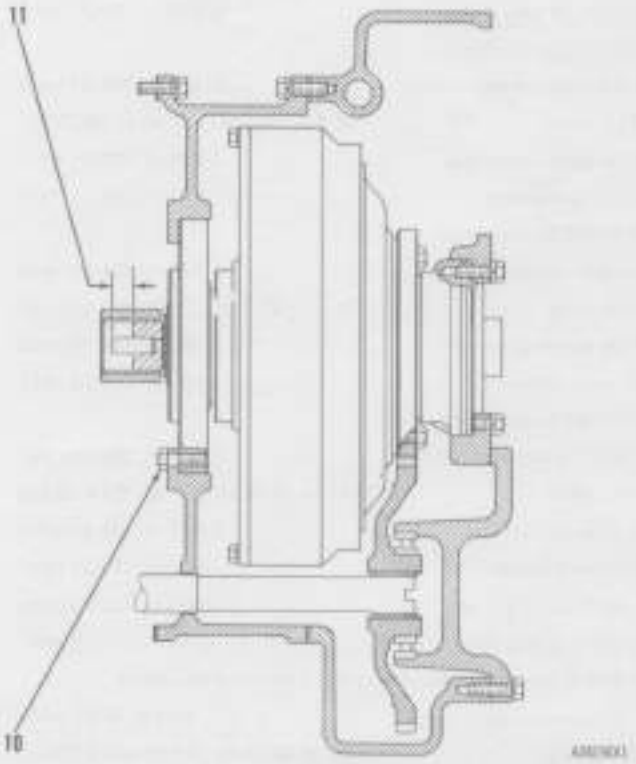

C

TORQUE CONVERTER USED WITH 6P3240 TRANSMISSION ARRANGEMENT (For 54 Winch)

TRANSMISSION
(Power Shift)

(1) Torque for bolts ..... 80 to 90 lb.ft. (11.1 to 12.4 mkg)

(2) Thickness of three new discs and two new plates for No. 3 and No. 5 clutches ..... 1.034 to 1.064 in. (26.26 to 27.03 mm)

(3) Thickness of four new discs and three new plates for No. 2 clutch ..... 1.461 to 1.503 in. (37.11 to 38.18 mm)

(4) Thickness of five new discs and four new plates for No. 1 clutch ..... 1.888 to 1.942 in. (47.96 to 49.33 mm)

Thickness of one new 3S7981 Disc ..... .180 to .186 in. (4.57 to 4.72 mm)

Thickness of one new 2P2903 or 3P8393 Plate ..... .247 to .253 in. (6.27 to 6.43 mm)

(5) Torque for bolts (nine) ..... 80 to 90 lb.ft. (11.1 to 12.4 mkg)

(6) Torque for bolts (two) ..... 80 to 90 lb.ft. (11.1 to 12.4 mkg)

(7) Thickness of two new discs and one new plate for No. 4 clutch ..... .607 to .625 in. (15.42 to 15.88 mm)

(8) Diameter of shafts for the planet gears for No. 4 clutch ..... .7930 to .7934 in. (20.142 to 20.152 mm)

(9) Diameter of shafts for the planet gears for No. 1, No. 2 and No. 3 clutches ..... .7930 to .7934 in. (20.142 to 20.152 mm)

(10) Torque for carrier to retainer bolt ..... 32 to 36 lb.ft. (4.4 to 5.0 mkg)

(11) Length of pins (five) ..... 2.688 in. (68.27 mm)

(12) 7S8553 Springs (ten):

Length under test force ..... 1.735 in. (44.07 mm)

Test force ..... 55.2 to 64.8 lb. (25.00 to 29.36 kg)

Free length after test ..... 1.990 in. (50.55 mm)

Outside diameter ..... .562 in. (14.27 mm)

(13) 4M9592 Springs (ten):

Length under test force ..... 1.375 in. (34.92 mm)

Test force ..... 24.9 to 27.5 lb. (11.26 to 12.45 kg)

Free length after test ..... 1.760 in. (44.70 mm)

Outside diameter ..... .562 in. (14.27 mm)

(14) 9H5537 Springs (ten):

Length under test force ..... 1.843 in. (46.81 mm)

Test force ..... 26.45 to 31.05 lb. (11.98 to 14.12 kg)

Free length after test ..... 2.468 in. (62.69 mm)

Outside diameter ..... .562 in. (14.27 mm)

(15) Length of pins (five) ..... 5.00 in. (127.0 mm)

(16) Length of pins (five) ..... 6.94 in. (176.3 mm)

(17) 4M5016 Springs for No. 1 and No. 2 clutches (ten each):

Length under test force ..... 2.68 in. (68.1 mm)

Test force ..... 25.76 to 30.24 lb. (11.68 to 13.72 kg)

Free length after test ..... 3.28 in. (83.3 mm)

Outside diameter ..... .563 in. (14.30 mm)

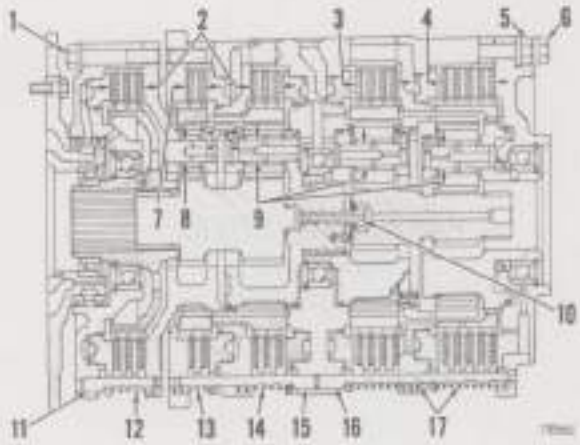

4S8686

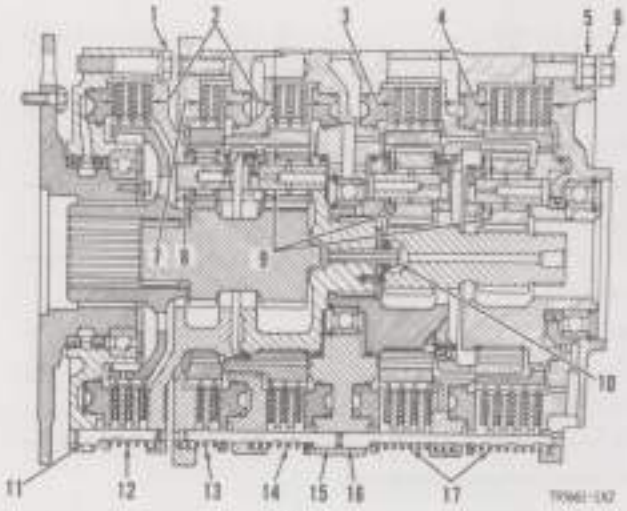

2P4416

NOTE: FOR TORQUE VALUES NOT GIVEN, SEE THE FIRST PAGE OF SPECIFICATIONS FOR GENERAL TIGHTENING TORQUES

TRANSMISSION
(Direct Drive)

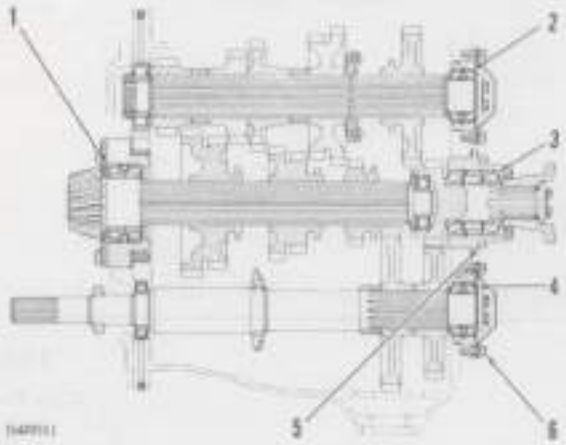

(1) Expected movement of shaft forward and back for correct clearance with a (new) bearing ..... .003 to .009 in. (0.08 to 0.23 mm)

Maximum permissible end clearance ..... .012 in. (0.30 mm)

(2) Expected movement of shaft forward and back for correct clearance with a (new) bearing ..... .001 to .015 in. (0.02 to 0.38 mm)

Maximum permissible end clearance ..... .018 in. (0.46 mm)

(3) Expected movement of shaft forward and back for correct clearance with a (new) bearing ..... .001 to .013 in. (0.02 to 0.33 mm)

Maximum permissible end clearance ..... .017 in. (0.43 mm)

(4) Expected movement of shaft forward and back for correct clearance with a (new) bearing ..... .001 to .015 in. (0.02 to 0.38 mm)

Maximum permissible end clearance ..... .018 in. (0.46 mm)

(5) Torque for bolts ..... 80 to 90 lb. ft. (11.1 to 12.4 mkg)

(6) Torque for bolts (upper and lower countershafts) ..... 32 to 38 lb. ft. (4.4 to 5.3 mkg)

FLYWHEEL CLUTCH AND INTERLOCK LINKAGE
(Direct Drive)

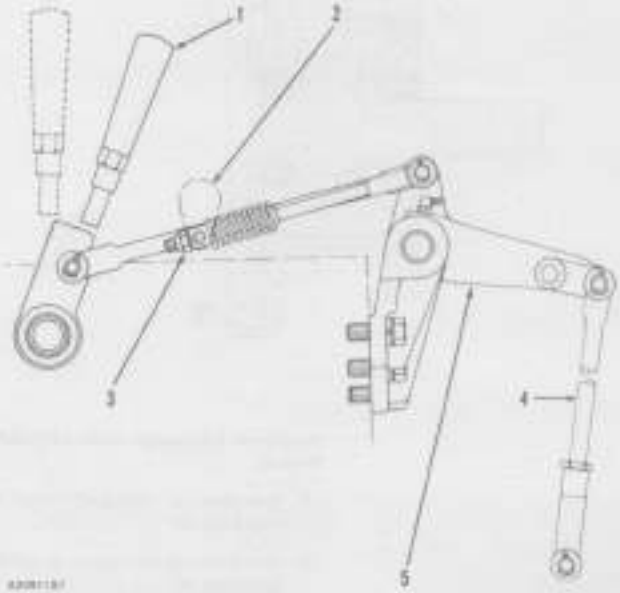

ADJUSTMENT OF LINKAGE

1. Force needed at end of lever (1) (without handle), to engage clutch when correctly adjusted ..... 35 to 45 lbs. (15.9 to 20.4 kg)
2. With clutch engaged, adjust length of rod (4) until lever (1) is in a vertical position.
3. With clutch disengaged (not engaged), adjust nut (3) until lever (2) on interlock shaft is in a vertical position. Then loosen nut (3) three complete turns.

NOTE: Rod (4) is to be assembled in hole at end of lever (5).

TRANSFER GEARS
(With Power Take-Off Shaft)
(Power Shift)

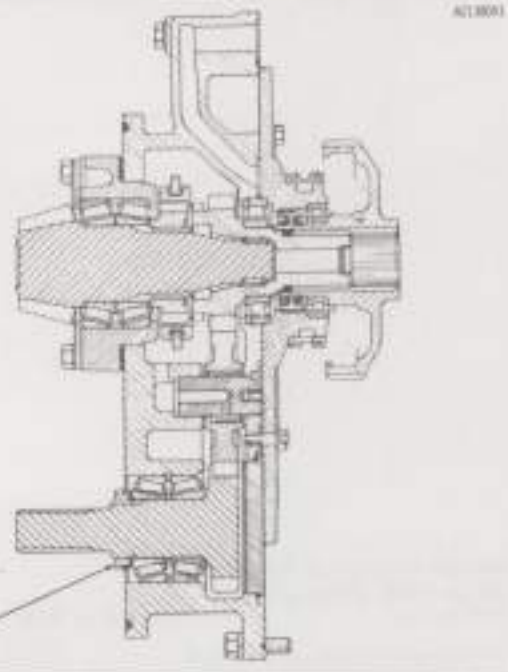

(1) Torque nut to ..... 60 ± 10 lb. ft. (8.3 ± 1.4 mkg)

C

TRANSFER GEARS
(With Power Take-Off Shaft)
(Power Shift)

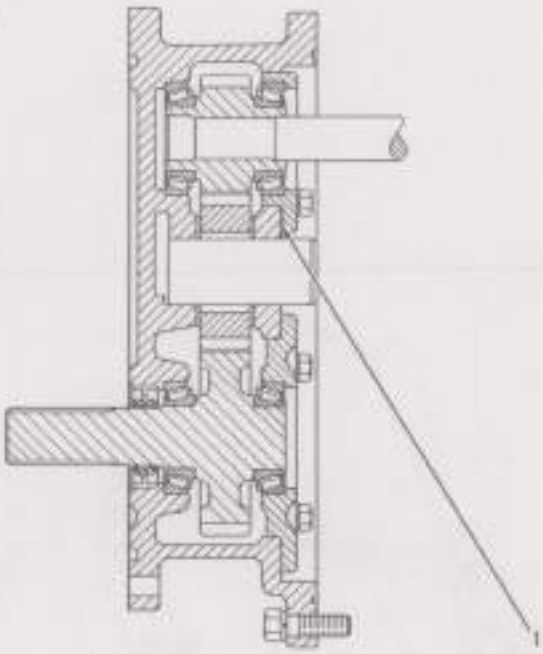

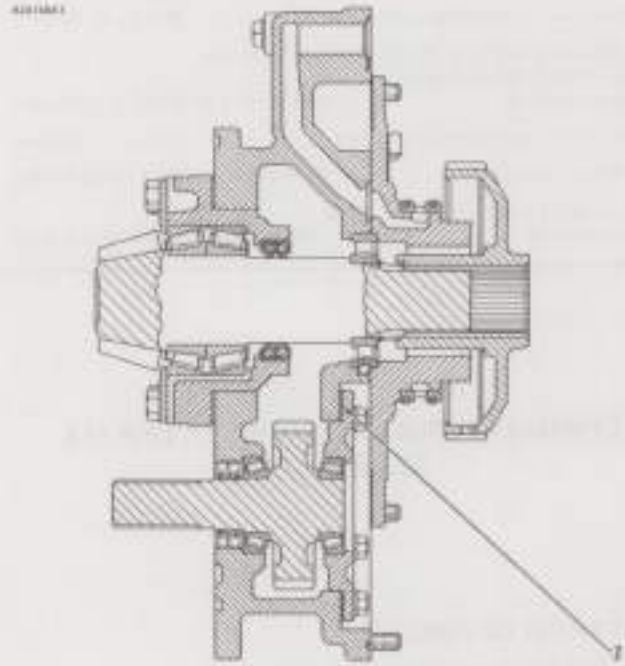

Machines Equipped With 6P3240 Transmission Arrangement (For 54 Winch)

(1) Use shims as necessary to get bearing end play of ..... .002 to .006 in. (0.05 to 0.15 mm)

(2) Use shims as necessary to get bearing end play of ..... .002 to .006 in. (0.05 to 0.15 mm)

NOTE: FOR TORQUE VALUES NOT GIVEN, SEE THE FIRST PAGE OF SPECIFICATIONS FOR GENERAL TIGHTENING TORQUES

TRANSMISSION OIL PUMP
(Power Shift)
(4S8660)

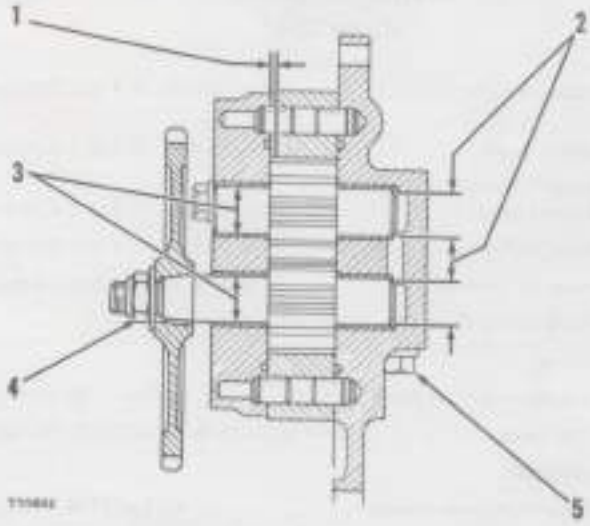

Rotation of gear is clockwise when looking at gear.

For test use SAE 10W oil at 120°F (49°C):

Output ..... 20.4 U.S. gpm (77.2 litre/min)

With pump rotation at ..... 2375 rpm

At a pressure of ..... 310 psi (21.80 kg/cm²)

(1) Clearance between gear and cover ..... .0019 to .0031 in. (0.048 to 0.082 mm)

(2) Diameter of the shafts of drive gear and idler gear ..... .8745 to .8749 in. (22.212 to 22.222 mm)

(3) Bore of bearings of cover and base ..... .8760 to .8766 in. (22.250 to 22.266 mm)

(4) Torque for nut ..... 60 to 80 lb.ft. (8.3 to 11.1 mkg)

(5) Torque for plug ..... 30 to 40 lb.ft. (4.1 to 5.5 mkg)

OIL PUMP FOR FLYWHEEL CLUTCH
(Direct Drive)
(7S7602)

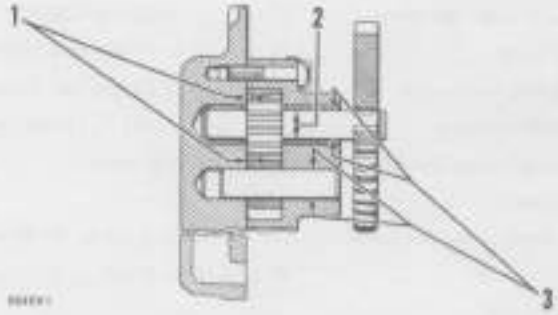

Rotation is counterclockwise when seen from drive end. For test use SAE 10W oil at 120° F (49° C):

Output ..... 8.2 U.S. gpm (31.0 litre/min)

With pump rotation at ..... 2576 rpm

At a pressure of ..... 20 psi (1.4 kg/cm²)

(1) Clearance between gear and cover ..... .0012 to .003 in. (0.03 to 0.08 mm)

(2) Bore of bearings of cover and body ..... .6185 to .6191 in. (15.710 to 15.725 mm)

(3) Diameter of the shafts ..... .6165 to .6171 in. (15.659 to 15.674 mm)

TRANSMISSION FILTER
(Power Shift)
(4S8679)

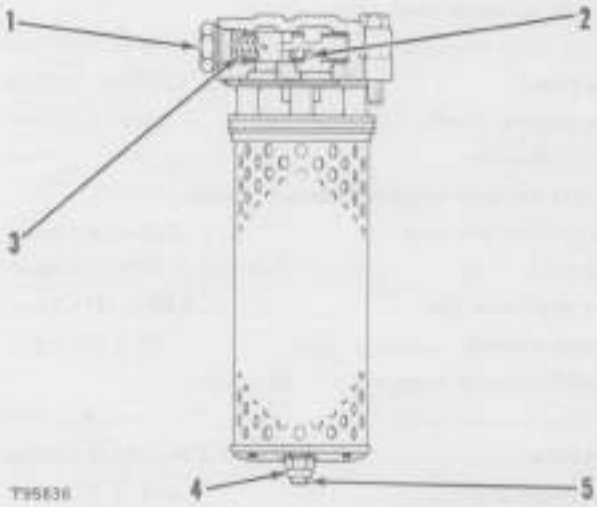

(1) Torque for plug ..... 30 to 40 lb.ft. (4.1 to 5.5 mkg)

(2) Torque for plug ..... 30 to 40 lb.ft. (4.1 to 5.5 mkg)

(3) 2S5818 Spring:

Length under test force ..... 1.35 in. (34.29 mm)

Test force ..... 11.22 to 13.18 lb. (5.09 to 5.98 kg)

Free length after test ..... 1.86 in. (47.24 mm)

Outside diameter ..... .562 in. (14.27 mm)

4M7945 Spring:

Length under test force ..... 2.12 in. (53.85 mm)

Test force ..... 3.14 to 3.68 lb. (1.43 to 1.67 kg)

Free length after test ..... 2.56 in. (65.02 mm)

Outside diameter ..... .68 in. (17.27 mm)

(4) Torque for nut ..... 8 to 12 lb.ft. (1.1 to 1.7 mkg)

(5) Torque for stud ..... 35 to 45 lb.ft. (4.8 to 6.2 mkg)

HYDRAULIC CONTROLS FOR THE TRANSMISSION (Power Shift)

(1) Torque for nuts ..... 32 to 38 lb.ft. (4.4 to 5.3 mkg)

(2) Torque for bolts (6 point head) ..... 32 to 38 lb.ft. (4.4 to 5.3 mkg)

(3) Torque for bolts (12 point head) ..... 19 to 25 lb.ft. (2.6 to 3.5 mkg)

(4) Torque for bolt ..... 19 to 25 lb.ft. (2.6 to 3.5 mkg)

(5) Torque for bolts (seven) ..... 32 to 38 lb.ft. (4.4 to 5.3 mkg)

(6) 754595 Spring (inner) for piston and relief valve:

First test:

Length under test force ..... 5.36 in. (136.1 mm)

Test force ..... 9.94 to 11.46 lb. (4.512 to 5.164 kg)

Second test:

Length under test force ..... 4.11 in. (104.4 mm)

Test force ..... 52.04 to 56.16 lb. (23.616 to 25.480 kg)

Free length after test ..... 5.65 in. (143.5 mm)

Outside diameter ..... .580 in. (14.73 mm)

(7) 783039 Spring for relief valve:

Length under test force ..... 1.031 in. (26.19 mm)

Test force ..... 3.22 to 3.78 lb. (1.459 to 1.711 kg)

Free length after test ..... 1.437 in. (36.50 mm)

Outside diameter ..... .781 in. (19.84 mm)

(8) 754596 Spring (outer) for load piston and relief valve:

First test:

Length under test force ..... 3.19 in. (81.0 mm)

Test force ..... 7.90 to 9.10 lb. (3.585 to 4.126 kg)

Second test:

Length under test force ..... 1.94 in. (49.3 mm)

Test force ..... 45.25 to 48.75 lb. (20.525 to 22.100 kg)

Free length after test ..... 3.45 in. (87.6 mm)

Outside diameter ..... .830 in. (21.08 mm)

(9) 4M2381 Spring for check valve:

Length under test force ..... .48 in. (12.2 mm)

Test force ..... .513 to .521 lb. (.2308 to .2344 kg)

Free length after test ..... .89 in. (22.6 mm)

Outside diameter ..... .30 in. (7.6 mm)

(10) 359949 Spring for safety and differential valve:

Length under test force ..... 2.28 in. (57.9 mm)

Test force ..... 11.9 to 12.9 lb. (5.36 to 5.85 kg)

Free length after test ..... 4.50 in. (114.3 mm)

Outside diameter ..... .59 in. (15.0 mm)

(11) 359950 Spring for safety and differential valve:

Length under test force ..... 1.375 in. (34.92 mm)

Test force ..... 16.9 to 18.3 lb. (7.67 to 8.30 kg)

Free length after test ..... 3.44 in. (87.4 mm)

Outside diameter ..... 1.250 in. (31.75 mm)

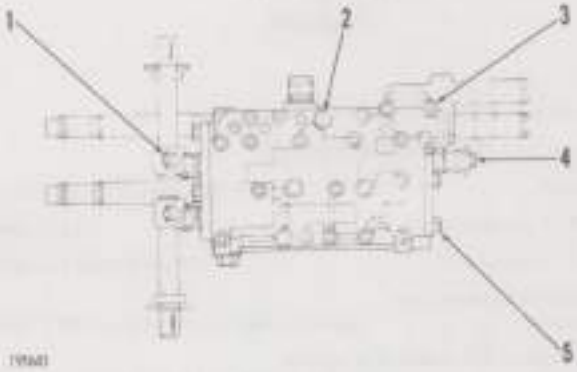

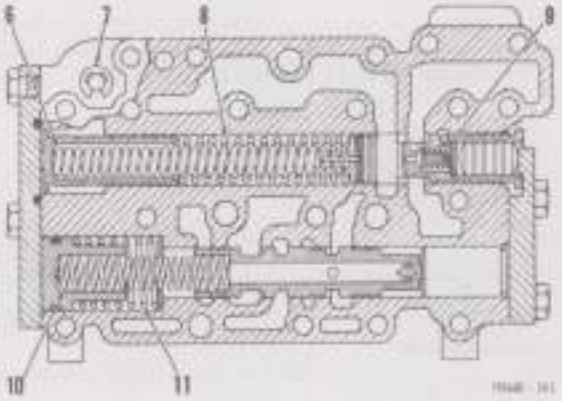

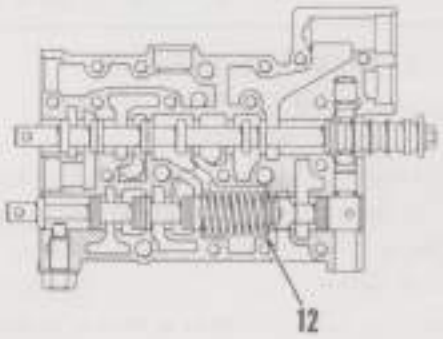

(12) 359936 Spring for inlet valve of converter:

Length under test force ..... 1.62 in. (41.1 mm)

Test force ..... 60.72 to 71.28 lb. (27.560 to 32.340 kg)

Free length after test ..... 3.38 in. (85.8 mm)

Outside diameter ..... 1.18 in. (30.0 mm)

NOTE: Later control valves do not have a 359936 Spring.

NOTE: FOR TORQUE VALUES NOT GIVEN, SEE THE FIRST PAGE OF SPECIFICATIONS FOR GENERAL TIGHTENING TORQUES

BEVEL PINION

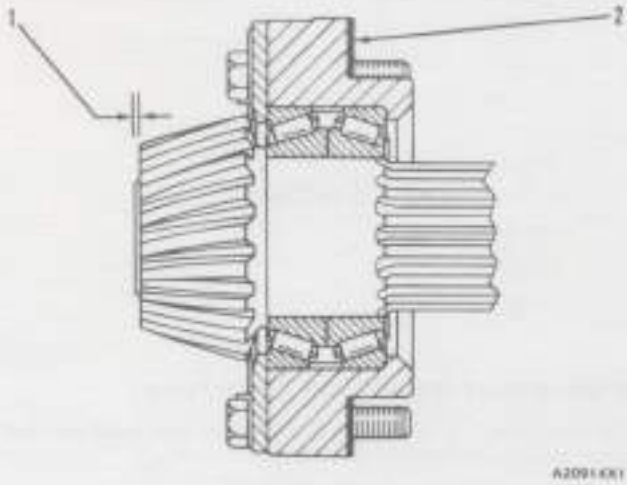

DIRECT DRIVE

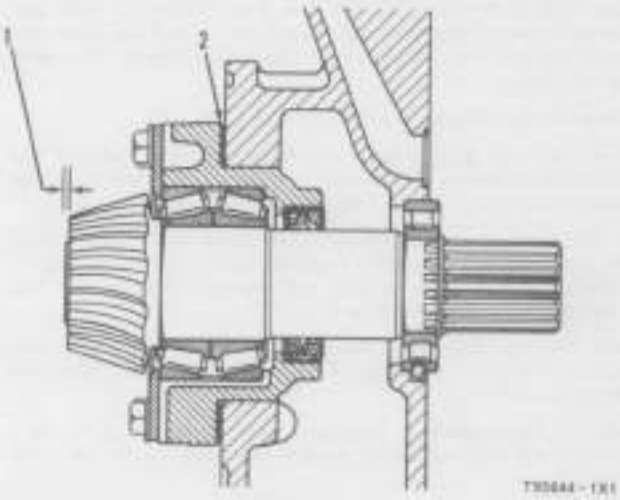

POWER SHIFT

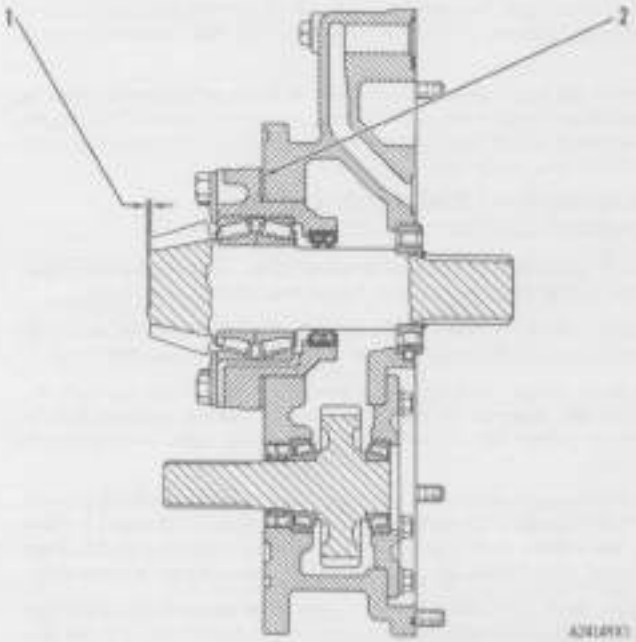

POWER SHIFT (54 WINCH)

(1) Expected movement of shaft forward and back for correct bearing clearance.

Direct drive transmission . . . . .003 to .009 in. (0.08 to 0.23 mm)

Power shift transmission . . . . .001 to .007 in. (0.03 to 0.18 mm)

The movement is of a new bearing assembly.

BEVEL PINION LOCATION

The bevel gear and pinion must be put in correct position for correct tooth contact. The pinion can be moved toward or away from center line of bevel gear and shaft. The shims (2) between the pinion shaft bearing cage and gear case are used to change the position.

If the same pinion shaft is used, use the same shims that were removed. If a new pinion shaft and, or, bevel gear is installed use the correct amount of shims to put the heel ends of pinion shaft and bevel gear in correct position.

The adjusting nuts on each bevel gear shaft bearing cage move the bevel gear toward or away from the pinion. Move either the bevel gear or pinion shaft to change backlash and tooth contact.

BEVEL GEAR SHAFT BEARING PRELOAD

1. Put the bevel gear into position with the approximate free movement (backlash)of .010 in. (0.25 mm). If either the bevel gear or pinion is new, the correct backlash is .005 to .011 in. (0.13 to 0.27 mm).
2. Tighten the four bevel gear shaft bearing cap bolts (3). Then loosen each bolt two turns.
3. Tighten the left bearing cage nut (4) with a BSB303 Spanner Wrench. Turn the bevel gear shaft while tightening. Tighten the nut to a torque of 150 to 200 lb. ft. (20.8 to 27.6 mkg). Loosen the nut. Tighten the nut (4) lightly until there is not any end play in bevel gear shaft. Tighten the nut until there is alignment for the nut lock in the next lock position.
4. Tighten the four bearing cap bolts (3). Now, follow the method for bevel gear and pinion free movement (backlash) adjustment.

C

Bevel Pinion (Cont.)

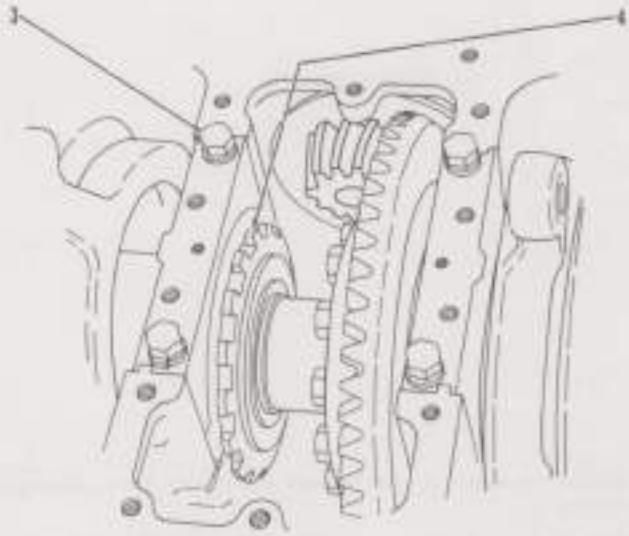

FREE MOVEMENT (BACKLASH) ADJUSTMENT

The amount of free movement (backlash) of each bevel gear and pinion group is .005 to .011 in. (0.13 to 0.27 mm).

1. Put the pinion in a position so it will not turn.
2. Assemble a 7H1942 Dial Indicator, 7H1945 Holding Rod, 7H1948 Snug, 8S2327 Post and 8S2329 Base. Put assembly on bevel gear case with rod of dial indicator against the face of one bevel gear tooth. This is to measure the free movement (backlash) of the bevel gear and pinion.
3. Loosen the four bearing cap bolts (3) two turns each.
4. Move the bevel gear forward and back. Read the high and low measurements shown on the dial indicator. The difference of the two measurements is the amount of free movement (backlash).
5. Do this operation at four different points (90° each) on the bevel gear circumference. The point with less free movement (backlash) is the point at which to read the measurements for the free movement (backlash) adjustment.
6. Make the free movement (backlash) less by loosening the left adjusting nut and tightening the right adjusting nut by the same amount to each.
7. Make the free movement (backlash) more by loosening the right adjusting nut and tightening the left adjusting nut by the same amount to each.

NOTE: Bevel gear shaft bearing preload must not be changed. If one adjusting nut is loosened, the other adjusting nut must be tightened the same amount. To do this, note the number of notches one adjusting nut is loosened. Tighten the other adjusting nut the same number of notches.

8. Install the locks to the adjusting nuts. If the adjusting nut must be turned to install lock, turn in direction of tightening. Tighten the four bearing cap bolts. Check the backlash. Check heel alignment of bevel gear and pinion.

FREE MOVEMENT (BACKLASH) AND ALIGNMENT CHECK

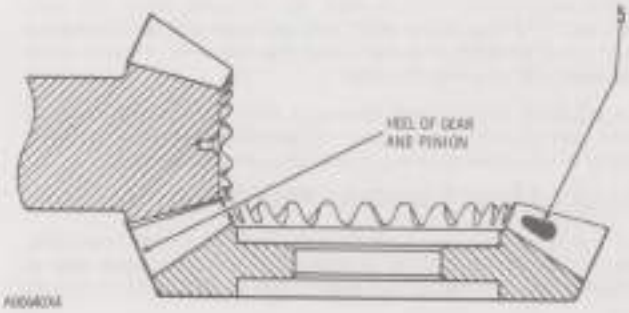

1. Put Prussian blue or red lead on some of the teeth of the bevel gear. Turn pinion through this area. Check the tooth contact area.
2. Correct tooth contact starts at the toe of the tooth and goes approximately 30 percent of the length of a bevel gear tooth (5).
3. If tooth contact is more on one side of a tooth or near the heel of a tooth, the position of the pinion shaft must be changed. Add or remove shims (2) of pinion shaft bearing cage to change the position.
4. If pinion shaft position is changed, then free movement (backlash) adjustment must be made again. Each time an adjustment is made to the pinion shaft location and free movement (backlash), Steps (1) and (2) of Backlash and Alignment Check must be done again.
5. More than one pinion shaft and free movement (backlash) adjustment is possible to get correct tooth contact and correct free movement (backlash).

NOTE: FOR TORQUE VALUES NOT GIVEN, SEE THE FIRST PAGE OF SPECIFICATIONS FOR GENERAL TIGHTENING TORQUES

BEVEL GEAR AND STEERING CLUTCH

Amount of free motion (backlash) between bevel gear and bevel pinion ..... .005 to .011 in. (0.13 to 0.28 mm)

(1) 6B8807 Spring (outer):

Length under test force ..... 3.125 in. (79.38 mm)

Test force ..... 161.5 to 178.5 lb. (73.26 to 80.97 kg)

Free length after test ..... 4.266 in. (108.36 mm)

Outside diameter ..... 1.41 in. (35.81 mm)

(2) 6B8804 Spring (inner):

Length under test force ..... 2.812 in. (71.42 mm)

Test force ..... 123.5 to 136.5 lb. (56.02 to 61.92 kg)

Free length after test ..... 3.266 in. (82.96 mm)

Outside diameter ..... .95 in. (24.13 mm)

(3) Clearance between bearing and shaft ..... .010 to .013 in. (0.25 to 0.33 mm)

Maximum clearance ..... .020 in. (0.51 mm)

Minimum permissible bore of bearing after assembly into plate ..... 2.3675 in. (60.134 mm)

(4) Push drum onto shaft with a force of ..... 15 to 20 ton (13.5 to 18.0 t)

Distance from shoulder of shaft to face of drum is expected (earlier machines) ..... .09 to .15 in. (2.3 to 3.8 mm)

Distance from shoulder of shaft to face of drum is expected (later machines) ..... .24 to .30 in. (6.1 to 7.6 mm)

(5) Torque for nut ..... 200 to 300 lb. ft. (27.7 to 41.5 mkg)

(6) Thickness of 10 new discs and 11 new disc assemblies ..... 2.787 to 3.092 in. (70.79 to 78.54 mm)

Minimum permissible thickness of 10 worn discs and 11 worn disc assemblies ..... 2.63 in. (66.80 mm)

Thickness of one new 3F5504 Disc Assembly ..... .177 to .192 in. (4.50 to 4.88 mm)

Thickness of one new 2H6836 Disc ..... .084 to .098 in. (2.13 to 2.49 mm)

(7) Torque for nut ..... 200 to 300 lb. ft. (27.7 to 41.5 mkg)

(8) Diameter of journal of shaft ..... 2.361 to 2.363 in. (59.97 to 60.02 mm)

(9) Torque for 11 S1588 Bolts (5/8 in. diameter) ..... 200 to 240 lb. ft. (27.6 to 33.1 mkg)

Torque for one 2K337 Self-Locking Nut (3/4 in. diameter) ..... 265 ± 35 lb. ft. (36.6 ± 4.8 mkg)

Torque for nuts (with eight bolts and 2K4821 Locknuts) ..... 175 to 195 lb. ft. (24.2 to 27.0 mkg)

Torque for nuts (with eight bolts and nuts and sheet metal locks) ..... 130 to 170 lb. ft. (17.9 to 23.5 mkg)

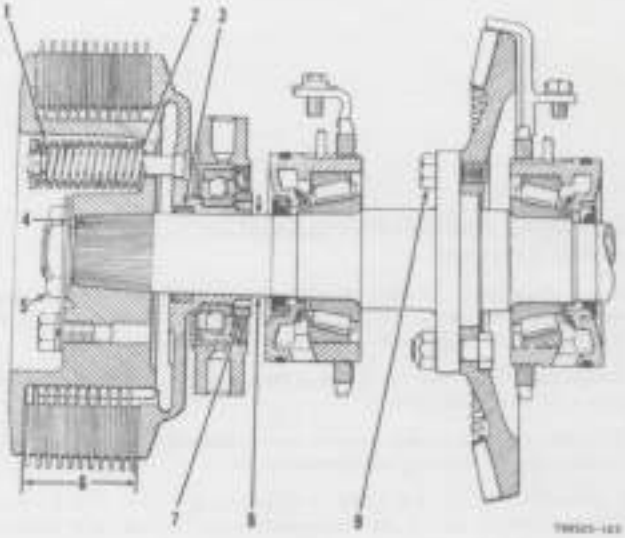

CONTROLS FOR THE STEERING CLUTCH

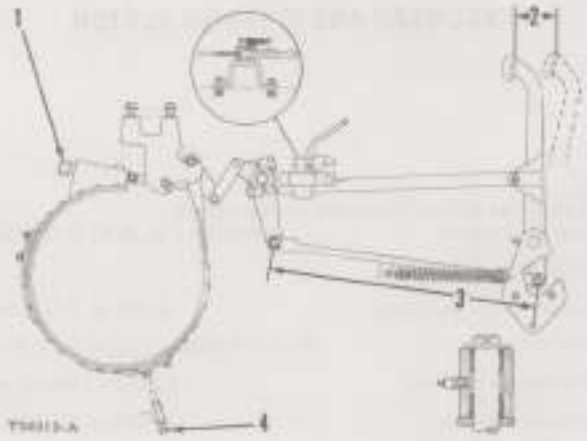

ADJUSTMENT OF BRAKES

1. Adjust rod for correct dimension (3), 20.00 to 20.06 in. (508.0 to 510.0 mm).
2. With brake pedal released, tighten adjusting nut (1) until brake band is against circumference of steering clutch drum. Do not make tight.
3. Turn screw (4) until it is against the brake band. Do not make it tight against brake band. Then, loosen screw one turn. Hold screw and tighten locknut.
4. Loosen adjusting nut (1) approximately three turns or until brake pedal has a free travel (2) of approximately 3.0 in. (76.2 mm).

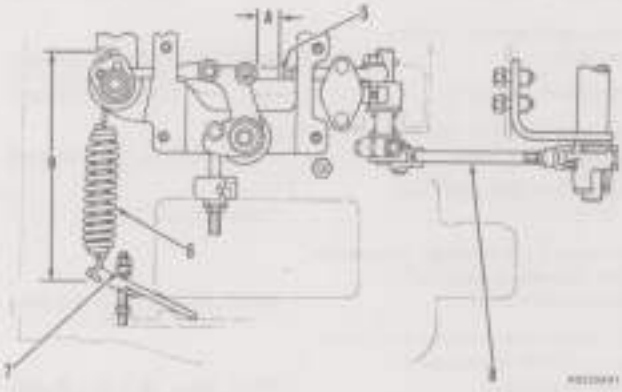

ADJUSTMENT FOR STEERING CLUTCH CONTROL LEVERS

1. Check movement of the steering clutch control lever. If the movement is not from 2.50 to 3.50 in. (63.5 to 88.9 mm), adjust the steering clutch controls.
2. Adjust rod (8) so that the distance between the centers of the end pins is 14.30 in. (363.2 mm).
3. With the steering clutch control lever released (clutch engaged), measure length of spring (6); dimension (B).
4. If dimension (B) is not 10.68 to 10.80 in. (271.3 to 274.3 mm), adjust length of spring (6) by loosening the locknut and turning adjusting nut (7).
5. When dimension (B) has been adjusted make the free play adjustment (A) .90 to .98 in. (22.9 to 24.9 mm) between the bellcrank and the head of the bolt (5). Loosen locknut on bolt (5), turn bolt (5) as needed then tighten the locknut.

CASE AND COVER FOR STEERING CLUTCH

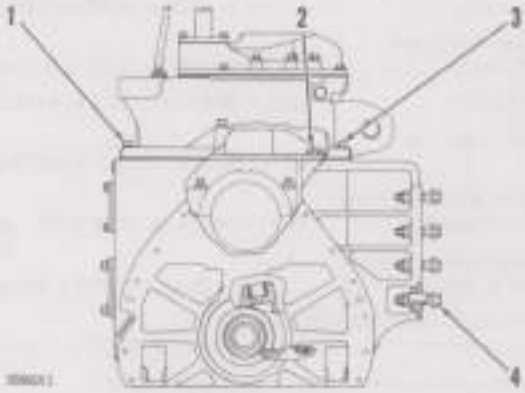

(1) Torque for bolts (top cover to case) ..... 75 to 95 lb. ft. (10.4 to 13.1 mkg)

(2) Torque for bolts (bevel gear cover) ..... 75 to 95 lb. ft. (10.4 to 13.1 mkg)

(3) Torque for bolts ..... 75 to 95 lb. ft. (10.4 to 13.1 mkg)

(4) Torque for bolts (with lubricant on threads and washer) ..... 360 to 440 lb. ft. (49.8 to 60.9 mkg)

NOTE: FOR TORQUE VALUES NOT GIVEN, SEE THE FIRST PAGE OF SPECIFICATIONS FOR GENERAL TIGHTENING TORQUES

FINAL DRIVE

(1) Torque for nut ..... 260 to 340 lb. ft. (36.0 to 47.0 mkg)

Torque for bolt (one or two) in nut lock ..... 160 to 200 lb. ft. (22.1 to 27.7 mkg)

(2) Torque for bolts ..... 37 to 47 lb. ft. (5.1 to 6.5 mkg)

(3) Distance between face of flange and shoulder of pinion ..... .09 to .15 in. (2.3 to 3.8 mm)

This distance to be measured after flange is pushed onto pinion with force of ..... 15 to 20 ton (13.6 to 18.1 t)

(4) Torque for bolts ..... 75 to 95 lb. ft. (10.4 to 13.1 mkg)

(5) Distance between face of sprocket to shoulder of splines ..... .06 to .18 in. (1.5 to 4.6 mm)

This distance to be measured after sprocket is pushed onto hub with force of ..... 20 to 25 ton (18.1 to 22.7 t)

(6) Torque for nut ..... 300 to 400 lb. ft. (41.5 to 55.3 mkg)

(7) Tighten nuts to ..... 60 ± 5 lb. ft. (8.3 ± 0.7 mkg)

Then tighten nut an added ..... 120° ± 5°

(8) Torque for nut [after shaft has been installed to distance shown in (10)] ..... 500 to 600 lb. ft. (69.2 to 83.0 mkg)

(9) Torque for bolts ..... 90 to 110 lb. ft. (12.4 to 15.2 mkg)

Make certain that the face at the front and the rear ends of this plate is not more than .004 in. (0.10 mm) from the face of the steering clutch case.

(10) Distance for installing shaft (from face of holder to line of separation of steering clutch case and final drive cover):

D4D Tractors ..... 9.500 ± .062 in. (241.30 ± 1.57 mm)

D4D LGP Tractors ..... 14.500 ± .062 in. (368.30 ± 1.57 mm)

This distance to be measured after installing shaft into steering clutch case (with keyway on top).

Tighten nut (8) to correct torque after shaft is installed.

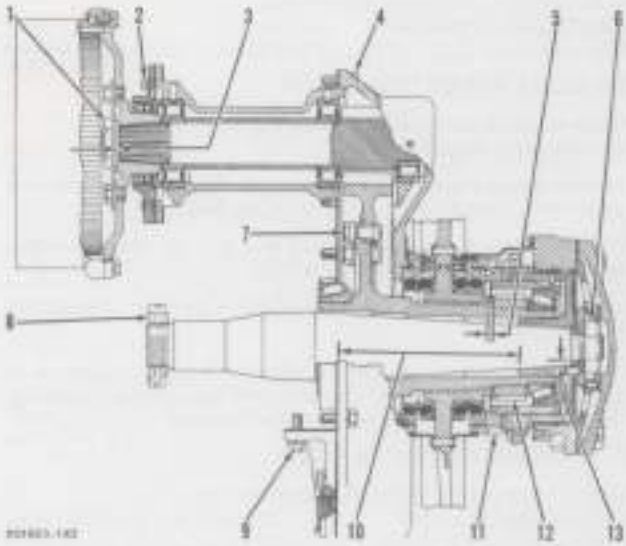

(11) Torque for nut plus additional turn to the next lock position ..... 900 to 1200 lb. ft. (124.5 to 166.0 mkg)

(12) Torque for nut ..... 300 to 400 lb. ft. (41.5 to 55.3 mkg)

(13) Maximum permissible amount the shaft can be bent ..... .125 in. (3.2 mm)

Measure at four places (every 90°) with shaft installed in machine.

ADJUSTMENT OF FINAL DRIVE SPROCKET BEARINGS

Put a 4 to 5 ft. (1.2 to 1.5 m) long bar between the sprocket and roller frame. Put side force at front and back of sprocket to test for loose sprocket hub bearings. The machine should be on smooth ground with no objects under the track that would put force against sprocket.

If bearing adjustment is needed, complete the following steps:

1. Remove dirt guard (1). Remove lock (2). Loosen clamp bolt (7).
2. Remove cap (5) and lock (4). Check retainer nut (3) for tightness. Loosen adjusting nut (6) one or two turns by turning it in a clockwise direction. Tighten the retainer nut (3) to a torque of 300 to 400 lb. ft. (41.5 to 55.3 mkg).
3. Tighten adjusting nut (6) to a torque of 900 to 1200 lb. ft. (124.47 to 165.96 mkg) by turning it in a counterclockwise direction with the correct spanner wrench.
4. Install lock (4) and cap (5). Install lock (2). Tighten clamp bolt (7) and install dirt guard (1).

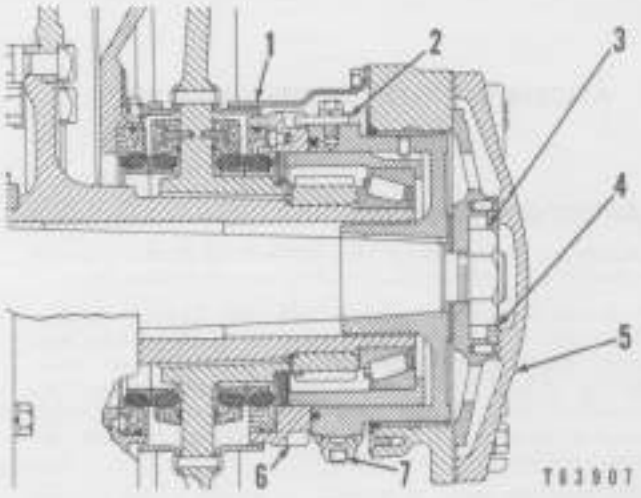

TRACK ROLLER FRAME

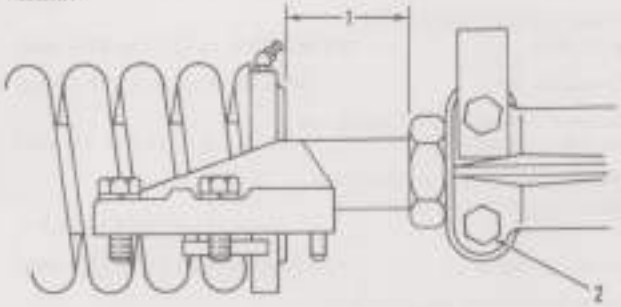

Torque for bolts in cap of roller frame brace. This cap is located on the inner end of sprocket shaft ..... 177 to 213 lb. ft. (24.5 to 29.5 mkg)

MECHANICAL ADJUSTED TRACK

(1) Maximum permissible length of adjustment (for mechanical adjusted track) ..... 6.7 in. (170.2 mm)

1. Loosen the two clamp nuts (2). Turn adjustment rod to loosen or tighten track. Check for correct track curve (sag).
2. Move the machine forward and back several times. This can change track tension. Check the track curve (sag).
3. Do Steps 1 and 2 again if needed, until curve is correct. Tighten the two clamp nuts (2).

CAUTION: Do not make adjustment of track if track adjuster is at maximum permissible length. At this time, the track pins and bushings are to be turned, or new track link assemblies installed.

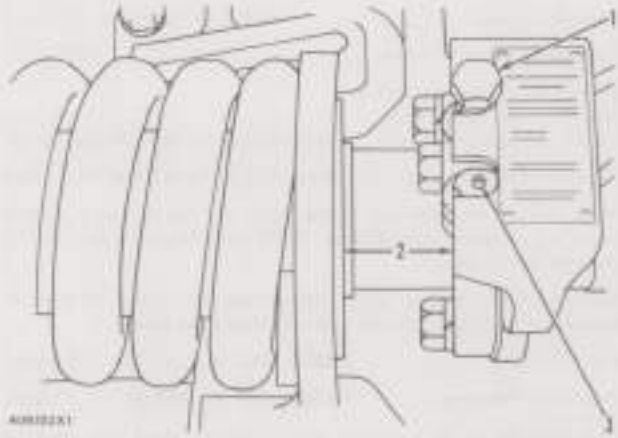

HYDRAULIC ADJUSTED TRACK

(2) Maximum permissible length of adjustment (for hydraulic adjusted tracks) ..... 5.1 in. (130.0 mm)

Torque for valves (1) and (3) ..... 20 to 30 lb. ft. (2.8 to 4.1 mkg)

1. Adjustment of track tension. Install grease to fill valve (3) until track curve (sag) is correct.
2. Move the machine forward and back several times. This can change track tension. Check the track curve (sag).
3. Do Steps 1 and 2 again if needed, until curve is correct.
4. If necessary to release pressure of adjuster, loosen relief valve (1) one turn to remove pressure. When track curve (sag) is approximately correct, tighten relief valve (1). Check track.

CAUTION: Do not make adjustment of track if track adjuster is at maximum permissible length. At this time, the track pins and bushings are to be turned, or new track link assemblies installed.

ALIGNMENT OF TRACK ROLLER FRAME

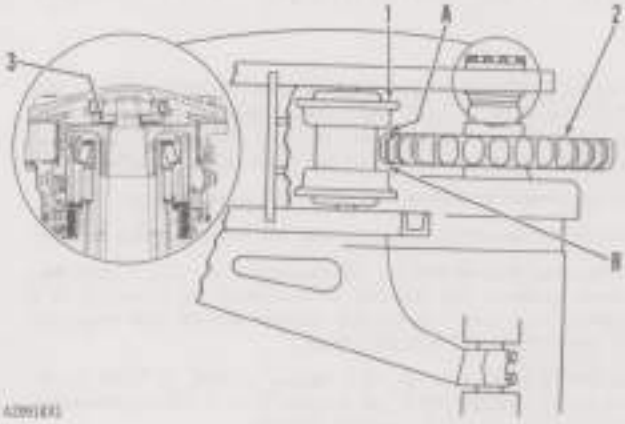

ALIGNMENT OF SPROCKET

1. The location of the sprocket (2) is to be in the center of the rear track roller (1). Distance (A) is to be the same as distance (B).
2. The change in location of the rear track roller (1) to the sprocket (2) is made by installing or removing shims (3) of final drive support. Install shims (3) between retainer assembly and holder assembly of final drive to move the roller frame out to make distance (A) more. Remove shims (3) between retainer assembly and holder assembly of final drive to move the roller frame to make distance (A) less.
3. Install or remove shims (3) in final drive support so that center of sprocket (2) is not more than .06 in. (1.5 mm) from center of rear track roller (1).

NOTE: FOR TORQUE VALUES NOT GIVEN, SEE THE FIRST PAGE OF SPECIFICATIONS FOR GENERAL TIGHTENING TORQUES

EQUALIZER SPRING

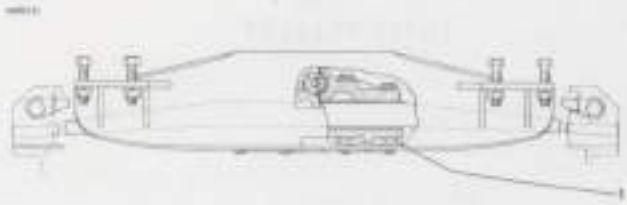

(1) Torque for 8 nuts ..... 150 ± 20 lb. ft. (20.7 ± 2.8 mkg)

Then tighten again to a torque of ..... 290 ± 25 lb. ft. (40.1 ± 3.5 mkg)

ADJUSTMENT OF THE TRACK

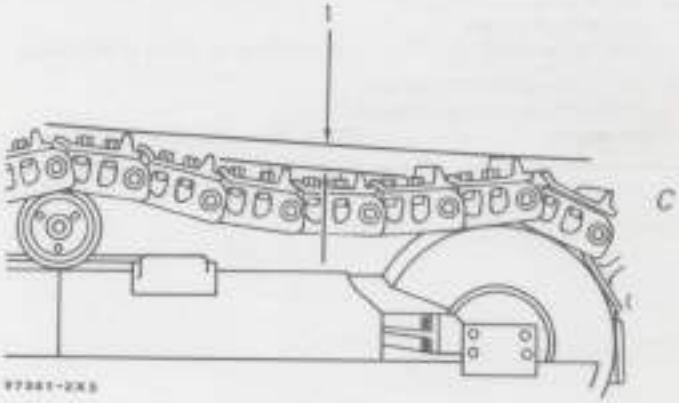

(1) The adjustment of the track is correct when the measurement of the curve in the track (sag) halfway between the front carrier roller and the front idler is ..... 1.5 to 2.0 in. (38.1 to 50.8 mm)

WARNING: Never visually inspect the vent holes or valves to see if grease or oil is coming out of them. Make sure the vent holes are clean before releasing the tension on the track.

(2) Torque for valves ..... 20 to 30 lb. ft. (2.8 to 4.1 mkg)

(3) Distance between center of track pins (pitch) ..... 6.73 to 6.74 in. (170.9 to 171.2 mm)

Maximum permissible distance between center of track pins before turning pins and bushings ..... 6.860 in. (174.2 mm)

(4) Maximum permissible distance when measured across four links ..... 27.40 to 27.44 in. (696.0 to 697.0 mm)

(5) Torque for bolts (9/16-18) with lubricant on threads and washer ..... 50 to 80 lb. ft. (6.9 to 11.1 mkg)

Then, turn the bolt an added ..... 120°

Torque for bolts (5/8-18) with lubricant on threads and washer ..... 150 to 210 lb. ft. (20.7 to 29.1 mkg)

Then, turn the bolt an added ..... 120°

NOTE: Install nut with radii on corner against link.

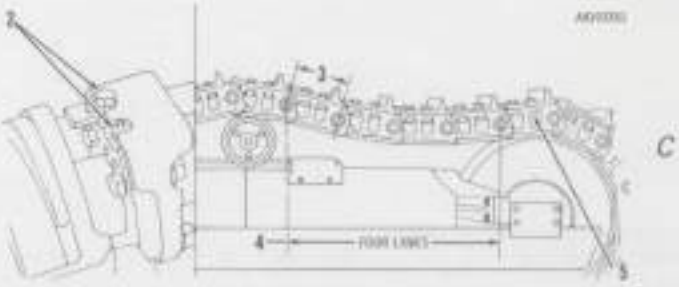

TRACK ROLLERS

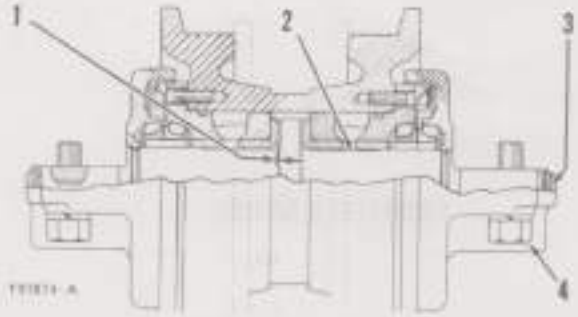

1M4213 DOUBLE FLANGE
1M4218 SINGLE FLANGE

(1) End clearance ..... .011 to .029 in. (0.28 to 0.74 mm)

Maximum permissible end clearance ..... .050 in. (1.27 mm)

(2) Diameter of shaft ..... 2.122 to 2.124 in. (53.90 to 53.95 mm)

Clearance between shaft and bearing ..... .014 to .018 in. (0.36 to 0.46 mm)

Maximum permissible bearing clearance ..... .040 in. (1.02 mm)

Maximum permissible bend in shaft ..... .005 in. (0.13 mm)

(3) Torque for lubrication plug ..... 110 to 140 lb. ft. (15.2 to 19.3 mkg)

(4) Torque for bolt in 1M4213 and 1M4218 Rollers (with lockwasher) ..... 130 to 170 lb. ft. (17.9 to 23.5 mkg)

(4) Torque for bolt in 7K8096 and 7K8095 Rollers (with hardened flat washer) ..... 205 to 245 lb. ft. (28.4 to 33.9 mkg)

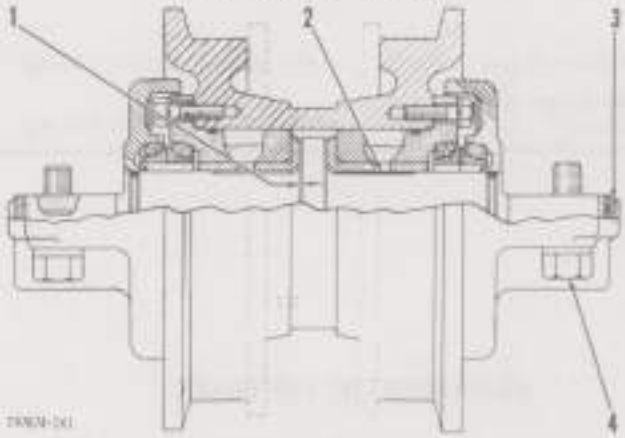

7K8096 DOUBLE FLANGE
7K8095 SINGLE FLANGE

TRACK CARRIER ROLLER

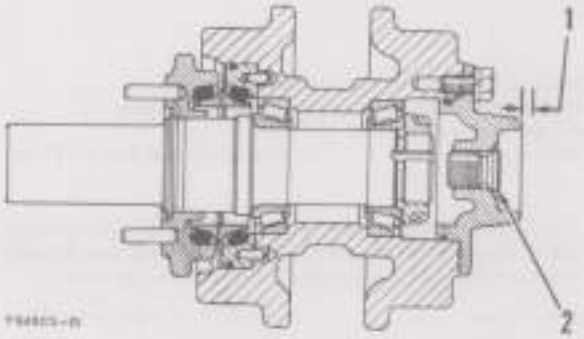

3K7962 ROLLER

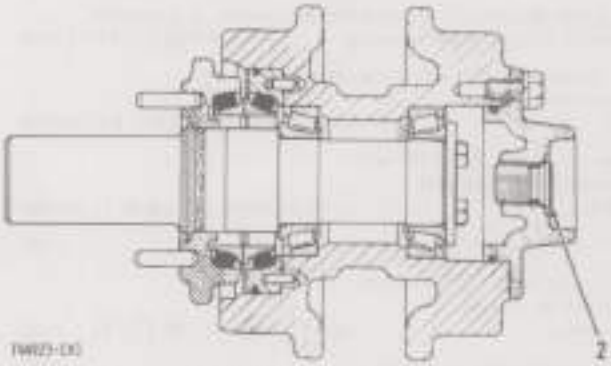

6K8879 ROLLER

Torque for bolts that hold roller bracket to machine ..... 95 to 125 lb. ft. (13.1 to 17.3 mkg)

NOTE: Put lubricant on washers and threads of bolts before installing.

(1) Bearing end clearance (3K7962 Roller only) ..... .000 to .0045 in. (0.0 to 0.114 mm)

Maximum permissible end clearance ..... .030 in. (0.762 mm)

(2) Torque for plug ..... 125 ± 15 lb. ft. (17.3 ± 2.0 mkg)

NOTE: FOR TORQUE VALUES NOT GIVEN, SEE THE FIRST PAGE OF SPECIFICATIONS FOR GENERAL TIGHTENING TORQUES

FRONT IDLER AND RECOIL SPRING

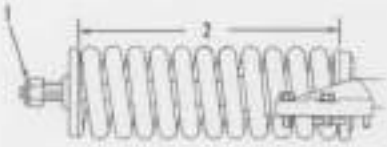

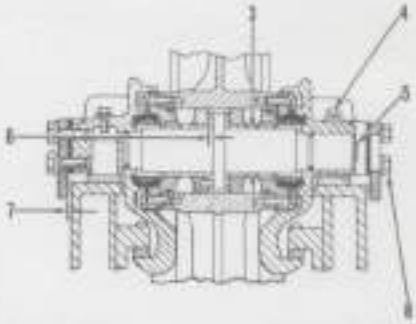

(1) Tighten the bolt against washer. Turn large nut backward until it is against the washer and tighten.

Do this after the recoil spring is in the correct position and against the stops at each end.

(2) SK2754 Recoil Spring:

Assembled length for installation ..... 18.25 in. (473.5 mm)

Free length ..... 24.06 ± .38 in. (611.12 ± 9.65 mm)

Force after installation ..... 6.82 ± .55 ton (6.14 ± .50 t)

(3) Diameter of shaft ..... 2.122 to 2.124 in. (53.90 to 53.95 mm)

Maximum permissible clearance between shaft and bearing ..... .040 in. (1.02 mm)

(4) Torque the lockpin bolt ..... 40 lb. ft. (5.5 mkg)

Then hit lockpin with hammer and again tighten bolt to ..... 40 to 60 lb. ft. (5.5 to 8.3 mkg)

(5) Torque for plug ..... 110 to 140 lb. ft. (15.2 to 19.3 mkg)

(6) End clearance between idler and shaft ..... .010 to .030 in. (0.25 to 0.76 mm)

Maximum permissible end clearance ..... .050 in. (1.27 mm)

Maximum permissible bend in shaft ..... .005 in. (0.13 mm)

(7) Clearance between plate and roller frame (on each side of idler) ..... .06 in. (1.5 mm)

(8) Torque for bolts on both sides (use flat washers) ..... 90 ± 10 lb. ft. (12.4 ± 1.4 mkg)

NOTE: The oil hole in the shaft (same end as plug) is to be on top when assembled.

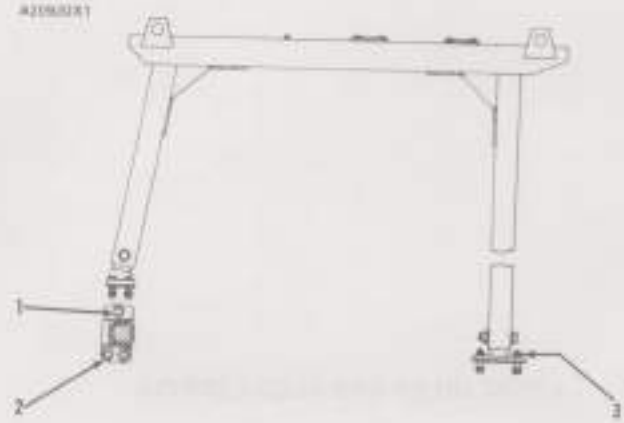

ROLLOVER PROTECTIVE STRUCTURE (ROPS)

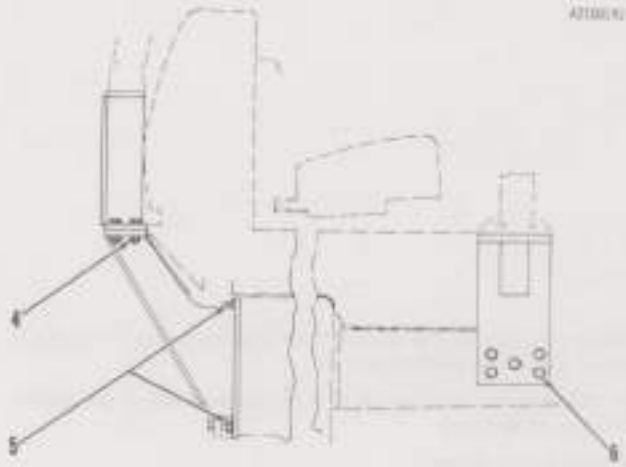

(1)	Torque for nuts	500 ± 70 lb. ft. (69.2 ± 9.7 mkg)
(2)	Torque for nuts	400 ± 50 lb. ft. (55.3 ± 6.9 mkg)
(3)	Torque for nuts	400 ± 50 lb. ft. (55.3 ± 6.9 mkg)
(4)	Torque for nuts (3 each side)	400 ± 35 lb. ft. (55.3 ± 4.8 mkg)
(5)	Torque for studs (4 each side)	200 ± 20 lb. ft. (27.7 ± 2.8 mkg)
	Torque for nuts (4 each side)	500 ± 50 lb. ft. (69.2 ± 6.9 mkg)
(6)	Torque for bolts	325 ± 25 lb. ft. (45.0 ± 3.5 mkg)
(7)	Torque for studs (4 each side)	90 ± 10 lb. ft. (12.4 ± 1.4 mkg)
	Torque for nuts (4 each side)	500 ± 50 lb. ft. (69.2 ± 6.9 mkg)
(8)	Torque for nuts (3 each side)	400 ± 35 lb. ft. (55.3 ± 4.8 mkg)
(9)	Torque for nuts (5 each side)	250 ± 25 lb. ft. (34.6 ± 3.5 mkg)
(10)	Torque for nuts (3 each side)	400 ± 50 lb. ft. (55.3 ± 6.9 mkg)

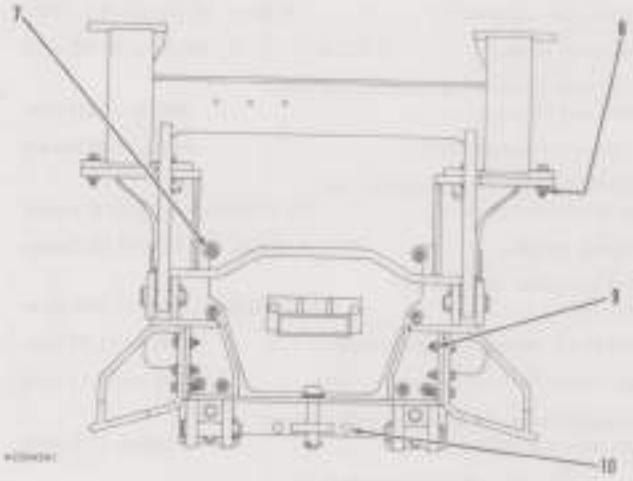

WITH RIPPER

NOTE: FOR TORQUE VALUES NOT GIVEN, SEE THE FIRST PAGE OF SPECIFICATIONS FOR GENERAL TIGHTENING TORQUES

Printed in U.S.A.