The

DAVID BROWN
25 & 30C

OPERATING & MAINTENANCE INSTRUCTIONS

SERIES

VAK / IC-25 and VAG / IC-25

VAK / ID-30C and VAG / ID-30C

DAVID BROWN TRACTORS LIMITED

DAVID BROWN

25 and 30C

AGRICULTURAL TRACTOR

Operating and
Maintenance Instructions

SERIES
VAK/1C-25 and VAG/1C-25
VAK/1D-30C and VAG/1D-30C

DAVID BROWN INDUSTRIES LIMITED
MELTHAM · HUDDERSFIELD

Pub. No. DBT 334-1

D 5705

Introduction

This Instruction Book deals entirely with the operating, maintenance and minor service adjustments of the DAVID BROWN " 25 " or " 30C " six-speed agricultural wheeled tractor and is intended to serve as a guide to the routine care and maintenance which will enable owners and operators to realise the full benefits of their David Brown Tractor over many years.

Although this instruction book may not be read in its entirety in the first instance it is strongly emphasised that the particular **items detailed in Bold Type in the Contents Section,** page 3, receive your immediate attention before putting the Tractor to work.

At all times the Service Department at Meltham or any authorised DAVID BROWN Dealer will be pleased to deal with any operational, mechanical or technical queries and you are invited to take full advantage of the David Brown Dealer Organisation and After Sales Service.

In all communications with the factory Service or Spares Departments you are asked to quote in full the tractor and engine serial numbers which are found on the metal identity plate attached to the dash panel.

Contents

The David Brown
25 and 30C

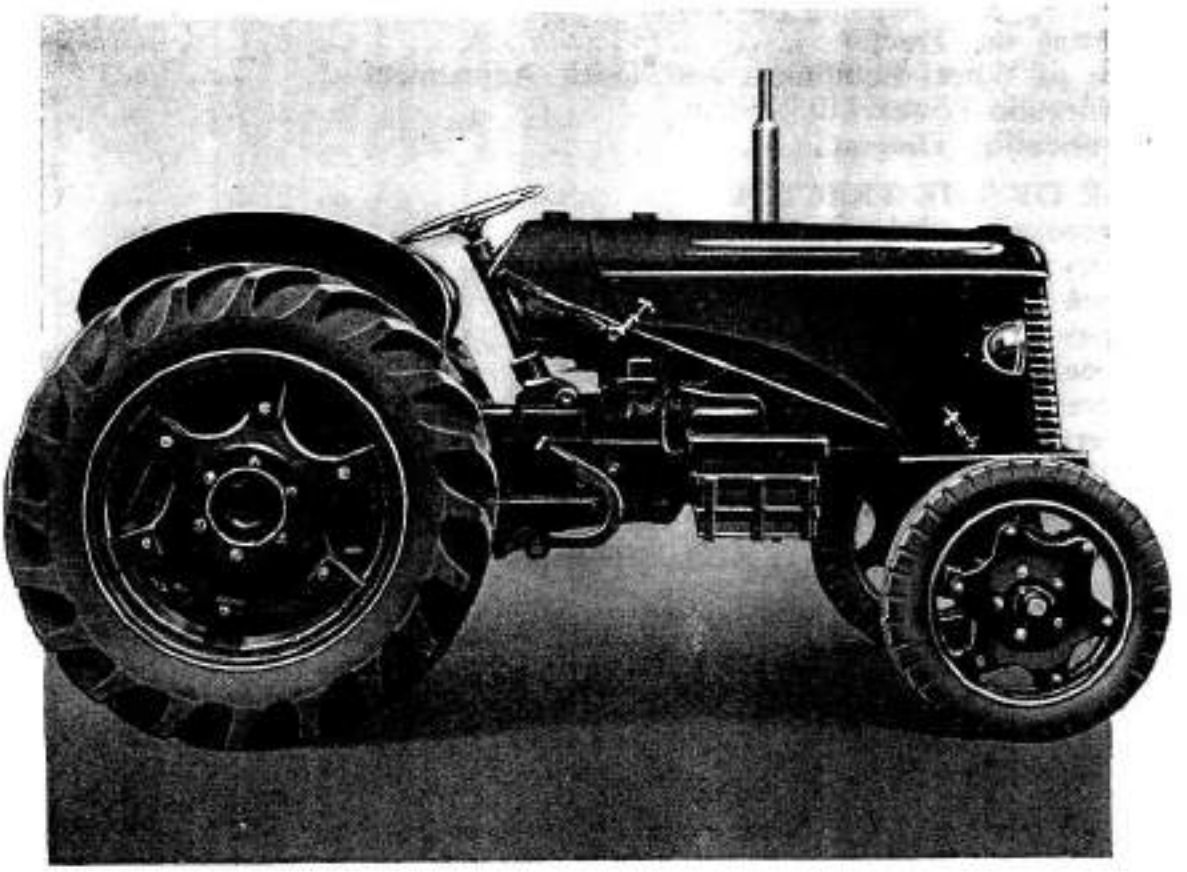

AGRICULTURAL TRACTOR

Series
VAK/1D-30C and VAG/1D-30C
VAK/1C-25 and VAG/1C-25

DAVID BROWN INDUSTRIES LIMITED

Receiving the Tractor

Before starting the tractor, and having made yourself familiar with its controls, etc., it is important to carry out the following procedure.

EXAMINATION—Examine the tractor to ascertain if any damage has occurred in transit, and check the equipment. Report any damage or shortages to your David Brown dealer immediately.

TRACTOR EQUIPMENT—All Tractors are supplied with six speed gear boxes, adjustable pan seats, built in hydraulic power lift, extra two speed P.T.O. unit and drawbar. The Tractor may be powered by a Kerosene or Petrol engine having coil ignition.

Additional or alternative equipment fitted to standard tractors is listed in the specification supplement on pages 49 and 54.

NOTE.—Later series tractors may be fitted with alternative steering column mounted hand throttle control. A pointer is provided to indicate the intermediate speed position.

LUBRICATION—Refer to the lubrication chart on page 21 (and to page 22), locate all the greasing points, make sure that all nipples are free from dirt and lubricate with the grease gun.

Check the oil levels in the engine, transmission, air cleaner, reductions, power take-off ; check all drain plugs for tightness.

COOLING SYSTEM—Close the cylinder block drain tap (see E, Fig. 14) and the tap (E, Fig. 15) at the bottom of the left-hand side of the radiator, and fill the cooling system with clean, soft water. Capacity 4 gallons.

BRAKES, THROTTLE CONTROL, CLUTCH—Inspect the linkages of these three controls for correct actions.

TYRES—Examine the tyres, and if necessary, inflate to the correct pressures (see page 23). N.B.—Individual tyre manufacturers may recommend lower maximum tyre pressures.

ELECTRICAL SYSTEM—Check the operation of the lights and the self starter motor ; test the latter with the clutch pedal depressed.

FUEL SYSTEM—Turn the fuel tap (which is referred to on page 7 and in Fig. 3) to the petrol position and fill the rear tank with petrol and the front one with vaporizing oil. Main tank capacity 10 gallons, starting tank, 1½ gallons.

NOTE.—Always ensure that the carburetter drain tap is turned OFF, with the handle vertical, before filling the fuel tanks or opening the fuel cock.

Special Precautions with a New Tractor

After the First 25 Hours' Operation

Retighten all the engine bolts, paying particular attention to the cylinder head bolts and the inlet and exhaust manifold nuts. To tighten the cylinder head nuts, remove the valve cover and refer to the tightening sequence shown on page 34, Fig. 23.

Drain and flush out the engine sump A, Fig. 11, and after fitting a new oil filter element, refill with 12 pints of the recommended grade of lubricant.

After the First 50 Hours' Operation

Drain and flush out, with good quality flushing oil, the transmission and final drive units. With the tractor on level ground, refill the transmission with 3½ gallons of the recommended lubricant and the final drives with 2 pints each of the recommended grade of lubricant.

For list of the recommended lubricants, see page 22.

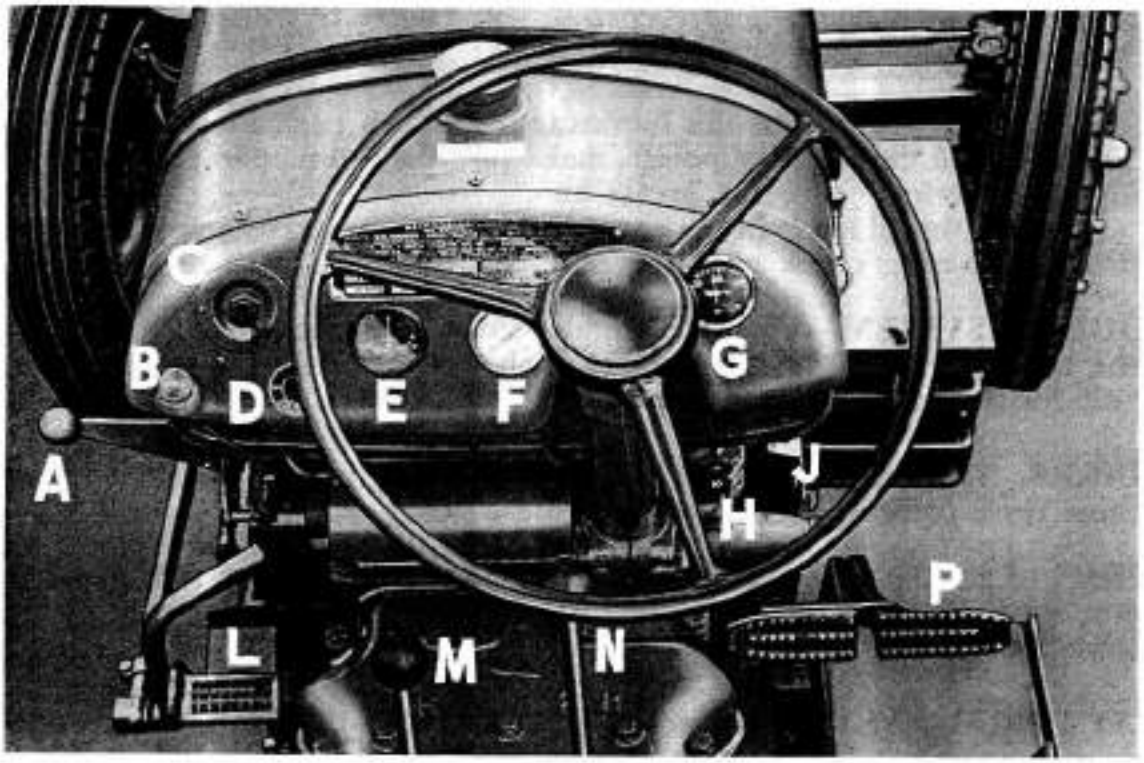

FIG. 1
INSTRUMENT PANEL

A. Governor Control Lever
B. Choke Control
C. Lighting Switch
D. Ignition Switch
E. Ammeter
F. Oil Pressure Gauge
G. Temperature Gauge
H. Starter Control
J. Radiator Blind Control
K. Petrol Tank Filler
L. Clutch Pedal
M. Auxiliary Gear Lever
N. Main Gear Lever
P. Independent Foot Pedals

Operating the Tractor

Driver's Controls and Instruments

CHOKE CONTROL (B, Fig. 1)

Pull outwards to start when cold, but press in immediately the engine is running.

CARBURETTER PRE-HEATER REGULATOR (G, Fig. 28 and Fig. 29)

This is an adjustable sleeve fitted above the air cleaner on the air intake pipe to control the amount of cold air drawn into the carburetter. For adjustment, see "Starting and Stopping the Engine."

IGNITION SWITCH (D, Fig. 1)

This is of the rotary type. The ignition is switched *on* when the flats are vertical.

ELECTRIC STARTER CONTROL (H, Fig. 1)

Situated at the right-hand side of the steering column. Pull smartly to start and release immediately the engine fires.

AMMETER (E, Fig. 1)

The needle when on the "charge" side of the dial indicates the output of the dynamo, varying according to the number of lamps switched on and the condition of the batteries.

OIL-PRESSURE GAUGE (F, Fig. 1)

All models are fitted with a dial type oil pressure gauge, normal pressure should read 30-40 lb./sq. ins. at working engine speed and temperature. The engine should not be run without oil pressure.

TEMPERATURE GAUGE (G, Fig. 1)

The gauge is calibrated in degrees Fahrenheit (°F). The normal operating temperature is 180°F. to 200°F. and the changeover temperature 120°F. for kerosene fuels.

FUEL CHANGE-OVER TAP (A, Fig. 3)

The vaporizing oil and petrol positions are shown in Fig. 3. Below the tap is a sediment bowl and filter to trap dirt and water.

GOVERNOR CONTROL LEVER (A, Fig. 1)

Control Lever is situated on the left-hand side of the fuel tank support and controls the engine speed throughout its entire range. The engine is designed to operate at a maxumim speed of 2,000 r.p.m. (2,300 r.p.m. for 30C tractors.) A steering column control may be fitted to later series tractors.

For convenience, an intermediate stop is provided to control the engine speed at 1,600 r.p.m. To move the lever past the stop, i.e., to increase the engine speed, press it towards the left and lift upwards.

LAMP SWITCH (C, Fig. 1)

This is a push/pull type switch, when pulled out to the first position the side and rear lights are on, when in the second position the headlamps are on. Push in to switch OFF.

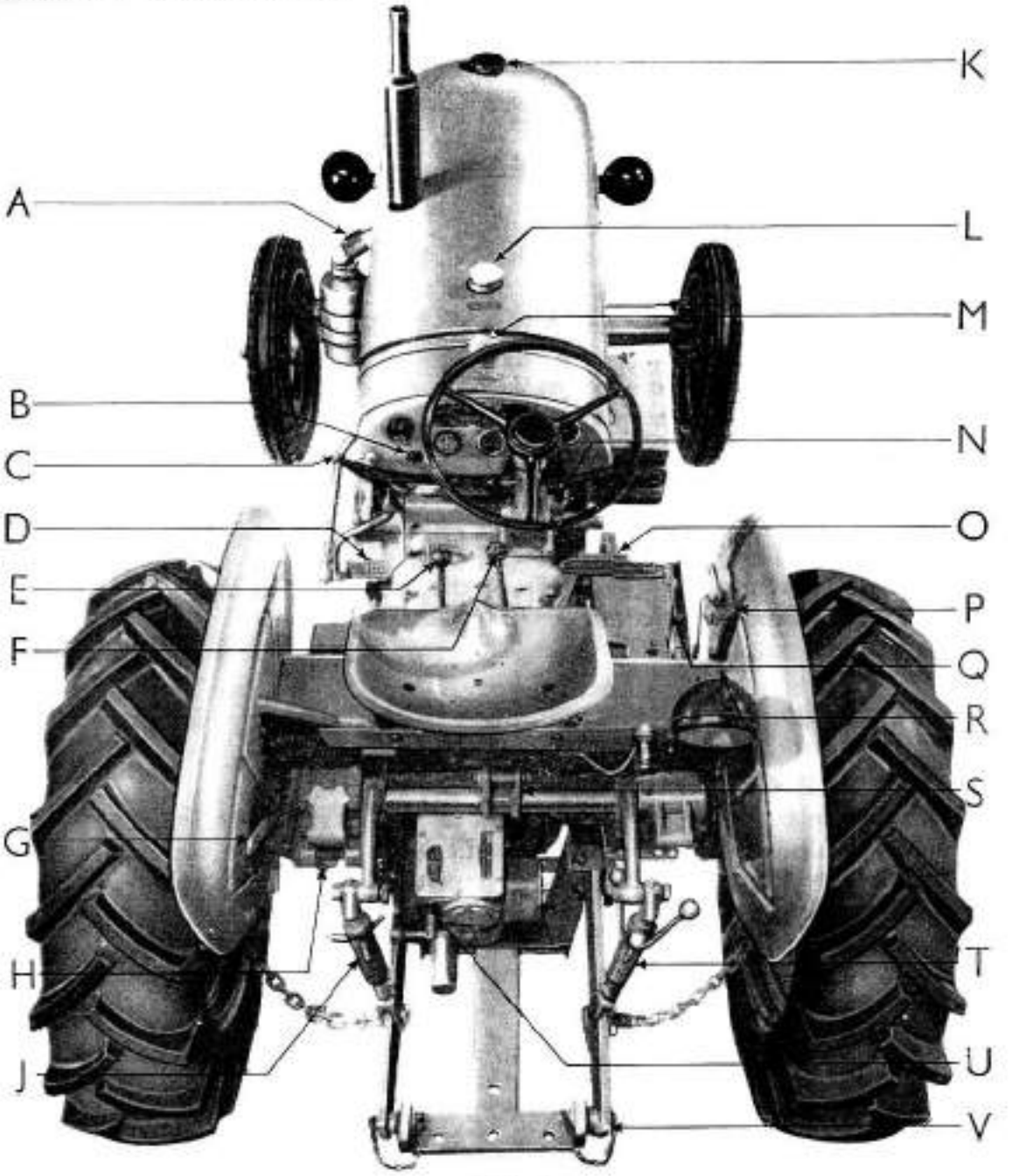

FIG. 2
TRACTOR CONTROLS
(Drawbar extended)

A. Pre-heater Regulator
B. Ignition Switch
C. Governor Control
D. Clutch Pedal
E. H/L range Gear Lever
F. Main Gear Lever
G. Hand Clutch Lever
H. L/H Lift Lock Bolt
J. L/H Levelling Lever
K. Radiator Filler Cap
L. Fuel Filler (Kerosene)
M. Fuel Filler (Petrol)
N. Starter Switch
O. Independent Brake Pedals
P. Power Lift Control
Q. Brake Lock Lever
R. Floodlamp Switch
S. Top Link Attachment
T. R/H Levelling Lever
U. P.T.O. Control
V. Extended Drawbar

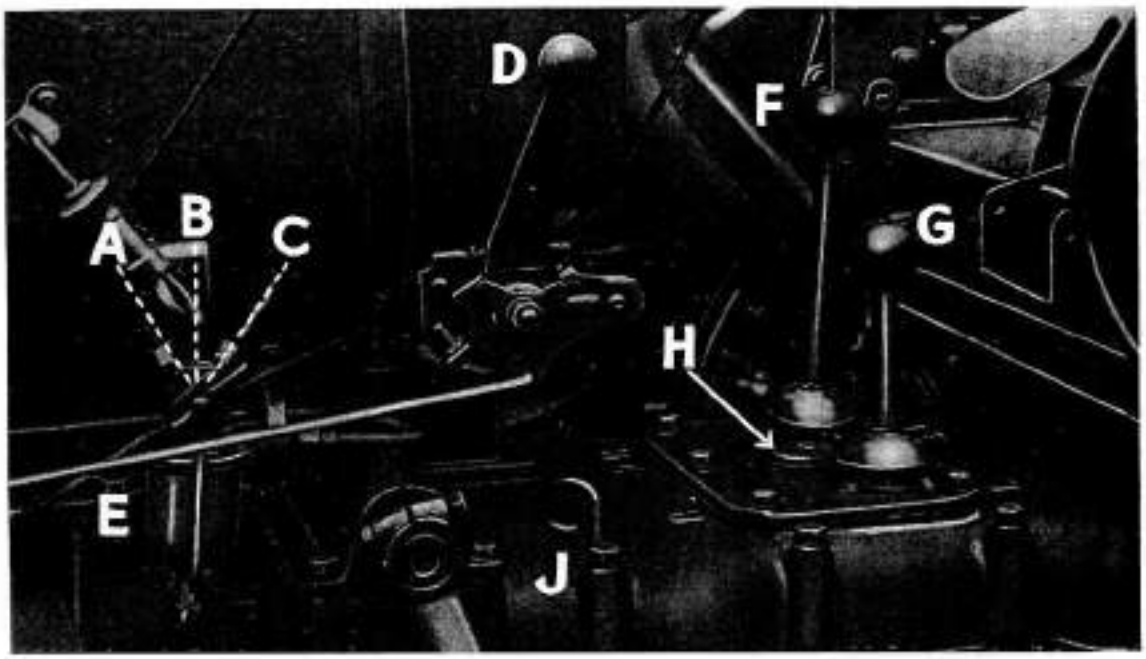

FIG. 3
FUEL TAP AND TRANSMISSION

A. Tap open (kerosene)
B. Tap closed
C. Tap open (petrol)
*D. Governor Control Lever
E. Sediment Bowl
F. Gear Change Lever
G. High/Low Range Lever
H. Transmission Filler Plug
J. Oil Level Dipstick

**NOTE.—The governor control lever is mounted on steering column for later series tractors.*

ISOLATING SWITCH (D, Fig. 5)

This is located on the right-hand mudguard. The switch has two positions only and controls the tail lamp and rear flood lamp.

RADIATOR BLIND CONTROL (J, Fig. 1)

The grip is attached to a cable which controls the blind, and four positions are provided on the bracket attached to the fuel tank. The blind is fully closed when the grip is in the rearmost position and should be adjusted to maintain the correct working temperature.

STEERING FOOT BRAKE PEDALS (P, Fig. 1)

Mounted side by side at the right of the tractor and used independently for making short turns at headlands. When applied each pedal operates on the corresponding rear wheel brake. The steering brakes are used as road brakes when the locking bar (E, Fig. 4) is engaged.

On later series Tractors a lever (Q, Fig. 2) is provided which protrudes through the foot plate. The lever should be moved forwards for locking the brakes and to the rear to release, after depressing the pedal slightly.

CLUTCH PEDAL (H, Fig. 6)

Mounted at the left side of the tractor the clutch pedal (H, Fig. 6) is conveniently positioned for left foot operation. When depressed the clutch pedal disengages the drive to the wheels and P.T.O. unit.

HAND CLUTCH LEVER (J, Fig. 5)

The hand clutch lever is used in conjunction with the automatic overload release mechanism and is also used when hitching implements.

POWER TAKE-OFF UNIT (U.5.E) (B, Fig. 8)

The two speed power take-off shaft is controlled by a lever G, Fig. 7. The lever has three positions, the central position being neutral. To engage first speed the lever is turned vertical ($\frac{1}{4}$ turn anti-clockwise) and pushed *in* then placed horizontal. To engage second speed the lever is again turned vertical and pulled to the rear then locked by a $\frac{1}{4}$ turn to the left.

PULLEY UNIT

A conversion kit U5F will convert the two-speed P.T.O. to a combined two speed P.T.O. and belt pulley unit as the U5D.

GEAR LEVERS

Gear positions are as shown. The main gearbox lever has 3 forward and 1 reverse gear positions, namely 2 — R
3 — 1

AUXILIARY GEAR LEVER

The "H" (High) and "L" (Low) positions of the left-hand lever are indicated. (Fig. 3.)

NOTE.—The auxiliary gear lever has no neutral position.

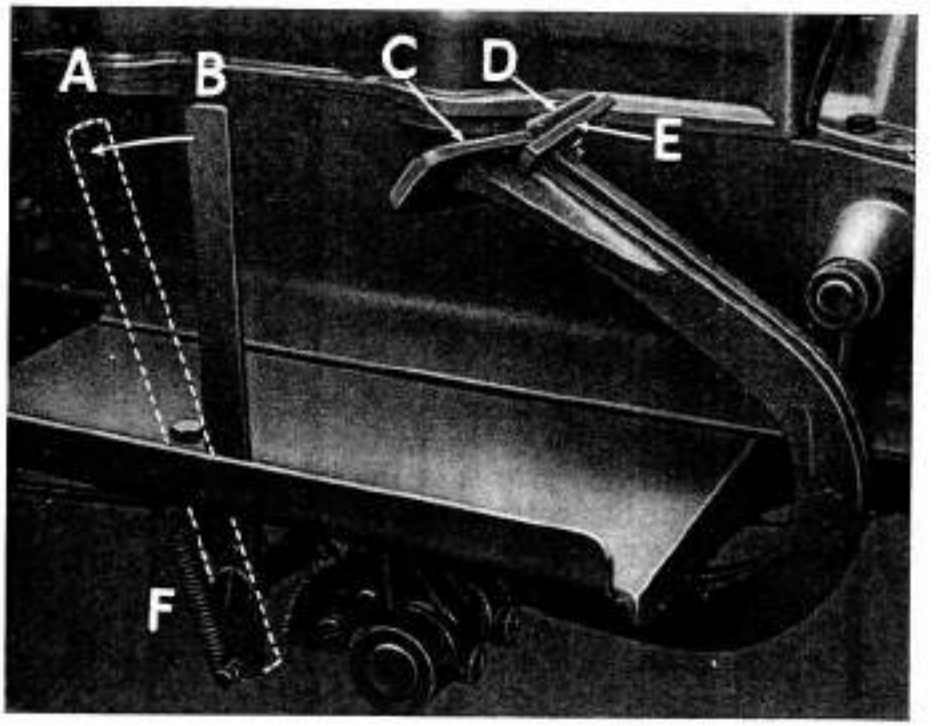

FIG. 4
STEERING BRAKE PEDALS

*A. Brake Lock Lever (off)
B. Brake Lock Engaged
C. Right Steering Brake
D. Left Steering Brake
E. Locking Bar (engaged)
F. Brake Lock Pawl

**NOTE.—See hand brake fitting, page 56.*

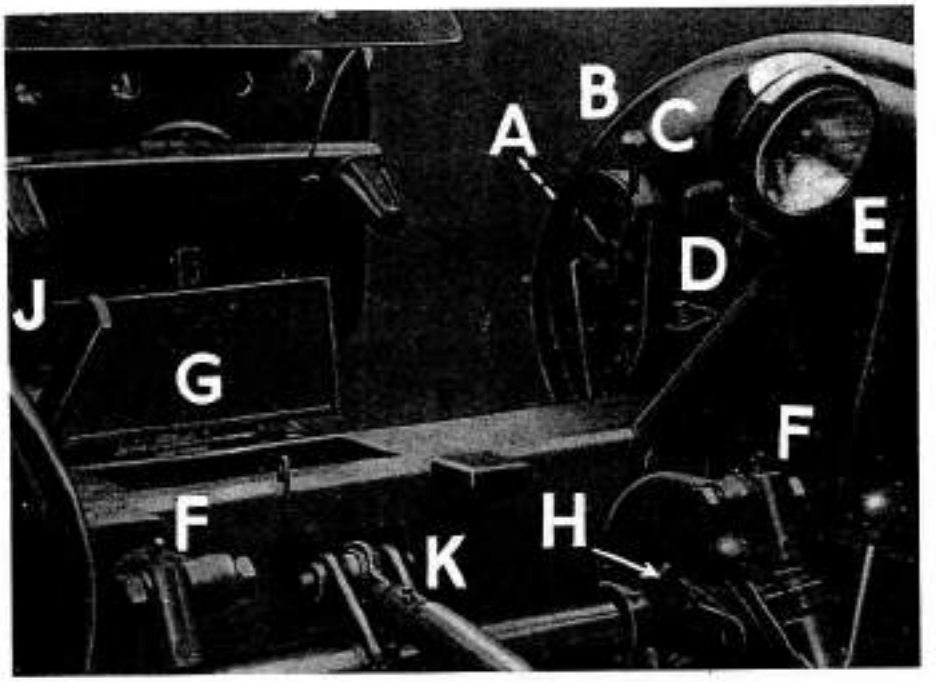

FIG. 5
POWER LIFT CONTROL

A. Lift Position
B. Holding Position
C. Lower Position
D. Isolating Switch
E. Rear Floodlamp
F. Lubricators for Levelling Levers.
G. Tool Box
H. Ramshaft Lubricator
J. Hand Clutch Lever
K. Top Link Lubricator

POWER LIFT CONTROL (A, B and C, Fig. 5)

Two sliding bolts are provided (Fig. 7) ; the L/H bolt locks the lift in the raised position, whilst the R/H bolt limits its fall and should only be used with implements taking their depth control from the tractor.

Caution : This bolt must not be engaged with the hole in the lift arm.

The power lift is operated as follows :—

To Lift

1. Move the Control Lever to the highest position A, Fig. 5. The control lever is spring loaded and when released automatically returns to the holding position B, Fig. 5.

To Hold

2. When the load is fully raised allow the control lever to return to the holding position at the notch B, Fig. 5.

To Lower

3. Press the control lever outwards from the notch and move the lever to position C, Fig. 5. The rate of lowering can be controlled by regulating the movement of the control lever.

It is not advisable to use the left hand lift lock bolt when operating the Mark II series power lift in the holding position.

Starting and Stopping the Engine

OPERATION OF THE VAPORIZING OIL ENGINE

When cold the engine *MUST* always be started on *PETROL ;* failure to do so will result in undue engine cylinder wear, avoidable lubrication oil dilution and extreme difficulty in starting.

It is not advisable to use the starter motor in exceptionally cold weather conditions, to start up a cold engine. If the starter motor is used, always depress the clutch pedal and at all times " free " a cold engine by turning it several times with the starting handle.

SPECIAL NOTE—Avoid constantly varying the throttle control until the engine is hot, as this will cause incomplete vaporization of the fuel, resulting in irregular running and excessive crankcase dilution.

STARTING FROM COLD

1. Put the gear lever in neutral.
2. Close the radiator blind.
3. Close the choke by pulling the control outwards and close the pre-heater regulator.
4. Move the engine hand control lever upwards about a quarter-inch.
5. Turn fuel tap to petrol position.
6. *Drain carburetter float chamber* (if not already full of petrol) from the tap (G, Fig. 14) and allow fuel to run until pipes have been flushed with petrol.
7. Close carburetter drain tap and allow float chamber to refill with *petrol.*
8. Engage starting handle with crankshaft dog and pull upwards three or four times.
9. Switch on.
10. Push the choke control in half way.
11. Grip the starting handle, with the thumb and fingers below the grip, and pull upwards smartly, or operate the starter motor switch, until the engine fires.
12. Push the choke control in fully.
13. Check the engine oil pressure.
14. Regulate the governor hand control lever until the engine is running fairly fast.
15. Change over to vaporizing oil a few minutes after the engine fires and keep it running steadily and fairly fast for ten minutes and then put the tractor to work,
16. Adjust the pre-heater sleeve according to the atmospheric temperature. The correct position will be found by experience, although normally when the tractor engine has reached its working temperature 175°F. the sleeve may be opened. See Fig. 29, page 50.
17. Adjust the radiator blind to maintain the correct working temperature.

Always open the choke immediately the engine fires.

ENGINES OPERATING ON PETROL ONLY

Exactly the same starting from cold procedure is required when operating engines on petrol only, except that items 6, 7, 15 and 16 are omitted.

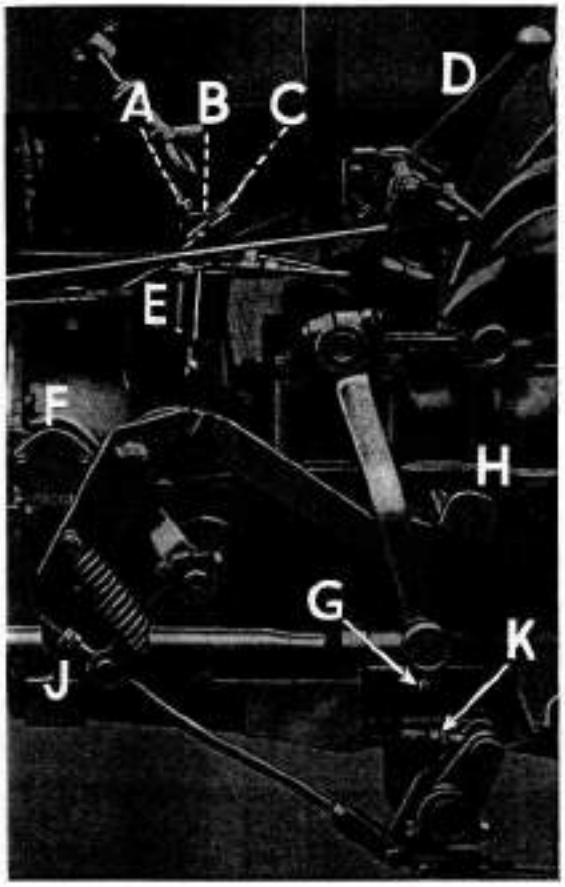

FIG. 6

CLUTCH PEDAL AND LINKAGE

A. Main Tank On
B. Fuel Tap Closed
C. Rear Tank On
D. Governor Control Lever
E. Sediment Bowl
F. Timing Inspection Cover
G. Drop Arm Lubricator
H. Clutch Pedal
J. Clutch Pedal Adjusting Nuts
K. Left Side Brake Rod Adjusting Nuts

RESTARTING WHEN WARM

If the engine is reasonably warm (having been stopped for only five or ten minutes) it will restart on vaporizing oil. The radiator blind should be closed to " warm up " quickly.

STOPPING THE ENGINE

If it is known that the engine is to be stopped long enough for it to cool down, turn over to petrol six or seven minutes before stopping to make sure that the carburetter and fuel pipes contain *petrol only*. If this precaution is not taken, it will be necessary to " flush " the fuel system with petrol (referred to in items 5, 6 and 7 under " Starting the Engine ").

CAUTIONS

Don't attempt to start a cold engine with any vaporizing oil in the pipes or carburetter.

Don't leave the engine running with the choke out for one second longer than is necessary.

Don't use any oils other than those recommended. Unsuitable lubricants may cause rapid wear, impair performance and make starting difficult.

Never use the steering brakes for the purpose of stopping the tractor.

Always ensure that the sliding bolts are disengaged before operating the power lift.

PRECAUTIONS IN FROSTY WEATHER

It is essential to keep the engine as warm as possible. Aids in this connection are :—

A dry garage free from draughts.
To cover the entire bonnet and radiator with a blanket at night or when standing during the day.
The use of a heating lamp of the type suitable for placing under the bonnet.
Draining the cooling system.
Always maintain the battery in a fully charged condition.

ANTI-FREEZE SOLUTIONS

The use of anti-freeze solutions will obviate the necessity for draining. but *it is most important to use a thoroughly reliable brand and to follow the makers' instructions with the greatest care.* The use of an unsatisfactory solution, or failure to use a good solution carefully, can easily result in a choked radiator block for which there may be no cure except a new block. When using anti-freeze, affix a label to the radiator cap to guard against draining and loss of anti-freeze solution.

Driving the Tractor

The David Brown tractor is easy to drive, but like everything else it can be done well or badly. Bad driving increases wear-and-tear and repair bills and does not save any working time.

Maxims of good driving are :—

Avoid sudden acceleration or braking.
Avoid violent changes in engine speeds.
Apply the least possible force to the controls.
Use the controls at just the right moment.

STARTING FROM REST

Assuming the engine to be running, the gear lever will be in neutral and the clutch and brakes engaged. Do not choose too high a gear in which to start—the engine will probably take it, but wear in the clutch is increased.

When engaging the gear, depress the clutch pedal and hold it down long enough to ensure that the gearbox primary shaft has come to rest before moving the gear lever. It may happen once in ten times that the engaging teeth are " end on " and will not mesh ; in this case momentarily release the clutch pedal and again depress before moving the gear into mesh.

Before allowing the clutch pedal to return, release the foot brake by lightly depressing the pedal and releasing the catch. If starting up-hill, release the footbrake and the clutch pedal together so that the engine commences to take up the drive while the brakes are being released.

CLUTCH PEDAL

When starting from rest, do not run the engine faster than is necessary.

Except when the clutch is actually being used, keep the foot off the pedal.

Do not slip the clutch when the engine is labouring in the hope that the tractor will keep going ; in such circumstances select a lower gear.

Do not run the engine with the clutch pedal depressed longer than is absolutely necessary. Do not, for example, run downhill with the clutch disengaged.

When using electric starting in cold weather declutching will reduce the load on the battery.

GEARS

Experience is the best guide to the choice of gears for any particular requirement, but if the engine is labouring select a lower gear. The engine is labouring if its speed is appreciably pulled down by the load, and it audibly protests.

The gearbox is of the sliding-gear type, *and gear changing while the tractor is in motion must be undertaken only by an experienced driver.* If a lower or higher gear is required, the tractor should be brought to a standstill before it is selected. Gear changing while the tractor is under load *must not be undertaken.*

The gear positions for the 6-speed gearbox H — 2 — R
L — 3 — 1

Operation of the 6-speed gearbox is similar to the 4-speed type. First determine whether a high or low speed is required and, with the clutch pedal depressed, place the left-hand lever in the " H " (high) or " L " (low) position. Then, with the clutch pedal still depressed, select the required gear by moving the right-hand lever. The lever for selecting High and Low gears has no neutral position.

Gear changing by the inexperienced while the tractor is in motion may result in serious and costly damage to the gearbox pinions. This may also occur if force is necessary to engage the gears, due to incorrect clutch adjustment. (*See clutch adjustment, page* 37.)

STEERING

Do not pull the steering wheel round when the tractor is stationary. This causes high stresses for which the steering mechanism is not designed. When turning the tractor round in a confined space, or negotiating an awkward corner, it is always possible to move the tractor gently forwards or backwards and to pull the steering wheel round progressively as the tractor moves.

STOPPING THE TRACTOR

At the moment before coming to rest and while the foot brake is still in action, depress the clutch pedal, move the gear lever into neutral and apply the foot brake lock lever and secure the brakes in the " on " position.

The clutch pedal may then be released. As an additional precaution put the gear lever into bottom gear particularly if it is necessary to stop on a slope. Return the lever to neutral position before restarting the engine.

On tractors fitted with 6-speed gearboxes, the right-hand lever must be moved into neutral. The left-hand lever has no neutral position.

Stop on level ground to refill with oil, fuel or water, so that the dipsticks may read correctly.

WHEEL EQUIPMENT

The wheel equipment for use with the David Brown Tractor covers all that is required in steels and pneumatics, and a wide range of adjustment is available.

RETRACTABLE DRAWBAR

The drawbar is mounted to permanent brackets bolted to the rear axle casing. For mounting the drawbar in the extended position the two short links are used which are normally stowed below the driver's seat. These are fixed to the standard hitch points and to the extended drawbar. With the power lift locked in the raised position the right and left side levelling levers are each extended about 4" and fixed to the drawbar links. When the drawbar is not in use the short links are stowed and the longer lower links fitted after retracting the " T " drawbar. Alternative drawbars are referred to on page 55.

TRACK ADJUSTMENT

Adjustments to wheel widths are necessary for most field work, particularly ploughing and row crop cultivations. These are obtained by utilising the dished centre plate and the offset lugs on the wheel rims as required ; all that is necessary is a jack and two spanners. The centre plate is cut away between the fixing bolts to enable the lugs in the wheels to be passed behind the centre plate.

Special attention is drawn to the changing over of pneumatic tyres to ensure correct direction of rotation. When it is necesasry to reverse the wheels to obtain a particular track setting they should be transferred to opposite sides of the tractor. Correct rotation should be checked by referring to the arrow moulded into the side wall of the tyre.

BALLAST

Wheel slip is expensive, not only because of wear but also because it wastes fuel. To reduce wheel slip to a minimum the operator should first select the type of wheel best suited to the conditions and then consider the use of ballast in the form of wheel weights and, in the case of pneumatic equipment, water-filling of the tyres. If water ballasting is required it is advisable to consult an Authorized David Brown Dealer, who will have the necessary equipment for this job.

WHEEL SETTING CHART

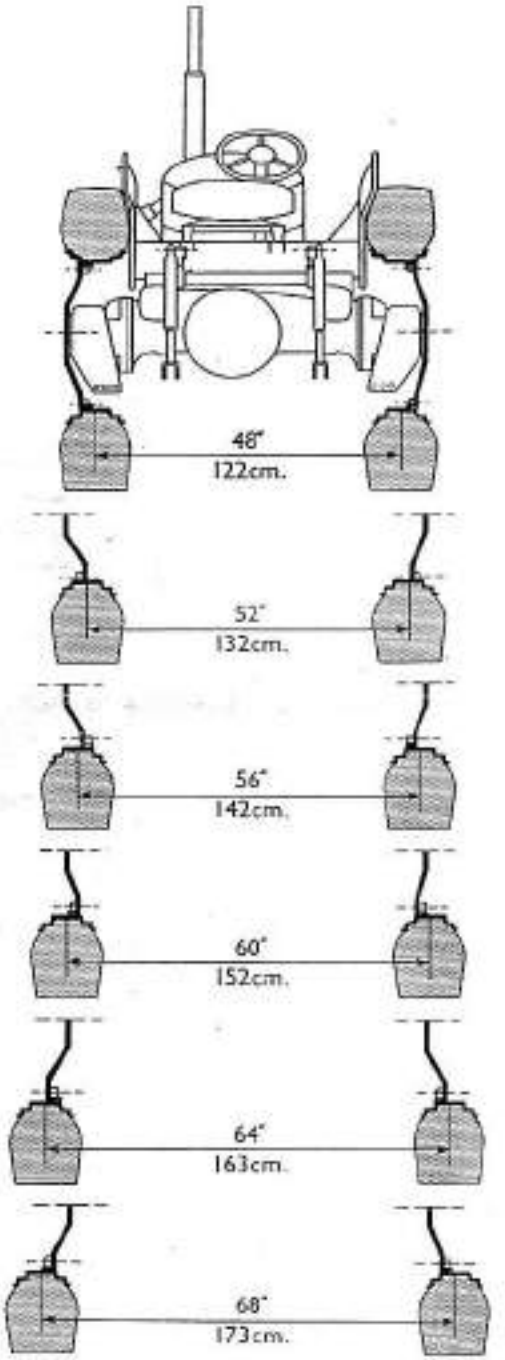

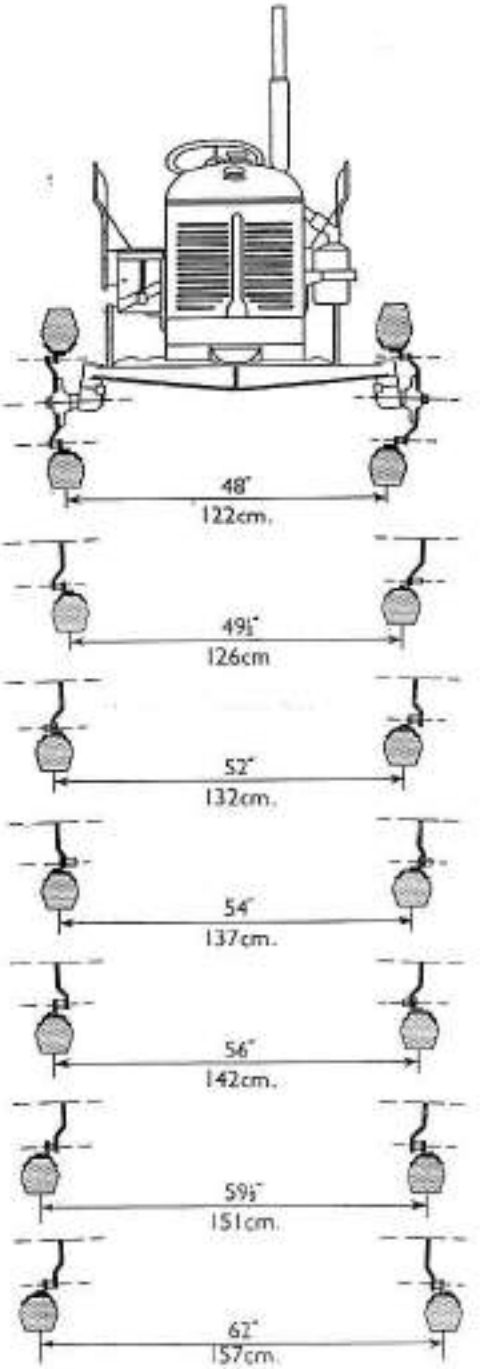

NOTE: To obtain the correct direction of rotation of the rear tyres at the wider wheel settings, 56 in., 60 in., 64 in., and 68 in., the wheels are interchanged left to right and right to left.

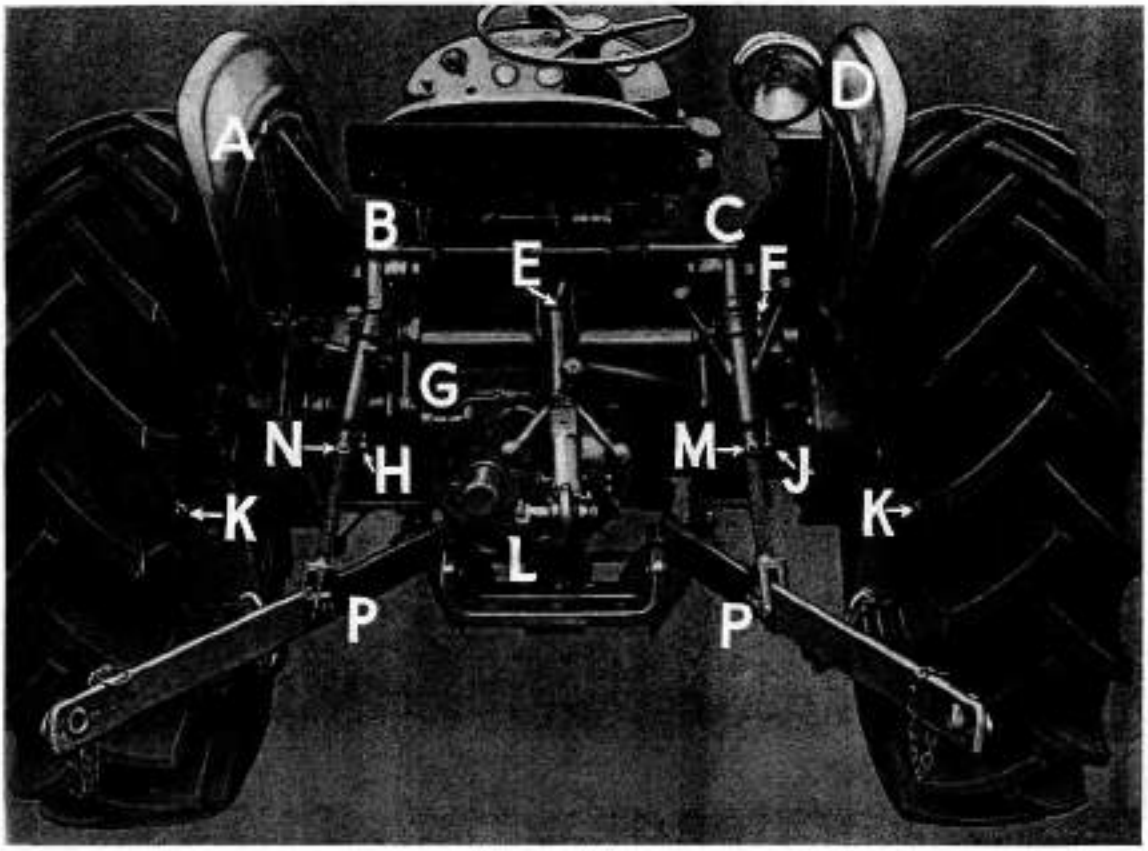

FIG. 7
HITCH POINTS AND HYDRAULIC LINKAGE

A. Hand Clutch Lever
B. N/S Levelling Lever Lubricator
C. O/S Levelling Lever Lubricator
D. Rear Flood Lamp
E. Top Link Lubricator
F. Ramshaft Lubricator
G. P.T.O. Control Lever
H. Lift Lock Bolt L/H
J. Depth Control Bolt
K. Reduction Filler Plugs
L. "T" Shaped Drawbar
M. O/S Levelling Lever Lubricator
N. N/S Levelling Lever Lubricator
P. Implement Lower Link Attachment

IMPORTANT.—For tractors fitted with centrally positioned hydraulic linkage lubricators the N/S, O/S levelling levers and top link must be set to the minimum length before lubricating.

The following recommended quantities of water and calcium chloride, per tyre, should be adhered to in order to protect the tyre down to 0° F.

Tyre size, 11 × 28 in. ... 18 gallons water.
26 pounds calcium chloride dissolved in 3 gallons water.

The amount of calcium chloride given is for the flaked type ; if crystalline calcium chloride has to be used the weight per tyre should be doubled.

ROAD WORK

When the tractor is used for road work, ensure that the tyres are inflated to the correct pressures.

Road work ... Front 28 lb. sq. inch ; Rear 18 lb. sq. inch.

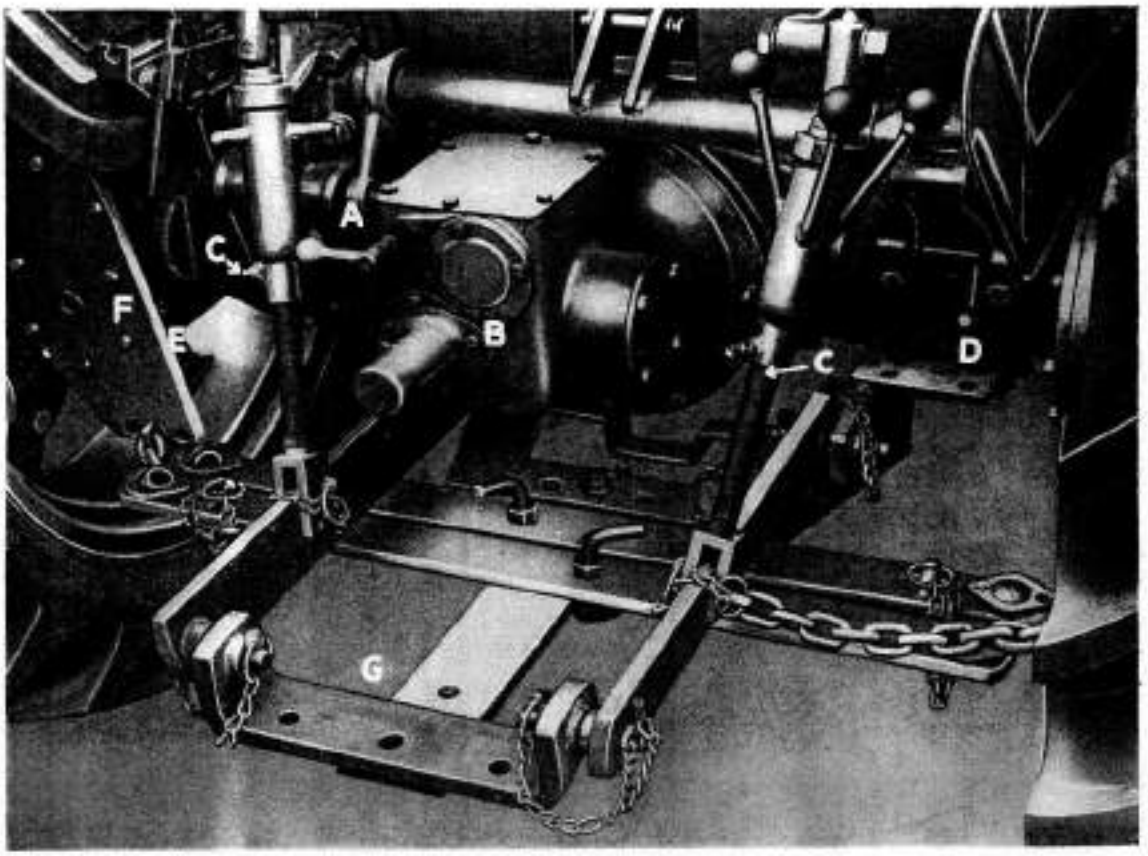

FIG. 8

TWO-SPEED P.T.O. UNIT

Tractor with lower links stowed and drawbar extended.

A. P.T.O. Control Lever
B. P.T.O. Shaft Cover
C. Levelling Lever Lubricators
D. Lift Lock Bolt
E. Reduction Unit End Plate Plug now fitted for draining
F. Level and Filler Plug
G. Drawbar—extended

When the tractor has to be taken on to the road fitted with steel wheels road bands must be fitted and the speed kept down to below 6 m.p.h., which will minimise excessive vibration. This speed is obtained when the engine is governed at 1,600 r.p.m. (normal governed position) and second gear *high range* is engaged.

HAND CLUTCH LEVER

The hand clutch lever is provided so that with the driver dismounted the tractor may be manœuvred when leading or backing up to an implement or trailer. To do this, declutch by the hand lever and engage forward or reverse gear ; the hand clutch can be re-engaged when standing beside the tractor. Use only bottom or reverse gear and minimum throttle opening. Do not run the engine with the clutch disengaged longer than is necessary, but put the gear lever into neutral if it is desired to keep the engine running.

P.T.O. AND BELT PULLEY UNITS

For tractors fitted with a two-speed power take-off unit only or tractors fitted with the two speed P.T.O. and belt pulley unit, the P.T.O. shaft speeds listed on pages 49 and 54 apply.

Hydraulic Power Lift System

(Mark II)

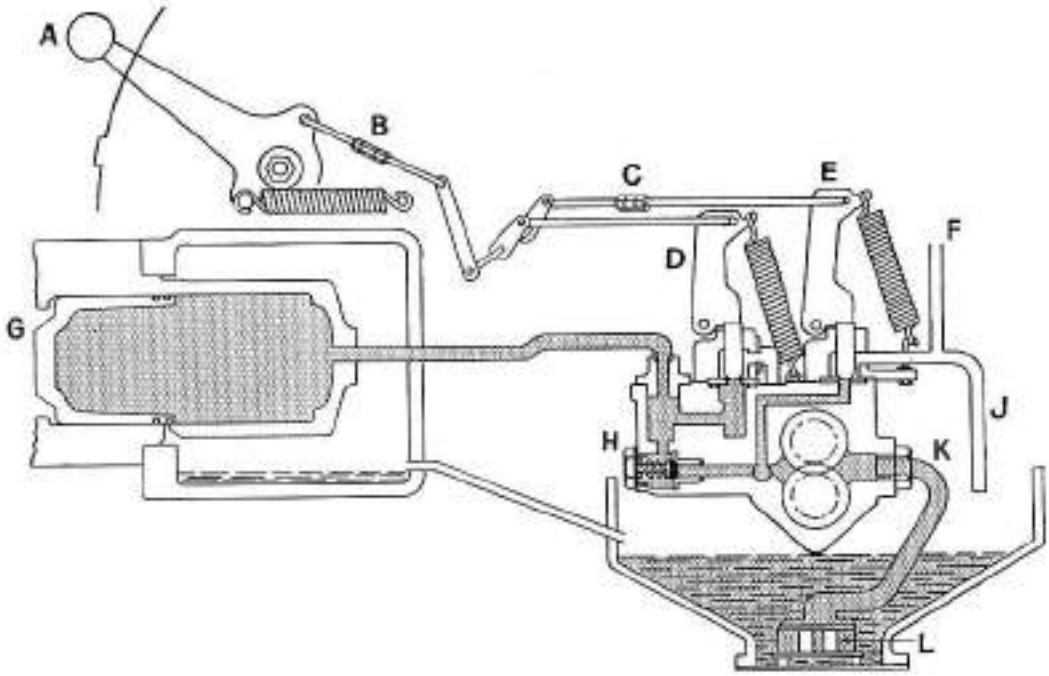

FIG. 9

DIAGRAM OF THE POWER LIFT IN THE LIFT POSITION

A. Control Lever
B. Control Lever Adjustment
C. By-Pass Control Adjuster
D. Main Control Valve
E. By-Pass Control Valve
F. Oil Pipe to Bearings
G. Ram Piston
H. Non-return Valve
J. Outlet Pipe
K. Intake Pipe
L. Magnetic and Gauze Filter

The hydraulic power lift system fitted to later series VAK/1D-30C and VAK/1C/25 tractors is similar in design to the earlier system and includes the Mark II series power lift pump with the " no load " by-pass valve and a new type automatic control lever.

The power lift pump is constantly driven at engine speed when the clutch is engaged, but when the control lever is in the lower or hold position the pump is working under " no load " conditions and the oil drawn in by the pump is used for the lubrication of the gearbox upper bearings and power take off unit.

When the control lever is placed in the " lift " position the main and by-pass relief valves are closed and oil passes through the non-return valve

to raise the lift. The pressure of the by-pass valve 1,100 lbs. per sq. in., controls the system during the lift.

When the control lever is placed in the " hold " position the by-pass valve is open and the system is controlled by the pressure of the main control valve at 1,400 lbs. per sq. in. In this position the non-return valve is closed and the oil drawn in by the pump is exhausted via the by-pass valve.

To lower the lift the control lever is placed in the lowest position and the main relief valve is opened. A restriction in the oil return pipe limits the rate of fall and prevents damage to the lift mechanism or implements.

The difference in pressure of 300 lbs. per sq. in. between the main and by-pass relief valve pressures enables heavy implements to be transported over long distances. If, however, the system is loaded to its capacity and the load is transported over uneven surfaces the lift may drop slightly due to the shock loading imposed on the system. In this instance the tractor's road speed should be reduced and the load elevated by further application of the control lever.

OPERATING PRECAUTIONS

It is essential to ensure that the correct oil level is maintained and that the correct grade of oil is used.

Always drain and renew the transmission oil at the recommended period (1,000 operational hours) and service the magnetic and gauze filter every 240 operational hours (monthly) see page 27.

Do not mix the oils used. If a different grade of oil is required due to climatic changes, always completely drain and flush the system and refill with the correct grade of oil.

Lubricate the ramshaft bearings and external lift linkage at the recommended periods.

LIFT LOCK BOLTS

Before operating the power lift make sure that the lift lock bolts are disengaged from the lift arms.

It is not advisable to use the lift lock bolt when transporting heavy loads over long distances or uneven surfaces.

LEVELLING LEVERS

To ensure an equal lift and to maintain the balance of the lift linkage, adjust the levelling levers so that the lower links are the same height before attaching the implement.

OVERLOADING

The hydraulic power lift is designed to handle loads up to 11½ cwts. with a lift height at the extremity of the lower links of 18⅝ in. When the lift angle is increased or when the lifting implement extends considerably beyond the lower links the mean height of the lift is increased.

If the lift speed is appreciably reduced due to excessive loading, do not continue operating the lift but reduce the load.

Lubrication Diagram

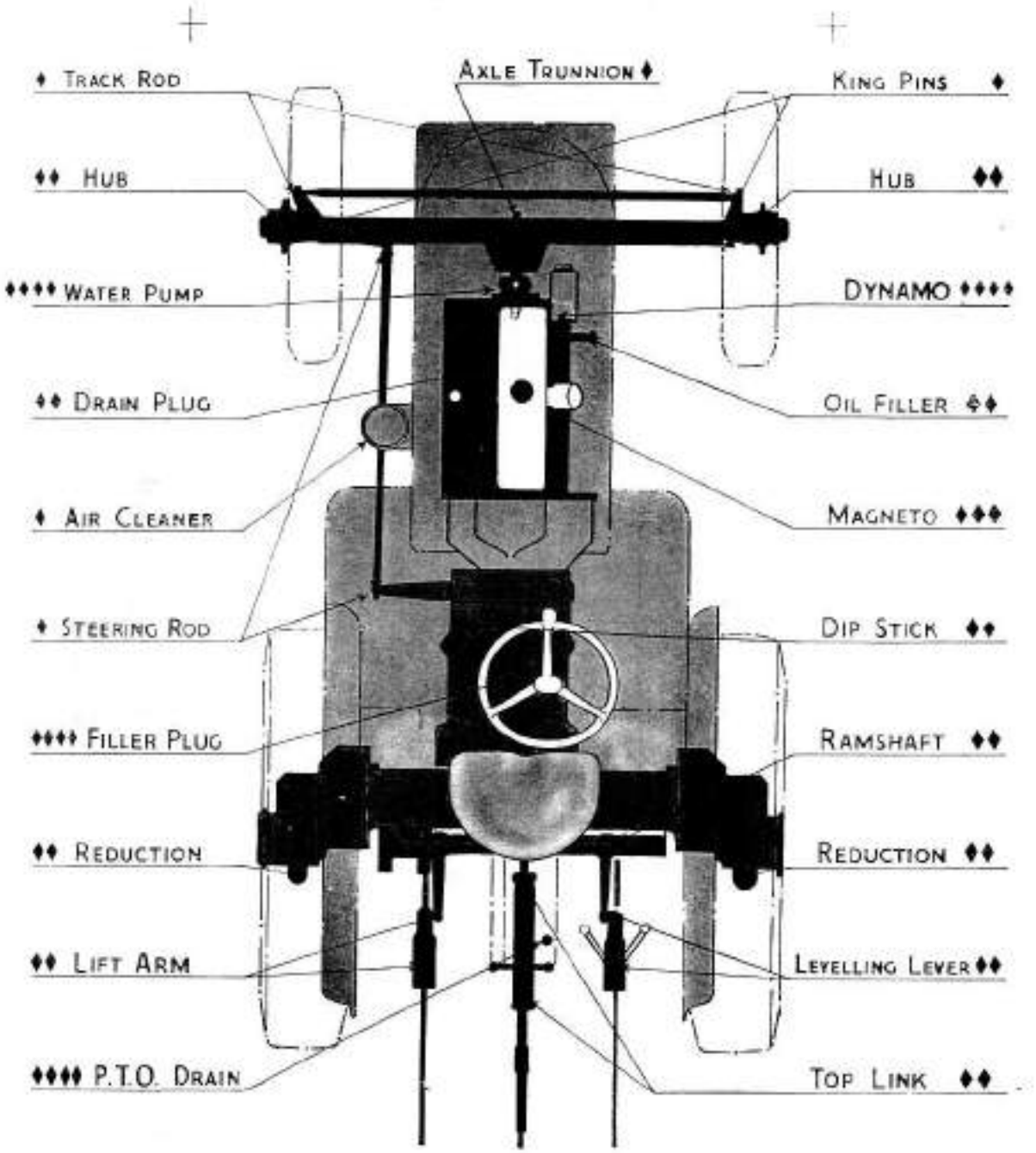

♦ Daily or 10 operational hours	♦♦♦ Monthly or 240 operational hours
♦♦ Weekly or 60 operational hours	♦♦♦♦ Seasonal or 1,000 operational hours

Care of the Tractor

RECOMMENDED FUELS AND LUBRICANTS

United Kingdom Lubricants

Unit	Lubricant	Capacity
Kerosene Engine		
Summer	Shell Tractor Oil 40 or Shell Tractor Oil Universal	14 Pints
Winter	Shell Tractor Oil 30 or Shell Tractor Oil Universal	
Petrol Engine		
Summer	Shell Tractor Oil 30 or Shell Tractor Oil Universal	14 Pints
Winter	Shell Tractor Oil 20 or Shell Tractor Oil Universal	
Air Cleaner	New engine oil	2½ Pints
Transmission Gearbox	Shell Tractor Oil 50	4 Gallons
Final Drive Reductions	Shell Tractor Gear Oil 140	2 Pints each
Grease Gun application		
General...	Shell Retinax A or CD	
Water Pump	Shell Retinax A	

Overseas Lubricants

Kerosene engine		
Temps. above 50°F. (10°C.)...	Shell X-100, 40 or Shell Rotella Oil 40	8 Litres (17 U.S. Pints)
50°F. to 20°F. (10°C. to —7°C.) ...	Shell X-100 30 or Shell Rotella Oil 30	
Below 20°F. (—7°C.) ...	Shell X-100, 20/20W or Shell Rotella Oil 20/20W	
Petrol engine		
Temps. above 90°F (32°C.)...	Shell X-100, 40 or Shell Rotella Oil 40	8 Litres (17 U.S. Pints)
90°F. to 50°F. (32°C. to 10°C.)... ...	Shell X-100, 30 or Shell Rotella Oil 30	
50°F. to 20°F. (10°C. —7°C.)...	Shell X-100, 20/20W Shell Rotella Oil 20/20W	
Below 20°F. (—7°C.) ...	Shell X-100 10W. or Shell Rotella Oil 10W	
Air Cleaner	New engine oil	1,4 Litres (3 U.S. Pints)
Transmission Gearbox		
Temps. above 90°F. (32°C.)...	Shell Dentax 140	18 Litres (4·8 U.S. Gallons)
90°F. to 20°F. (32°C. —7°C.)	Shell Dentax 90	
Below 20°F. (—7°C.) ...	Shell Dentax 80 or Shell Rotella Oil 30	
Final Drive reductions	Shell Dentax 140	1,1 Litres each (2·4 U.S. Pints)
Grease Gun application		
General...	Shell Retinax A or CD	
Water Pump	Shell Retinax A	

Fuels

Country	T.V.O.	Regular Grade Motor Gasoline	Premium Grade Motor Gasoline
United Kingdom	Shellspark	Shell	Shell Mex
U.S.A.	—	Super Shell	Shell Gasoline
Australia & N.Z.	Shellspark	Super Shell	Shell Motor Spirit
Argentine	Shell Tractor Oil	—	Nafta Shell
Austria	—	Super Shell	Shell Benzin
Belgium	Shell Carburine	Super Shell	Shell-Auto
Denmark	Shell Tractorline	Super Shell	Shell Motor Benzin
France	Shell Tractorline	Super Shell	Shell Carburant
Germany	Shell Tractorenkraftstoff	Super Shell	Shell Benzin
Italy	Shell Petrolio Agricolo	Super Shell	Benzine Shell
Norway	Shell Tractorbrenzel	Super Shell	Shell Benzin
Sweden	Shell Motorfotogen	Super Shell	Shell Benzin
Switzerland	Shell Traktorentreilstoff	Super Shell	Shell Regular Motor Spirit

Once each day or every 10 hours of operation

(1 Star on lubrication diagram)

WATER ... Check the level in the radiator and top up if necessary.

OIL ... Check the oil level in the engine and top if necessary *with the correct oil.* (See Fig. 15 and page 22.)
(This may not require topping up every evening but a check on the level gives an early warning of any tendency to increased consumption, which can then be remedied.)

GREASE

Apply a shot of grease to the king pins (2 points), steering joints (4 points) (see Fig. 10) and front axle trunnions (2 points).
Lubricate the hydraulic lift linkage with reference to the special note on page 17.

FUEL

Refill the petrol and vaporizing oil tanks.

AIR CLEANER

Empty, flush and refill with new engine oil to the correct level. (See Fig. 14.)
If working in very dusty conditions, refill the air cleaner.

Once every week or every 60 hours of operation

(2 Stars on lubrication diagram)

ENGINE (Vaporizing oil engines)

While the engine is still warm drain the sump and refill with 14 pints of the correct oil. (See Fig. 11 and page 22.)

GEARBOX AND FINAL REDUCTION HOUSINGS

Check the oil level and top up if necessary with the correct oil. (See Figs. 3 and 7, page 21.)

TYRES

Check the pressures which should be .—
Land work ... Front 28 lb. sq. inch ; Rear 12 lb. sq. inch.
Road work ... Front 28 lb. sq. inch ; Rear 18 lb. sq. inch.

NOTE.—Inflation pressures must be checked more frequently with water filled tyres.

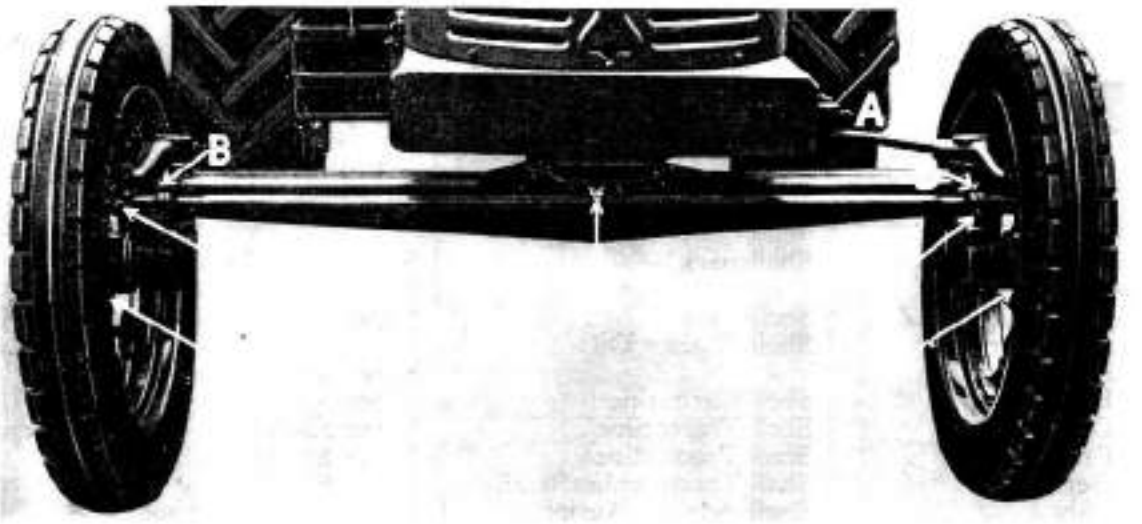

FIG. 10. STEERING AND FRONT HUB GREASE POINTS

A. Steering Rod Lubricators
B. Track Rod Lubricators
C. King Pin Lubricators
D. Front Hub Lubricators
E. Trunnion Lubricators

POWER LIFT LINKAGE

Referring to Fig. 7, and the special note on page 17 lubricate (with the grease gun) all the indicated points. Wipe off excess grease to prevent dirt adhering to the moving parts.

CLEANING. Clean the tractor as thoroughly as possible.

NUTS AND BOLTS. Check all nuts and bolts for tightness.

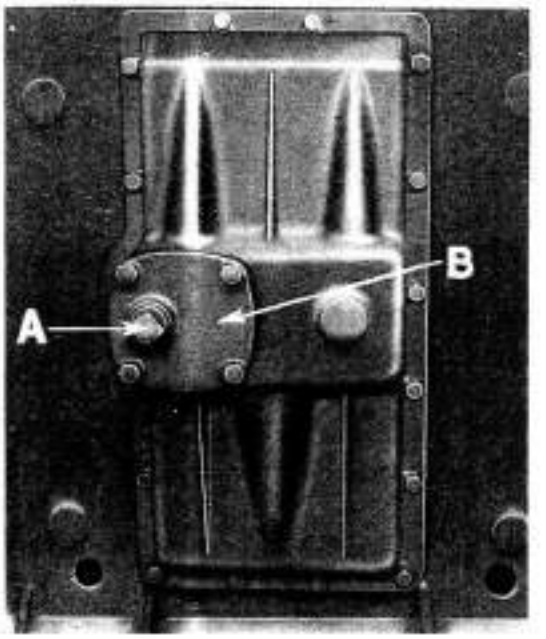

FIG. 11. ENGINE SUMP

A. Drain Plug B. Cover Plate

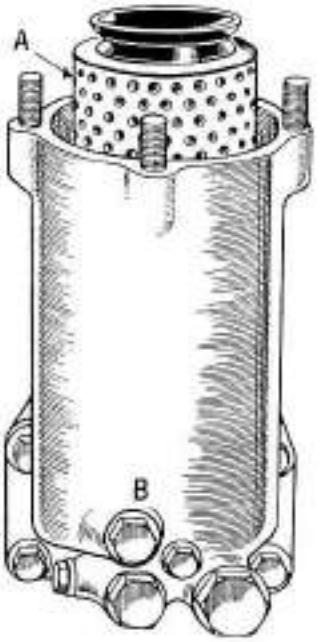

FIG. 12
ENGINE OIL FILTER

A. Element B. Drain Plug

CONTROLS

Clean all control joints, then apply a few spots of oil to all joints and levers which operate the throttle, governor, choke and brakes. Wipe off excess oil.

FRONT HUBS

Apply a shot of grease to each hub. (C, Fig. 10.)

REAR HUBS

Apply a shot of grease to each hub. (A, Fig. 13.)

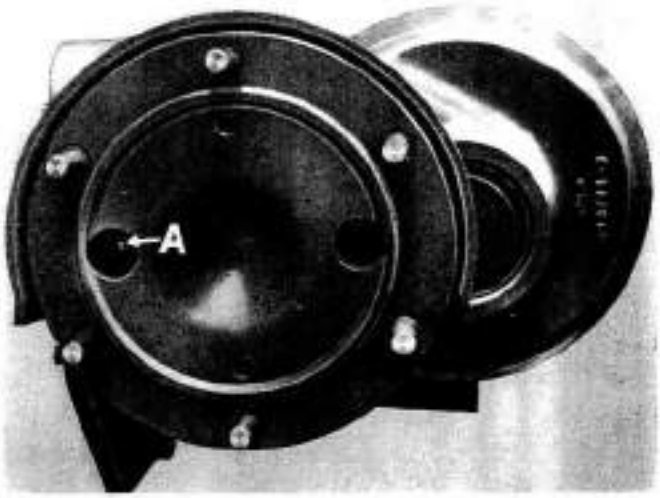

FIG. 13. REAR HUB LUBRICATORS

A. Lubricators are accessible when holes in rear wheel hub are horizontal.

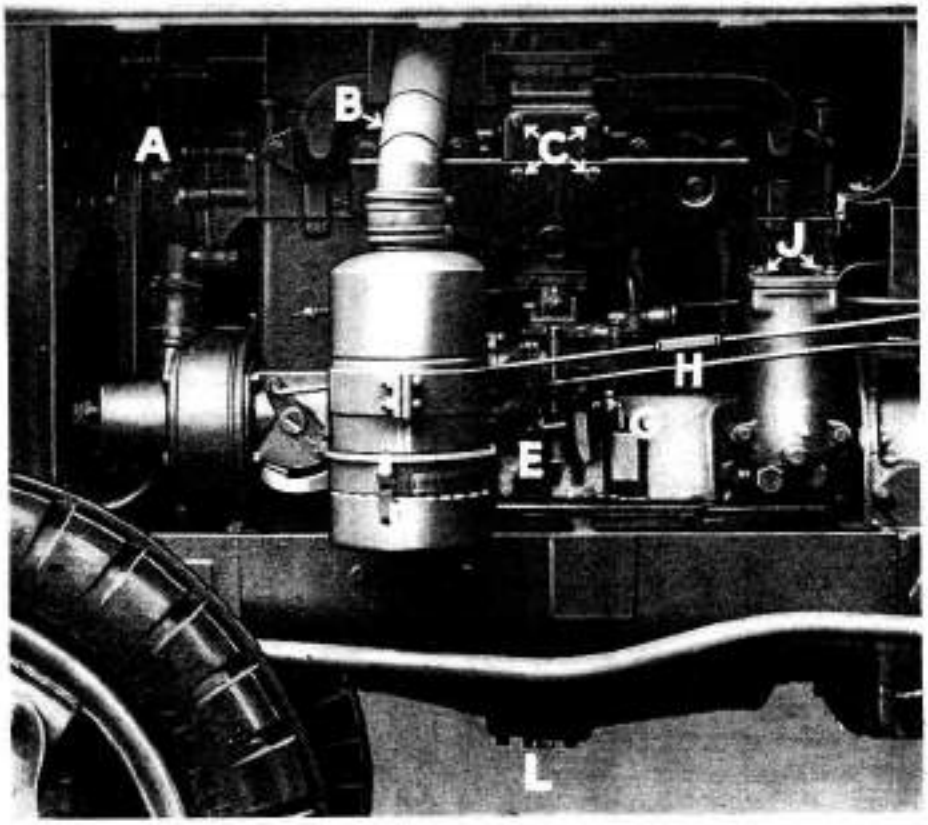

FIG. 14. NEAR SIDE VIEW OF ENGINE

A. Water Pump Lubricator
B. Pre-Heater Regulator
C. Hot-Spot Cover
E. Engine Drain Tap
F. Air Cleaner Oil Level
G. Carburetter Drain Tap
H. Control Rod Adjuster
J. Oil Filter Cover
K. Oil Filter Drain Plug
L. Engine Oil Drain Plug

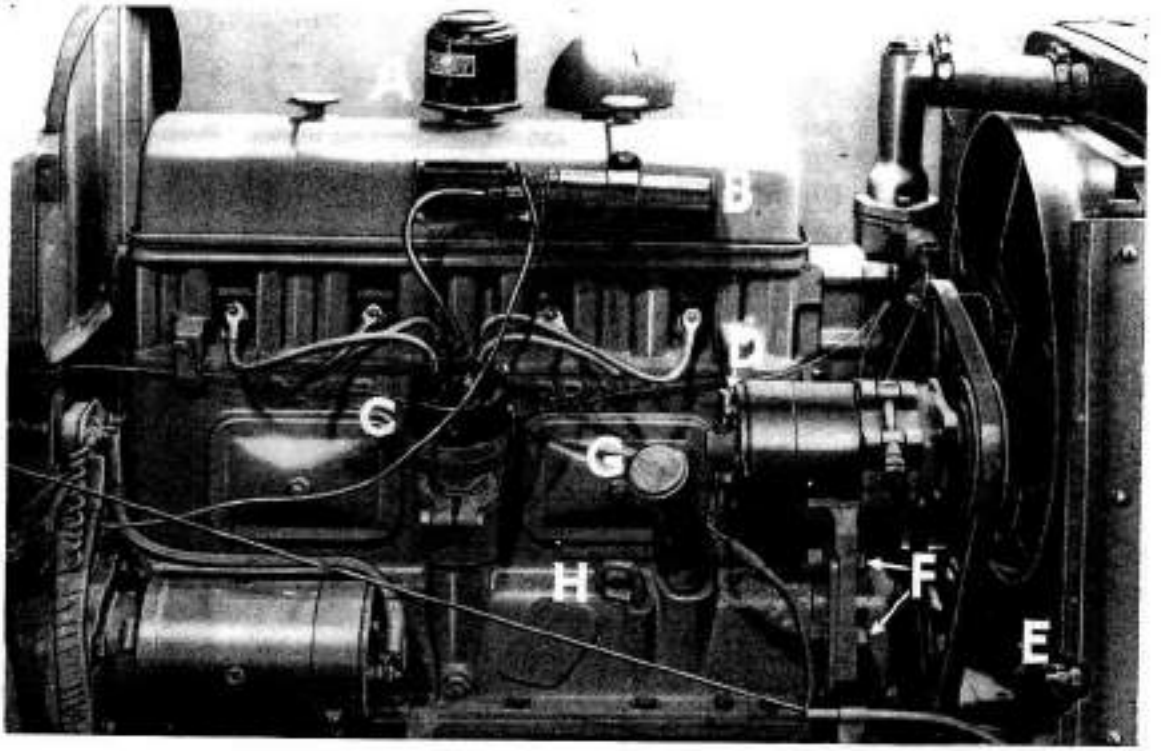

FIG. 15
OFFSIDE VIEW OF ENGINE

A. Engine Breather
B. Ignition Coil
C. Distributor
D. Dynamo Lubricator
E. Radiator Drain Tap
F. Drive Belt Adjusting Bolts
G. Engine Oil Filler Tube
H. Engine Oil Level Dipstick

NOTE: For DAVID BROWN 25 radiator drain (E) is on nearside.

Every two weeks or every 120 hours of Operation

ENGINE (Petrol engines)

While the engine is still warm, drain the sump and refill with 14 pints of the correct oil. (See Fig. 11 and page 22.)

Once each month or every 240 hours of operation

(3 Stars on lubrication diagram)

COIL IGNITION DISTRIBUTOR

Apply a little H.M.P. grease to the heel of the rocker cam and to the fibre bush. (See Figs. 16 and 25.)

BATTERY

Check condition of charge and top up to just above plate level with clean distilled water.

OIL FILTER

Drain the oil filter from plug B, Fig. 12, flush out and fit a new element.

FAN BELT ADJUSTMENT

Check the fan belt tension and readjust if necessary as instructed on page 31, see Fig. 18.

POWER LIFT FILTERS

Drain the oil from the transmission and power lift sump (see Fig. 17) *into a clean container*, remove the power lift sump plate, which releases the gauze and magnetic filter from the power lift suction pipe. The magnetic filter should be removed to enable the magnet to be thoroughly cleaned.

After cleaning the gauze with paraffin or vaporizing oil, allow it to drain. Before replacing the plate make sure that the gasket is intact, renewing if necessary. The original oil may be reused at this period.

Once every 2 months or after 500 hours operation

WATER PUMP

Apply a shot of H.M.P. grease (A, Fig. 12). at 500 hrs.

SPARKING PLUGS

Remove, clean and reset the sparking plug gaps to 0·022 in. (coil ignition) or 0·030 in. (magneto ignition). Take care not to bend the centre electrodes. It is always advisable to have a spare set of plugs, so that those which have been removed may be properly serviced. David Brown dealers have special equipment for this work.

Every 1000 hours of operation

(4 Stars on lubrication diagram)

DYNAMO

Apply a small amount of H.M.P. grease to the lubricators as shown in Fig. 15. Later series have felt pad lubrication. Use engine oil through lubrication hole provided.

ENGINE

Remove and clean the gauze strainer at the oil pump, with reference to instructions on page 31. (See Fig. 11.)

FILTERS

Remove and clean the filters in the carburetter (refer to page 35 and Fig. 24) clean the fuel tap sediment bowl.

GEARBOX, FINAL REDUCTION HOUSINGS, P.T.O.

Referring to Fig. 7 and 17 drain while warm, *flush out* and refill with the correct oil. (See page 22.)

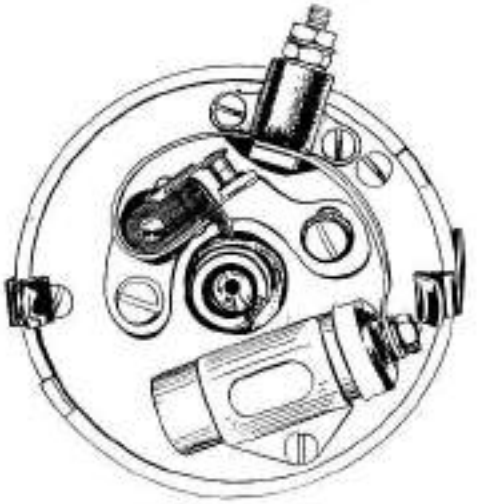

FIG. 16

Distributor and Contact Breaker Points with rotor removed. The lubrication hole is in the centre drive shaft.

BRAKES AND CLUTCH

Check for adjustment referred to on page 37.

FRONT AXLE AND STEERING

Jack up the front of the tractor and examine the steering king pins and front wheel bearings (adjustment of the front hub bearings is referred to on page 37).

Examine the front axle swivel or trunnion bracket bushes and the steering rods.

ELECTRICAL SYSTEM

Have the entire system, including the battery, checked over by an authorised dealer.

INSPECTION

Carefully examine the tractor for oil leaks. Check the brakes, throttle, blind and choke controls. Pay special attention to the tyres.

SPARES

Examine the tractor and order spares which you anticipate may be required.

MINOR SERVICE ADJUSTMENTS

These are referred to on pages 31 to 37.
Each item should be checked.

Filling, Greasing and Draining Points

THE COOLING SYSTEM

The radiator filler cap A, Fig. 28. Fill with clean, soft, water only.

The cylinder block draincock (shown at E, Fig. 14) is closed when the handle is in line with the tap. E, Fig. 15 indicates the position of the radiator drain tap. *Both taps must be open to drain the system completely.*

THE FUEL SYSTEM (Kerosene Engines)

Filler caps for petrol and vaporizing oil tanks and B and C, Fig. 28. Do not overfill, as this may result in splashing.

The fuel tap (Fig. 3) has three positions, which are indicated. Rear position allows petrol to flow into the carburetter, mid position is " OFF " and front is for vaporizing oil. The carburetter drain tap G, Fig. 14.

AIR CLEANER

The base may be removed by releasing the clamps (Fig. 14).

ENGINE

The filler and dipstick are shown at G and H, Fig. 15, the drain plug for the sump A, Fig. 11 and water pump greaser A, Fig. 14.

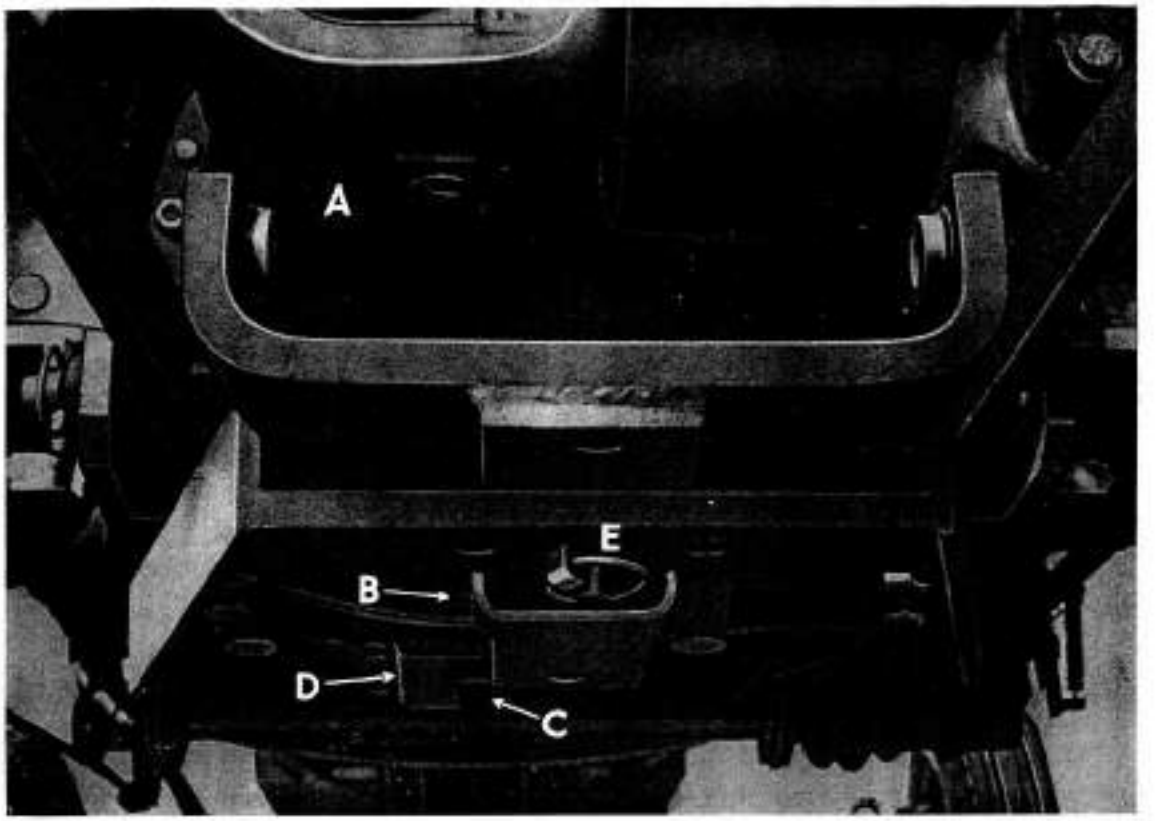

FIG. 17
TRANSMISSION DRAIN POINTS

A. P.T.O. or Pulley Drain Plug
B. Transmission Drain Plug
C. Gearbox Power Lift Drain Plug
D. Power Lift Magnetic Filter Cover Plate
E. Drawbar Lock Pin

CLUTCH

This is fitted with a carbon thrust pad and requires no lubrication.

GEARBOX

The filler and dipstick are shown at H and J, Fig. 3, and the drain plug C, Fig. 17.

FINAL REDUCTION UNITS

Filler and level plug shown at F, Fig. 8. Drain plug now fitted below F. Hub lubricators at A, Fig. 13.

POWER LIFT

Sump plate and drain plug C and D, Fig. 17.

P.T.O. OR P.T.O. AND PULLEY UNIT

Drain plug shown at A, Fig. 17. The oil level is automatically maintained from the transmission. No attention is required beyond periodic draining and refilling.

FRONT AXLE AND STEERING

The king pins and steering joints are lubricated by grease at the points in Fig. 10. The steering unit is lubricated by mist from the transmission

and requires no special attention. Two lubricators are provided at the front axle trunnions.

FRONT WHEEL HUBS

Lubricant is applied at the grease nipples (one to each hub) shown at D, Fig. 10, until grease is seen at the inner end of the hub.

IGNITION SYSTEM

Points requiring lubrication (Fig. 25) are the heel of the contact rocker cam, the fibre bush which supports the contacts, and the lubricator (Fig. 16).

ELECTRICAL EQUIPMENT

The dynamo lubrication point is shown at D, Fig. 15.

POWER LIFT RAMSHAFT AND LINKAGE

Lubrication points are indicated in Fig. 7. The spherical bearings on the top and lower links *should not* be lubricated. (See note on page 17.)

Storing the Tractor

If an occasion arises for the tractor to be stored ; to minimise the effect of corrosion and to make certain that the tractor can be put to work again without undue delay, the following is recommended :—

Drain the sump while warm, refill with new oil and run the engine for a short period so that the new oil may reach all the working parts of the engine.

Drain the water from the radiator and cylinder block, flush the system with clean water and allow to drain.

Fill the fuel tanks to the brim to prevent collection of moisture by condensation.

Grease all points fitted with grease nipples. Lubricate exposed parts such as brake connections, etc., by use of the oil can.

Clean the tractor, removing any rust and repainting where necessary.

Jack up the tractor to take the load off the tyres.

Remove the battery and send it to a David Brown dealer to receive proper attention during storage.

Cover the tractor and store it in a warm dry place.

Every month or six weeks take out the sparking plugs and pour into each cylinder a tablespoonful of new engine oil. Crank the engine a few times, replace the plugs and re-cover the tractor. Oil placed in the cylinders must be removed before restarting the engine. This may be done by twisting a piece of absorbent rag and a piece of soft wire together, inserting it through the sparking plug holes and carefully turning the engine until each piston is at the top of its stroke, when the oil in the concave heads of the pistons will be soaked up.

Minor Service and Adjustments

Engine

OIL PUMP STRAINER

This surrounds the oil pump and is accessible after removing the plate fitted to the engine sump cover (Fig. 11) and draining the oil from the engine. It is held in position by a single setscrew in the centre of the base of the strainer. Remove the setscrew from the centre of the oil strainer base and remove the strainer from the pump.

Clean the strainer by washing in paraffin and replace. Refit the plate, tighten the sump drain plug and refill the engine with the recommended grade of oil.

OIL CLEANER

Refer to Fig. 12 and Fig. 21. Felt elements are no longer recommended. Where a felt element is fitted this should be removed and discarded together with the plate C and Cork seal B. A new paper element should then be fitted. Paper elements should not be cleaned but always replaced by a new one.

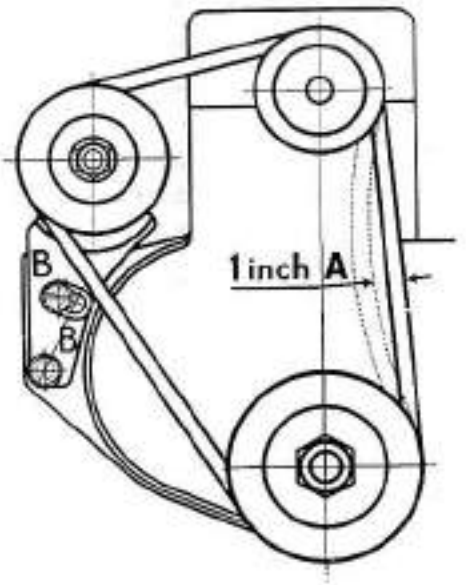

FIG. 18
FAN AND DYNAMO DRIVE BELT

A. Correct Belt Deflection, 1 inch
B. Tension Adjusting Bolts

FAN AND DYNAMO DRIVE BELT ADJUSTMENT

The drive belt should not be run taut. Correct adjustment allows *one* inch of deflection on the drive side of the fan belt A, Fig. 18. The belt is adjusted by pivoting the dynamo support bracket in the slots. Slacken the clamping bolts B, Fig. 18, and adjust the support bracket until the correct deflection is obtained, then firmly tighten the clamping bolts to secure the bracket in the new position.

GOVERNOR ADJUSTMENT

All governors are set during manufacture and if re-adjustment is required it should be carried out only by an authorised David Brown Dealer with repair personnel having the necessary experience and equipment.

If it is suspected that the governor is not working correctly, ensure that the fault is not due to a mechanical defect or stiffness in the control linkage. Check that the governor flywheels are operating the thrust button. If a tachometer is available check the normal working speed of the engine. This should be 1,600 r.p.m. with the governor control lever at the intermediate stop.

NOTE.—All the control rod joints and linkage pivots should be cleaned and lubricated before adjusting the governor.

To adjust the governor : A tachometer should be connected at the open end of the governor drive shaft which runs at engine speed, or alternatively the engine speed can be checked if the end cover is removed from the P.T.O. unit. The top drive shaft is driven at engine speed.

Referring to Figs. 19 and 20.

1. Close the governor control lever so that the heel of the cam B is hard against the operating lever.
2. Set the slow running speed of the engine at 600 r.p.m. by adjusting the nut G and the stop F, Fig. 20, on the carburetter.
3. When this adjustment is correct, lock the adjusting nut G and move the governor control lever so that the engine speed is 1,200 r.p.m.
4. Slacken the locknut C and adjust the thrust button D until the engine runs smoothly at this speed. The thrust button D should be unscrewed

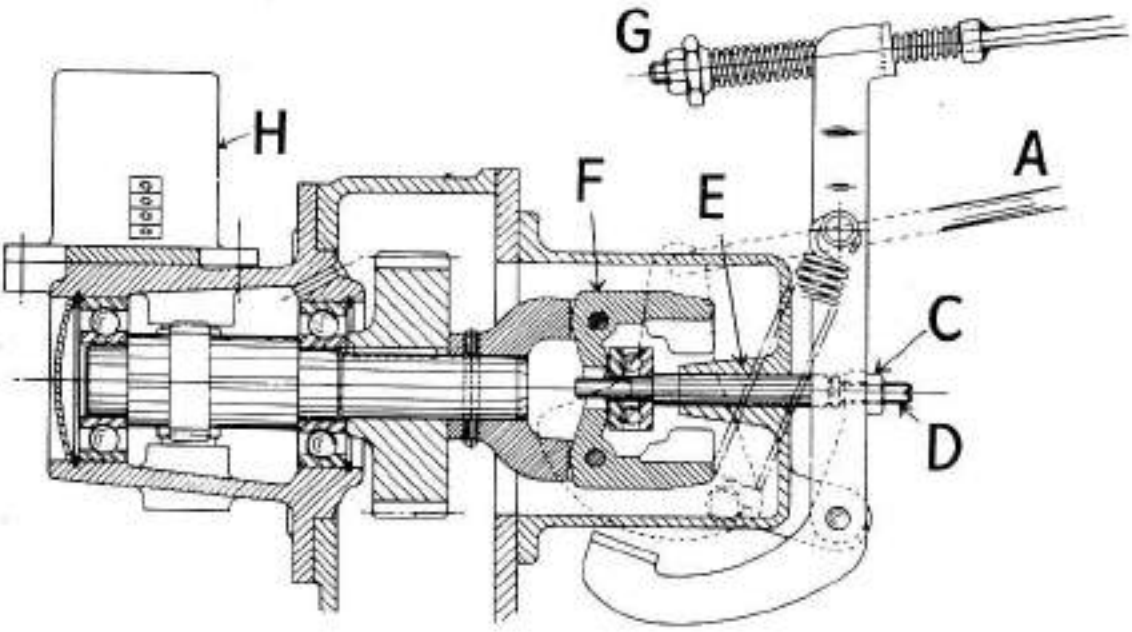

FIG. 19
SECTION OF GOVERNOR

A. Control Rod
B. Cam
C. Locknut
D. Thrust Button
E. Push Rod
F. Flyweights
G. Control Rod Spring Adjusting Nut
H. Hour-counter (when fitted)

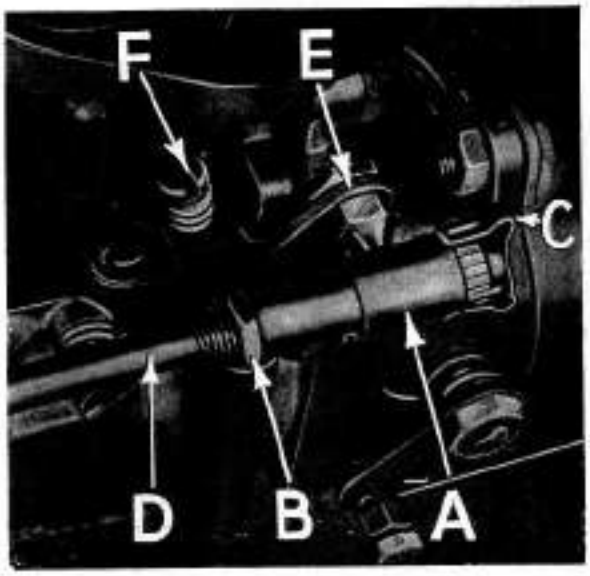

FIG. 20

CARBURETTER CONTROLS

A. Ball Joint
B. Locknut
C. Securing Spring
D. Control Rod
E. Throttle Lever
F. Idling Speed Stop

until the control lever A is just free of the push rod E. The thrust button is then screwed *in* until it just touches the push rod E, then carefully screw in two extra turns and tighten the locknut.

5. Set the governor control lever at the intermediate stop position. Adjust the intermediate engine speed at the " turnbuckle " adjuster H, Fig. 14, on the control rod to 1,750 r.p.m. under no load conditions.
6. Move the governor control lever to the maximum speed position and check that this does not exceed 2,300 r.p.m. Adjust at the control lever stop to give the correct speed. Maximum r.p.m. DAVID BROWN 25 is 2,000 r.p.m.

FIG. 21

OIL FILTER COMPONENTS

A. Cover
B. Cork Seal
C. Plate
D. Element (Felt)
E. Body
F. Drain Plug
G. Gasket
H. By-pass Valve
K. Cover Gasket

NOTE.—With paper elements items B and C are not required.

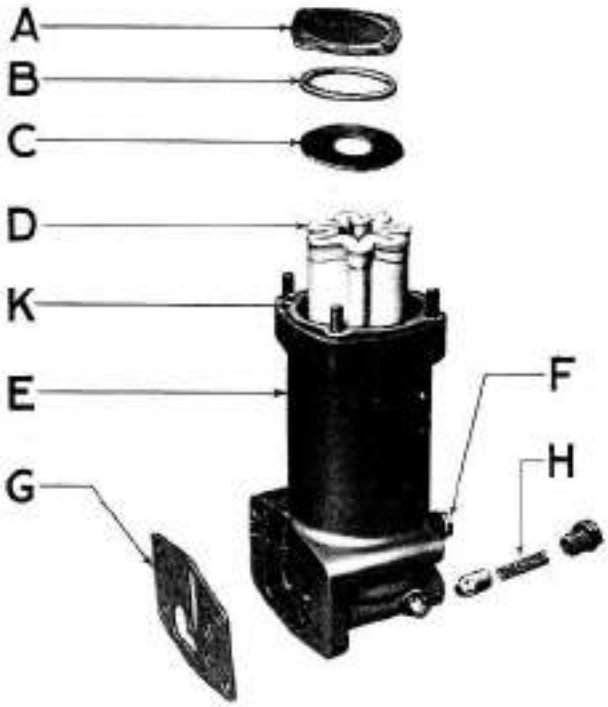

MANIFOLD

Remove carbon from the hot spot chamber after withdrawing the four setscrews and removing the cover plate. See that the gasket is intact before replacing the plate.

FIG. 22
VALVE ADJUSTMENT
A. Locknut B. Adjusting Screw

VALVE CLEARANCE

Inlet 0·015 in. ; Exhaust 0·022 in. Starting at the front of the engine, the inlet valves are Nos. 2, 3, 6 and 7 and the exhaust valves Nos. 1, 4, 5 and 8.

Adjustment is made by turning the adjusting screw on each valve rocker in or out until the desired clearance is obtained. (See Fig. 22.) The adjusting screw is finally locked by tightening the locknut down on to the face of the rocker.

Valve clearances are determined with the engine hot; they should be roughly set and the engine warmed up to normal working temperature before the final adjustment is made.

Adjust	No. 1	valve	with	No. 8	valve	fully	open.
,,	No. 6	,,	,,	No. 3	,,	,,	,,
,,	No. 4	,,	,,	No. 5	,,	,,	,,
,,	No. 2	,,	,,	No. 7	,,	,,	,,
,,	No. 8	,,	,,	No. 1	,,	,,	,,
,,	No. 3	,,	,,	No. 6	,,	,,	,,
,,	No. 5	,,	,,	No. 4	,,	,,	,,
,,	No. 7	,,	,,	No. 2	,,	,,	,,

After the final setting has been made, warm up the engine again to normal working temperature, check the tightness of the cylinder head bolts and nuts and re-check the valve clearances.

NOTE.—Cylinder head bolts should be tightened progressively in sequence (see Fig. 23).

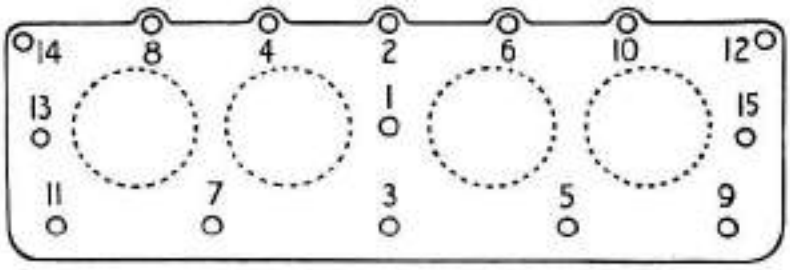

FIG. 23
CYLINDER HEAD TIGHTENING SEQUENCE

Fuel System

CARBURETTER

A gauze strainer is incorporated in the banjo-union of the fuel inlet pipe B, Fig. 24. Turn the fuel cock OFF and remove the strainer ; this may be cleaned by firing with petrol and the dust afterwards removed by air blast. Do not attempt to clean the strainer with a cloth. When reconnecting the fuel inlet pipe, ensure that the fibre washers are in good condition. If they are damaged replace them with new washers.

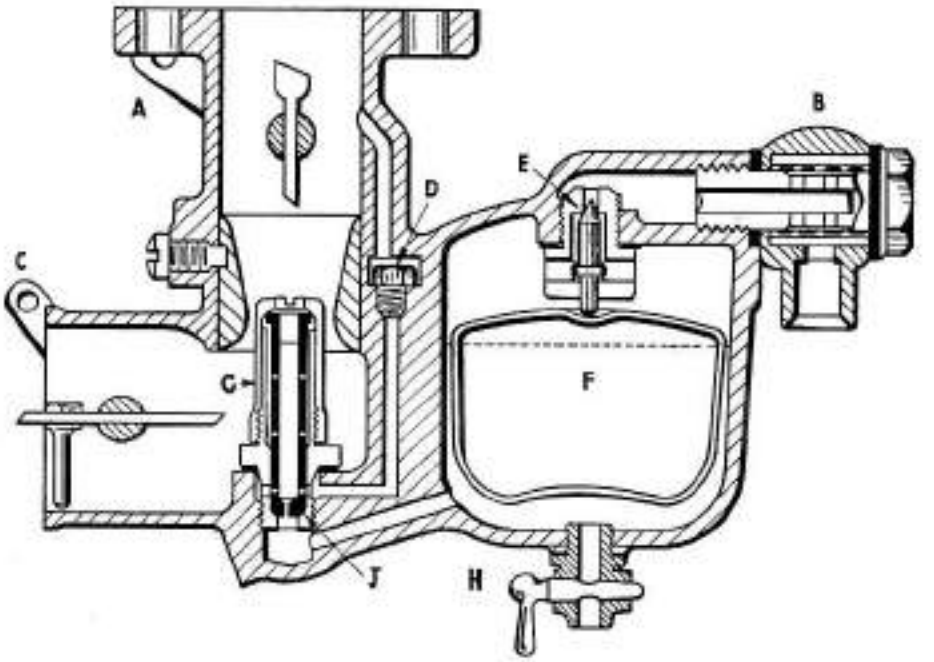

FIG. 24
SOLEX TYPE 30 FV CARBURETTER

A. Throttle Valve Lever
B. Banjo Union and Filter
C. Choke Control
D. Slow Running Jet
E. Needle Valve
F. Float Chamber
G. Main Jet Tube Cap
H. Carburetter Drain Tap
J. Main Jet

To clean the float chamber F, Fig. 24, and to obtain access to the jets, the lower half of the carburetter must be removed. Disconnect the choke control C, Fig. 24, release the clips on the air intake hose and slide the hose towards the air cleaner. Unscrew the two square headed bolts above the float chamber and the two hexagon headed bolts which are in line with the throttle spindle. Disconnect the balance pipe from the air intake elbow and withdraw the lower half of the carburetter downwards.

The float chamber and both jets are now immediately visible. Do not use a cloth to clean the carburetter ; flush out the sediment from the float chamber with either petrol or vaporizing oil and brush off any dirt with a small soft brush.

To obtain access to the main jet J, Fig. 24, the carrier tube cap G, Fig. 24, must first be removed. The slow running jet D, Fig. 24, is located

at the side of the main jet tube. After removal the jets should be cleaned by air blast. Do not use wire to clean the jets.

FUEL TAP, SEDIMENT BOWL AND STRAINER

The sediment bowl below the fuel changeover cock (Fig. 3), should be taken out and cleaned as necessary. At the same time the gauze strainer may be cleaned as recommended for the carburetter strainer, care being taken to replace the bowl in the original position, otherwise fuel leakage may occur. Renew the cork washer if damaged.

Ignition System

DISTRIBUTOR

Clean the two contact surfaces carefully and adjust to 0·015 in. This is done by turning the engine over slowly by hand until the heel of the rocker arm is at the extreme height of the cam and slackening the two screws (see E, Fig. 25), which enables the fixed contact points to be moved to obtain the correct clearance. Clean the rotor and make sure that the carbon brush in the distributor cap slides freely.

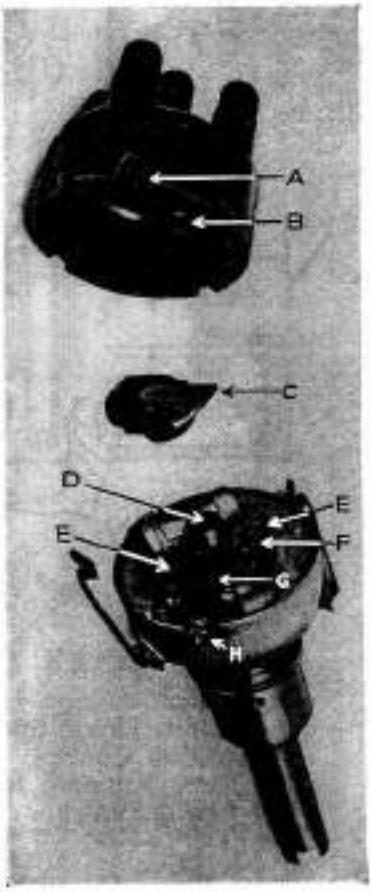

FIG. 25
DISTRIBUTOR

A. Carbon Brush
B. Cover Electrodes
C. Rotor
D. Lubrication Hole
E. Fixed Contact Screws
F. Fibre Bush Pivot
G. Contact Points
H. Switch Terminal

HIGH TENSION LEADS TO SPARKING PLUGS

Yellow to No. 1 Cylinder Sparking Plug; Red to No. 2 Cylinder Sparking Plug; Green to No. 3 Cylinder Sparking Plug; Blue to No. 4 Cylinder Sparking Plug.

SPARKING PLUGS

These are the detachable type and can be cleaned easily. All carbon and soot deposit should be removed. After re-assembly set the spark gap to 0·022 in. (coil ignition). Take care not to bend the centre electrode. Too frequent dismantling, however, destroys the sealing faces inside the plug, creating a danger of leakage, and it is therefore better to have these cleaned at a service station and to keep a spare set of cleaned plugs available for an emergency. Always fit

sparking plugs tightly into the cylinder head to avoid leakage, and see that the copper and asbestos washers are in sound condition. Keep the spanner in line with the plug when screwing or unscrewing, otherwise the insulation may crack.

NOTE.—*Do not adjust the gap by bending the centre electrode. This will result in damage to the insulation.*

Transmission

CLUTCH

To adjust the clutch pedal (H, Fig. 6). Depress it by hand until all free movement is taken out ; release the locknut (J, Fig. 6) on the pedal rod and tighten the adjusting nut until there is 1 to 1¼ in. free pedal play. Tighten the locknut on the clutch pedal rod, and adjust the hand control lever.

If the clutch slips, make the above adjustments ; if not remedied, consult a David Brown dealer.

FRONT HUBS

Adjustment to the front hub bearings is carried out by removing the hub caps and the split pins from the castellated nuts. The nuts should be tightened and slackened back sufficient to allow a 0·010 in. feeler blade to be introduced between the nut and washer.

BRAKES

The brake gear is not compensated and each side requires individual adjustment. This is checked by driving the tractor on a flat road and applying the foot brake, when it will immediately be noticed whether the tractor has a tendency to slew to one side or fails to stop in a reasonable distance. The brake on the side to which it slews will be acting harder than that on the other side and therefore adjustment is required either by slackening off the more active brake or tightening up the opposite brake.

Adjust as follows :—

Jack up both rear wheels and depress the foot pedals until the pawl engages with the ratchet, leaving approximately one-and-a-half inches free travel. Release the locknuts at the brake end of the rods and regulate the adjusting nuts K, Fig. 6 until the resistance to each wheel is equal. Check by turning each wheel by hand. Tighten the locknuts, release the foot brake and spin the wheels to check for freedom.

When the brake linings have seen considerable service and require relining, consult a David Brown dealer.

HAND PARKING BRAKE

NOTE.—When adjustment is made at the brake rods the action of the pull up type parking brake should be checked. If the action is not satisfactory adjustment should be made at the push rods under the right footplate.

Electrical System
(Maintenance)

LEADS AND TERMINALS

All leads should be secured firmly to avoid chafing of the insulation. Battery leads should be clean and tight, and lightly smeared with petroleum jelly to protect them from corrosion.

DYNAMO

If failure of the dyanmo is suspected, have it checked by a David Brown dealer, who will be able to provide a spare dynamo if extensive repairs are required.

Normal maintenance is confined to oiling every month and inspection of the brushes every six months to make sure that they are clean and properly bedded. *Replace the brushes exactly in their original positions to* ensure that they make proper contact with the surface of the commutator.

Make certain that the brushes slide freely in their guides, that the spring tensions are sufficient and that the leads have clearance and are not charred or burnt. New brushes should be bedded in by a David Brown dealer.

AMMETER

This normally does not require any attention but if faulty, it should be renewed.

BATTERY

The battery requires regular attention as follows :—

Check the level of the acid solution, topping up with clean distilled water. Do not let the level fall below the top of the plates.

Have the battery checked by a David Brown dealer every two months.

Keep the outside and top clean and dry.

Never leave the battery in a discharged condition.

STARTER

The starter incorporates Bendix drive and is operated by a mechanical switch. Maintenance comprises examination and treatment of the brushes (as recommended for those in the dynamo) and inspection for freedom of travel of the Bendix drive.

To free the Bendix drive, remove the starter from the clutch housing and clean the screwed sleeve with paraffin. Lubricate with thin machine oil and dust with graphite powder.

FUSE BOX

This is on the off side fuel tank bracket on later series Tractors.

Should any fault occur in the electrical system immediately check to see whether the fuse is burnt out.

Do not renew fuse (25 amp) until the fault has been located. Location and cure of any fault in the electrical system should be carried out by a David Brown dealer.

Tracing Engine Trouble

Possible causes of engine failure are many, and to save time and avoid interference with standard adjustments the operator is recommended to carry out a systematic search in locating the seat of the trouble. For example, when an engine fails to start, stops suddenly or runs unsatisfactorily, the cause can usually be found under one or more of three main headings, **ignition, fuel system** or **mechanical faults.**

The following sequence has therefore been planned so that, knowing the symptoms, location of the fault is simplified and its cure quickly achieved.

Engine refuses to start or stops suddenly

IGNITION SYSTEM

Check for spark at the plugs, while they are still in position, by short-circuiting the centre electrode of each plug, in turn, to the cylinder block ; use a wooden-handled screwdriver, while an assistant turns the engine fairly fast.

If no spark is obtained by this method, remove the plugs, examine the condition of the electrodes and clean if necessary. If the plugs are wet, determine whether from fuel, oil or water, and check for fuel or mechanical fault as described later.

When the plugs are cleaned and adjusted, place them on their sides on the cylinder head with the leads attached and the electrodes exposed to view. Re-check for spark by again turning the engine.

If no spark is obtained, or the spark is weak, change the plugs concerned.

If a good spark is now obtained, refit the plugs and see whether the engine will start. If it refuses to start, check back through the ignition system as follows.

Check if switched on and test the leads to the switch, the earthing terminal on the magneto, and the plug leads.

If the switch and leads are satisfactory, take off the distributor cover. See that the contact gap width is correct (0·015 in.), that the contact arm moves freely on its pivot, that the electrodes in the cover are clean and that the brush which is connected to the centre lead is free.

FUEL SYSTEM

When a spark is obtained by short-circuiting the plugs, inability to start the engine may be due to a blockage in the fuel system, in which case make sure that fuel is available at the carburetter by opening the drain cock (Fig. 14).

When fuel is available at the carburetter note if (*a*) flooding has occurred due to the choke being closed too long, or (*b*) the choke is not being used to the fullest extent. If flooding has occurred, the sparking plugs will be wet with fuel. Allow fuel to evaporate, removing plugs if necessary.

If engine stills fail to start, test for air leaks at the carburetter and inlet manifold by applying oil to the joints while the engine is turned fairly fast ; the oil will disappear if an air leak is present and it will be necessary to renew gaskets.

Further refusal to start indicates blocked jets or passages in the carburetter. (See page 35.)

When fuel is not available at the carburetter check back through the fuel system as follows :—Observe whether fuel tank is exhausted and, if fuel is available, verify that the tap is turned to the petrol position. See that the vent holes in the filler caps are not obstructed, and that the passage to the fuel tap is not blocked by scale or deposits from the fuel tank ; this can be checked by removing the filter bowl, turning the tap to petrol position. If the flow is satisfactory, check the flow of vaporizing oil in a similar manner. Examine the filter in the carburetter banjo and while this is disconnected, open the fuel cock. No flow indicates blocked fuel pipes or that the fuel tap strainer may be choked. Remove and inspect.

Mechanical Faults

ENGINE CONTROLS

These may not be functioning correctly. Examine, particularly for freedom at joints.

Engine runs unsatisfactorily

ENGINE FIRES IRREGULARLY—IGNITION

This may be due to the sparking plugs being wet, the spark too weak to fire regularly under compression, or the contact breaker not working correctly. Check and correct as explained in previous section.

ENGINE FIRES IRREGULARLY

This can be caused by the fuel mixture being either too weak or too rich.

Partially choked jets, filters or pipes, carburetter not functioning correctly or an air leakage may be responsible for a weak mixture. The slow running air screw on the carburetter may need adjustment. Investigate and correct as explained in previous section.

Flooding at the carburetter or a partly closed choke will result in a rich mixture. Investigate and correct as explained in previous section.

A rich mixture can also be caused by lack of attention to the air cleaner base, which may be dirty, overfilled or filled with oil heavier than that specified. Remove the base ; drain, clean and refill with *new* engine oil.

APPARENT LACK OF POWER (Continuously)

Possible causes are mechanical tightness of the tractor or deterioration of the engine during operation.

Test compression when engine is hot.

Test for ability of tractor to run freely by attempting to push the tractor along a smooth road with the gear lever in neutral and brakes disengaged. If tightness is suspected, examine for binding of brakes, under-inflated tyres, or transmission stiffness due to lack of lubrication or use of incorrect lubricant.

APPARENT LACK OF POWER (at intervals)—FUEL SYSTEM

This may arise from partial obstruction of the fuel system—inspect and correct as explained in previous section (also see below).

APPARENT LACK OF POWER (at intervals)—MECHANICAL

This may result from inadequate lubrication of the engine, causing partial seizure. Inspect sump level and condition of oil filter at pump. Top-up and clean as required. A check on the condition of the oil cleaner element should be made ; wash or renew.

ENGINE KNOCK (with overheating)

Due possibly to shortage of water in the cooling system fan belt slip, excessive carbon deposit on the piston crowns, etc. (causing " pinking "), the use of incorrect lubricating oil or the radiator blind not operating.

Check for blocked radiator and flush if necessary. Adjust fan belt, check lubricant and, if knocking persists, consult a David Brown dealer.

ENGINE KNOCK (without overheating)

Causes are inadequate lubrication of the engine, use of unsuitable lubricating oil, bearing slackness at crankshaft main journals and big ends, or piston slap.

After checking level and quality of lubricant, obtain advice of a David Brown dealer.

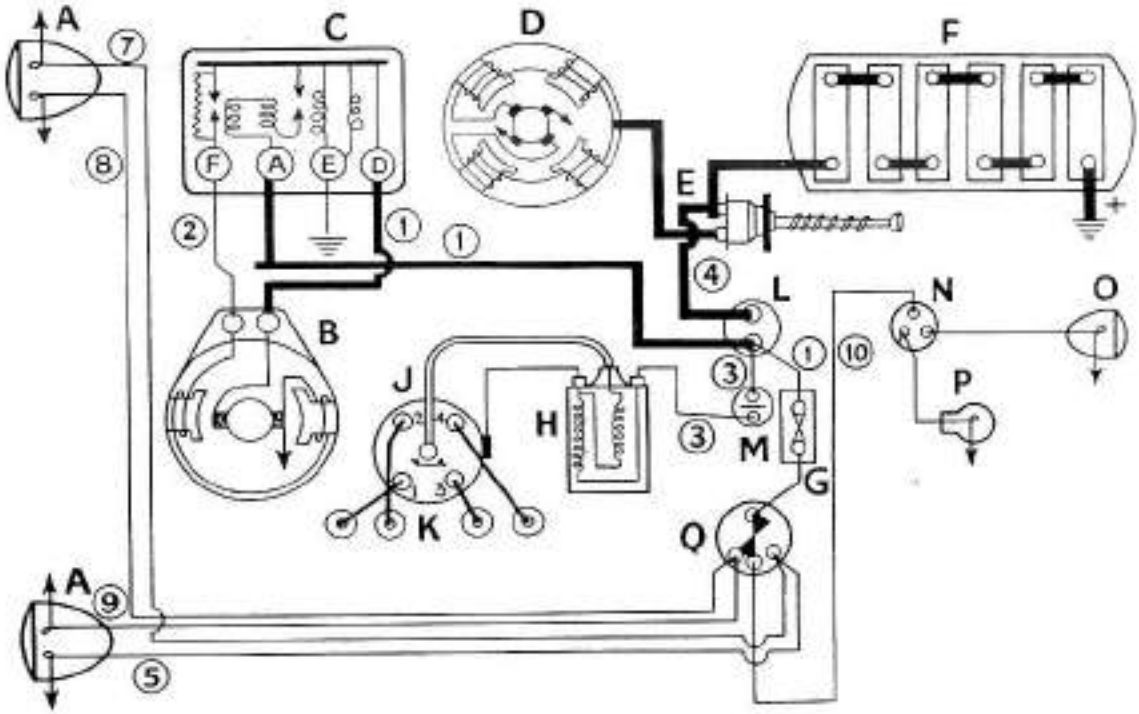

FIG. 26

ELECTRICAL SYSTEM WIRING DIAGRAM

12 volts. Positive earth. Coil Ignition.

A. Front Head Lamp	F. Battery	L. Ammeter
B. Dynamo	G. Fuse	M. Ignition Switch
C. Regulator	H. Coil	N. Change Over Switch
D. Starter Motor	J. Distributor	O. Rear Flood Lamp
E. Starter Switch	K. H.T. Leads	P. Tail Lamp
		Q. Lighting Switch

WIRING IDENTIFICATIONS

1—red. 2—blue and white. 3—purple. 4—brown. 5 and 7—blue. 8, 9 and 10—green. Black all earth leads.

Tracing Electrical Trouble

TWELVE-VOLT POSITIVE EARTH RETURN SYSTEM

The tractor electrical equipment and wiring are of robust design, reducing to a minimum the possibility of failure. They are of proprietary manufacture and in the event of electrical trouble, even though the tractor operator may possess an elementary knowledge of electrical fault location and repair, it is advisable to consult a David Brown dealer or one of the manufacturer's appointed agents.

The electrical trouble-tracing points contained in this section are intended to be used in an emergency to enable the operator to overcome an immediate difficulty when expert assistance is not available.

(Always refer to the wiring diagram on page 41.)

BATTERY (discharged)

This will result in failure of the entire electrical system, with the exception of the magneto ignition, and may be due to : (1) Electrolite not up to level (see Battery, page 38) ; (2) dirty or loose battery connections ; (3) excessive use of the starter motor ; (4) dynamo not charging (see Dynamo, page 38) ; or (5) wiring short circuit (see Wiring, page 41).

DYNAMO (not charging)

Indicated by the ammeter needle showing discharge when the tractor engine is running at normal working speed. Probable causes ; (1) Brushes worn or dirty (see Dynamo, page 38) ; (2) cut-out not operating correctly (consult a David Brown dealer) ; (3) wiring loose (examine terminals on battery, dynamo, ammeter and fuse-box) ; (4) break in wiring (see Wiring, page 41) ; or (5) failure of fuse (before replacing the fuse wire an entire check of the dynamo circuit should be carried out to ascertain the cause). Check the drive belt tension (if fitted).

NOTE.—The ammeter will show a reduced rate of charge when the battery is in a fully charged condition.

COMBINED REGULATOR AND CUT-OUT

Further failure to charge may be due to one of the following causes :—
Faulty regulator and cut out ; internal fault in the dynamo.

STARTER (not operating)

Probable causes : (1) Battery in a discharged condition ; (2) battery connections loose or dirty . (3) starter motor brushes require cleaning or renewing (see Starter, page 38) ; (4) loose wiring connections to starter ; (5) switch control not operating correctly.

APPARENT LACK OF POWER (at intervals)—MECHANICAL

This may result from inadequate lubrication of the engine, causing partial seizure. Inspect sump level and condition of oil filter at pump. Top-up and clean as required. A check on the condition of the oil cleaner element should be made ; wash or renew.

ENGINE KNOCK (with overheating)

Due possibly to shortage of water in the cooling system fan belt slip, excessive carbon deposit on the piston crowns, etc. (causing " pinking "), the use of incorrect lubricating oil or the radiator blind not operating.

Check for blocked radiator and flush if necessary. Adjust fan belt, check lubricant and, if knocking persists, consult a David Brown dealer.

ENGINE KNOCK (without overheating)

Causes are inadequate lubrication of the engine, use of unsuitable lubricating oil, bearing slackness at crankshaft main journals and big ends, or piston slap.

After checking level and quality of lubricant, obtain advice of a David Brown dealer.

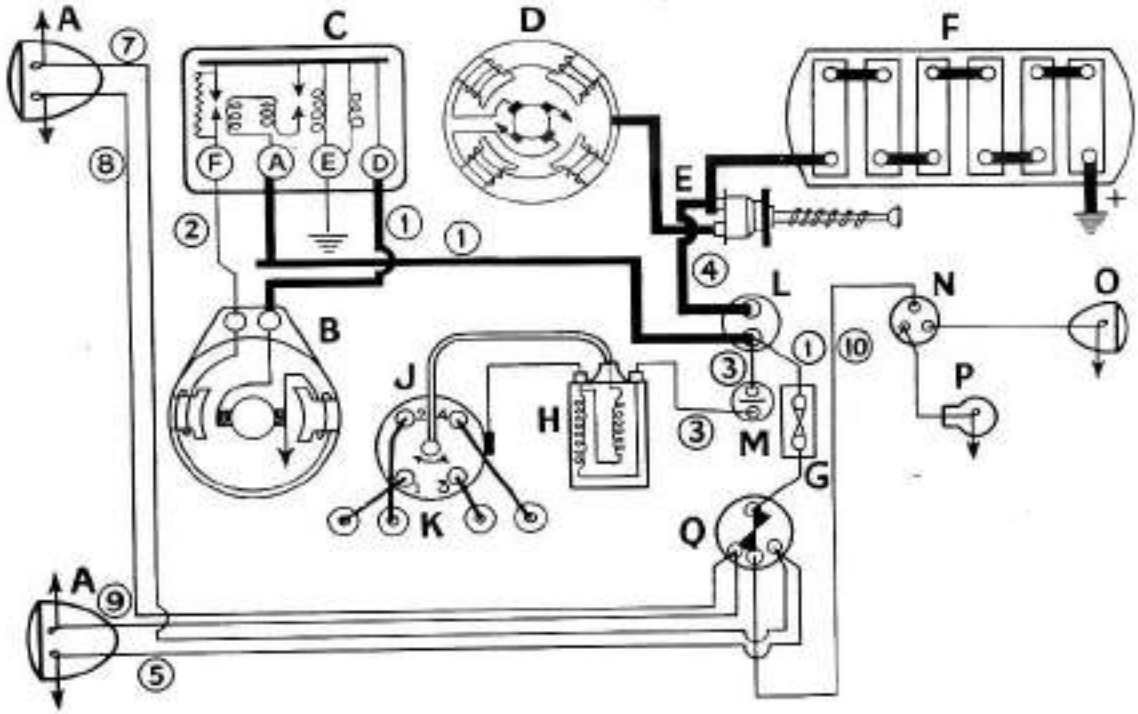

FIG. 26
ELECTRICAL SYSTEM WIRING DIAGRAM

12 volts. Positive earth. Coil Ignition.

A. Front Head Lamp	F. Battery	L. Ammeter
B. Dynamo	G. Fuse	M. Ignition Switch
C. Regulator	H. Coil	N. Change Over Switch
D. Starter Motor	J. Distributor	O. Rear Flood Lamp
E. Starter Switch	K. H.T. Leads	P. Tail Lamp
		Q. Lighting Switch

WIRING IDENTIFICATIONS

1—red. 2—blue and white. 3—purple. 4—brown. 5 and 7—blue. 8, 9 and 10—green. Black all earth leads.

Tracing Electrical Trouble

TWELVE-VOLT POSITIVE EARTH RETURN SYSTEM

The tractor electrical equipment and wiring are of robust design, reducing to a minimum the possibility of failure. They are of proprietary manufacture and in the event of electrical trouble, even though the tractor operator may possess an elementary knowledge of electrical fault location and repair, it is advisable to consult a David Brown dealer or one of the manufacturer's appointed agents.

The electrical trouble-tracing points contained in this section are intended to be used in an emergency to enable the operator to overcome an immediate difficulty when expert assistance is not available.

(Always refer to the wiring diagram on page 41.)

BATTERY (discharged)

This will result in failure of the entire electrical system, with the exception of the magneto ignition, and may be due to : (1) Electrolite not up to level (see Battery, page 38) ; (2) dirty or loose battery connections ; (3) excessive use of the starter motor ; (4) dynamo not charging (see Dynamo, page 38) ; or (5) wiring short circuit (see Wiring, page 41).

DYNAMO (not charging)

Indicated by the ammeter needle showing discharge when the tractor engine is running at normal working speed. Probable causes ; (1) Brushes worn or dirty (see Dynamo, page 38) ; (2) cut-out not operating correctly (consult a David Brown dealer) ; (3) wiring loose (examine terminals on battery, dynamo, ammeter and fuse-box) ; (4) break in wiring (see Wiring, page 41) ; or (5) failure of fuse (before replacing the fuse wire an entire check of the dynamo circuit should be carried out to ascertain the cause). Check the drive belt tension (if fitted).

NOTE.—The ammeter will show a reduced rate of charge when the battery is in a fully charged condition.

COMBINED REGULATOR AND CUT-OUT

Further failure to charge may be due to one of the following causes :—
Faulty regulator and cut out ; internal fault in the dynamo.

STARTER (not operating)

Probable causes : (1) Battery in a discharged condition ; (2) battery connections loose or dirty . (3) starter motor brushes require cleaning or renewing (see Starter, page 38) ; (4) loose wiring connections to starter ; (5) switch control not operating correctly.

STARTER PINION (locking in Flywheel Gear)

When the starter pinion is engaged with the flywheel gear and either fails to turn the engine or does not disengage when the engine commences to run, it will not be possible, in the case of the former, to turn the engine with the starting handle. Remove the three bolts securing the starter to the engine back-plate, withdraw the starter assembly and " free " the pinion.

Probable causes ; (1) Worn starter pinion, pinion spiral sleeve or flywheel gear ; (2) worn or dirty starter brushes (see Starter, page 38) ; (3) partly discharged battery ; (4) loose or dirty battery terminals ; or (5) armature shaft bent due to previous pinion seizure.

NOTE.—Do not, in any circumstances, attempt to " Free " the starter by forcing the starting handle, as this will result in serious damage.

STARTER (failure of Pinion to engage with Flywheel Gear)

Probable causes : (1) Partly discharged battery ; (2) battery terminals loose or dirty ; (3) partially siezed starter pinion (remove, clean and lubricate with thin oil) ; (4) starter brushes worn or dirty (see Starter, page 38) ; or (5) loose connections on starter motor.

WIRING HARNESS

Causes of electrical failure may be divided into two main sections :

(1) Failure of electrical equipment to operate due to a wire breakage ;

(2) A short circuit resulting in a high discharge being shown on the ammeter and the battery becoming rapidly discharged.

Trouble in these categories may take place between the battery and switches or on a particular circuit ; in the case of the latter the trouble will reveal itself only when the controlling switch is " on." In the event of either type of trouble, locate in the following manner : (1) Determine the section which is affected ; (2) examine the wiring connections (the wires may be frayed or loose) ; and (3) check the wiring for damage.

(Twelve Volt)	*Positive Earth*
Dynamo	Lucas C.39 P.
Starter Motor	Lucas M45G.
Starter Switch	Lucas ST10/L.
Regulator	Lucas R.B./107 (pos. earth).
Ammeter	C.A.V. B.M.4.
Battery	Lucas G.T.W.9A.
Fuse Box	C.A.V. No. 1m.
Lighting Switch	Lucas P.P.G.1.
Headlamp (2)	Lucas 96/4.
Tail Lamp	Lucas AT 20 IL.
Ignition Switch	Lucas P.S.6.
Coil	Lucas Q 12 L.1.
Distributor	Lucas DX 4A.
Replacement Bulbs :	
Main Head	Lucas No. 1 12V 24W.
Pilot Head	Lucas No. 207 12V 6W.
Tail	Lucas No. 207 12V 6W.

Note. Suppression equipment is fitted at the ignition system.

FAULT DIAGNOSIS AND CORRECTIONS

Minor troubles which may arise and which may be remedied by the operator are printed in bold type.

The major troubles which may develop and which can only be remedied by a David Brown dealer are noted with an asterisk*.

Fault	Remedy
FAILURE TO LIFT	
Load in excess of stipulated lift.	Reduce the load, especially if the material is loose or wet.
*Will not lift stipulated load.	Incorrect setting of main control valve. Controls require re-adjustment.
Will not lift any load or lift rate is intermittent.	**Dirt lodging on control valve seats. Increase engine speed and operate control lever to flush off dirt.** Control valve seats chipped or damaged. **Insufficient or incorrect grade of oil.** Worn ram cylinder or piston. Piston rings seized or broken, cylinder scored. Piston seized in ram cylinder. Leakage at pressure pipe unions. Intake filter choked or pipe fractured. Pump rotors and housings worn.
Lift linkage locked.	**Ensure lift lock bolts are not engaging or fouling the lift arms.**
RATE OF LIFT SLOW	Engine speed low. **Increase engine speed. Insufficient oil ; oil aerated. Top up to level. Incorrect grade of oil. Drain transmission and refill with recommended grade of oil.** Internal oil leakage at pressure pipe unions. **Intake filter dirty or blocked.** Intake pipe fractured or union leaking. Pump or hydraulic cylinder worn. Piston rings broken or seized. **Linkage and ramshaft require lubricating.**
LIFT DROPS IN HOLDING POSITION	Main control valve adjustment incorrect. **Dirt on main control valve seat, move control valve from holding to lift position with the engine at a fast speed to flush the dirt away. Check by moving control lever quickly to the lower position.**
*Main control valve faulty	Main control valve seat chipped or damaged.

*Non-return valve faulty	Non-return valve or non-return valve seat chipped or damaged. Non-return valve spring broken.
*LIFT WILL NOT LOWER	Main control valve adjustment incorrect. By-pass control valve adjustment incorrect. Ram piston seized. Lift linkage seized.
Lift locked in raised position.	**Lift lock bolt engaged.** Ramshaft bearings seized.
*LIFT LOWERS ABRUPTLY	Main control valve adjustment incorrect.
*LIFT LOWERS SLOWLY	Non-return valve and by-pass valve faulty. By-pass valve requires adjustment. Main control valve linkage requires adjustment. **Incorrect grade of lubricant used. Drain and refill with correct grade of oil.** Piston tight in ram cylinder.

FIG. 27
ARRANGEMENT OF THE POWER LIFT

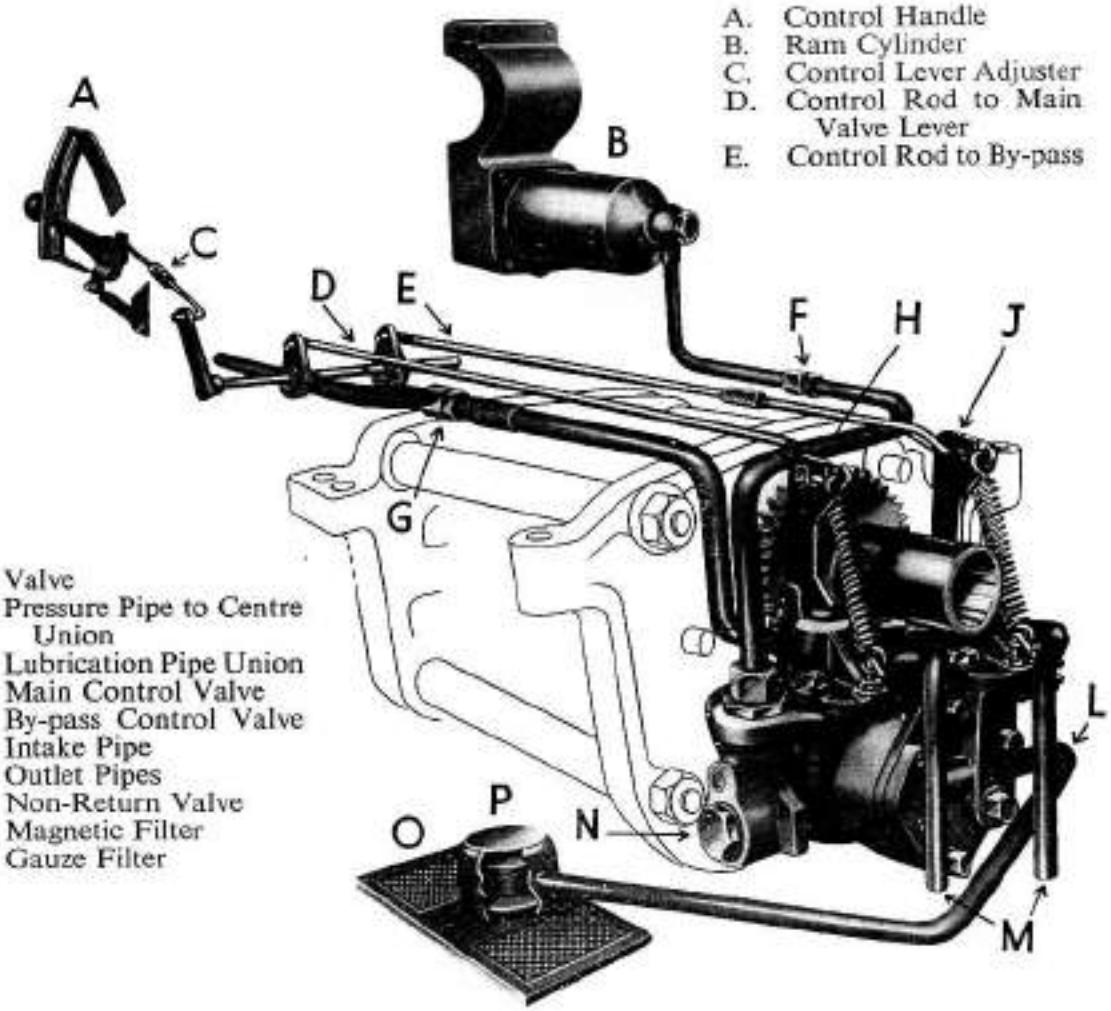

Abridged Specification

DAVID BROWN 30C

ENGINE

Four cylinder monobloc, fitted with detachable nickel-chrome cast iron wet type liners. Three bearing crankshaft with replaceable thin shell-type white metal main and big end bearings.

Bore 3⅝ in. (92·1 mm.). Stroke 4 in. (101·6 mm.). Capacity 165 cu. in. (2,705 c.c.). R.A.C. H.P. rating 21·03. Governed working speed 1,600 r.p.m. Maximum governed speed 2,300 r.p.m.

Brake H.P. Vaporizing Oil Engine :—

30·7 B.H.P. at 1,600 r.p.m.
37·5 B.H.P. at 2,300 r.p.m.
Compression Ratio 4·7 : 1.

A hand throttle control at steering column is fitted.

The alternative petrol engine is dimensionally the same as the vaporizing oil engine. The only differences are the pistons, carburetter jets and manifold.

Brake H.P. Petrol Engine :—

35·2 B.H.P. at 1,600 r.p.m.
41·0 B.H.P. at 2,300 r.p.m.
Compression Ratio 5·5 : 1.

VALVE GEAR

Overhead, non-interchangeable inlet and exhaust valves, push rod operated.

Valve clearance HOT. Exhaust 0·022 in. Inlet 0·015 in.

Lift $\frac{5}{16}$ in. Head diameters : inlet 1⅝ in., exhaust 1⅜ in.

VALVE TIMING

Inlet vale opens 5° A.T.D.C., closes 35° A.B.D.C.

Exhaust valve opens 42° B.B.D.C., closes at T.D.C.

MANIFOLD SYSTEM

Normal one-piece type manifold with automatically controlled hot spot. Air intake pipe connected to pre-heater on exhaust manifold and provided with an adjustable sleeve to regulate amount of cold air drawn into the carburetter.

Special vaporization characteristics enable the pre-heater to be cut out and the air intake drawn from a higher level through the pre-cleaner.

FUEL SYSTEM

GRAVITY FEED.	Main Tank Capacity ...	... 10 gallons.
	Petrol or Reserve Tank	... 1½ gallons.

CARBURETTER

SOLEX F.V.30 VERTICAL.

AIR CLEANER

Large capacity, oil bath type. Oil capacity, 1¼ pint.

LUBRICATION SYSTEM

Full force feed to crankshaft and camshaft bearings with intermittent restricted feed to valve rocker shaft. Crankshaft drilled for lubrication of big ends. Gear type pump, driven from camshaft by skew gears. Relief valve set to 45 lb./sq. in.

Pressure gauge on dash panel.

Full Flow oil cleaner with replaceable fabric or Micronic element. Dipstick level gauge. Capacity of sump, 14 pints.

COOLING SYSTEM

Ample water jackets and large capacity radiator protected by grille. Four-bladed fan driven by vee-belt from crankshaft pulley. Circulation by centrifugal type impeller pump, directing high velocity jets of cool water on to exhaust valve seatings and sparking plug bosses. Radiator blind operated by cable from side of dash. Temperature gauge fitted on dash panel. Capacity of system, 4 gallons.

IGNITION SYSTEM (Coil ignition)

Automatic advance 30°. Points gap 0·015 in.

Sparking plugs. Champion 18 mm. Com.8.D.

IGNITION TIMING

8° B.T.D.C. (Timing mark M on flywheel). Firing order, 1, 2, 4, 3.

Plug gap, coil ignition ·022 in.

ELECTRICAL STARTING AND LIGHTING SYSTEM

12-volt earth return. Battery, 51 amp. hour capacity ; dynamo, automatic voltage control, regulator ; starter motor ; starter switch ; fuse-box ; ammeter and lamps. Agricultural or Universal Systems optional.

CLUTCH

Borg and Beck single dry plate type 10 A6—G. Operated by foot pedal or from rear of tractor by hand lever. Carbon thrust pad.

GEARBOX AND DIFFERENTIAL

Assembled as a unit and connected to clutch shaft by splined sleeve. Shafts supported on ball bearings.

Standard equipment : 6 speeds forward, 2 reverse ; comprising 3 forward and 1 reverse speeds with supplementary High and Low gears operating on all speeds. All gears sliding type.

Oil capacity of transmission (including rear axle and power-lift system), 3½ gallons. Dipstick for oil level. Two pinion differential of bevel gear type. Spiral bevel crown wheel and pinion.

ROAD SPEEDS (6-speed Gearbox)

11·25 × 28 pneumatic Tyres.

	Engine 1,600 *r.p.m.*	2,300 *r.p.m.*
1st (1 low) ...	1·42 m.p.h.	2·05 m.p.h.
2nd (2 low) ...	2·64 m.p.h.	3·78 m.p.h.
3rd (1 high)	3·50 m.p.h.	5·04 m.p.h.
4th (3 Low)	5·24 m.p.h.	7·53 m.p.h.
5th (2 High)	6·50 m.p.h.	9·36 m.p.h.
6th (3 high)	12·9 m.p.h.	18·5 m.p.h.
Reverse Low	2·29 m.p.h.	3·29 m.p.h.
Reverse High	5·64 m.p.h.	8·10 m.p.h.

REAR AXLE AND FINAL DRIVE

Offset rear axle casing surrounds the differential and supports at its outer ends, spur gear reduction units, the drive shafts to these units being spline-coupled to the differential bevel wheels. Hubs integral with final drive shafts. Oil capacity of reduction units 2 pints each. Totally enclosed internal expanding brakes are fitted to each drive shaft of the reduction units, both independently operated by foot pedal. Brake lock pedal operates on foot brakes for parking purposes. Reduction ratio 4·11 : 1.

FRAME

Designed to comprise engine and transmission casings and to carry radiator and provide front axle fixing. Top face is ground to take engine, clutch cover, gearbox and gearbox cover, while rear end is machined to take rear axle casing.

FRONT AXLE AND STEERING

Square construction, offset pivot fixing. King pins integral with stub axles, inserted from below pivot eyes. Bronze bushes at centre pivots and king pins. Front hubs supported on Timken taper roller bearings. Steering arms fitted to upper portions of king pins by serrations and clamp bolts. Track and side steering rods tubular and fitted with self-adjusting ball joints. Steering unit of screw and nut type with column floating on single self-aligning bearing under steering wheel. Drop arm serrated to rocker shaft carried in self-lubricating bushes. Steering wheel, 16 in. diameter.

PNEUMATIC EQUIPMENT

Tyre equipment : 11·25 × 28 rear or 13 × 28 rear and 6·00 × 19 front.

Tyre pressures—Front—all conditions		28 lb. sq. in.
	Rear—field work	12 lb. sq. in.
	Rear—road work	18 lb. sq. in.

Rear wheel track adjustable from 52 in. to 67½ in.
Front „ „ „ „ 49¼ in. to 62⅛ in.

STEEL WHEEL EQUIPMENT (Optional)

Front 5 in. wide, 26 in. diameter with fin.
Rear 10 in. wide, 42 in. diameter, fitted with 20—5 in. spuds.
Row crop rear wheel 2 in. wide, 44 in. diameter fitted with 2-position spuds. Ridge riding front wheels. Front and rear wheel weights.

DRAWPLATE (Fixed)

Of fabricated construction, 3 lateral positions, fixed height 16 in.

RETRACTABLE DRAWBAR

Detachable "T" shaped drawbar (non-adjustable) fixed height 16 in., Drawbar extension U.136 extra.

POWER LIFT

All Series Tractors are fitted with inbuilt power lift hydraulically operated by gear type pump. The mark II power lift pump incorporates two control valves and a three position control lever. The system uses the transmission oil and has a gauze and magnetic filter at the intake pipe. Maximum lift loading 1,300 lbs. at end of links.

POWER LIFT LINKAGE

Incorporates levelling levers and adjustable top link. Lift arms can be locked in high or low position. Overload clutch release top link optional. Lower draught links of strengthened " L " section.

POWER TAKE-OFF (2-speed)

Bolted to rear axle and driven direct through gear box input shaft. Three-position hand lever control giving low speed, neutral and high speed. P.T.O. Shaft 1⅜ in. diameter, 6 spline (SAE 6B).

Conversion Pulley Unit (U5F). Pulley 8½ in. diameter, 5¾ in. wide. Oil level automatically maintained as with P.T.O. unit.

SPEEDS

	P.T.O. Shaft R.P.M.	Pulley R.P.M.	Belt Speed Ft. per Min.
Engine 1,600 *r.p.m.*			
Low speed	545	1,120	2,490
High speed	885	1,826	4,060

TRACTOR DIMENSIONS

Overall length	116¼ in.
Wheelbase	74⅝ in.
Width	63¾ in. (minimum)
Height	56 in.
Turning radius	11 ft. 2 in. (unaided)
Ground clearance	16½ in.

WEIGHT (on Pneumatics)

Front axle	13 cwts. 2 qrs.
Rear axle	21 cwts. 1 qr.
Total weight	34 cwts. 3 qrs.

Optional Equipment—

Auxiliary tool kit	U.49
Overload release attachment	U.37.G.
Downswept Exhaust ...	U.60.C.
Rear wheel weights ...	U.31.C.
Front wheel weights ...	U.32.C.

DRAWBARS

Fitted with optional fixed drawplate and adjustable two-piece drawbar, retractable drawbar or swivel type drawbar. Height (two-piece drawbar) is adjustable from 11 in. to 18½ in. Drawbar pull. Maximum ballasted 4,200 lbs.

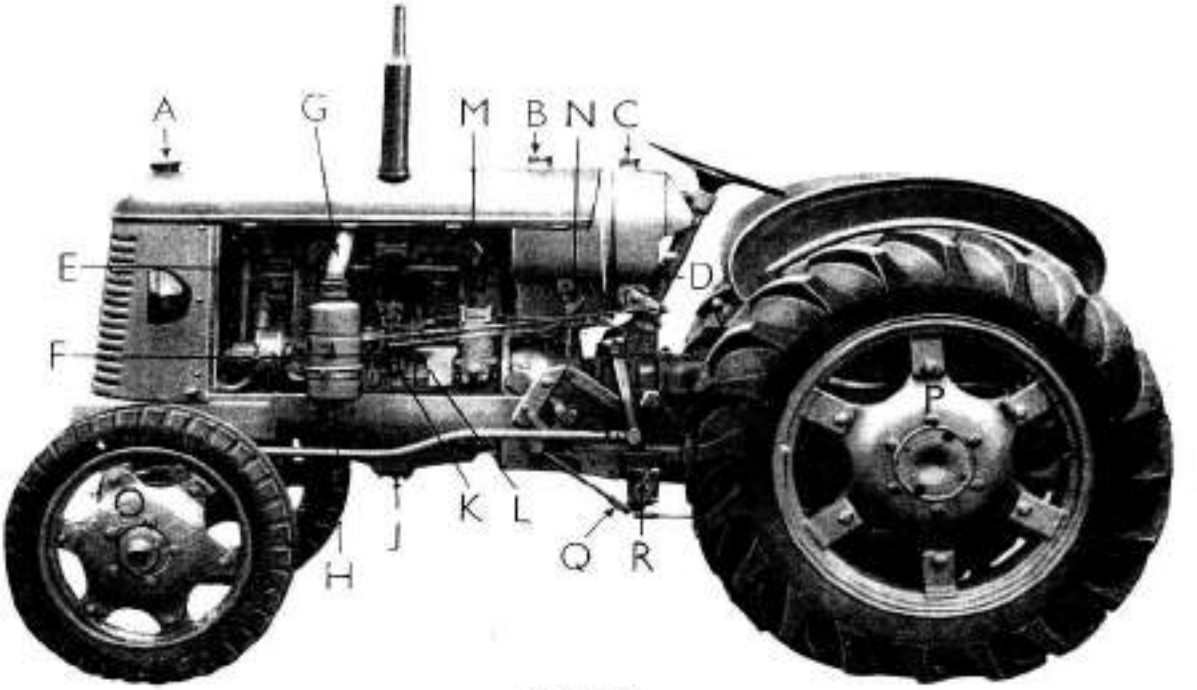

FIG. 28
NEARSIDE VIEW OF D.B. 25 TRACTOR

A. Radiator Filler
B. Main Tank (Kerosene) Filler
C. Rear Tank (Petrol) Filler
D. Governor Control Lever
E. Water Pump
F. Governor
H. Air Cleaner Oil Bowl
J. Sump Drain Plug
K. Cylinder Block Drain Tap
L. Carburetter Drain Tap
M. Oil Filter
N. Fuel Tap
O. Dished Wheel Front
P. Dished Wheel Rear
Q. Hand Clutch Pull Rod
R. Brake Rod N/S.

FIG. 29

PRE-HEATER
REGULATOR SLEEVE
30C Series

A. Pre-cleaner
B. Control Lever
C. Adjustable Sleeve
D. Pre-heater
E. Air Cleaner
F. Air Cleaner Oil Level

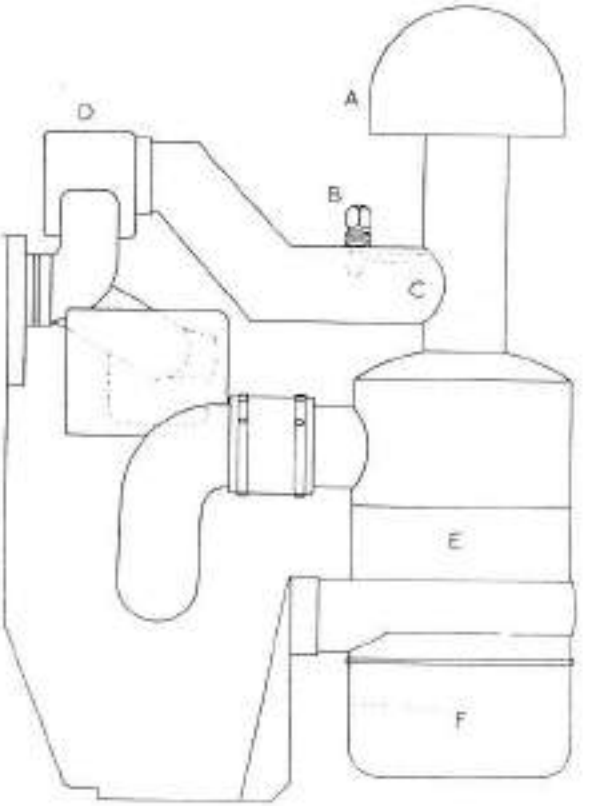

Abridged Specification

DAVID BROWN 25

ENGINE

Four cylinder monobloc, fitted with detachable nickel-chrome cast iron wet type liners. Three bearing crankshaft with replaceable thin shell-type white metal main and big end bearings.

Bore 3½ in. (88·9 mm.). Stroke 4 in. (101·6 mm.). Capacity 154 cu. in. (2,523 c.c.). R.A.C. H.P. rating 19·6. Governed working speed 1,600 r.p.m. Maximum governed speed 2,000 r.p.m.

Brake H.P. Vaporizing Oil Engine :—

28·2 B.H.P. at 1,600 r.p.m.
31·7 B.H.P. at 2,000 r.p.m.
Compression Ratio 4·7 : 1.

The alternative petrol engine is dimensionally the same as the vaporizing oil engine. The only differences are the pistons, carburetter jets and manifold.

Brake H.P. Petrol Engine :—

33·3 B.H.P. at 1,600 r.p.m.
37·5 B.H.P. at 2,000 r.p.m.
Compression Ratio 5·5 : 1.

VALVE GEAR

Overhead, non-interchangeable inlet and exhaust valves, push rod operated.

Valve clearance HOT. Exhaust 0·022 in. Inlet 0·015 in.
Lift $\frac{5}{16}$ in. Head diameters : inlet 1⅝ in., exhaust 1⅜ in.

VALVE TIMING

Inlet valve opens 5° A.T.D.C., closes 35° A.B.D.C.
Exhaust valve opens 42° B.B.D.C., closes at T.D.C.

MANIFOLD SYSTEM

Normal one-piece type manifold with automatically controlled hot spot. Air intake pipe connected to pre-heater on exhaust manifold and provided with an adjustable sleeve to regulate amount of cold air drawn into the carburetter.

FUEL SYSTEM

GRAVITY FEED.	Main Tank Capacity ...	...	10 gallons.
	Petrol or Reserve Tank	...	1½ gallons.

CARBURETTER

SOLEX F.V.30 VERTICAL.

AIR CLEANER

Large capacity, oil bath type. Oil capacity, 2½ pint.

LUBRICATION SYSTEM

Full force feed to crankshaft and camshaft bearings with intermittent restricted feed to valve rocker shaft. Crankshaft drilled for lubrication of big ends. Gear type pump, driven from camshaft by skew gears. Relief valve set to 45 lb./sq. in.

Pressure gauge on dash panel.

Full Flow oil cleaner with replaceable fabric or Micronic element. Dipstick level gauge. Capacity of sump, 14 pints.

COOLING SYSTEM

Ample water jackets and large capacity radiator protected by grille. Four-bladed fan driven by vee-belt from crankshaft pulley. Circulation by centrifugal type impeller pump, directing high velocity jets of cool water on to exhaust valve seatings and sparking plug bosses. Radiator blind operated by cable from side of dash. Temperature gauge fitted on dash panel. Capacity of system, 4 gallons.

IGNITION SYSTEM (Coil ignition)

Automatic advance 30°. Points gap 0·015 in.

Sparking plugs. Champion 18 mm. Com.8.D.

IGNITION TIMING

8° B.T.D.C. (Timing mark M on flywheel). Firing order, 1, 2, 4, 3. Plug gap, coil ignition ·022 in.

ELECTRICAL STARTING AND LIGHTING SYSTEM

12-volt earth return. Battery, 51 amp. hour capacity ; dynamo, automatic voltage control, regulator ; starter motor ; starter switch ; fuse-box ; ammeter and lamps. Agricultural or Universal Systems optional.

CLUTCH

Borg and Beck single dry plate type 10 A6-G. Operated by foot pedal or from rear of tractor by hand lever. Carbon thrust pad.

GEARBOX AND DIFFERENTIAL

Assembled as a unit and connected to clutch shaft by splined sleeve. Shafts supported on ball bearings.

Standard equipment : 6 speeds forward, 2 reverse ; comprising 3 forward and 1 reverse speeds with supplementary High and Low gears operating on all speeds. All gears sliding type.

Oil capacity of transmission (including rear axle and power-lift system), 4 gallons. Dipstick for oil level. Two pinion differential of bevel gear type. Spiral bevel crown wheel and pinion.

ROAD SPEEDS (6-speed Gearbox)

10 × 28 pneumatic tyres.

	Engine 1,600 *r.p.m.*	2,000 *r.p.m.*
1st (1 low)	1·46 m.p.h.	1·82 m.p.h.
2nd (2 low)	2·70 m.p.h.	3·38 m.p.h.
3rd (1 high)	3·59 m.p.h.	4·49 m.p.h.

ROAD SPEEDS—*Contd.*

4th (3 Low)	5·36 m.p.h.	6·69 m.p.h.
5th (2 High)	6·66 m.p.h.	8·32 m.p.h.
6th (3 High)	13·20 m.p.h.	16·5 m.p.h.
Reverse Low	2·35 m.p.h.	2·93 m.p.h.
Reverse High	5·78 m.p.h.	7·23 m.p.h.

REAR AXLE AND FINAL DRIVE

Offset rear axle casing surrounds the differential and supports at its outer ends, spur gear reduction units, the drive shafts to these units being spline-coupled to the differential bevel wheels. Hubs integral with final drive shafts. Oil capacity of reduction units 2 pints each. Totally enclosed internal expanding brakes are fitted to each drive shaft of the reduction units, both independently operated by foot pedal. Brake lock pedal operates on foot brakes for parking purposes.

FRAME

Designed to comprise engine and transmission casings and to carry radiator and provide front axle fixing. Top face is ground to take engine, clutch cover, gearbox and gearbox cover, while rear end is machined to take rear axle casing.

FRONT AXLE AND STEERING

Square construction, offset pivot fixing. King pins integral with stub axles, inserted from below pivot eyes. Bronze bushes at centre pivots and king pins. Front hubs supported on Timken taper roller bearings. Steering arms fitted to upper portions of king pins by serrations and clamp bolts. Track and side steering rods tubular and fitted with self-adjusting ball points. Steering unit of screw and nut type with column floating on single self-aligning bearing under steering wheel. Drop arm serrated to rocker shaft carried in self-lubricating bushes. Steering wheel, 16 in. diameter.

PNEUMATIC EQUIPMENT

Tyre equipment : 10″ × 28″ rear or 11″ × 28″ rear and 4·50″ × 19″ front or 6·00″ × 19″ front.

Tyre pressures—Front—all conditions	28 lb. sq. in.
Rear—field work	12 lb. sq. in.
Rear—road work	18 lb. sq. in.

Rear wheel track adjustable from 48 in. to 67½ in.
Front „ „ „ „ 49¼ in. to 62⅛ in.

STEEL WHEEL EQUIPMENT (Optional)

Front 5 in. wide, 26 in. diameter with fin.

Rear 10 in. wide, 42 in. diameter, fitted with 20—5 in. spuds.

Row crop rear wheel 2 in. wide, 44 in. diameter fitted with 2-position spuds. Ridge riding front wheels. Front and rear wheel weights.

DRAWPLATE (Fixed)

Of fabricated construction, 3 lateral positions, fixed height 14⅛ in.

RETRACTABLE DRAWBAR

Detachable "T" shaped drawbar (non-adjustable) fixed height 14⅛ in. Alternative drawbars see page 55.

POWER LIFT

All Series Tractors are fitted with inbuilt power lift hydraulically operated by gear type pump. The mark II power lift pump incorporates two control valves and a three position control lever. The system uses the transmission oil and has a gauze and magnetic filter at the intake pipe. Maximum lift loading 1,300 lbs. at end of links.

POWER LIFT LINKAGE

Incorporates levelling levers and adjustable top link. Lift arms can be locked in high or low position. Overload clutch release top link optional.

POWER TAKE-OFF (2-speed)

Bolted to rear axle and driven direct through gear box input shaft. Three-position hand lever control giving low speed, neutral and high speed. P.T.O. Shaft 1⅜ in. diameter, 6 spline (SAE 6B).

Conversion Pulley Unit (U5F.). Pulley 8½ in. diameter, 5¾ in. wide. Oil level automatically maintained as with P.T.O. unit.

SPEEDS

Engine, 1,600 *r.p.m.*	P.T.O. Shaft R.P.M.	Pulley R.P.M.	Best Speed Ft. per Min.
Low speed	545	1,120	2,490
High speed	885	1,826	4,060

TRACTOR DIMENSIONS

Overall length	113 in.
Wheelbase	74⅝ in.
Width	58¾ in. (minimum)
Height	54 in.
Turning radius	11 ft. 2 in. (unaided)
Ground clearance	15½ in.

WEIGHT (on Pneumatics)

Front axle	12 cwts. 1 qr.
Rear axle	16 cwts. 3 qr.
Total weight	29 cwts.

Optional Equipment :—

Auxiliary tool kit	U.49
Overload release attachment	U.37.D.
Downswept Exhaust ...	U.60.C.
Rear wheel weights ...	U.31.C.
Front wheel weights ...	U.32.C.

Alternative Drawbars

DAVID BROWN 25 and 30C

FIG. 30
U50C
ADJUSTABLE DRAWBAR

Height is adjustable 11 ins. to 18½ ins. Lateral adjustment by 2 in. steps to 22 ins.

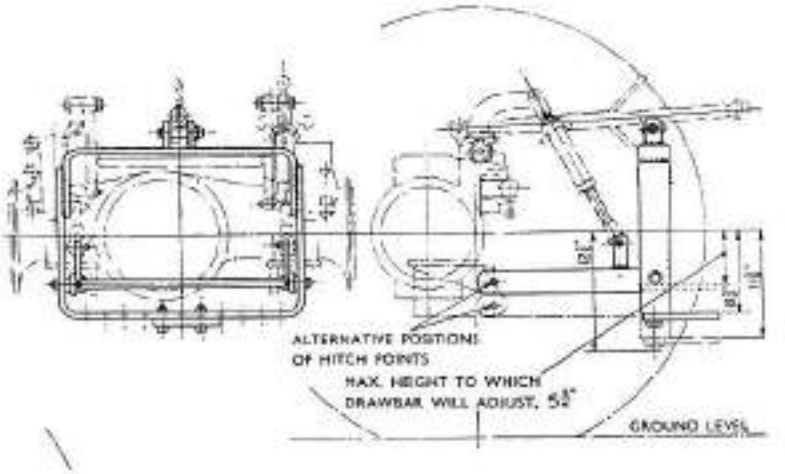

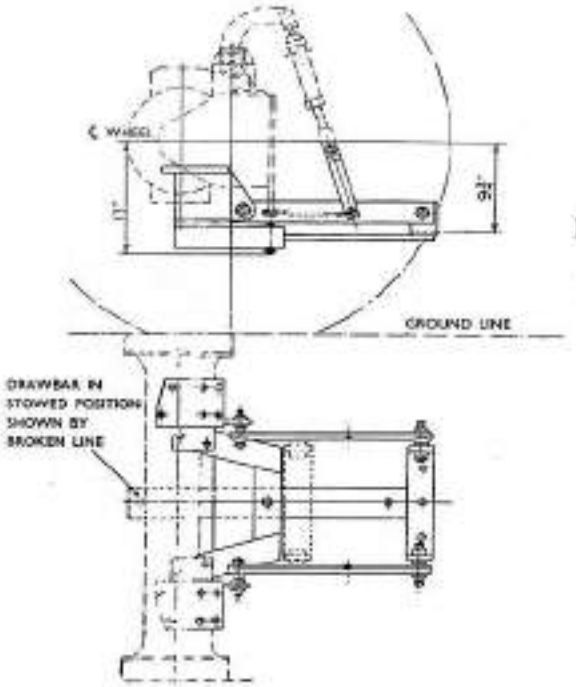

FIG. 31
U148
RETRACTABLE DRAWBAR
(Low Hitch Brackets)

Height 16 in. from ground.

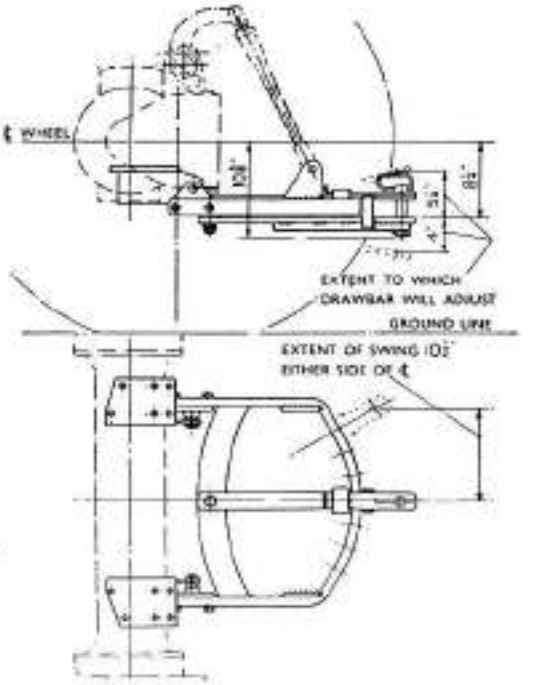

FIG. 32
PRAIRIE DRAWBAR
7 Positions
Mark II

Height of swinging type drawbar 11⅝ in.

Pull Up Type Hand Brake Control

An improved type hand brake control is fitted to later series tractors. To operate, apply the foot brakes, move handle outwards and pull upwards until brakes are secure. To release, apply pressure on foot pedals, turn handle of hand brake lever and lower.

Operation of the Traction Control Unit

Later series David Brown 25 and 30C Tractors are fitted with the new Hydraulic Traction Control Unit. This enables the tractive effort of the tractor to be increased and wheel grip to be maintained in the most difficult and adverse ploughing conditions.

The controls consist of :—

Hand lever A, Fig. 35, fitted at the hydraulic lift control.

Hand wheel A, Fig. 36, fitted at the front right side of the axle case.

TO ENGAGE THE TRACTION CONTROL

1. Move the lever A, Fig. 35, forwards to the notch. This action also places the hydraulic lift control lever in the forward position.

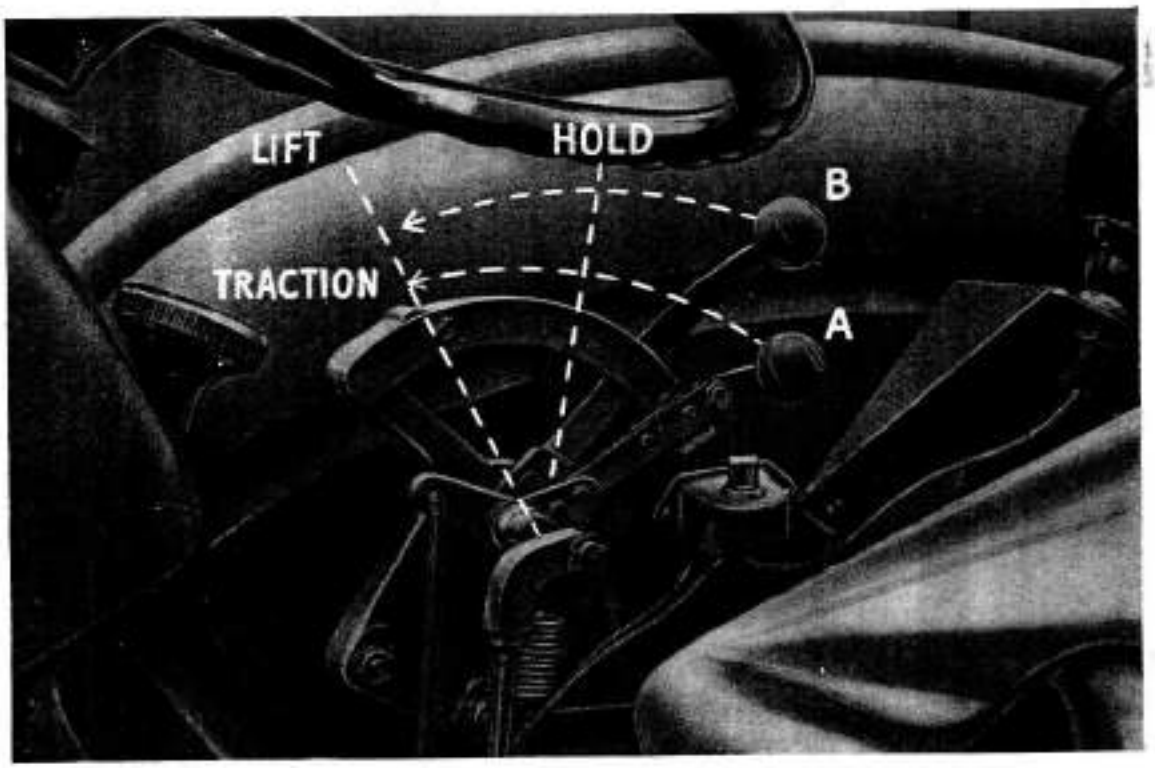

FIG. 35
TRACTION UNIT CONTROL LEVER

A. Traction Control Lever B. Hydraulic Lift Control Lever

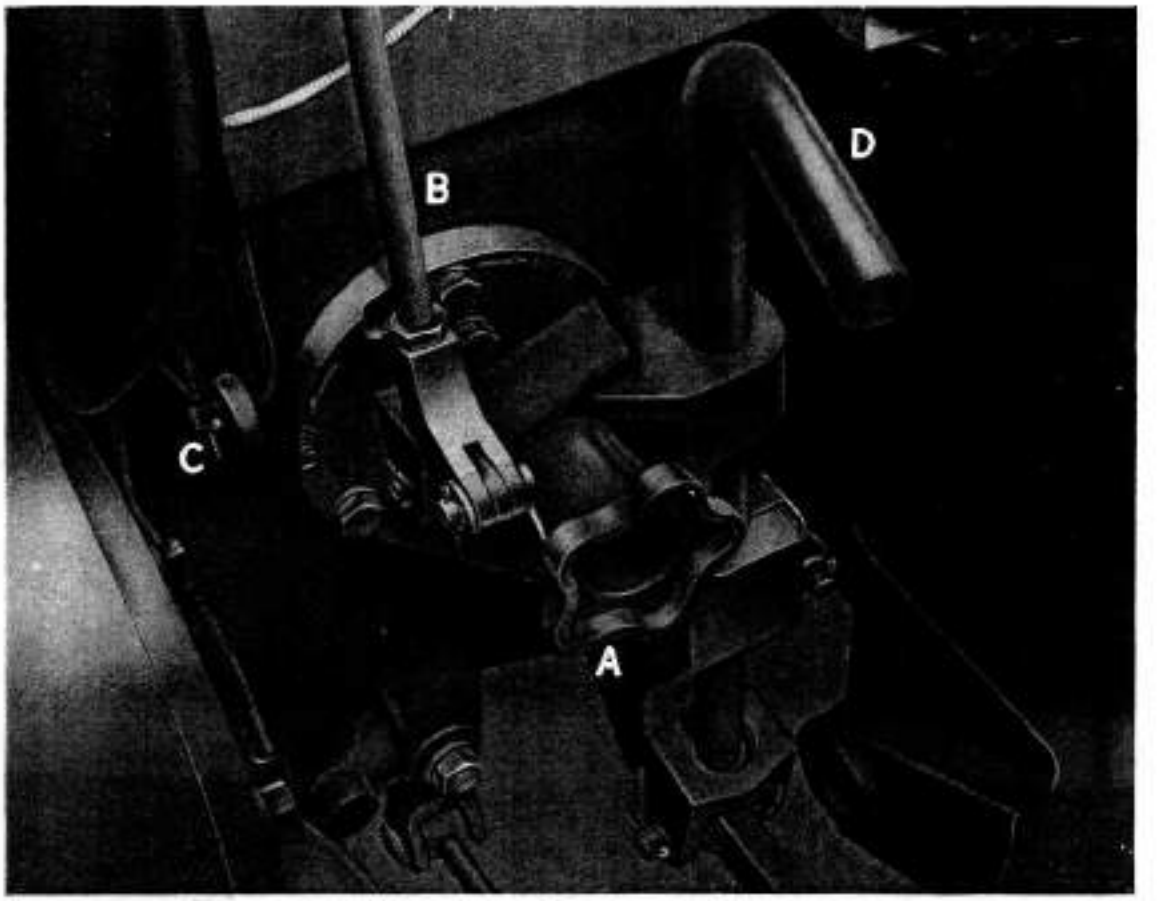

FIG. 36.
TRACTION UNIT CONTROL VALVE

A. Screw Adjustment
B. Lever Actuating Link
C. Lift Actuating Lever
D. Hand Parking Brake Lever

2. To adjust the amount of traction control, turn the hand wheel A, Fig. 36, in a clockwise direction, as indicated by the arrow to increase the traction or in an anti-clockwise direction to reduce the traction.

   The hand wheel adjusting screw has a maximum of four complete turns and each turn requires six " clicks " of the graduated adjustment.

IMPORTANT

Do not employ more traction control than is necessary for the particular ground conditions or accurate ploughing will be difficult to obtain. Once the traction control has been set for the particular ploughing conditions no further adjustment is necessary, all the land can then be worked to an even depth of cut.

TO RELEASE THE TRACTION CONTROL

A slight sideways movement of the traction control lever will release the lever from the notch. The lever returns to the OFF position by the action of the return spring. When it is desired to lift the implement simultaneously, the lift lever is held in the forward position whilst the traction control is released.

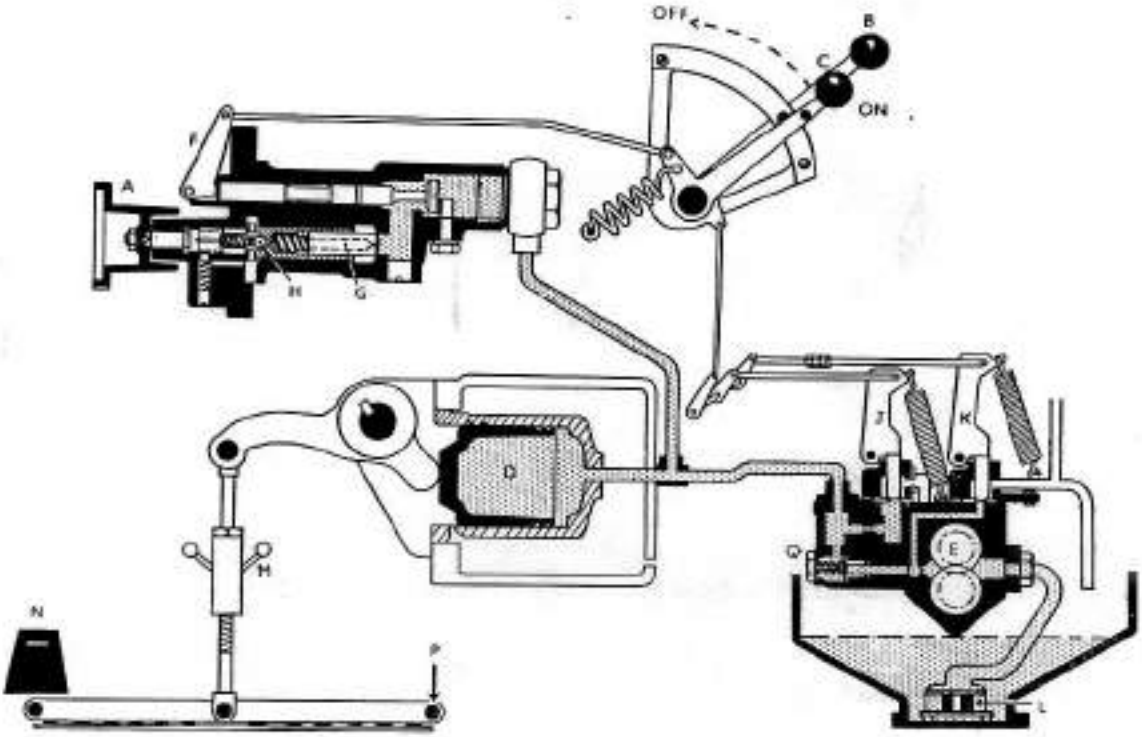

FIG. 37
DIAGRAM OF THE HYDRAULIC SYSTEM

A. Handwheel T.C.U.
B. Lift Control Lever
C. Traction Control Lever
D. Ram Cylinder
E. Hydraulic Pump
F. Operating Cam
G. Flow Control Valve
H. Pressure Control Valve
J. Main Control Valve Lever
K. By-pass Control Valve Lever
L. Magnetic Filter
M. Levelling Lever
N. Implement Weight
P. Lower Hitch Point
Q. Non-return Valve

Index

Index

DAVID BROWN INDUSTRIES LIMITED

Directors : DAVID BROWN (Chairman and Managing), A. H. BLACKWELL, F. B. MARSH, J. WHITEHEAD

Printed in England by Beck & Inchbold Ltd., Leeds and London (19229)