# DAVID BROWN

Models ■ 770 ■ 780 ■ 880 (after S.N. 52100)
■ 990 (after S.N. 467870) ■ 1200 ■ 3800 ■ 4600

Previously contained in I&T Shop Service Manual No. DB-1

I&T SHOP SERVICE

SHOP MANUAL

# DAVID BROWN

**MODELS:**
**770 - 780 - 880 (STARTING WITH SERIAL NO. 52101)**
**990 (STARTING WITH SERIAL NO. 467871)**
**1200 - 3800 - 4600**

## INDEX (By Starting Paragraph)

# INDEX (Cont.)

# CONDENSED SERVICE DATA

| GENERAL | 770 (Early) | 770 (Late) | 780 | 880 (Early) | 880 (Late) |
|---|---|---|---|---|---|
| Engine Make | Own | Own | Own | Own | Own |
| Engine Model | AD3/30 | AD3/49 | 355011 | AD3/40 | AD3/55 |
| No. of Cylinders | 3 | 3 | 3 | 3 | 3 |
| Bore, Inches | 3 11/16 | 3 11/16 | 3 15/16 | 3 13/16 | 3 11/16 |
| Stroke, Inches | 4 | 4 | 4½ | 4½ | 4½ |
| Displacement, Cubic Inches | 137 | 146 | 164 | 154 | 164 |
| Compression Ratio | 17:1 | 17:1 | 17:1 | 17:1 | 17:1 |
| Pistons Removed From: | Above | Above | Above | Above | Above |
| Cylinder Sleeves | Dry | None | None | Dry | None |
| Main Bearings, No. of | 4 | 4 | 4 | 4 | 4 |
| Generator & Starter Make | Lucas | Lucas | Lucas | Lucas | Lucas |
| Distributor Make | .... | .... | .... | .... | .... |
| Carburetor Make | .... | .... | .... | .... | .... |
| Fuel Injection Pump, Make | C.A.V. | C.A.V. | C.A.V. | C.A.V. | C.A.V. |
| Forward Speeds, No. of | 6/12 | 6/12 | 6/12 | 6/12 | 6/12 |
| Battery Terminal Grounded | Neg. | Neg. | Neg. | Neg. | Neg. |

| TUNE-UP | | | | | |
|---|---|---|---|---|---|
| Compression, Gauge Lbs. @ 63° F.: | | | | | |
| @ 150 RPM Cranking Speed | 380-400 | 380-400 | 380-400 | 380-400 | 380-400 |
| @ 250 RPM Cranking Speed | 415-435 | 415-435 | 415-435 | 415-435 | 415-435 |
| Firing Order | 1-2-3 | 1-2-3 | 1-2-3 | 1-2-3 | 1-2-3 |
| Valve Tappet Gap, Cold, Intake | 0.015(3) | 0.010 | 0.010 | 0.015(3) | 0.010 |
| Exhaust | 0.012(3) | 0.007 | 0.007 | 0.012(3) | 0.007 |
| Valve Face & Seat Angle | 45° | 45° | 45° | 45° | 45° |
| Injection Timing, See Paragraph | 88 | 88 | 88 | 88 | 88 |
| Ignition Timing, See Paragraph | .... | .... | .... | .... | .... |
| Breaker Point Gap | .... | .... | .... | .... | .... |
| Spark Plug Make & Model | .... | .... | .... | .... | .... |
| Spark Plug Gap | .... | .... | .... | .... | .... |
| Engine Low Idle RPM | 650-700 | 650-700 | 650-700 | 650-700 | 650-700 |
| Engine High Idle RPM | 2150 | 2150 | 2350 | 2350 | 2350 |
| Max. Full Load RPM | 2000 | 2000 | 2200 | 2200 | 2200 |

| SIZES—CAPACITIES—CLEARANCES | | | | | |
|---|---|---|---|---|---|
| Crankshaft Main Journal Dia. | 2.499 -2.4995 | | | | |
| Crankpin Journal Diameter | 2.373 -2.3735 | | | | |
| Camshaft Journal Dia., Front | 2.3725-2.3735 | | | | |
| No. 2 Journal Dia. | 1.8707-1.872 | | | | |
| No. 3 Journal Dia. | 1.8409-1.8422 | | | | |
| No. 4 Journal Dia. | 1.794 -1.7954 | | | | |
| No. 5 Journal Dia. | 1.7475-1.7488 | | | | |
| No. 6 Journal Dia. | .... | .... | .... | .... | .... |
| Piston Pin Diameter | 1.2495-1.250 | | | | |
| Cylinder Bore Diameter | 3.8125-3.8135 | 3.9388-3.9396 | 3.9388-3.9396 | 3.8125-3.8135 | 3.9388-3.9396 |
| Piston Skirt Diameter | 3.8055-3.8063 | 3.9315-3.9323 | 3.9315-3.9323 | 3.8055-3.8063 | 3.9315-3.9323 |
| Valve Stem Diameter | 0.3722-0.3732 | | | | |
| Main Bearings Running Clearance | 0.002-0.004 | | | | |
| Rod Bearings Running Clearance | 0.002-0.004 | | | | |
| Crankshaft End Play | 0.002-0.010 | | | | |
| Camshaft End Play | 0.002-0.006 | | | | |
| Cooling System—Quarts | 10 | 10 | 10 | 11 | 11 |
| Crankcase—Quarts (With Filter) | 6½ | 6½ | 6½ | 6½ | 6½ |
| Transmission—Quarts (Includes Differential & Hydraulic System) | 24 | 24 | 24 | 24 | 24 |
| Final Drive, Each—Pints | 1¾ | 1¾ | 2½ | 4¾ | 4¾ |
| Steering Gear—Pints | 2½ | 2½ | 2½ | 2½ | 2½ |
| Power Steering System | N/A | N/A | N/A | N/A | N/A |
| Fuel Injection Pump—Pints | .... | .... | .... | .... | .... |

— Refer To Footnotes on Page 5 —

# CONDENSED SERVICE DATA

| GENERAL | 990 (Early) | 990 (Late) | 1200 | 3840 | 4600 |
|---|---|---|---|---|---|
| Engine Make | Own | Own | Own | Own | Own |
| Engine Model | AD4/47 | 449001(4) | AD4/55 | 349101 | 355101 |
| No. of Cylinders | 4 | 4 | 4 | 3 | 3 |
| Bore, Inches | 3⅝ | 3 11/16 | 3 15/16 | 3 13/16 | 3 11/16 |
| Stroke, Inches | 4½ | 4 | 4½ | 4 | 4½ |
| Displacement, Cubic Inches | 185 | 186 | 219 | 146 | 164 |
| Compression Ratio | 17:1 | 17:1 | 17:1 | 7:1 | 7:1 |
| Pistons Removed From: | Above | Above | Above | Above | Above |
| Cylinder Sleeves | Wet | None | None | None | None |
| Main Bearings, No. of | 3 | 3 | 3 | 4 | 4 |
| Generator & Starter Make | Lucas | Lucas | Lucas | Lucas | Lucas |
| Distributor Make | .... | .... | .... | AC-Delco | AC-Delco |
| Carburetor Make | .... | .... | .... | Zenith | Zenith |
| Fuel Injection Pump, Make | C.A.V. | C.A.V. | Simms | .... | .... |
| Forward Speeds, No. of | 6/12 | 6/12 | 6/12 | 6/12 | 6/12 |
| Battery Terminal Grounded | Neg. | Neg. | Neg. | Neg. | Neg. |

## TUNE-UP

| | | | | | |
|---|---|---|---|---|---|
| Compression, Gauge Lbs. @ 68° F.: | | | | | |
| @ 150 RPM Cranking Speed | 380-400 | 380-400 | 380-400 | 122-130(1) | 122-130(1) |
| @ 250 RPM Cranking Speed | 415-435 | 415-435 | 415-435 | 143-150(2) | 142-150(2) |
| Firing Order | 1-2-4-3 | 1-2-4-3 | 1-2-4-3 | 1-2-3 | 1-2-3 |
| Valve Tappet Gap, Cold, Intake | 0.015(3) | 0.010 | 0.010 | 0.010 | 0.010 |
| Exhaust | 0.012(3) | 0.007 | 0.007 | 0.007 | 0.007 |
| Valve Face & Seat Angle | 45° | 45° | 45° | 45° | 45° |
| Injection Timing, See Paragraph | 91 | 92A | 96 | .... | .... |
| Ignition Timing, See Paragraph | .... | .... | .... | 118 | 118 |
| Breaker Point Gap | .... | .... | .... | 0.020 | 0.020 |
| Spark Plug Make & Model | .... | .... | .... | AC 44xLS | AC 44xLS |
| Spark Plug Gap | .... | .... | .... | 0.025 | 0.025 |
| Engine Low Idle RPM | 650-700 | 650-700 | 650-700 | 500 | 500 |
| Engine High Idle RPM | 2350 | 2350 | 2450 | 2350 | 2350 |
| Max. Full Load RPM | 2200 | 2200 | 2300 | 2200 | 2200 |

## SIZES—CAPACITIES—CLEARANCES

| | | | | | |
|---|---|---|---|---|---|
| Crankshaft Main Journal Dia. | 2.499 -2.4995 | | | | |
| Crankpin Journal Diameter | 2.248-2.2485 | 2.373-2.3735 | | | |
| Camshaft Journal Dia., Front | 1.870 -1.872 | | | 2.3725-2.3735 | |
| No. 2 Journal Dia. | 1.825 -1.827 | | | 1.8707-1.872 | |
| No. 3 Journal Dia. | 1.811 -1.8113 | | | 1.8409-1.8422 | |
| No. 4 Journal Dia. | 1.811 -1.8113 | | | 1.794 -1.7954 | |
| No. 5 Journal Dia. | 1.763 -1.765 | | | 1.7475-1.7488 | |
| No. 6 Journal Dia. | 1.747 -1.749 | | | .... | .... |
| Piston Pin Diameter | 1.250-1.2502 | 1.2495-1.250 | | | |
| Cylinder Bore Diameter | 3.625-3.6255 | 3.9388-3.9396 | | | |
| Piston Skirt Diameter | 3.618-3.619 | 3.9315-3.9323 | | N/A | N/A |
| Valve Stem Diameter | 0.3722-0.3732 | | | | |
| Main Bearings Running Clearance | 0.002-0.004 | | | | |
| Rod Bearings Running Clearance | 0.0015-0.0025 | 0.002-0.004 | | | |
| Crankshaft End Play | 0.002-0.010 | | | | |
| Camshaft End Play | 0.010 -0.020 | | | 0.002 -0.006 | |
| Cooling System—Quarts | 14 | 14 | 14 | 9 | 9½ |
| Crankcase—Quarts (With Filter) | 8 | 8 | 8 | 6½ | 6½ |
| Transmission—Quarts (Includes Differential & Hydraulic System) | 24 | 24 | 43(5) | 24 | 24 |
| Final Drive, Each—Pints | 4¾ | 4¾ | 4¾ | 2½ | 4¾ |
| Steering Gear—Pints | 2½ | 2½ | 6 | 2½ | 2½ |
| Power Steering System | N/A | N/A | N/A | N/A | N/A |
| Fuel Injection Pump—Pints | .... | .... | ¾ | .... | .... |

N/A Indicates information not available at time of publication.

(1) At cranking speed of 160 RPM.

(2) At cranking speed of 240 RPM.

(3) When equipped with later type camshaft (see paragraphs 37 and 38), adjust intake valve gap to 0.010 and exhaust valve gap to 0.007.

(4) Model 449001 indicates dual clutch (livedrive); single clutch (non-livedrive) engine model number is 449002.

(5) Capacity was changed from 38 quarts on early models by lengthening dipstick sleeve to raise dipstick; on models prior to Serial No. 705026, install new dipstick sleeve, part No. 923725.

# FRONT AXLE

## FRONT WHEEL BEARINGS

### All Models

1. Typical front wheel spindle, wheel hub and bearing assembly is shown in Fig. 1.

The tapered roller inner and outer bearings are the same size on some models; however, if bearings are to be reused, they should be reinstalled with mating bearing cones and cups together.

Note that lip of grease seal is installed away from inner bearing. It is recommended that bearings be lubricated with a pressure gun until grease is forced out past seal lip after each 60 hours of operation.

When adjusting wheel bearings, tighten nut to provide 0.003 end play to 0.002 pre-load, then install cotter pin.

## SPINDLES

### All Models

2. **R&R SPINDLES.** To remove front spindle (1—Fig. 2 or 3), support front of tractor and remove wheel, cap screw (11) and washer (10); then pull steering arm (9) from spindle. Withdraw spindle and remove "O" ring (2) and thrust washer (5); on model 1200, also remove thrust bearing (4—Fig. 3). On all models, remove "O" ring (8—Fig. 2 or 3). Reinstall by reversing removal procedure and tighten steering arm retaining cap screw to a torque of 120 Ft.-Lbs.

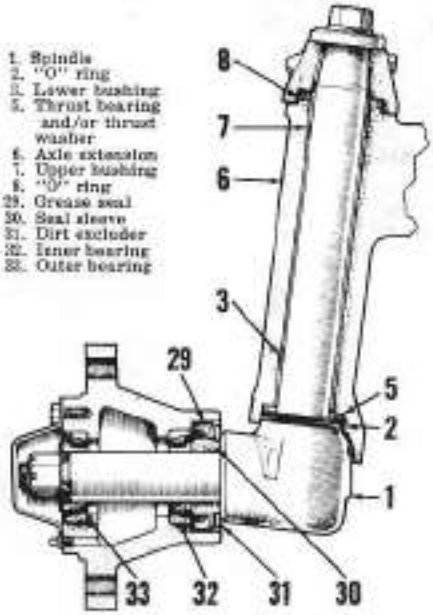


**Fig. 1 — Cross-sectional view of typical front wheel spindle, hub and bearing assembly. Note that lip of seal (29) is installed out (away from inner bearing).**

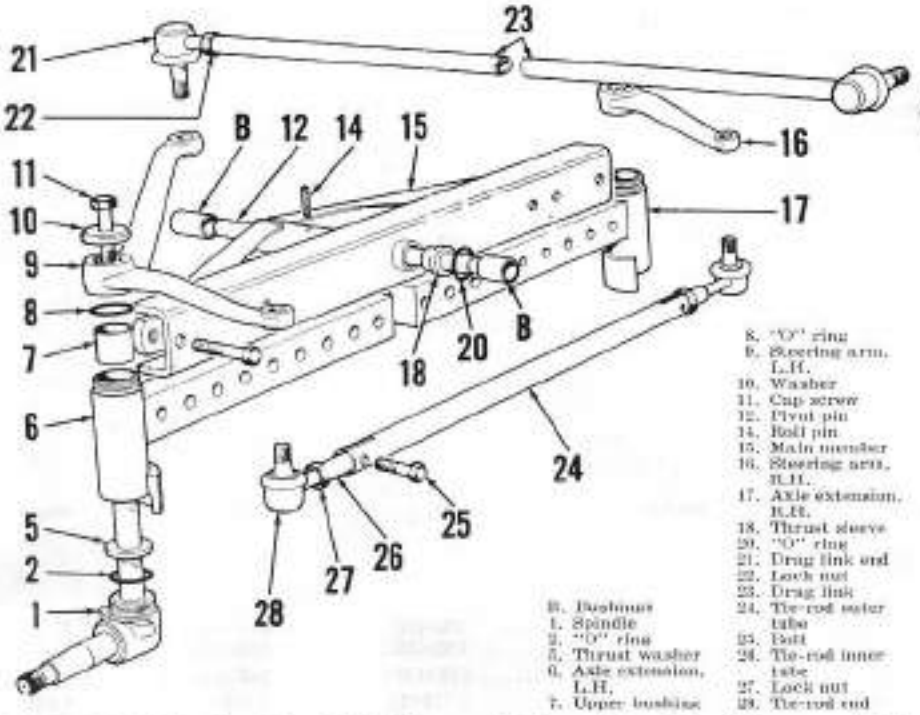


**Fig. 2 — Exploded view of model 770 front axle. Pivot pin bushings (B) are carried in main frame and front support casting.**

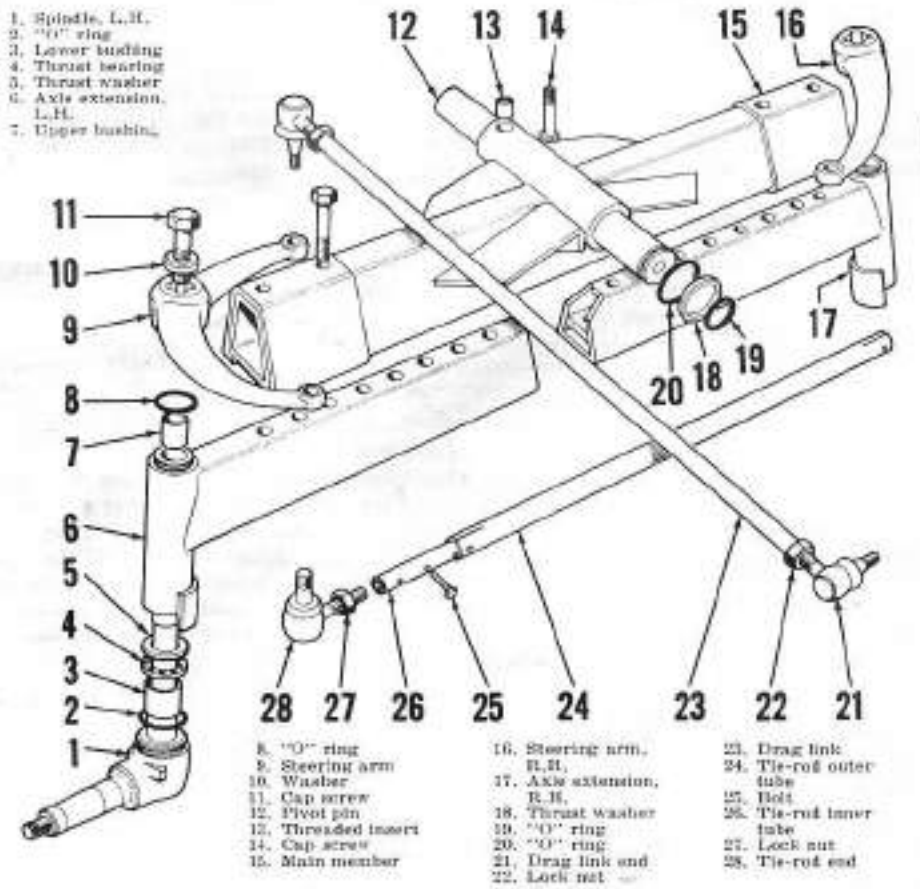


**Fig. 3 — Exploded view of model 1200 front axle. Models 880 and 990 (except model 990 heavy duty axle) are similar.**

3. **SPINDLE BUSHINGS.** After removing spindle, remove bushing (3 and 7—Fig. 2 or 3) using suitable drift punch. New bushings are pre-sized and should not require reaming if carefully installed. Outer ends of

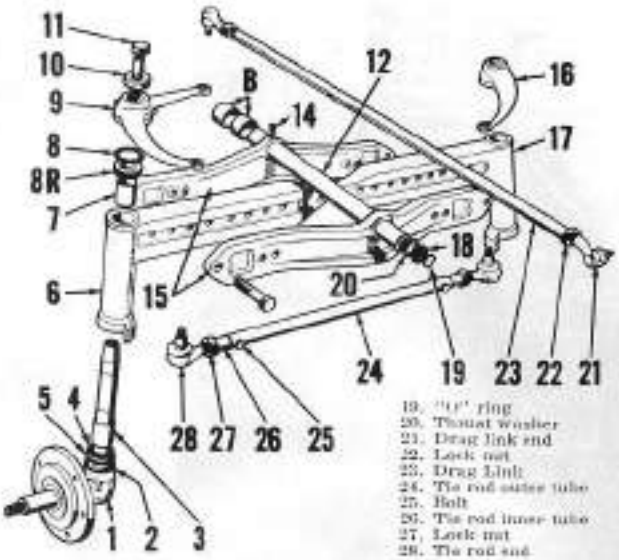


**Fig. 4 — Exploded view of model 990 heavy duty front axle. Extensions (6 and 17) are clamped between the main (center) members (15) and the assembly is pre-loaded by variable thickness thrust washers (20) to prevent front to rear movement on pivot pin.**

B. Bushings
1. Spindle
2. "O" ring
3. Lower bushing
4. Thrust bearing
5. Thrust washer
6. Axle extension, L.H.
7. Upper bushing
8. "O" ring
8R. Retainer
9. Steering arm, L.H.
10. Washer
11. Cap screw
12. Pivot pin
14. Bolt
15. Main member
16. Steering arm, R.H.
17. Axle extension, R.H.
18. Seal ring
19. "O" ring
20. Thrust washer
21. Drag link end
22. Lock nut
23. Drag Link
24. Tie rod outer tube
25. Bolt
26. Tie rod inner tube
27. Lock nut
28. Tie rod end

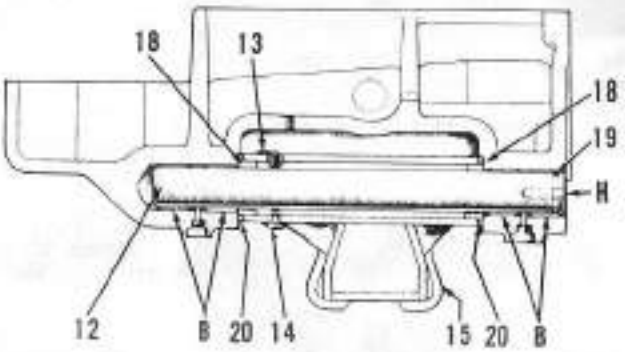


**Fig. 5 — Cross-sectional view of front support showing pivot pin installation typical of models 880, 990 and 1200. A tapped hole (H) is provided so that pin can be removed with slide hammer. Bolt (14) on model 990 with heavy duty front axle is located on top side of front center member.**

B. Bushings
H. Tapped hole
12. Pivot pin
13. Threaded insert
14. Pivot pin retaining bolt
15. Axle main member
18. Thrust sleeves
19. "O" rings
20. "O" rings

bushings should be flush with axle extension. Upper and lower bushings are alike except on model 1200.

## TIE-RODS AND TOE-IN

### All Models

4. Refer to Fig. 2 or Fig. 3. Toe-in of front wheels should be 1/16 to ⅛ inch and can be adjusted by lengthening or shortening the tie-rod.

Tie-rod end sockets (28) are non-adjustable automotive type and must be renewed as a unit.

## AXLE CENTER (MAIN) MEMBER AND PIVOT PIN

### Models 770, 780 and 3800

6. To renew the axle center member, support front of tractor and remove the axle extensions and front wheel units. Remove the spring pin (14—Fig. 2). Remove expansion plug from front support casting and remove pivot pin with slide hammer threaded into front end of pin.

Remove old bushings (B) and install new bushings using suitable driver. New bushings are pre-sized and should not require reaming if carefully installed. Install long bushing at front and short bushing at rear. Renew sealing "O" rings (20), thrust washers (18) and expansion plug at front end of pin.

### Models 880, 990, 1200 and 4600

7. To remove axle center (main) member and/or axle pivot pin, the tractor must first be split between front support and main (engine) frame. Remove hood, and drain cooling system. Disconnect radiator hoses, battery cable and air cleaner hose at rear side of radiator. On models with crankshaft driven hydraulic pump, disconnect pump pressure and suction lines from pump and extract a retaining "O" ring from one shaft coupling. Support tractor under engine and attach hoist to front unit. Unbolt front support from main frame and roll front unit away from tractor.

Remove cap screw (14—Fig. 3 or 4) and using slide hammer, withdraw pivot pin rearward from front support and axle center member. Raise front support with hoist until it clears axle assembly and remove the two thrust washer sleeves and the three sealing "O" rings.

The two rear bushings (B—Fig. 5) may be removed with suitable driver. To remove the two front bushings from blind hole, use a cape chisel and pliers. Drive new forward front bushing into blind hole until it bottoms or is forward of lubrication hole, then drive second front bushing in flush with support casting. Drive rear bushings into support from each side until bushings are flush with support casting. Bushings are pre-sized and should not require reaming if carefully installed. Be sure pivot pin is a free fit in bushings before reinstalling front axle to front support.

When reassembling model 990 with heavy duty forged front axle, the assembly must be pre-loaded as follows: Position axle assembly in front support casting and place a ¼-inch thick thrust washer and sealing ring at rear. Insert pivot pin through rear bushings, thrust washer and into axle center member, then pry center member rearward and select thickest thrust washer that will fit between front side of axle and front support casting. Install this thrust washer with sealing ring and install sealing ring on rear end of pivot pin. Install cap screw. Thrust washers are available in seven thicknesses from 15/64 to ¾-inch.

On models with fabricated (welded) front axle assembly, axle front to rear float in front support should be 0.002-0.014. Renew the pivot thrust washers (18—Fig. 3) if front to rear float is excessive.

When rejoining front support to main frame, tighten bolts to a torque of 45 Ft.-Lbs. on models 880, 990 and 4600, and to 75 Ft.-Lbs. on model 1200. On models so equipped, bleed front mounted hydraulic pump as outlined in paragraph 234.

## FRONT SUPPORT

### Models 770, 780 and 3800

8. The front support is an integral part of the main frame casting. To renew the main frame, first remove engine as outlined in paragraph 24. Remove air cleaner and support assembly, battery and battery tray. Remove front axle pivot pin as outlined in paragraph 6, then unbolt and remove main frame from transmission housing. When reassembling, tighten main frame to transmission bolts to a torque of 45 Ft.-Lbs.

### Models 880, 990, 1200 and 4600

9. To renew the front support casting, proceed as outlined in paragraph 7 and also remove radiator, air cleaner, battery and battery tray and, on models so equipped, remove front mounted hydraulic pump and bracket assembly.

# STEERING GEAR

## REMOVE AND REINSTALL

### Models 770, 780, 880, 990, 3800 and 4600

10. To remove steering gear, proceed as follows: Remove lever from lower end of hand throttle lever shaft and withdraw throttle lever shaft from dash (instrument) panel after unscrewing Nylock nut on shaft at underside of panel. Disconnect rear end of steering drag link from steering gear arm, then unbolt and remove steering gear box from transmission top cover.

The oil sump for steering gear is in the transmission top cover and because there is no filler plug, sump must be filled prior to reinstalling gear unit.

On later models, steering gear unit is located to transmission top cover by two hollow dowel rings at two bolting points. If installing new type gear box on earlier model, transmission top cover must be modified by counterboring two bolt holes for dowel ring location to correspond with the two dowel locations in new steering gear box. Dimensions for counterbored holes in transmission cover are 0.5312-0.5326 diameter and ¼-inch deep. It will also be necessary to shorten the two cap screws to a length of 2⅛ inches or to install new cap screws.

### Model 1200

11. To remove steering gear unit, first remove engine hood, then proceed as follows: Disconnect hourmeter cable, throttle linkage and wiring to the instrument panel. Unbolt throttle lever shaft bracket from steering gear housing, then unbolt and remove fuel tank and instrument panel as a unit. Remove exhaust brake pedal bracket and engine stop cable bracket from steering gear housing. Refer to Fig. 6 and drain the steering gear lubricant by removing plug (A). Then, unbolt and remove the steering gear assembly from transmission cover.

When reinstalling steering gear unit, tighten bolts to a torque of 75 Ft.-Lbs. Fill steering gear to level of filler plug (C—Fig. 7) with proper lubricant.

## OVERHAUL STEERING GEAR

### All Models

12. Refer to exploded view of typical steering column assembly in Fig. 8, remove acorn nut and pull steering wheel from steering shaft. Remove steering wheel key and straighten tabs of washer (2), then remove nut (1) and tab washer and unscrew upper bearing race (4). Remove the twelve loose bearing balls (5).

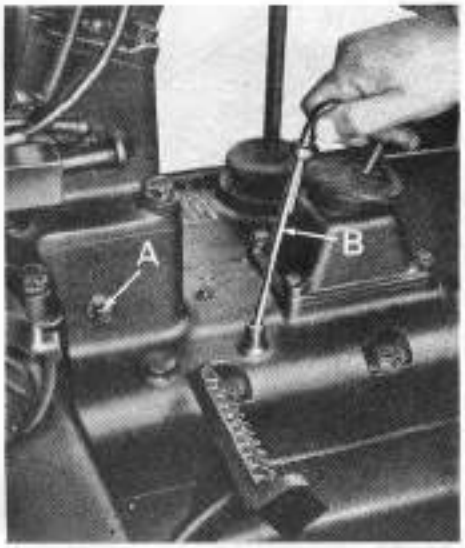


Fig. 6—On model 1200, remove drain plug (A) and drain oil from steering gear before removing assembly from transmission cover. Transmission oil level dipstick is (B).

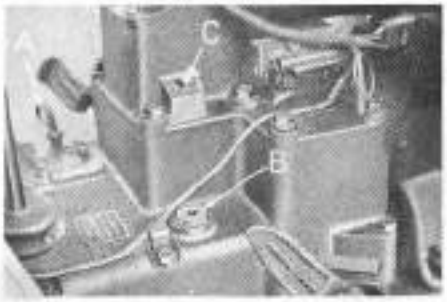


Fig. 7—On model 1200, steering gear filler and oil level plug is located at (C); on other models, fill steering gear cavity in transmission cover before reinstalling steering gear unit.

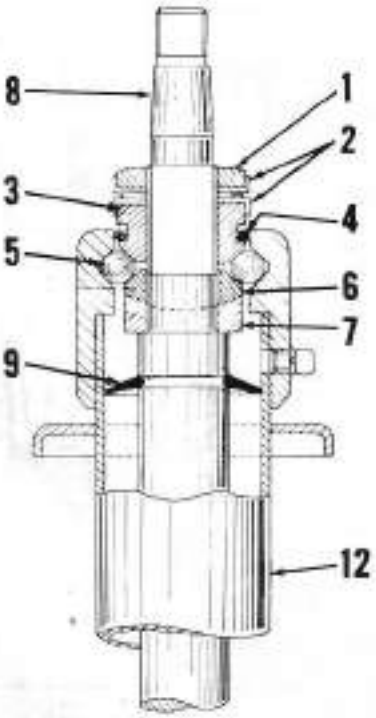


Fig. 9—Cross-sectional view showing steering shaft bearing and grease baffle installation. Refer to Fig. 8 for exploded view and legend.

Refer to Fig. 11 for models 770, 780 and 3800; to Fig. 12 for models 880, 990 and 4600; or to Fig. 13 for model 1200. Remove the four cap screws (27) and both pegs (29), then withdraw the steering shaft and ball nut assembly from bottom of unit. Lower bearing race (6—Fig. 8) and seat (7) can now be removed from steering column and baffle (9) from steering shaft. Unscrew the ball nut assembly (13) from shaft and retrieve the 28 loose steel balls (10).

On all models except 1200, remove

Fig. 8—Exploded view of typical steering column. Bearing lower race (6) pivots in spherical seat to allow front to rear movement of lower end of steering shaft as rocker arm (31—Fig. 11, 12 or 13) swings through arc.

1. Lock nut
2. Lock tab washer
3. Upper bearing race
4. "O" ring
5. Bearing balls (12)
6. Lower bearing race
7. Spherical seat
8. Steering shaft
9. Rubber baffle
10. Recirculating balls (28)
11. Ball tube
12. Steering column
13. Ball nut assembly

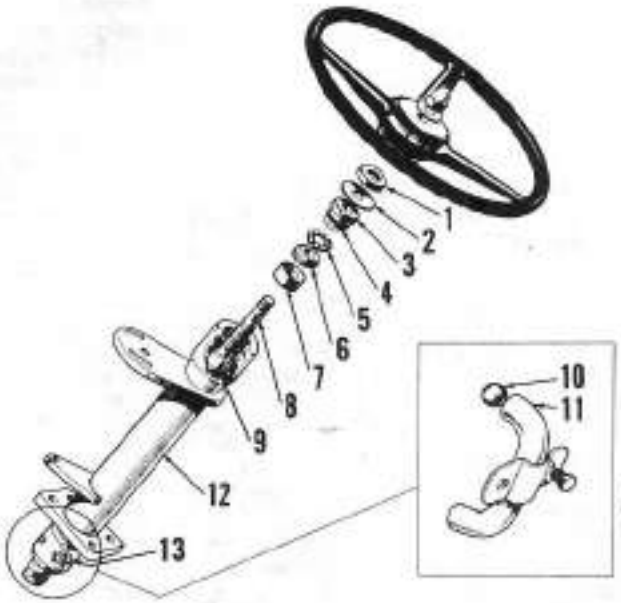

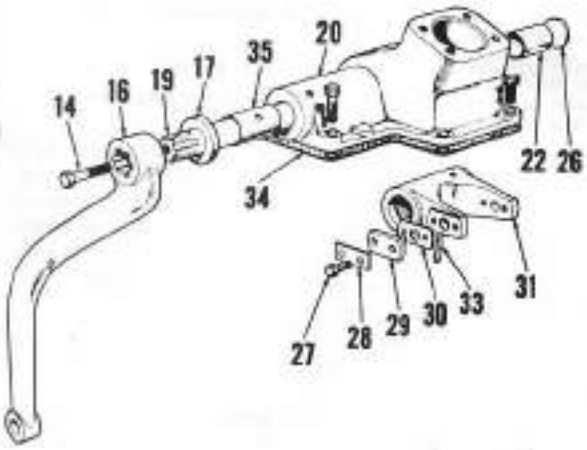


**Fig. 11 — Exploded view of model 770 steering gear housing, cross shaft and steering (drop) arm. Shims (30) are provided to adjust ball nut peg (29) preload against ball nut.**

14. Cap screw
16. Steering arm
17. Oil seal (early models)
19. Cross shaft
20. Housing
22. Bushing (short)
26. Expansion plug
27. Cap screws
28. Lock plate
29. Ball nut pegs
30. Shims
31. Rocker arm
33. Cotter pin
34. Gasket
35. Bushing (long)

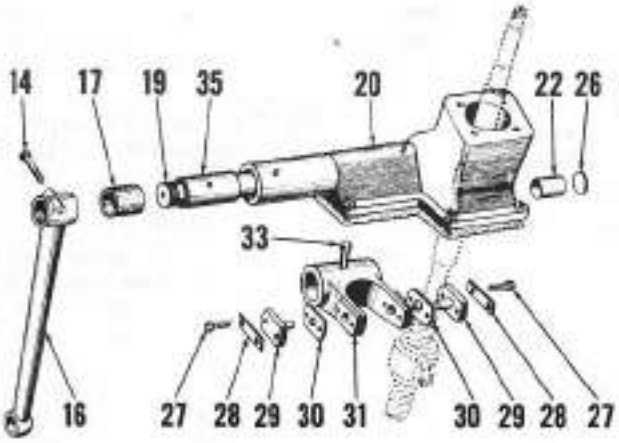


**Fig. 12 — Exploded view of steering gear housing, cross shaft and steering arm assembly used on models 880 and 990.**

14. Clamp bolt
16. Steering arm
17. Dust seal
19. Cross shaft
20. Housing
22. Bushing (small dia.)
26. Expansion plug
27. Cap screws
28. Lock plates
29. Ball nut pegs
30. Shims
31. Rocker arm
33. Cotter pin

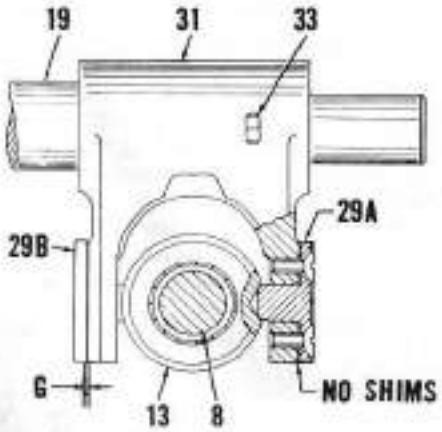


**Fig. 14 — View showing method of selecting shims for ball nut peg preload. Refer to text for procedure and to Fig. 11, 12 or 13 for legend.**

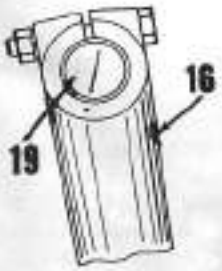


**Fig. 15 — When installing steering arm on model 880 or 990, be sure that punch mark on steering arm (16) is aligned with chisel mark on cross shaft (19).**

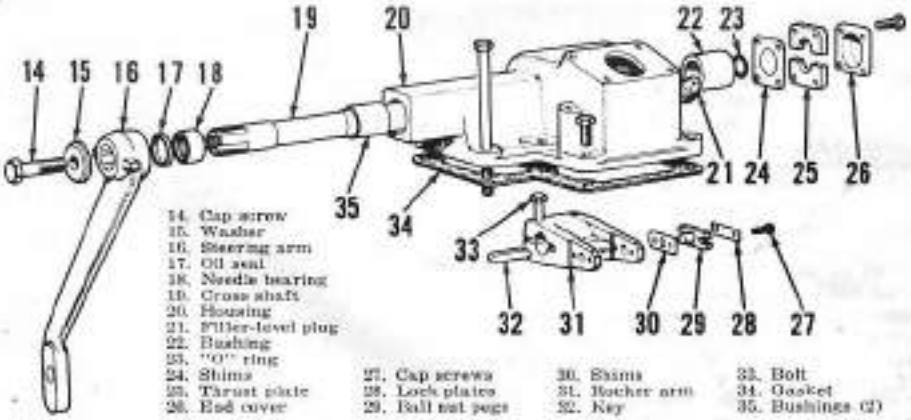


14. Cap screw
15. Washer
16. Steering arm
17. Oil seal
18. Needle bearing
19. Cross shaft
20. Housing
21. Filler-level plug
22. Bushing
23. "O" ring
24. Shims
25. Thrust plate
26. End cover
27. Cap screws
28. Lock plates
29. Ball nut pegs
30. Shims
31. Rocker arm
32. Key
33. Bolt
34. Gasket
35. Bushings (2)

**Fig. 13 — Exploded view of model 1200 steering gear housing, cross shaft and steering arm. Shims (24) are used to center rocker arm only and do not control cross shaft end play.**

cotter pin (33—Fig. 11 or 12) and withdraw cross shaft (19) and drop arm (16) as a unit. On model 1200, refer to Fig. 13 and remove end cover (26), split thrust plate (25), shims (24) and bolt (33). Withdraw cross shaft and steering arm. Be careful not to lose any of the shims (24).

If cross shaft bushings are to be renewed, be sure to note their size and location so new ones can be installed properly.

On all models except 1200, be sure that lubrication holes in bushings and gearbox are aligned. Cross shaft must not bind in installed bushings.

To reassemble, remove ball nut tube (11—Fig. 8) from ball nut (13) and place nut over ball track on lower end of steering shaft. Insert steel balls into nut until track is filled; removing oil from all parts and turning steering shaft back and forth will aid in filling the track. Stick remainder of steel balls into tube (11) with grease and fit tube to nut. Place rubber baffle in groove on steering shaft and insert shaft up through housing.

Position rocker arm in gear housing with stop down. Reinstall cross shaft and secure with cotter pin (all models except 1200) or bolt (model 1200). On model 1200, install "O" ring, shims, split thrust plate and end cover and vary the shims as necessary to center rocker arm in the housing. Shims are available in thicknesses of 0.003, 0.005, 0.010 and 0.030.

Install one ball nut peg (29A—Fig. 14) without shims and tighten the two cap screws securely. Install second ball nut peg (29B) without shims and tighten the two cap screws evenly until inner end of peg binds ball nut lightly. Using a feeler gage, measure gap (G) between ball nut peg (29B) and rocker arm (31). The shims to be used in final assembly should be 0.001 to 0.003 less than measured gap (G) and divided equally as possible for installation under each ball nut peg. The shims are available in thicknesses of 0.003, 0.005, 0.007 and 0.010. After the ball nut pegs are reinstalled with proper number of shims, tighten the four cap screws securely and bend lock tabs (28—Fig. 11, 12 or 13)

against the cap screw heads. On model 880, 990 or 4600, install drop arm as shown in Fig. 15.

Insert spherical seat (7—Fig. 9) with flat face down, then install lower race (6) with round face in spherical seat. With bearing race positioned just below groove in steering column, drop in the ten loose bearing balls (5). Install new "O" ring in groove on upper race (3), then thread upper race onto steering shaft so as to remove all play from bearing, yet allow shaft to turn freely. Install lock tab washer (2) and lock nut (1), then bend tabs of washer against lock nut and upper bearing race.

### DRAG LINK

#### All Models

13. Drag link ends are of the non-adjustable automotive type and must be renewed as a complete unit.

Adjust length of drag link if steering gear internal stop contacts before spindle contacts stop on axle extension.

# POWER STEERING

The power steering system is of the power assist type and utilizes the standard manual steering gear which allows the operator to steer tractor manually should loss of power occur.

### FLUID AND BLEEDING

#### All Models

14. To bleed the system, turn front wheels to right against stop. Fill reservoir to "full" mark on dipstick with a good quality SAE 10W oil or with Type "A" automatic transmission fluid. Start engine and run at a fast idle; then, turn front wheels full left and full right while observing fluid in reservoir. Continue turning wheels from side to side until fluid in reservoir is free of bubbles and excess turbulence, then turn wheels to straight ahead position and refill reservoir to "full" mark on dipstick.

### SYSTEM OPERATING PRESSURE

#### All Models

15. A pressure test of the power steering circuit will disclose whether the pump, relief valve or some other unit in the system is malfunctioning. To check system pressure, proceed as follows:

Connect a pressure test gage and shut-off valve in series with the pump pressure line and be sure the pressure gage is connected in the circuit between the shut-off valve and pump. Open the shut-off valve and bleed the system as in paragraph 14. Operate engine at slow idle speed until fluid is at normal operating temperature. Then, with engine running at fast idle speed, close the shut-off valve and retain in closed position only long enough to observe pressure gage reading which should be as follows:

| Tractor Model | Normal Pressure |
|---|---|
| 770-780-3800 | 600 |
| 880-4600 | 700 |
| 990 | 900 |
| 1200 | 1000 |

NOTE: Pump may be seriously damaged if valve is left in closed position for more than a few seconds. If gage reading is within 40 psi of normal system pressure with shut-off valve fully closed, pump and relief valve are OK and any trouble is located in the steering cylinder and control valve.

If gage pressure is excessively high, relief valve is probably stuck in closed position or incorrectly installed (turned end for end) in valve bore. If gage pressure is more than 40 psi below normal system pressure, adjustment shims should be added in the model 1200 pump, or a new relief valve assembly should be installed in the roller vane type pump. If gage pressure still remains low, pump should be overhauled.

### R&R PUMP

#### Model 990 with Integral Pump and Reservoir

16. Disconnect return line from steering cylinder, remove reservoir filler cap and allow reservoir to drain. Disconnect pressure line from cylinder, unbolt pump adapter plate from engine and remove the pump, reservoir and hoses. Clean outside of pump and remove hoses. Refer to paragraph 19 for disassembly and overhaul procedures.

To reinstall pump, reverse removal procedure, then fill and bleed the system as outlined in paragraph 14. Note that pressure hose is connected to cylinder port containing check valve spring and ball.

#### Model 1200 and Model 990 with Separate Pump and Reservoir

17. Disconnect return hose at power steering cylinder and remove reservoir filler cap to allow reservoir to drain. Clean outside of pump and connections, then disconnect by-pass line, supply hose and pressure tube from pump. Unbolt and remove pump from engine.

Reinstall pump by reversing removal procedure, and fill and bleed the system as outlined in paragraph 14.

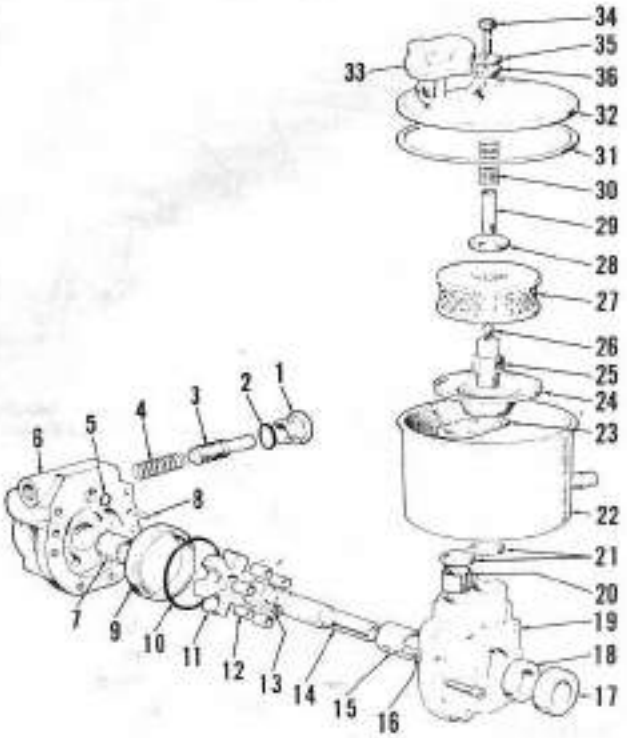


**Fig. 19 — Exploded view of power steering pump and reservoir assembly used on early model 990; refer to Fig. 23 for late model 990. Fluid by-passed by the flow control valve (3) is returned through the reservoir mounting stud (25) lifting the check ball (26) off of its seat and is filtered before entering the reservoir. The check valve prevents unfiltered fluid returned from the steering cylinder to enter the pump. Other models with vane type pump are similar except the fluid reservoir is separately mounted and the fluid by-passed by valve (3) returns directly to intake side of pump.**

1. Cap
2. "O" ring
3. Flow control & pressure relief valve
4. Flow control valve spring
5. "O" ring
6. Pump body
7. Bushing
8. Locating pin
9. Cam ring
10. "O" ring
11. Rotor
12. Roller vanes
13. Drive pin
14. Pump shaft
15. Bushing
16. Dowel pin
17. Sealed bearing
18. Oil seal
19. Pump cover
20. Retainer
21. "O" rings
22. Reservoir
23. Reinforcement plate
24. Filter base
25. Reservoir mounting stud
26. Check ball
27. Fluid filter element
28. Filter cap
29. Cover mounting stud
30. Spring
31. Gasket
32. Reservoir cover
33. Filler cap & dipstick
34. Cover cap screw
35. Washer
36. Grommet

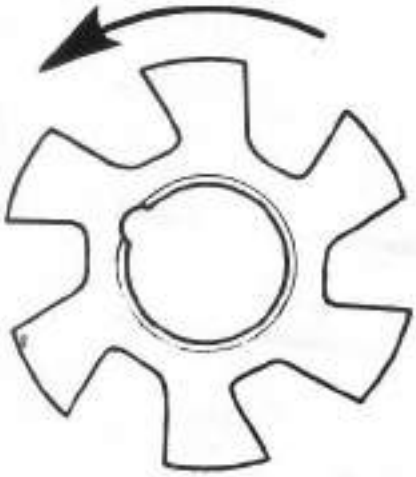

Fig. 22 — When reinstalling pump rotor, be sure it is installed so that it will turn in direction indicated by arrow.

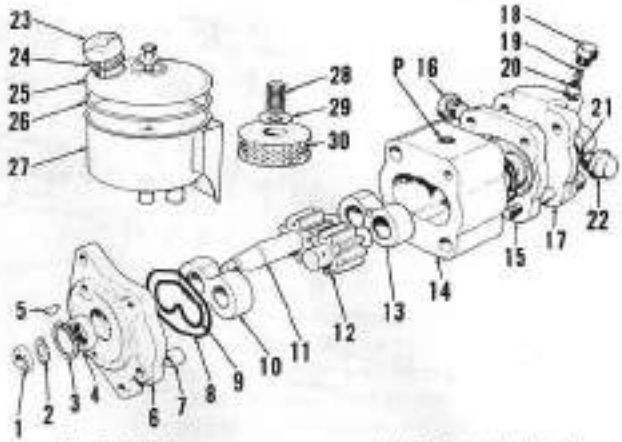


Fig. 23 — Exploded view of model 1200 and late model 990 powering steering pump and remote reservoir assembly. Note that pump is inverted from actual position when installed on tractor. Be sure that intake side of bearing blocks (10 and 13) are towards intake port (P) in pump body (14), and that relieved sides of blocks are towards each other. Pump drive gear (not shown) is retained by nut (1) and tab washer (2).

1. Nut
2. Tab washer
3. Snap ring
4. Oil seal
5. Drive gear key
6. Front cover
7. Hollow dowel (bolt ring)
8. Outer seal ring
9. Inner seal ring
10. Front bearing block
11. Pump shaft and drive gear
12. Idler gear
13. Rear bearing block
14. Pump body
15. Rear plate
16. Plug
17. Rear cover & valve assembly
18. Plug
19. Relief valve spring
20. Relief valve plunger
21. Flow control valve spring
22. Plug
23. Filler cap & dipstick
24. Gasket
25. Reservoir cover
26. Gasket
27. Reservoir
28. Spring
29. Filter cap
30. Filter element

### All Other Models

18. Loosen the bolts retaining pump mounting bracket to engine and on models without belt shield, remove pump drive belt. Remove drive pulley retaining cap screw and washer, then using suitable puller, remove pulley from pump shaft. CAUTION: Do not pry or drive on pulley. Disconnect reservoir to pump hose at pump and allow reservoir to drain. Disconnect pressure hose from pump and unbolt and remove pump from mounting bracket.

To reinstall pump, reverse removal procedure, then fill and bleed the system as outlined in paragraph 14. Pump drive belt should be adjusted by moving pump bracket in slotted holes to obtain a belt deflection of ¾-inch.

## OVERHAUL PUMP

### All Models Except 1200 and Model 990 with 4/49 Engine

19. With pump removed, refer to typical exploded view in Fig. 19 and proceed as follows:

On model 990, remove the cap screw and washer retaining drive gear to pump shaft, then using suitable puller, remove gear from shaft. CAUTION: Do not pry or drive gear from shaft. Unbolt and remove pump adapter bracket from pump body. Remove reservoir cover (32), lift out filter element (27) and unscrew mounting stud (25) with cover retaining stud (29). Remove reservoir (22), filter base (24) and reinforcement plate (23). Lift out seal retainer (20) and discard the "O" rings (21).

On other models, remove hollow cap screw and banjo fitting (not shown) from top of pump and discard sealing rings.

On all models, unscrew retainer cap (1) and remove flow control and pressure relief valve assembly (3) and spring (4): discard "O" ring (2). Remove cap screws retaining pump cover (19) to pump body (6) and carefully separate cover and shaft unit from body while holding pump in vertical position to prevent losing roller vanes from body. Remove rotor (11) and drive pin (13) from shaft and bump shaft and bearing (17) forward out of pump cover. Remove seal (18) from cover and remove cam ring (9) and locating pin (8) from body.

Carefully inspect all parts and renew any showing evidence of scoring or excessive wear. Bushings (7 & 15) are cataloged separately, although body and/or cover should be examined closely for wear or scoring on faces contacting the rotor and vanes before attempting to renew the bushings. Renew bearing (17) if rough or if the bearing shows loss of lubricant. Place rotor and vanes in pump body and check rotor and vane end clearance with feeler gage and straight edge; if clearance exceeds 0.002, rotor and vanes should be renewed. Renew pump body if end clearance of new rotor and vanes exceeds 0.002. Flow control valve spring tension should be 8 to 9 pounds when compressed to a length of 0.82 inch. The flow control and pressure relief valve (3) is serviced as an assembly only; renew the valve if scored or if relief valve is not functioning properly.

Using all new "O" rings, gaskets and seal, reassemble pump by reversing disassembly procedure. Rotor must be installed so that it will turn in direction indicated by arrow in Fig. 22. Make sure that notch in cam ring engages locating pin, that seal lip faces inward and that pump shaft can be turned without binding after pump is assembled. The socket head pump cover retaining cap screws should be tightened evenly to a torque of 18 Ft.-Lbs. Tighten flow control and pressure relief valve cap to a torque of 30 Ft.-Lbs.

On model 990, tighten reservoir mounting stud to a torque of 30 Ft.-Lbs. and tighten cover retaining cap screw to a torque of 5 Ft.-Lbs.

### Model 1200 and Model 990 with Separate Pump and Reservoir

20. Refer to exploded view of pump in Fig. 23 and disassemble pump as follows: Scribe an assembly mark across pump covers and body. Straighten tab on washer (2) and remove nut (1). Using a suitable puller, remove drive gear from pump shaft and remove key (5). Remove the four through bolts and separate rear cover assembly (17), plate (15), body (14) and front cover (6). Remove bearing blocks (10 & 13) and gears (11 & 12) from pump body as a unit. Remove plugs (16, 18 & 22) from cover (17) and withdraw flow control valve (not shown), pressure relief valve (20) and related parts. Remove snap ring (3) and oil seal (4) from front cover. Clean all parts in a suitable solvent, air dry, then lightly oil all machined surfaces.

Inspect bearing blocks (10 & 13) for signs of seizure or scoring on face of journals. (When disassembling bearing block and gear unit, keep parts in relative position to facilitate reassembly.) Light score marks on faces of bearing blocks can be removed by lapping block on a surface plate using grade "O" emery paper

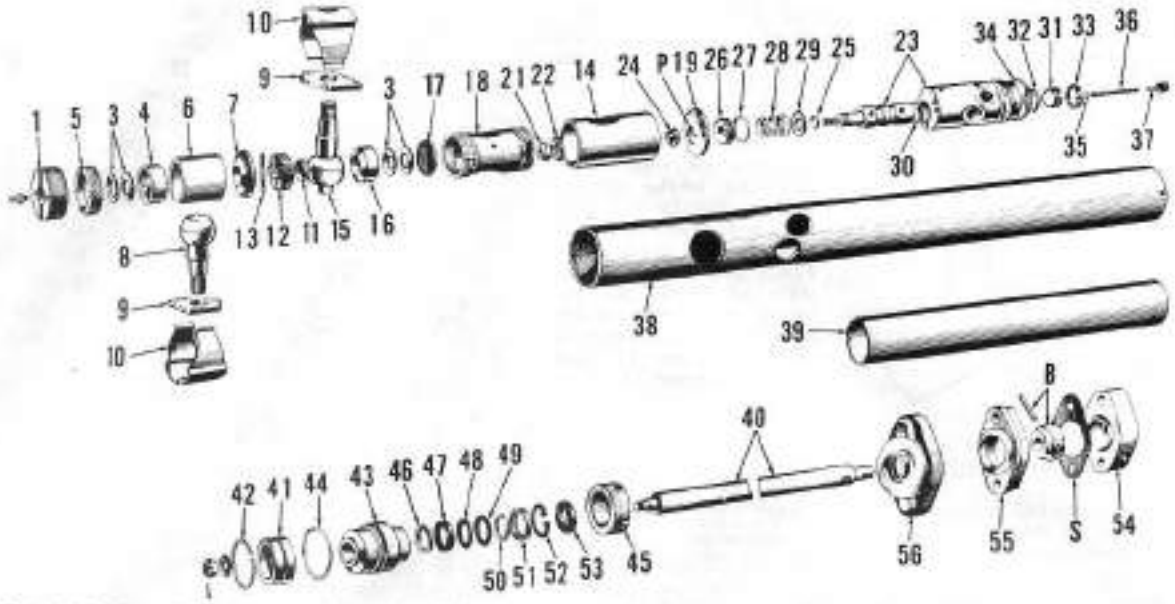


**Fig. 24 — Exploded view of reactive type (steering effort increases with system pressure) steering cylinder and control valve used on early model 880 and 990 tractors. Refer to Fig. 26 for later non-reactive type cylinder and control valve. Refer to Fig. 25 for cross-sectional view of unit and for legend.**

and kerosene. Examine body for wear in gear running track. If track is worn deeper than 0.0025 on inlet side, body must be renewed. Examine pump gears for excessive wear or damage on journals, faces or teeth. Runout across gear face to tooth edge should not exceed 0.001. If necessary, gear journals may be lightly polished with grade "O" emery paper to remove wear marks. Gear faces may be polished by sandwiching grade "O" emery paper between gear and face of scrap bearing block, then rotating gear. New gears are available in matched sets only.

Reassemble pump using all new seals, "O" rings and sealing rings. Insert new drive shaft oil seal in front plate and install locating snap ring. Install flow control valve, spring (21), and plugs (16 & 22) with new "O" rings. Install pressure relief valve (20), spring (19) and plug (18), being sure that all shims are in plug and install new "O" ring on plug. Assemble pump gears in bearing blocks and insert the assembly into pump body. Be sure the two bolt rings (7) are in place in pump body, then position front cover on body. Place rear plate (15) at rear of body, then install rear cover assembly. Tighten the four cap screws to a torque of 13-17 Ft.-Lbs. Install the pump drive gear with key, tab washer and nut. Tighten nut to a torque of 55-60 Ft.-Lbs. and bend tab of washer against flat on nut.

## R&R STEERING CYLINDER
### All Models

21. Disconnect hoses from cylinder and allow fluid to drain from reservoir. Disconnect drag link from control valve actuating ball stud and disconnect front ball stud from steering arm on front wheel spindle. Unbolt piston rod ball cap from bracket on tractor frame taking care not to lose shims from between cap and ball seat. Then, remove cylinder from tractor.

When reinstalling, reconnect piston rod ball end with sufficient shims between ball cap and ball seat to prevent anchor ball from binding, yet be without end play, when the retaining bolts are tightened to a torque of 45 Ft.-Lbs. Tighten ball stud nuts securely and retain with cotter pins. Connect pressure hose to port in which check valve spring and ball are visible and connect return hose to remaining port. Fill and bleed the system as outlined in paragraph 14.

## OVERHAUL STEERING CYLINDER
### All Models

22. Refer to Fig. 24 for exploded

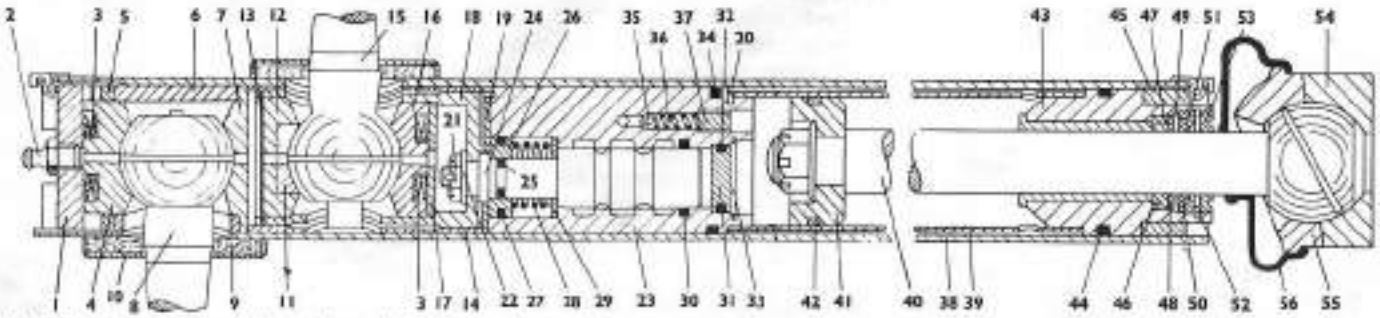


**Fig. 25—Cross-sectional view of reactive type steering cylinder and control valve assembly used on early model 880 and 990 tractors. Refer to Fig. 24 for exploded view of unit.**

1. Front plug
2. Grease fitting
3. Belleville washers
4. Outer ball cup
5. Lock ring
6. Ball cup spacer
7. Inner ball cup
8. Power ball stud
9. Grease retainer
10. Spring retainer
11. Ball cup
12. Ball cup holder
13. Spring clip
14. Locating sleeve
15. Manual ball stud
16. Ball cup
17. Backing washer
18. Operating sleeve
19. Spacer
20. Locating pin
21. Nut
22. Hardened washer
23. Valve body & spool
24. Collar
25. "O" ring
26. Reaction ring
27. "O" ring
28. Reaction (centering) spring
29. Reaction washer
30. "O" ring
31. End cover
32. "O" ring
33. Snap ring
34. "O" ring
35. Manual steering relief valve
36. Relief valve spring
37. Plug
38. Outer cylinder tube
39. Inner cylinder tube
40. Piston rod and ball
41. Piston
42. Piston ring
43. Bearing & seal retainer
44. "O" ring
45. Locking ring
46. Gland spacer
47. Gland ring
48. Vellumoid washer
49. Metal washer
50. Scraper ring
51. Scraper housing
52. Snap ring
53. Lip scraper
54. Outer ball cup
55. Inner ball cup
56. Rubber cover

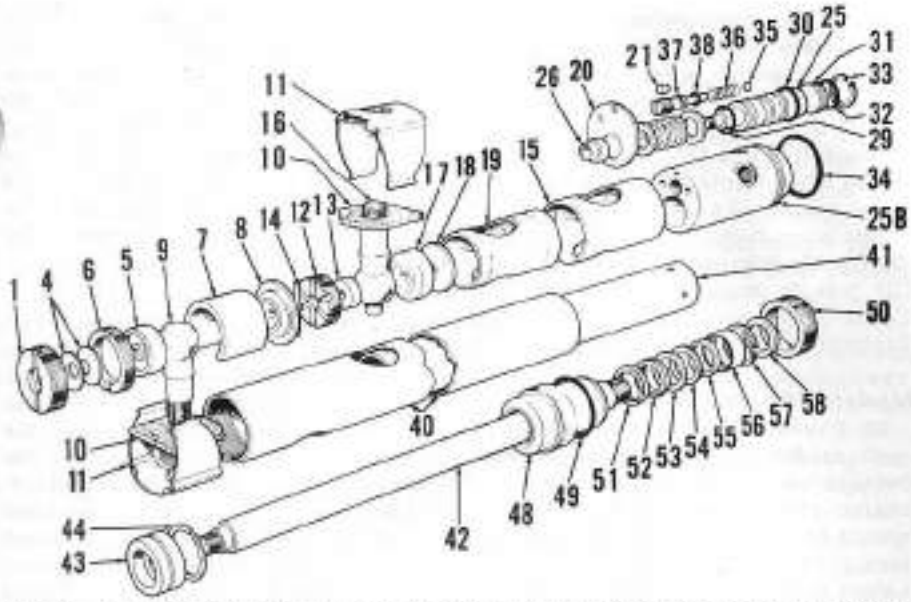


**Fig. 26 — Exploded view of non-reactive type power steering cylinder typical of that used on later model 880 and 990 tractors and all other models included in this manual. Refer to Fig. 27 for cross-sectional view of unit and for legend.**

view of the reactive type cylinder and control valve used on early model 880 and model 990 tractors. Fig. 26 shows an exploded view of the non-reactive type cylinder used on all other models. Cylinder diameter and length will vary with different model tractors, although design and service procedures remain the same.

To disassemble the unit, clamp outer tube lightly in vise at control valve section of tube and unscrew front plug. Remove the two spring washers and steering arm ball stud cup, then unscrew the lock ring and remove sleeve, ball stud and ball stud seat. Extract the spring clip retaining the manual ball stud plug, unscrew the plug and remove the manual ball stud.

Unscrew the bearing retainer from piston rod end of cylinder tube and withdraw piston and piston rod assembly from tube. Remove piston retaining nut and piston from rod, then slide bearing assembly off inner end of piston rod. Remove scraper ring and snap ring from outer end of bearing and remove the seal unit from bearing and "O" ring from outside of bearing.

With a wood dowel inserted through front end of cylinder tube against manual ball stud rear cup, drive the control valve assembly and cylinder inner tube from rear end of cylinder outer tube. Separate inner tube from control valve assembly; on larger cylinders, a spacer collar is used between inner tube and valve body. Pull control valve sleeve and valve spool from valve body and remove nut from front end of valve spool to disassemble this unit. Remove by-pass check valve plug, spring and valve from control valve body.

Carefully clean and inspect all parts for scoring, undue wear or other damage. Remove any burrs with crocus cloth. Be sure not to remove any sharp edges from lands on control valve spool. Renew any parts which are questionable and using all new seals and "O" rings, reassemble as follows:

23. Lubricate all parts and "O" rings and reassemble by reversing disassembly procedure, observing the following: Assemble parts into component units as they were removed from the cylinder tube. Tighten piston retaining nut to a torque of 40 Ft.-Lbs. Be careful not to damage "O" rings on valve body and bearing as they are installed past threads inside the outer tube. Screw the piston rod bearing retainer in until hose ports on control valve body are aligned with holes in outer tube, then install components in front end of tube. Spring washers are installed in pairs with convex (rounded out) side together. Tighten lock ring to clamp all units together, then install ball stud cup, spring washers and front end plug. Turn front end plug in tight, then back out ¼-turn and secure with cotter pin.

1. Front plug
2. Grease fitting
3. Cotter pin
4. Belleville washers
5. Outer ball cup
6. Lock ring
7. Ball cup spacer
8. Inner ball cup
9. Power ball stud
10. Grease retainer pad
11. Spring retainer cover
12. Ball cup holder
13. Ball cup
14. Spring clip
15. Locating sleeve
16. Manual ball stud
17. Ball cup
18. Backing washer
19. Operating sleeve
20. Spacer
21. Locating pin
22. Nut
23. Cotter pin
24. Hardened washer
25. Valve body & spool
26. Spool collar
27. Reaction (centering) spring
28. Reaction washer
29. "O" ring
30. "O" ring
31. End cover
32. "O" ring
33. Snap ring
34. "O" ring
35. Manual steering relief valve

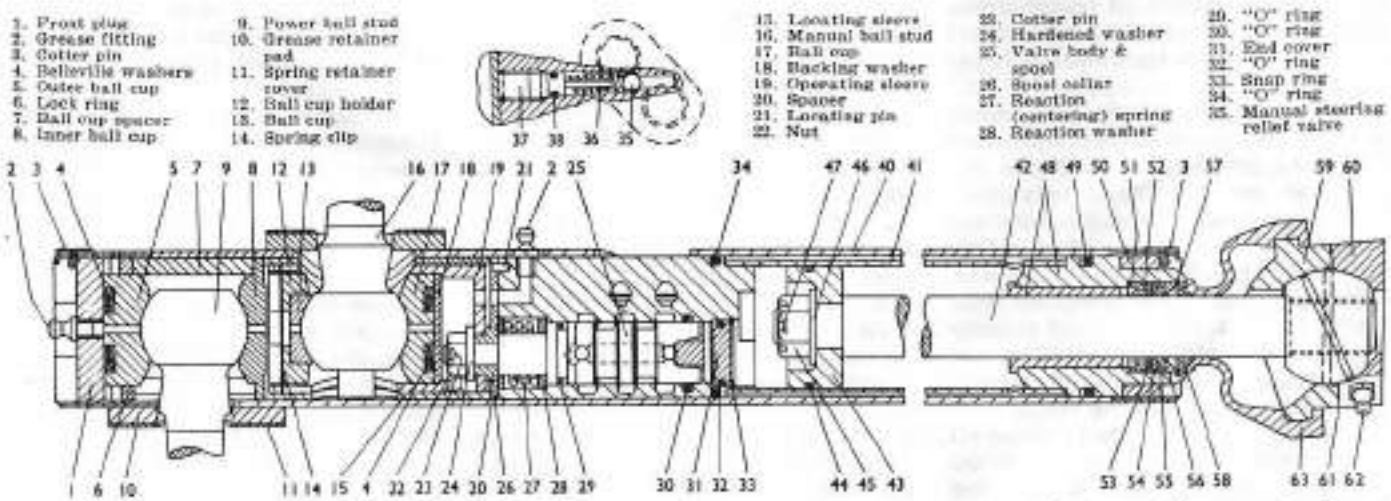


**Fig. 27—Cross-sectional view of non-reactive type power steering cylinder typical of that used on all tractors with power steering except early models 880 and 990. Cross-sectional view of manual steering relief valve is shown above the cylinder. The relief valve allows oil to circulate within the cylinder when steering tractor with engine not running or if pump is inoperative. Refer to Fig. 26 for exploded view of unit.**

36. Relief valve spring
37. Plug
38. "O" ring
40. Outer cylinder tube
41. Inner cylinder tube
42. Piston rod and ball
43. Piston
44. Piston ring
45. Nut
46. Washer
47. Cotter pin
48. Bearing & seal retainer
49. "O" ring
50. Locking ring
51. Seal spreader
52. Gland ring
53. Vulkanoid washer
54. Metal washer
55. Scraper ring
56. Scraper ring housing
57. Snap ring
58. Lip scraper
59. Inner ball cup
60. Outer ball cup
61. Shims (0.002, 0.005 & 0.010)
62. Grease fitting
63. Rubber cover

# ENGINE

## R&R ENGINE ASSEMBLY

### Models 770, 780 and 3800

24. To remove the engine and clutch as an assembly, proceed as follows:

On models equipped with dual (live PTO) clutch ("Livedrive" models), first drain the transmission, remove the power take-off assembly as outlined in paragraph 192 and remove the PTO drive ("cardan") shaft. If equipped with power steering, unbolt and remove pump, leaving lines connected.

On all models, remove hood, drain cooling system and if desired to reduce weight, drain fuel tank. Disconnect battery cables and remove radiator. On models 770 and 780, disconnect fuel return pipe from upper side of fuel tank. On all models, disconnect hourmeter cable, instrument panel wiring, engine throttle and stop controls, then remove the fuel tank and instrument panel as an assembly. Disconnect drag link, then unbolt and remove steering gear assembly.

Remove cover from bottom of clutch housing and remove the two figure-eight springs retaining clutch release fork to release bearing. Remove the starter assembly. Unbolt and remove transmission cover. NOTE: One of the transmission cover bolts is located inside the steering box cavity in transmission cover. Disengage snap ring from groove in driveshaft so that the muff (internal splined) coupling can be moved forward until it is clear of transmisssion input shaft. Unbolt driveshaft bearing support from transmission housing.

Remove engine oil pan and unbolt engine from front frame. Note that five bolts are located inside the engine and are accessible only after pan is removed; two of the bolts are at front, two at rear and the fifth bolt is located under the oil pump. Lift engine and clutch assembly from tractor frame taking care not to damage the oil pump.

25. To reinstall engine, first make sure that engine and main frame mating surfaces are clean and free of all old gasket material and that the clutch, driveshaft, driveshaft bearing, snap ring and muff coupling are in position. Then, proceed as follows:

Coat main frame face and both sides of the new gaskets with rubberized gasket compound. Fit new bearing cap seals, pushing ends of seals into holes in cylinder block so that seals fit tightly in the bearing cap grooves. Thread two ⅜-inch UNC guide studs at opposite points in each side of main frame. Carefully lower engine onto main frame to avoid damaging gaskets or seals. Refer to the following torque values when tightening bolts and complete reassembly in reverse of removal procedure.

Engine block to main frame 30 Ft.-Lbs.
Oil pan to main frame 20 Ft.-Lbs.
Transmission cover (⅜) ..25 Ft.-Lbs.
Transmission cover (7/16) 45 Ft.-Lbs.

### Models 880 and 4600

26. To remove engine assembly, proceed as follows: Remove hood, disconnect hourmeter cable, throttle and engine stop controls and disconnect wiring to instrument panel. Drain fuel tank if desired to reduce weight, then unbolt and remove fuel tank and instrument panel as an assembly. Drain cooling system, disconnect radiator hoses and remove radiator. If equipped with power steering, unbolt and remove pump assembly leaving lines connected. Drain crankcase and remove oil pan to allow removal of three cylinder block to frame bolts located inside engine. Note: One of the three bolts is located below fuel injection pump or ignition distributor drive. Securely support tractor under front end of transmission housing and drive wood wedges tightly between each side of front support (main frame extension) and front axle. Remove vent cover from bottom of flywheel housing. With wood block on a rolling floor jack, support rear end of engine under flywheel housing. Unbolt flywheel housing from transmission and roll front unit away from rear section. Place secure supports under front assembly and remove rolling floor jack, then unbolt and remove clutch assembly, flywheel and flywheel housing. Unbolt cylinder block from frame, then taking care not to damage oil pump, lift engine from frame.

27. When reinstalling engine, make sure that mating surfaces of cylinder block are clean and free of all traces of old gasket. Coat gasket surface of main frame and both sides of new gaskets with rubberized gasket compound. Fit ends of new main bearing cap seals in holes of cylinder block so that seals fit snugly in bearing caps. Install two ⅜-inch UNC guide studs opposite each other in sides of main frame, then lower engine assembly into place. Install, but do not tighten, the cylinder block to main frame bolts. Place new "O" ring in rear end of camshaft bore, then install flywheel housing, tightening the bolts to a torque of 30 Ft.-Lbs. Then, tighten the cylinder block to main frame bolts to a torque of 30 Ft.-Lbs.

Install flywheel and tighten bolts to a torque of 50 Ft.-Lbs., then reinstall clutch assembly. Rejoin front section to rear and tighten flywheel housing to transmission bolts to a torque of 50 Ft.-Lbs., then complete reassembly of tractor by reversing disassembly procedure.

### Model 990

28. On models with 12-speed transmission and from serial No. 479539 to serial No. 487806 on six-speed models with dual clutch ("Livedrive"), the tractor must be split to remove the engine as outlined in paragraph 29. On six-speed models with dual clutch prior to serial No. 479539 and after serial No. 487806, and on six speed models with single clutch, the engine can be lifted from tractor as outlined in paragraph 31.

29. To split the 990 tractor for engine removal, proceed as follows: Drive wood wedges tightly between front support (extension) and front axle at each side of tractor and securely support rear end of front main frame just in front of transmission joint flange. Support rear end of tractor with rolling floor jack; jack pad should be located just behind clutch cover on bottom of transmission housing.

Remove engine hood, drain cooling system and disconnect throttle, stop control linkage, hourmeter cable and wiring to instrument panel. Disconnect fuel supply and excess fuel return lines from fuel tank. If equipped with power steering, unbolt and remove the pump leaving lines connected. It will be necessary to remove steel pipe retaining clips where fitted. Disconnect steering drag link from steering gear arm and remove engine starter. Unbolt transmission housing (main frame) and clutch housing from engine and front main frame, then roll rear section back until clutch shaft is clear of clutch assembly. Disconnect radiator hoses and unbolt and remove radiator. Unbolt cylinder block from front main frame; note that four of the bolts are long bolts installed from bottom side of main frame. Taking care not to damage oil pump, lift engine, flywheel and clutch assembly from frame.

30. When reinstalling engine, make sure that engine and frame gasket surfaces are clean and free of all old gasket material. Apply rubberized gasket compound to gasket surface of frame and to both sides of new gaskets. Insert ends of main bearing cap seals in holes in cylinder block so that seals fit snugly in main bearing

caps. Install two ⅜-inch UNC guide studs opposite each other in sides of main frame, then lower engine, flywheel and clutch assembly onto frame. Complete remainder of reassembly by reversing removal procedures. Tighten the cylinder block to main frame bolts to a torque of 30 Ft.-Lbs. and tighten transmission (main frame) to front frame bolts to a torque of 50 Ft.-Lbs.

31. To remove engine, flywheel and clutch assembly on models from which engine can be removed without splitting tractor (see paragraph 25), proceed as follows:

Remove engine hood and disconnect battery cables and main lead to starter. Drain cooling system, disconnect hoses and remove radiator. Disconnect throttle and stop control linkage from injection pump. Remove the pipes connecting fuel tank to fuel lift pump and excess fuel line to tank. Disconnect wiring to instrument panel and the hourmeter cable, then unbolt and remove fuel tank and instrument panel as an assembly.

Disconnect drag link from steering arm or remove steering arm from shaft, then unbolt and remove the steering gear unit as an assembly. On models with power steering unbolt and remove pump leaving lines connected. It will be necessary to unbolt steel pipe retaining clips on late models. On models with dual clutch, drain transmission, remove the power take-off assembly and withdraw power take-off driveshaft (cardan shaft) from rear end of tractor. Unbolt and remove clutch housing cover and the transmission cover. On models with band/drum type clutch brake, remove the band, disengage snap rings from clutch drive shaft and slide the brake drum and muff (internal splined) coupling forward far enough to clear transmission input shaft. On models fitted with spring leaf and friction pad clutch stop, disengage snap ring at front of muff coupling and slide coupling forward until clear of transmission input shaft. Unbolt driveshaft and clutch release bearing support from transmission housing (tractor main frame) and remove the clutch shaft brake bracket if so equipped. Remove the two figure-eight springs that connect clutch release fork to release bearing.

Unbolt engine from front main frame. Note that four long bolts are installed from bottom of main frame. Taking care not to damage oil pump and oil line, carefully lift engine from main frame until pump is clear of frame.

When reinstalling engine, observe general procedures outlined in paragraph 30, then complete reassembly by reversing removal procedures.

### Model 1200

32. To remove engine and clutch assembly, proceed as follows: Remove hood, drain cooling system and remove radiator. Drain fuel tank, disconnect wiring to instrument panel and the hourmeter cable, then remove fuel tank and instrument panel as an assembly. Drain lubricant from steering gear, then remove the steering gear assembly. If equipped with power steering, unbolt and remove pump assembly; it will be necessary to unbolt steel pipe retaining clips. Remove the two front operator's seat to support bracket bolts, tilt seat back and remove the two rear seat to bracket bolts and lift seat assembly from tractor. With the three-point lift links supported in raised position with latch, remove lift cylinder hydraulic line. Unbolt and remove transmission cover, noting that special washers are used on the four bolts adjacent to gear shift levers, on the five bolts through the axle housing and on the six bolts located under the steering gear housing. Remove engine starter, then unbolt and remove clutch cover. Disengage the wire retaining ring from muff (internal splined) coupling and extract the two plungers from coupling. Disengage snap ring at rear side of muff coupling and slide coupling rearward until clear of clutch driveshaft. Unbolt clutch stop assembly from main frame and catch the square coupling which will drop out as unit is unbolted. Remove the pivot bolt from left side of power take-off release fork and the cotter pin from right side of fork. Drain transmission lubricant, remove power take-off assembly and withdraw the power take-off driveshaft (cardan shaft) from rear of tractor. Unbolt coupling flange from front of engine crankshaft pulley and move the hydraulic lift pump driveshaft assembly sideways to clear crankshaft.

Unbolt engine from front main frame. Note that four bolts are inserted from bottom of main frame. Taking care not to damage the oil pump as engine is removed, carefully lift engine up until oil pump is clear of main frame.

When reinstalling engine, follow general procedures as outlined in paragraph 30, then complete reassembly by reversing removal procedures. Note that when installing muff coupling plungers, the chamfered side of the plungers must be towards the non-driving sides of the shaft splines. Thus, the two plungers must be installed with chamfered sides facing in opposite directions; the front plunger with chamfer on its leading side and the rear plunger with chamfer on its trailing side.

## R&R CYLINDER HEAD

### All Diesel Models

33. To remove the cylinder head, first remove engine hood and drain cooling system. Remove upper radiator hose and the hose connecting intake manifold to pipe through radiator tank. Disconnect temperature gage sending unit. Loosen water pump by-pass hose clamps and disconnect by-pass hose on models so equipped. Remove leak-off pipe from top of fuel injectors and the injection pump to injector high pressure lines and immediately cap all openings. Remove the fuel injector assemblies. Remove external rocker arm oil tube that connects cylinder head to block. Remove the intake and exhaust manifolds. Remove engine breather pipe, breather and rocker arm cover. Remove rocker arms assembly and push rods. Unbolt and remove the cylinder head loosening the bolts in reverse order of tightening sequence shown in Fig. 28 or 29; otherwise, distortion of cylinder head may occur.

34. If cylinder head retaining stud bolts have been removed from block, they should be reinstalled to a torque of 35 Ft.-Lbs. Cylinder sleeves or cylinder sealing rings should protrude 0.002-0.005 above cylinder block. If a copper faced head gasket is being installed, coat both sides of gasket with gasket sealing compound. Composition type head gasket should be installed dry. On models having rubber sealing ring between water pump and cylinder head, clean the recessed seats in cylinder and water pump and place new rubber sealing ring in water pump recess; on other models, install new by-pass hose on water pump. Lower cylinder head onto cylinder block, loosely install the cylinder head retaining nuts and cap screws and, on models so equipped, tighten by-pass hose clamps. Refer to Fig. 28 for 3-cylinder engines, or to Fig. 29 for models 990 and 1200, and tighten the cylinder head retaining nuts and cap screws to a torque of 30 Ft.-Lbs. following appropriate tightening sequence. Re-tighten the nuts and cap screws to a torque of 60 Ft.-Lbs., then finally tighten to a torque of 90 Ft.-Lbs.

After installing push rods and rocker arms assembly, adjust valve clearance with engine cold as outlined in paragraph 37 for 3-cylinder engines, or as in paragraph 38 for

models 990 and 1200. Complete reassembly of tractor by reversing disassembly procedure, start engine and operate for one-half hour. Stop engine and re-tighten cylinder head retaining nuts and cap screws in proper sequence to a torque of 90 Ft.-Lbs. Allow engine to cool, then readjust valve clearance as outlined in paragraph 37 or 38.

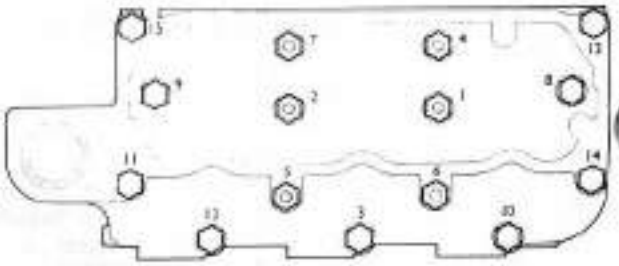

Fig. 28 — Sequence for tightening cylinder head bolts on all three cylinder models.

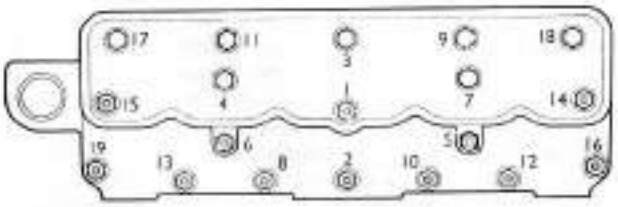

Fig. 29 — Sequence for tightening cylinder head bolts on four cylinder models 990 and 1200.

### Models 3800 and 4600

35. To remove gasoline engine cylinder head, proceed as follows: Remove engine hood, drain radiator and disconnect upper radiator hose. Disconnect oil tube to governor drive housing and then remove the oil tube that connects cylinder head to cylinder block. Drain intake manifold and remove pipe connecting water pump to intake manifold housing. Disconnect governor linkage, air cleaner hose, choke and engine stop cables and the fuel line at carburetor assembly. Disconnect engine breather, remove rocker arm cover and unbolt and remove the rocker arm shaft and rocker arms assembly. Disconnect spark plug wires and remove the spark plugs. Then remove the nuts and cap screws and cylinder head assembly.

When reinstalling cylinder head, refer to procedure outlined in paragraph 34.

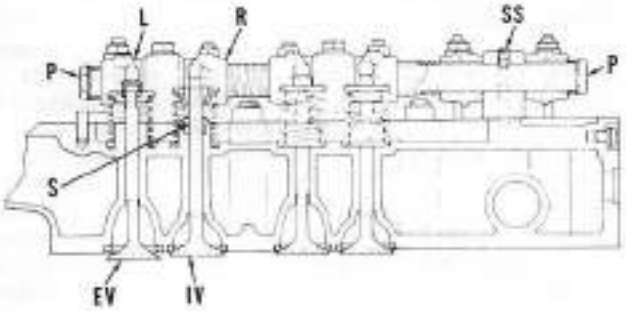


Fig. 30 — Cut-away view showing rocker arm and valve installation in 3-cylinder engine; four-cylinder engines are of basically similar construction.

EV. Exhaust valve
IV. Intake valve
L. Left-hand rocker arm
P. Plugs
R. Right-hand rocker arm
S. Valve stem seal
SS. Set screw

## ROCKER ARMS AND SHAFT

### All Models

36. To remove rocker arms and shaft assembly, remove hood, disconnect breather tube and remove rocker arm cover. Then, unbolt and remove rocker arms assembly by evenly loosening and removing the retaining cap screws.

To disassemble, remove the brass plug (P—Fig. 30) from each end of shaft and withdraw the rocker arms, springs and shaft brackets and place them in order as they were removed. Rear bracket has shaft retaining set screw (SS).

Rocker arm shaft diameter is 0.748-0.749 and bushing inside diameter is 0.750-0.7505, resulting in a clearance of 0.001-0.0025. Rocker arm and bushing are available as an assembly, or bushing may be renewed where shaft to bushing clearance is excessive. When installing new bushing, be sure that the oil hole in bushing is aligned with oil hole in rocker arm, then ream or hone bushing inside diameter for proper clearance. If valve stem contact face of rocker arm is excessively worn, it may be reground providing original curvature is maintained; remove no more material than necessary to renew contact face.

When reassembling, first install shaft in rear bracket with oiling holes down and secure shaft with set screw. Then, peen the bracket around screw to retain screw tightly and complete reassembly. Right-hand (R) and left-hand (L) rocker arms are installed in pairs at each support bracket with offset ends towards each other as shown in Fig. 30.

## VALVE GAP ADJUSTMENT

### All 3-Cylinder Models

37. Adjust valve gap (tappet clearance) with engine cold on all models. On model 770 with AD3/30 engines, model 880 "Livedrive" (dual stage clutch) prior to engine serial No. 3424, or model 880 with single clutch prior to engine serial No. 1495, adjust intake valves to 0.015 and exhaust valves to 0.012. On model 770 with model AD3/49 engine, on all later model 880, and on all models 780, 3800 and 4600, adjust valve gap to 0.010 on intake and 0.007 on exhaust. Note: In the event that a later style camshaft, pistons and valves are installed in early 770 or 880 engine, the later valve gap adjustment specifications should also be used; refer to paragraph 49.

To adjust valves, proceed as follows: Turn engine so that timing peg will fall into indention in flywheel through "TDC" hole in transmission or flywheel housing. If No. 1 cylinder is on compression stroke, adjust both

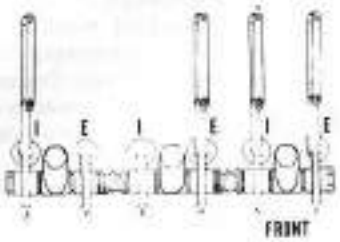


Fig. 31 — With No. 1 piston on TDC compression on 3-cylinder models, adjust intake and exhaust valve gap on No. 1 cylinder, exhaust valve gap on No. 2 cylinder and intake valve gap on No. 3 cylinder. Refer also to Fig. 32.

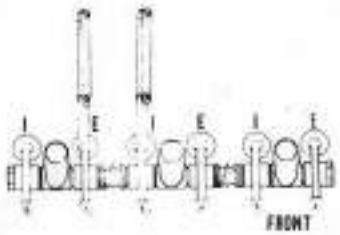


Fig. 32 — With No. 1 piston on TDC exhaust on 3-cylinder models, adjust intake valve on No. 2 cylinder and exhaust valve on No. 3 cylinder. Refer also to Fig. 31.

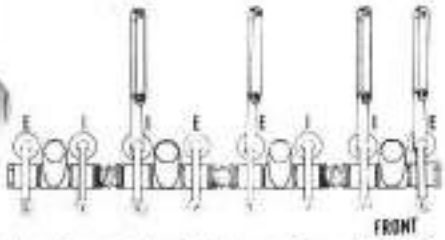


Fig. 33 — On 4-cylinder engines, adjust intake and exhaust valves of No. 1 cylinder, exhaust valve on No. 2 cylinder and intake valve on No. 3 cylinder when No. 1 piston is at TDC on compression stroke. Refer also to Fig. 34.

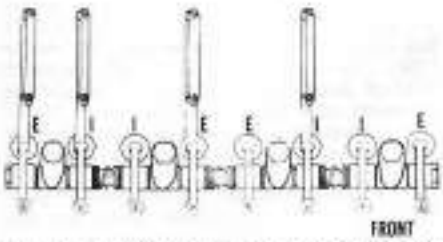


Fig. 34 — With No. 1 piston of 4-cylinder engine on TDC exhaust, adjust intake valve on No. 2 cylinder, exhaust valve on No. 3 cylinder and the intake and exhaust valves on No. 4 cylinder. Refer also to Fig. 33.

the intake and exhaust valves on No. 1 cylinder, the exhaust valve on No. 2 cylinder and the intake valve on No. 3 cylinder. If No. 1 cylinder is on exhaust stroke (both valves partly open), adjust intake valve on No. 2 cylinder and exhaust valve on No. 3 cylinder. Then, turn engine one complete revolution so that timing peg will again fall into indention in flywheel and adjust remaining valves. Refer also to Figs. 31 and 32 for adjustment procedure.

### All 4-Cylinder Models

38. Valve gap (tappet clearance) is adjusted on all models with engine cold.

On model 990 "Livedrive" (dual stage clutch) prior to engine serial No. 60390, or model 990 with single clutch prior to engine serial No. 40725, adjust intake valves to 0.015 and exhaust valves to 0.012. On all later model 990 engines and on all model 1200, adjust intake valve clearance to 0.010 and exhaust valves to 0.007. Note: In the event that a later style camshaft, pistons and valves are installed in early model 990 engine, the later valve adjustment specifications (0.010 for intake, 0.007 for exhaust valves) should also be used. Refer to paragraph 50 regarding camshaft information.

To adjust valves, proceed as follows: Turn engine so that timing peg will fall into indention in flywheel through "TDC" hole in flywheel housing. If No. 1 piston is on compression stroke, adjust both the intake and exhaust valves on No. 1 cylinder, exhaust valve on No. 2 cylinder and intake valve on No. 3 cylinder. If No. 1 piston is on exhaust stroke, adjust intake valve on No. 2 cylinder, exhaust valve on No. 3 cylinder and both the intake and exhaust valves on No. 4 cylinder. Then, turn the engine one complete revolution so that timing peg will again fall into indention in flywheel and adjust remaining valves. Refer also to Figs. 33 and 34 which show adjustment procedure.

## VALVES, GUIDES AND SEATS

### All Models

39. Intake and exhaust valve face and seat angle is 45 degrees. Intake and exhaust valves seat on renewable inserts in cylinder head. If seats are rough or pitted, they should be reground using a 45 degree stone. If grinding seats results in a seat width of over 0.065, the insert should be renewed. To remove old valve seat, first crack it with a sharp chisel taking care not to damage the cylinder head and covering the insert with a cloth to catch any flying pieces. Remove insert and clean the counterbore, then chill new insert with dry ice and quickly install seat, chamfered edge first, into counterbore using a suitable driver. After seat is installed, grind off seat flush with cylinder bore, then grind new seat with 45 degree stone. Desired seat width is approximately 3/64-inch.

Stem diameter of both intake and exhaust valves is 0.3722-0.3732 and guide bore diameter is 0.374-0.375, resulting in a stem to guide clearance (new) of 0.0008-0.0028. Valve guides are integral with cylinder head. When guides are worn more than 0.006, they should be reamed to 0.384-0.385 (0.010 oversize), or to 0.394-0.395 (0.020 oversize) and new valves with 0.010 or 0.020 oversize stems be installed.

NOTE: On model 770 with AD3/30 engine, early model 880 (prior to engine serial No. 3424 on "Livedrive" models or engine serial No. 1495 on single clutch models) and early 990 (prior to engine serial No. 60390 on "Livedrive" models or engine serial No. 40725 on single clutch models), intake valve heads are thicker than on later models with camshaft having high lift intake cams. Although the later type valves with thin heads may be used in early engines, the early type intake valves cannot be used on later engines as the thicker valve heads will foul the pistons. In the event that a later style camshaft (refer to paragraph 49 or 50) is installed in an early engine, the later type intake valves must also be installed.

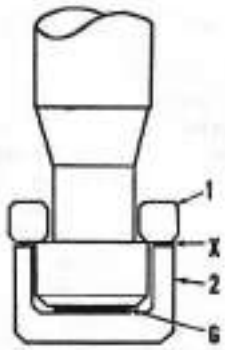


Fig. 35 — Feeler gauge method of checking rotor cap clearance between cap and end of stem; refer to text. Use of special micrometer gage is preferred.

## INTAKE VALVE STEM SEALS

### All Models

40. Special intake valve stem seals (S—Fig. 30) are fitted into a counterbore at top of guide. Since the groove in top end of valve stem will damage the seal as valve is removed, it will be necessary to install new seals as follows:

Clean counterbore at top of intake valve guide making sure that there are no burrs around edge of hole. Lubricate outside of new stem seal, then drive it into counterbore using suitable piloted driver (David Brown tool No. 961236, if available). Lubricate valve stems, and making sure the correct valves are being installed, reassemble cylinder head using normal procedure.

## EXHAUST VALVE ROTATORS

### All Models

41. Exhaust valves are fitted with free type valve rotator caps which will not function unless there is a gap between end of valve stem and inside face of rotator cap when open end of rotator contacts the spring retainer collets (keepers). Desired clearance is 0.001-0.003. Special micrometer gages are available for measuring clearance between cap and end of valve stem. If special gages are not available, the following method may be used:

Fit a disc made from 0.010 thick shim stock between cap and end of valve stem as shown in Fig. 35. Place the spring retainer collets (keepers) in groove of valve stem and measure the gap (X) between collets and cap with feeler gage while pressing down on collets. Subtract measured gap (X) from shim (G) thickness to obtain clearance. If less than 0.001, grind end of valve stem squarely to obtain desired 0.001-0.003 clearance. Lapping open end of cap will reduce the clearance.

## VALVE SPRINGS

### All Models

42. On early model 880 (prior to engine serial No. 3424 on "Livedrive" models or No. 1495 on single clutch models) and early model 990 (prior to engine serial No. 60390 on "Livedrive" models or No. 40725 on single clutch models), intake and exhaust valve springs are interchangeable. Refer to the following specifications:

**Part No. 907894:**

Free length, inches .....1.92
Lbs. force when compressed to 1.53 inches .....52
Lbs. force when compressed to 1.167 inches .....100
Identification spot color .....none

On late model 880 (starting with engine serial No. 3424 on "Livedrive" models and No. 1495 on single clutch models), later model 990 (starting with engine serial No. 60390 on "Livedrive" models and No. 40725 on single clutch models, ending with introduction of 4/49 engine), early model 1200 (prior to engine serial No. 4913) and all models 770 and 780 are equipped with interchangeable intake and exhaust valve springs. Note: Some model 880 and 990 may use a part No. 907894 exhaust valve spring; however, the newer spring, part No. 914529, may be used for service replacements for the 907894 spring if used in sets. Refer to the following specifications:

**Part No. 914529:**

Free length, inches .....1.97
Lbs. force when compressed to 1.53 inches .....40
Lbs. force when compressed to 1.102 inches .....80
Identification spot color .....Red

On model 990 (with 4/49 engine), late model 1200 (starting with engine serial No. 4913) and on models 3800 and 4600, intake and exhaust valve springs are not interchangeable. Refer to the following specifications:

**Part No. 921435 (Intake Valve Spring):**

Free length, inches .....2.127
Lbs. force when compressed to 1.646 inches .....38
Lbs. force when compressed to 1.148 inches .....77
Identification spot color ...yellow

**Part No. 921436 (Exhaust Valve Spring)**

Free length, inches .....2.132
Lbs. force when compressed to 1.608 inches .....45
Lbs. force when compressed to 1.180 inches .....82
Identification spot color .....blue

## R&R TIMING GEAR COVER

### Model 1200

43. To remove timing gear cover, remove engine hood, drain cooling system and remove radiator lower hose. Unbolt hydraulic pump drive flange from crankshaft pulley and using jack screws threaded into the tapped holes in flange, extract flange from pulley. Remove the rubber spacer and steel disc located at rear end of pump driveshaft and slide driveshaft rearward until free of pump drive coupling. Some force will be required to pull the shaft splines past the "O" ring in coupling. Remove generator and generator mounting bracket. Remove crankshaft pulley retaining nut and remove pulley from crankshaft. The timing gear cover can then be unbolted and removed from engine.

Reinstall timing gear cover using new gasket. Note that the four cap screws located at lower side of crankshaft pulley are just the correct length to thread through the engine front plate. Using longer cap screws in this position will force lower side of engine front plate forward resulting in an oil leak and possible damage. Take care not to damage crankshaft oil seal while installing cover and crankshaft pulley. Tighten crankshaft pulley retaining nut securely. Place retaining "O" rings on hydraulic pump driveshaft and place flange on rear end of shaft. Insert front end of shaft into pump drive coupling, then push front "O" ring into retaining notch in coupling. Position the steel disc and rubber spacer between rear end of shaft and front end of crankshaft, then slide flange over the spacer and disc into pulley. Install and securely tighten the flange cap screws, then push rear "O" ring into retaining groove of drive flange. Complete remainder of reassembly by reversing disassembly procedure.

### All Other Models

44. To remove timing gear cover, remove engine hood, remove battery, drain cooling system and remove radiator. Loosen the generator and power steering pump and disengage drive belts from crankshaft pulley. Remove generator and/or generator brackets on models where they will interfere with timing gear cover removal. Remove crankshaft pulley retaining nut and the pulley from crankshaft, then unbolt and remove timing gear cover.

Reinstall cover using new gasket and crankshaft oil seal, making sure lip of seal is towards inside of cover. On model 990, be sure correct cap screws are installed in lower bolt holes as installing long bolts at this location will force the engine front plate forward causing an oil leak and possible damage. Complete reassembly by reversing disassembly procedure. Note: On 3-cylinder models, install crankshaft pulley to center the cover and oil seal before tightening cover retaining bolts.

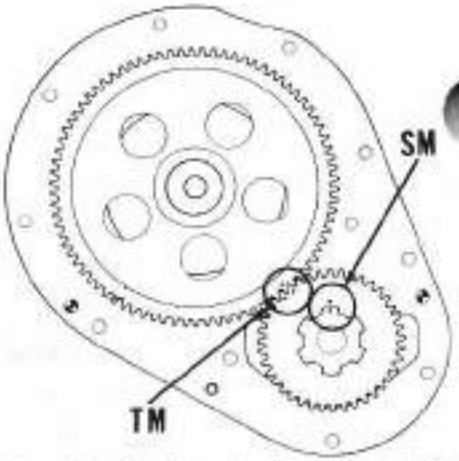


**Fig. 36 — Drawing showing timing marks (TM) on crankshaft gear and camshaft gear of 3-cylinder engines. Late production camshaft gear has a tooth marked "D" for diesel engines and another tooth marked "G" for gasoline engines; use appropriately marked tooth meshed between the two punch marked teeth of crankshaft gear. When installing crankshaft gear, be sure spline marks (SM) are aligned as shown.**

## TIMING GEARS

### All 3-Cylinder Engines

45. The timing gears on all three cylinder engines consist only of the camshaft gear and crankshaft gear. To renew timing gears, first remove timing gear cover. Turn engine so that No. 1 piston is on TDC of compression stroke and timing pin will fall into flywheel detent through "TDC" hole in transmission cover. At this time, the marked tooth on camshaft gear should be centered between the two punch marked teeth on crankshaft gear. Early camshaft gear will have a single punch marked tooth as shown in Fig. 36. Late camshaft gears will have one tooth identified by a "D" stamped into the gear and a second tooth with a "G" stamped into gear face. On diesel engines, the tooth marked "D" should be located between the two punch marked teeth of crankshaft gear; on gasoline engines, the tooth marked "G" is timed to the crankshaft gear.

With timing gear cover removed, the crankshaft gear can be removed; the gear should be a snug, but not tight fit on the crankshaft splines. To remove camshaft gear, remove the retaining cap screw and washer and pull gear from shaft, then remove

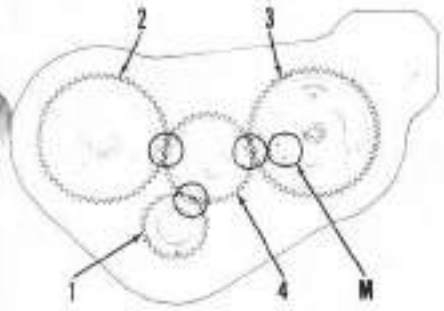


Fig. 37 — View showing timing marks on crankshaft gear (1), camshaft gear (2), injection pump drive gear (3) and idler gear (4) on four-cylinder engines. On earlier model 990, the two marks (M) on injection pump drive adapter are placed to same side of gear as gear timing marks.

Woodruff key from camshaft. CAUTION: Do not turn camshaft or crankshaft with timing gears removed or damage may be caused from interference between pistons and valve heads.

To install new gears, slide crankshaft gear onto crankshaft making sure that the punch marks (SM) on shaft and gear are aligned as shown. Install key in camshaft, then install camshaft gear with punch marked tooth (early type camshaft gear), tooth marked "D" (late gear, diesel engine) or tooth marked "G" (late gear, gasoline engine) between the two punch marked teeth on crankshaft gear. Install camshaft gear retaining washer and cap screw and tighten cap screw to a torque of 40 Ft.-Lbs.

### Models 990 and 1200

46. The timing gears consist of the crankshaft gear, camshaft gear, fuel injection pump drive gear and an idler gear. To renew the gears, first remove the timing gear cover, remove battery, then proceed as follows:

Turn the engine so that No. 1 piston is at TDC on compression stroke; at this time, timing punch marks on crankshaft gear, camshaft gear and fuel injection pump drive gear should be towards center of idler gear, although the timing marks on idler gear probably will not be aligned with those of other gears.

Cut locking wire on camshaft gear retaining cap screw and remove the cap screw taking care not to turn the shaft from set position. Using suitable puller, remove camshaft gear. Do not remove camshaft gear retaining plate cap screws. Remove Woodruff key from camshaft.

Unbolt idler gear shaft support bracket (16—Fig. 39 or 11—Fig. 40) and remove the bracket taking care not to lose any shims, if present, between bracket and engine front plate. Remove gear from shaft, then withdraw shaft from bore in cylinder block. If necessary, remove slotted head plug from end of shaft, thread adapter bolt into shaft and remove shaft with slide hammer.

On model 990 with AD4/47 engine cut the locking wire and remove the three cap screws, steel plate (15—Fig. 39) and fuel injection pump drive coupling (14) from injection pump drive gear (12). Extract split washer (13) and remove gear from bracket (9). The oil connector (7) can be removed at this time to check for any sludge in bolt (6) which incorporates an oil restrictor. If injection pump gear journal on support (9) is worn or scored, first remove the fuel injection pump then unbolt and remove support from rear side of engine front plate.

On 990 with 4/49 engine, straighten tab washer and remove the three cap screws and fuel injection pump drive gear from pump drive hub. Note: Gear is timed to hub by a dowel pin.

On model 1200, straighten the tab washer, remove nut and pull fuel injection pump drive gear (8—Fig. 40) from injection pump camshaft. Take care not to lose Woodruff key from pump shaft.

The crankshaft gear is keyed and press fitted to the crankshaft and should not be removed unless renewal is indicated. Remove the gear using a suitable puller and extract Woodruff key from shaft.

Carefully inspect all gear teeth for excessive or unusual wear patterns, chipped teeth, etc. Specifications for timing gear backlash are not available. Clearance (new parts) between idler gear shaft and gear bore should be 0.001-0.003; renew gear and/or shaft if bearing surface of shaft or gear is scored or if clearance between shaft and gear is excessive.

47. To reinstall timing gears, proceed as follows: Be sure camshaft has not been turned (keyway in shaft should be downward) and install Woodruff key, gear, retaining washer and cap screw. The punch marked tooth on camshaft gear should then point towards center of idler gear shaft bore in cylinder block. Note: On model 1200, it is not necessary to time power steering pump drive gear with camshaft gear.

If crankshaft gear was removed, install Woodruff key in crankshaft (keyway in shaft should be downward), then install new gear with punch marked teeth out and pointing towards center of idler gear shaft bore in cylinder block.

On model 1200, install fuel injection pump drive gear, tab washer and retaining nut, tighten nut to a torque of 45 Ft.-Lbs. and turn gear so that punch marked tooth is towards center of idler gear shaft bore.

On model 990 with 4/49 engine, install pump drive gear on dowel pin in hub, then secure with locking plate and the three cap screws. Tighten cap screws to a torque of 20 Ft.-Lbs., and bend washer against cap screw heads.

On model 990 with AD4/47 engine, install injection pump gear support and oil passage connector with new gaskets, if removed. Lubricate gear journal on support and inside diameter of gear, then place fuel injection pump drive gear on support with punch marked tooth out. Place the split washer in groove in support, retaining with grease if necessary. Turn gear so that punch marked tooth is towards idler gear shaft bore. Install pump drive adapter plate on fuel injection pump shaft, aligning master splines on adapter and shaft, then turn adapter so that marks (*M—Fig. 37*) are towards punch marked tooth on injection pump drive gear. Then, install the steel plate and retaining cap screws and secure the cap screws with wire. Timing of injection pump drive gear to power steering pump drive gear is not necessary.

If slotted head plugs have been removed from idler gear shaft, reinstall using Loctite. Install shaft into bore in cylinder block, then lubricate shaft and gear and install idler gear so that all timing marks are aligned as shown in Fig. 37. Install idler gear support bracket with any shims found when bracket was removed, then check end play of idler gear on shaft. If end play is not within the limits of 0.002-0.004, remove the support bracket and add shims to increase end play, or remove shims to decrease end play as required.

Install oil slinger on crankshaft on models so equipped, then reinstall timing gear cover.

## VALVE TAPPETS (CAM FOLLOWERS)

### All Models

48. The mushroom type tappets ride directly in unbushed bores in cylinder block and can be removed after removing engine camshaft. Tappet diameter (new) is 0.623-0.624.

## CAMSHAFT AND BEARINGS

### All 3-Cylinder Models

49. To remove camshaft without removing engine from tractor, proceed as follows: Remove hood, drain cooling system and remove radiator. Fol-

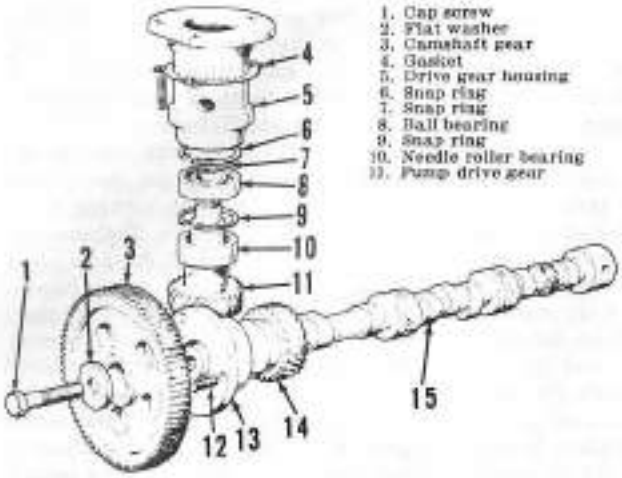


1. Cap screw
2. Flat washer
3. Camshaft gear
4. Gasket
5. Drive gear housing
6. Snap ring
7. Snap ring
8. Ball bearing
9. Snap ring
10. Needle roller bearing
11. Pump drive gear
12. Cap screws
13. Front bearing & retainer
14. Driving gear
15. Camshaft

**Fig. 38 — Exploded view showing 3-cylinder diesel camshaft and fuel injection pump drive assemblies. Gasoline engine distributor drive gear and housing are similar to injection pump drive gear and housing. Gasoline and diesel camshafts and camshaft gears are alike except that a different gear tooth is timed to crankshaft gear.**

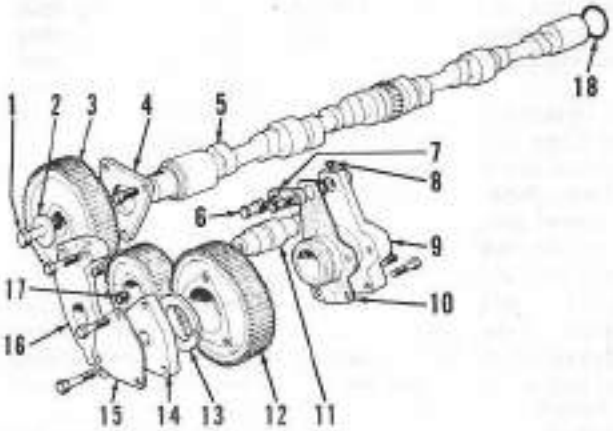


**Fig. 39 — Exploded view of camshaft, idler gear and fuel injection pump drive gear assemblies for model 990 with AD4/47 engine. The floating pump drive gear (12) drives the injection pump via adapter plate (14) and splined shaft. Model 990 with 4/49 engine has pump drive gear mounted directly on pump shaft similar to model 1200; see Fig. 40.**

1. Cap screw
2. Retaining washer
3. Camshaft gear
4. Camshaft retainer plate
5. Camshaft
6. Restrictor bolt & tube
7. Oil feed connection
8. Plug
9. Drive gear support flange
10. Gasket
11. Idler gear shaft
12. Injection pump drive gear
13. Split washer
14. Adapter plate
15. Lock plate
16. Support bracket
17. Idler shaft plug
18. "O" ring

lowing general procedure outlined in paragraph 44, remove timing gear cover, then remove camshaft gear as in paragraph 45. Remove rocker arm cover, rocker arms and shaft assembly and push rods. Disconnect hourmeter drive cable at engine and remove drive unit (see Fig. 41). Disconnect fuel lines and remove fuel lift (transfer) pump assembly. On diesel models, refer to paragraph 89 and remove the fuel injection pump, then remove pump drive assembly as in paragraph 90. On gasoline models, remove the ignition distributor, disconnect governor linkage and oil tube from governor and drive housing, then remove the governor and drive assembly; refer to paragraph 111 and 112. Remove tappet and push rod covers from side of cylinder block, lift up each tappet (cam follower) and retain in lifted position by placing a ½-inch I.D. "O" ring on each tappet. The camshaft can then be withdrawn from front end of cylinder block after unbolting and removing the camshaft front bearing support (locating housing).

The fuel injection pump or governor-distributor and oil pump drive gear (14—Fig. 38) is renewable separately from camshaft. Using suitable sleeve, press gear towards rear of shaft to remove. When installing gear, be sure Woodruff key is in place in camshaft, then press gear onto shaft with keyway aligned until it fits tightly against shoulder on shaft.

Camshaft specifications are as follows:

Front journal dia. .....2.3725-2.3735
No. 2 journal dia. .....1.8707-1.8720
No. 3 journal dia. .....1.8409-1.8422
No. 4 journal dia. .....1.7940-1.7954
Rear journal dia. .....1.7475-1.7488
Camshaft end float .....0.002-0.006
Front bearing support thickness .....0.311-0.313

NOTE: A new camshaft with high lift intake cams was introduced for model 990 tractors at engine serial No. 3424 on "Livedrive" models and engine serial No. 1485 on single clutch models, and for model 770 tractors

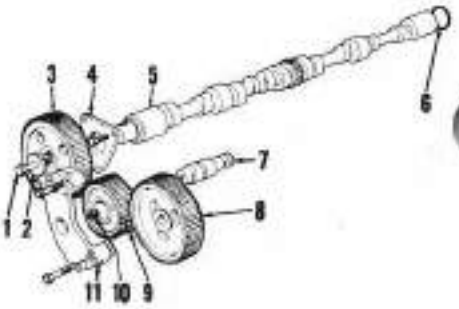


**Fig. 40 — Exploded view of model 1200 camshaft, idler gear and fuel injection pump drive gear. Model 990 with 4/49 engine is similar except that fuel injection pump drive gear is retained with three cap screws and dowel pin instead of nut and Woodruff key.**

1. Cap screw
2. Retaining washer
3. Camshaft gear
4. Camshaft retainer plate
5. Camshaft
6. "O" ring
7. Idler gear shaft
8. Injection pump drive gear
9. Idler gear
10. Idler shaft plug
11. Idler shaft support bracket

with model AD3/49 engines. The high lift camshaft (part No. 914527) used in later model 770 and 880 tractors is also used in all models 780, 3800 and 4600 engines and can be installed in early model 880 tractors providing new pistons (part No. 914668), intake valves (part No. 914528) and valve springs (part No. 91429) are also installed. The high lift camshaft cannot be installed in 770 tractors with model AD3/30 engines as pistons having deep valve recesses are not available for this engine.

Install the camshaft and gear assembly in cylinder block, then install front bearing support and retainer (locating plate). Check to see that camshaft end float is within limits of 0.002-0.006, then complete reassembly by reversing disassembly procedure. Retime ignition distributor as outlined in paragraph 118, or on diesel models, retime fuel injection pump as outlined in paragraph 89.

### Models 990 and 1200

50. To remove the camshaft without removing engine from the tractor, proceed as follows: Remove hood, drain cooling system and remove radiator. Remove rocker arm cover, rocker arms and push rods. Remove timing gear cover as outlined in paragraph 43 or 44, then remove camshaft gear as in paragraph 46. Drain oil sump and remove oil pan and oil pump. Disconnect fuel lines and remove fuel lift (transfer) pump. Remove tappet (push rod) covers from side of cylinder block and using ½-inch I.D. "O" rings or spring clips, retain the tappets (cam followers) in raised position. Then, unbolt camshaft retainer plate and withdraw camshaft from engine.

Camshaft specifications are as follows:

Front journal dia. .....1.870-1.872

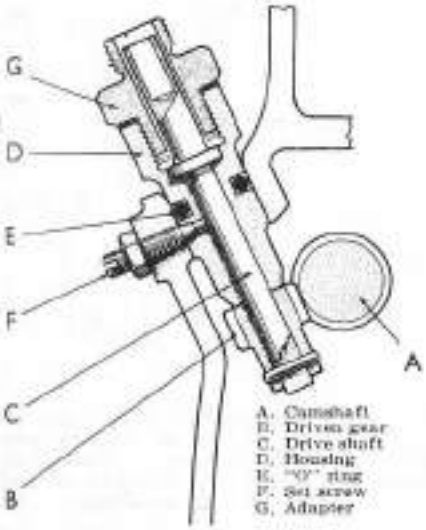


**Fig. 41 — Cross-sectional view of hourmeter drive assembly for three cylinder engines. Set screw (F) must be removed and the assembly withdrawn from crankcase to permit camshaft removal.**

No. 2 journal dia. .....1.825-1.827
No. 3 & No. 4
journal dia. .....1.8110-1.8113
No. 5 journal dia. .....1.763-1.765
Rear journal dia. .....1.747-1.749
Camshaft end float .....0.010-0.020
Retainer plate thickness 0.240-0.245

NOTE: A new camshaft with high lift intake cams was introduced for model 990 tractors at engine serial No. 80390 on "Livedrive" models and at engine serial No. 40725 on models with single clutch. The high lift camshaft (part No. 914673) can be installed in earlier model 990 engines providing that new pistons (part No. 915308), intake valves (part No. 914528 std.) and valve springs (part No. 91429) are used with the new type camshaft. The later pistons, valves and intake springs can be installed with the earlier type camshaft. A new camshaft, not interchangeable with prior camshaft, was introduced for model 1200 at engine serial No. 4913 along with new cylinder head, valves and related parts.

Install the camshaft in cylinder block, then install retainer plate. Check to see that camshaft end float is between the limits of 0.010 and 0.020, then complete reassembly by reversing disassembly procedure. Make sure to remove all of the spring clips or "O" rings used to retain the tappets in raised position. Note: Remove the hourmeter drive cable from cylinder block to permit easy installation of oil pump, then reconnect hourmeter drive cable.

## CAMSHAFT REAR SEAL OR PLUG

### All Models

51. The camshaft rear bore is sealed by an expansion plug on models 770, 780 and 3800, and by an "O" ring inserted in counterbore which seals against flywheel housing on models 880 and 4600, or against engine rear plate on other models.

## CONNECTING ROD AND PISTON ASSEMBLIES

### All Models

52. Connecting rod and piston assemblies are removed from above after removing cylinder head, oil pan pump assembly with tubes and suction screen and removing the connecting rod caps. Note: Be sure that rod and cap are marked with cylinder number before removing the caps. Marks are on camshaft side.

When reinstalling connecting rod and piston assemblies, first be sure that piston and connecting rod are properly assembled; valve recesses in top of piston should be on same side as cylinder identification number on rod and cap. Install the assemblies with valve recesses in piston and rod and cap numbers towards camshaft side of engine. Tighten rod cap retaining nuts to a torque of 50 Ft.-Lbs. Note: Be sure that cap is installed with machined notch for bearing tang to same side of assembly as notch in connecting rod.

## PISTON PINS AND BUSHINGS

### All Models

53. Piston pins are fully floating and are retained in pistons by snap rings; piston pins are 1.250 inch diameter on all models. To remove piston pin, first remove the snap rings, then heat piston in hot oil. The pin should then be easily pushed from piston. Pins are available in standard size only.

Connecting rods are fitted with renewable piston pin bushings. Using suitable mandrel, press old bushings from rods, then carefully align oil holes in new bushings with oil holes in connecting rods as bushings are pressed into place. After installing new bushings, hone or ream so that piston pin is a light push fit in bushing. Pin should be light drive fit in piston.

Heat pistons in hot oil to facilitate reassembly. Be sure that valve recesses in piston and cylinder identification numbers on rod and cap are to same side of assembly, then securely install piston pin retaining snap rings.

## CONNECTING RODS AND BEARINGS

### All Models

54. Connecting rod bearings are of the slip-in, precision type, renewable from below after removing oil pan, oil pump and connecting rod caps. When installing new bearing inserts, make sure that rod and bearing cap numbers are in register and face towards camshaft side of engine. Bearing inserts are available in undersizes of 0.010, 0.020 and 0.030 as well as standard size. Check crankshaft crankpins and the connecting rod bearings against the following values:

**Model 990 With AD4/47 (Sleeved)**
**Engine:**
Crankpin diameter ...2.2480-2.2485
Bearing to crankpin
clearance .....0.0015-0.0025

**Model 990 With 4/49 (Unsleeved)**
**Engine And All Other Models:**
Crankpin dia. .....2.3730-2.3735
Bearing to crankpin
clearance .....0.002-0.004

On all models, tighten the connecting rod cap nuts to a torque of 50 Ft.-Lbs.

## PISTONS AND PISTON RINGS

### All Models

55. Pistons for all diesel engines are of aluminum alloy and have a combustion chamber machined in their crown as well as recesses to clear the intake and exhaust valve heads. Three compression rings are fitted above the piston pin and an oil scraper ring is located below the piston pin. Piston pin is fully floating and is retained by a snap ring at each end of pin.

On all models, nominal ring side clearance in groove is 0.002-0.0035 for all rings; pistons should be renewed where ring side clearance is 0.010 or more when measured with a new ring. Nominal piston ring end gap is 0.010-0.015 on model 990 with 3⅝ inch bore and is 0.011-0.016 on all other models. Maximum allowable ring end gap, measured in unworn part of cylinder bore, is 0.060. Oil control ring sets are available and should control oil consumption in cylinder bores worn up to 0.010 larger than nominal cylinder bore size; refer to paragraph 56. Pistons and rings are available in oversizes of 0.020 and 0.040 for both sleeved and unsleeved engines.

Piston skirt to cylinder bore clearance is 0.0062-0.008 on model 770 and model 880 engines with sleeves, 0.006-0.0075 on model 990 with sleeves and 0.0065-0.008 on all unsleeved diesel engines. Factory specifications for piston skirt to cylinder bore clearance for gasoline engines are not available at time of publication of this manual.

## CYLINDER SLEEVES AND BORES

### Early Models 770 and 880

56. Early models 770 and 880 engines were fitted with dry type cylinder sleeves. Sleeve bore inside diameter (new) is 3.8125-3.8135. Oversize pistons and rings are not available for use with the thin wall dry sleeves; therefore, new sleeves must be installed if wear is excessive. A service

oil control ring set is available for use where sleeve wear (taper) is 0.010 or less.

Carefully remove old sleeves using properly fitted adapter and sleeve puller. If new sleeves are chilled, or the cylinder block is expanded by heating with a steam cleaner or in boiling water, the sleeves may be pushed into place by hand. Lubricate outside of sleeves with motor oil before pushing them into place. Note: Sleeves are of the thin wall type and care must be taken during removal to prevent damage to cylinder block and during installation to prevent them from being cracked.

Sleeve protrusion (excluding ridge) above cylinder block should be 0.002-0.005 for proper sealing of gasket.

### Model 990 (With AD4/47 Engine)

57. Model 990 AD4/47 engines are fitted with wet type sleeves. The sleeves are sealed at their lower ends by two "O" rings and at the top by the cylinder head gasket. Sleeve inside diameter (new) is 3.6250-3.6255.

Deposits from engine coolant around lower end of sleeve may cause the sleeve to be "cemented" in place, thus requiring considerable removal force. Be sure to use proper sized adapter with sleeve puller. Before installing new sleeve, thoroughly clean cylinder block bores at top and bottom contact points. Install new "O" rings in grooves at bottom, coat top flange lightly with gasket sealer and lubricate bottom end of sleeve with thick soap solution or equivalent. Push the cylinder sleeves into place by hand noting that flat on sleeve is towards the adjacent sleeve. Using a sleeve installing press, push sleeve down until firmly seated, then check sleeve protrusion above cylinder block. Normal protrusion is 0.002-0.005; if protrusion is more than 0.005, remove the sleeve and check for foreign material between flange on sleeve and recess in cylinder block.

### Late Models 770 and 880, All Models 780, 1200, 3800 and 4600 and Model 990 with 4/49 Engine

58. Cylinder bores are not sleeved. Standard bore diameter is 3.9388-3.9396. Where excessive cylinder wear has occured, cylinders can be rebored to fit the 0.020 or 0.040 oversize pistons and rings available for service.

The top of each cylinder is counterbored and fitted with a mild steel sealing ring. The sealing ring should protrude 0.002-0.005 from top of cylinder block. When reboring cylinder block, it will be necessary to remove the steel rings, then install 0.020 or 0.040 oversize sealing rings. Note: Inside diameter of sealing ring is 0.0024-0.0052 larger than standard or comparable oversize cylinder bore. Thus, when reboring cylinders, chamfer top edge slightly to avoid ridge that may interfere with piston rings when installing piston and connecting rod assemblies.

## CRANKSHAFT AND MAIN BEARINGS

### All 3-Cylinder Models

59. With engine removed, proceed as follows:

Remove crankshaft pulley and timing gear cover. Turn engine so that No. 1 piston is on compression stroke, then continue turning engine until timing marks are aligned as shown in Fig. 36. Remove the camshaft gear, crankshaft gear and engine front plate. Remove engine clutch and flywheel, then remove the two socket head screws retaining lower rear crankshaft oil seal half to upper half. Unbolt and remove oil pump, suction screen and tube assembly. Check to see that the rod and main bearing caps are identified as to location, then unbolt and remove the rod and main bearing caps and lift out crankshaft.

Standard main journal diameter is 2.4990-2.4995. Bearing inserts are available in undersizes of 0.010, 0.020 and 0.030 as well as in standard. Desired main bearing running clearance is 0.002-0.004. Crankshaft end play is controlled by thrust washers at the No. 3 main journal. Standard width of the No. 3 main journal (distance between thrust faces) is 1.624-1.626. New thrust washers are available in oversizes of 0.005 and 0.020 as well as standard. Crankshaft end play should be 0.002-0.010. When regrinding crankshaft, it is important that the original fillet radius at all journals be maintained and that they be smoothly blended into crankshaft journals.

It will be necessary to remove the crankshaft balance weights only when regrinding crankshaft. When reinstalling balance weights, always use new retaining cap screws and tab washers. Tighten the cap screws to a torque of 40 Ft.-Lbs., then check to see that there is no gap between weight and crankshaft. If a 0.002 thick feeler gage can be inserted between weight and shaft, the weights are either incorrectly installed or foreign material is between weight and shaft.

When installing front bearing cap, it is necessary that a thin film of gasket sealer be applied to the face of the cap in the area in front of the sealing ring groove in cap. Tighten the main bearing cap retaining cap screws to a torque of 120 Ft.-Lbs., then bend corners of retainers against flats on cap screw heads. Check to see that retainer on rear main bearing cap clears oil drain holes in cap by at least ⅛-inch so that drain holes will not be obstructed. Refer to paragraph 62 regarding crankshaft rear oil seal.

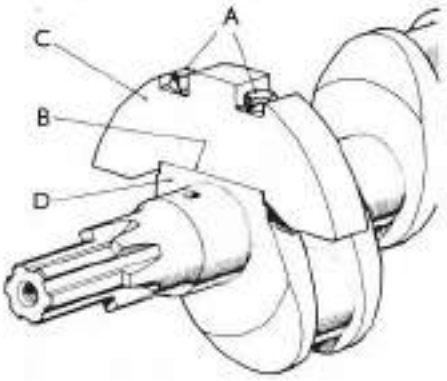


Fig. 42 — When counterbalance (C) retaining cap screws (A) are properly tightened, gap (B) between counterbalance weight and crankshaft (D) should not permit entry of 0.002 feeler gage.

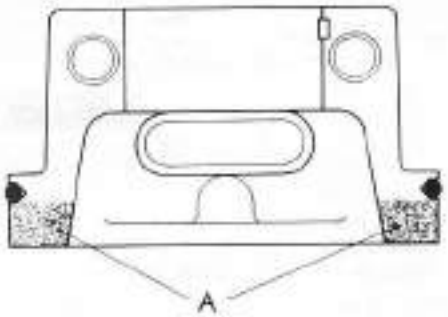


Fig. 43 — When installing front main bearing cap on three-cylinder engine, coat area at front of seal ring (indicated by shaded area "A") with a light film of gasket sealer.

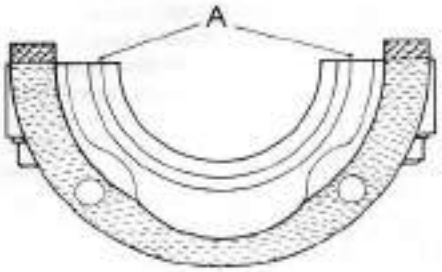


Fig. 44 — Cement gasket to halves of rear main bearing seal, or seal retainer, as shown, then using sharp blade, trim gasket flush with surface (A).

### Models 990 and 1200

60. To remove crankshaft, first remove engine from tractor, then proceed as follows:

Unbolt and remove crankshaft pulley and timing gear cover. Turn the engine so that No. 1 piston is at TDC and the timing marks on camshaft gear and crankshaft gear are towards center of idler gear. Taking care not to turn engine, unbolt and remove the clutch and flywheel. Remove the two socket head screws securing lower rear main oil seal retainer to upper half. Remove the timing gears, oil pump and lines and the engine front plate. Check to see that rod and main bearing caps have location identity numbers, then remove the caps. The crankshaft can then be removed.

Standard main journal diameter is 2.4990-2.4995. New bearing inserts are available in undersizes of 0.010 and 0.030 as well as in standard. Crankshaft end play is controlled by thrust washers at center main journal. Standard width of center main journal (distance between thrust faces) is 2.124-2.126. New thrust washers are available in oversizes of 0.005 and 0.020 as well as standard. Crankshaft end play should be 0.002-0.010. When regrinding crankshaft it is important that the original fillet radius be maintained at all journals and that the radius be smoothly blended into journals.

When reassembling, tighten main bearing retaining cap screws to a torque of 140 Ft.-Lbs., then bend corners of tab washers against the flats of cap screw heads. Refer to paragraph 62 regarding the crankshaft rear oil seal.

## CRANKSHAFT OIL SEALS

### All Models

61. **FRONT OIL SEAL.** The lip type crankshaft front oil seal is carried in the timing gear cover and it is possible to renew the seal after removing crankshaft pulley. Be sure that seal lip is towards inside of timing gear cover. On three cylinder models, a sealing "O" ring is also used between crankshaft pulley retainer washer and pulley. Seal lip rides on crankshaft pulley hub.

62. **REAR OIL SEAL.** On earlier models 770, 780, 880, 990 and 1200, crankshaft rear oil retainer incorporated a scroll pattern on inside diameter which returned oil to the crankcase. On later models, a positive type worm seal is used. The later seal retainer and seals may be installed on all earlier models. Refer to following information for installation of either type rear seal:

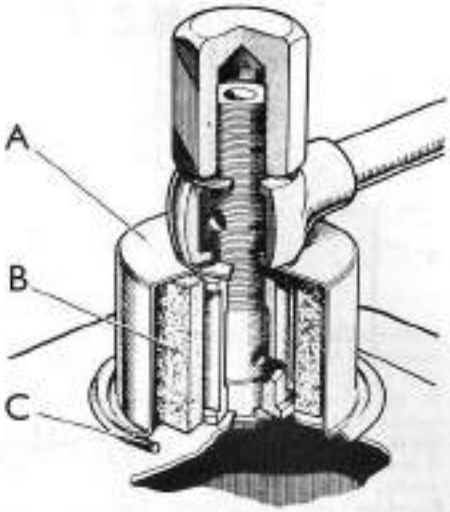


**Fig. 45 — Cut-away view of engine breather assembly. On late models with open type breather, filter element (B) is not used; refer to paragraph 63. "O" ring (C) seals breather cover (A) to rocker arm cover.**

On either type rear seal, use gasket cement to stick new gasket halves to each half of the seal or seal retainer, then cut off excess length of gasket as shown in Fig. 44.

On early type return scroll oil seal, there must be 0.008-0.012 clearance between crankshaft and the aluminum seal. Oil leakage will result if the scroll surface touches the crankshaft. After installing rear main bearing, position upper and lower seal halves around crankshaft and loosely install the four retaining cap screws. Install and tighten the two socket head cap screws securing lower seal half to upper half, center the seal so that it clears the crankshaft evenly, then tighten the four retaining cap screws.

When installing late type oil seal, carefully position each half of seal in each retainer half so that seal ends are slightly above flush with retainers. Do not trim any material from end of seal. One of the seals must be coated with gasket cement on its outer periphery to prevent movement of the seals with the crankshaft. Carefully clamp seal retainers together on crankshaft to seat the packings, then install and tighten the four retaining cap screws.

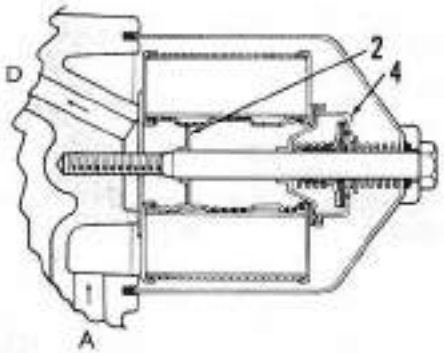


**Fig. 47 — Cross-sectional view of oil filter. When pressure difference between inlet (A) and outlet (D) exceeds 10 psi, by-pass valve (4) opens to allow unfiltered oil to flow past filter. Locating plate (2) should be tight fit on cap screw.**

Note that with either type seal, the socket heads of the two screws securing lower half to upper half must be downward.

## CRANKCASE VENTILATION SYSTEM

### All Models

63. On earlier models 770, 780, 880 and 990, a breather was mounted on top of the rocker arm cover as shown in Fig. 45 and the breather pipe was connected to the engine air cleaner at front of radiator. On all later models, the breather connection has been eliminated from the air cleaner, the breather outlet is connected to a down draft tube and the breather element (B) is no longer used. The new type breather cover and downdraft tube may be installed on earlier models providing that breather holes in rocker arm cover are increased to 7/32-inch, and that connecting hole in air cleaner body is sealed.

## ENGINE OIL FILTER

### All Models

64. A full flow, replaceable element type filter is used on all models. Recommended filter renewal is after each 250 hours of operation, to coincide with every other oil change in-

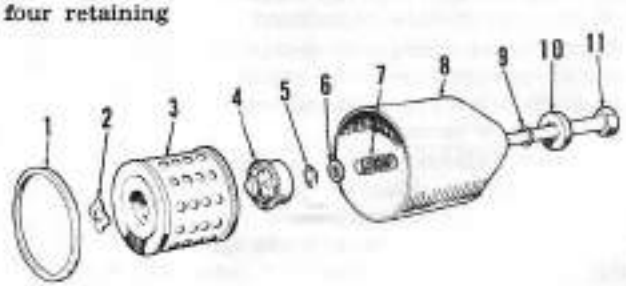


**Fig. 46 — Exploded view of oil filter. Proper installation is quite important because the by-pass valve (4) cannot operate properly if unit is not assembled as shown. On any complaint of incorrect oil pressure, the unit should be checked for proper assembly and a new filter element of correct type installed. Refer also to cross-sectional view in Fig. 47.**

terval of 125 hours, for both gasoline and diesel models.

A separate by-pass valve assembly (refer to exploded view of oil filter assembly in Fig. 46) opens when the pressure difference between filter inlet and outlet exceeds 10 psi. Therefore, when the filter element becomes clogged, the engine is supplied with unfiltered oil.

When installing new filter element, be sure that the by-pass valve, filter element and related parts are installed as shown in Fig. 46.

## OIL PUMP AND RELIEF VALVE

### All Models

65. **R&R PUMP ASSEMBLY.** To remove oil pump, first drain crankcase and remove the oil pan. Unscrew oil pressure tube nuts and remove the cap nut or loosen lock nut on pump retaining screw (2—Fig. 48 or 49). The pump can then be removed from below after removing the retaining screw from outside of cylinder block. On late model three-cylinder diesels, be careful not to lose thrust spring from counterbore in top end of oil pump drive shaft.

When reinstalling pump on model 990 or 1200, disconnect hourmeter cable at engine to facilitate installation of pump, then reconnect drive cable after pump is installed. On late three-cylinder diesels, stick thrust spring in top end of pump shaft with heavy grease prior to reinstalling pump.

66. **RELIEF VALVE.** On 3-cylinder models, the relief valve adjusting screw (10—Fig. 48), spring (8) and plunger (7) can be removed after removing oil pan and loosening locknut (9).

On models 990 and 1200, remove the oil pan and the oil suction screw (16—Fig. 49) and the wire locking adjusting screw in place. Then remove the adjusting screw (15), spring (14) and valve plunger (14).

NOTE: When removing relief valve adjusting screw, carefully count number of turns required to remove the screw so that screw can be reinstalled to same approximate adjustment.

Renew valve plunger if scored or worn. Renew pressure relief spring if free length is not approximately equal to that of new spring.

Reinstall adjusting screw to same position as when removed. If necessary to readjust relief valve, one turn of the adjusting screw will change relief pressure approximately 6 psi. Secure 3-cylinder adjusting screw with locknut and securely wire model 990 and 1200 adjusting screw through hole in pump cover.

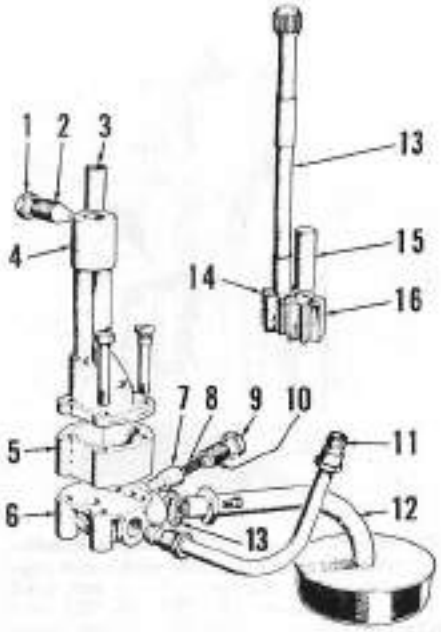


**Fig. 48 — Exploded view of oil pump for three-cylinder diesel engine. Gasoline engine oil pump is similar except for difference in drive shaft (13). Late diesel drive shaft has ¼-inch hole in top end to carry fuel injection pump drive shaft thrust spring.**

1. Lock nut
2. Set screw
3. Bushing
4. Bracket
5. Gear body
6. Cover assembly
7. Relief valve plunger
8. Relief valve spring
9. Lock nut
10. Adjusting screw
11. Pressure tube
12. Suction pipe & screen
13. Gasket

67. **OVERHAUL PUMP.** Disassembly of pump is obvious after examination of unit and with reference to Fig. 48 for 3-cylinder models or to Fig. 49 for models 990 and 1200. Refer to the following specifications:

Relief pressure with engine hot 40 psi
Gear backlash .....0.020-0.026
Gear width .....1.1855-1.1865
Housing depth .....1.1875-1.1890
Gear end float .....0.001-0.0035
Shaft diameter .....0.4895-0.490
Bushing inside diameter 0.4905-0.4925
Shaft to bushing clearance 0.0005-0.003

Bushing is pre-sized and should not require reaming if carefully installed. Be sure to align oil hole in bushing with oil hole in pump housing. Note that the drive gear (4—Fig. 49) on models 990 and 1200 and the pump driving gear (14—Fig. 48 or 9—Fig. 49) are retained to shaft by press fit only.

## OIL PAN (SUMP)

### All Models

68. Oil pan is bolted to bottom of tractor main frame and can be unbolted and removed after draining crankcase.

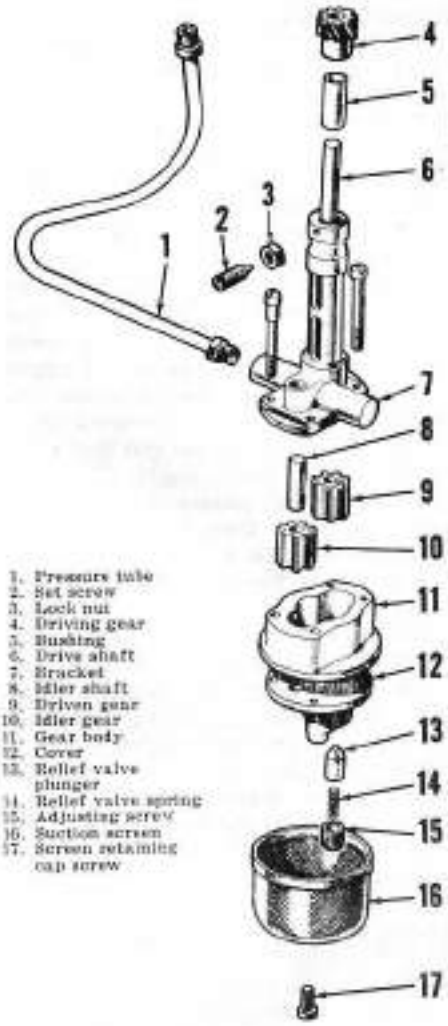


1. Pressure tube
2. Set screw
3. Lock nut
4. Driving gear
5. Bushing
6. Drive shaft
7. Bracket
8. Idler shaft
9. Driven gear
10. Idler gear
11. Gear body
12. Cover
13. Relief valve plunger
14. Relief valve spring
15. Adjusting screw
16. Suction screen
17. Screen retaining cap screw

**Fig. 49 — Exploded view of oil pump used on models 990 and 1200. Adjusting screw is secured by wire through hole in cover (12) and slot in adjusting screw.**

When reinstalling, tighten the retaining cap screws to a torque of 20 Ft.-Lbs.

## FLYWHEEL

### All Models

69. The flywheel can be unbolted and removed after removing the clutch assembly.

Starter ring gear is installed from front face of flywheel; therefore, the flywheel must be removed to renew ring gear. Heat gear with a torch from front side and knock gear off flywheel. Heat new gear evenly until gear expands enough to slip onto flywheel. Tap gear all the way around to be sure it is properly seated and allow to cool.

Flywheel is properly positioned on crankshaft by a dowel pin. Tighten flywheel retaining nuts to a torque of 50 Ft.-Lbs., then bend tabs of retainers against flats of nuts.

# GASOLINE FUEL SYSTEM

### FUEL PUMP
### Models 3800 and 4600

70. The automotive type fuel pump is actuated by an eccentric on the engine camshaft via a short push rod carried in a bore in cylinder block. When removing the fuel pump, take care not to lose the push rod as pump is being removed. Overhaul of the pump is conventional. When installing new diaphragm, hold priming lever to compress spring as cover screws are tightened.

### CARBURETOR
### Models 3800 and 4600

71. A Zenith model 34 I.V.N. carburetor is used. Parts are available from Lucas agencies.

Start engine and bring to normal operating temperature. Set idle speed stop screw to obtain a slow idle speed of 500 RPM. Turn idle mixture needle in until engine speed starts to drop, then back needle out ½-turn. Main fuel mixture is not adjustable.

Zenith information on the carburetor is as follows:

Idle jet .....016354/45
Idle adjusting needle .....020484/15
Compensating jet .....012572/95
Main jet .....012571/95
Float chamber gasket .....B16819Z
Float .....B17001Z
Diaphragm gasket .....010270
Diaphragm .....016127

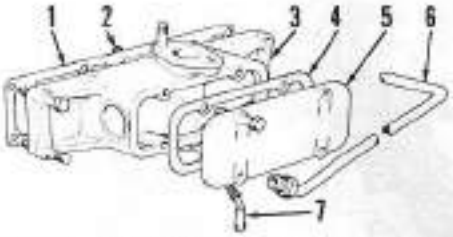


**Fig. 50 — Gasoline engine intake manifold is heated by hot water. Tube (6) connects manifold to water pump and "O" ring (2) seals water passage to cylinder head. A ball check valve in drain tube (7) allows gasoline overflow from carburetor to drain from manifold. Later models will have a coiled drain tube instead of ball check valve. Be sure that neither the valve or tube is choked.**

1. Gasket
2. "O" ring
3. Intake manifold
4. Gasket
5. Manifold cover
6. Water tube
7. Drain (gasoline)

# DIESEL FUEL SYSTEM

The diesel fuel system consists of three basic components: the fuel filters, injection pump and injection nozzles. When servicing any unit associated with the fuel system, the maintenance of absolute cleanliness is of utmost importance. Of equal importance is the avoidance of nicks or burrs on any of the working parts.

Probably the most important precaution that service personnel can impart to owners of diesel powered tractors is to urge them to use an approved fuel that is absolutely clean and free from foreign material. Extra precaution should be taken to make certain that no water enters the fuel storage tanks.

### TROUBLESHOOTING
### All Diesel Models

72. If the engine will not start, or does not run properly after starting, refer to the following paragraphs for possible causes of trouble.

73. **FUEL NOT REACHING INJECTION PUMP.** If no fuel will run from line when disconnected from pump, check the following:

- Be sure fuel supply valve is open.
- Check the filters for being clogged (Including filter screen in fuel lift pump).
- Bleed the fuel filters.
- Check lines and connectors for damage.

74. **FUEL REACHING NOZZLES BUT ENGINE WILL NOT START.** If, when lines are disconnected at fuel nozzles and engine is cranked, fuel will flow from connections, but engine will not start, check the following:

- Check cranking speed.
- Check throttle control and engine stop control adjustments.
- Check pump timing.
- Check fuel lines and connections for pressure leakage.
- Check engine compression.

75. **ENGINE HARD TO START.** If the engine is hard to start, check the following:

- Check cranking speed.
- Bleed the fuel filters.
- Check for clogged fuel filters.
- Check for water in fuel or improper fuel.
- Check for air leaks on suction side of transfer pump. (Models with C.A.V. pump).
- Check engine compression.

76. **ENGINE STARTS, THEN STOPS.** If the engine will start, but then stops, check the following:

- Check for clogged or restricted fuel lines or fuel filters.
- Check for water in fuel.
- Check for restrictions in air intake.
- Check engine for overheating.
- Check for air leaks in lines on suction side of transfer pump (models with C.A.V. pump).

77. **ENGINE SURGES, MISFIRES OR POOR GOVERNOR REGULATION.** Make the following checks:

- Bleed the fuel system.
- Check for clogged filters or lines or restricted fuel lines.
- Check for water in fuel.
- Check pump timing.
- Check injector lines and connections for leakage.
- Check for faulty or sticking injector nozzles.
- Check for faulty or sticking engine valves.

78. **LOSS OF POWER.** If engine does not develop full power or speed, check the following:

- Check throttle control rod adjustment.
- Check maximum no-load speed adjustment.
- Check for clogged or restricted fuel lines or clogged fuel filters.
- Check for air leaks in suction line of transfer pump.
- Check pump timing.
- Check engine compression.
- Check for improper engine valve gap adjustment or faulty valves.
- Check maximum no-load speed adjustment.

79. **EXCESSIVE BLACK SMOKE AT EXHAUST.** If the engine emits excessive black smoke from exhaust, check the following.

- Check for restricted air intake such as clogged air cleaner.
- Check pump timing.
- Check for faulty injectors.
- Check engine compression.
- Check to see that manual retard screw is open on models with C.A.V. pump.
- Check to see that excess fuel delivery device is disengaged on model 1200.

### FUEL FILTERS
### All Diesel Models

80. **MAINTENANCE.** The fuel filter base is fitted with two renewable type elements. Primary and final filter elements are identical; primary filtration is through front element on 3-cylinder models and rear element on models 990 and 1200. The primary element

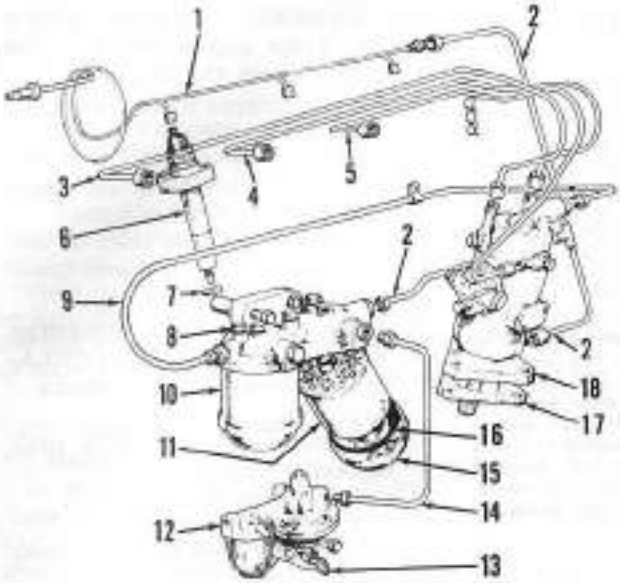


**Fig. 51 — Drawing showing lay-out of diesel fuel system for all 3-cylinder diesel engines. Fuel lift pump provides fuel under pressure to inlet side of primary filter (11); however, return line (2) is connected to outlet side of primary filter so that final filter inlet pressure is by gravity only. Thus, disconnecting return line (2) from injector leak-off line (1), then plugging return line (2) will facilitate bleeding system.**

should be renewed at regular intervals, but the final filter element should require renewal only occasionally. Filter service life will be determined by condition of the fuel. Fuel that is clean and free of water should allow approximately 500 hours of use on primary element and about two years on final filter element. With contaminated fuel, service life of the filter elements will be considerably reduced.

To renew filter element(s), clean outside of filter assembly, then remove cap screw from upper side of base that is threaded into filter element cover. Remove cover and element, discard element, rubber sealing rings and cap screw sealing washer and throughly flush base and cover with clean diesel fuel. Install new element using new rubber sealing rings and cap screw sealing washer; make sure the rubber sealing rings are properly positioned in base and cover before tightening cap screw. Clean the fuel lift pump sediment bowl and filter screen, then bleed the fuel system as outlined in following paragraph 81, 82 or 83.

## BLEEDING FUEL SYSTEM

### Models 770, 780 and 880

81. Make sure fuel tank contains at least two gallons of fuel, open fuel supply valve, refer to Figs. 51 and 52 and proceed as follows:

Turn engine, if necessary, so that primer lever (13—Fig. 51) will operate fuel lift pump (12). Open filter bleed screw (8). Note: On C.A.V. filter with three bleed screws, this is screw nearest filter to injection pump line (9); Purolator filter has only one bleed screw. Actuate primer lever until fuel flows freely without trace of air bubbles from bleed screw opening. While maintaining flow of fuel with primer lever, tighten bleed screw (8). Refer to Fig. 52, open bleed screw (B) and actuate primer until air free fuel flows from bleed opening. Tighten the bleed screw (B) while maintaining flow of fuel with primer lever, then repeat this operation with bleed screw (A) in pump cover. Tighten bleed screw (A) and loosen the fuel line to injector nuts. Be sure stop control is in run position and open throttle. Crank engine until fuel is ejected at all fuel injector connections and then tighten the connections. Engine is now ready to start using normal starting procedure.

### Model 990

82. To bleed fuel system, there must be a minimum of two gallons of fuel in tank. Open the fuel supply valve, refer to Figs. 53 and 54, then proceed as follows:

Turn engine, if necessary, so that primer lever (20—Fig. 53) will operate fuel lift pump. Loosen bleed screw (15) in filter. Note: On C.A.V. filter with three bleed screws, this is screw nearest fuel injection pump supply line (16); Purolator filter has only one bleed screw. Actuate primer until

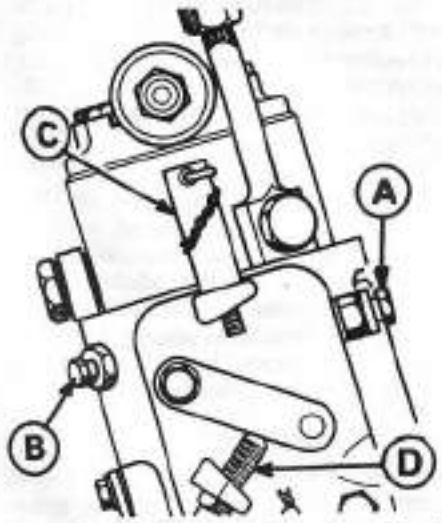


**Fig. 52—Plug (B) located on pump bleeds the high pressure side of pump while plug (A) located in governor housing bleeds governor and drive cavity. Refer to text for bleeding procedure. High idle speed screw is located at (C); low idle speed screw is (D).**

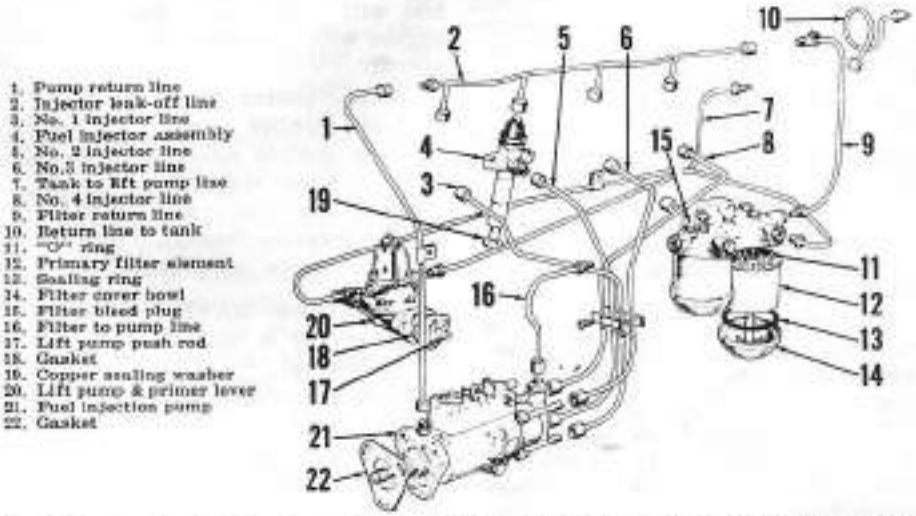


**Fig. 53 — Drawing showing lay-out of model 990 fuel injection system. Fuel lift pump (20) is located on right side of engine; the fuel filter and fuel injection pump are located on left side of engine. Return line (10) returns flow of fuel from pump return line (1), injector leak-off line (2) and filter return line (9) to fuel tank. An assistant to operate primer lever (20) while bleeding the fuel system will be helpful.**

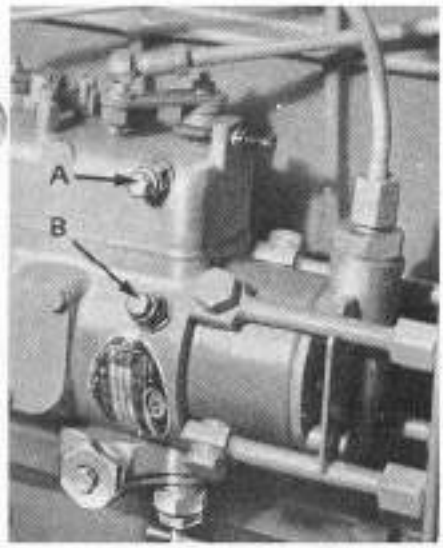


Fig. 54 — Model 990 fuel injection pump bleed screws. Governor and drive component cavity is bled by plug (A); bleed plug (B) is for high pressure side of pump.

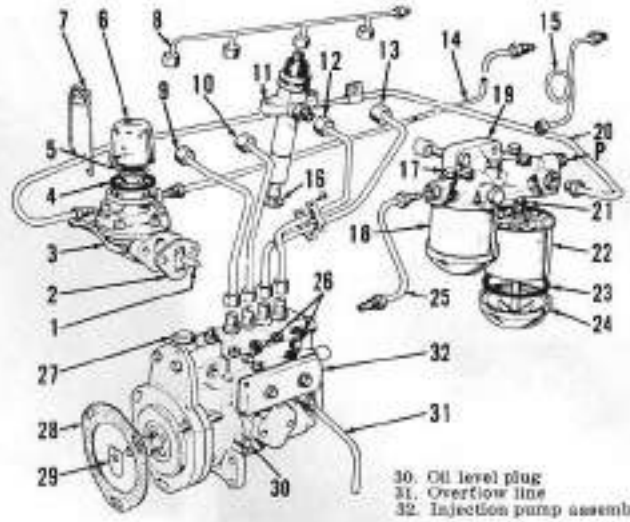


Fig. 55 — Drawing showing lay-out of model 1200 fuel system, showing complete pressurized filter unit. At tractor serial No. 705005, plug (P) was deleted from filter base and a bleed line similar to that shown for model 990 in Fig. 53 was fitted. The new bleed lines may be installed on earlier tractors. Fuel lift pump is on right side of engine; filters and injection pump are located on left side. Injection pump cambox lubricant should be changed at regular intervals; refer to paragraph 97.

fuel flows freely with no air bubbles from the bleeder opening. Tighten the bleed screw while maintaining flow of fuel with lift pump. Refer to Fig. 54 and repeat bleeding operation, first with bleed screw (B) on pump body, then with bleed screw (A) on pump governor housing. Loosen fuel injector line connections at fuel injectors, be sure stop control is in run position and that throttle is wide open. Crank engine until fuel ejects from all fuel injector line connections, then tighten the connections. Engine is now ready to start.

## Model 1200

83. Check to see that fuel tank contains at least two gallons of fuel, open the fuel supply valve and refer to Figs. 55 and 56. Turn engine, if necessary, so that primer lever (3—Fig. 55) will operate fuel lift pump. Loosen bleed screw (17) on filter base. Note: If equipped with C.A.V. filter with three bleed screws, open screw nearest filter outlet to injection pump line (25); Purolator filter has only one bleed screw. Operate primer lever until fuel flows freely with no trace of air bubbles from the bleed screw opening. Tighten the bleed screw while maintaining flow of fuel with primer lever. Open the bleed screws (H—Fig. 56), then operate primer lever until air free fuel flows from both bleeder openings and tighten bleeder screws while maintaining flow of fuel. Loosen the fuel injector line connections at injectors, be sure stop control is in run position and move throttle to wide open position. Crank engine until fuel is ejected from all injector line connections, then tighten the connections. Start engine using normal procedure.

Fig. 56 — Model 1200 (Simms) fuel injection pump assembly, showing service points.

A. Lubricant drain plug
B. Lubricant filler plug
C. Lubricant level plug
D. Maximum fuel delivery stop screw
E. High idle speed stop screw
F. Slow idle speed stop screw
G. Engine stop lever
H. Bleed screws
J. Excess fuel delivery button
K. Overflow pipe

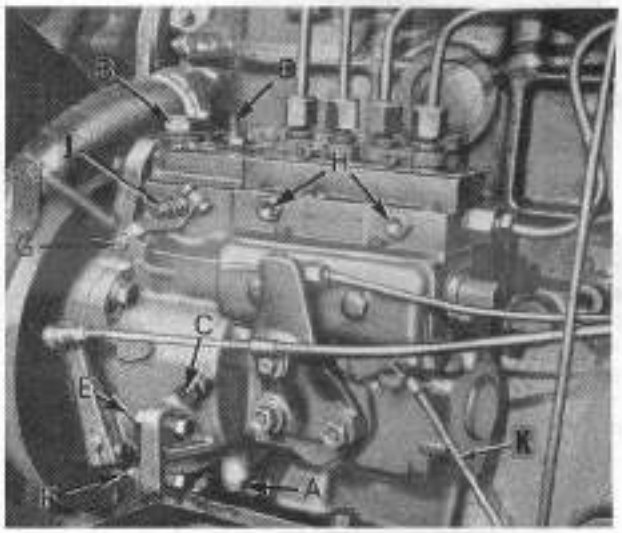


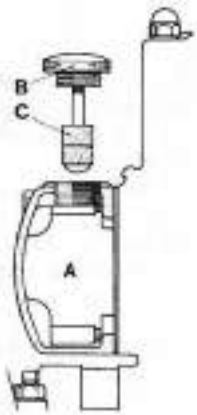


Fig. 57 — Cross-sectional view of ether starting aid plug in diesel intake manifold. Plastic plug (B) has felt (C) which is suspended in intake manifold cavity (A); refer to paragraph 84.

## COLD WEATHER STARTING AIDS

### All Models

84. **ETHER STARTING PLUG.** For use in temperatures below 0° F., remove the plastic plug from intake manifold (see Fig. 57), dip the felt attached to plug in ether, reinstall plug and immediately crank engine. CAUTION: Do not add ether in excess of that which is absorbed by the felt; serious damage can be caused by excessive use of ether.

### Models With C.A.V. Fuel Injection Pump

85. **MANUAL RETARD DEVICE.** Refer to Fig. 58; turning the manual retard screw in will keep the injection timing from advancing as the engine is being cranked. As soon as the engine is running, back the screw out to fully open position; otherwise, erratic running, excessive smoke and lack of power will occur. Note: Do not turn the manual retard screw in immediately after an unsuccessful attempt to start engine; wait for about 20 seconds to allow pressure inside the

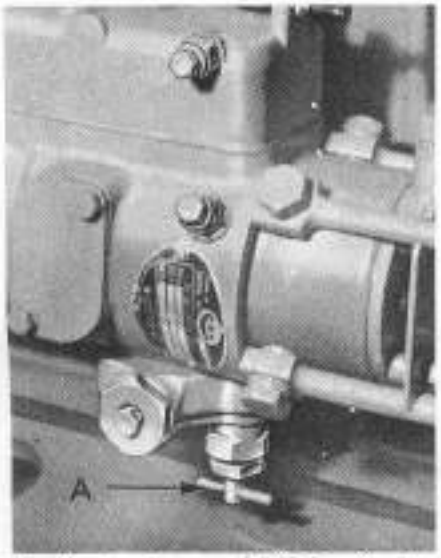


Fig. 58 — Turning screw (A) in will close off pressure passage to advance piston, thus keeping pump timing retarded as starting aid. Screw must be in fully open position when engine is running.

pump to fall and the advance piston to return to retard position.

### Model 1200 (Simms Fuel Injection Pump)

86. **EXCESS FUEL DELIVERY DEVICE.** Refer to Fig. 56. Move throttle to wide open position and depress excess fuel delivery button (J) which will allow pump rack to by-pass the normal fuel stop position, allowing pump to deliver excess amount of fuel when cranking engine. As soon as engine starts, the spring loaded button will disengage and return to normal position.

## FUEL LIFT PUMP

### All Models

87. The automotive type fuel pump is actuated by an eccentric on the engine camshaft via a short push rod carried in a bore in cylinder block. When removing the fuel pump, take care not to lose the push rod as pump is being removed. Overhaul of the pump is conventional. When installing new diaphragm, hold priming lever to compress spring as the cover screws are tightened.

## FUEL INJECTION PUMP

### All 3-Cylinder Models

88. Providing that the injection pump drive gear to camshaft timing (see paragraph 90) has not been disturbed, the C.A.V. fuel injection pump is properly timed when timing mark on pump housing is aligned with timing mark on drive housing flange as shown in Fig. 59. If the pump drive gear has been removed, refer to paragraph 90.

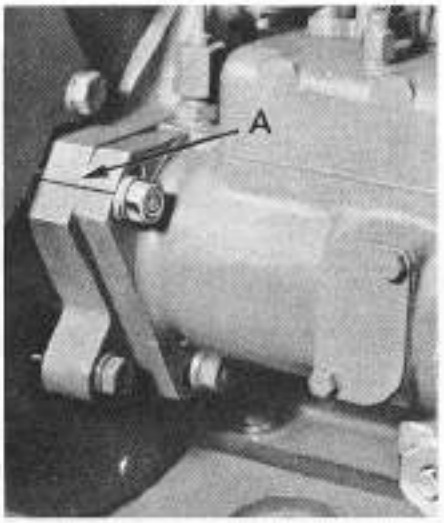


Fig. 59 — View showing C.A.V. fuel injection pump timing marks. Model 990 with 4/47 engine is shown; timing marks for other engines are similar.

89. **R&R FUEL INJECTION PUMP.** Thoroughly clean pump, lines and surrounding area. Disconnect throttle and fuel shut-off controls. Remove fuel injector lines and disconnect fuel inlet and return lines from pump. Immediately cap all openings. Unbolt and remove pump from drive housing. The splined drive shaft may be lifted out with pump; if so, take care not to drop the shaft. Remove shaft and on late models, remove thrust spring from bore in end of oil pump shaft.

To reinstall pump, first install the thrust spring (late models only) in bore in top end of oil pump shaft, then insert splined (quill) shaft in drive gear with chamfered end up. Install the pump using a new gasket, align the timing marks as shown in Fig. 59, then tighten pump retaining nuts. Reconnect the fuel lines leaving injector line connections loose at the injectors. Install throttle and stop controls and bleed the fuel system as outlined in paragraph 81.

90. **FUEL INJECTION PUMP DRIVE GEAR.** Refer to Fig. 61 for exploded view of fuel injection pump drive gear and related parts and to Fig. 62 for cross-sectional view.

To remove the drive gear and housing assembly, first remove fuel injection pump, splined (quill) shaft and, if so equipped, the drive shaft thrust spring as outlined in paragraph 89, then lift the gear and housing assembly from cylinder block.

To disassemble unit, remove snap ring (7) from top end of gear (11) and press gear downward out of housing. Remove the caged needle roller roller bearing (10) and lower ball

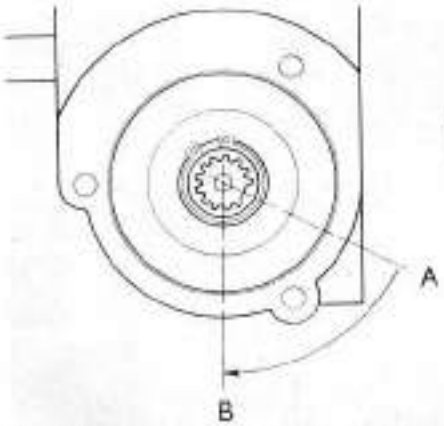


Fig. 60 — View showing timing of 3-cylinder diesel injection pump drive gear to camshaft; refer to paragraph 90.

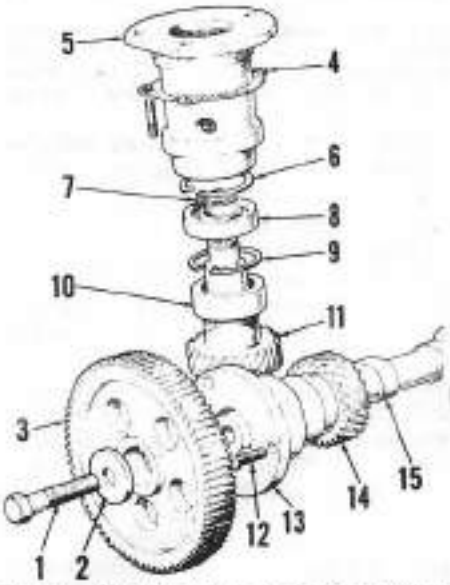


Fig. 61 — Exploded view of 3-cylinder diesel injection pump drive gears; refer to Fig. 62 for cross-sectional view and to Fig. 60 for retiming pump drive gear to camshaft.

1. Cap screw
2. Washer
3. Camshaft gear
4. Gasket
5. Drive gear housing
6. Snap ring
7. Snap ring
8. Bearing
9. Snap ring
10. Needle bearing
11. Pump drive gear
12. Cap screw
13. Camshaft bearing
14. Injection pump camshaft gear
15. Engine camshaft

bearing snap ring (9) from housing, then press ball bearing (8) down out of housing. When reassembling, install new ball bearing (8) first, then install retaining snap ring (9) and press new needle roller bearing into position. Note: Use a sleeve that will contact outer edge of bearing race only and press against lettered side of cage when installing bearing. Do not drive the needle bearing into place.

To install gear and housing assembly, first remove rocker arm cover and turn engine until No. 1 piston is on compression stroke, then continue turning engine until timing pin will

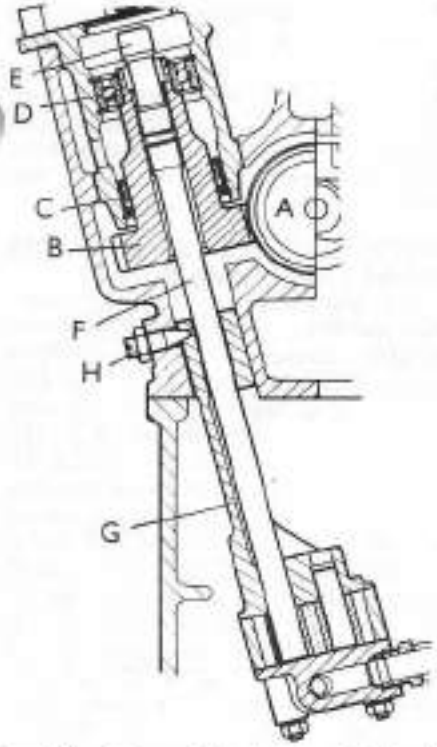


**Fig. 62 — Cross-sectional view of 3-cylinder diesel injection pump drive. On late production, engine oil pump shaft (F) is counterbored at top end and fitted with thrust spring to hold fuel injection pump shaft (E) in proper position.**

A. Camshaft pump drive gear
B. Drive gear
C. Needle roller bearing
D. Ball bearing
E. Injection pump drive shaft
F. Oil pump drive shaft
G. Oil pump housing
H. Oil pump retaining screw

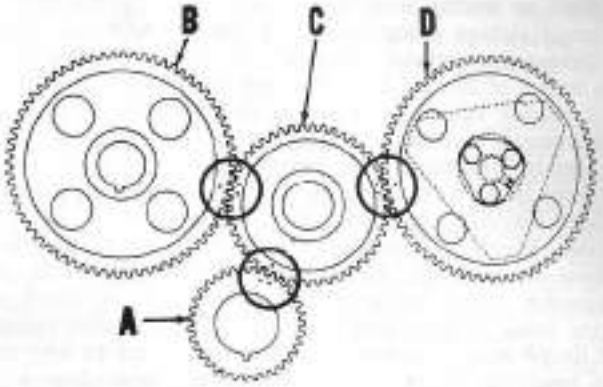


**Fig. 63—View showing 4-cylinder diesel injection pump drive gear and idler gear timing marks.**

A. Crankshaft gear
B. Camshaft gear
C. Idler gear
D. Injection pump drive gear

drop into detent in flywheel through TDC hole in housing. Refer to Fig. 60 and install gear and housing with master spline at "4 o'clock" position (A); as the gear engages with drive gear on camshaft, the master spline should move to "6 o'clock" position (B). Note: If not possible to position gear at exact "6 o'clock" position, use tooth mesh that will position master spline at just after this timing position. With fuel injection pump drive gear properly meshed with camshaft gear, reinstall fuel injection pump as outlined in paragraph 89.

## Model 990 with AD4/47 Engine (Pump Mounted on Drive Housing)

91. **PUMP TIMING.** Providing that pump drive gear or idler gear have not been disturbed, pump is timed when timing mark on pump housing is aligned with mark on drive housing as shown in Fig. 59. If pump drive gear, idler gear or crankshaft gear have been removed, refer to paragraph 46.

92. **R&R FUEL INJECTION PUMP.** Thoroughly clean pump, lines and surrounding area. Disconnect throttle and engine stop controls from pump. Remove the fuel injector lines and disconnect fuel supply and return lines, then immediately cap all openings. Unbolt and remove the pump assembly. Note: The splined drive shaft may be removed with pump; take care not to drop the shaft.

To reinstall pump, first install the splined (quill) shaft with chamfered end out. Reinstall pump using a new gasket and with timing marks aligned as shown in Fig. 59. Reconnect controls and lines, leaving fuel injector lines loose at injectors. Bleed the fuel injection pump as outlined in paragraph 82, then tighten the connections.

## Model 990 with 4/49 Engine (Pump Mounted on Engine Front Plate)

92A. **PUMP TIMING.** Pump is properly timed when timing mark on fuel injection pump housing is aligned with mark on engine front (carrier) plate, and when pump drive gear is properly timed with engine timing gears. Pump is timed during installation as outlined in following paragraph 94 or 95.

93. **R&R FUEL INJECTION PUMP.** Method for removing and reinstalling fuel injection pump will depend on type of engine timing gear cover. If there is no fuel pump gear cover on front side, refer to paragraph 94. Where fuel pump gear cover is fitted on timing gear cover, refer to paragraph 95.

94. First, remove timing gear cover as outlined in paragraph 44, then proceed as follows: Disconnect throttle and engine stop controls. Remove fuel injector lines and disconnect fuel supply line, then immediately cap all openings. Turn engine until timing marks on engine camshaft gear and fuel injection pump drive gear are towards center of idler gear and so that timing pin will enter detent in flywheel through TDC timing hole. Remove the idler gear shaft support bracket and idler gear, reinstall gear so that all timing marks are aligned as shown in Fig. 63 and reinstall support bracket. Note: Take care not to lose any shims between support and engine front plate. Straighten tab washer and remove the three cap screws, tab washer and gear. The pump can then be unbolted and removed from engine front plate.

Reinstall pump as follows: Mount pump onto engine front plate, then reinstall drive gear with timing marks aligned with idler gear timing marks as shown in Fig. 63. Tighten the gear retaining cap screws to a torque of 20 Ft.-Lbs., then bend tabs of washer against flats of cap screw heads. Reinstall timing gear cover as outlined in paragraph 44. Reconnect throttle and engine stop controls and the fuel lines, leaving fuel injector line connections loose at injectors. Bleed fuel system as outlined in paragraph 82, then tighten fuel injector line connections.

95. On models with timing gear cover fitted with fuel injection pump drive gear plate, proceed as follows: Disconnect battery ground cable so engine will not be turned. Unbolt and remove pump drive gear cover plate, clean the pump drive gear and idler gear face and place a timing mark across the gears with felt tip pen or other marking device. Disconnect throttle and engine stop controls from pump. Disconnect fuel supply and return lines from pump and remove the fuel injector lines, then immediately cap all openings. Straighten the tab washer and unbolt pump drive gear from pump hub. Unbolt and remove pump from engine front plate leaving the drive gear in timing gear housing.

To reinstall pump, match the timing marks applied to fuel pump drive gear and idler gear, then mount pump on engine front plate and install gear retaining washer and cap screws. Rotate pump so that timing mark on pump housing is aligned with timing

mark on engine front plate and securely tighten pump mounting bolts. Tighten gear retaining cap screws to a torque of 20 Ft.-Lbs. and bend tabs of washer against cap screw heads. Reconnect throttle and engine stop controls. Reconnect fuel supply and return lines and reinstall injector lines, leaving connectors at injectors loose. Bleed the fuel system as outlined in paragraph 82. Reinstall fuel injection pump cover and start engine using normal procedure. NOTE: If timing marks were not applied prior to removing pump, it is possible to move the gears out of time when removing or installing pump; therefore follow procedure in paragraph 94 to reinstall pump.

### Model 1200

96. **PUMP TIMING.** Providing that mesh position of the pump drive gear and idler gear are correct, the fuel injection pump is properly timed when the timing marks on pump housing and engine front (carrier) plate are aligned. Refer to paragraph 46 regarding timing of idler and fuel injection pump drive gears.

97. **LUBRICATION.** The Simms fuel injection pump is lubricated by oil sump in the pump cam box. After each 500 hours of operation, the pump should be drained and refilled to proper level with new, clean engine oil. Use same weight and type oil as for engine crankcase. Refer to Fig. 56 for location of drain plug (A), oil level plug (C) and filler plug (B).

Whenever installing a new or rebuilt fuel injection pump, be sure the cambox is filled with engine oil to level of the oil level plug (C) before attempting to start engine. There will be some oil dilution with diesel fuel during engine operation and after engine has been shut off, some of the fuel-oil mixture may run from outlet tube (K).

98. **R&R FUEL INJECTION PUMP.** Procedure for removal of the fuel injection pump will depend on type of timing gear cover. If cover is solid with no opening at front side of fuel injection pump gear, remove pump as outlined in paragraph 99. Where timing gear cover is fitted with removable plate at front side of fuel injection pump drive gear, pump may be removed and reinstalled as outlined in paragraph 100.

99. Remove timing gear cover as outlined in paragraph 43, then proceed as follows: Turn engine so that timing marks on camshaft gear, crankshaft gear and fuel injection pump drive gear are towards center of idler gear. Remove idler gear shaft support bracket and idler gear, then reinstall gear so that all timing marks are aligned as shown in Fig. 63 and reinstall shaft support bracket. Thoroughly clean fuel injection pump, lines and surrounding area. Disconnect throttle and engine stop controls from pump. Disconnect fuel supply line and remove the fuel injector lines, then immediately cap all openings. Straighten tab washer and remove nut from pump camshaft. Using pullers, remove pump drive gear taking care not to lose the Woodruff key. Unbolt and remove pump assembly from engine.

To reinstall pump, mount pump on engine front (carrier) plate with timing marks on pump housing and plate aligned. Install drive gear with Woodruff key, new tab washer and nut so that timing mark on drive gear is aligned with timing mark on idler gear. Tighten the nut to a torque of 45 Ft.-Lbs., then bend tabs of washer against flats on nut. Reinstall timing gear cover as outlined in paragraph 43. Reconnect throttle and engine stop controls and the fuel lines to fuel injection pump, leaving fuel injector line to injector connections loose. Bleed fuel system as outlined in paragraph 83, then start engine using normal procedure.

100. On models with timing gear cover having opening and access plate at front side of fuel injection pump drive gear, remove pump as follows:

Thoroughly clean pump, lines and surrounding area. Disconnect throttle and engine stop control from pump. Disconnect fuel supply line from pump and remove the fuel injector lines, then immediately cap all openings. Remove cover plate from front side of timing gear cover, clean the pump drive gear and idler gear and using a felt tip pen or other marking device, place timing marks on idler gear and pump gear. Straighten the tab washer and remove nut from injection pump camshaft. Using suitable pullers, loosen pump drive gear from tapered camshaft. Unbolt and remove fuel injection pump, taking care not to lose the Woodruff key from camshaft.

To reinstall pump, align keyway in camshaft with keyway in pump drive gear when gear is meshed with applied timing marks aligned. Mount pump on engine front (carrier) plate so that timing marks on pump housing and plate are aligned, taking care not to dislodge Woodruff key from shaft and to keep timing marks on gears aligned. Reinstall nut with new tab washer, tighten nut to a torque of 45 Ft. Lbs. and bend tab against nut. Reinstall cover plate on timing gear cover. Reconnect throttle and engine stop controls. Reconnect fuel lines, leaving connections loose at the fuel injectors. Bleed fuel system as outlined in paragraph 83, then start engine using normal procedures. Note: Refer to paragraph 97 regarding fuel injection pump lubrication.

## DIESEL GOVERNOR ADJUSTMENTS

### Model 1200 (Simms Pump)

101. Start engine and bring to normal operating temperature. Disconnect throttle linkage from fuel injection pump governor arm and hold the arm so that stop lever contacts the slow idle speed stop screw (see Fig. 56). If engine speed is not then within the range of 650-700 RPM, loosen the lock nut on stop screw and turn screw in or out until proper slow idle speed is obtained and tighten lock nut. Hold the arm so that stop lever is against the high idle (maximum) speed stop screw; engine high idle speed should then be 2425-2475 RPM. If high idle speed is not within the specified range the stop screw should be adjusted. CAUTION: The high idle (maximum) speed stop screw adjustment is sealed with a sealing wire at the factory; this seal should not be broken by anyone other than David Brown or Simms authorized diesel service personnel if tractor is within factory warranty. To adjust high idle speed, break wire seal, loosen lock nut and turn adjusting screw in or out until proper speed is obtained; then, tighten lock nut and reseal adjusting screw. Reconnect throttle linkage. The throttle lever quadrant stops should be adjusted so that throttle lever just contacts the stops as control lever on fuel injection pump comes in contact with speed adjustment screws.

### All Other Diesel Models (C.A.V. Pump)

102. To check idle speed adjustments proceed as follows: Start engine and bring to normal operating temperature. Disconnect throttle linkage from governor arm on fuel injection pump. Hold the governor arm against the slow idle speed stop screw; slow idle speed should then be 650-700 RPM. If not, loosen the lock nut on the slow speed stop screw (D—Fig. 52) and turn the screw in or out to obtain proper slow idle speed, then tighten the lock nut. Hold the injection pump governor arm against the high idle (maximum) speed stop screw; engine speed should then be 2125-2175 RPM on model 770 or 2325-2375 on other models. If not within specified speed range, the high idle speed stop screw should be adjusted. CAUTION: The high idle speed stop screw is sealed

at the factory with a sealing wire and cover tube (C—Fig. 52); this seal should not be broken on tractors within factory warranty by other than David Brown or C.A.V. authorized diesel service personnel. To adjust high idle speed, break the wire seal, remove the cover tube and loosen the lock nut on adjusting screw; then, turn screw in or out to obtain specified high idle speed, tighten lock nut and reseal the screw. Reconnect throttle linkage. The throttle lever quadrant stops should be adjusted so that lever just contacts the stops as control lever on pump comes in contact with the speed adjusting screws.

## FUEL INJECTORS

### All Models

All models are equipped with a direct type fuel injection system. The injectors each have four spray orifices. Orifice diameter is 0.23 mm (0.009 inch) on model 770, 0.27 mm. (0.015 inch) on model 880 with 3/40 engine and 0.30 mm. (0.012 inch) on other models.

CAUTION: When testing nozzles, fuel is ejected with sufficient force to penetrate the skin which could cause blood poisoning. When testing nozzles, keep clear of nozzle spray.

103. **LOCATING A FAULTY NOZZLE.** If rough or uneven engine operation, or misfiring, indicates a faulty injector, the defective unit can usually be located as follows:

With engine running at low idle speed, loosen the high pressure connection at each injector in turn. As in checking spark plugs, the faulty unit is the one which, when its line is loosened, least affects the running of the engine.

If a faulty nozzle is found and considerable time has elapsed since the injectors have been serviced, it is recommended that all injectors be removed and serviced or that new or reconditioned units be installed.

104. **REMOVE AND INSTALL INJECTORS.** Before loosening any lines, wash the nozzle holder and connections with clean diesel fuel or kerosene. After disconnecting the high pressure and leakoff lines, cover open ends of connections with composition caps to prevent the entrance of dirt or other foreign material. Remove the nozzle holder stud nuts and carefully withdraw the nozzles from cylinder head, being careful not to strike the tip end of nozzle against any hard surface.

Thoroughly clean the nozzle recess in the cylinder head before reinstalling the nozzle and holder assembly. Use only wood or brass cleaning tools

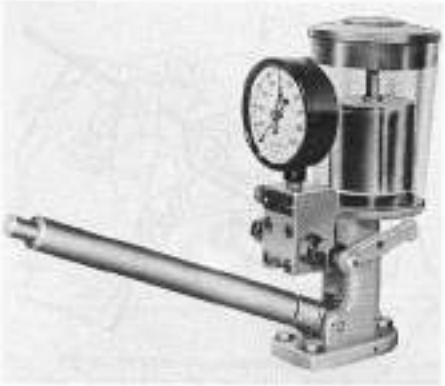

**Fig. 64 — An injector tester is necessary to check condition of nozzle and adjust injector pressure setting.**

to avoid damage to seating surfaces and make sure the recess is free of all dirt and carbon. Even a small particle could cause the unit to be cocked and result in a compression loss and improper cooling of the fuel injector.

When reinstalling the injector, always renew the copper gasket. Torque each of the two nozzle holder stud nuts in 2 Ft.-Lb. increments until each reaches the final torque of 9-12 Ft.-Lbs. This method of tightening will prevent holder from being cocked in the bore.

105. **NOZZLE TESTING.** A complete job of testing and adjusting the nozzle requires the use of a special tester as shown in Fig. 64. Use only clean, approved testing oil in the tester tank. Operate the tester lever until oil flows; then, attach injector to tester and make the following tests:

106. OPENING PRESSURE. Close gage valve and operate tester lever several times to clear all air from the injector. Then open gage valve and while slowly operating tester lever, observe the pressure at which the injection spray occurs. This gage pressure should be 2575 psi. If the gage pressure is not as specified, remove the cap nut (A—Fig. 65), loosen the lock nut (C) and turn adjusting screw (D) in or out as required to increase or decrease opening pressure. If opening pressure cannot be adjusted to 2575 psi, overhaul nozzle as outlined in paragraph 110. Note: On new injector assemblies or if new spring is installed, adjust opening pressure to 2725 psi.

107. SPRAY PATTERN. Operate the tester handle slowly and observe the spray pattern. All four sprays must be similar and spaced equidistantly in in a nearly horizontal plane. Each spray must be well atomized and should spread into a 1 inch cone at a 3 inch distance from the injector tip. If spray pattern is not as described, overhaul the nozzle as outlined in paragraph 110. Note: Rapid operation of the tester lever will frequently produce a spray pattern as described even if the injector is faulty. Be sure to operate the tester lever as slowly as possible and still cause the nozzle to open.

108. SEAT LEAKAGE. Wipe nozzle tip dry with clean blotting paper; then, operate tester handle to bring gage pressure to 2425 psi and hold this pressure for five seconds. If any fuel appears on nozzle tip, overhaul injector as outlined in paragraph 110.

109. NOZZLE LEAK BACK. Operate the tester handle to bring gage pressure to 2200 psi, then note time required for gage pressure to drop to 1500 psi. This time should be between 6 and 24 seconds.

If elapsed time is not as specified, nozzle should be cleaned or overhauled as outlined in paragraph 110. Note: A leaking tester connection, check valve or pressure gage will show up in this test as excessively fast leak back. If, in testing a number of injector nozzles, all fail to pass this test, the tester rather than the injectors should be suspected.

110. **OVERHAUL.** Hard or sharp tools, emery cloth, crocus cloth, grinding compounds or abrasives of any kind should NEVER be used in the cleaning of nozzles.

Wipe all dirt and loose carbon from the injector assembly with a clean, lint free cloth. Carefully clamp injector assembly in a soft jawed vise or injector fixture and remove the protecting cap (A—Fig. 65). Loosen the

A. Cap
B. Copper washers
C. Lock nut
D. Adjusting screw
E. Spring
F. Spindle
G. Injector body
H. Fuel inlet
I. Nozzle retaining cap
J. Injector nozzle
K. Needle

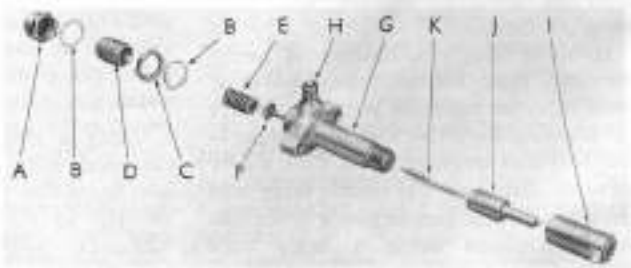


**Fig. 65 — Exploded view of typical fuel injector assembly. Refer to Fig. 66 for cross-sectional view.**

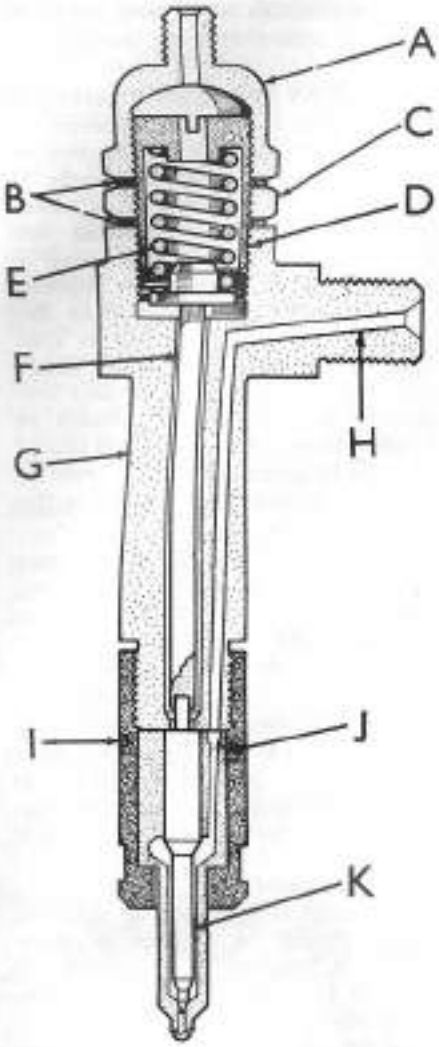


Fig. 66 — Cross-sectional view of injector assembly. Refer to Fig. 65 for exploded view and legend.

jam nut (C) and back off the adjusting screw (D) enough to relieve the load from spring (E). Remove the nozzle cap nut (I) and nozzle assembly (J and K). Normally, the nozzle valve needle can easily be withdrawn from the nozzle body. If it cannot, soak the assembly in fuel oil, acetone, carbon tetrachloride or similar carbon solvent to facilitate removal. Be careful not to permit the valve or body to come in contact with any hard surface.

If more than one injector is being serviced, keep the component parts of each injector separate from the others by placing them in a clean compartmented pan covered with fuel oil or solvent. Examine the nozzle body and remove any carbon deposits from exterior surfaces using a brass wire brush. The nozzle body must be in good condition and not blued due to overheating.

Fig. 67 — Clean out small feed channel bores with drill or wire as shown. These bores are rarely choked and insertion of drill or wire by hand will be sufficient.

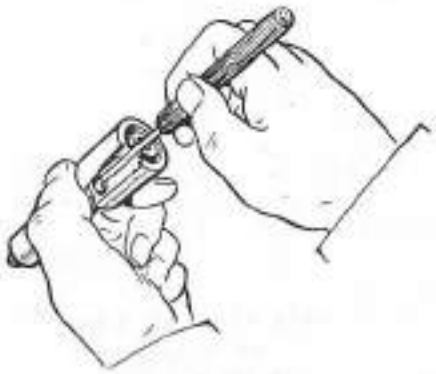

Fig. 68 — Insert special groove scraper until hooked nose of scraper enters fuel gallery. Press scraper hard against side of gallery and rotate nozzle to clear any carbon deposit from this area.

All polished surfaces should be relatively bright without scratches or dull patches. Mating faces (F—Fig. 72) must be absolutely clean and free from nicks, scratches or foreign material as these surfaces must register together to form a high pressure joint.

Clean out the small fuel feed channels, using a small diameter wire as shown in Fig. 67. Insert the special groove scraper (see Fig. 68) into nozzle body until nose of scraper locates in the fuel gallery. Press nose of scraper hard against side of cavity and rotate scraper to clean all carbon deposits from the gallery. Using seat scraper, clean all carbon from valve seat by rotating and pressing on scraper as shown in Fig. 69. Then, clean dome cavity in nozzle tip with dome cavity scraper as in Fig. 70.

Using a pin vise with proper size cleaning wire, thoroughly clean carbon from the four spray holes in nozzle tip as shown in Fig. 71. Use a 0.20 mm. (0.008 inch) diameter cleaning wire for model 770, a 0.25 mm. (0.010 inch) diameter wire for model 880 with 3/40 engine, or a 0.27 mm

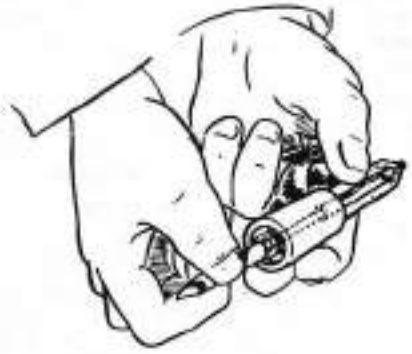

Fig. 69 — Use seat scraper to clean all carbon from needle seat in tip of nozzle by rotating scraper and pressing it against seat as it is rotated.

Fig. 70 — Remove any carbon from dome (tip) cavity with dome cavity cleaner as shown above.

(0.011 inch) diameter wire for all other models. Note: Cleaning wires (probes) available through David Brown parts are listed by size of spray hole, not by actual wire size.

Examine the stem and seat end of the nozzle valve and remove any carbon deposit using a clean, lint free cloth. Use extreme care, however, as any burr or small scratch may cause valve leakage or spray pattern distortion. If valve seat has a dull circumferential ring indicating wear or pitting, or if valve is blued, the valve and body should be turned over to an authorized diesel service station for possible overhaul.

Before reassembling, thoroughly rinse all parts in clean diesel fuel and make certain that all carbon is removed from the nozzle holder nut. Install nozzle assembly and cap nut making certain that the valve stem is located in the hole of the holder body and the two dowel pins (P—Fig. 72) enter holes in nozzle body. Tighten the holder nut to a torque of 40-60 Ft.-Lbs.

Install the spindle (F—Fig. 65) spring (E), adjusting screw (D) and lock nut (C) using new copper washer (B). Connect the injector to a nozzle tester and adjust opening pressure to

Fig. 71 — Using pin vise and proper size of cleaning wire to probe all carbon from the four injection spray holes in each nozzle tip.

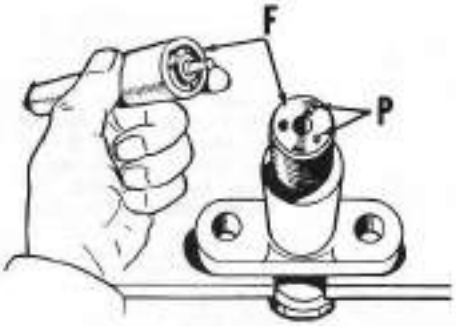


Fig. 72 — When reassembling nozzle and needle assembly in holder, be sure pressure faces (F) of nozzle and holder are clean, and that dowel pins (P) on holder enter proper holes in nozzle.

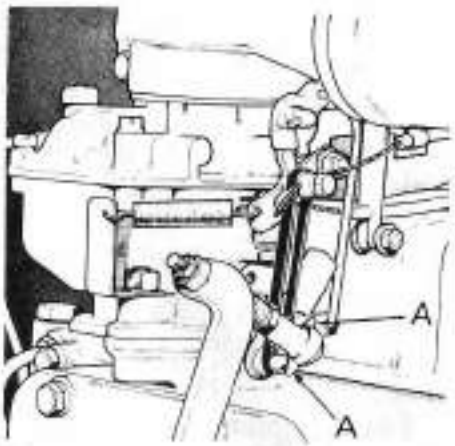


Fig. 74 — Governor link can be disconnected from carburetor throttle arm after bending tabs (A) back as shown. Throttle arm is then held in position by rubber band placed as shown.

2575 psi. Use new copper gasket and install cap nut (A). Recheck nozzle opening pressure to be sure adjustment was not changed by tightening the lock nut and cap nut.

Retest the injector as outlined in paragraphs 107, 108 and 109. If injector fails to pass these tests, renew the nozzle and needle assembly (J and K).

# NON-DIESEL GOVERNOR

## NON-DIESEL GOVERNOR

### Models 3800 and 4600

111. **ADJUSTMENT.** Low idle speed should be 500 RPM, high idle speed should be 2350 RPM and speed under rated load should be 2200 RPM. If necessary to adjust governor, proceed as follows:

Start and run engine until at normal operating temperature. Move the slow idle speed (forward) stop on throttle lever quadrant to end of slot so that throttle lever can be moved fully forward. Temporarily install an idle speed adjusting screw (#2 British Association thread) into the carburetor throttle lever and turn screw in until engine is running at 1400 RPM; refer to Fig. 73. Disconnect governor link from carburetor throttle arm and hold throttle arm at 1400 RPM position with rubber band as shown in Fig. 74. Take care not to overspeed engine while disconnecting the governor link.

With engine running at 1400 RPM, loosen lock nut on governor adjusting screw (C—Fig. 73) and back screw out until button head on lower end of screw clears governor weight plunger (18—Fig. 75) which extends up through governor housing (15). Then, turn screw back in until it just contacts the plunger plus one to 1½ additional turns and tighten lock nut.

With screw (C—Fig. 73) adjusted, adjust carburetor idle fuel mixture needle as follows: Back out the temporarily installed screw in carburetor throttle arm until engine is running

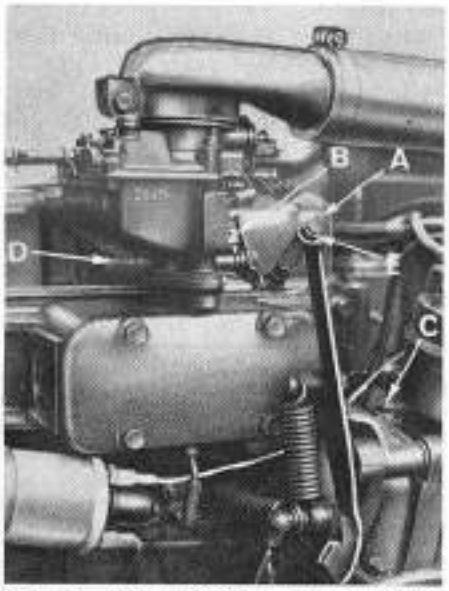


Fig. 73 — View showing governor adjustment points for models 3800 and 4600.

A. Link rod
B. Hole for temporary speed screw
C. Adjusting screw
D. Idle fuel needle
E. Adjusting nut

at 500 RPM. Adjust idle fuel needle (D) so that engine idles at fastest RPM obtainable, then readjust screw in throttle arm to obtain a 500 RPM idle speed if necessary. Turn idle fuel needle in (clockwise) until engine speed just begins to drop, then back needle out (counter-clockwise) ½-turn.

After adjusting carburetor idle fuel mixture needle, reconnect governor link to carburetor throttle arm, remove the set screw from arm and cut rubber band. If engine speed does not remain at 500 RPM, adjust length of governor link rod (A—Fig. 73) by loosening lock nut and turning adjusting nut (E). Retighten lock nut when 500 RPM idle speed is obtained.

With governor linkage adjusted, adjust position of slow idle stop on throttle lever quadrant so that when lever is moved forward, it just contacts stop as engine speed slows to 500 RPM. Move throttle lever rearward against high idle speed stop and check engine speed; readjust position of stop as necessary to obtain maximum high idle no load speed of 2350 RPM.

112. **R&R AND OVERHAUL.** Turn engine to static timing position (refer to paragraph 118) and remove ignition distributor. Note position of drive slot in shaft (45—Fig. 76) for reassembly. Disconnect all governor linkage, remove nuts from the two long studs extending through governor housing into cylinder block, then lift complete governor assembly from cylinder block and studs.

Unbolt and separate upper governor housing (15—Fig. 76) from lower housing (36) and withdraw thrust bearing and push rod assembly (18—Fig. 75) from upper housing. Thread two stud bolts into puller holes in governor drive gear (40—Fig. 76) and using suitable adapters, pull gear from shaft (45). Remove lower housing (36) from drive housing (38). Remove snap ring (42) and press shaft (45) downward out of housing and bearing (43), then remove snap ring (41) and press bearing upward out of housing. Remove bushing (44) from lower end of housing.

Unbolt bearing support plate (20—Fig. 75) from lower housing (36—Fig. 76) and remove the governor weight

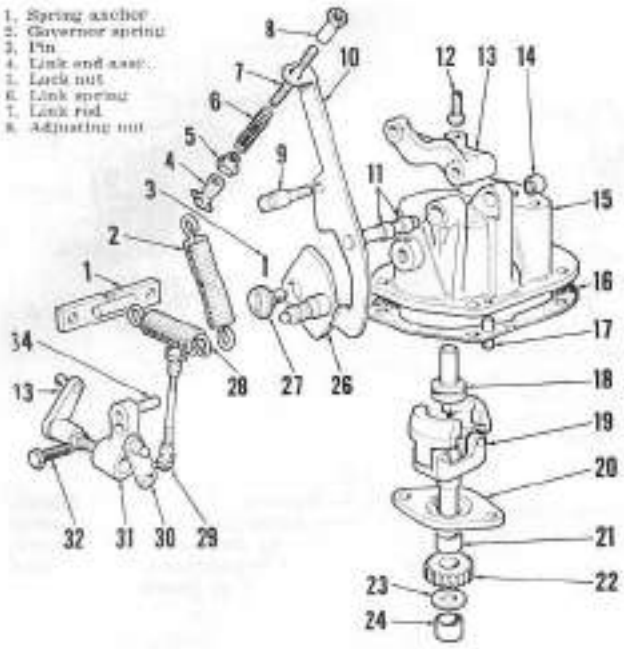


**Fig. 75 — Exploded view of governor assembly. Adjusting screw (12) (see also C-Fig. 73) contacts weight plunger (18) which extends up through the housing (15). Governor gear (22) is driven from gear (40-Fig. 76) on distributor drive shaft.**

9. Anchor bolt
10. Governor arm
11. Needle bearings
12. Adjusting screw
13. Arm
14. Needle bearing
15. Housing
16. Gasket
17. Dowel pin
18. Plunger
19. Weight assembly
20. Bearing support
21. Bushing
22. Governor driven gear
23. Thrust washer
24. Bushing
26. Cam
27. Pivot screw
28. Balance spring
29. Throttle link
30. Throttle arm
31. Support bracket
32. Cap screw
33. Throttle bellcrank
34. Dowel pin

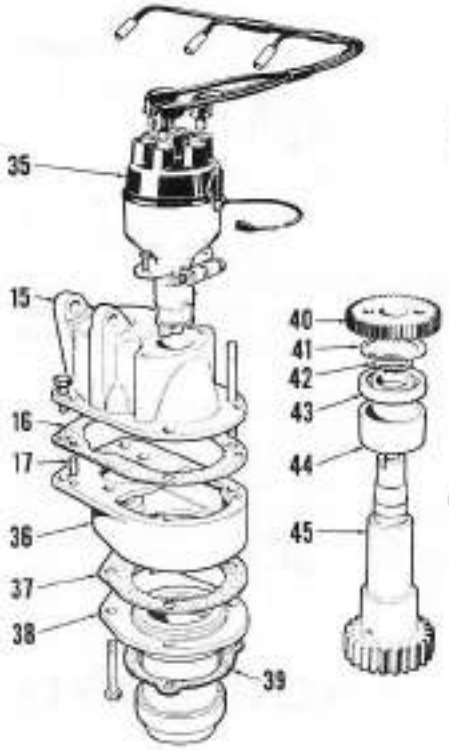

**Fig. 76 — Exploded view of distributor drive unit. Bearing support (20—Fig. 75) mounts on lower housing (36).**

15. Housing
16. Gasket
17. Dowel pin
35. Distributor assembly
36. Lower housing
37. Gasket
38. Drive gear housing
39. Gasket
40. Governor drive gear
41. Snap ring
42. Snap ring
43. Housing
44. Bushing
45. Distributor drive gear

shaft, support and gear assembly; take care not to lose the thrust washer (23—Fig. 75). Using suitable pullers, remove gear (22) from shaft, withdraw shaft and weight assembly from support plate and remove bushing (21) from plate. Remove lower bushing (24) from lower housing.

Remove spring anchor bolt (9) from levers (10 and 13), then withdraw lever and shaft (10) and remove lever (13) from housing (15). Remove needle bearings (11 and 14) from housing. Loosen lock nut and remove set screw (not shown) then unscrew pivot shaft (27). Remove pin (3) and cam (26).

Reassemble governor using new bearings and other parts as required. Press gears onto shafts until they firmly contact shoulders. Reinstall assembly with ignition distributor drive slot in same position as removed with engine at static timing position. Retime ignition distributor as outlined in paragraph 118 and adjust governor linkage as in paragraph 111.

# COOLING SYSTEM

## RADIATOR

### All Models

113. To remove radiator, drain cooling system and remove hood. Disconnect air cleaner hoses from through pipe at front and rear of radiator upper tank. On models with closed crankcase ventilation system, remove the pipe connecting air cleaner to breather on rocker arm cover. Disconnect radiator hoses, then unbolt and remove radiator from tractor.

## THERMOSTAT

### All Models

114. Thermostat is located in front end of cylinder head and is accessible after draining radiator and removing water outlet housing from cylinder head.

Standard thermostat should start to open at 174 to 183 degrees F., and be fully open at 200 degrees F. If placed

**Fig. 77 — Exploded view of model 990 water pump and fan used on 4/47 engine. Water pump used on model 4/49 engine is shown in Fig. 79.**

1. Bearing retaining screw
2. Fan pulley
3. Shaft & bearing assy.
4. Pump body
6. Gasket
10. Seal assembly
11. Impeller
12. By-pass connector
13. By-pass hose
14. Hose clamps

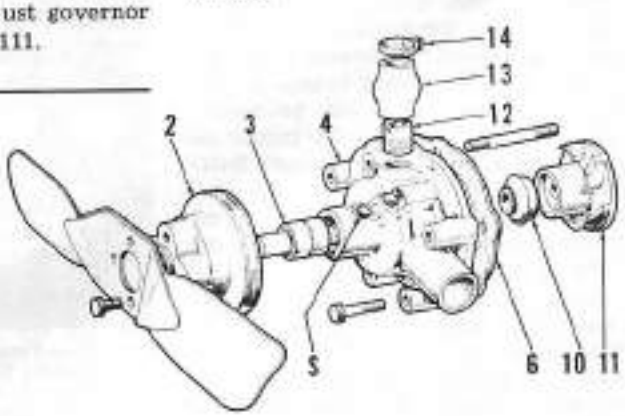

**Fig. 78 — Exploded view of water pump and 7-blade nylon fan used on models 3800 and 4600. Water pump for 3-cylinder diesel models is similar except for being fitted with by-pass hose (see items 12, 13 and 14 — Fig. 77) and two bladed fan.**

1. Bearing retaining screw
1. Cap screws
2. Metal plate
3. Nylon fan
4. Fan pulley
5. Shaft & bearing assy.

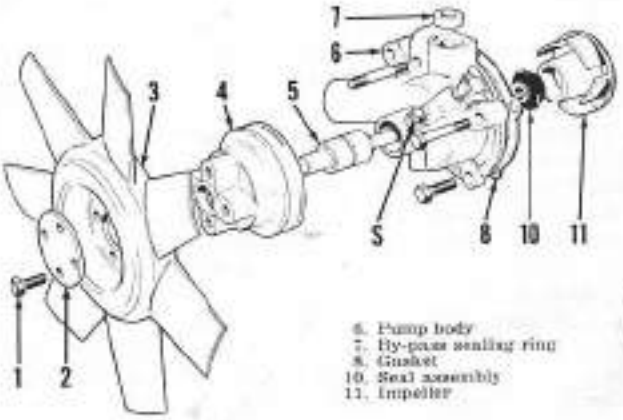

6. Pump body
7. By-pass sealing ring
8. Gasket
10. Seal assembly
11. Impeller

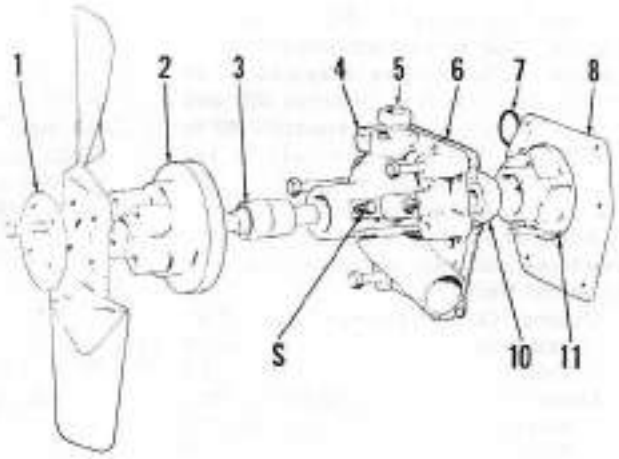


Fig. 79 — Exploded view of water pump assembly used on model 1200 and on model 990 with 4/49 engine. Note: A 7-blade moulded nylon fan is used on 990 and late 1200 water pumps: refer to (3-Fig.78).

S. Bearing retaining screw
1. Retaining plate
2. Fan pulley
3. Shaft & bearing assy.
4. Pump body
5. By-pass sealing ring
6. Gasket
7. "O" ring
8. Support plate
10. Seal assembly
11. Impeller

in boiling water, the thermostat should be fully open in 60 to 90 seconds.

### WATER PUMP

#### All Models

115. To remove water pump, drain cooling system and remove hood. Remove lower radiator hose and on models with by-pass hose, loosen the by-pass hose clamps and free hose from water pump connection. On models 3800 and 4600, remove the pipe connecting water pump to intake manifold. Remove the fan blades, then unbolt and remove water pump assembly.

116. Refer to Figs. 77, 78 and 79. On model 1200, remove the support plate (8—Fig. 79), then, on all models, proceed as follows to disassemble pump:

Remove the bearing retaining screw (S—Fig. 77, 78 or 79). Adequately support water pump body in press with impeller up. Press the shaft, bearing and pulley assembly out of pump body and impeller. Remove old seal and using water base lubricant, lubricate new seal and press into place. If shaft and bearing assembly is to be renewed, press shaft and bearing from pump pulley.

To reassemble, position bearing locating hole in line with screw (S) hole in pump body, push bearing into body and install retaining screw. Lock the screw with tab washer. Support impeller end of shaft and press pulley on shaft until shaft is flush with bore in pulley. Carefully support assembly on pulley end of shaft with piece of ⅜-inch diameter bar stock, then press impeller onto shaft until impeller blades to pump body clearance is 0.005. Reinstall model 1200 pump support plate. Check to see that pump shaft will turn without binding before reinstalling pump on tractor.

# ELECTRICAL SYSTEM

### SPARK PLUGS

#### Models 3800 and 4600

117. Use AC type 44XLS or equivalent spark plugs. Set electrode gap to 0.025.

### IGNITION DISTRIBUTOR AND TIMING

#### Models 3800 and 4600

118. An AC-Delco model 7953595 ignition distributor with a centrifugal advance mechanism is used. Total distributor advance should be 10 degrees at 1000 distributor RPM. Adjust breaker point gap to 0.020.

Distributor to engine timing can be set by static method only as no provision is made for use of strobe type timing light. Turn engine so that No. 1 piston is coming up on compression stroke, then continue to turn engine slowly until pin inserted through "SPILL" timing hole in clutch housing will fall into timing hole in flywheel. At this time, distributor rotor should be towards No. 1 spark plug terminal and breaker points just starting to open. To accurately determine when points start to open, disconnect ignition coil lead from distributor and connect a light to terminal. The light should be on when the points are closed. Loosen distributor clamp bolt and turn distributor body counter-clockwise so that light is on, then slowly turn distributor clockwise until light goes out and tighten clamp bolt while holding distributor in this position. Remove timing pin from hole in clutch cover.

Refer to the following AC-Delco parts information:

| Item | AC-Delco Part No. |
|---|---|
| Distributor Assy. | 7953595 |
| Distributor Cap | 827435 |
| Distributor Rotor | 820445 |
| Breaker Plate Assy. | 7953598 |
| Breaker Points | 7953383 |
| Condenser | 1928111 |

### GENERATOR AND VOLTAGE REGULATOR

#### All Models

119. A Lucas model C40A generator and model RB108 voltage regulator are used. To check generator, disconnect leads from generator and connect generator terminals together. Connect a voltmeter between the joined terminals and ground. Start engine and run at slow idle (700 RPM) and observe voltmeter reading; a reading of between 10 and 13 volts indicates generator is in satisfactory condition. Refer to the following generator service specifications:

Brush spring tension ..22-25 ounces
Field coil draw at 12 volts ..2 amperes
Field coil resistance .....6.1 ohms

Regulator test specifications are as follows: Cut-Out Relay:

Closing voltage .....12.7-13.3
Opening voltage .....8.5-11.0

Regulator Unit:

| Temp., °F. | Volts |
|---|---|
| 50 | 16.1-16.7 |
| 68 | 16.0-16.6 |
| 86 | 15.9-16.5 |
| 104 | 15.8-16.4 |

### STARTER

#### All Diesel Models

120. Diesel models are equipped with a Lucas model M45G starter with integral solenoid to engage starter gear with flywheel ring gear. When servicing starter, refer to Fig. 80 for adjustment of gear engaging yoke pivot pin.

If necessary to service the drive clutch and gear unit, refer to exploded view of the assembly in Fig.

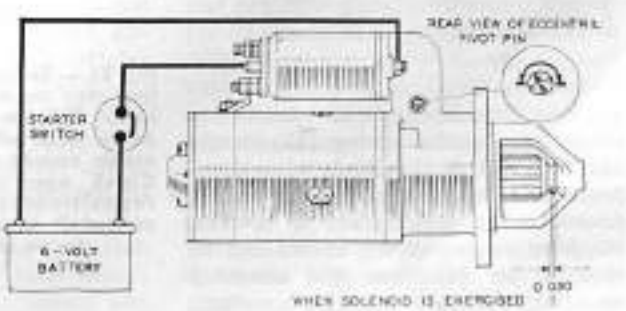


Fig. 80 — To adjust diesel starter drive gear yoke, energize solenoid with 6-volt current connected as shown, then adjust yoke pivot pin to provide 0.020 to 0.030 clearance between end of drive unit and thrust washer.

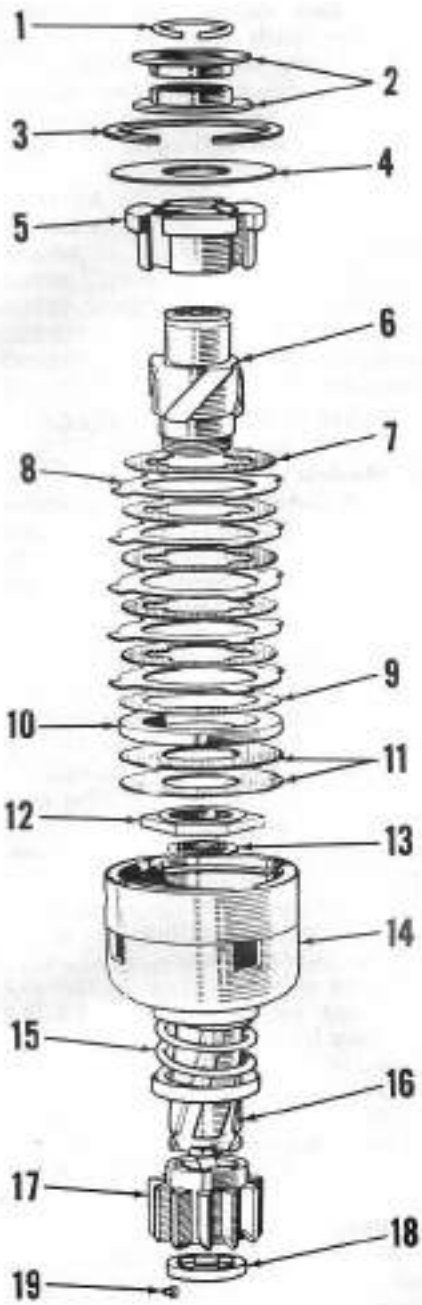


**Fig. 81—Exploded view of Lucas starting motor drive clutch and gear. Clutch will transmit torque in driving direction only.**

1. Snap ring
2. Yoke collar
3. Snap ring
4. Retaining washer
5. Clutch hub
6. Drive sleeve
7. Inner clutch plates
8. Outer clutch plates
9. Shim(s)
10. Backing ring
11. Pressure plates
12. Ring nut
13. Thrust washer
14. Barrel unit
15. Cushion spring
16. Helical splined sleeve
17. Drive gear
18. Retaining ring
19. Rivet

81 for disassembly and reassembly sequence. Cushion spring (15) should exert a force of 11 pounds when compressed to a length of ⅞-inch and 16 pounds when compressed to ½-inch. Slipping torque of the clutch can be checked by installing the assembly on armature shaft, clamping armature between soft metal inserts in vise and turning gear in counter-clockwise direction with torque wrench. The clutch should slip at between 800 and 950 inch-pounds (approximately 65 to 80 Ft.-Lbs.). If necessary, add or remove shims (9) to increase or decrease clutch slipping torque.

Refer to the following solenoid and starting motor test specifications:

Solenoid Unit:
- Current Consumption, Closing Coil:
  - Amperes ..... 24-28
  - Volts ..... 4.0
- Current Consumption, Hold In Coil:
  - Amperes ..... 5.1-5.8
  - Volts ..... 4.0
- Resistance, Ohms:
  - Closing Coil ..... 0.144-0.146
  - Hold In Coil ..... 0.688-0.792

Starting Motor:
- Brush spring tension .. 30-40 ounces
- No-load test:
  - Volts ..... 12
  - Amperes ..... 90
  - RPM ..... 8000-9000
- Lock test:
  - Volts ..... 6.4
  - Amperes ..... 900
  - Torque, Ft.-Lbs. ..... 32.5

### Models 3800-4600

121. Refer to the following test specifications for Lucas starter used on gasoline engine models:

Brush spring tension .... 30-40 ounces
- No-Load Test:
  - Volts ..... 12.0
  - Amperes ..... 45
- RPM ..... 5800-6800
- Lock Test:
  - Volts ..... 9.8-10.2
  - Amperes ..... 200-220
  - Torque, Ft.-Lbs. ..... 22

# SINGLE DISC CLUTCH

## ADJUSTMENT

### Model 770

122. Clutch pedal free play (A—Fig. 82) should be ½ to ¾-inch. To adjust, loosen lock nut (C) and turn pedal stop (D) inward to increase amount of free play, or out to decrease. When pedal free play is taken up, the pedal pad should be a distance (B) of 2¼ to 3¾ inches above foot rest. If sufficient free play cannot be obtained by adjustment of stop (D) or pedal is not within range of 2¼ to 3¾ inches from foot rest when free movement is taken up, pedal must be repositioned on cross shaft. Scribe a mark across pedal and end of shaft, then remove bolt (E) and pull pedal from splined shaft. Move the pedal one serration clockwise to gain free play movement and reduce pedal height, or counter-clockwise to reduce free play movement and increase pedal height.

### Models 880 and 990

123. Clutch pedal free play (A—Fig. 83) should be from one to 1½ inches. To adjust, loosen lock nut (B) and turn adjusting screw (C) as necessary to bring free play within proper limits.

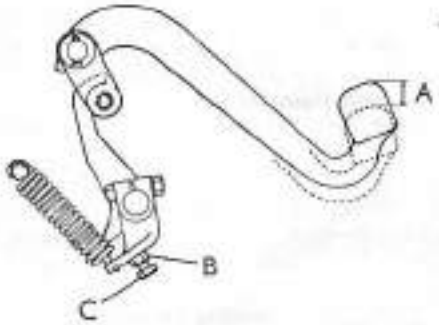


**Fig. 83 — On models 880 and 990, adjust clutch pedal free play by loosening lock-nut (B) and turning screw (C).**

## R&R CLUTCH

### Model 770

124. To remove clutch, first remove transmission cover as outlined in paragraph 146, then proceed as follows:

Disengage snap ring (21—Fig. 86) at front side of muff coupling (22) and slide coupling forward until free of transmission input shaft. Leave spacer shims (24) on transmission

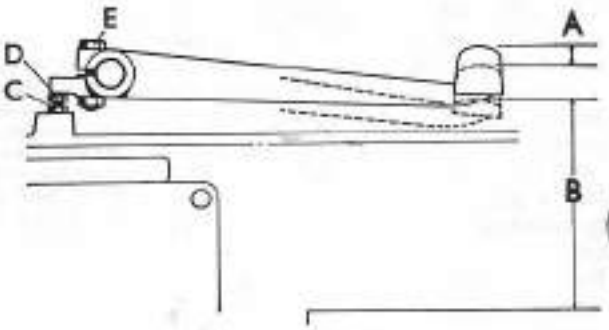


**Fig. 82 — To adjust pedal free play on model 770, loosen lock nut (C) and adjust stop bolt (D) to obtain desired free play. Clutch wear may make repositioning lever on cross-shaft necessary; refer to text.**

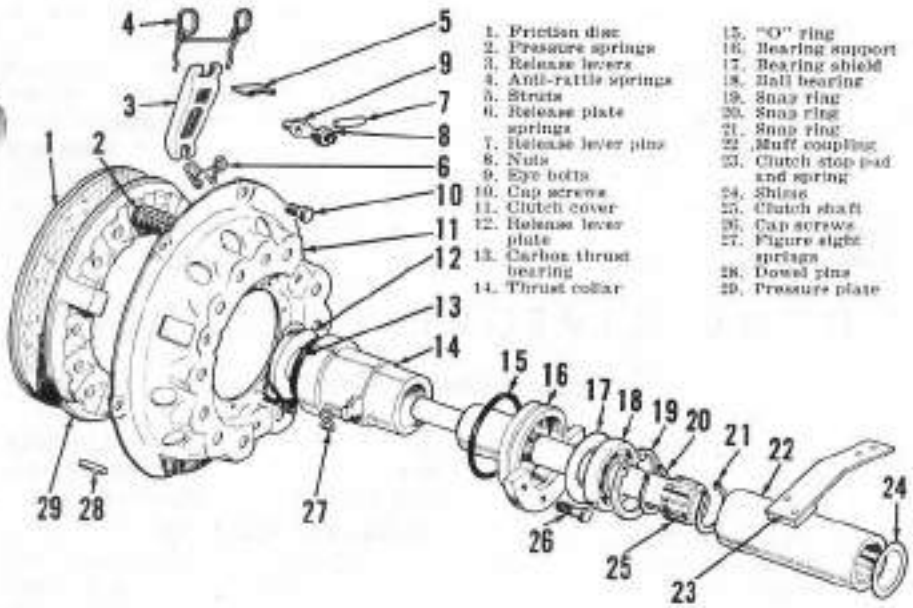


**Fig. 86 — Exploded view of typical single clutch unit used on all models so equipped.**

shaft. Unbolt support (16), then move the support and clutch shaft rearward until shaft is free of flywheel. Unbolt clutch cover from flywheel, placing three nuts between cover and release levers as the cover cap screws are loosened. Remove clutch and shaft assembly, clutch unit first, from tractor main frame.

To reinstall clutch, place long hub of clutch disc towards flywheel. Lower the clutch unit and shaft into tractor main frame, rear end of shaft first. Engage clutch shaft in flywheel pilot bearing, then bolt clutch cover to flywheel, removing the nuts or spacers from between cover and release levers as cover cap screws are tightened. Before installing transmission cover, check muff coupling end play; if end play is not within limits of 0.010 to 0.040, add or remove shims (24) as necessary to obtain correct end play. Reassemble tractor by reversing disassembly procedure, then adjust clutch as outlined in paragraph 122.

### Models 880 and 990

125. The quickest method for removing clutch assembly is to split tractor between transmission and flywheel housing (model 880) or between transmission and engine (model 990); refer to paragraph 126. An alternate method, which will also give access to clutch shaft, is to remove the clutch and shaft from above as outlined in paragraph 127.

126. Remove hood and disconnect throttle and engine stop control linkages. On model 990 only, remove throttle lever and engine starting motor. On both models, disconnect fuel lines and wiring, then remove fuel tank and instrument panel as a unit. Disconnect drag link from steering gear arm.

Drive wood wedges between each side of front support (main frame extension) and axle beam so that engine unit will not tilt on front axle pivot pin. Using suitable wood block placed on rolling floor jack, support rear end of engine under flywheel housing (model 880) or under rear end of engine frame on model 990. Adequately support front end of transmission, then unbolt transmission and cover from flywheel housing on model 880 or engine on model 990 and roll front unit forward.

Place nuts or other suitable spacers between clutch cover and release levers, then unbolt and remove clutch cover and pressure plate assembly from flywheel and remove clutch lined disc.

When reassembling, use suitable pilot to align clutch lined disc with pilot bearing in flywheel, then reinstall clutch cover and pressure plate assembly and remove the three spacers from between cover and release levers. Reconnect front and rear sections of tractor and reassemble by reversing disassembly procedure.

127. To remove clutch and shaft from above without splitting tractor, proceed as follows: Remove hood, disconnect fuel lines from tank, wiring from instrument panel and disconnect throttle and engine stop control linkages. On model 990 only, remove throttle lever. On both models, unbolt and remove the fuel tank and instrument panel as a unit.

On model 880, disconnect drag link from steering gear arm, then unbolt and remove transmission cover and steering gear as a unit. Back out clutch free play adjusting screw, disconnect pedal return spring and unbolt and remove clutch cover.

On model 990, disconnect starter cable and remove engine starter. Disconnect drag link from steering gear, then unbolt and remove steering gear assembly. Remove the bolt from steering gear cavity that extends into clutch cover, then unbolt and remove transmission cover. Back out pedal free play adjusting screw, disconnect clutch pedal return spring, then unbolt and remove clutch cover.

With the clutch cover removed, disengage snap ring from front side of muff (internal splined) coupling, then slide coupling forward until clear of transmission input shaft. Leave the coupling spacer shims on transmission shaft. Remove the two figure-eight springs securing clutch fork to release bearing carrier and unbolt support housing (16—Fig. 86) from transmission housing. Slide the clutch shaft and support housing to rear so that shaft is clear of pilot bearing. Place nuts or other suitable spacers between clutch cover and the release levers, then unbolt clutch cover from flywheel. Lift up rear end of clutch shaft until clear of transmission, then remove shaft and clutch as a unit.

Reinstall by reversing removal procedure. Use clutch shaft for disc aligning tool. Be sure to remove spacers from between clutch cover and release levers. Before reinstalling transmission and clutch covers, check end play of the muff coupling which should be 0.010 to 0.040. Add or remove shims (24—Fig. 86) as necessary to bring end play within limits. Readjust clutch as outlined in paragraph 123.

## CLUTCH OVERHAUL

### Models 770, 880 and 990

128. With clutch pressure plate and cover assembly removed, remove flywheel, place flywheel on workbench with clutch friction surface up and place lined disc or three evenly spaced 0.310 thick spacers on flywheel. Scribe assembly marks on the clutch cover and pressure plate, then place assembly on lined disc or spacers with dowel holes in clutch cover flange aligned with dowel pins in flywheel. Install and evenly tighten the cover retaining cap screws until clutch cover flange contacts flywheel. Remove the three nuts or other spacers installed between cover and release levers while clutch was being removed from flywheel. Remove three cap screws (models 770 and 880) or four cap

screws (model 990) from evenly spaced positions and install ⅝-inch longer cap screws in these positions. Bottom the long screws in flywheel.

Remove the thrust plate from release levers and carefully unstake the release lever adjusting nuts. Then, alternately and evenly loosen the four short cap screws until cover flange contacts heads of the long cap screws. Alternately and evenly loosen the long cap screws until clutch spring pressure is released, then disassemble the clutch unit.

Thoroughly clean all parts. Renew pressure plate if excessively worn, cracked, scored or warped. Renew any springs that are rusted, distorted or that fail to meet the following specifications:

**Clutch Spring Specifications**

Model 770:
- Part Number ..... 961778
- Color Code ..... Black
- Lbs. Pressure @ 1.69 inches ... 155

Model 880:
- Part Number ..... 900239
- Color Code ..... Light Green
- Lbs. Pressure @ 1.69 inches ... 110

Model 990:
- Part Number ..... 961049
- Color Code .... Yellow/Light Green
- Lbs. Pressure @ 1.69 inches ... 140

129. To reassemble and adjust the unit, proceed as follows: Evenly place three 0.310 thick spacers on the clutch friction surface of flywheel. Place the pressure plate on spacers and install the release levers, eyebolts and struts and the clutch springs on pressure plate. Place cover down over pressure plate, springs and levers so that springs enter proper cups in cover, the anti-rattle springs contact release levers and so that the previously affixed assembly (scribe) marks on pressure plate and cover are aligned. Turn the assembly on flywheel so that dowel holes in cover flange are aligned with dowel pins in flywheel. Install the long cap screws used in disassembly in alternate bolt holes, be sure eyebolts pass through proper holes in cover and tighten the long cap screws evenly until they bottom in flywheel. Install cover retaining cap screws in remaining holes and tighten evenly until cover flange contacts flywheel. Remove the long cap screws and install remaining cover retaining cap screws, then tighten all cover retaining cap screws to a torque of 23-30 Ft.-Lbs. Install new release lever adjusting nuts and turn them down until flush with ends of eyebolts.

Move the flywheel and clutch assembly to a press and actuate release levers five or six times to seat the linkage. Then, accurately measure distance from machined surface of flywheel to contact surface on release levers and adjust release lever height to 1.895 inches from flywheel on model 770, or to 1.955 inches on model 880 or 990.

With release lever height adjusted, carefully stake the adjusting nuts on eyebolts, then recheck adjustment to be sure staking the nuts did not change lever height. Remove clutch assembly from flywheel, placing spacers or nuts between clutch cover and release levers as the retaining cap screws are removed. Reinstall release lever plate on levers. Reinstall flywheel and clutch assembly.

# DUAL "LIVEDRIVE" CLUTCH

## (Except Model 1200)

### ADJUSTMENT

#### Model 770

130. Clutch pedal free play (A—Fig. 87) should be ½ to ¾-inch. To adjust, loosen lock nut (C) and turn stop bolt (D) inward to increase or out to decrease free play. When free play is taken up, pedal pad should be a distance (B) of 3¾ to 5¼ inches above foot rest.

If sufficient free play cannot be obtained by adjustment of stop bolt, or pedal is not within 3¾ to 5¼ inches above foot rest when free play is taken up, pedal must be repositioned on clutch cross shaft. Scribe a mark across end of shaft and pedal, then remove bolt (E) and pull pedal from shaft. Move pedal one serration at a time and in a clockwise direction to gain free play and reduce pedal height, or counter-clockwise to reduce free play and increase pedal height. Reinstall and tighten bolt (E) when pedal is properly positioned.

Check to see that when clutch pedal is fully depressed that PTO shaft will stop turning. If the PTO clutch disc will not release and continues to turn shaft, it will be necessary to readjust PTO clutch cover adjusting screws. Remove the cover from bottom of clutch housing and refer to Fig. 90. Turn the engine so that an adjusting screw (35) and lock nut are accessible through opening, loosen lock nut and adjust screw so that clearance (C) between end of screw and clutch pressure plate (6) is 0.070. Repeat this operation by turning engine and adjusting remaining two adjusting screws. Be sure to firmly tighten lock nuts after making adjustment.

#### Models 780 and 3800

131. Clutch pedal free play (A—Fig. 88) should be ¾ to 1 inch. When free play is taken up, pedal pad should be a distance (B) of 7½ to 10⅝ inches from foot rest. With pedal up (fully released), there should be 1/16-inch clearance (K) between clutch brake shaft lever and head of adjusting screw.

Adjust clutch free play by loosening lock nut (C) and turning adjusting screw (D) in to increase free play and reduce pedal height, or back screw out to decrease free play and increase pedal height. If proper amount of free play cannot be obtained by adjusting screw, or pedal height is not correct when free play is properly adjusted, lever (E) must be repositioned on clutch cross shaft. Scribe a mark across shaft and lever, remove bolt (F) and pull lever from shaft. Move lever one serration at a time and in a clockwise direction to increase free play and reduce pedal height, or in a counter-clockwise direction to reduce free play and increase pedal height. Reinstall and tighten bolt (F) when lever is properly positioned.

After free play and pedal height are satisfactory, check clearance (K) between brake shaft lever and adjusting screw. Loosen lock nut, turn adjusting screw as necessary to obtain 1/16-inch clearance when pedal is up

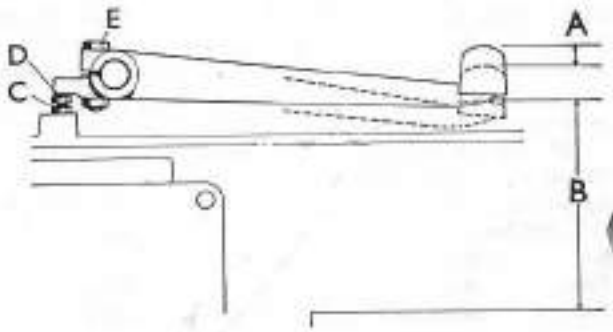


**Fig. 87—To adjust pedal free play on model 770, loosen lock nut (C) and adjust stop bolt (D) to obtain desired free play. Clutch wear may make repositioning lever on cross shaft necessary; refer to text.**

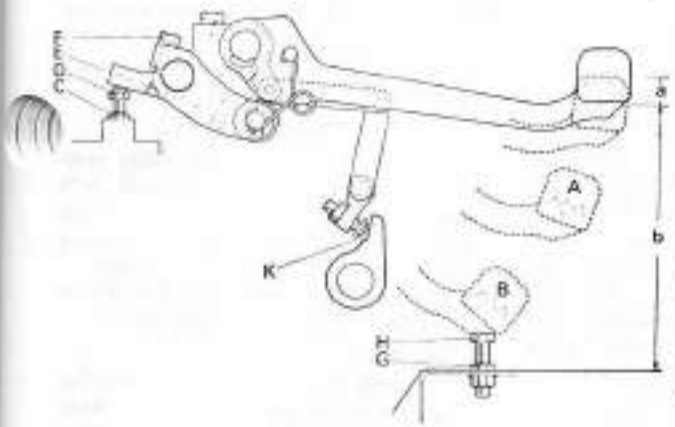


**Fig. 88 — View showing adjustment points for clutch and clutch stop linkage on models 780 and 3800. Refer to paragraph 131 for adjustment procedure.**

A. Transmission clutch released position
a. Free pedal
B. Both clutch plates released
b. Distance above foot rest with free pedal taken up
C. Lock nut
D. Free pedal adjusting screw
E. Cross shaft lever
F. Clamp bolt
G. Lock nut
H. Pedal stop bolt
K. Clutch stop adjusting screw

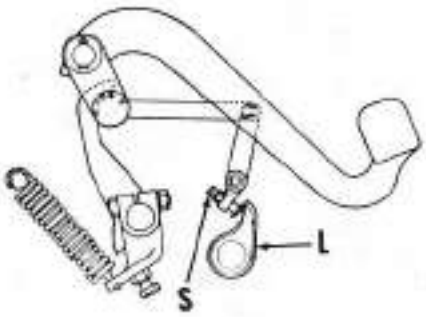


**Fig. 91 — View showing adjusting screw (S) for clutch stop lever (L) clearance; refer to paragraph 132.**

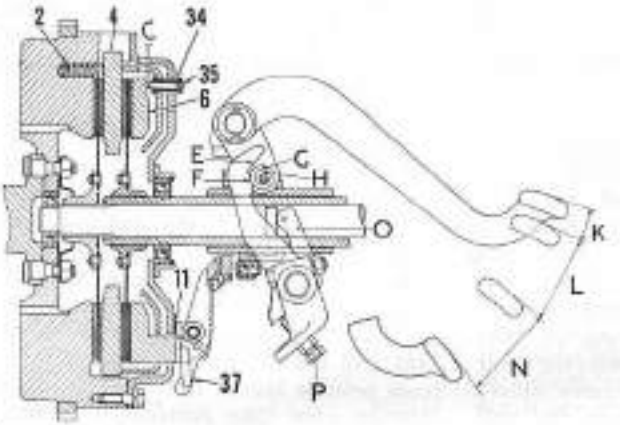


C. Adjusting screw clearance
E. Secondary lever roller contact face
F. Primary roller contact face
G. Release lever roller
H. Eccentric roller pin
K. Free pedal
L. Primary pedal travel
N. Secondary pedal travel
P. Free pedal adjusting screw
2. Thrust springs
4. PTO pressure (separator) plate
6. Transmission clutch pressure plate
11. Adjusting shims
34. Lock nuts
35. Inner cover adjusting screws
37. Release levers

**Fig. 90 — Cross-sectional view showing typical construction of all dual clutches. View also shows linkage adjusting points for models 880, 990 and 4600; refer to paragraph 132 for adjustment procedure. In operation, transmission clutch pressure plate (6) is released first, then it contacts inner cover adjusting screws (35) releasing the PTO clutch pressure plate (separator plate) (4).**

(fully released), then tighten lock nut.

Check to see that PTO clutch is disengaged when pedal is fully depressed. If clutch drags or does not disengage, remove the cover from bottom of clutch housing and turn engine so that one of the clutch cover adjusting screws (35—Fig. 90) and lock nuts (34) are accessible through opening. Loosen lock nut and adjust screw so that there is 0.070 clearance between screw and clutch pressure plate (6). Repeat this operation for remaining two adjusting screws, making sure that lock nuts are firmly tightened.

The clutch pedal stop bolt (H—Fig. 88) on foot rest is normally adjusted to 9/16-inch and should not require readjustment from this position.

### Models 880, 990 and 4600

132. Clutch pedal free play (K—Fig. 90) should be from 1 to 1½ inches. To adjust, loosen lock nut and turn adjusting bolt (P) in to decrease or out to increase amount of free play. With pedal up (fully released), there should be a clearance of 1/16-inch between clutch shaft brake lever (L—Fig. 91) and adjusting screw (S). Loosen lock nut and turn screw as required to obtain 1/16-inch clearance, then tighten lock nut. Note: Early model 880 and 990 tractors were not equipped with type of clutch shaft brake with external linkage as in Fig. 91.

With clutch free play properly adjusted, check to see that the PTO clutch is disengaged when pedal is fully repressed. If PTO clutch drags or will not release, proceed as follows: Remove inspection cover from clutch housing and turn engine so that a PTO clutch cover adjusting screw (35—Fig. 90) and lock nut (34) are accessible through opening. Loosen lock nut, adjust screw to obtain a clearance of 0.070 between end of screw and clutch pressure plate (6), then tighten lock nut. Turn engine and repeat adjustment at the two remaining screws (35).

With clutch free play and PTO clutch cover screws adjusted for proper clearance, depress clutch pedal so that pedal roller (G) contacts both faces (E and F) and while holding pedal in this position, remeasure clearance (C) between PTO clutch cover adjusting screws (35) and pressure plate (6). Clearance (C) should then measure 0.009 to 0.012; if not within these limits, the eccentric pin (H) must be adjusted to reposition roller (G). Remove retaining pin and rotate eccentric pin clockwise to increase measured clearance (C), or counter-clockwise to reduce clearance. Moving eccentric pin one adjusting hole will change measured clearance approximately 0.005. If eccentric pin is repositioned, it will be necessary to readjust clutch free play.

## R&R CLUTCH

### Models 770, 780 and 3800

133. To remove clutch, first remove transmission cover as outlined in paragraph 148, then proceed as follows:

Drive wood wedges between each side of front axle and main frame casting so that engine unit will not tilt on front axle pivot pin. Using rolling floor jack and wood block, support rear end of engine under flywheel housing. Adequately support front end of transmission, then unbolt transmission (rear main) frame from engine (front main) frame and roll front unit forward.

Unbolt clutch cover from flywheel, placing nuts or other suitable spacers between cover and release fingers as the retaining cap screws are loosened. Remove cover assembly, then withdraw the separator plate, thrust springs and PTO clutch disc from flywheel.

To reinstall clutch, proceed as follows: Place PTO disc in flywheel with long hub forward, insert thrust springs in flywheel bores and insert separator plate with same side forward as when removed. Using pilot tool (see Fig. 93), position the transmission clutch disc with hub forward (see Fig. 90), then install cover and pressure plate assembly. Remove spacers as cover cap screws are tightened, then remove pilot tool and reassemble tractor by reversing disassembly pro-

cedure. Adjust clutch as outlined in paragraph 130 or 131.

## Models 880, 990 and 4600

134. The quickest method for removing clutch is by splitting tractor as outlined in paragraph 135. On model 880 with 6-speed transmission after serial No. 533604, model 990 with 6-speed transmission after serial No. 487807 and on all model 4600 with 6-speed transmissions, the clutch can be removed from above as outlined in paragraph 136. Note: It is necessary to split tractor for clutch removal on all 12-speed transmissions and on models 880 and 990 with 6-speed transmissions prior to above serial numbers.

135. Remove hood and disconnect throttle and engine stop control linkages. On model 990 only, remove throttle lever and engine starting motor. On all models, disconnect fuel lines and wiring, then remove fuel tank and instrument panel as a unit. Disconnect drag link from steering gear arm.

Drive wood wedges between each side of front support (main frame extension) and axle beam so that engine unit will not tilt on front axle pivot pin. Using a suitable wood block placed on rolling floor jack, support rear end of engine under flywheel housing (models 880 and 4600) or under rear end of engine frame on model 990. Adequately support front end of transmission, then unbolt transmission and cover from flywheel housing on models 880 and 4600, or from engine on model 990, and roll front unit forward.

Place nuts or other suitable spacers between clutch cover and release levers as cover is unbolted from flywheel. Remove the cover and pressure plate assembly and the transmission clutch lined disc. Withdraw the separator plate from flywheel, then remove the PTO lined disc and the three separator plate thrust springs from flywheel.

To reinstall clutch assembly, proceed as follows: Place PTO clutch disc in flywheel with hub forward. Insert the separator plate thrust springs in bores in flywheel, then install separator plate. Note: If plate is being reused, be sure to reinstall with same side forward as when removed. Using a pilot tool made to dimensions shown in Fig. 93, position the transmission clutch disc with hub forward as shown in cross-sectional view in Fig. 99. With both the PTO and transmission clutch discs aligned with pilot inserted through discs into pilot bearing, install the clutch cover and pressure plate assembly. Remove the nuts or other spacers from between cover plate and release levers as the cover retaining screws are tightened. Remove clutch disc pilot and complete reassembly of tractor by reversing disassembly procedure. Adjust clutch as outlined in paragraph 132.

136. To remove clutch from above without splitting tractor, proceed as follows: Refer to paragraph 192 and remove power take-off housing from tractor, then withdraw cardan (PTO drive) shaft from rear of tractor.

Remove hood, disconnect fuel lines from tank, wiring from instrument panel and disconnect throttle and engine stop control linkage. On model 990, remove throttle lever. On all models, unbolt and remove fuel tank and instrument panel as a unit.

On models 880 and 4600, disconnect drag link from steering gear arm, then unbolt and remove transmission cover and steering gear as a unit. Back out clutch free play adjusting screw, disconnect pedal return spring and unbolt and remove clutch cover.

On model 990, disconnect starter cable and remove engine starter. Disconnect drag link from steering gear arm, then unbolt and remove steering gear assembly. Remove the bolt from steering gear cavity that extends into clutch cover, then unbolt and remove transmission cover. Back out pedal free play adjusting screw, disconnect pedal return spring, then unbolt and remove clutch cover.

With clutch cover removed, remove clutch stop brake band (except on early models 880 and 990) by disconnecting band at both ends. Disengage snap rings locating brake drum on clutch drive shaft and slide drum forward. Disengage snap ring at front side of muff (internal splined) coupling and slide coupling fully forward. Leave coupling spacer shims on transmission shaft. Unbolt clutch release bearing support from transmission. Unbolt clutch cover from flywheel, placing nuts or other suitable spacers between clutch cover and release levers as cover retaining cap screws are loosened. Lower rear end of clutch shaft and tilt clutch assembly up, then lift shaft and clutch cover as a unit from housing.

Reinstall shaft and clutch unit by reversing removal procedure, placing rear end of shaft down in housing first, then tilting clutch unit into position. Insert PTO cardan (drive) shaft through clutch unit and into pilot bearing of flywheel before tightening clutch cover retaining cap screws. Remove the spacers from between cover and release levers as the screws are tightened. After completing reassembly of unit, adjust clutch as outlined in paragraph 132.

## OVERHAUL

NOTE: Following procedure for clutch overhaul assumes shop is not equipped with special David Brown clutch fixture; if special fixture is available, disregard the following instructions and use tool for disassembly, reassembly and adjustment of clutch unit as outlined in instructions with tool kit.

## All Models

137. With clutch assembly removed, remove engine flywheel and place flywheel on bench with clutch friction surface up. Assemble clutch on flywheel with plates properly positioned as shown in cross-sectional view in Fig. 90, using long stud bolts and nuts instead of regular clutch cover retaining cap screws. Tighten the nuts equally until cover flange is tight against flywheel, removing the nuts or other spacers from between cover and release levers as the stud nuts are tightened.

Refer to exploded view of typical clutch assembly in Fig. 92 and proceed as follows: Remove retaining springs (42) and the release lever plate (15) from release levers (37). Remove the fulcrum pins (38), anti-rattle springs (41) and the release levers. Remove roller pins (40) from levers, catching the 19 loose needle rollers and roller (39) as each pin is removed.

Evenly loosen the stud nuts retaining cover to flywheel, taking care that the studs do not turn, until clutch springs are free, then remove the studs and nuts and disassemble clutch unit. Note that the transmission clutch springs are double, with the inside springs coiled in opposite direction from the outside spring coils. Note also that on models 770 and 3800, only three inner springs are used.

Carefully inspect all clutch parts for excessive wear, cracks, scoring or other damage and renew any part not suitable for further service. If either the pressure plate or the separator plate is slightly scored, the surface can be refaced providing no more than 0.015 material thickness is removed from surface; thus a total of 0.030 may be removed from separator plate. Separator plate thickness, new, is 0.760-0.765 on model 990 and 0.700-0.705 on other models. Check the clutch springs against the following values:

**Transmission Clutch Outer Spring—**
**All Models**

| | |
|---|---|
| Spring part No. | 902512 |
| Color Code | Brown |
| Lbs. Pressure @ 2.60 Inches | 125 |

cedure. Adjust clutch as outlined in paragraph 130 or 131.

### Models 880, 990 and 4600

134. The quickest method for removing clutch is by splitting tractor as outlined in paragraph 135. On model 880 with 6-speed transmission after serial No. 533604, model 990 with 6-speed transmission after serial No. 487807 and on all model 4600 with 6-speed transmissions, the clutch can be removed from above as outlined in paragraph 136. Note: It is necessary to split tractor for clutch removal on all 12-speed transmissions and on models 880 and 990 with 6-speed transmissions prior to above serial numbers.

135. Remove hood and disconnect throttle and engine stop control linkages. On model 990 only, remove throttle lever and engine starting motor. On all models, disconnect fuel lines and wiring, then remove fuel tank and instrument panel as a unit. Disconnect drag link from steering gear arm.

Drive wood wedges between each side of front support (main frame extension) and axle beam so that engine unit will not tilt on front axle pivot pin. Using a suitable wood block placed on rolling floor jack, support rear end of engine under flywheel housing (models 880 and 4600) or under rear end of engine frame on model 990. Adequately support front end of transmission, then unbolt transmission and cover from flywheel housing on models 880 and 4600, or from engine on model 990, and roll front unit forward.

Place nuts or other suitable spacers between clutch cover and release levers as cover is unbolted from flywheel. Remove the cover and pressure plate assembly and the transmission clutch lined disc. Withdraw the separator plate from flywheel, then remove the PTO lined disc and the three separator plate thrust springs from flywheel.

To reinstall clutch assembly, proceed as follows: Place PTO clutch disc in flywheel with hub forward. Insert the separator plate thrust springs in bores in flywheel, then install separator plate. Note: If plate is being reused, be sure to reinstall with same side forward as when removed. Using a pilot tool made to dimensions shown in Fig. 93, position the transmission clutch disc with hub forward as shown in cross-sectional view in Fig. 90. With both the PTO and transmission clutch discs aligned with pilot inserted through discs into pilot bearing, install the clutch cover and pressure plate assembly. Remove the nuts or other spacers from between cover plate and release levers as the cover retaining screws are tightened. Remove clutch disc pilot and complete reassembly of tractor by reversing disassembly procedure. Adjust clutch as outlined in paragraph 132.

136. To remove clutch from above without splitting tractor, proceed as follows: Refer to paragraph 192 and remove power take-off housing from tractor, then withdraw cardan (PTO drive) shaft from rear of tractor.

Remove hood, disconnect fuel lines from tank, wiring from instrument panel and disconnect throttle and engine stop control linkage. On model 990, remove throttle lever. On all models, unbolt and remove fuel tank and instrument panel as a unit.

On models 880 and 4600, disconnect drag link from steering gear arm, then unbolt and remove transmission cover and steering gear as a unit. Back out clutch free play adjusting screw, disconnect pedal return spring and unbolt and remove clutch cover.

On model 990, disconnect starter cable and remove engine starter. Disconnect drag link from steering gear arm, then unbolt and remove steering gear assembly. Remove the bolt from steering gear cavity that extends into clutch cover, then unbolt and remove transmission cover. Back out pedal free play adjusting screw, disconnect pedal return spring, then unbolt and remove clutch cover.

With clutch cover removed, remove clutch stop brake band (except on early models 880 and 990) by disconnecting band at both ends. Disengage snap rings locating brake drum on clutch drive shaft and slide drum forward. Disengage snap ring at front side of muff (internal splined) coupling and slide coupling fully forward. Leave coupling spacer shims on transmission shaft. Unbolt clutch release bearing support from transmission. Unbolt clutch cover from flywheel, placing nuts or other suitable spacers between clutch cover and release levers as cover retaining cap screws are loosened. Lower rear end of clutch shaft and tilt clutch assembly up, then lift shaft and clutch cover as a unit from housing.

Reinstall shaft and clutch unit by reversing removal procedure, placing rear end of shaft down in housing first, then tilting clutch unit into position. Insert PTO cardan (drive) shaft through clutch unit and into pilot bearing of flywheel before tightening clutch cover retaining cap screws. Remove the spacers from between cover and release levers as cap screws are tightened. After completing reassembly of unit, adjust clutch as outlined in paragraph 132.

## OVERHAUL

NOTE: Following procedure for clutch overhaul assumes shop is not equipped with special David Brown clutch fixture; if special fixture is available, disregard the following instructions and use tool for disassembly, reassembly and adjustment of clutch unit as outlined in instructions with tool kit.

### All Models

137. With clutch assembly removed, remove engine flywheel and place flywheel on bench with clutch friction surface up. Assemble clutch on flywheel with plates properly positioned as shown in cross-sectional view in Fig. 90, using long stud bolts and nuts instead of regular clutch cover retaining cap screws. Tighten the nuts equally until cover flange is tight against flywheel, removing the nuts or other spacers from between cover and release levers as the stud nuts are tightened.

Refer to exploded view of typical clutch assembly in Fig. 92 and proceed as follows: Remove retaining springs (42) and the release lever plate (15) from release levers (37). Remove the fulcrum pins (38), anti-rattle springs (41) and the release levers. Remove roller pins (40) from levers, catching the 19 loose needle rollers and roller (39) as each pin is removed.

Evenly loosen the stud nuts retaining cover to flywheel, taking care that the studs do not turn, until clutch springs are free, then remove the studs and nuts and disassemble clutch unit. Note that the transmission clutch springs are double, with the inside springs coiled in opposite direction from the outside spring coils. Note also that on models 770 and 3800, only three inner springs are used.

Carefully inspect all clutch parts for excessive wear, cracks, scoring or other damage and renew any part not suitable for further service. If either the pressure plate or the separator plate is slightly scored, the surface can be refaced providing no more than 0.015 material thickness is removed from surface; thus a total of 0.030 may be removed from separator plate. Separator plate thickness, new, is 0.760-0.765 on model 990 and 0.700-0.705 on other models. Check the clutch springs against the following values:

**Transmission Clutch Outer Spring—**
**All Models**

| | |
|---|---|
| Spring part No. | 902512 |
| Color Code | Brown |
| Lbs. Pressure @ 2.60 Inches | 125 |

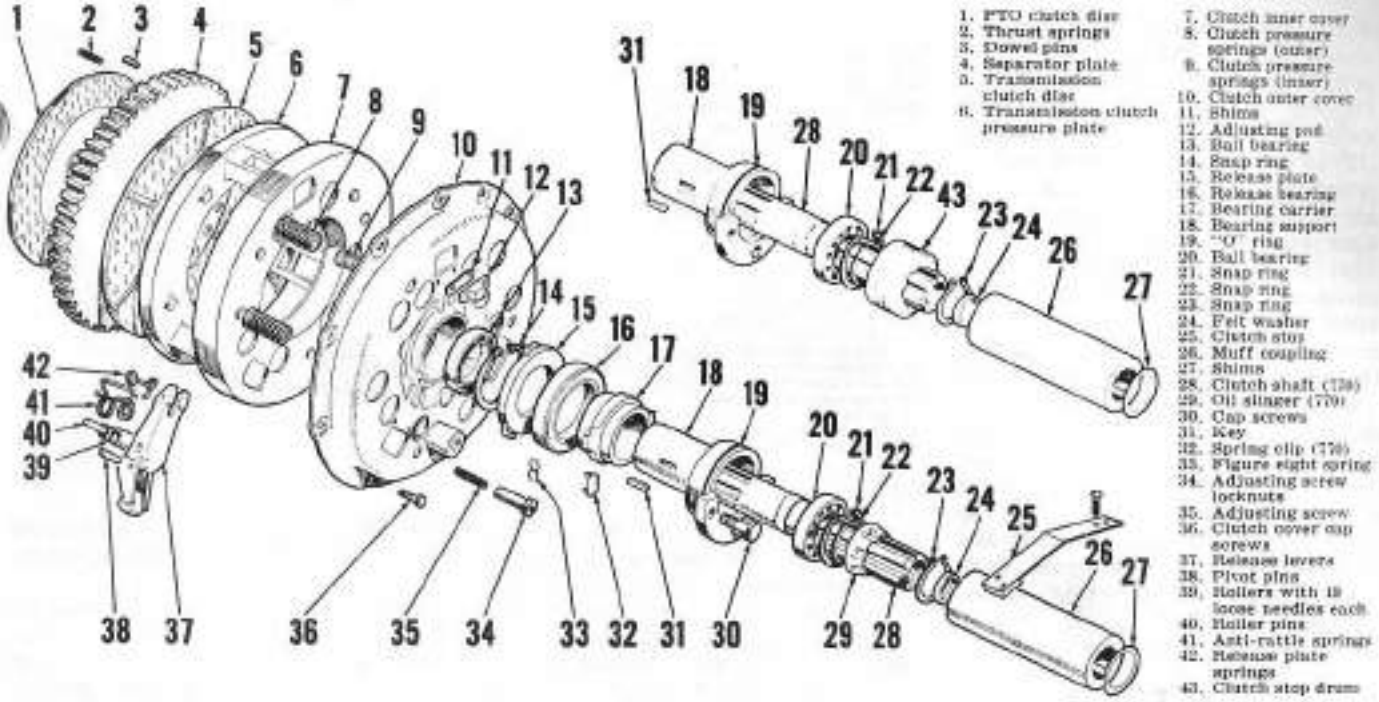


**Fig. 92 — Exploded view showing typical dual clutch assembly used on all models except 1200. On model 770, and early models 880 and 990, spring loaded thrust pad assembly (25) is attached to underside of transmission cover. Friction of pad against muff coupling (26) stops clutch shaft from turning whenever clutch is released; inspect pad and spring when transmission cover is removed.**

**Transmission Clutch Inner Spring—All Models**

Spring part No. .....902513
Color Code .....Brown
Lbs. Pressure @ 2.60 Inches ....82

**PTO Clutch Springs—Model 990**

Spring Part No. .....902514
Color Code .....Pink
Lbs. Pressure @ 2.26 Inches ...117

**PTO Clutch Spring—All Models Except 990**

Spring Part No. .....900261
Color Code .....Buff
Lbs. Pressure @ 2.26 Inches ....91

138. To reassemble and adjust, place flywheel on workbench with clutch friction surface up, then proceed as follows:

Equally space four 0.310 thick spacers on PTO clutch friction surface of flywheel; refer to cross-sectional view in Fig. 94. Insert separator plate in flywheel on top of the 0.310 thick spacers, then equally space four 0.349 thick spacers on transmission clutch friction surface of separator plate so that each 0.349 thick spacer is just above each 0.310 thick spacer. Place a straight edge across center of separator plate as shown; the straight edge must be less than 0.349 thick. Place pressure plate on top of the four 0.349 thick spacers.

Place clutch inner cover down over release lever lugs on pressure plate, then insert the six outer (large) transmission clutch springs through holes of inner cover. On models 770 and 3800, insert the three inner (small) transmission clutch springs inside alternate outer springs; on other models, six inner springs are used. Place the six PTO clutch springs on bosses of inner cover, then place the spring cups over the springs. Carefully place clutch cover down over the spring cups and the lugs of pressure plate. Turn the assembly as necessary so that the clutch cover bolt and dowel pin holes are aligned with flywheel, taking care that the spacers and straight edge are not moved out of proper position. Insert the long studs through cover bolt holes into flywheel, then install and evenly tighten the stud nuts until cover flange is tight against flywheel.

Stick the 19 loose needle rollers into each release lever roller with grease, then assemble in the release levers. Install the release levers, anti-rattle springs, release plate and springs. Move the unit to a press or use other means to actuate the release levers approximately six times to be sure release linkage is seated. Take care that the spacers and straight edge are not dislodged.

Refering to Fig. 94, measure distance (Y) between lower face of release plate (15) and top of straight edge. This measurement, added to thickness (Z) of straight edge, gives

A. 0.874 inch
B. 0.915 inch
C. 1.420 inch
D. 1.771 inch
E. ⅝-inch
F. 1½ inches
G. 1¾ inches
H. 5 inches

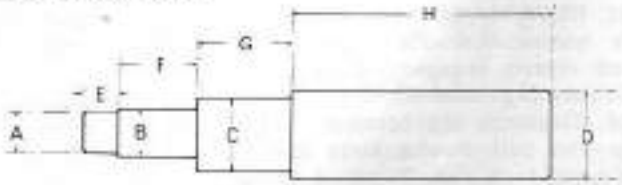


**Fig. 93 — View showing clutch pilot necessary for installation of dual plate clutch. Refer to legend for dimensions indicated by call-outs A through H.**

**Fig. 94 — Cross-sectional view showing placement of spacers and straight edge for assembly adjustment of clutch. Add thickness (Z) of straight edge to measurement (Y) to obtain release lever height. Vary shims at location shown to adjust lever height to dimensions as outlined in text. Refer to exploded view in Fig. 92 for numerical legend.**

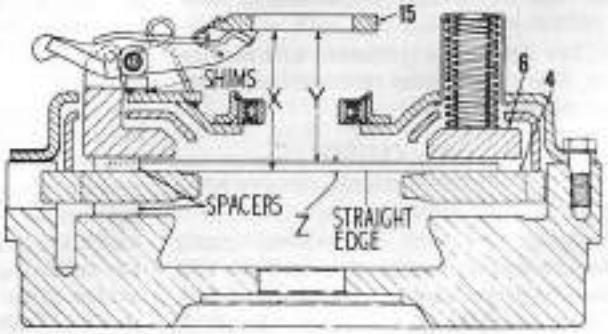

clutch release lever setting (X) which should be 3.445 inches on model 990 or 3.345 inches on other models. Shims (11—Fig. 92) are added between clutch cover and release lever stops (12) to increase release lever setting, or removed to decrease setting. Shims are available in thicknesses of 0.002, 0.003, 0.010 and 0.020. A variation of 0.001 in shim pack thickness will change release lever adjustment about 0.0045. Take release lever measurement at each lever and adjust all levers to as near equal height as possible.

With release lever stops properly shimmed, place nuts or other suitable spacers between outer ends of release levers and clutch cover, then loosen stud nuts until the spacers take up spring tension, remove the nuts and studs and clutch components from flywheel. Reinstall flywheel, clutch and clutch shaft.

# CLUTCH
## (Model 1200)

### ADJUSTMENT

139. **TRANSMISSION CLUTCH.** Clutch pedal free play (F—Fig. 95) should be 7/8 to 15/16 inch. Loosen lock nut and turn adjusting nut (A) on clutch rod as required to obtain correct free play, then tighten lock nut.

140. **PTO CLUTCH.** When PTO clutch lever is in forward (engaged) position, the upper end of lever must be free to move a distance (G) of 1 7/8 to 2 1/8 inches. To adjust lever free play, loosen lock nut and turn adjusting nut (B) on clutch rod as required to obtain correct adjustment, then tighten lock nut.

141. **CLUTCH STOP MECHANISM.** With transmission clutch pedal released (clutch engaged), push down on clutch stop lever (C—Fig. 95) by hand. Clearance (D) between clutch lever and bolt on stop lever should then be 1/4 to 3/8 inch. To adjust clutch stop mechanism, loosen lock nut (E) and turn bolt in stop lever as required to obtain correct adjustment, then tighten lock nut.

For internal adjustment and service of the clutch stop mechanism, refer to paragraph 145.

### R&R CLUTCH

142. To remove clutch, remove hood and proceed as follows:

Drain fuel tank, disconnect wiring and hourmeter cable, then remove fuel tank and instrument panel as a unit. Drain oil from steering gear housing, disconnect drag link from steering arm, then unbolt and remove steering gear assembly. Unbolt and remove operator's seat. Lift rear linkage and support on latch, then remove rear lift cylinder oil pipe. Unbolt and remove transmission cover and shift lever assembly, noting that special washers are used on the four bolts adjacent to gear shift levers; six bolts are located in steering gear cavity in cover. Remove engine starter, then unbolt and remove clutch housing.

Drain transmission, remove PTO drive housing from rear end of tractor as outlined in paragraph 192, then withdraw PTO drive (cardan) shaft from rear end of tractor.

Remove the two wire rings (28—Fig. 98) from ends of muff coupling (31) and extract the two plungers (30). On six-speed models, disengage snap ring at rear end of muff coupling and slide the snap ring and coupling rearward until coupling is disengaged from clutch shaft (36). On 12-speed transmissions, disengage snap ring at front side of muff coupling and slide snap ring and coupling forward until coupling is disengaged from transmission input shaft. Be sure not to lose any shims (29) from transmission input shaft. On all models, unbolt the clutch shaft brake unit (see Fig. 102), remove the coupling (18) and let brake unit hang on muff coupling. Remove pivot bolt from left side of PTO clutch release fork and the cotter pin from right hand side of fork. The PTO clutch release levers must be kept from moving by fastening them to clutch cover using special hooks (part No. 962188) or wire. Remove the nine long bolts (10—Fig. 98) retaining clutch assembly to flywheel; caution should be taken not to remove any of the six short cap screws (9) retaining clutch cover (11) to separator plate (4). Lift the clutch assembly with clutch release bearings, shaft, support (37) and, on 12-speed models, the clutch shaft brake assembly from tractor.

To reinstall clutch, reverse removal procedure. Note that both the clutch shaft and transmission input shaft have one tapered spline; the plunger holes in muff coupling must be aligned with these splines. When installing muff coupling plungers, note that inner ends of plungers are chamfered. Install front plunger with chamfer leading and rear plunger with chamfer trailing as the chamfer must be against the non-driving side of the shaft splines. Tighten starter to clutch housing bolts to a torque of 30Ft.-Lbs. and transmission cover and clutch cover retaining bolts to a torque of 75 Ft.-Lbs. Adjust clutch stop before reinstalling transmission and clutch covers; refer to paragraph 145. After tractor is assembled, refer to paragraphs 139, 140 and 141 for external adjustments.

### OVERHAUL CLUTCH

143. With clutch removed as outlined in paragraph 142, withdraw clutch shaft with release bearings, bearing support and related parts from clutch unit. Remove engine flywheel and place flywheel on bench with clutch friction surface up. Place PTO friction disc on flywheel, then install clutch assembly on flywheel using nine 5/16 UNC x 7 inch stud bolts, flat washers and nuts. Remove the six cap screws retaining clutch cover to separator plate, disconnect PTO release levers (15—Fig. 98) from eye bolts (27L) and disconnect the transmission clutch release levers (40) from lugs on transmission clutch pressure plate (8). Hold the stud bolts from turning while evenly loosening the nuts. When free of all spring pressure, remove the nuts and disassemble clutch.

On early units equipped with transmission clutch pressure springs color

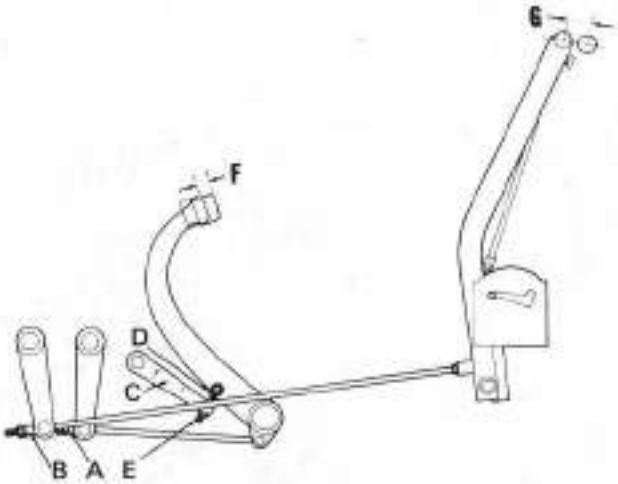


**Fig. 95 — Drawing showing adjustment points for model 1200 transmission clutch pedal linkage and PTO clutch release lever linkage. Refer to paragraphs 139, 140 and 141 for adjustment procedure and specifications.**

A. Free pedal adjusting nut
B. PTO lever free play adjusting nut
C. Clutch stop lever
D. Clutch stop lever screw clearance
E. Stop lever adjusting screw
F. Clutch pedal free play
G. PTO lever free play

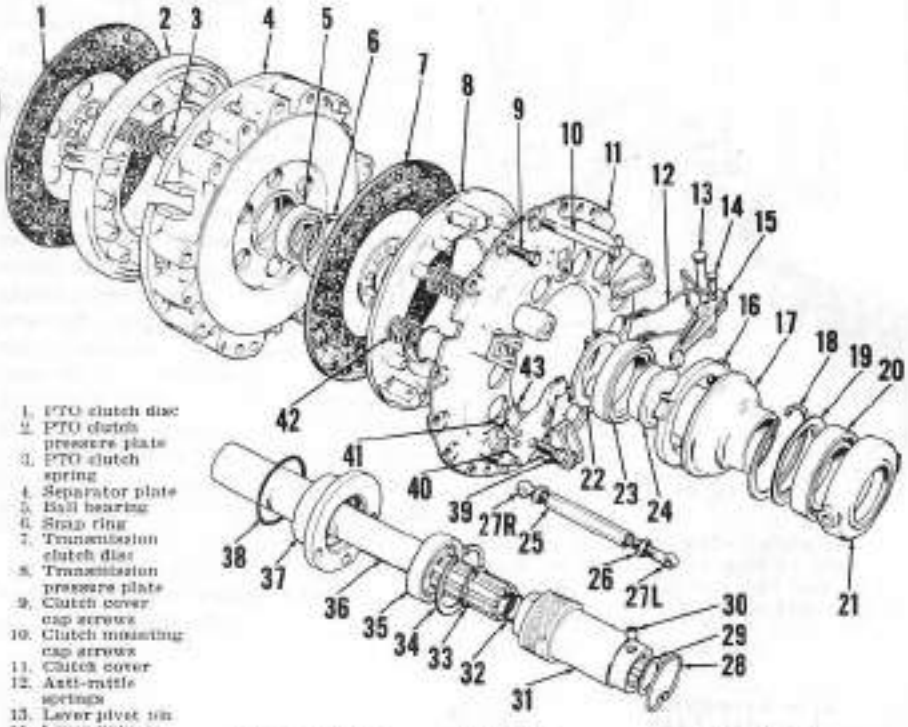

1. PTO clutch disc
2. PTO clutch pressure plate
3. PTO clutch spring
4. Separator plate
5. Ball bearing
6. Snap ring
7. Transmission clutch disc
8. Transmission pressure plate
9. Clutch cover cap screws
10. Clutch mounting cap screws
11. Clutch cover
12. Anti-rattle springs
13. Lever pivot pin
14. Lever linkage pin
15. PTO clutch release levers
16. PTO clutch release plate
17. PTO thrust plate
18. Snap ring
19. Shield
20. Release bearing
21. Bearing housing
22. Transmission clutch release plate
23. Thrust bearing
24. Bearing carrier
25. Turnbuckle
26. Lock nuts
27L. Eye bolt, L.H.
27R. Eye bolt, R.H.
28. Wire retaining rings
29. Shims
30. Flangers
31. Muff coupling
32. Sealing ring
33. Snap ring
34. Snap ring
35. Ball bearing
36. Clutch shaft
37. Bearing support
38. "O" ring
39. Adjusting screw
40. Transmission clutch release levers
41. Release lever pins
42. Clutch pressure springs
43. Release lever springs

**Fig. 98 — Exploded view of model 1200 clutch. A separate release bearing, plate and release levers are used for each clutch unit.**

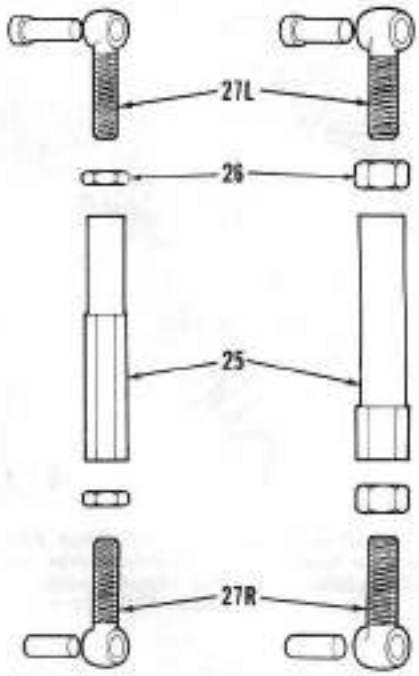


**Fig. 99 — Views showing "old type" and "new type" PTO clutch linkage turnbuckle, eye bolts and lock nuts. Parts are interchangeable in complete sets of three only as different weight of old and new units would throw clutch out of balance if only one unit was renewed with different type. Refer to Fig. 98 for legend.**

coded lavender and black, discard the springs and install new dark blue/light green color coded springs on reassembly.

Transmission clutch friction disc thickness (new) is 0.340 and PTO friction disc thickness (new) is 0.324. Check the clutch springs against the following specifications:

**Transmission Clutch Springs:**

Part Number .....962292
Color Code Dark Blue/Light Green
Lbs. Pressure @ 1.69 inches ....135

**PTO Clutch Springs:**

Part Number .....625209
Color Code .....Red
Lbs. Pressure @ 1.41 inches 131-140

If necessary to renew one of the PTO clutch linkage assemblies (25, 26 & 27), refer to Fig. 99 for view showing old and new types used. If necessary to renew any part of one link, like parts must be used; links must be installed in like sets of three only to maintain clutch balance.

Early clutches were fitted with cap screws (39—Fig. 98) in transmission clutch release levers. Where cap screws are encountered in this location, it is recommended that they be renewed using socket head screws (part No. 923990) and heavier lever retaining springs (part No. 923989).

Reassemble clutch with new part as required by reversing disassembly procedure. After clutch is fully assembled on flywheel, adjust transmission release lever adjusting screws (39) so that face of release plate (22) is 5.215 to 5.385 inches from face of flywheel. Adjust PTO clutch links so that PTO release plate (16) face is 6.27 to 6.37 inches from face of flywheel. Be sure linkage lock nuts and clutch cover to separator plate cap screws are tight, then remove clutch from flywheel. Install flywheel on engine crankshaft, then reinstall clutch.

# CLUTCH SHAFT BRAKE

## Friction Pad Type

144. All models with single clutch, model 770 with dual clutch and early models 880 and 990 with dual clutch have a spring loaded friction pad (23—Fig. 86 or 25—Fig. 92) that rides against muff coupling connecting clutch shaft to transmission input shaft.

No adjustment of the friction pad type clutch stop is required. The spring is attached to underside of transmission cover and the spring and pad should be inspected whenever transmission cover is off. If the clutch shaft does not stop turning within a few seconds after clutch is fully released, the pad may be worn out or the spring broken or weak.

## Brake Band And Drum Type

145. Refer to Figs. 100, 101 and 102. Models 880 and 990 except early production, and models 780, 3800 and 4600 with dual clutch are equipped with brake unit as shown in Fig. 100. Model 1200 clutch brake unit is shown in Figs. 101 and 102.

To adjust model 1200 unit with transmission cover removed, refer to Fig. 102 and proceed as follows: Loosen nuts (N3) on lower end of spring stud, adjust upper nut so that spring compressed length is 2⅜ inches, then tighten bottom nut. Using a feeler gage, adjust anchor stud nuts (N1 and N2) so that clearance between brake band and drum on muff coupling is 0.030.

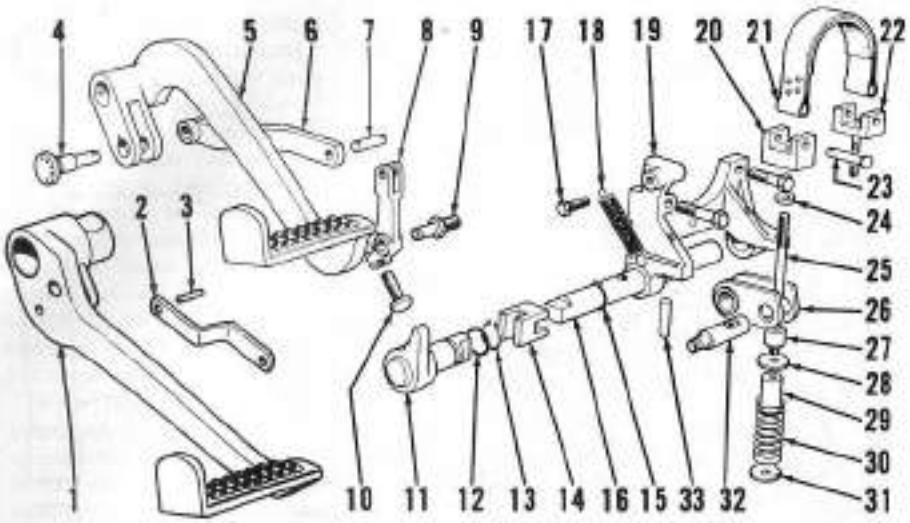


**Fig. 100 — Exploded view of clutch stop (clutch shaft brake) components and actuating linkage typical of all models except model 1200; refer to Figs. 101 and 102 for model 1200 clutch stop. Two clutch pedals are shown: models 780 and 3800 use pedal (1); models 880, 990 and 4600 are fitted with pedal (5).**

1. Clutch pedal, 780 & 3800
2. Actuating link, 780 & 3800
3. Pin, 780 and 3800
4. Pin, 880, etc.
5. Clutch pedal, 880 etc.
6. Link, 880 etc.
7. Pin
8. Linkage arm
9. Arm pivot pin
10. Adjusting screw
11. Brake lever & shaft
12. "O" ring
13. Snap ring
14. Coupling
15. Snap ring
16. Inner shaft
17. Spring anchor bolt
18. Spring
19. Mounting bracket
20. Fork
21. Brake band
22. Anchor fork
23. Band pins
24. Spacer
25. Spring stud bolt
26. Brake arm
27. Spacer
28. Special washer
29. Spacer
30. Spring
31. Special washer
32. Trunnion pin
33. Pin

On all other models, refer to Fig. 100 and proceed as follows: Disconnect link (6) from actuating lever (8). Check to see that upper end of stud (25) is flush with upper side of yoke (20); if not, loosen lock nut and adjust as necessary. Adjust nuts on lower end of stud (25) so that compressed length of spring (30) is 2 17/32 inches. Adjust nuts on anchor stud (22) so that brake band just rests on drum without tension. Disconnect spring (18), pull down on spring (30) and stud (25), then check clearance between pin (32) and stop on mounting bracket (19); readjust clearance to 1/16-inch by turning stud (25) in yoke (20) and tighten lock nut. Reconnect link (6) and make external adjustment as outlined in paragraph 131 or 132.

Use Figs. 100, 101 and 102 as disassembly and reassembly guides when servicing the clutch brake unit.

**Fig. 102 — Assembled view of model 1200 clutch brake mechanism. Refer to Fig. 101 for exploded view.**

N1. Adjusting nut
N2. Adjusting nut
N3. Adjusting nuts
1. Clutch pedal
2. Mounting bracket
5. Brake band
15. Pedal pin
18. Coupling
21. Brake shaft and arm
22. Adjusting screw

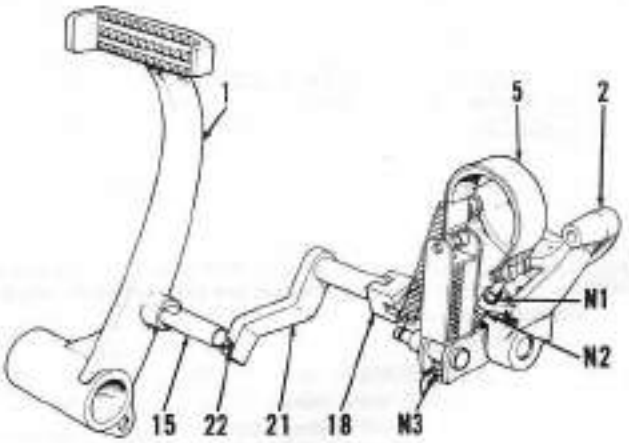


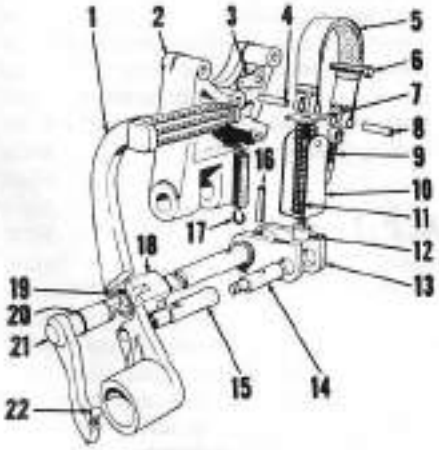


**Fig. 101 — Exploded view of model 1200 clutch stop mechanism; refer to Fig. 102 for assembled view showing adjustment points.**

1. Clutch pedal
2. Mounting bracket
3. Spring anchor
4. Brake band pin
5. Brake band
6. Mounting bolts
7. Stud & plate assembly
8. Brake band pin
9. Anchor eye bolt
10. Spring holder
11. Spring
12. Spacer
13. Brake arm
14. Trunnion pin
15. Pedal pin
16. Pin
17. Spring
18. Coupling
19. Snap ring
20. "O" ring
21. Brake shaft & arm
22. Adjusting screw

**Fig. 103 — Exploded view of model 770 shift lever assemblies, shift rails and forks. Balk spring (9) holds shift lever in range shift selector (19) and is retained in transmission cover by two cap screws (10).**

1. Gear shift lever
2. Dust cover
3. Ball housing
4. Gasket
5. Support plate
6. Tab washer
7. Range/creeper shift lever
8. Spacer
9. Balk spring
10. Cap screws (2)
11. 2nd/3rd selector
12. Low/reverse selector
13. 2nd/3rd shift rail
14. Low/reverse shift rail
15. Creeper drive selector
16. Creeper drive shift rail
17. Range shift rail
18. Range shift fork
19. Range selector
20. Detent ball
21. Detent spring
22. Low/reverse shift fork
23. 2nd/3rd shift fork
24. Detent spring
25. Detent ball
26. Interlock pin
27. 3/16" x 1 1/4" pins (2)

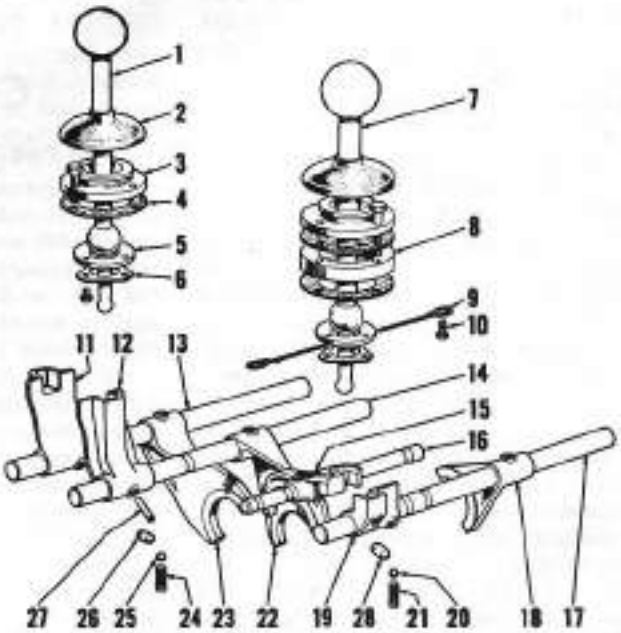

# TRANSMISSION

## LUBRICATION

### Caution: All Models

146. Lubricating oil for the transmission and differential unit is also utilized for the hydraulic system fluid. Therefore, whenever removing transmission cover or servicing any part of the transmission, the same care in keeping the parts clean and keeping foreign material out should be observed as when working on the hydraulic system. Refer to paragraph 234 for information regarding the lubricant and system filter.

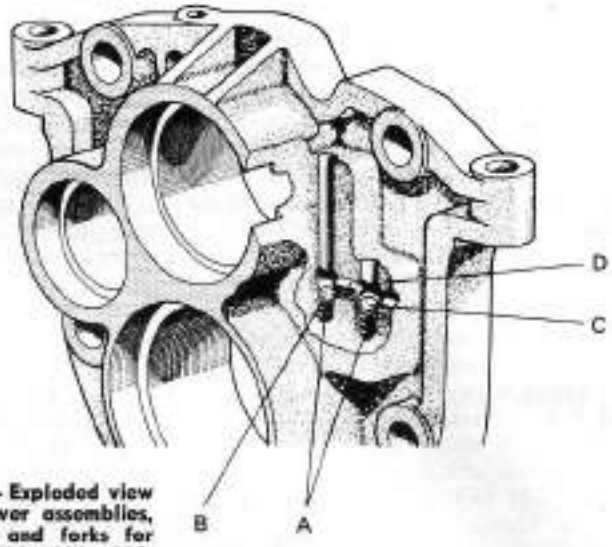


**Fig. 106—Cut-away view of transmission front plate for six-speed transmission on models 780, 880, 990, 3800 and 4600, showing detent ball and spring location and interlock pin for low/reverse and 2nd/3rd shift rails. Other models are similar.**

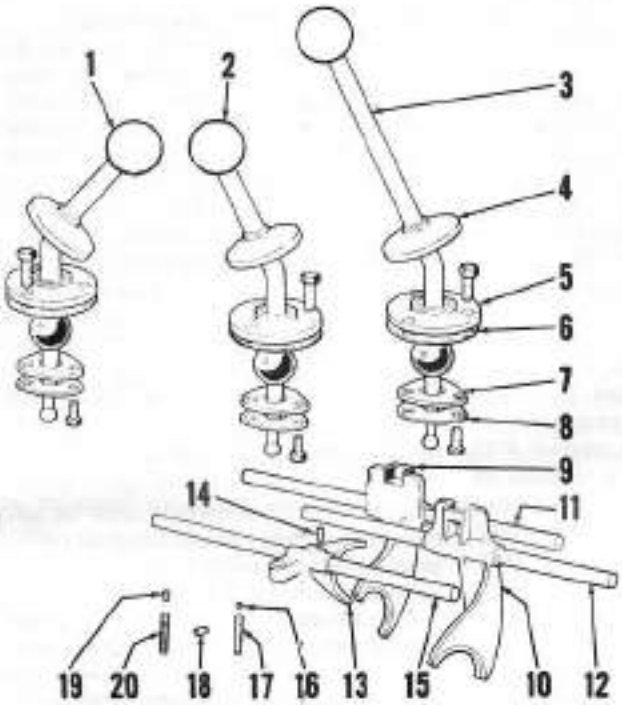


**Fig. 104 — Exploded view of shift lever assemblies, shift rails and forks for models 780, 880, 990, 3800 and 4600. Creeper shift lever (1) engages shift fork (31—Fig. 108) on 12-speed models and is not used on six-speed transmissions.**

1. Creeper shift lever
2. Range shift lever
3. Gear shift lever
4. Dust cover
5. Ball housing
6. Gasket
7. Support plate
8. Tab washer
9. 2nd/3rd shift fork
10. Low/reverse shift fork
11. 2nd/3rd shift rail
12. Low/reverse shift rail
13. Range shift fork
14. Pins (3)
15. Range shift rail
16. Detent balls (2)
17. Detent springs (2)
18. Interlock pin
19. Detent plunger
20. Detent spring

## SHIFT LEVERS, RAILS & FORKS

### All Models

147. Refer to Fig. 103, 104 or 105 for exploded views showing shift levers, rails and forks.

The shift lever assemblies are removable on all models by unbolting shift lever ball retainer from top of transmission cover. To disassemble, straighten the tab washer and unbolt lever support plate from bottom of ball retainer. Refer to appropriate exploded view for disassembly and reassembly guide and for identification of the different levers if all are removed at same time. Use new gaskets when reassembling and be sure to secure support plate cap screws by bending tab washer against all screws.

The shift rails are carried in the transmission assembly end plates. Refer to transmission overhaul procedure for removal and assembly of the shift rails and forks. Fig 106 shows cut-away view of typical transmission front plate shift rail bores, detent balls and spring and interlock pin location.

## R&R TRANSMISSION COVER

### Models 770, 780 and 3800

148. To remove transmission cover, proceed as follows: Remove hood, disconnect fuel lines from tank, wiring from instrument panel and engine stop cable from carburetor or fuel injection pump. On model 3800, unbolt choke cable bracket from instrument panel. Unbolt and remove fuel tank and instrument panel as a unit. Remove cover from bottom of clutch housing and working through opening, remove the figure-eight springs retaining clutch release collar to fork. Disconnect wiring from starter and remove starter. Disconnect throttle

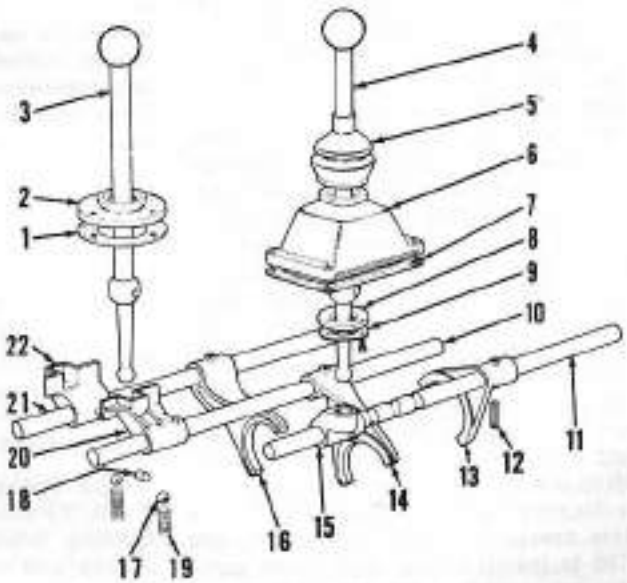


**Fig. 105 — Exploded view of model 1200 shift lever assemblies, shift rails and forks for six-speed transmission. On 12-speed models, an open range selector (15) is used allowing range shift lever (4) to engage creeper drive selector (28—Fig. 111). A balk spring (see 9—Fig. 103) attached to transmission cover keeps shift lever engaged in open range selector. Support plate (8) and tab washer (9) attached to ball housing (2) are not shown.**

1. Gasket
2. Ball housing
3. Gear shift lever
4. Range/creeper shift lever
5. Dust boot
6. Ball housing
7. Gasket
8. Support plate
9. Tab washer
10. Low/reverse shift rail
11. Range shift rail
12. Pins (8)
13. Range shift fork
14. Low/reverse shift fork
15. Range selector (six-speed)
16. 2nd/3rd shift fork
17. Detent balls
18. Interlock pin
19. Detent springs
20. Low/reverse selector
21. 2nd/3rd shift rail
22. 2nd/3rd selector

control rod and remove steering arm from steering gear, then unbolt and remove steering gear assembly. The transmission cover can then be unbolted and removed from tractor. Note that one cap screw is located in steering gear cavity in top of cover and that five cap screws extend through rear axle housing into rear end of cover.

To reinstall cover, first unbolt and remove the shift lever assemblies; refer to Fig. 103 or Fig. 104. If rear axle to cover and main frame gasket is damaged, remove all traces of gasket above main frame, then carefully cut top portion of new gasket and cement into place. Position cover on main frame using new cover gaskets and loosely install cover retaining cap screws. Using new gaskets, reinstall shift lever assemblies; be sure that shift levers correctly engage shift rail gear selector forks. Tighten cover retaining cap screws that extend through rear axle housing then tighten the cover to main frame cap screws. Reinstall clutch collar to clutch fork figure-eight springs, adjust clutch then complete reassembly of tractor.

### Models 880 and 4600

149. To remove transmission cover, proceed as follows: Disconnect throttle control rod and remove steering gear arm from steering gear shaft. Unbolt and remove steering gear and shift lever assemblies from top of transmission cover. Unbolt and remove transmission cover from tractor main frame. Note that five cover retaining cap screws extend through rear axle casting into rear end of cover.

If rear axle to cover and main frame gasket is damaged, remove all traces of gasket extending above tractor main frame; then, carefully cut top portion from new gasket and cement into place on rear axle casting. Using new gaskets, position cover on tractor main frame and loosely install all cover retaining cap screws. Install the shift lever assemblies using new gaskets and taking care that levers correctly engage shift rail forks. Tighten the rear cover retaining cap screws that extend through rear axle casting, then tighten remaining cover cap screws. Complete remainder of reassembly by reversing disassembly procedure.

### Model 990

150. To remove transmission cover, first disconnect throttle control rod and remove steering arm from steering gear, unbolt and remove steering gear, unit, then proceed as follows:

Remove the cap screws at front end of cover that extend into clutch cover, then remove the wedge and shims located between transmission cover and clutch cover. Unbolt and remove the shift lever assemblies, then unbolt and remove transmission cover. Note that five cap screws extend through the rear axle casting into rear end of transmission cover.

Before reinstalling cover, check the rear axle housing to transmission cover and main frame gasket. If gasket is damaged, remove old gasket extending above main frame, then carefully cut top portion of new gasket and cement into place on rear axle housing. Using new gaskets, position cover on tractor main frame and loosely install all cover retaining cap screws except those extending into clutch housing. Install the shift lever assemblies using new gaskets and taking care that the levers correctly engage the shift rail forks. Tighten the rear cover retaining cap screws that extend through axle housing, then tighten the cover to main frame cap screws. Position the wedge between transmission cover and clutch cover with sufficient number of shims so that wedge will have to be driven into place with soft faced hammer, then install and tighten transmisssion cover to clutch cover cap screws. Fill the steering gear cavity to ½-inch of top, then install steering gear assembly. Note: The long cap screws will have to be inserted in steering gear before positioning it on transmission cover unless the fuel tank and instrument panel assembly has been removed.

### Model 1200

151. Transmission cover removal procedure is as follows: Remove operator's seat assembly and drain lubricant from steering gear housing. Raise the three point hitch lift arms and latch them in place with latch lever of hydraulic system, then remove ram cylinder oil pipe. Remove cap screws at front of transmission cover that extend into clutch housing, then remove the wedge and shims from between transmission cover and clutch housing cover. Unbolt and remove the shift lever assemblies, then unbolt and remove transmission cover. Note that two cap screws are located in steering gear cavity, five cap screws extend through the rear axle housing into rear end of cover, and that four cap screws are located adjacent to the shift levers.

To reinstall transmission cover, follow procedure outlined in paragraph 150 to install cover, shift lever, reinforcing wedge and shims. Reinstall hydraulic lift cylinder oil pipe, unlatch lift arms and, after tractor is fully assembled, bleed lift cylinder as outlined in HYDRAULIC SYSTEM section of this manual. Reinstall steering gear assembly and fill with lubricant to level plug. Reinstall operator's seat assembly.

## R&R TRANSMISSION ASSEMBLY

### Model 770

152. Prior to tractor serial No. 580650, transmission must be removed from rear as outlined in paragraph 156; on model 770 serial No. 580650 and up, transmission can be lifted from main frame as outlined in paragraph 157.

### Models 780, 3800 and 4600

153. On models with 12-speed transmissions, the transmission assembly must be removed from rear as outlined in paragraph 156 unless tractor has been split for removal of clutch assembly.

On models with six speed transmission, the transmission can be removed by lifting from main frame as outlined in paragraph 157; however, as the clutch assembly must first be removed in this procedure, it is usually more convenient to remove transmission from rear as in paragraph 156.

### Models 880 and 990

154. On models with 12-speed transmission, the transmission must be removed from rear as outlined in paragraph 156 unless the tractor has been split for removal of clutch assembly.

On models with six speed transmission and single plate clutch (non-Livedrive models), the transmission can be removed by lifting from main frame as outlined in pargraph 157.

On models with six-speed transmission and dual clutch (Livedrive models) prior to model 880 serial No. 533605 or model 990 serial No. 487806, the transmission must be removed from rear as outlined in paragraph 156. Procedure outlined in paragraph 157 can be used on six-speed, dual clutch model 880, serial No. 533605 and up, or model 990, serial No. 487806 and up; however, since the clutch assembly must be removed, it is usually quicker to follow procedure as outlined in paragraph 156.

### Model 1200

155. To remove transmission assembly from model 1200, follow procedure outlined in paragraph 157.

### R&R Transmission From Rear

156. To remove transmission by splitting tractor between rear axle casting and main frame, proceed as follows:

Unbolt and remove drawbar and lift linkage. Refer to paragraph 192

and remove the PTO housing and gear unit. Except on models 880 and 990 with single clutch, withdraw PTO cardan (drive) shaft from rear end of tractor. Unbolt hydraulic pump intake pipe from hydraulic pump. Remove both final drive units as outlined in paragraph 174. Remove oil seal housing from right end of axle housing, then reaching through end of opening, disengage differential lock sliding sleeve and spring from the differential right side gear. Attach hoist to rear axle housing, then unbolt and remove housing from tractor main frame and transmission cover; axle housing will have to be pried off locating dowel pins. Following general procedures as outlined in paragraph 148, 149 or 150, remove transmission cover. Remove the transmission oiling tubes. Remove the cap screws, spacer bushings and, where used, the dowel pins retaining transmission to tractor main frame. Attach hoist to transmission, slide assembly rearward and lift from main frame. On models 780, 880, 990, 3800 and 4600 with 12-speed transmission, retain the bronze thrust washer located between drive gear (22—Fig. 108) and retainer (21). On other models, be sure not to lose any of the shims located at rear end of coupling joining clutch shaft to transmission input shaft.

To reinstall transmission, reverse removal procedure and observe the following: On models 780, 880, 990, 3800 and 4600 with 12-speed transmission, stick the bronze thrust washer between input shaft retainer and drive gear using heavy grease. On other models, place the muff coupling shims on transmission input shaft. Position the transmission assembly on tractor main frame and install the retaining cap screws without the spacer bushings. Tighten the cap screws securely, then loosen the nuts on front end of spacer bars. Tap each spacer bar with soft faced hammer to align the transmission unit, then retighten the spacer bar nuts to a torque of 70 Ft.-Lbs. Remove the transmission retaining cap screws, insert the spacer bushings in the cap screw holes, then reinstall and tighten the retaining cap screws to a torque of 100 Ft.-Lbs. On models with muff coupling, check muff coupling end float; if not within limits of 0.010 to 0.040, disengage snap ring at front end of the coupling, slide coupling forward and add or remove shims as required. Complete balance of reassembly by reversing removal procedure, refill transmission with proper lubricant and bleed the hydraulic system as outlined in HYDRAULIC SYSTEM section of this manual.

### R&R Transmission From Above

157. To remove transmission without removing rear axle housing from tractor main frame, proceed as follows:

Except on models 880 and 990 with single clutch, remove the PTO housing and gear assembly as outlined in paragraph 192, then withdraw the PTO cardan (drive) shaft from rear end of tractor. Remove the final drive units as outlined in paragraph 174. Remove the oil seal housing from right end of axle housing and reaching through the opening, disengage differential lock sleeve and spring from differential side gear.

On models 880 and 990 with dual clutch, and on models 780, 3800 and 4600, remove the clutch assembly as outlined in paragraph 133 or 134. Note: Unless it is necessary to service clutch unit, it is usually quicker to remove transmission from these models by following procedure as outlined in paragraph 156.

Except on models 780, 3800 and 4600, and models 880 and 990 with dual clutch, remove transmission cover as outlined in paragraph 148, 149, 150 or 151. Disengage the snap ring at front side of muff coupling, then slide snap ring and coupling forward as far as possible.

Remove the transmission oiling tubes and the cap screws, spacer bushings and, where used, the dowel pins retaining transmission end plate(s) to tractor main frame. Attach hoist to transmission and lift the assembly, front end first, out of tractor main frame. Slide the transmission forward as it is lifted to clear the rear axle housing.

To reinstall transmission, reverse removal procedure and observe the following: Using hoist, lower the transmission unit, rear end first, into tractor frame. Slide the transmission unit rearward as the front end is lowered into position. Install the retaining cap screws without the spacer bushings, tighten the cap screws and loosen the four spacer bar nuts. Tap each spacer bar with a soft faced hammer to align transmission end plates, then tighten the spacer bar nuts to a torque of 70 Ft.-Lbs. Remove the cap screws, install the spacer bushings, then reinstall and tighten the cap screws retaining transmission to tractor main frame to a torque of 100 Ft.-Lbs. Be sure the muff coupling shims are on transmission input shaft, slide coupling into position and engage snap ring in groove at front side of coupling. Vary shim thickness at rear side of coupling as required to obtain coupling end float of 0.010-0.040.

On model 1200, the muff coupling plungers must be installed so that chamfered end of front plunger is leading and rear plunger chamfered end is trailing as the chamfer must be against the non-driving side of shaft splines.

Complete balance of reassembly by reversing disassembly procedure. Refill the transmission with proper lubricant and bleed the hydraulic system.

## OVERHAUL TRANSMISSION

### Model 770

158. With transmission removed, refer to Fig. 107 and proceed as follows:

With transmission still fully assembled, block the transmission gears to lock pinion shaft (33) from turning and loosen the self-locking nut (52) (left hand threads) on front end of pinion shaft. Mark the differential bearing caps (29) so they can be reinstalled in same position, then remove the caps and the differential assembly. Refer to paragraph 171 for overhaul of differential unit.

Remove the nuts from front end of the spacer bars (16 & 32), then remove front end plate (45) with shift rails and forks, shafts and gears. Remove and identify shaft end play adjusting shims from the idler shaft rear bearing (36) and drive shaft rear bearing (23) bores in rear end plate (31); retain the shims for reassembly. Withdraw the idler shaft (38) and bearings (36 & 40) assembly from front end plate; remove bearing from the integral idler shaft and gear assembly if necessary.

Drive out the pin retaining high-low range shift fork (18—Fig. 103) to shift rail (17) and withdraw the driveshaft (17—Fig. 107), complete with bearings, gears and shift fork. To disassemble driveshaft, press reverse idler gear (20), thrust washer (22) and bearing (23) from rear end of shaft. Bushing (18), if not pressed from shaft with idler gear, can now be removed in same manner. Slide high-low range gear (15) from rear end of shaft and press or pull bearing (13) from front end of shaft. Rotate the high-low shift rail until pin-retaining shift lever fork (19—Fig 103) can be driven out, remove the fork and withdraw the rail rearward out of front end plate. Catch the detent ball (20) and spring (21) as rail is withdrawn, then remove the interlock plunger (28).

Remove the nut (52—Fig. 107) from end of pinion shaft and the cap screws

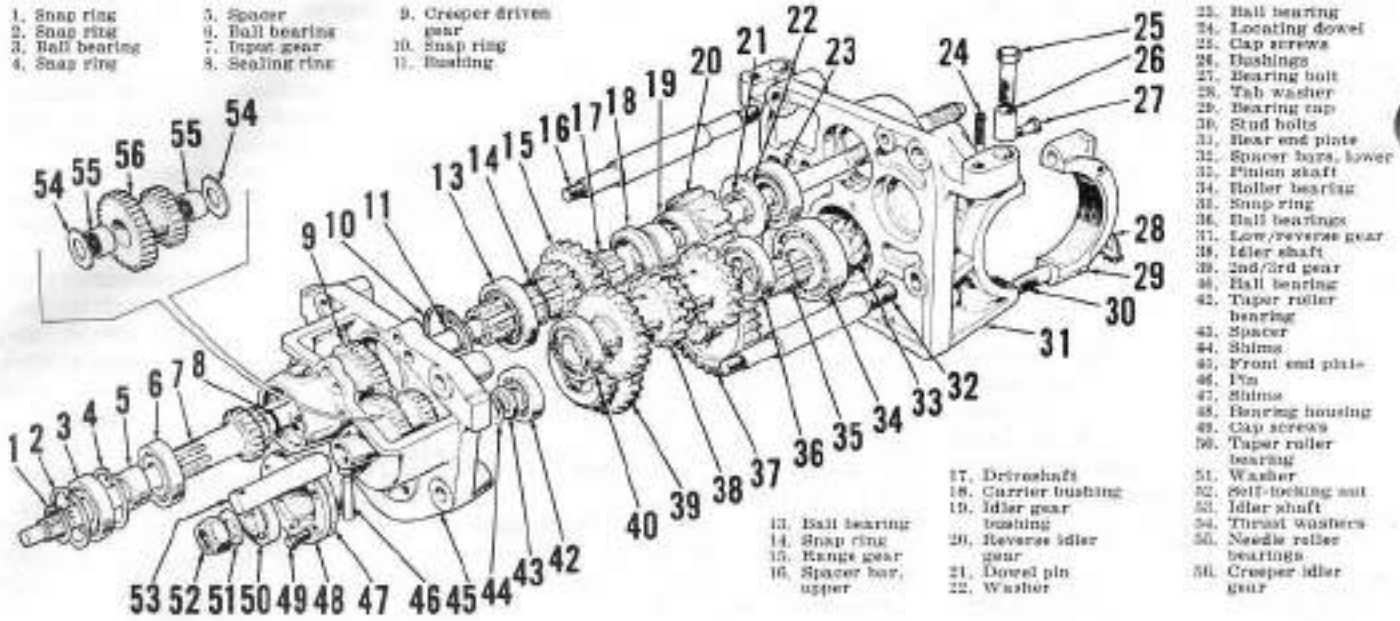


**Fig. 107 — Exploded view of model 770 transmission assembly. Shift rails are carried in bores of front (45) and rear (31) transmission end plates; refer to Fig. 103 for view showing shift rails and forks. The end plate retaining cap screws (25) seat on bushings (26) allowing the transmission to float. Overtightening the cap screws will crush the bushings causing transmission to be held rigidly, resulting in excessive gear noise. Note "Livedrive" (dual clutch) model is shown.**

(49) that retain bearing housing (48) to front end plate. Screw two ⅜-inch UNC cap screws into the tapped holes in bearing housing and pull bearing housing from front end plate while tapping front end of pinion shaft with soft faced hammer to prevent shaft from being withdrawn with bearing housing. Retain the shims (47) located between bearing housing and front end plate for reassembly. Lower the pinion shaft from shifter forks after bearing housing is removed and withdraw the pinion shaft assembly from front end plate. Tag the front bearing (50) cone and inner race assembly so that it can be reinstalled in same location. Press pinion shaft from the gears (37 & 39) and bearing cone (42). Retain the spacer (43) and shims (44) for reassembly. Remove bearing (42 & 50) cups from bearing housing (48) if necessary to renew bearings.

Remove the 1st/reverse, 2nd/3rd and creeper gear shift forks, rails, detent balls and interlock plunger following procedure outlined for removal of the high-low shift rail assembly.

After removing the creeper gear shift fork and rail, the creeper driven gear (9) can be lifted from front end plate. Remove the snap ring (1) and press transmission input shaft/creeper drive gear (7) out to rear of front end plate. Remove snap ring (2) and press front bearing (3) out forward; rear bearing (6) and spacer (5) usually will be removed with shaft/gear (7). If not, they can now be removed from front end plate.

Drive pin (46) out of front end plate and shaft (53), remove shaft from front of end plate and withdraw the creeper idler gear (56) and thrust washers (54) from end plate. Needle roller bearings (55) in creeper idler gear can now be renewed if necessary. Press on lettered end of bearing cage only when installing new bearings; lettered end of bearing cages should be 1/16-inch below flush with each end of gear.

It is usually not necessary to remove the spacer bars from the transmission rear end plate. However, if the two lower bars (32) are loose or have been removed, thoroughly clean the threads on bars and in rear end plate, then apply a few drops of Loctite to rear threads of bars and screw them tightly into rear end plate. The outer race of pinion shaft rear bearing (34) is retained in rear end plate with a ¼-inch diameter bolt (27), two special washers and a self-locking nut. If necessary to renew the bearing, be sure to reinstall the retaining bolt with head to rear as shown; otherwise, end of bolt will interfere with ring gear. Tighten the nut to a torque of 9 Ft.-Lbs.

Throughly clean and examine all transmission parts and renew any not suitable for further service. If necessary to renew the pinion shaft, it will also be necessary to renew the bevel ring gear using a matched pinion and ring gear set. Refer to paragraph 171 for renewing bevel ring gear.

159. To reassemble transmission, reverse disassembly procedure and observe the following:

Lubricate the creeper idler gear needle bearings and thrust washers with grease, then assemble gear, thrust washers and shaft in front end plate and secure with pin.

Install front input shaft bearing rear retaining snap ring (4), press bearing (3) into bore tightly against snap ring (4), then install front snap ring (2). Press rear bearing (6) onto input shaft (7) so that it is seated against gear shoulder, place spacer (5) against bearing and install shaft, bearing and spacer assembly into bore in front end plate from rear, press into front bearing (3) so that spacer contacts front bearing and install shaft retaining snap ring (1). Insert creeper driven gear (9) into front end plate and engage with dog teeth on rear end of transmission input shaft.

To retain detent balls against spring pressure while installing shift rails, use a ⅜-inch diameter rod with one side ground flat to middle of rod for a distance of ⅝-inch from end. Push detent ball down with rod, then slide end of rail against flat on rod and release the detent ball against shift rail. Push rail on past the detent ball until it is in proper position in front end plate.

Clamp pinion shaft tightly in a vise fitted with soft jaws, then assemble

the front bearing housing (48), bearings (42 & 50), spacer (43) and shims (44) on front end of shaft. Install washer (51) and nut (52). Tighten nut to a torque of 200 Ft.-Lbs., then check end play of bearing housing on the pinion shaft. End play must be within limits of 0.001-0.003; add or remove shims (44) as required to obtain the correct end play. Remove nut and bearing housing, retaining bearings, spacer and shims with housing for reassembly. Remove pinion shaft from vise and install 1st/reverse gear (37) with shift fork groove forward and 2nd/3rd gear (39) with shift fork groove to rear. Insert pinion shaft through front end plate and engage shift forks in grooves on gears, then install the bearing housing with shims (47) as removed on disassembly and shims (44) as previously selected. Retaining nut can be tightened when transmission is fully assembled.

If installing new bushing (11) in front end of transmission drive shaft (17), bushing should be recessed 1/16-inch from front end of shaft. Note: Bushing is not used on single clutch models. Press reverse idler carrier bushing (18) onto rear end of driveshaft until seated against shoulder on shaft. Press new bushing (19) into reverse idler gear (20), lubricate bushing with grease and install gear on carrier bushing with chamfered ends of teeth forward. Fit the thrust washer (22) with dowel pin (21) to carrier bushing, then press bearing (23) onto shaft until carrier bushing and thrust washer are held tightly between bearing inner race and shoulder on shaft. Slide high-low range gear (15) onto shaft with shifter fork groove to rear. Install snap ring (14) in groove on shaft, then press front bearing (13) onto shaft until seated against snap ring. Fit high-low range shifter fork in groove on gear, then install driveshaft assembly in front end plate while sliding fork onto shift rail. Install pin to retain shift fork to shift rail.

Install the two bearings (36 & 40) on the idler shaft and gear unit (38), then fit idler shaft front bearing into front end plate. Place the idler shaft end float adjusting shims and driveshaft shims that were removed on disassembly in their proper bores in rear end plate, then assemble front end plate with shafts, gears, shift rails and forks to the rear end plate and tighten the spacer bar nuts to a torque of 70 Ft.-Lbs. Check end float of driveshaft and idler shaft. Driveshaft assembly end float should be 0.006-0.010 and idler shaft and bearing assembly end float should be

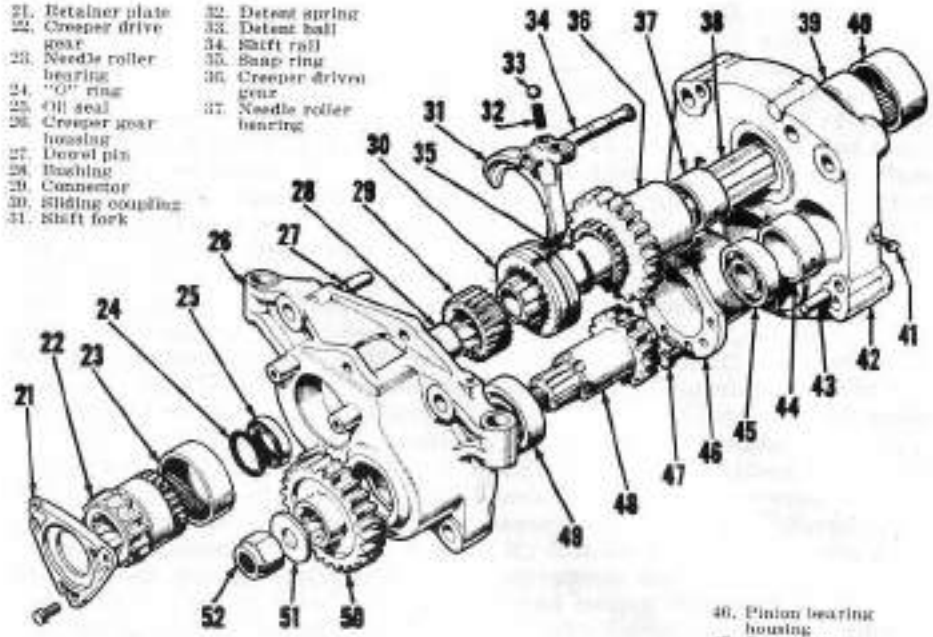


**Fig. 108 — Exploded view of creeper drive unit of 12-speed transmissions for models 780, 880, 990, 3800 and 4600. Front end plate (42) differs from that used on six-speed transmissions; see Fig. 109.**

0.010-0.015. If shaft end float is not within these limits, separate rear end plate from front end plate assembly and add or remove shims in driveshaft and idler shaft bearing bores as required to bring end float within these limits.

Reinstall differential and adjust pinion mesh position, bevel gear backlash and differential carrier bearings as outlined in paragraph 170.

## Models 780, 880, 990, 3800 and 4600

160. Models 780, 880, 990, 3800 and 4600 may be equipped with either a six-speed or a 12-speed transmission. The 12-speed transmission is basically similar to the six speed transmission except that a direct drive/underdrive unit has been fitted on the front end plate providing an underdrive ratio for each of the six forward and two reverse speeds. Refer to paragraph 161 for servicing the underdrive (creeper drive) unit on 12-speed transmissions and to paragraph 163 for service of the six-speed transmission unit for both six and 12-speed models.

161. **CREEPER DRIVE UNIT, 12-SPEED MODELS.** Refer to exploded view of typical creeper drive unit in Fig. 108, then proceed as follows:

Lock transmission gears from turning and remove nut (52) from front end of idler shaft (48). Unscrew nuts from the three transmission spacer bars that extend through creeper drive gear housing (26), then pry gear housing loose from dowel pins (27 & 43) and remove the housing and gear assembly. Push shift rail (34) out toward rear of gear housing, catch detent ball (33) and spring (32) as rail is removed from fork (31), then remove the fork and sliding coupling (30). Remove connector (29) from transmission drive shaft if not removed with coupling.

To remove driven gear (36), pry gear forward a short distance, then slide gear rearward to expose snap ring (35) on transmission driveshaft (38), remove the snap ring and slide gear from shaft. Needle bearing (37) inside gear can be removed at this time. Take care not to lose thrust washer (not shown) from rear hub of gear (36).

On early 880 Implematic and 990 Implematic, idler shaft (48) was supported in a ball bearing (49) at front end and a roller bearing (45) at rear end of shaft. A snap ring at rear side of front bearing (49) retained bearing in creeper drive gear housing. To remove shaft, remove nut and flat washer and press shaft from gear (50) and bearing (49). Remove snap ring and press ball bearing from gear housing. Remove inner race and rollers of rear bearing (45) from rear end of idler shaft and remove outer race

of rear bearing from transmission front end plate.

On all models except early 880 Implematic and 990 Implematic, idler shaft (48) is supported in two tapered roller bearings (45 & 49). To remove shaft, remove nut and washer from front end of idler shaft, then press shaft out of gear (50). Remove the bearing cone and roller assemblies from shaft and the bearing cups from gear housing and transmission front plate. Shims behind rear bearing cup in transmission front end plate control bearing adjustment; retain these shims for reassembly.

On all models, unbolt plate (21) from gear housing, retain any shim washers between plate and housing for reassembly and remove the creeper drive gear (22). Remove oil seal (25) and "O" ring (24) from counterbore in creeper drive gear. Inspect needle bearing (23) in gear housing and remove bearing if not suitable for further service.

For overhaul procedure on remainder of transmission, refer to paragraph 163. Reassemble creeper drive unit, using new parts as required, as outlined in following paragraph 162.

162. If the basic six-speed transmission unit has been disassembled, reassemble as outlined in paragraph 164, then proceed as follows to reassemble creeper drive unit.

Install new "O" ring (24) in counterbore of gear (22), then install new oil seal (25) with lip forward and so that rear side of seal is 1/16-inch below flush with rear face of gear. Install new needle roller bearings using suitable tool that contacts outer edge of bearing cage only; press only against lettered side of bearing cage. Bearing (23) in gear housing should be installed so that sides of cage are recessed an equal distance from front and rear faces of bearing bore in housing. Install bearing (37) in gear (36) so that rear side of bearing cage is ⅜-inch below flush with rear face of gear hub.

On early models 880 and 990, install idler shaft ball bearing (49) in gear housing, then secure with snap ring. Install rear roller bearing outer race in transmission front end plate and press inner race and roller assembly onto rear end of idler shaft. Install idler shaft through roller bearing so that shoulder on shaft contacts inner race of bearing. On all later models, insert bearing adjusting shims that were removed on disassembly in bore of transmission front end plate, then insert bearing cups in front end plate and gear housing and install bearing cone and roller assemblies on idler shaft. Insert idler shaft into gear housing. On all models, install gear (50) on shaft and loosely install washer and nut.

Pack the needle roller bearings and the oil seal cavity in drive gear with grease. Place thrust washer on rear hub of driven gear so that notches in washer will face transmission end plate, then install gear onto transmission driveshaft. Slide driveshaft forward enough to install snap ring (35), then push shaft back into position. Note: If transmission was not disassembled, driveshaft end play should be checked at this time as outlined in paragraph 164.

Install drive gear (22) and retaining plate (21), making sure that any washers located between plate and gear housing on disassembly are reinstalled. Place sliding coupling on rear end of drive gear, then install shift fork, detent spring and ball and the shift rail. Hold detent ball down with screwdriver while pushing shift rail into place.

Install gear housing assembly to transmission front end plate and tighten spacer bar nuts to a torque of 70 Ft.-Lbs. Block transmission gears from turning and tighten idler shaft nut to a torque of 150 Ft.-Lbs. Insert bronze thrust washer between drive gear (22) and end plate (21) and check clearance with feeler gage. Minimum allowable clearance is 0.015. On later models with tapered roller idler shaft bearings, check end play of idler shaft. If end play is not within limits of 0.001-0.003, add or remove shims between rear bearing cup and spacer (44) as required; shims are available in thicknesses of 0.002, 0.003, 0.007 and 0.010.

163. **SIX-SPEED TRANSMISSION UNIT.** On 12-speed models, refer to paragraph 161 and remove the creeper drive unit from transmission front end plate (42—Fig. 108). Then, on both six-speed and 12-speed models, proceed as follows:

Block the transmission gears from turning and remove bevel pinion shaft nut (45—Fig. 109). Mark the differential bearing caps (24) so they can be reinstalled in same position, then remove the caps and differential assembly. Refer to paragraph 171 for overhaul of the differential unit.

Remove cap screws retaining pinion shaft bearing housing (46—Fig. 108 or 41—Fig. 109) and thread ⅜-inch UNC bolts into the tapped holes in housing. Evenly tighten the two bolts to pull bearing housing from front end plate while tapping front end of bevel pinion shaft with soft faced hammer to prevent shaft from being withdrawn with housing. Be sure to retain the shims located between bearing housing and front end plate for reassembly and temporarily replace front bearing cone, washer and nut on pinion shaft.

Remove the four spacer bar nuts (six-speed models) or remaining spacer bar nut (12-speed) and pry low/-reverse gear (31) on pinion shaft into engagement with reverse idler (10). Using soft faced hammer, tap front end plate forward allowing 2nd/3rd gear shift rail (11—Fig. 104) to move forward with front end plate, but do not allow the low/reverse shift rail (12) to move. Remove the integral idler shaft and gears (32—Fig. 109) as front end plate is moved forward. When front end plate is free from the low/reverse shift rail, it can be withdrawn from the 2nd/3rd gear shift rail, leaving the driveshaft and gears, pinion shaft assembly and the shift rails with the transmission rear plate. On six-speed models, retain any shims (3) located in driveshaft bearing bore in front plate; shims are located in transmission rear plate on 12-speed models. Tap front plate on wood block to remove the interlock pin, detent balls and detent springs. On 12-speed models, inspect the needle roller bearings (39 & 40—Fig. 108) in end plate (42); remove bearings if not suitable for further service.

Remove the pinion shaft (23—Fig. 109), complete with gears and bearings; withdraw the shift rails from rear plate along with the shaft and gear assembly. Remove nut, washer, front bearing (43) cone, shims (38) and spacer (37) from pinion shaft, then press shaft from rear bearing (36) cone and gears (33 & 31). Note: On 12-speed models, a spacer washer is fitted behind bearing (36) cone on pinion shaft. Remove snap ring (30) and press shaft from inner race and roller assembly of bearing (28) if renewal of bearing is indicated. To remove bearing (28) outer race, first remove the retaining bolt and special washers, then remove race out front side of plate (14).

To remove driveshaft (2 or 2A), tap rear end of shaft with soft faced hammer. On 12-speed models, retain any shims located in bore of rear end plate (14) for bearing (13); shims for six speed models are located in front end plate. Press drive shaft forward out of the reverse idler bushing (8), gear (10) and bearing (13). Note that washer (12) is located on bushing by a dowel pin (11). Press shaft rearward out of front bearing (4) inner race and roller assembly, remove snap ring (5) and slide gear (6) from front end of shaft.

1. Live PTO cardan shaft
2. Transmission driveshaft
2A. Driveshaft, single clutch
3. Shims
4. Roller bearing
5. Snap ring
6. Range gear
7. Snap ring
8. Idler carrier bushing
9. Upper spacer bars
10. Reverse idler & bushing
11. Dowel pin
12. Thrust washer
13. Roller bearing
14. Rear end plate
15. Stepped dowel
16. Cap screws
17. Spacer bushings
18. Spacer bar nuts
19. Special washers
20. Coupling bolt
21. PTO coupling
22. Bearing retainer bolt
23. Bevel pinion shaft
24. Differential bearing caps
25. Bearing cap nuts
26. Tab washers
27. Bearing cap stud bolts
28. Roller bearing
29. Roller bearing (early)
29. Taper roller bearing (late)
30. Snap ring
31. Low/reverse gear
32. Idler shaft & gears
33. 2nd/3rd gear
34. Spacer bars, lower
35. Roller bearing (early)
35. Taper roller bearing (late)
36. Taper roller bearing
37. Spacer
38. Shims
39. Front end plate
40. Shims
41. Bearing housing
42. Cap screws
43. Taper roller bearing
44. Flat washer
45. Self-locking nut

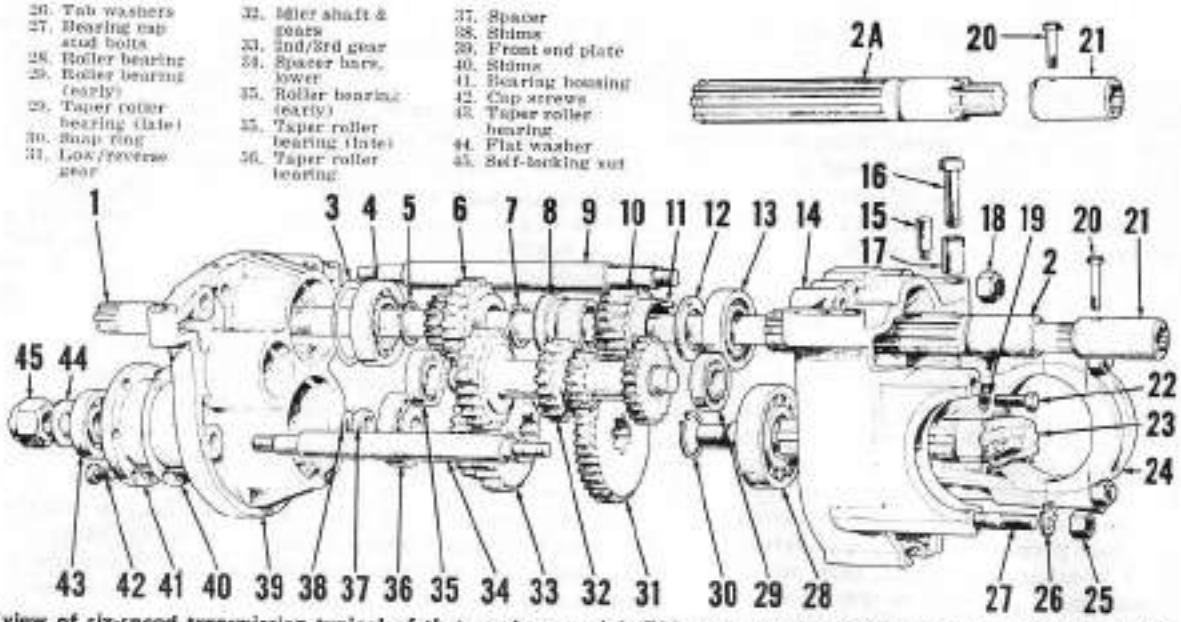


**Fig. 109 — Exploded view of six-speed transmission typical of that used on models 780, 880, 3800 and 4600. On models 880 and 990 with single clutch, a solid driveshaft (2A) is used instead of hollow shaft (2) used with live PTO models. The six-speed transmission unit for 12-speed models is similar except for front end plate (39), driveshaft front bearing and shaft, pinion bearing housing (41) and other minor details. Refer to Fig. 108 for exploded view of components used on 12-speed models only.**

Carefully clean and inspect all parts and renew any not suitable for further service. On early 880 Implematic and 990 Implematic models, idler shaft bearings (29 and 35) were straight roller type, whereas on later 880 and 990 and all other models, tapered roller type bearings are used. With either type bearing, adjustment shims are located between front bearing (35) and front end plate; retain any shims found when removing outer race of front bearing for reassembly. Reassemble transmission as outlined in following paragraph 164.

164. If spacer bars have been removed from rear plate, thoroughly clean threads of lower bars (34) and in end plate apply Locquic primer, allow primer to dry, apply Loctite to threads and firmly tighten bars in rear end plate. Tighten nuts on rear of upper bars to a torque of 70 Ft.-Lbs.

Install pinion shaft rear bearing (28) outer race in bore of rear end plate (14). Install retaining bolt (22) with special washer (19) from rear of plate, then install second special washer and nut at front side of plate; tighten nut to a torque of 9 Ft.-Lbs. Clamp the pinion shaft (23) in a soft jawed vise, install spacer washer (12 speed only) and the cone and roller of rear tapered bearing (36). Place spacer (37) and shims (38) on shaft against bearing cone. Install bearing (36 & 43) cups in housing (46—Fig. 108 or 41—Fig. 109), making sure cups are firmly seated. Place housing on pinion shaft and install front bearing (43) cone and rollers, flat washer (44) and nut (45). Tighten nut to a torque of 200 Ft.-Lbs., then check end play of pinion shaft in bearings. Add or remove shims (38) as necessary to provide end play of 0.002-0.004 when nut (45) is properly torqued. Shims are available in thicknesses of 0.002, 0.003, 0.005 and 0.010. With end play properly adjusted, remove the housing, bearings, spacer and shims and retain with correct number of shims for reassembly. Install rear bearing (28) inner race and rollers, then install snap ring (30). Install low/reverse gear with shift fork groove forward and install the 2nd/3rd gear (33) with groove to rear. Press roller bearing (36) cone firmly against shoulder on shaft, install spacer (37) with shims (38) and temporarily thread nut on shaft. Insert pinion shaft in bearing race in transmission rear end plate.

On 12-speed models, renew bushing (28—Fig. 108) in front end of driveshaft (38) if worn; drive bushing in so that it is recessed 1/16-inch from end of shaft. On both six and 12-speed models, install snap ring (7—Fig. 109) in rear groove of driveshaft, then press reverse idler carrier bushing (8) onto rear end of shaft until seated against snap ring. Renew bushing in the reverse idler (10) if worn. Lubricate both carrier bushing and gear bushing with grease, then install reverse idler gear with chamfered end of teeth forward. Fit washer (12) with dowel pin (11) to rear of carrier bushing, then press ball bearing (13) tightly against washer. Check to see that idler gear turns freely. Install range gear (6) on driveshaft with shift fork groove to rear. On six-speed models, install snap ring (5) and press ball bearing (4) onto front end of shaft tightly against snap ring. On 12-speed models place driveshaft end play adjusting shims in bore of transmission rear plate; then, on all models, position drive shaft assembly in transmission rear plate.

On both six and 12-speed models, place idler shaft adjusting shims in bore of transmission front end plate and insert bearing outer races or bearing cups in bores of both end plates. Press bearing inner race and roller assemblies on each end of idler shaft until firmly seated.

On 12-speed models, check to see that spacer (44— Fig. 108) is firmly retained in bore of front end plate by set screw (41). On six-speed models, place driveshaft adjusting shims (3—Fig. 109) in bore of front end plate. Then, on all models, position front end plate on the spacer bars and slide plate rearward while holding idler shaft in position and guiding six-speed driveshaft bearing into end plate. On 12-speed models, place spacers that are about 1⅝ inches long on the three long spacer bars, then install and tighten the four spacer bar nuts on all models.

Position transmission assembly on tractor frame, loosen spacer bar front nuts, install transmission end plate retaining cap screws **without** spacer bushings and firmly tighten the cap screws. Rap spacer bars with hammer to be sure they are aligned, then retighten nuts to a torque of 70 Ft.-Lbs. Check end play of idler shaft and

driveshaft. Idler shaft end play in bearings should be 0.010 to 0.015 on early models 880 and 990 with straight roller bearings, or 0.002-0.004 on all other models with tapered roller bearings. On models with six-speed transmission, driveshaft end play should be 0.006-0.010. To check end play of driveshaft on 12-speed models, place connector (29—Fig. 106) on front end of driveshaft and push connector against snap ring (35) while measuring clearance between thrust washer on creeper driven gear (36) and face of gear or face of transmission end plate with a feeler gage. Clearance should be 0.015. Add or remove shims between bearing outer races and transmission end plates as required to obtain proper idler shaft and driveshaft bearing adjustment, then move transmission assembly to work bench.

On 12-speed models, place spacer washer on pinion shaft. Then, on both six and 12-speed models, install rear bearing (36—Fig. 109) cone and roller assembly, spacer (37) and previously selected shims (38) on pinion shaft. Install bearing housing with same shim (40) thickness removed on disassembly and tighten retaining cap screws to a torque of 30 Ft.-Lbs. Install front bearing (43) cone and roller assembly, flat washer (44) and nut (45). Lock transmission by engaging two gears at once, then tighten nut to a torque of 200 Ft.-Lbs.

Refer to paragraph 170 and reinstall differential assembly, adjusting differential carrier bearings, bevel gear backlash and pinion mesh position before proceeding further. With differential installed and adjustments made, refer to Figs. 104 and 106 and install the shift forks and rails as follows:

Remove range shift fork (13—Fig. 104) from rail (15). Insert spring (20) and detent plunger (19) in detent bore at left side (facing forward) of driveshaft in front plate, hold plunger down with screwdriver and insert shift rail through bore. Engage shift fork with range gear on driveshaft, slide shift rail through fork and secure fork to rail with new pin. Remove low/reverse shift fork (10) from rail (12), insert a detent spring (17) and ball (16) in bore at right side of driveshaft, then insert rail while holding detent ball down with screwdriver. Engage shift fork with rear gear on pinion shaft, then slide rail through fork and secure with new pin. With low/reverse shift rail in neutral position, insert interlock pin (18) in bore at right side of front end plate and push it in against shift rail. Then, install 2nd/3rd shift fork and rail with detent ball and spring as outlined for other shift forks and rails.

On 12-speed models, refer to paragraph 162 and install the creeper drive unit. Reinstall transmission.

## Model 1200 Six and 12-Speed

165. With transmission removed, proceed as follows:

Mark the differential bearing caps (22—Fig. 110) so they can be reinstalled in same position, then unbolt and remove the caps and the differential assembly. Refer to paragraph 171 for overhaul of the differential and bevel ring gear assembly.

Lock the transmission by engaging two gears at once, then unscrew (left-hand threads) pinion shaft nut (44). Remove tapered roller bearing cone (43), spacers (40) and the bearing adjusting shims (41) from front end of bevel pinion shaft. Turn transmission bottom side up and withdraw bevel pinion shaft (25) from rear end of transmission, leaving gears (32 & 34) suspended on shift forks inside transmission.

Remove the four spacer bolt nuts from front end of transmission and withdraw the two upper bolts (19) from rear. Remove snap ring (13) at rear end of driveshaft (6), then bump rear end plate (23) from transmission while tapping driveshaft forward out of ball bearing (12). Remove spacer housing (24) from transmission; it will be necessary to turn housing as it is removed from front end plate (34—Fig. 111 or 38—Fig. 110) and gears. Setting transmission in vertical position with front end down will aid in removing spacer housing.

The pinion shaft gears, idler shaft, driveshaft assembly, shift rails and forks can now be removed from transmission front end plate. To remove driveshaft rear bearing (12), remove the retaining bolt (16) and washer (11), then push bearing forward out of rear end plate. Pinion rear bearing cup retainer (29), mesh adjusting shims (28) and bearing cup can now be removed from rear end plate. Remove pinion front bearing cup (42) and spacer (39) from front side of front end plate. Idler shaft front bearing (35) cup and adjusting shims (36) can be removed from front end plate and rear bearing (26) cup from rear end plate.

On 12-speed models, refer to Fig. 111 and proceed as follows: Remove pin (26), push creeper drive shift rail (25) from front end plate (34) and remove shift fork (28), detent ball (24), spring (23) and interlock pin (27). Lift creeper driven gear (29) from front end plate. Remove snap ring (39) from front end of creeper drive gear (46), then remove gear, bearing (45) and spacers (43 & 44) from rear side of front end plate. Remove snap ring (40) and push bearing (41) from end plate. Remove spring pin (38) and drive idler shaft (35) forward, removing plug (not shown) from bore with shaft. Lift idler gears (33) with thrust washers from front end plate. Needle roller bearings (37) are pressed into bore of idler gear on early models. On later models, needle bearings are retained by a thrust washer and snap ring at outer side of each bearing and a spacer sleeve is installed between the bearing races. The latest gear assembly can be installed when necessary to renew early type gear with plain bore. When assembled, spacer sleeve end play between bearing cages should be 0.020-0.050. Press on lettered side of bearing cage only when installing new bearing and pack bearings with grease.

Carefully clean and inspect all parts and renew any not suitable for further service. Bushing (2—Fig. 110) in front end of driveshaft (6) and bushing (8) in reverse idler gear (9) are renewable if shaft and/or gear are otherwise suitable for further service. Reassemble transmission as follows:

166. To reassemble transmission, first refer to paragraph 168 and adjust pinion mesh position, then proceed as follows:

Install idler shaft front bearing (35) cup in front end plate without shims and install rear bearing (26) cup in rear end plate. Assemble the end plates to spacer housing with only the idler shaft and bearings in place and tighten spacer bolt nuts to a torque of 80 Ft.-Lbs. Insert pinion shaft through the end plates, then install spacers (40) with shims (41) as removed on disassembly, bearing cone (43), flat washer (45) and nut (44). Tighten pinion shaft nut to a torque of 200 Ft.-Lbs. Note: Temporarily install differential assembly to hold pinion shaft from turning while tightening nut. Check pinion shaft end play and, if necessary, add or remove shims (41) between the spacers (40) to obtain end play of 0.001-0.002. Check idler shaft end play and record end play for shim selection on reassembly. Remove bevel pinion shaft nut, front bearing cone, spacers and shims and retain for reassembly. Withdraw pinion shaft and disassemble the end plates, spacer housing and idler shaft.

To provide proper idler shaft end play, remove front bearing cup from front end plate and install shims of thickness equal to measured end play

1. PTO cardan shaft
2. Bushing
3. Snap ring
4. Snap ring
5. Roller bearing
6. Driveshaft
7. Range gear
8. Bushing
9. Reverse idler gear
10. Thrust washer
11. Special washer
12. Ball bearing
13. Snap ring
14. Cap screws
15. Spacer bushings
16. Bearing retainer bolt
17. Coupling bolt
18. PTO shaft coupling
19. Upper spacer bolts
20. Bearing cap screws
21. Tab washers
22. Differential bearing caps
23. Rear end plate
24. Spacer housing
25. Bevel pinion shaft
26. Tapered roller bearing
27. Tapered roller bearing
28. Shims
29. Bearing retainer plate
30. Cap screws
31. Lower spacer bolts
32. Low/reverse gear
33. Idler shaft & gears
34. 2nd/3rd gear
35. Tapered roller bearing
36. Shims
37. Snap ring
38. Front end plate
39. Spacer
40. Spacers
41. Shims
42. Bearing cup
43. Bearing cone & roller assy.
44. Self-locking nut
45. Flat washer

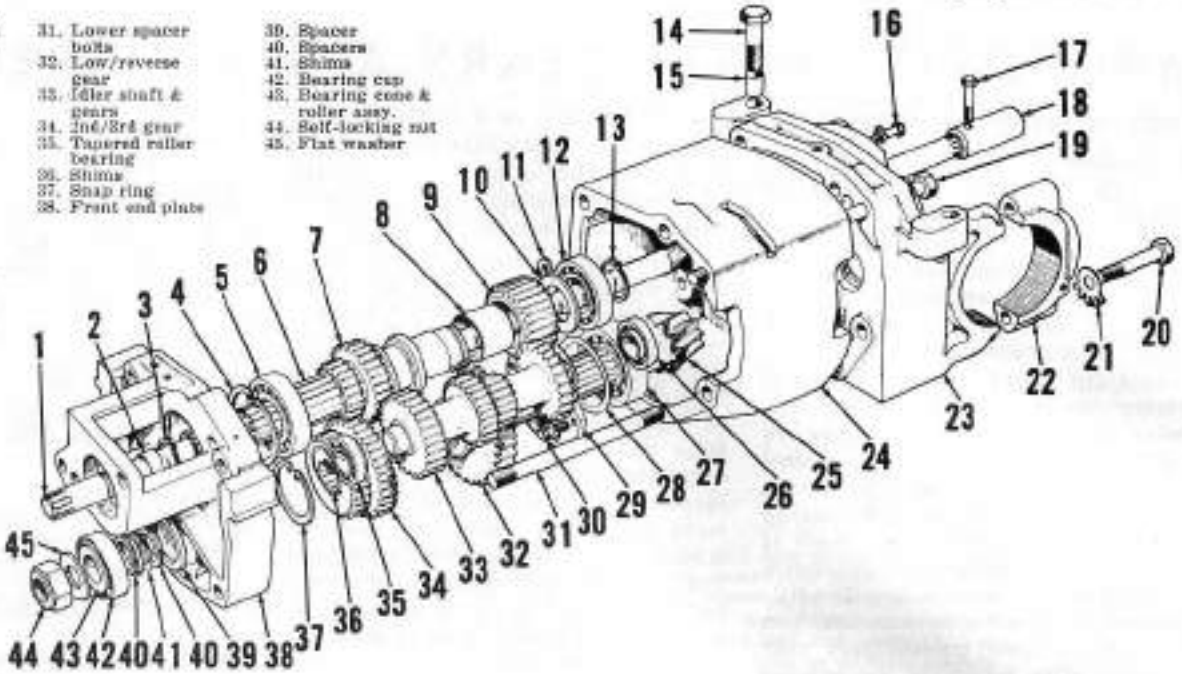

**Fig. 110 — Exploded view of model 1200 six-speed transmission. Refer also to cut-away view in Fig. 112 showing driveshaft and pinion shaft assemblies. On 12-speed models, construction is similar except for creeper drive components and special front end plate shown in Fig. 111. Refer to Fig. 105 for exploded view of six-speed transmission shift rails, forks and shift lever assemblies.**

less 0.002-0.004 shim thickness, then reinstall bearing cup. Then, reassemble transmission by reversing disassembly procedure. Tighten spacer bolt nuts to a torque of 70 Ft.-Lbs. and pinion shaft nut to a torque of 200 Ft.-Lbs. Reinstall differential assembly and adjust bevel gear backlash and carrier bearings as outlined in paragraph 170.

37. Needle bearings (2)
38. Thrust washers (2)
39. Snap ring
40. Snap ring
41. Ball bearing
42. Inner spacer
44. Outer spacer
45. Ball bearing
46. Creeper drive gear
47. Sealing ring
48. Transmission driveshaft
23. Detent spring
24. Detent ball
25. Creeper shift rail
26. Pin
27. Interlock pin
28. Shift fork
29. Creeper driven gear
30. Snap ring
31. Roller bearing
32. Snap ring
33. Idler gear
34. Front end plate
35. Idler shaft
36. Spring pin

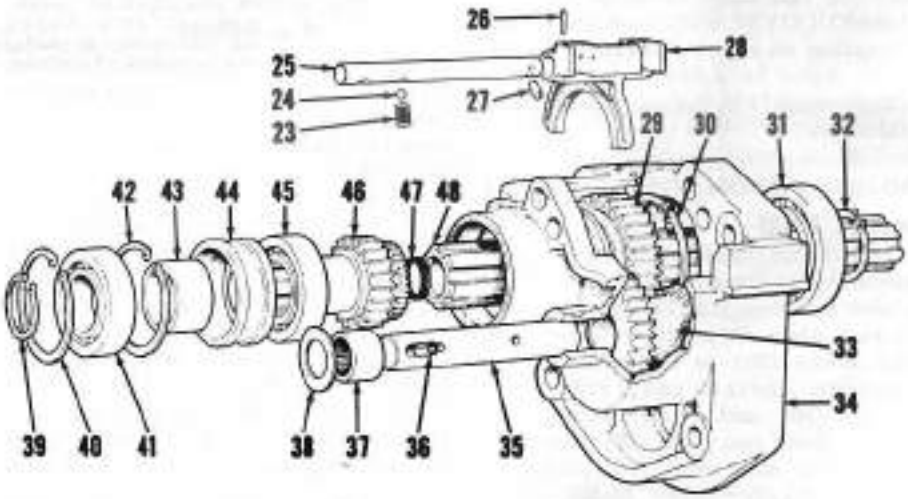

**Fig. 111 — Exploded view of creeper drive unit for model 1200 12-speed transmission. Rear six-speed unit of 12-speed transmission is similar to six-speed transmission shown in Fig. 110. Late creeper idler shaft bearings (37) are separated by a spacer sleeve and are retained in idler gear (33) by steel washers and snap rings.**

**Fig. 112—Cut-away view of model 1200 six-speed transmission showing driveshaft and bevel pinion shaft installation. Marking (M) on rear end of pinion shaft and measured distance (D) concern pinion mesh adjustment; refer to paragraph 168.**

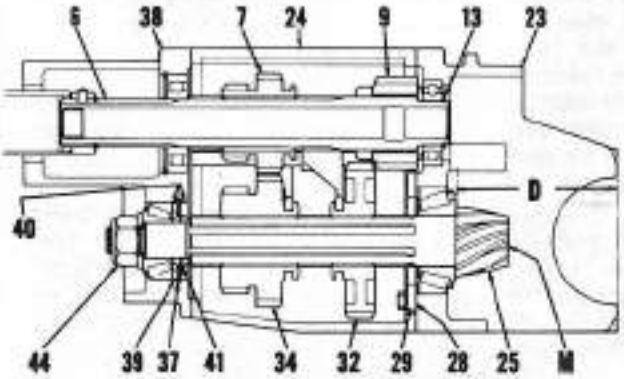

6. Driveshaft
7. Range gear
9. Reverse idler gear
13. Snap ring
23. Rear end plate
24. Spacer housing
25. Bevel pinion shaft
38. Shims
39. Bearing retainer plate
32. Low/reverse gear
34. 2nd/3rd gear
37. Snap ring
38. Front end plate
39. Spacer
40. Spacers
41. Shims
44. Self-locking nut

# MAIN DRIVE BEVEL GEARS AND DIFFERENTIAL

## R&R DIFFERENTIAL ASSEMBLY

### All Models

167. To gain access for removal of differential and to adjust bevel gear mesh, backlash and differential carrier bearings when reinstalling the differential, first remove the transmission as outlined in paragraph 156 or 157, then proceed as follows:

Carefully mark each differential bearing cap so the cap can be reinstalled in same position. The caps are machined after installation so they are not interchangeable. The transmission rear end plate and bearing cap assembly must be renewed if either cap is broken or otherwise damaged beyond further use. The differential and bevel gear assembly can be removed from transmission rear end plate after removing the bearing caps.

If the bevel ring gear is renewed, the bevel pinion must also be renewed as the ring gear and transmission bevel pinion shaft are available in matched sets only. Refer to TRANSMISSION OVERHAUL section for information on renewal of bevel pinion shaft. Refer to following paragraphs 168 through 170 for differential installation.

## ADJUST PINION MESH POSITION

### Model 1200

168. If transmission has been disassembled, proceed as follows: Install pinion rear bearing (27—Fig. 110) cup in rear plate (23) with retainer (29) and shims (28) as removed on disassembly. Install snap ring (37), spacer (39) and front bearing cup (42) in front end plate (38). Assemble the front and rear end plates to spacer housing (24), install upper spacer bolts and tighten all four spacer bolt nuts to a torque of 70 Ft.-Lbs. Insert bevel pinion shaft, with rear bearing (27) cone and roller assembly, through the end plates. Install front bearing cone (43) **without** spacers (40) or shims (41), then install flat washer (45) and nut (44). Tighten nut only enough to remove all pinion shaft end play and slightly preload pinion shaft bearings. Tap bearing (27) cup forward to be sure cup is fully seated against shims.

Observe etched dimension marking (M—Fig. 112) on rear face of pinion shaft, then add this dimension (if positive number) or subtract number (if minus sign preceeds etched number) to 6.3125. For example, if etched number was −0.010, then 6.3125−0.010 would be 6.3025; or if etched number was +0.005, then 6.3125+0.005 would be 6.3175. This number becomes the adjustment dimension (D) for correct pinion mesh position.

To measure pinion mesh position, place a straightedge diagonally across from one upper differential bearing cap face on rear end plate to opposite lower bearing cap face. Then, carefully measure distance from rear face of pinion bearing cone to straightedge using an inside micrometer. Shim (28) thickness is correct if measured distance (D) is equal to adjustment dimension. If measured distance is less than adjustment dimension, add thickness of shims equal to difference between the two values. Remove shims if measured distance is more than adjustment dimension.

### All Models Except 1200

169. On all models except 1200, pinion mesh position is adjusted to obtain desired tooth contact pattern as illustrated by view "A" in Fig. 113. To check and adjust pinion mesh position, proceed as follows:

With transmission assembled, mount differential assembly on transmission rear end plate and install, but do not securely tighten, bearing cap retaining nuts or cap screws. Thread the ring nuts (1 & 13—Fig. 114) into rear plate to obtain differential end play in bearings of 0.000 to 0.002 and a bevel gear backlash of 0.007-0.009. Paint driven side of ring gear teeth (see Fig. 113) with red lead or prussian blue, then turn differential assembly while applying slight drag to bevel pinion shaft and check resulting contact pattern on the driven side of ring gear teeth.

If contact pattern is as shown in view "A", pinion mesh position is correct. If pattern is as shown in view "B" (heel contact), remove shims from between pinion bearing housing and front end plate of transmission to move pinion shaft rearward. If pattern is as shown in view "C" (peak contact), recheck backlash and if backlash is less than 0.009, remove shims to move pinion shaft closer to ring gear. Pattern shown in view "D" (toe contact) indicates too deep a mesh position; add shims between pinion shaft bearing housing and front end plate to move pinion shaft forward. View "E" (root contact) indicates either insufficient backlash or too deep a mesh position. Check backlash and if more than 0.007, move pinion shaft forward by adding shims between bearing housing and transmission front end plate.

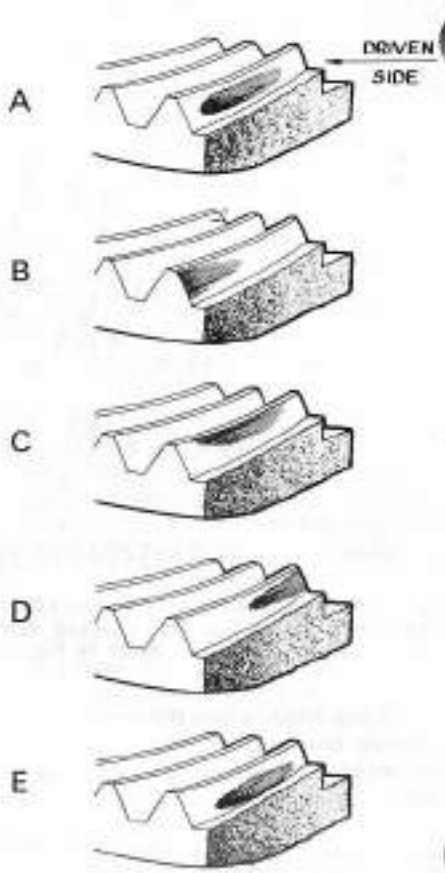


**Fig. 113 — Views showing possible bevel gear tooth contact patterns for guide in adjusting pinion mesh position for all models except model 1200. Tooth contact pattern shown in view "A" indicates correct mesh position; views "B" through "E" show possible patterns indicating readjustment of mesh position. Refer to text.**

Shims may be cut at one of the bolt cut-outs so that shims can be removed or installed between pinion shaft bearing housing and transmission front end plate without removing bearing housing. When satisfactory tooth contact pattern has been achieved with differential end play in bearings of less than 0.002 and bevel gear backlash of 0.007-0.009, tighten differential bearing cap nuts or retaining cap screws to a torque of 120 Ft.-Lbs. and install ring nut retainers (2—Fig. 114). Be sure that pinion shaft bearing housing cap screws are tightened to a torque of 30 Ft.-Lbs.

## ADJUST DIFFERENTIAL CARRIER BEARINGS AND BEVEL GEAR BACKLASH

### All Models

170. On all models except 1200, adjustment of differential carrier bearings to provide proper bevel gear

backlash and bearing adjustment is correlated with pinion mesh position adjustment as outlined in paragraph 169.

On model 1200, install differential assembly on transmission rear end plate and install, but do not securely tighten, the bearing cap retaining cap screws. Turn the ring nuts (1 & 13—Fig. 114) in so that end play of differential in carrier bearings is less than 0.002, but without preloading the bearings. Then, move the assembly sideways as required to obtain bevel gear backlash of 0.007-0.009 by loosening one ring nut and tighten opposite ring nut a like amount. When bevel gear backlash and differential carrier bearings are properly adjusted, install the ring nut locks (2) and tighten differential carrier bearing cap retaining cap screws to a torque of 120 Ft.-Lbs.

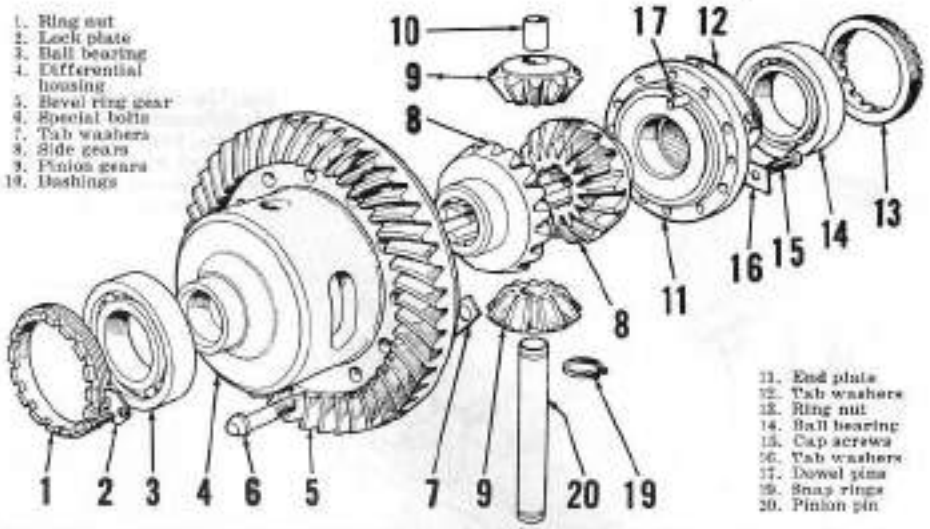


**Fig. 114 — Exploded view of model 1200 and late model 990 differential assembly. Early model 990 and other models do not have renewable pinion gear bushings (10); although late type gears with bushings may be installed in early model 990 differential. Early model 770, 880 and 990 pinion pin (20) was drilled at each end and retained with cotter pins instead of snap rings (19) shown and end plate (11) was retained with six cap screws instead of nine used on all later models.**

## OVERHAUL DIFFERENTIAL ASSEMBLY

### All Models

171. With differential assembly removed as outlined in paragraph 167, refer to exploded view of unit in Fig. 114 and proceed as follows:

Straighten the tab washers and remove the cap screws retaining end plate (11) to differential housing (4). Mark position of end plate on housing, then separate plate from housing and dowel pins (17) and remove side gear (8). Remove snap ring (19) from one end of pinion pin (20), remove pin and extract the pinion gears (9) and remaining side gear (8).

Inspect the carrier bearings (3 & 14) and if rough or excessively worn, remove bearings from housing using split adapter that will contact bearing inner race only.

If bevel ring gear is worn or damaged, straighten the tab washers and remove retaining nuts and bolts, then remove gear from differential housing. Refer to appropriate transmission overhaul paragraph and remove the bevel pinion shaft; ring gear and pinion are available in a matched set only and one new gear should never be installed without also installing mating gear.

On model 1200 and later model 990, check the bushings (10) in the pinion gears (9) and renew bushings if worn or scored. The later pinion gears with bushings can be used to renew early model 990 gears without bushings.

To reassemble differential, proceed as follows: Using transmission lubricant or good grade of light grease, lubricate all parts prior to reassembly. Place a side gear (8) and the two pinion gears (9) in housing, then install pinion pin (20) and secure with snap rings (19) or cotter pins. Note: Late type pinion pin and snap rings can be used to renew drilled pinion pin on early models 770, 880 and 990. Install remaining side gear, then install end plate as follows:

Thoroughly clean threads in housing and end plate retaining cap screw threads, apply Locquic primer, then treat cap screw threads with Loctite. Early end plate for models 770, 880 and 990 was retained by six cap screws. On all later models, nine cap screws are used and, as the dowel pin and bolt holes are nearly the same size, one of the dowel pin holes is identified by a small indentation adjacent to hole. Position the end plate on the dowel pins, then install the cap screws with tab washers. Note that the tab washers with two bolt holes must be installed so as to cover the dowel pins. Tighten cap screws to a torque of 30 Ft.-Lbs.

Carefully clean faces of differential housing and ring gear, then install ring gear with bolt heads to gear teeth side of assembly. Install tab washers and nuts, tighten nuts to a torque of 50 Ft.-Lbs. by diagonal selection and bend tab washers against the nuts.

Install differential carrier bearings with side marked "THRUST" on outer race away from differential (toward ring nuts).

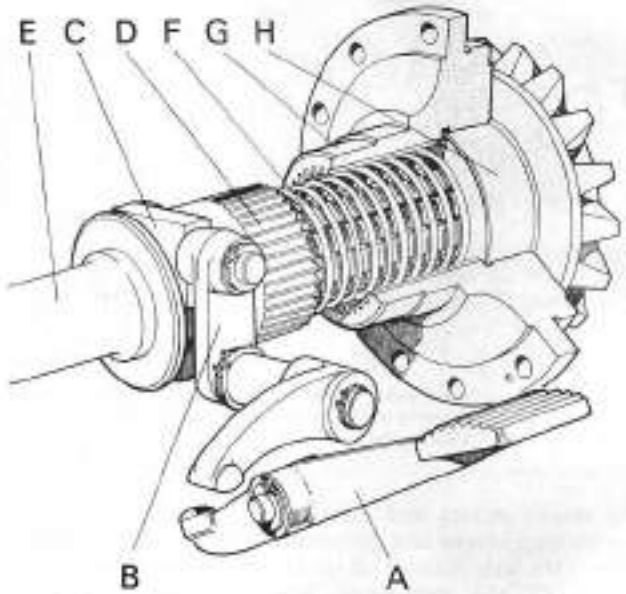


**Fig. 115 — View showing differential lock operation. When sleeve (D) external splines are engaged with internal splines in differential side gear (H), differential is locked as solid unit.**

A. Foot pedal
B. Shaft arm
C. Fork
D. Locking sleeve
E. Final drive shaft
F. Return spring
G. End plate
H. Side gear

## DIFFERENTIAL LOCK

### All Models

172. When differential lock foot pedal (A—Fig. 115) is depressed, locking sleeve (D) is pushed against differential end plate (G). When splines on sleeve and in end plate are aligned,

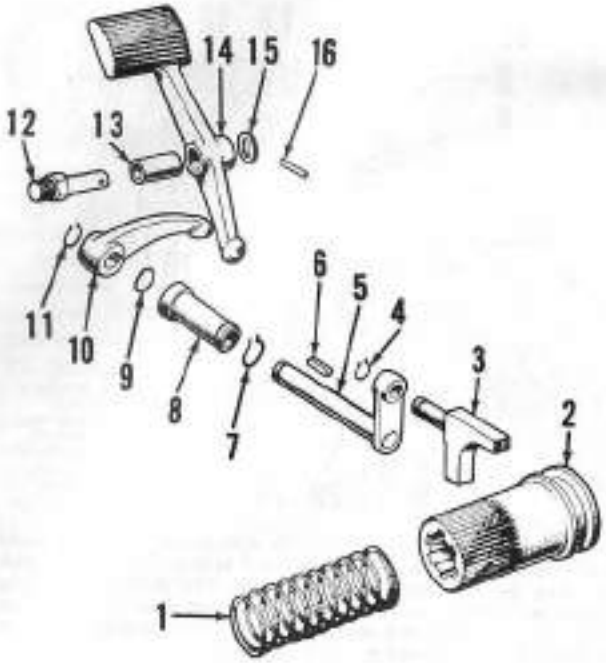


**Fig. 116 — Exploded view of differential lock components. Pedal may be retained on pivot pin (12) with snap ring instead of spring pin (16).**

1. Return spring
2. Locking sleeve
3. Fork
4. Snap ring
5. Shaft & arm
6. Key
7. Snap ring
8. Bushing
9. "O" ring
10. Arm
11. Snap ring
12. Pivot pin
13. Bushing
14. Foot pedal
15. Washer
16. Spring pin

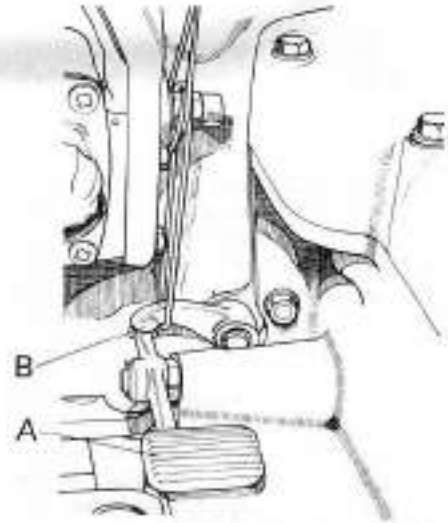


**Fig. 118 — To retain locking sleeve in differential end plate, thus allowing removal or installation of final drive unit, depress pedal (A) to engage differential lock and wire arm (B) in engaged position.**

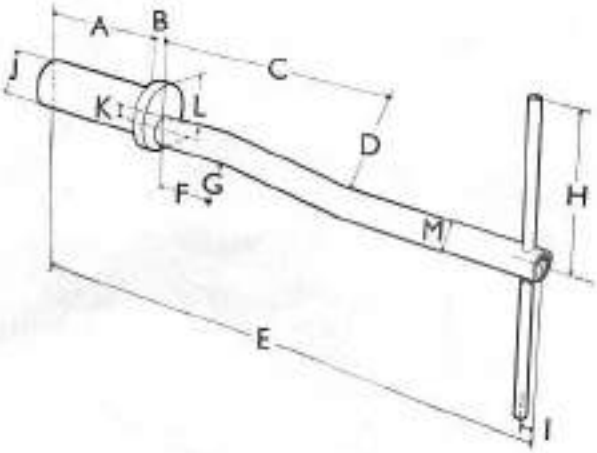


**Fig. 117 — Tool shown can be fabricated locally and used to install differential lock sleeve. Refer to text for tool use procedure; dimensions are as follows:**

A. 4½ inches
B. ½-inch
C. 6⅝ inches
D. 4 inch offset
E. 30½ inches
F. 1½ inches
G. 4 inch offset
H. 9 inches
I. ½-inch
J. 1½ inches
K. ½-inch
L. 2¼ inches
M. 1 inch

the sleeve enters end plate. As both the locking sleeve and differential side gear (H) are splined to final drive shaft (E), the differential is locked up and both final drives must turn at same speed. When pedal is released and traction on both wheels becomes equal, or if clutch is momentarily disengaged, spring (F) returns locking sleeve to disengaged position allowing differential to function normally.

All components of the differential lock can be removed after removing the right final drive unit as outlined in paragraph 174 and the axle housing seal retainer as outlined in paragraph 184. Working through opening in right end of axle housing, remove locking sleeve (2—Fig. 116) and spring (1); it may be necessary to manipulate pedal (14) or arm (10) to disengage fork (3) from groove in locking sleeve. Remove snap ring (11), arm (10) and key (6). Push shaft and arm assembly (5) into axle housing and remove out oil seal retainer opening. Fork (3) can now be removed from arm (5) if necessary. Disengage snap ring (7) and remove bushing (8) from outside of housing. Remove pedal (14) and renew pin (12) and/or pedal bushing (13) if worn. Refer to differential overhaul (paragraph 171) if necessary to renew differential end plate.

Reinstall operating linkage in axle housing, then install locking sleeve and spring as follows: Insert spring in differential end plate. Using tool fabricated to dimensions shown in Fig. 117, place locking sleeve on tool, outer end first, and with offset in tool turned to move groove end of sleeve away from fork, push the sleeve against the spring until sleeve contacts differential end plate. Turn the tool to bring locking sleeve groove into engagement with fork, then depress pedal to push sleeve into differential end plate. While holding pedal in the engaged position, wire arm in engaged position as shown in Fig. 118, then release pedal. The final drive unit can now be reinstalled on axle housing.

# FINAL DRIVE

The final drive assemblies consist of the rear axle, axle (bull) gear, spur (bull) pinion and brake drums and can be removed from the axle housing as a unit.

## LUBRICATION AND BREATHER

### All Models

173. Lubricating oil for the final drive gears is contained in each final drive housing and other than a breather, the final drive unit is sealed. Thus, the breather must be kept open or oil will be forced past the shaft seals. On models 770, 780 and 3800, a breather is fitted in a tapped hole in the final drive cover. On all other models, the top cap screw retaining cover to final drive housing is drilled; this cap screw must be reinstalled in top bolt hole and a solid cap screw must not be substituted for the drilled cap screw.

The lubrication fitting in the outer face of rear axle shaft (or in axle seal housing on models 990 and 1200) is not for bearing lubrication; the lubricant passage leads to the seal cavity and fresh grease is used to force dirt from the axle shaft seal. Thus, grease should appear from seal housing whenever grease is forced through the lubrication fitting. Lack of regular lubrication at fitting will allow

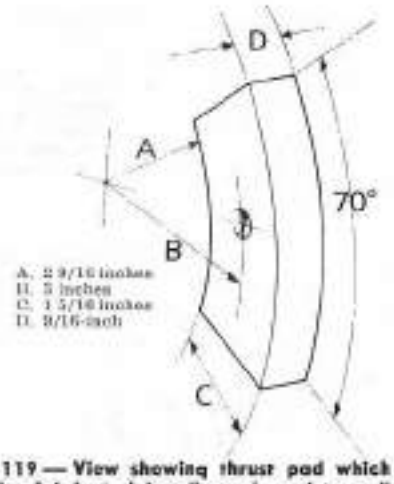


**Fig. 119 — View showing thrust pad which can be fabricated locally and used to pull wheel axle shaft from bearings, spacers and axle gear. Dimensions are indicated in legend.**

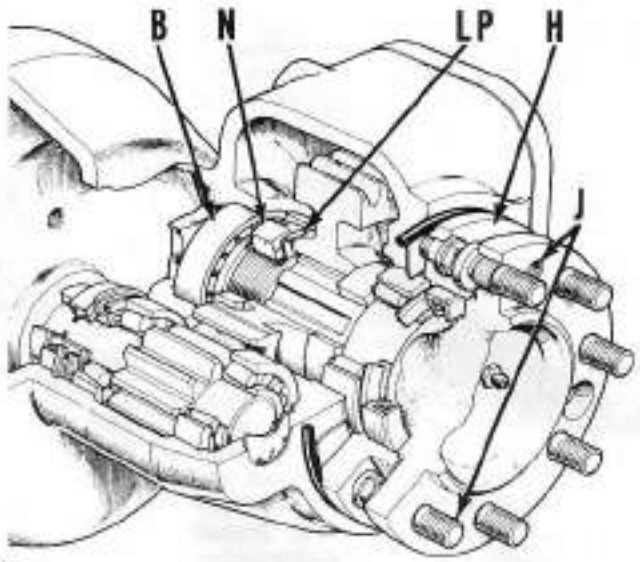


**Fig. 120—Cut-away view of model 770 final drive showing wheel axle shaft and component parts typical of all models.**

B, Inner bearing
H, Oil seal housing
J, Jackscrew holes
N, Ring nut
LP, Locking plate

dirt to damage oil seal resulting in leakage of final drive lubricating oil.

## R&R FINAL DRIVE ASSEMBLIES

### All Models

174. Securely support tractor under rear axle housing and remove rear wheel. Loosen brake adjustment so that brake drum will not drag on brake shoes. On right side, engage the differential lock and wire actuating arm in engaged position as shown in Fig. 118. If final drive unit is to be disassembled, drain lubricant from housing. Attach hoist to final drive housing, unbolt housing from rear axle casting, then withdraw the unit until spur gear shaft clears axle housing.

Before reinstalling final drive assembly, inspect seals in outer end of axle housing and the brake shoes; renew seals as outlined in paragraph 175 if necessary. Refer to paragraph 187 regarding renewal of brake shoes.

To reinstall final drive unit, reverse removal procedure. Tighten final drive to axle housing bolts to a torque of 45 Ft.-Lbs. on model 770, 100 Ft.-Lbs. on model 1200, serial No. 700348 and up, and to a torque of 75 Ft.-Lbs. on all other models. Refill final drive housing to level plug opening with SAE 140 gear lubricant.

## WHEEL AXLE SHAFT, AXLE GEAR, BEARINGS & SEALS

### All Models

175. **REMOVE AXLE, GEAR, BEARINGS AND SEAL HOUSING.** Support tractor under rear axle housing and remove rear wheel. Drain final drive lubricant and remove cover plate. Straighten the tabs on locking plate (LP—Fig. 120) at inner side of axle (bull) gear and using spanner wrench, loosen ring nut (N). Using a ½-inch BSF tap, clean the jackscrew holes (J) in axle shaft flange. Thread jackscrews (David Brown tool No. 900207) into the holes and place thrust pads (refer to Fig. 119) between inner ends of jackscrews and oil seal housing (H—Fig. 120). Note: Oil seal housing must be securely bolted to final drive housing when pulling rear axle; otherwise, housing will be distorted when pressure is applied. While tightening the jackscrews to withdraw axle shaft from gear and bearings, loosen ring nut at inner side of gear as shaft moves outward. With shaft removed, withdraw the axle gear, spacers, locking plate and nut and bearing cones from cover plate opening. Note: On models 780 and 3800, it will be necessary to remove snap ring (30—Fig. 122) and pull ball bearing (31) from bore. Unbolt and remove seal housing and gasket or shims and "O" ring from final drive housing. Remove outer bearing cup, or ball bearing on models 780 and 3800, from bore in outer side of final drive housing.

Carefully clean and inspect all parts and renew any not suitable for further service. Renew axle shaft oil seal and reassemble as outlined in appropriate following paragraph.

176. MODEL 770. Install new oil seal (9—Fig. 121) in housing (11) with lip of seal facing out, lubricate seal with grease, position housing on axle shaft and carefully work lip of seal over shoulder. Place grease baf-

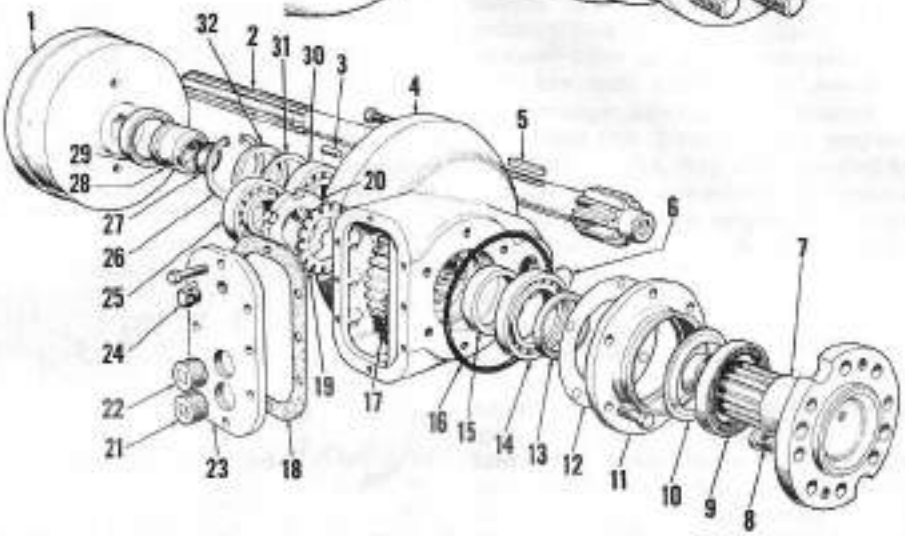


**Fig. 121 — Exploded view of model 770 final drive assembly. Inner bearing (25) is supported in blind bore inside the housing and can be removed after removing axle shaft (7) and gear (17). Refer to Fig. 120 for cut-away view of unit.**

1. Brake drum
2. Spur (bull) pinion
3. Dowel pins
4. Final drive housing
5. Brake drum key
6. Expansion plug
7. Axle shaft
8. Wheel bolts
9. Oil seal
10. Grease baffle
11. Oil seal housing
12. Shims
13. Spacer
14. Taper roller bearing
15. Spacer
16. "O" ring
17. Bullgear
18. Gasket
19. Locking plate
20. Ring nut
21. Drain plug
22. Oil level plug
23. Cover plate
24. Breather
25. Taper roller bearing
26. Snap ring
27. "O" ring
28. Spacer
29. Oil seal
30. Taper roller bearing
31. Shims
32. Spacer

fle (10) over shaft with lip towards seal, fit baffle in recess in housing and slide spacer (13) over shaft. Be sure spacer is through lip of baffle and seated against shaft shoulder, then place bearing (14) cup over shaft and seat cup in housing recess against baffle. Press bearing (14) cone onto shaft tightly against spacer (13), then install spacer (15) on shaft against bearing cone. Thoroughly clean splines in gear and on axle shaft, apply Locquic primer to axle shaft splines, then coat shaft splines with Loctite. Install bearing (25) cup in final drive housing and stick cone and roller in cup with heavy grease. Position axle gear in housing, insert axle shaft assembly without shims and install locking plate (19) and nut (20). Install three equally spaced oil seal housing retaining cap screws to hold housing in place, then tighten ring nut (20) to securely clamp gear, spacers and bearing on axle shaft and bend tabs of locking plate (19) against ring nut. Tighten the three cap screws equally so as to remove all shaft end play (bump end of axle shaft with soft faced hammer to be sure inner bearing cone is seated) but not tight enough to distort housing. Measure gap between oil seal housing and final drive housing, then remove the cap screws and install shims of total thickness 0.005 less than measured gap. Split in shims should be in horizontal position. Install oil seal housing cap screws and tighten to a torque of 50 Ft.-Lbs. Install "O" ring (16) in groove around inner edge of oil seal housing. Pump grease into axle shaft fitting until grease appears between oil seal housing and axle shaft flange. Reinstall cover (23) with new gasket, tighten cap screws to a torque of 20 Ft.-Lbs. and fill housing to oil level plug with SAE 140 gear lubricant.

177. MODELS 780 AND 3800. Install ball bearing (31—Fig. 122) in final drive housing and secure with snap ring (30). Install new oil seal (19) in housing (17) with lip of seal facing out, lubricate seal with grease and place housing over axle shaft, carefully working lip of seal over shoulder. Install spacer (15) and grease baffle (20) on shaft, then install ball bearing (21) by pressing against inner race only so that bearing inner race tightly clamps grease baffle and spacer against shoulder on shaft. Install spacer (22) against bearing inner race. Thoroughly clean splines in gear and on axle shaft, apply Locquic primer to shaft splines, then coat shaft splines with Loctite. Place new gasket (18) on oil seal housing, position axle gear in final drive housing and insert axle shaft through gear. Install locking plate (27) and ring nut (29) and install oil seal housing cap screws (16). Tighten the ring nut to clamp gear, spacers and bearing tightly on axle shaft, then bend tabs of locking plate to secure nut. Tighten oil seal housing cap screws securely and pump grease into axle shaft fitting until grease appears between oil seal housing and axle shaft flange. Install cover with new gasket, tighten retaining cap screws to a torque of 20 Ft.-Lbs. and fill to level plug with SAE 140 gear lubricant.

178. MODELS 880 AND 4600. Installation procedure for axle shaft as-

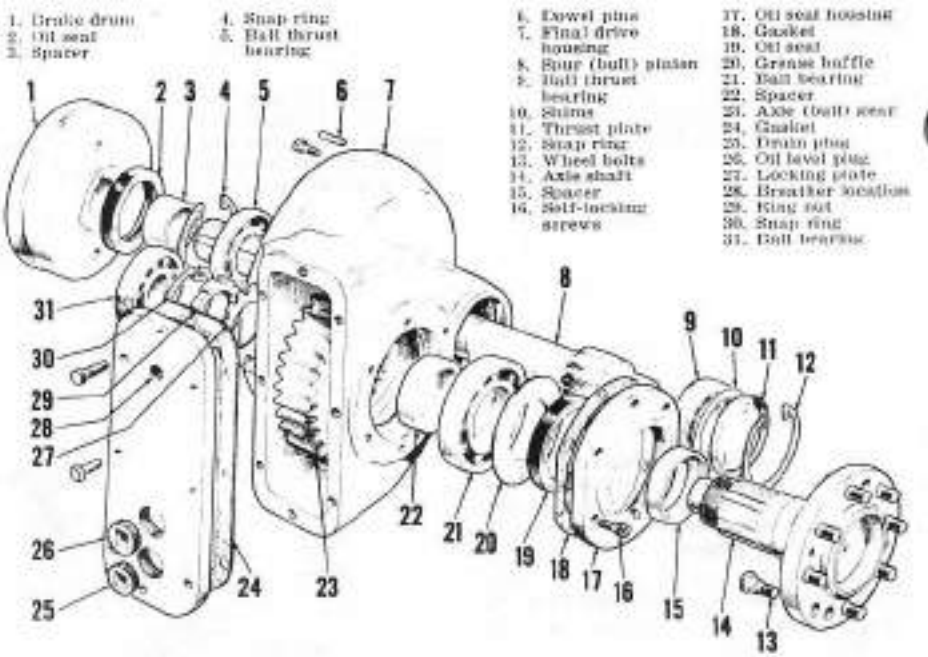


**Fig. 122 — Exploded view of final drive assembly for models 780 and 3800. Bearings for both pinion and axle shafts are ball bearing type whereas all other models are equipped with taper roller bearings. Adjust thrust type pinion bearings for 0.001-0.003 shaft end play by varying shims (10). No adjustment is provided for axle shaft bearings.**

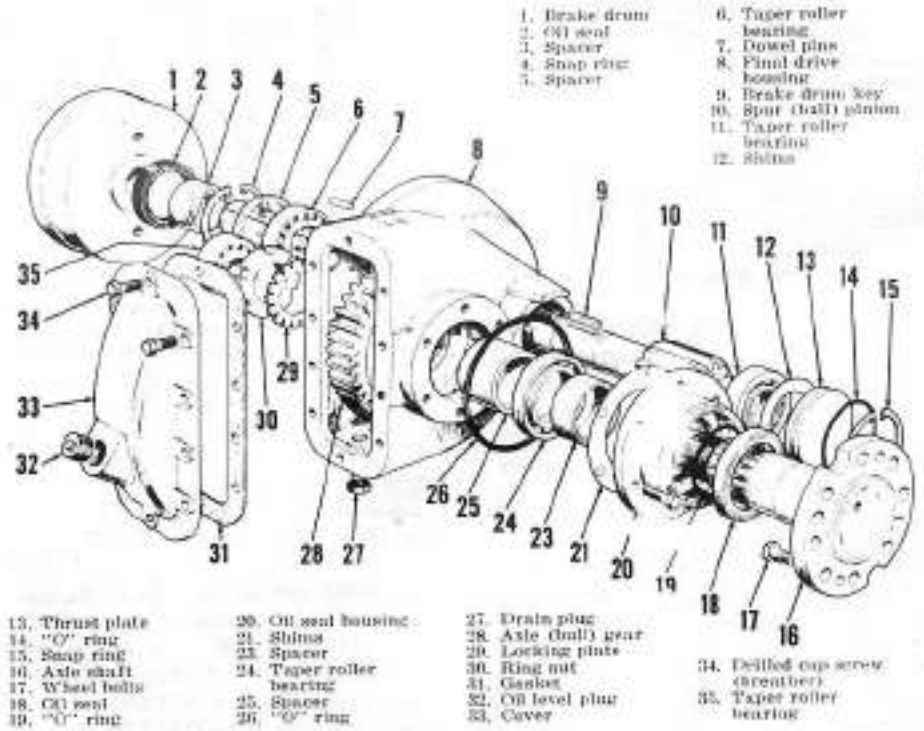


**Fig. 123 — Exploded view of final drive assembly for models 880 and 4600. On these models, an "O" ring (19) is fitted in bore of oil seal housing (20) to prevent oil seal cleaning grease from entering final drive housing; all other models use a grease baffle at this location.**

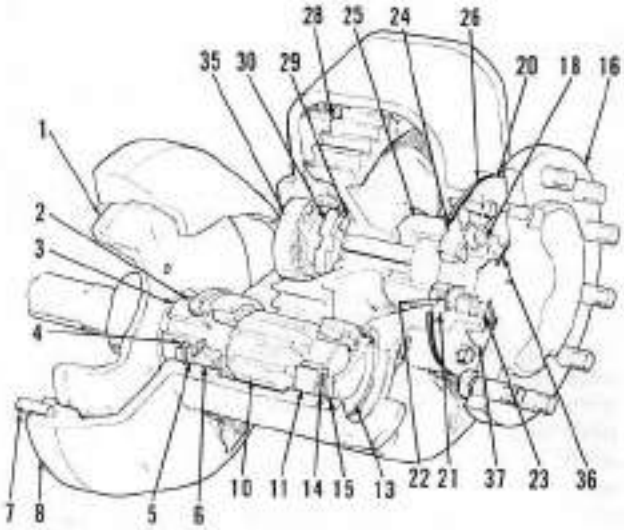


**Fig. 124—Cut-away view of later model 990 final drive assembly identifiable by eight wheel hub bolts. On early model 990 with six wheel hub bolts, final drive construction is similar to that shown for model 770 in Fig. 121. Pinion shaft bearing adjusting shims are located between thrust plate (13) and outer bearing (11) cup.**

1. Brake drum
2. Oil seal
3. Spacer
4. Snap ring
5. Spacer
6. Taper roller bearing
7. Dowel pins
8. Final drive housing
10. Spur (bull) pinion
11. Taper roller bearing
13. Thrust plate
14. "O" ring
15. Snap ring
16. Axle shaft
18. Oil seal
20. Oil seal housing
21. Shims
22. Grease baffle
23. Spacer
24. Taper roller bearing
25. Spacer
26. "O" ring
28. Axle (bull) gear
29. Locking plate
30. Ring nut
35. Taper roller bearing
36. "O" ring
37. Oil seal cover

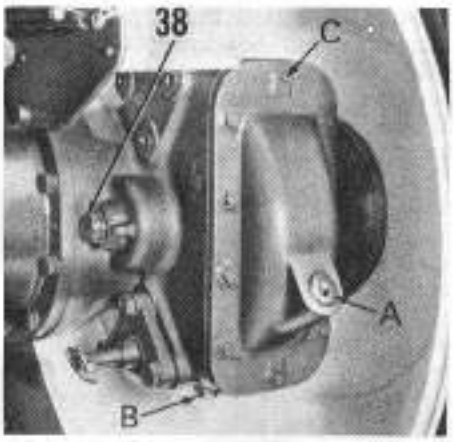


**Fig. 126 — View showing location of model 1200 axle bearing adjusting screw at inner side of final drive housing**

A. Oil level plug
B. Drain plug
C. Breather cap screw
38. Adjusting screw

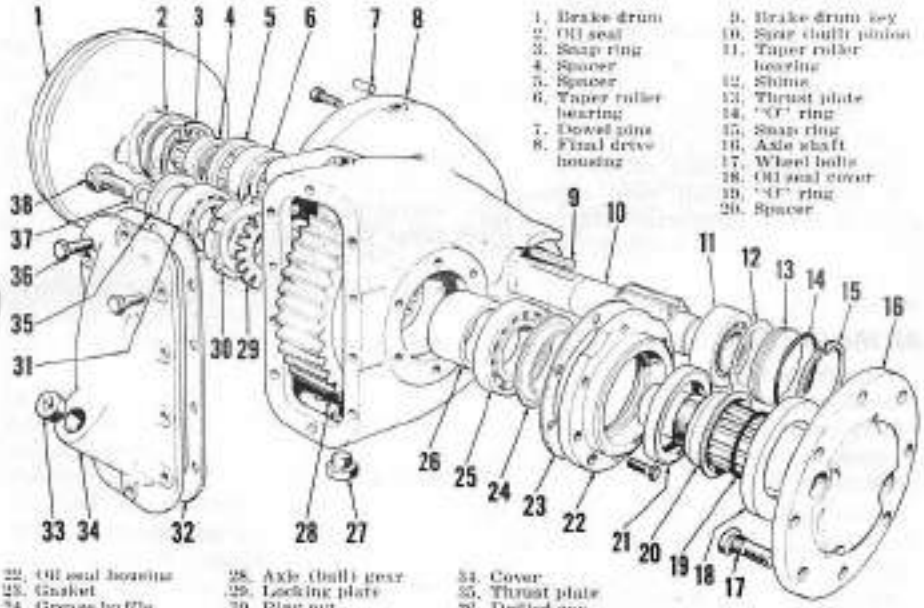


1. Brake drum
2. Oil seal
3. Snap ring
4. Spacer
5. Spacer
6. Taper roller bearing
7. Dowel pins
8. Final drive housing
9. Brake drum key
10. Spur (bull) pinion
11. Taper roller bearing
12. Shims
13. Thrust plate
14. "O" ring
15. Snap ring
16. Axle shaft
17. Wheel bolts
18. Oil seal cover
19. "O" ring
20. Spacer
22. Oil seal housing
23. Gasket
24. Grease baffle
25. Taper roller bearing
26. Spacer
27. Drain plug
28. Axle (bull) gear
29. Locking plate
30. Ring nut
31. Taper roller bearing
32. Gasket
33. Oil level plug
34. Cover
35. Thrust plate
36. Drilled cap screw (breather)
37. Shims
38. Cap screw

**Fig. 125 — Exploded view of model 1200 final drive assembly. Axle shaft bearings are adjusted by varying shims under cap screw (38) head; refer also to Fig. 126. Thrust plate (35) and taper roller bearing (31) are located in blind bore (except for tapped hole for cap screw) and can be removed after removing axle (16) and axle gear. Remove cap screw (38) and tap thrust plate and bearing cup out with punch.**

sembly is basically same as outlined for model 770 in paragraph 176, except that final drive cover plate cap screws are tightened to a torque of 30 Ft.-Lbs., and an "O" ring (19—Fig. 123) is used instead of the grease baffle (10—Fig. 121). Install "O" ring in groove inside oil seal housing (20—Fig. 123) before placing oil seal housing on axle shaft. Make sure drilled breather cap screw is in upper cover bolt hole.

179. MODEL 990 WITH SIX WHEEL HUB BOLTS. On model 990 having six wheel hub bolts, procedure for installing rear axle assembly is similar to that outlined in paragraph 176 for model 770; but with following exceptions: Oil seal grease fitting is located in oil seal housing instead of in axle shaft; install oil seal housing with grease fitting at 7 o'clock position. Also, tighten cover retaining cap screws to a torque of 30 Ft.-Lbs., making sure that drilled breather bolt is in upper bolt hole.

180. MODEL 990 WITH EIGHT HUB BOLTS. Refer to Fig. 124 for cross-sectional view showing later model 990 final drive which can be identified by axle flange having eight wheel bolts.

To assemble, install oil seal (18) in housing (20) with lip **facing out**. Lubricate seal with grease, then insert spacer (23) with ridge at outer side of seal lip. Place seal cover (37) over outer end of seal housing and stake rim of cover down into groove in seal housing at several places. Fit a new "O" ring (36) on axle shaft, then slide seal housing, seal and spacer onto axle shaft against the "O" ring. Install grease baffle (22) with lip towards oil seal, then place bearing cup against grease baffle and press bearing cone and roller assembly onto shaft so that spacer (23) is tightly clamped between bearing cone and shoulder of axle shaft.

Remainder of assembly is as outlined for model 770 in paragraph 176, except that final drive housing cover cap screws are tightened to a torque of 30 Ft.-Lbs. and grease fitting is located in oil seal housing instead of axle shaft. Position oil seal housing with grease fitting at 7 O'clock position and make sure drilled breather bolt is installed at top cover retaining bolt hole.

181. MODEL 1200. Procedure for installing new oil seal and assembly of axle shaft, oil seal housing, spacers and bearings is same as outlined in paragraph 180 for model 990 equipped with eight bolt wheel hub. With seal housing, bearing and spacers installed on axle shaft, proceed as follows:

Refer to Fig. 126, cut locking wire and back adjusting screw (38) out.

If removed, install thrust plate (35—Fig. 125) and bearing (31) cup in final drive housing and stick bearing cone in cup using heavy grease. Thoroughly clean splines in gear and on axle shaft, apply Locquic primer to shaft splines, then coat shaft splines with Loctite. Position axle gear in housing, place new gasket (23) on axle shaft and insert end of axle shaft in gear. Install locking plate (29), ring nut (30) and the oil seal housing retaining cap screws. Note: Position oil seal housing with grease fitting at 7 O'clock position. Tighten ring nut to securely clamp axle gear, spacers and bearing on axle shaft, then bend tabs of locking plate to retain nut. Tighten oil seal housing cap screws to a torque of 50 Ft.-Lbs. Remove bearing adjusting screw (38) and bump outer end of axle shaft with soft faced hammer to be sure inner bearing cone is seated, then reinstall adjusting screw **without** shims (37). Tighten adjusting screw so that end play of axle shaft is removed, but bearings are not preloaded, then measure gap between adjusting screw head and final drive housing (see Fig. 126). Remove the adjusting screw and install shims of thickness equal to measured gap less 0.006 shim thickness. Firmly tighten the adjusting screw and secure with wire to hole in final drive housing web. Pump grease into fitting in oil seal housing until grease appears between oil seal housing and axle flange. Reinstall final drive cover with new gasket, making sure drilled breather bolt is installed in upper bolt hole, and tighten all cap screws to a torque of 30 Ft.-Lbs. Refill to oil level plug with SAE 140 gear lubricant.

## SPUR PINION SHAFT, BEARINGS AND SEAL

### Model 770

182. To remove the spur (bull) pinion shaft, first remove final drive assembly as outlined in paragraph 174, remove axle shaft and gear as in paragraph 175, then proceed as follows:

Using tapped puller holes provided, remove brake drum from pinion shaft and withdraw key (5—Fig. 121) from keyway in pinion shaft. Remove spacer collar (28) using prying groove provided on collar, then pry oil seal (29) from final drive case. Remove snap ring (27) and extract the spacer (32) and shims (31). Drill or punch a hole through expansion plug (6) at outer side of housing, then pry plug from housing. Insert a ¾-inch soft drift punch through plug opening and drive pinion shaft and inner bearing (30) assembly from final drive housing. Outer bearing (not shown) cone will be removed with pinion shaft. Remove outer bearing cup from housing using suitable bearing cup remover.

To reassemble, drive new outer bearing cup into bore in housing and drive the bearing cones onto pinion shaft until they are firmly seated. Install inner bearing cup, then install retaining snap ring **without** shims (31), but with spacer (32). Push spacer inward, then measure gap between spacer and snap ring. Remove snap ring and spacer, then reinstall with total shim thickness 0.003 greater than measured gap. Recheck pinion shaft to be sure all end play is removed and that bearings are slightly preloaded. Install new oil seal (29) with lip towards inside of final drive housing and lubricate seal. Fit a new "O" ring (27) in groove of collar (28) and slide collar into place on shaft. Place brake drum key in position and slide brake drum onto shaft. Support outer end of pinion shaft with a piece of ⅞-inch diameter bar inserted through plug opening in housing and using a piece of pipe, drive brake drum tightly against collar. Remove the bar and install new expansion plug. Refer to paragraph 176 and reinstall axle shaft assembly, then reinstall final drive assembly as in paragraph 174.

### All Models Except 770

183. With final drive assembly removed as outlined in paragraph 174, remove axle shaft and gear as outlined in paragraph 175, then proceed as follows:

Using tapped holes provided in brake drum, pull drum from pinion shaft and extract brake drum key from keyway in shaft. Remove snap ring at outer side of final drive housing, then bump inner end of pinion shaft to drive the shaft, outer bearing, shims and thrust plate from housing. Using a long punch, bump oil seal from inner side of final drive housing, then drive inner bearing cup to inside of housing. A spacer (except on models 780 and 3800) is located between snap ring and inner bearing cup.

Reassemble final drive as follows: On models 780 and 3800, install inner bearing outer race with side marked "THRUST" against snap ring in final drive housing. On other models, install inner bearing spacer against snap ring, then install bearing cup against spacer. Install inner bearing race and ball assemblies (models 780 and 3800) or bearing cone and roller assemblies (all other models) tightly against

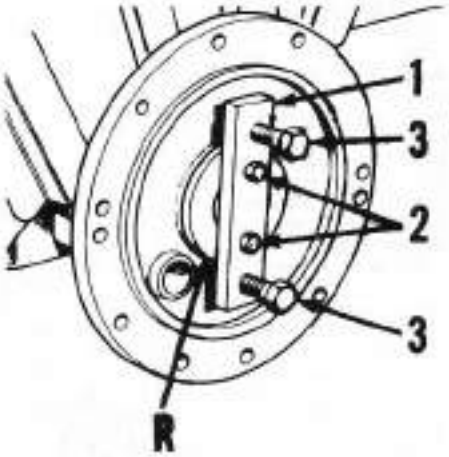


Fig. 127 — Puller (1) for oil seal retainer (R) can be fabricated locally from flat bar. Tap holes for jackscrews (3); attach puller to oil seal retainer with cap screws (2).

shoulders on shaft. Insert pinion shaft in final drive housing, then install outer bearing race with side marked "THRUST" out on models 780 and 3800, or install outer bearing cup on other models. Install outer bearing thrust plate and retaining snap ring without shims or "O" ring. Push thrust plate in to remove all end play from pinion shaft in bearings, measure the gap between thrust plate and snap ring and record measurement for reassembly. Drive new oil seal into final drive housing with lip of seal toward pinion gear. Clean the shaft and inside of spacer that is to be fitted between inner bearing and brake drum, coat shaft with Loctite and slide spacer onto shaft, through the seal and against inner bearing. Remove snap ring and thrust plate at outer end of pinion shaft. Support outer end of pinion shaft, insert brake drum key in keyway of pinion shaft, then using section of pipe, drive brake drum onto pinion shaft until it is seated firmly against spacer.

On models 780 and 3800, select total adjustment shim thickness of 0.002 less than measured gap, then install shims, thrust plate and snap ring. Note: Coat rim of thrust plate with gasket sealer before installing in final drive housing. Check end play of pinion shaft which should be 0.001-0.003.

On other models, select total adjustment shim clearance of 0.003 greater than measured gap to give desired bearing preload, then install the shims, thrust plate with "O" ring and retaining snap ring.

Reinstall axle shaft and gear assembly as outlined in paragraph 177, 178, 179, 180 or 181. Reinstall final drive assembly as outlined in paragraph 174.

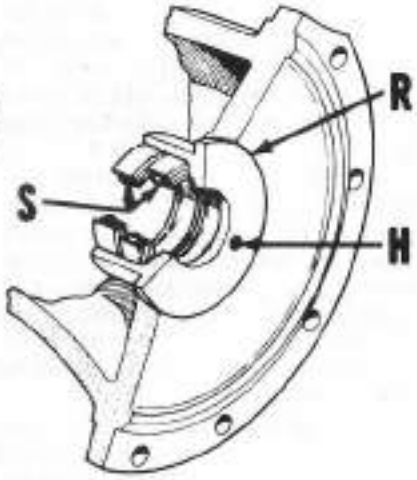


Fig. 128 — Cut-away view showing axle housing oil seal retainer (R) and seals (S). Retainer has tapped holes (H) for removal as shown in Fig. 127.

### REAR AXLE HOUSING

**All Models**

184. **OIL SEALS.** Final drive pinion shaft oil seals at each end of axle housing can be renewed after removing final drive assemblies as outlined in paragraph 174. Refer to Fig. 127 for view showing tool which can be fabricated locally to pull seal retainers (R—Fig. 128). Drive old seals (S) from retainer, then install both new seals with lips towards inner end of retainer. Pack cavity between the seals with grease, apply gasket sealer to outside of retainer, then drive retainer and seal assembly into end of axle housing. Reinstall final drive assemblies as outlined in paragraph 174.

185. **RENEW AXLE HOUSING.** To remove axle housing, proceed as follows: Remove PTO housing and gear assembly as outlined in paragraph 192. Remove drawbar, hitch brackets and fenders. Refer to appropriate Implematic (for early 880 and 990 models) or Selectamatic (all other models) hydraulic system of this manual for information on removal of all hydraulic components attached to or within axle housing. Remove both final drive assemblies as outlined in paragraph 174. The axle housing can then be unbolted and removed from tractor rear main frame and the transmission cover.

Install new housing by reversing removal procedure and observing the following: Tighten axle housing to rear main frame and transmission cover bolts to a torque of 45 Ft.-Lbs. on models 770, 780 and 3800; to a torque of 55 Ft.-Lbs. on models 880, 990 and 4600; and to a torque of 75 Ft.-Lbs. on model 1200.

# BRAKES

### ADJUSTMENT

**All Models**

186. If brake pedals are not aligned when released, align right pedal (29—Fig. 129) with left pedal by loosening lock nut and turning adjustment screw (31) as required, then tighten lock nut. Check to see that pedal lock plate (28) can be engaged.

To adjust brakes, proceed as follows: Jack tractor up until both rear wheels are free to turn. With hand lever (30—Fig. 130 or 131) in released position and both pedals released, loosen lock nut (18) and turn the adjusting nut (19) on one brake rod only until brake starts to bind when turning wheel on that side, then loosen nut until wheel turns freely and tighten lock nut. Apply hand lever to a latched position so that the wheel on the side already adjusted can just be turned, then loosen lock nut on opposite brake rod and turn adjusting nut on that rod so that same effort is required to turn both rear wheels. Tighten lock nut, release hand lever and road-test brakes for satisfactory operation. Adjusting the brake rods provides adjustment for both foot pedals and hand lever.

### R&R BRAKE SHOES

**All Models**

187. The brake shoes can be removed after removing final drive assemblies as outlined in paragraph 174. Brake shoes and linings are available separately or as an assembly. Upper and lower shoes and linings are interchangeable.

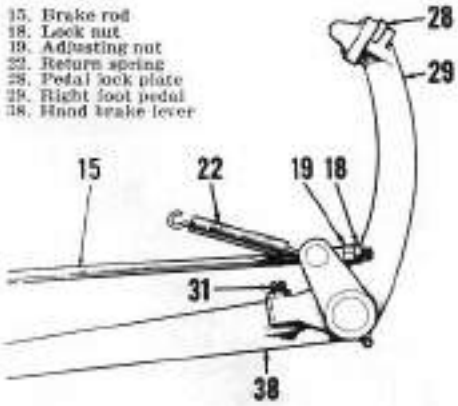


Fig. 129 — Brake rods (15) are adjusted by loosening lock nut (18) and turning adjusting nut (19); refer to text. Adjusting screw (31) is to maintain pedal alignment so that pedals are equal height in released position.

### R&R OR RENEW BRAKE DRUMS

**All Models**

188. Brake drums can be removed from final drive pinion shaft after removing final drive assemblies as outlined in paragraph 174. Thread adapters for leg type pullers into tapped holes in drum, then pull drum from shaft and remove key from keyway in pinion shaft.

To install brake drums, outer end of final drive pinion shaft must be supported while driving drum onto pinion shaft. On model 770, remove expansion plug from final drive housing at outer end of pinion shaft and support shaft with piece of ⅞-inch diameter bar inserted through expansion plug opening. Position key in pinion shaft keyway, then using a length of pipe placed over inner end of pin-

Fig. 130 — Exploded view of model 1200 brake system. Faulty gasket (25) or "O" ring (40) will allows leakage of transmission lubricant. Nuts retaining compensating spring (11) on rear end of brake rod (15) are not shown; if disassembled, secure the assembly with castellated nut and cotter pin, then tighten hex nut so that all end play of spring is removed plus ½-turn and lock with jam nut.

1. Brake drum
2. Brake shoes
3. Camshaft
4. Bushings
5. Dust seals
6. Shoe return spring
7. Anchor bolt
8. Brake arm
9. Taper bolt
10. Spring retainer
11. Compensating spring
12. Spring retainer
13. Thrust block
14. Pin
15. Brake rod
16. Snap ring
17. Pin
19. Adjusting nut
20. Lever
21. Pin
22. Return spring
23. Cross-shaft
24. Tube
25. Gaskets (2)
26. End plates (2)
27. Left foot pedal
28. Pedal lock plate
29. Right foot pedal
30. Hand lever
31. Adjusting screw
32. Pawl spring
33. Pawl
34. Pin
35. Fork
36. Pin
37. Pin
38. Hand brake lever
39. Pin
40. "O" ring

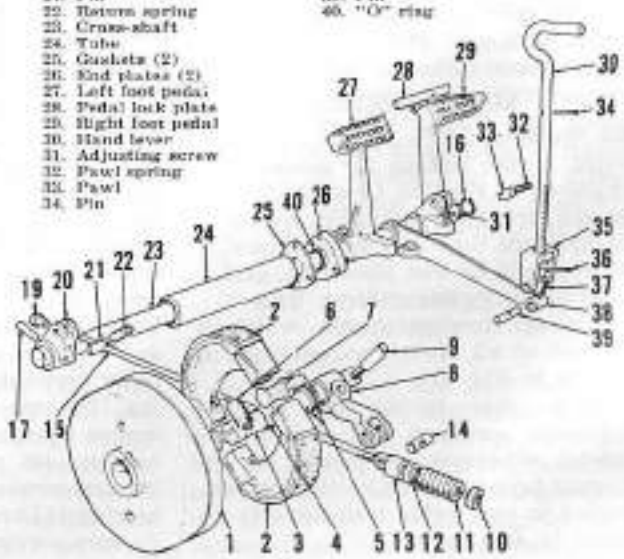

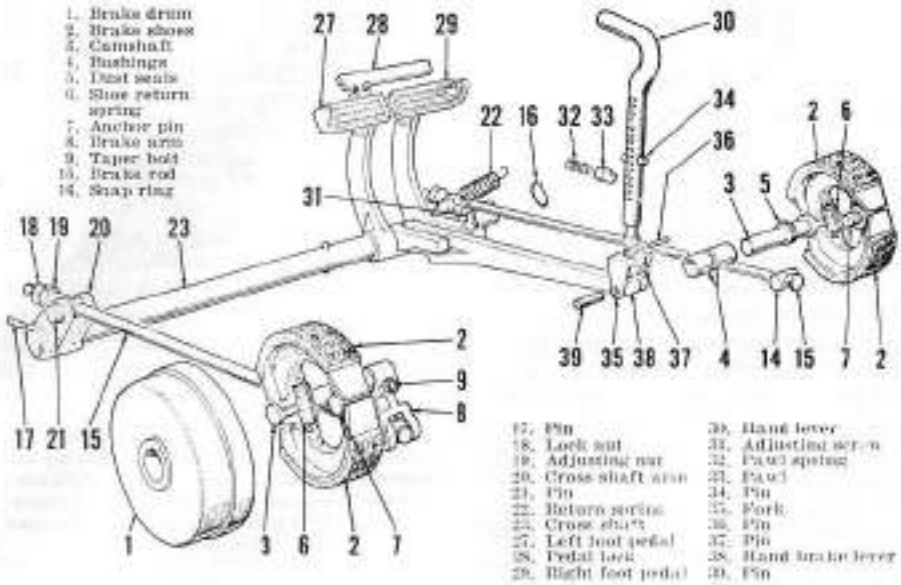


**Fig. 131 — Exploded view of model 990 brake system; other models, except 1200, are similar. On models 770, 780 and 3800, brake rods (15) are turned with adjusting nut (19) end to rear.**

ion shaft, drive the brake drum onto shaft until firmly seated against oil seal spacer collar. Then, remove bar and install new expansion plug in final drive housing.

On all models except 770, remove the snap ring, thrust plate and bearing adjustment shims from final drive housing at outer end of pinion shaft; take care not to lose any of the shims. Being careful that pinion shaft is not pushed outward far enough to foul inner bearing ball or roller retainer against axle (bull) gear, support outer end of shaft while driving brake drum onto pinion shaft with a length of pipe. Be sure that keyway in drum and key in pinion shaft are aligned before starting to drive drum onto shaft. Reinstall all of the bearing adjustment shims removed. On all models except 780 and 3800, install new "O" ring on thrust plate; on models 780 and 3800, coat outer rim of thrust plate with gasket sealer. Then, install thrust plate and snap ring.

### BRAKE LINKAGE

#### All Models

189. Brake linkage for model 1200 is shown in Fig. 130. Cross-shaft (23) passes through transmission compartment inside tube (24) which is sealed at each end by end plate (26), gasket (25) and "O" ring (40).

Linkage for model 990, which is typical of all models except 1200, is shown in Fig. 131.

Brake shoe anchor bolt (7) and actuating camshaft (3) can be renewed whenever removing or renewing brake shoes. Camshaft is supported in renewable bushings (4) located in axle housing.

## BELT PULLEY

A belt pulley attachment that mounts on PTO housing and is driven from PTO shaft is available for all models except model 1200. Refer to Fig. 132 for exploded view of unit for model 770 and to Fig. 133 for models 780, 880, 990, 3800 and 4600 belt pulley assembly. Venting of the unit shown in Fig. 133 is accomplished by a hole drilled through the expansion plug (20) in input gear (19); thus, oil leakage will occur if unit is stored with mounting end down. Refer to following appropriate paragraph for overhaul of belt pulley unit.

### OVERHAUL

#### Model 770

190. Remove cover (1—Fig. 132) and unbolt and remove pulley from shaft (3). Remove plug (10) and drain lubricant. Unbolt and remove bracket (20) along with pulley guard and bracket (9). Remove cover (19), taking care not to lose or damage shims (18). Straighten tabs of washer (8) and unscrew the two hex nuts from pulley shaft (3). Withdraw pulley shaft from housing and remove gear (6) and inner bearing cone and roller from cover opening. Remove input gear (14) and shaft (16) assembly. Pry pulley shaft seal (4) from housing and remove outer bearing cone and roller assembly. Inspect the two bearing (5) cups and remove if worn or scored. Drive input gear seal (11) and bearing (13) cup into inside of housing and remove seal and cup. Inspect bearing (17) cup in cover and remove if worn or scored. Remove bearing cone and roller assemblies from input gear and shaft if bearings are worn or scored and, if necessary to renew gears, straighten tabs of plates (16) and unbolt shaft (15) from gear (14).

Gear mesh position is controlled by selection of the tapered roller bearing (5 & 13) to be within specified tolerances; therefore, if necessary to renew the large input gear bearing or the pulley shaft bearings, obtain these parts through David Brown parts department to be sure of maintaining correct gear mesh position.

Install pulley shaft bearing cups and outer bearing cone, then install seal (4) with lip to inside of housing. Install seal (11) with lip to inside of housing, then install input gear bearing (13) cup. If input gear and shaft are disassembled, bolt gear to shaft using lock plates (16) and cap screws, securely tighten cap screws and bend tabs of plates against cap screw heads. Install bearing cones on input gear and shaft and install bearing cup in cover. Carefully work input gear through oil seal (11) and push into place, then install pulley shaft through seal (4) and bearings, installing inner bearing cone and gear (6) as shaft is pushed into place. Install the two hex nuts with tab washer (8) between them, tighten nut next to gear so that all shaft end play is removed, but not causing a binding condition, then tighten second nut and secure by bending tabs of washer against flats on nuts. Install cover with shim thickness necessary to remove all end play from input gear and shaft, but without causing bearings to bind. Reinstall pulley, guard and brackets. Fill gearbox to level of plug (10) with SAE 80 transmission/hydraulic oil.

#### All Models Except 770

191. To renew pulley shaft oil seal (5—Fig. 133) only, remove cover (1), unscrew pulley nut (2) and remove pulley. Unbolt and remove retainer (6) taking care not to lose or damage any shims (8) and install new seal in retainer with lip inward. Lubricate seal with grease, place new gasket (7) on retainer, be sure all shims (8) are present inside housing, then install retainer and tighten cap screws securely. Reinstall pulley and tighten nut to a torque of 100 Ft.-Lbs., then reinstall cover (1).

For complete overhaul of unit, proceed as follows: Remove plugs (16) and drain lubricant. Remove belt pulley, then unbolt and remove output housing (11) and gear assembly from gearbox (15), being careful not to lose or damage any of the shims (12).

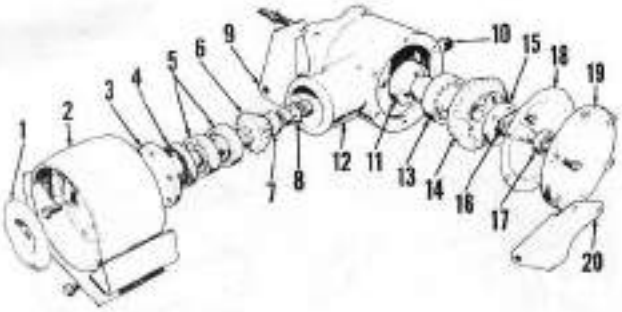


**Fig. 132 — Exploded view of belt pulley assembly for model 770. Gear backlash is maintained by use of special tolerance tapered roller bearings (5 & 13).**

1. Cover
2. Belt pulley
3. Pulley (output) shaft
4. Oil seal
5. Tapered roller bearings
6. Output gear
7. Flat washer
8. Tab washer
9. Belt guard bracket
10. Oil level/drain/filler plug
11. Oil seal
12. Gearbox
13. Tapered roller bearing
14. Input gear
15. Input gear shaft
16. Lock plates
17. Tapered roller bearing
18. Shims
19. Cover
20. Belt guard bracket

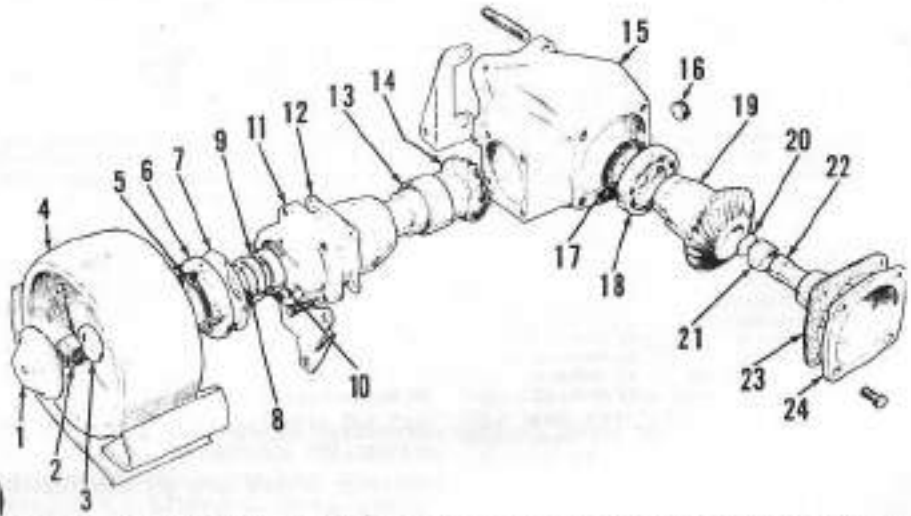


**Fig. 133 — Exploded view of belt pulley assembly for models 780, 880, 990, 3800 and 4600. Gear backlash is adjusted by varying shim (12) thickness and output gear (14) end play is adjusted by varying thickness of shims (8) between roller bearing (9) outer race and retainer (6).**

1. Cover
2. Pulley nut
3. Flat washer
4. Belt pulley
5. Oil seal
6. Retainer
7. Gasket
8. Shim
9. Roller bearing
10. Ball bearing
11. Housing
12. Shims
13. Needle roller bearing
14. Output gear
15. Gearbox
16. Plugs (2)
17. Oil seal
18. Thrust type ball bearing
19. Input gear
20. Expansion plug (w/vent hole)
21. Needle roller bearing
22. Bearing pin
23. Gasket
24. Cover

Unbolt and remove rear cover (24), then drive input gear (19) rearward out of gearbox. Note: Do not insert drift pin through the splined part of gear as driving against expansion plug (20) will damage both plug and needle bearing (21). Drive seal (17) into inside of gearbox and remove seal.

To disassemble output (pulley) housing and gear, remove retainer (6) with shims (8) from outer end of housing and press gear (14) out inner end. Remove the roller bearing (9) and ball bearing (10) from housing. If worn or damaged, remove needle roller bearing (13) from inner end of housing.

Carefully clean and inspect all parts. If needle bearing (21) in output gear is worn or damaged and gear set is usable, remove bearing from gear. Also, check needle bearing journal on pin (22) and remove pin from rear cover (24) if journal shows signs of wear.

To reassemble, coat edge of expansion plug (20) with gasket sealer, then insert plug in gear (19) and expand with drift pin. Using proper size mandrel and pressing against lettered end of bearing cage only, install needle roller bearing (21) in gear; take care that bearing is not pressed in far enough to cover oil hole in gear. Press on lettered end of new bearing (13) to install bearing in housing (11).

If either gear (14 or 19) is worn or damaged beyond further use, both gears must be renewed as they are available in a matched set only.

Lubricate needle bearing (13) with grease. Install ball bearing (10) and roller bearing (9) in housing. Install new seal in retainer (5), then install retainer with new gasket (7) and same shims (8) as removed. Position the housing, bearing and seal assembly on hub of belt pulley, insert output gear (14) in housing and press gear in until seated against ball bearing. Remove the assembly from belt pulley and check shaft end play; shaft should turn smoothly in bearings and have an end play of 0.004-0.006. If end play is not within these limits, remove retainer and add or remove shims (8) as necessary to obtain correct end play.

Install new oil seal (17) in gearbox with lip to inside. Press bearing (18) onto gear so that side of outer bearing race marked "THRUST" will be towards oil seal, then insert input gear into housing, carefully working gear through the seal. Lubricate needle bearing (21) with grease, then install cover (24) and pin (22) assembly with new gasket.

Install output shaft and housing assembly with same shims (12) as removed on disassembly, then check gear backlash. If backlash is not within the limits of 0.005-0.007, remove the output shaft and housing assembly and add or remove shims (12) as necessary to obtain correct backlash.

When output shaft end play and gear backlash are correct, install belt pulley and tighten nut to a torque of 100 Ft.-Lbs. Fill gearbox to level of lower plug with SAE 140 transmission/hydraulic oil.

# PTO

Model 770 is equipped with a single-speed PTO unit whereas all other models are equipped with two-speed PTO assemblies. Refer to Fig. 134 for exploded view of the single-speed PTO for model 770, to Fig. 137 for exploded view of model 1200 PTO assembly and to Fig. 135 for view showing PTO housing and gears for all other models. On all except model 1200, the gear type hydraulic system pump is driven from a gear on PTO unit top shaft via an idler gear supported on front end of PTO output shaft (model 770) or on a stub shaft mounted in PTO housing (other models). On all models, the PTO drive gears and bearings are lubricated by return oil from the hydraulic lift system.

## R&R POWER TAKE-OFF ASSEMBLY

### All Models

192. To remove the PTO housing and gear assembly, first drain transmission lubricant, then proceed as follows: Unbolt and remove drawbar assembly and lower link or sway chain brackets from PTO housing. On Selectamatic models refer to paragraph

261 and remove the hydraulic system top link sensing unit. On models so equipped, remove the hydraulic filter warning lamp sensor from the PTO housing. Attach hoist to PTO housing, then unbolt housing from rear axle, move assembly rearward until splined coupling is disengaged and lift unit from tractor. On models with dual clutch ("Livedrive" models), the PTO cardan (drive) shaft can be withdrawn from tractor at this time.

Prior to reinstalling PTO unit on "Livedrive" models, be sure the PTO cardan shaft is fully engaged with the PTO clutch disc splines and pilot bearing, then on all models, proceed as follows: Thread two guide studs at least 3 inches long at opposite positions in rear axle housing and using grease, stick new gasket to axle housing. Be sure PTO gears are engaged, lift unit into position and turn output shaft to align input shaft coupling splines, then push unit forward into place. If hydraulic pump drive gears are not aligned (all models except 1200), turn engine to align drive gear teeth, then push housing into place. Unscrew the guide studs and install retaining cap screws. Complete remainder of assembly by reversing disassembly procedure and adjust sensing unit cable as outlined in paragraph 203, 204 or 244.

## OUTPUT SHAFT OIL SEAL

### All Models

193. The output shaft oil seal can be renewed without removing PTO assembly from tractor; proceed as follows:

Thoroughly clean PTO housing rear cover and surrounding area and place oil pan under housing. Unbolt and remove rear cover plate and remove old seal and cover plate gasket. Install new seal in cover plate with lip forward and lubricate seal with grease. Install cover plate with new gasket, taking care to work lip of seal over PTO shaft or use a seal protector. Clean threads of four lower cover retaining cap screws, treat with hydraulic grade Loctite and securely install all cap screws. Refill transmission to proper level.

## OVERHAUL PTO ASSEMBLY

### Model 770

194. With unit removed as outlined in paragraph 192, drain any lubricant from housing, refer to exploded view in Fig. 134 and proceed as follows:

Remove snap ring (7) from front end of input shaft, pull pump drive gear (8), then remove gear drive key and second snap ring (9). Unbolt and remove rear cover plate (28). Remove snap ring (25) from rear end of input shaft, bump shaft forward far enough to remove bearing (24), then remove snap ring (23) and withdraw shaft from rear of housing. Inspect needle bearing (10) in front wall of housing and remove bearing if excessively worn or damaged.

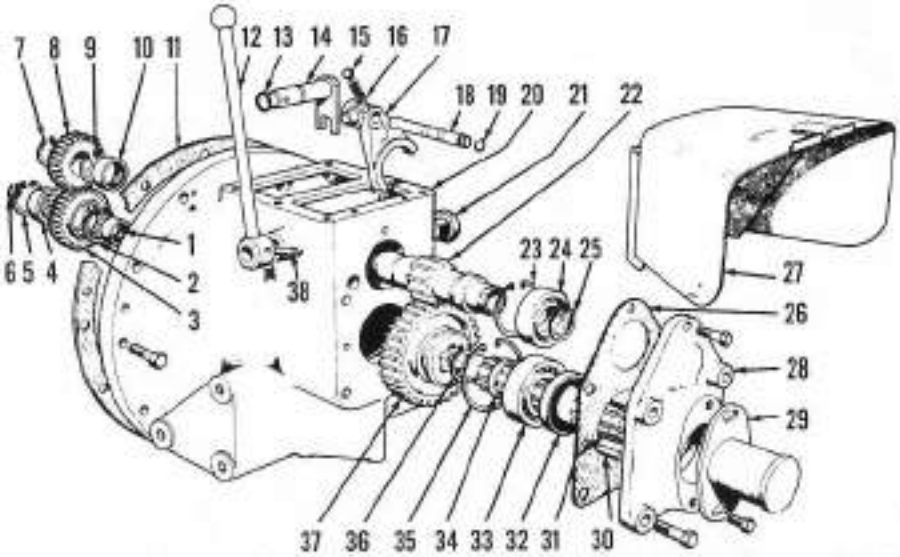


**Fig. 134—Exploded view of model 770 single-speed PTO housing and gear assembly. Hydraulic pump drive gear (8) on front end of input shaft (22) drives idler (3) mounted on front end of output shaft (31); idler drives hydraulic system pump. Shift lever (12) engages sliding gear (37) on output shaft with gear machined on input shaft (22).**

| | | | |
|---|---|---|---|
| 1. Needle roller bearing | 10. Needle bearing | 19. Snap ring | 28. PTO shaft guard |
| 2. Snap ring | 11. Gasket | 20. Housing | 30. Dowel |
| 3. Idler gear | 12. Shift lever | 21. Plug | 31. Output shaft |
| 4. Ball bearing | 13. "O" ring | 22. Input shaft & gear | 32. Oil seal |
| 5. Snap ring | 14. Shift shaft & lever | 23. Snap ring | 33. Ball bearing |
| 6. Snap ring | 15. Detent ball | 24. Ball bearing | 34. Spacer |
| 7. Snap ring | 16. Detent spring | 25. Snap ring | 35. Snap ring |
| 8. Pump drive gear | 17. Shift fork | 26. Gasket | 36. Snap ring |
| 9. Snap ring | 18. Shift rail | 27. PTO shield | 37. Sliding gear |
| | | 28. Rear cover plate | 38. Pin |

Operate shift lever to move fork (17) to forward detent groove or shift rail, then move fork rearward to push shift rail out rear of bore. Grasp end of rail and withdraw from housing, catching detent ball (15) and spring (16) as rail is withdrawn from fork then remove the shift fork. Drive pin (38) from shift lever and shaft, remove shift lever and withdraw shaft towards inside of housing. Remove "O" ring (13) from groove in shaft.

Remove snap ring (6) at front end of output shaft, then pull idler gear (3) and bearing assembly from shaft. Remove snap rings (2 & 5) and press bearing from gear if worn or damaged and gear is otherwise serviceable. Remove output shaft (31) out rear of housing and remove gear (37) from top opening. Remove snap ring (36) and press bearing (33) and spacer (34) off front end of shaft if bearing is worn or damaged and shaft is serviceable. Remove needle roller bearing (1) from front of housing if bearing is worn or damaged.

Carefully clean and inspect all parts, then reassemble using new gasket, oil seal and "O" ring and other parts as necessary. Reassemble by reversing disassembly procedure and noting the following: Install new oil seal (32) in cover plate (28) with lip of seal forward. Press on lettered end of needle roller bearing cages only and use proper size mandrel when installing new needle bearings. Clean threads of the four lower cover plate cap screws and treat threads with hydraulic grade Loctite when reinstalling cover.

### Models 780, 880, 990, 3800 and 4600

195. With assembly removed as outlined in paragraph 192, pour all lubricant from housing, then refer to exploded view in Fig. 135 and proceed as follows:

Remove shift rail retaining pin (12); a hole is drilled in upper end of pin to aid in removal. Push shift rail (13) forward out of housing, catching the detent ball and spring (9) as rail is withdrawn from fork (11). Remove shift fork.

Remove snap ring (not shown) from rear end of input shaft (17) and drive the shaft forward until clear of rear bearing (16). Push bearing rearward out of housing, then remove second snap ring from rear end of input shaft. The shaft can now be withdrawn out front of housing; remove gear (15) out top opening. Remove snap rings and press input shaft from pump drive gear (1) and bearing in-

ner race (3) if necessary. Inspect needle roller bearing (2) and remove from housing if worn or damaged.

Unlock tab washer (38) on front end of idler shaft and remove nut (39) and washer. Remove idler gear (37) and bearing assembly, leaving stub shaft (6) in housing at this time. Remove snap rings and press bearing (4) from gear if bearing is excessively worn or rough.

Remove the socket head screw (36) from front end of output shaft (20), then using soft drift pin and hammer, drive output shaft rearward out of housing. Take care not to damage internal threads in front end of shaft. Lift gears out top of housing and remove retaining washer, locking pin and needle bearing inner race (33) from front of housing. Inspect needle roller bearing (34) and remove if worn or damaged. Remove ball bearing (24) with snap ring, spacer (26) and shims (25) from rear of housing, if not removed with shaft. Note: Shims (25) were not used on early production models 880 and 990; however a new housing requiring use of shims may have been installed or housing modified on some early units.

Carefully clean and inspect all parts and renew any not suitable for further service. Reassemble by reversing disassembly procedure and observing the following: When installing output shaft (except on early 880 and 990 with 2.834 inch O.D. bearing), install shims (25) as necessary so that rear face of bearing (24) protrudes 0.002-0.005 from face of housing. Peen inner diameter of washer (35) against head of screw (36) after securely tightening screw. Refer to Fig. 136 for proper installation of snap rings on input shaft. Clean threads of four lower rear cover retaining cap screws and apply hydraulic grade Loctite sealant, then securely tighten screws.

## Model 1200

196. Remove housing and gear assembly as outlined in paragraph 192, drain all lubricant from housing, refer to exploded view in Fig. 137 and proceed as follows:

Unbolt and remove rear cover plate (9), then remove shims (7 and 13), keeping shims from each bearing bore separate and identified. Bump input shaft rearward out of housing; remove bearing cone and roller assemblies from shaft and bearing (4) cup from housing if worn or scored. Move shift lever to work shift rail (17) rearward out of bore, then withdraw rail catching detent ball (26) and spring (27) as rail is removed from fork (24). Remove fork from housing. Bump out-

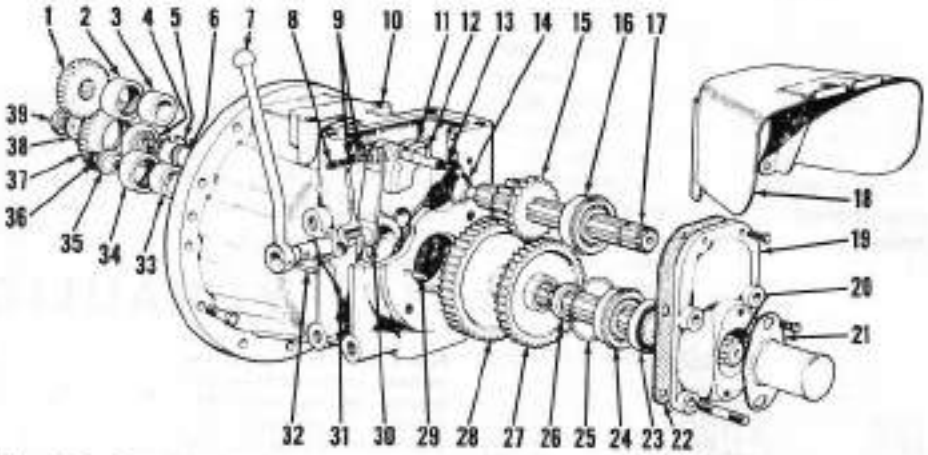


**Fig. 135 — Exploded view of two-speed PTO housing and gear assembly for models 780, 880, 990, 3800 and 4600. Gear (1) on front end of input shaft (17) drives idler gear (37) mounted on stub shaft (6); idler gear drives hydraulic system pump. Shift lever (7) slides gear (15) on input shaft to engage with either low speed gear (28) or high speed gear (27) on output shaft; a neutral detent is also provided. Shims (25) were not used on early models 880 and 990.**

1. Pump drive gear
2. Needle roller bearing
3. Bearing inner race
4. Ball bearing
5. Snap ring
6. Idler stub shaft
7. Shift lever
8. Plug
9. Detent spring & ball
10. Housing
11. Shift fork
12. Retaining pin
13. Shift rail
14. Snap ring
15. Sliding gear
16. Ball bearing w/snap ring
17. Input shaft
18. PTO shield
19. Rear cover plate
20. Output shaft
21. PTO shaft guard
22. Gasket
23. Oil seal
24. Ball bearing w/snap ring
25. Shims
26. Spacer
27. High speed gear
28. Low speed gear
29. Dowel
30. Shift shaft & lever
31. "O" ring
32. Pin
33. Inner race
34. Needle Bearing
35. Washer
36. Screw
37. Idler gear
38. Tab washer
39. Nut

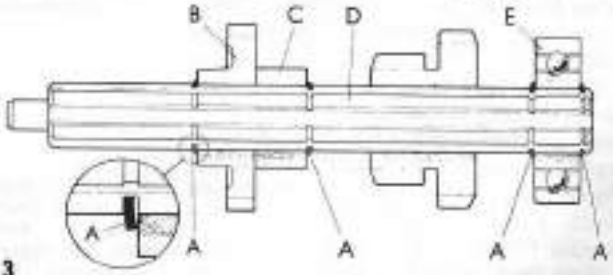


**Fig. 136 — When installing snap rings (A) on input shaft (D) for models 780, 880, 990, 3800 and 4600, be sure that cup side of snap ring is towards gear (B), bearing race (C) or ball bearing (E) as shown in inset.**

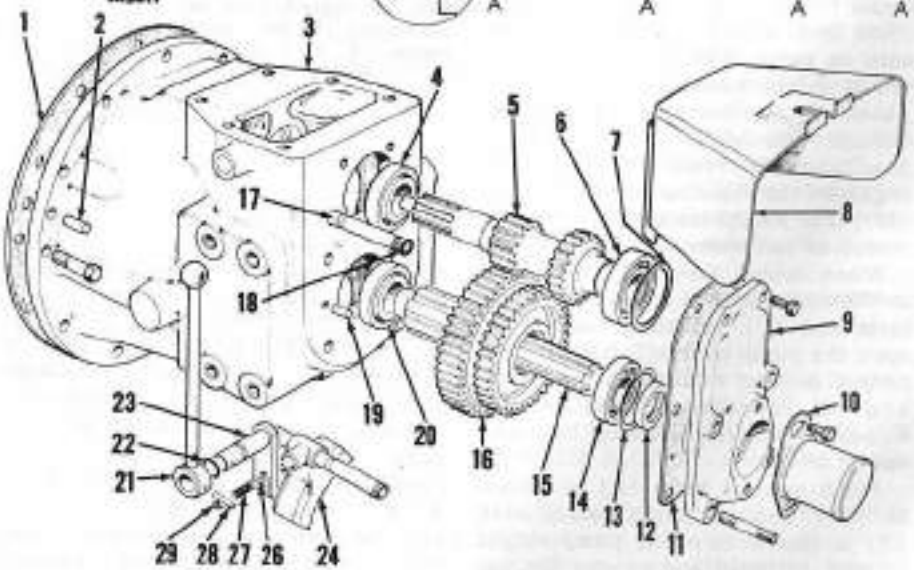


**Fig. 137 — Exploded view of model 1200 two-speed PTO housing and gear assembly. Sliding gear (16) on output shaft (15) engages either the low speed (front) gear or high speed (rear) gear machined on input shaft (5); a neutral detent for shift fork (24) is also provided. As model 1200 is equipped with front mounted hydraulic pump, hydraulic system operation is independent of PTO clutch.**

1. Gasket
2. Dowel pin
3. Housing
4. Taper roller bearing
5. Input shaft
6. Taper roller bearing
7. Shims
8. PTO shield
9. Rear cover plate
10. PTO shaft guard
11. Gasket
12. Oil seal
13. Shims
14. Taper roller bearing
15. Output shaft
16. Sliding gear
17. Shift rail
18. Snap ring
19. Taper roller bearing
21. Shift lever
22. "O" ring
23. Shift shaft & lever
24. Shift fork
25. Detent ball
27. Detent spring
28. Pin
29. Plug

put shaft (15) rearward from housing and remove front bearing cone and gear (16) out top opening. Remove rear bearing cone from output shaft and front bearing cup from housing. Drive out pin (29), remove shift lever (21) and withdraw shaft (23) from inside of housing. Remove "O" ring (22) from groove in shaft.

Reassemble by reversing disassembly procedure and observing the following: Install same shim thickness as removed at rear side of shaft rear bearings, then install rear cover plate with new gasket and check shaft end play. End play of each shaft in bearings should be 0.002-0.004; if end play of either shaft is not within limits, remove rear cover plate and vary thickness of shims (7 and/or 13) as necessary to obtain correct end play. When end play of both shafts is correct, remove the four lower cap screws, clean the threads and apply hydraulic grade Loctite sealant, then securely reinstall the cap screws.

# IMPLEMATIC HYDRAULIC SYSTEM

The model 880 and 990 Implematic hydraulic system incorporates four methods of hydraulic control; traction control ("TCU"), draft control, height (position) control and remote control for operation of external cylinders. Refer to paragraph 222 in SELECTAMATIC HYDRAULIC SYSTEM section for fluid recommendations.

## HYDRAULIC SYSTEM OPERATING PRINCIPLES

### Models 880 Implematic and 990 Implematic

197. **TRACTION CONTROL.** Traction control is used with implements equipped with depth wheels, and provides for transfer of implement weight to tractor rear wheels to increase traction.

For traction control, flexible cable (J—Fig. 138) is connected to top link and control lever (A) is placed in traction control ("TCU") position. Pump output then flows through open depth control valve (F) and spring loaded "TCU" valve (G) which restricts flow. This causes a back pressure on pump side of "TCU" valve which reacts against ram cylinder piston (K) exerting a lifting force on linkage. This lifting force, which is insufficient to raise implement, is regulated by turning control knob (M); thus weight transfer can be adjusted to suit various conditions.

When control lever (A) is moved to "lower" position, screw (B) contacts rod (C), actuating linkage to open the pump valves (D & E). Pump output is then returned to reservoir and oil in ram cylinder escapes through valve (E), allowing lift linkage to lower.

When control lever (A) is moved to "raise" position, depth control valve (F) is closed, directing pump output to ram cylinder and raising the lift linkage. As ram cylinder rockshaft turns to raised position, arm (R) contacts trip lever (S) and snaps spring loaded toggle (T) over center to open pump valve (D). This unloads the hydraulic pump and oil is retained in ram cylinder to support the lift linkage in raised position.

198. **DRAFT CONTROL.** Draft control is used to maintain desired implement depth when operating ground engaging implements not equipped with gage wheels.

For draft control operation, flexible control cable (J—Fig. 139) is connected to spring loaded top link (H). When control lever (A) is moved to any position within "depth control" range, depth control valve (F) is opened and both pump valves (D & E) are closed; thus, pump output is directed through depth control and "TCU" valves. Since back pressure against ram cylinder piston resulting from restriction through "TCU" valve is not enough to support implement weight, implement is lowered into working position. Implement draft reaction on top link (H) will compress link, thereby actuating flexible cable and linkage to move depth control valve towards closed position. The partially closed valve restricts pump output, increasing back pressure against ram cylinder piston. When implement reaches a depth so that draft reaction on top link closes depth control valve to a position that lifting force of linkage due to back pressure is equal to implement weight, implement will not go any deeper. When depth of implement changes because of ground surface irregularities, draft reaction on top link opens or closes depth control valve to decrease or increase lifting force of linkage, thus correcting depth of implement to desired position.

Moving control lever (A) within "depth control" range moves the pivot point of depth control valve operating lever (N), varying the amount of top link compression required to maintain a balance between lifting force and weight of implement. Moving control

**Fig. 138 — Drawing illustrating Implematic hydraulic system when operating in traction control Refer to Fig. 139 for draft control operation, to Fig. 140 for height (position) control operation and to Fig. 141 for operation of remote external cylinder. Paragraph 197 explains traction control system operation.**

A. Control lever
B. Thrust screw
C. Push rod
D. Pump valve
E. Leak-off valve
F. Depth control valve
G. Traction control valve
H. Compression spring
J. Flexible cable
K. Ram piston
L. Pivot bracket
M. Traction control knob
N. Valve operating lever
O. Check (non-return) valve
R. Striker arm
S. Trip lever
T. Toggle

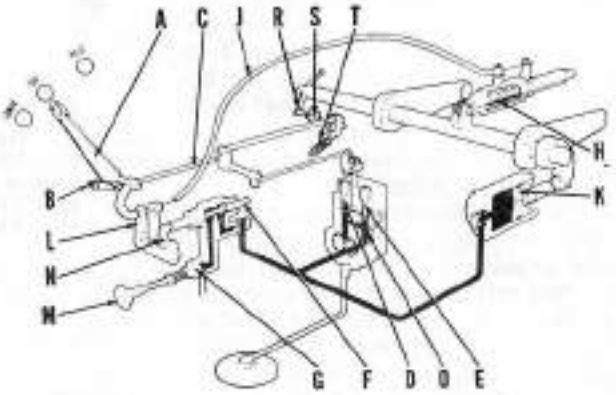


**Fig. 139 — View illustrating draft control system operation. Refer to Fig. 138 for legend, and to paragraph 198 for explanation of draft control operation.**

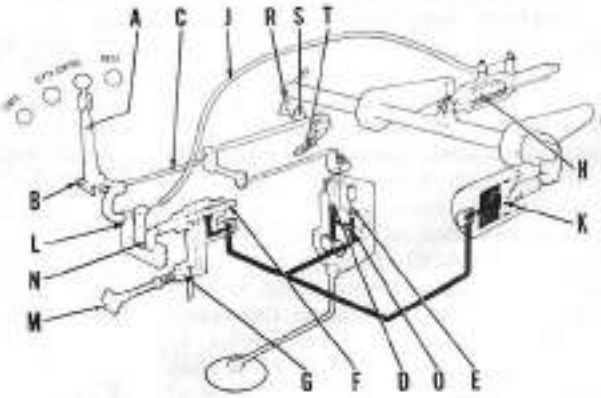

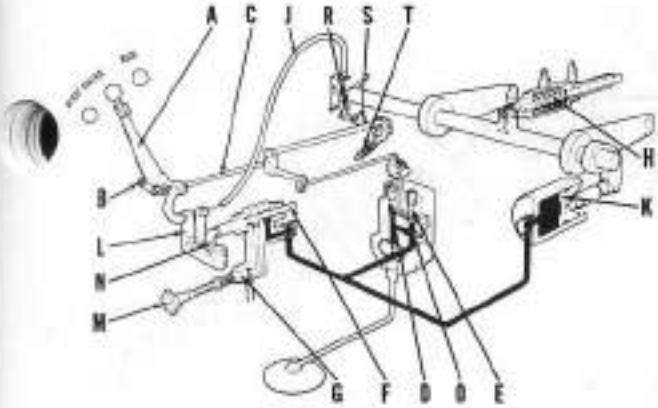


Fig. 140 — View showing operation of hydraulic system when operating in height (position) control; refer to paragraph 199 for explanation of operation. For legend, refer to Fig. 138.

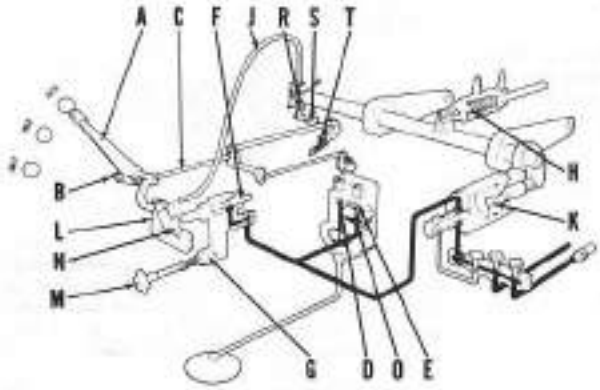


Fig. 141 — For operation of remote external cylinders, a control valve is required. Control valve incorporates a shut-off to system ram cylinder. Refer to paragraph 200 for explanation of remote control operation and to Fig. 138 for legend.

lever towards "lower" position moves operating lever pivot point so that more compression of top link is required, thus the implement will go deeper until the increased draft reaction will compress link and close valve.

Moving control lever to "raise" position will close depth control valve until linkage is in fully raised position as outlined in paragraph 197.

199. **HEIGHT (POSITION) CONTROL.** Position control is used where hydraulic system lift linkage is required to be maintained in a certain position or height above ground.

For position control operation, flexible cable (J—Fig. 140) is connected to rockshaft so that any movement of rockshaft will open or close the depth control valve. Moving control lever (A) within the "height control" range changes the pivot point of the depth control valve operating lever (N). Thus, for any position of control lever within "height control" range, the rockshaft and lift linkage will assume a relative position.

Moving control lever away from "raise" position will open depth control valve and reduce back pressure against ram cylinder piston, allowing lift linkage and implement to lower. As the rockshaft turns, the flexible cable moves the depth control valve towards closed position. Thus, when linkage lowers to a certain position, back pressure is again sufficient to support implement weight.

When control lever is moved towards "raise" position, depth control valve is closed, increasing back pressure against ram cylinder piston and raising linkage and implement. As the rockshaft turns, flexible cable opens depth control valve until back pressure is reduced to a point that lifting force equals implement weight and linkage will support implement at a higher position.

Moving control lever to "raise" position will close depth control valve and linkage will assume fully raised position as outlined in paragraph 197.

200. **REMOTE CONTROL OF EXTERNAL CYLINDER.** For remote cylinder control, flexible cable (J—Fig. 141) is disconnected which releases depth control operating lever (N) and depth control valve remains in closed position. When control lever (A) is moved to "raise" position, the two pump valves (D & E) are closed and pump outlet is directed to remote control valve and cylinder. With control lever in "hold" position, screw (B) contacts push rod (C) and pump valve (D) is opened which unloads pump, but holds oil in external cylinder as valves (E & O) are closed. When control lever is moved to "LOWER" position, both pump valves (D & E) are opened and oil in external cylinder can return to reservoir through valve (E).

To retain lift linkage in raised position when using external cylinder, disconnect striker arm (R) from rockshaft with override control; otherwise, striker arm will trip the overcenter linkage and open pump valve (D) so that no pressure will be available to operate remote cylinder.

## TROUBLE SHOOTING

### Models 880 Implematic and 990 Implematic

201. When trouble shooting problems encountered with the Implematic hydraulic system, refer to the following list of malfunctions and possible causes:

A. LIFT FAILS TO RAISE OR RAISES VERY SLOWLY. Could be caused by:

1. Override control disengaged and in "hold" position.
2. Three-way (remote) control valve closed to ram cylinder.
3. Relief valve opening due to lift being overloaded.
4. Low oil level in transmission.
5. Hydraulic pump inlet filter choked.
6. Faulty ram cylinder relief valve.
7. Faulty depth control valve or incorrectly adjusted flexible control cable.
8. Leak in pressure pipe or connection.
9. Worn hydraulic pump.

B. LIFT FAILS TO HOLD IN RAISED POSITION. Could be caused by:

1. Control lever not fully into "raise" position.
2. Automatic hold mechanism not correctly adjusted.
3. Faulty ram cylinder relief valve.
4. Incorrect adjustment of flexible control cable or faulty depth control valve.
5. Leak in pressure pipe or connection.
6. Pump valves faulty.
7. Worn ram cylinder piston or sealing rings leaking.

C. LIFT FAILS TO LOWER OR LOWERS SLOWLY. Could be caused by:

1. Three-way (remote control) valve not fully open.
2. Oil in transmission of heavier weight than recommended.
3. Pump control valve linkage incorrectly adjusted.

D. IMPLEMENT WILL NOT MAINTAIN DESIRED DEPTH. Could be caused by:

1. Insufficient tension on control lever pivot allowing lever to move.

2. Implement adjustment incorrect.
3. Flexible control cable not properly adjusted.

## SYSTEM CHECKS AND ADJUSTMENTS

### Models 880 Implematic and 990 Implematic

202. **PUMP VALVE LINKAGE.** Refer to Fig. 142 and remove plug (B) from top of power take-off housing and check to see that when control lever is in "raise" position and lift linkage is lowered (engine dead) that washer (D) under nut (C) is free to turn. If not, adjust pump valve linkage as follows:

With engine stopped, linkage lowered and override control in engaged position, place control lever in "raise" position and remove cover plate from right hand rockshaft housing. Refer to Fig. 143 and unscrew nut (A) until flush with end of rod. Working through plug (B—Fig. 142) opening, screw nut (C) down slowly until washer (D) can just be turned with finger, then unscrew the nut two complete turns and reinstall plug (B).

Raise lift linkage by hand and lock with locking latch. The automatic hold mechanism should now be tripped rearward into "hold" position with heel of operating lever (E—Fig. 143) resting against housing. Tighten nut (A) until a thin feeler gage can be inserted between heel of lever and housing, then unscrew nut four turns.

Lift linkage to highest point of lift and measure distance from top corner of leveling lever to rear face of seat support. Lower the linkage, start engine and attach a heavy implement to linkage, then place control lever in "raise" position and allow lift to raise implement to maximum lift where pump unloads and take a second measurement between leveling lever and rear face of seat support. The difference between the two measuremnts (F—Fig. 144) should be ¼ to ⅜-inch. If difference between measurements is outside these limits, loosen clamp bolt (G) and move striker backward or forward as required. Repeat checking procedure after adjusting striker and when measurements are within limits, be sure clamp bolt is tight and reinstall cover.

203. **SINGLE ACTING TOP LINK AND FLEXIBLE CABLE ADJUSTMENT.** To adjust early type top link that provides draft control when under compression only, disconnect flexible cable from link, refer to Fig. 145 and proceed as follows:

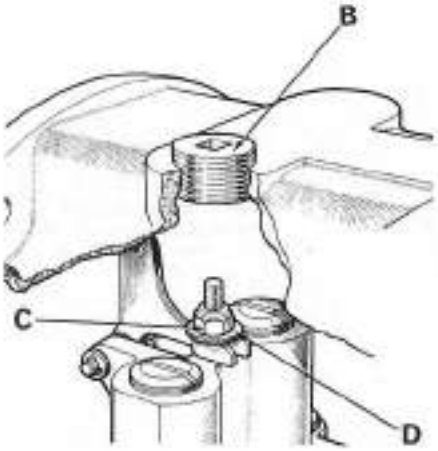


**Fig. 142 — Cut-away view showing pump control valves within PTO housing. Adjusting nut (C) and washer (D) are accessible after removing plug (B). Refer to text for adjusting procedure.**

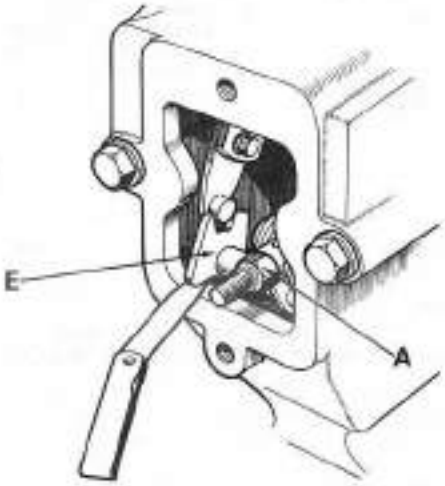


**Fig. 143 — View with cover removed from right rockshaft bracket showing pump valve linkage adjusting nut (A) and operating lever (E). Refer to text.**

Loosen lock nut (H) and unscrew adjusting nut (I) until threaded shaft has some end play, then turn nut (I) in to remove all end play, but not compress spring. Tighten locknut (H), then check distance between the two flexible cable attachment points (dimension "R"); if not within limits of 4.300-4.310, add or remove shims as required between adjusting nut (I) and cable attachment bracket. For accuracy in measuring this dimension (R), the special gage shown in Fig. 147 may be fabricated locally.

To adjust cable, first be sure bracket dimension (R—Fig. 145) is correct, then proceed as follows: Loosen locknut (J), hold hex portion of cable and turn adjuster (K) fully onto cable, then reconnect cable to top link. Start engine and attach heavy implement to lift linkage Place control lever in

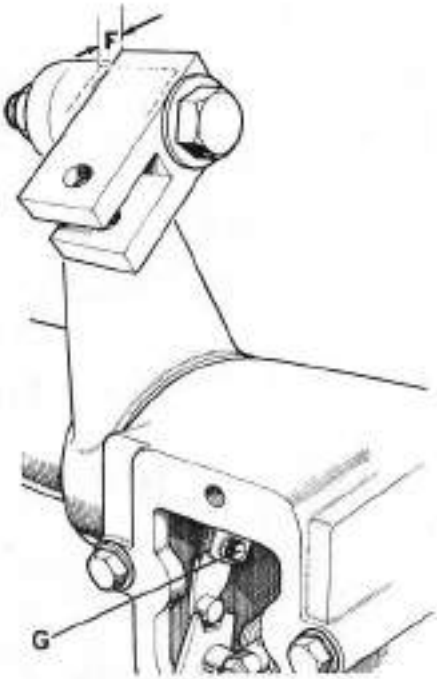


**Fig. 144 — To check adjustment of striker arm, measure difference (F) between measurements from leveling lever bracket to seat with lift supported by hand and under power. Loosen screw (G) to adjust striker; refer to text for procedure.**

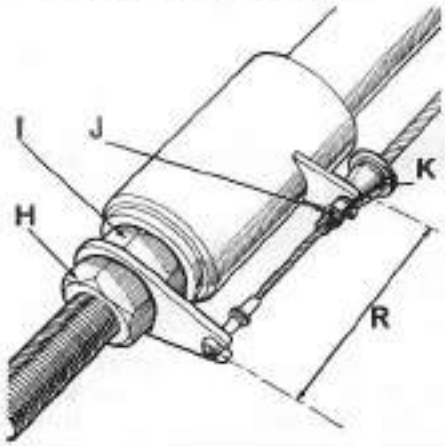


**Fig. 145 — View showing adjustment points of top link and flexible control cable. Follow adjustment procedure in text.**

H. Locknut
I. Adjusting nut
J. Locknut
K. Nut
R. Setting dimension

"raise" position and allow linkage to lift to fully raised position and the pump to unload. Stop engine and move control lever ½-inch forward (distance "M"—Fig. 146). Unscrew adjuster (K—Fig. 145) from end of outer cable until implement starts to creep downward, then screw adjuster back on cable one full turn and tighten locknut (J).

204. **DOUBLE ACTING TOP LINK AND FLEXIBLE CABLE ADJUSTMENT.** To adjust late type top link that provides draft control reaction when either under tension or com-

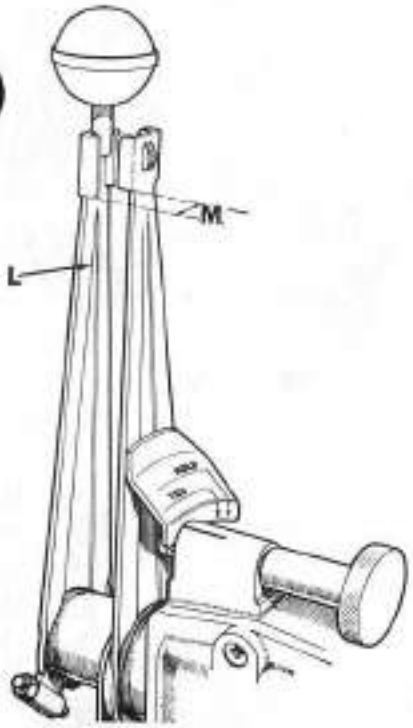


Fig. 146 — View showing point to measure ½-inch movement (M) of control lever (L) when adjusting flexible control cable as outlined in paragraph 203 or 204.

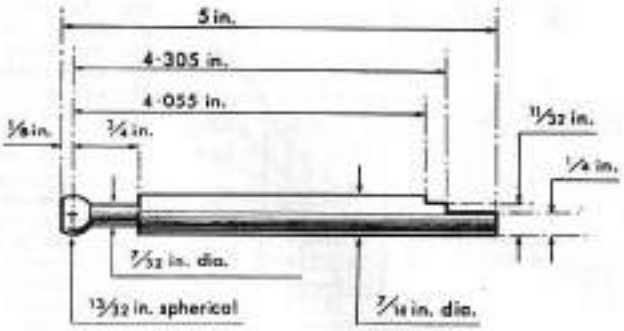


Fig. 147 — View of top link cable bracket adjustment gage that can be fabricated locally; refer to dimensions on drawing. Gage can be used to check either early type single acting or late type double acting top link.

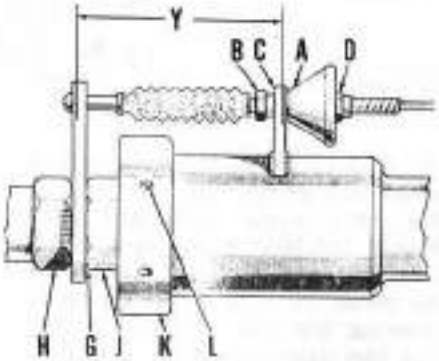


Fig. 148 — View showing adjustment points of late type double acting top link; refer to paragraph 204 for adjustment procedure.

A. Adjusting nut
B. Locknut
C. Cable bracket
D. Hex section
G. Shims
H. Locknut
J. Adjusting nut
K. Adjusting nut
L. Set Screw

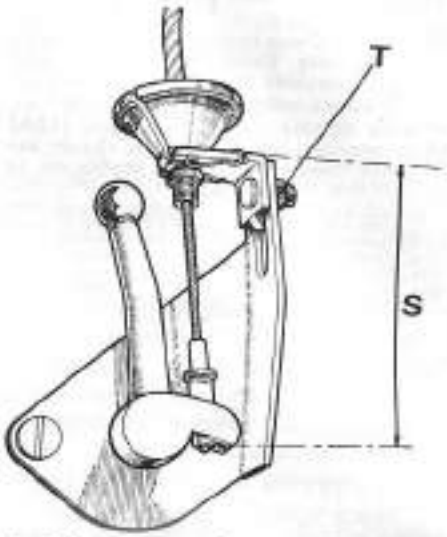


Fig. 150 — Loosen clamp screw (T) and move cable bracket to obtain correct distance (S) between bracket and override arm; refer to Fig. 147 for view showing adjustment gage. Refer to text for procedure.

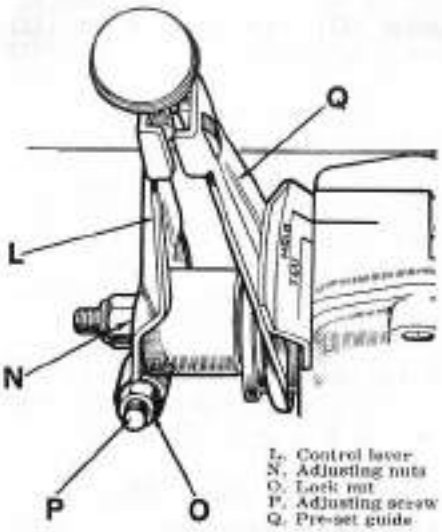


L. Control lever
N. Adjusting nuts
O. Lock nut
P. Adjusting screw
Q. Pre-set guide

Fig. 149 — Adjusting control lever tension nuts (N) and push rod screw (P); refer to text for procedure.

pression, refer to Fig. 148 and proceed as follows:

Loosen set screw (L), back adjusting nut (K) off spring housing so that spring has end play. Loosen locknut (H), back adjusting nut (J) off until threaded shaft has end play in spring. Turn adjusting nut (K) onto housing so that spring has no end play, but is not compressed, and tighten set screw (L). Turn adjusting nut (J) in so that threaded shaft has no end play in spring, but spring is not compressed, then tighten locknut (H). Measure distance (Y) between the two cable attachment points; if not within limits of 4.05-4.06, add or remove shims at (G) as required.

To adjust cable, first be sure bracket dimension (Y) is correct, then proceed as follows: Attach weight of about 800 pounds to lower lift links only and connect cable to top link. Loosen locknut (B) and turn adjuster (A) fully onto cable. Raise weight on lower links to full lift height and stop engine. Move control lever forward ½ to ¾-inch from "raise" position. Turn adjuster (A) toward bracket (C) until lift linkage starts to creep down, then turn adjuster back away from bracket seven turns and tighten locknut (B). Note: Hold outer cable from turning with wrench on hex portion (D) while making adjustments and loosening and tightening locknut (B).

205. **CONTROL LEVER ADJUSTMENT.** With top link and flexible cable adjusted as outlined in paragraph 203 or 204, lower the implement or weight and disconnect cable from top link. Push control lever (L—Fig. 149) fully forward and check that lever has resistance to being moved rearward from this position. If lever requires only slight pressure to move it rearward, loosen outer nut (N) and turn inner nut inward until noticeable resistance to movement is obtained, then tighten outer nut.

Start engine and raise implement until it reaches fully raised (hold) position and pump unloads, then stop engine. Loosen locknut (O) and back screw (P) out three to four turns. Move the pre-set guide (Q) so that line marked "HOLD" on guide is aligned with line on housing, then move control lever forward until it it aligned with the pre-set guide. Turn screw (P) inward until implement starts to creep down, then back screw out one full turn and tighten locknut. Lower the implement or weight and remove from linkage and reconnect flexible cable to top link.

206. **ROCKSHAFT CABLE BRACKET ADJUSTMENT.** With lift linkage raised and supported on latch and with engine stopped, measure distance (S—Fig. 150) using gage fabricated to dimensions shown in Fig.

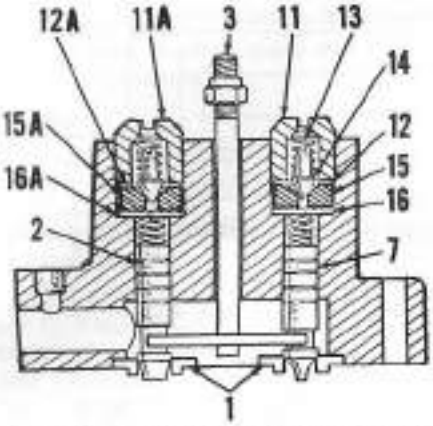


**Fig. 151 — Cross-sectional view of pump valve assembly. Relief valve in pump control valve retainer (11) limits systems pressure, whereas relief valve in leak-off (ram cylinder return) valve retainer (11A) limits pressure in ram cylinder circuit due to shock loads imposed by implement on lift linkage**

2. Leak-off valve
3. Operating lever
7. Control valve
11. Valve retainer
11A. Valve retainer
12. Adjusting shims
12A. Adjusting shims
13. Valve spring
14. Valve poppet
15. Valve seat
15A. Valve seat
16. Restrictor
16A. Restrictor

147. If distance (S—Fig. 150) is not within limits of 4.300-4.310, loosen nut (T) and move bracket as required, then tighten nut.

207. **SYSTEM RELIEF PRESSURE.** To check system relief pressure on models equipped with remote control valve, connect a 3000 psi hydraulic gage to remote cylinder port and pressurize port. On models without remote control valve, connect pressure gage to connector block (1—Fig. 159). With lift linkage lowered and engine running, withdraw override lever to disengage automatic hold mechanism and move control lever to "raise" position. Gage reading should be 2300 psi with transmission oil at operating temperature and engine running within normal operating speed.

If gage reading is excessively high or low, it will be necessary to add or remove shims (12—Fig. 151) between retainer (11) and relief valve seat (15). To gain access to pump valve housing, remove PTO housing as outlined in paragraph 192. Unscrew retainer (11) and remove shims to increase pressure or add shims to decrease system relief pressure. Shims are available in thicknesses of 0.003, 0.007 and 0.015. If removing shims does not increase system relief pressure, check for leakage past ram cylinder piston; worn, sticking or damaged valves; loose connections or leaking pressure line or worn pump.

208. **RAM CYLINDER SAFETY VALVE.** To prevent possible damage to hydraulic components, a relief valve identical to pump relief valve is incorporated in the leak-off valve (2—Fig. 151) under retainer (11A). Should pressure in the ram cylinder circuit exceed the relief valve setting, the relief valve will pop off its seat allowing the leak-off valve to open. The ram cylinder safety valve is adjusted to open at 2500 psi. Normally, the valve should not require adjustment unless servicing the pump valve assembly. To check ram cylinder safety valve relief pressure, proceed as follows:

Remove PTO housing and gear assembly as outlined in paragraph 192. Remove the control valve plunger retainer (11), remove all shims (12) and reinstall retainer. Reinstall PTO housing and gear assembly and refill transmission. With pressure gage installed as outlined in paragraph 207, follow same procedure as for checking system relief pressure. Gage reading should be 2500 psi. Add or remove shims (12A) between retainer (11A) and seat (16A) as required to decrease or increase pressure setting.

When ram cylinder safety relief valve setting is near 2500 psi, reinstall shims (12) removed from under retainer (11) to return system relief pressure to normal 2300 psi.

**Fig. 152 — Exploded view of hydraulic pump assembly. The check valve (4) for ram cylinder circuit is fitted in pump body. Pump valve assembly (see Figs. 151 and 153) attaches to top face of pump body. Sealing "O" rings fitted on front side of inner bearings (10) are not shown.**

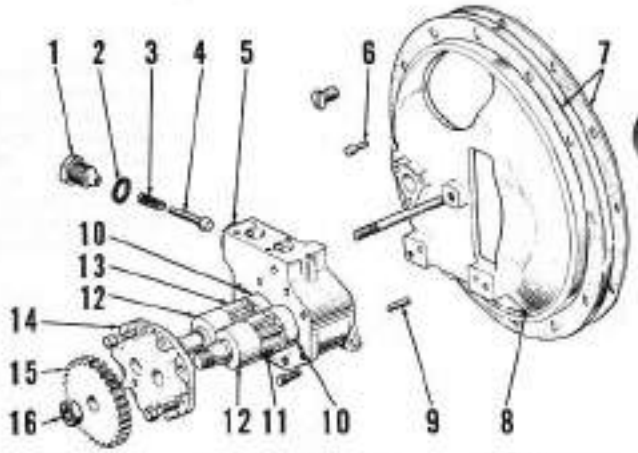


1. Check valve guide
2. Bonded seal ring
3. Check valve spring
4. Valve poppet
5. Pump body
6. Dowel pin
7. Gaskets
8. Mounting plate
9. Dowel pin
10. Inner bearings
11. Driven gear
12. Outer bearings
13. Idler gear
14. Pump cover plate
15. Drive gear
16. Nut

## PUMP AND VALVE ASSEMBLY

### Models 880 Implematic and 990 Implematic

209. **R&R PUMP AND VALVE ASSEMBLY.** To remove the hydraulic pump (Fig. 152) and valve (Fig. 153) as an assembly, first remove the PTO housing and gear assembly as outlined in paragraph 192. The pump and valve unit can then be unbolted and removed from mounting plate (8—Fig. 152).

To reinstall pump, fit new "O" ring on pump outlet (pressure) connector, lubricate the "O" ring and take care that ring is not displaced when pump is pushed into position. Lubricating pipe on pump must be aligned so that it will enter PTO gear housing when installing the PTO assembly. Refill transmission after reinstalling PTO gear and housing unit.

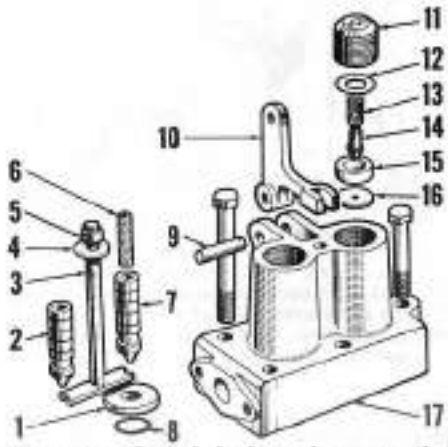


**Fig. 153 — Exploded view of pump valve assembly; refer also to cross-sectional view in Fig. 151. Valve seats (1) and "O" rings are retained between valve body (17) and pump body (5—Fig. 152).**

1. Valve seats
2. Leak-off valve
3. Valve operating lever
4. Washer
5. Adjusting nut
6. Valve return spring
7. Pump control valve
8. "O" rings
9. Pivot pin
10. Bellcrank
11. Valve retainer
12. Pressure adjusting shims
13. Relief valve springs
14. Relief valve poppets
15. Valve seats
16. Restrictor washers
17. Valve body

210. **OVERHAUL PUMP.** Unless necessary to renew pump body, it is not necessary to remove the valve assembly; proceed as follows: Remove nut (16—Fig. 152) and pull gear (15) from shaft. Extract key from shaft keyway, then unbolt and remove pump cover (14). If the rotor (11 & 13) and bushing (10 & 12) sticks in body, rap edge of body against wood block to dislodge them. Unscrew plug (1) and remove check valve (4) and

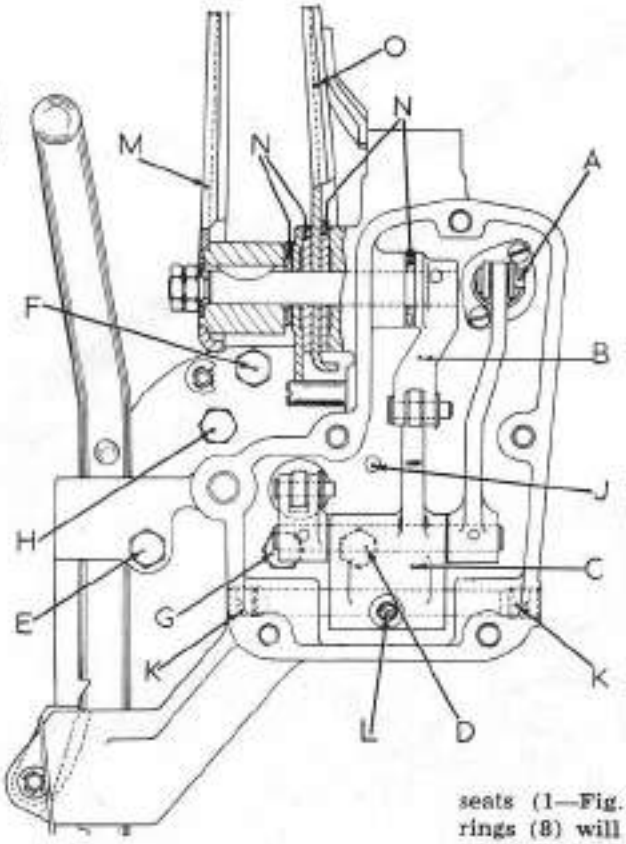


**Fig. 154 — View of control lever mechanism with cover removed and control lever shaft section cut-away. Refer to Fig. 156 for exploded view of mechanism.**

A. Cable attaching pin
B. Operating lever
C. Floating pivot
D. Housing retaining bolt
E. Housing retaining bolt
F. Housing retaining bolt
G. Valve body bolt
H. Valve body bolt
J. Oil level hole
K. Shaft retaining plugs
L. Set screw
M. Control lever
N. Friction washers
O. Pre-set guide

spring (3). Wash all parts in solvent and inspect as follows:

Inspect pump body for gear track wear, especially at intake side. Check bushings and shaft journals for scoring or excessive wear. Tooth contact marks should be even across entire width of gear teeth. Bushings are available as matched inner pair (10) and outer pair (12); however, both the inner and outer pairs should usually be renewed as a complete set of four. Pump gears (rotors) are available as a matched set only.

To reassemble pump, coat new "O" rings (not shown) with grease and install them on inner bushings (10), then lubricate bushings with oil and push them into pump body until the "O" rings contact body. Lubricate the gears and install them in their proper bores, then lubricate and install the outer bushings. Install cover and tighten retaining cap screws to a torque of 40 Ft.-Lbs. Insert woodruff key in shaft, install gear and retaining nut and tighten nut to a torque of 45 Ft.-Lbs. Check to see that pump will turn without binding. Install check valve (4), spring (3) and plug (1) with new gasket (2).

211. **OVERHAUL PUMP VALVE ASSEMBLY.** With pump and valve unit removed as outlined in paragraph 209, unbolt and remove the valve housing from pump assembly. Valve seats (1—Fig. 153) and sealing "O" rings (8) will be removable as pump and valve are separated. Unscrew the retainers (11) and remove pressure relief valve springs (13), valve plungers (14), valve seats (15) and orifice washers (16). CAUTION: Be sure to keep the shims (12) located between retainers (11) and seats (15) separated and identified so that the correct shim thickness can be reinstalled in appropriate valve bores. Remove nut (5) and flat washer (4), then withdraw operating lever (3) and control valves (2 & 7) from bottom of valve housing.

Carefully clean and inspect all parts and renew any that are excessively worn, scored or otherwise damaged. Usually, valves (2 & 7) and housing (17) should be renewed as an assembly; however, new valves may be selected and fit to a used housing. For proper fit, valve bores in housing and valve spool diameter are sized with each size range identified by the following color codes:

Valve Bore Diameter:

| | |
|---|---|
| Red | 0.4684-0.4686 |
| Yellow | 0.4687-0.4689 |
| Blue | 0.4690-0.4692 |

Leak-Off Valve Spool Diameter:

| | |
|---|---|
| Red | 0.4680-0.4682 |
| Yellow | 0.4683-0.4685 |
| Blue | 0.4686-0.4688 |

Control Valve Spool Diameter:

| | |
|---|---|
| Red | 0.4668-0.4672 |
| Yellow | 0.4672-0.4676 |
| Blue | 0.4676-0.4679 |

When obtaining new leak-off or control valve spool, color code must be specified; part number for each valve spool remains the same regardless of size range. Valve fits properly when it can be pushed through bore without binding in any position, but with slight drag. When installed with return spring and pushed inward against spring pressure, spring should return valve to original position.

Reassemble valve unit by reversing disassembly procedure, making sure that shims are reinstalled in correct bores. Position leak-off and control valve seats with new "O" rings on pump body, then install valve housing. Lightly tighten housing retaining cap screws, tap on each side of housing to align seats, then fully tighten the cap screws. Readjust nut (5) as outlined in paragraph 202, adjust ram cylinder relief valve as in paragraph 208 and system relief valve as in paragraph 207 after unit is reinstalled in tractor.

## CONTROL VALVE

### Models 880 Implematic and 990 Implematic

212. **R&R VALVE.** Disconnect lift linkage and remove rockshaft complete with right hand housing. Remove the banjo bolt and two sealing washers connecting pressure pipe to rear of valve housing. Disconnect linkage from lower end of hand brake lever and remove the traction control valve knob. Unbolt and remove the cover from front of control housing. Note: Some oil will run out as cover is removed. Refer to Fig. 154 and remove pin (A) to disconnect flexible cable from depth control valve operating lever. Remove nuts from control lever (M) shaft and pull lever from shaft until free of woodruff key; lever (B) can then be moved forward so that floating pivot (C) will swing down to expose cap screw (D). Remove the three cap screws (D, E & F), then withdraw the complete assembly forward out of axle housing.

Reinstall control valve assembly by reversing removal procedure, using all new gaskets, sealing washers, etc. Make sure that valve housing to axle housing gasket does not obstruct oil hole (J). Be sure control lever shaft is free to pivot in housing, then adjust lever retaining nuts so that friction washers will hold the lever in any set position.

213. **OVERHAUL.** With unit removed, remove cap screws (G & H—Fig. 154) and separate valve body (see Fig. 155) from housing. Catch the ball (17—Fig. 156) and spring (18) as valve body and housing are separated.

Remove the traction control valve plunger (13—Fig. 155) complete with spring (12) and sleeve (11). Remove snap ring (10), washer (9) and spring (8) from depth control valve spindle, then remove snap ring (1) and push valve (5) and sleeve (3) out of valve body. The drilled plug (6) is an oil jet that sprays oil into right rockshaft bracket housing when depth control valve is open. Carefully clean and inspect all parts and renew any not suitable for further service. Valve body (7) and valve (5) are serviced only as a matched assembly; all other parts are available separate from valve body with traction control valve (13) and sleeve (11) being serviced as a matched assembly. The complete valve unit is also available as an assembly.

Reassemble unit using all new "O" rings and when reassembling valve to housing, be sure ball (17—Fig. 156) and spring (18) are in proper position. Stick ball in end of sleeve (11—Fig. 155) with grease and position spring on traction control valve adjusting spindle (24—Fig. 156).

214. **OVERHAUL OPERATING LINKAGE.** Disassembly and reassembly of the housing (28—Fig. 156) and linkage is obvious after examination of unit and reference to Figs. 154 and 156.

When inspecting and reassembling unit, note the following: Control lever shaft (10) should be a free fit in bore of housing (28) and control lever (1) in order that lever friction discs (6, 8 & 33) may be properly tensioned by adjusting lever retaining nuts (2). Lubricate lever shaft with grease when reassembling. Push rod (12) must slide freely in bore of guide (13); renew "O" ring (14) on reassembly. Detent ball (21) seats against flats on traction control adjusting spindle (24) to provide six detent positions for each complete turn of spindle; clean detent ball bore and renew spring (20) if no detent action is noted when turning spindle. Remaining linkage should operate freely, yet show no observable wear.

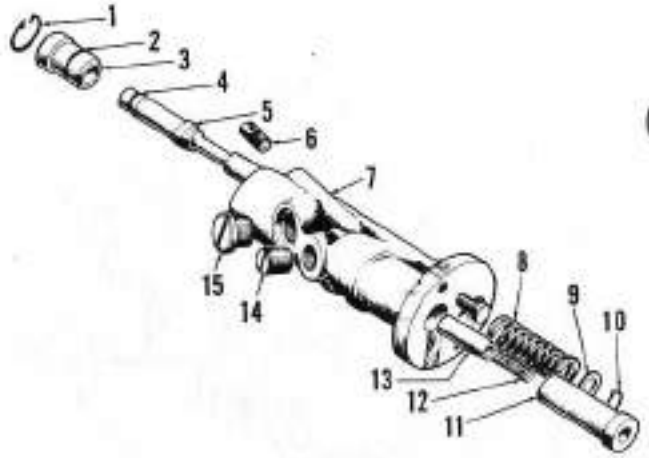


**Fig. 155 — Exploded view of Implematic control valve assembly. Valve body (7) is bolted to control linkage housing (28—Fig. 156).**

1. Snap ring
2. "O" ring
3. Sleeve
4. "O" ring
5. Valve spool
6. Oil jet
7. Valve body
8. Return spring
9. Washer
10. Snap ring
11. Sleeve
12. Spring
13. Plunger
14. Plug
15. Plug

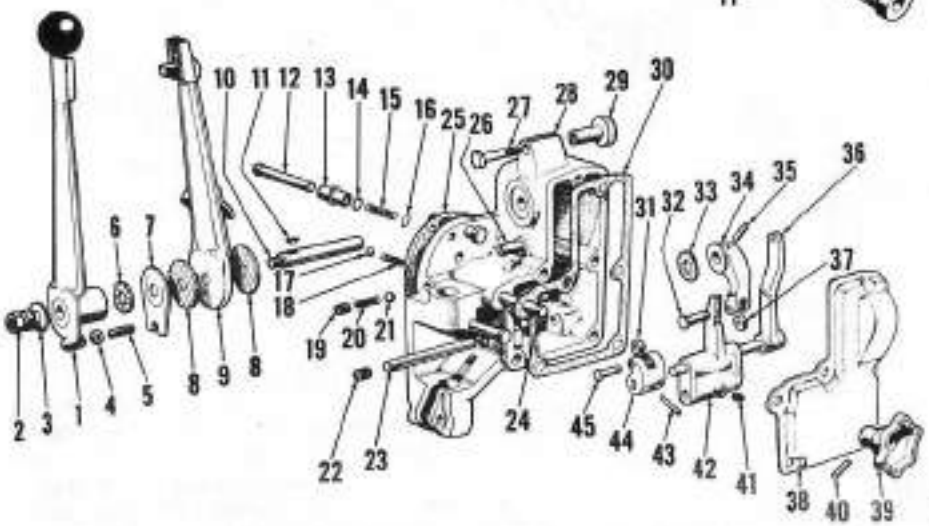


**Fig. 156 — Exploded view of control lever and linkage. Late production units have an "O" ring (not shown) on traction control spindle (24) to prevent leakage of oil around spindle. "O" ring may be installed on earlier units if bore in housing (28) is chamfered 0.030-0.045 and hole in gasket (30) is enlarged to ½-inch. Refer also to Fig. 154.**

1. Control lever
2. Friction adjusting nuts
3. Flat washer
4. Lock nut
5. Adjusting screw
6. Friction washer
7. Friction plate
8. Friction washers
9. Pre-set guide
10. Control lever shaft
11. Woodruff key
12. Push rod
13. Push rod guide
14. "O" ring
15. Return spring
16. Snap ring
17. Check ball valve
18. Spring
19. Plug
20. Detent spring
21. Detent ball
22. Plugs
23. Pivot pin
24. Traction control spindle
25. Gasket
26. Friction plate anchor pin
27. Pre-set guide clamp bolt
28. Housing
29. Locking nut
30. Gasket
31. Roller
32. Pin
33. Friction washer
34. Control arm
35. Pin
36. Operating lever
37. Roller
38. Cover
39. Traction control knob
40. Pin
41. Set screw
42. Floating pivot
43. Pin
44. Valve lever
45. Pin, roller

## ROCKSHAFT AND RAM CYLINDER

### Model 880 Implematic and 990 Implematic

215. **R&R ROCKSHAFT.** Disconnect lift linkage from rockshaft arms, then proceed as follows: Remove cover from right rockshaft support housing and remove nut (A—Fig. 157) and spacer from rear end of hold mechanism linkage rod. Unbolt right hand support bracket from axle housing. Support rockshaft, then unbolt and remove ram cylinder cover (13—Fig. 159); rockshaft and right hand support housing can then be removed from axle housing. Refer to Fig. 158, unbolt and remove override control assembly as shown and remove snap ring (A), then withdraw rockshaft from housing and automatic hold mechanism. The ram cylinder arm (8—Fig. 159) is renewable; otherwise the rockshaft is serviced as a complete assembly which includes ram cylinder arm. To remove arm (8), crack arm at keyway with chisel, then press shaft from arm. Be sure keys are in place and any rough spots are removed from shaft, then heat new arm until sufficiently expanded so that it can be easily pressed onto shaft.

To reinstall rockshaft, reverse removal procedure and observe the following: Push the first spacer forward against spring on hold mechanism linkage rod until a cotter pin can be inserted through holes in spacer and rod. Guide the rod through trunnion (24—Fig. 160) as rockshaft and right support housing are installed, then remove cotter pin.

216. **R&R AND OVERHAUL RAM CYLINDER.** Ram cylinder piston can be removed and a new piston and/or piston ring be installed without removing ram cylinder from axle housing. After removing ram cylinder cover (13—Fig. 159), lift the lift linkage to fully raised position by hand and tie or block in raised position. Remove pin (21) from ram cylinder arm (8) and remove connecting rod (22). Remove the connector (1) or three-way remote valve from front

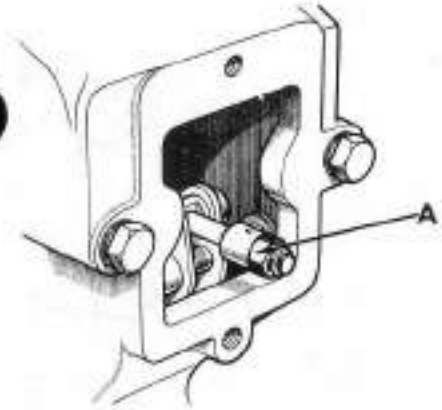


**Fig. 157 — Remove adjusting nut (A) and outer spacer from behind nut when removing rockshaft and right support assembly from tractor. Refer to paragraph 202 for adjustment of nut.**

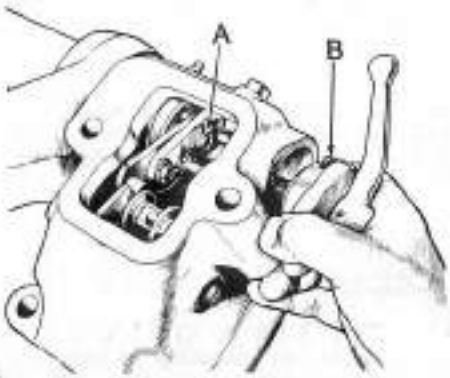


**Fig. 158 — When removing override control lever assembly, detent spring is released as assembly is removed from housing; hold spring depressed when reassembling. Rockshaft can be withdrawn from housing after removing override control lever and snap ring (A).**

end of ram cylinder, insert a 5/16-inch diameter rod through oil port (remove flow control valve if not removed with connector) and push piston from bore.

Carefully inspect piston and cylinder bore for scoring or other defect and if piston and cylinder are serviceable, install new piston rings as follows: Soak leather back-up ring in light oil for ½-hour prior to installation, then carefully install ring on piston with rough side towards closed (front) end of piston. Install rubber "O" ring at front (rough) side of back-up ring and make sure both rings are fully seated in groove. Lubricate piston with oil and carefully work piston, closed end first, into cylinder to avoid damage to rings.

If necessary to remove cylinder, first remove rockshaft and right hand support as outlined in paragraph 215. With connector (1) or three-way remote valve removed from front end of cylinder, use block of wood to bump cylinder rearward out of axle housing. If standard 3.125-3.127 cylinder bore is scored, it may be reamed or honed to 0.020 oversize and a new 0.020 oversize piston installed. Cylinder bore must be finish honed; otherwise, rapid wear of piston sealing rings will result.

Install cylinder using new gasket by reversing removal procedure. Readjust control valve linkage as outlined in paragraph 202.

## AUTOMATIC HOLD MECHANISM

### Models 880 Implematic And 990 Implematic

217. Exploded view of automatic hold mechanism is shown in Fig. 160. Fig. 161 illustrates operation of the mechanism; as rockshaft (A) turns to fully raised position, pin (F) on striker arm (E) engages notch in trip lever (H) which pivots on pin (J) to snap spring loaded toggle (K) overcenter. As the trip lever moves to overcenter position, linkage connected to trip lever opens valve (M) which unloads the hydraulic pump. When override lever (C) is pulled out to detent position, pins (B) are disengaged from end of rockshaft and the automatic hold mechanism becomes inoperative. Refer to Fig. 162 for view of linkage which connects automatic hold mechanism to pump control valve arm.

Disassembly and reassembly of the automatic hold mechanism is evident on inspection of unit and with reference to Figs. 160 through 163. To renew housing (4—Fig. 160) it will be necessary to remove the rockshaft and housing unit as outlined in paragraph 215, then separate housing from rockshaft. After reassembly, adjust linkage as outlined in paragraph 202.

## DRAFT SENSING TOP LINK ASSEMBLY

### Models 880 Implematic and 990 Implematic

218. **SINGLE ACTING TOP LINK.** Early models 880 and 990 with Imple-

1. Connector
2. Plug
3. "O" ring
4. Bleeder plug
5. "O" ring
6. Ram cylinder
7. Piston rings ("O" ring & leather back-up ring)
8. Ram cylinder arm
9. "O" ring
10. Rockshaft
11. Pin (see 6—Fig. 160)
12. Half bushing
13. Ram cylinder cover
14. Steel (needle roller) pins
15. Lift latch lever
16. Snap ring
17. Guide screw
18. "O" ring
19. Spring
20. Lift latch plunger
21. Spring pin
22. Connecting rod
23. Piston
24. Rockshaft bushing
25. Plug
26. Gasket
27. Snap ring
28. Flow control valve
29. Flow control valve spring
30. Flow control valve sleeve
31. "O" ring

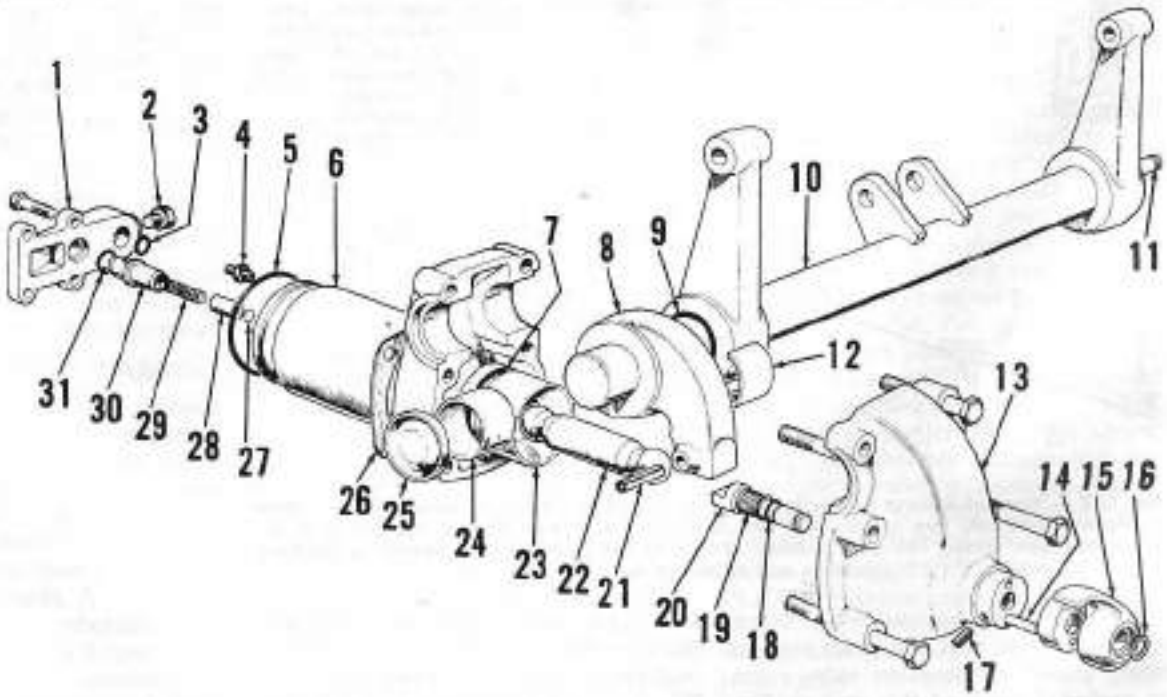


**Fig. 159 — Exploded view of ram cylinder assembly with rockshaft. Latch (20) locks rockshaft is fully raised position. Pin (11) in right end of rockshaft (10) is pivot pin for automatic hold mechanism; see item 6, Fig. 160. Rockshaft is supported in renewable bushings (12 and 24 shown above and 2—Fig. 160).**

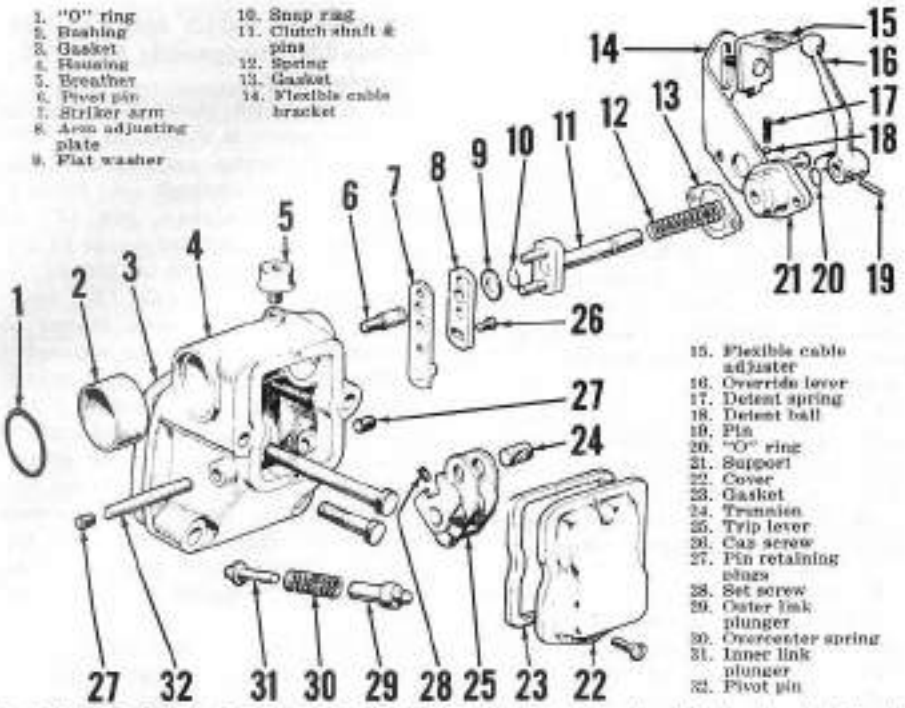


**Fig. 160 — Exploded view of automatic hold mechanism. Housing (4) is also right hand support for rockshaft; rockshaft bushing is (2). Pivot pin is pressed into right end of rockshaft (see 11—Fig. 159).**

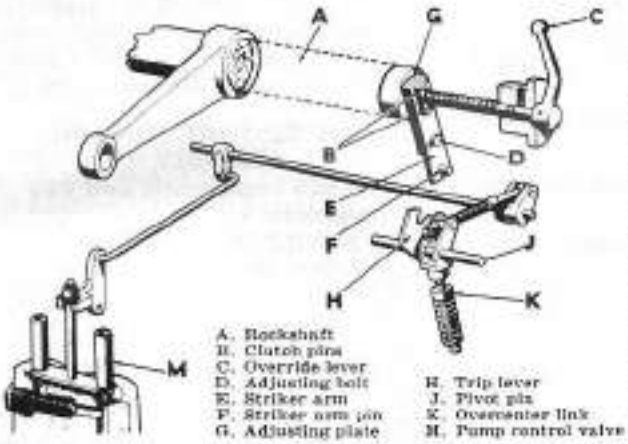


**Fig. 161—Schematic view of automatic hold mechanism; refer to Fig. 160 for exploded view. As rockshaft (A) reaches fully raised position, pin (F) in striker arm engages notch in trip lever (H) which moves spring loaded link (K) overcenter and through linkage, opens pump control valve (M). Moving override lever (C) out of detent position disengages clutch pins (B) making mechanism inoperative. Refer also to Fig. 163.**

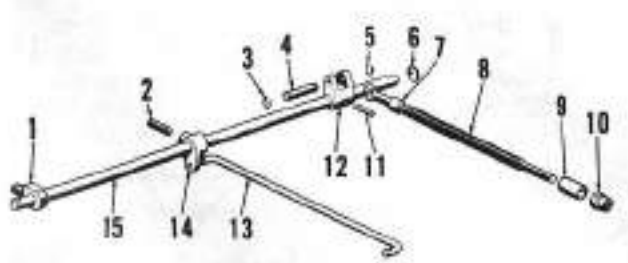


**Fig. 162 — View of linkage connecting automatic hold trip lever to pump control valve operating bellcrank. Two spacers (9) are used instead of one shown; one spacer is located between spring (8) and trunnion (24—Fig. 160) and second spacer is between trunnion and adjusting nut (10).**

matic hydraulic system were fitted with a top link that was draft sensing when under compression only; refer to exploded view of this unit in Fig. 164. To disassemble unit, drive the roll pins (1 & 2) from end of threaded shaft (10); the shaft, spacer (13) and draft control spring (14) can then be withdrawn from end assembly (3). When reassembling, be sure to install the inner spring pin (1) with split side opposite split side of outer pin

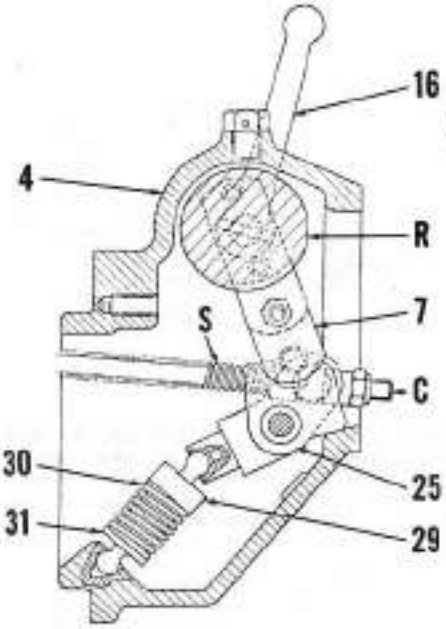

**Fig. 163 — View showing trip lever (25) and overcenter spring loaded link (29, 30 & 31) installation. Refer also to Figs. 160, 161 and 162.**

C. Connecting rod
R. Rockshaft
S. Spring
4. Housing
7. Striker arm
16. Override lever
25. Trip lever
29. Outer link plunger
30. Overcenter spring
31. Inner link plunger

(2). Adjust the assembly as outlined in paragraph 203.

219. **DOUBLE ACTING TOP LINK.** Fig. 165 shows exploded view of late Implematic top link that is draft sensitive when under both tension and compression. Turnbuckle (9—Fig. 164) and threaded rear end assembly (8) for both the single and double acting top links as well as the flexible control cable (4, 5 & 6) are identical.

To unscrew the spring adjusting nut (15—Fig. 165), first loosen or remove set screw that locks nut in position on end housing (3A). Inner spring pin (1) must be installed inside outer pin (2) so that split sides of pin are away from each other. Adjust top link and flexible control cable as outlined in paragraph 204.

## HYDRAULIC LINES AND FILTER

### Models 880 Implematic and 990 Implematic

220. Refer to Fig. 166 for exploded view of the hydraulic lines and inlet filter. Inlet filter screen (4) is accessible after removing plug (1) to drain the transmission, then removing cover (2). A magnetic ring (7) traps metal particles and should be cleaned each time the inlet filter is removed for cleaning. Suction pipe (24) extends from inlet filter into PTO housing where it is attached to bottom of hydraulic pump.

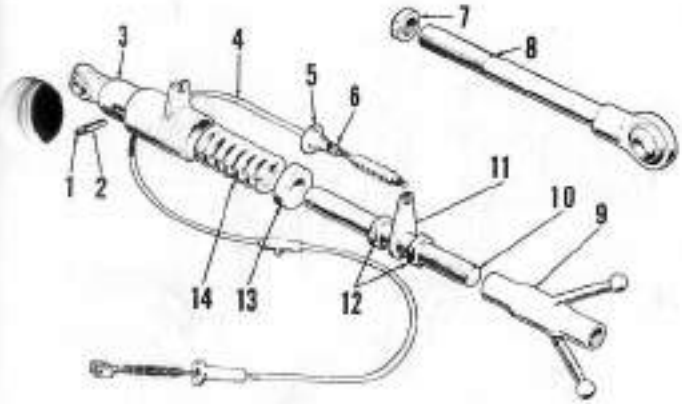


**Fig. 164 — Exploded view of early type single acting draft sensitive top link assembly; refer to Fig. 165 for components of later top link that is draft sensitive when under either tension or compression.**

1. Inner spring pin
2. Outer spring pin
3. End assembly
4. Flexible control cable
5. Cable adjuster
6. Lock nut
7. Nut
8. End assembly
9. Turnbuckle
10. Threaded shaft
11. Cable bracket
12. Nuts
13. Spacer
14. Draft control spring

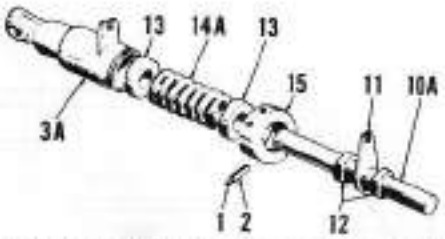


**Fig. 165 — Exploded view of front end assembly of double acting (draft sensitive under both tension and compression) top link.**

1. Inner spring pin
2. Outer spring pin
3A. Front end assembly
10A. Threaded shaft
11. Cable bracket
12. Nuts
13. Spacers
14A. Draft control spring
15. Adjusting nut

The transmission and PTO drive gears are lubricated by oil by-passed by the hydraulic pump valves; lubrication pipe (20) is attached to pump valve body.

Pressure line (13) to rockshaft ram cylinder and pressure line (19) to control valve body are connected to pressure outlet of pump at "T" connector (25).

**Fig. 166 — Exploded view of implematic hydraulic lines and suction filter.**

1. Drain plug
2. Filter cover
3. Screw
4. Suction screen
5. "O" ring
6. Spacer
7. Magnet
8. Shoulder washer
9. Transmission lubrication pipe (6-speed)
10. Transmission lubrication pipe (12-speed)
11. Clamping plate
12. "O" ring
13. Ram cylinder pressure pipe
14. Lubrication pipe (12-speed trans.)
15. Special nut
16. Special union
17. Sealing washers
18. Banjo bolt
19. Pressure pipe to control valve

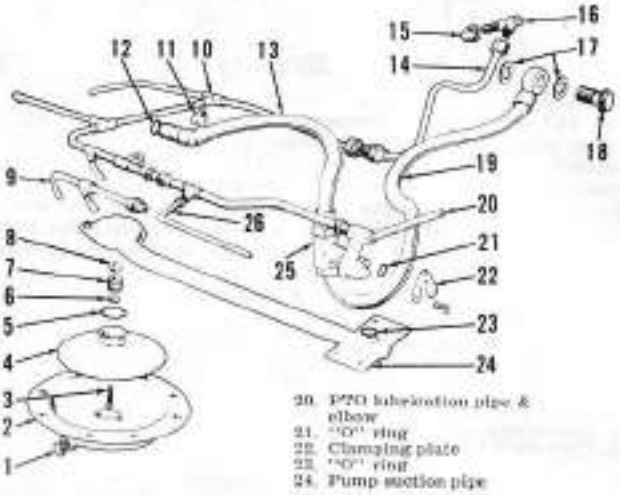


20. PTO lubrication pipe & elbow
21. "O" ring
22. Clamping plate
23. "O" ring
24. Pump suction pipe

# SELECTAMATIC HYDRAULIC SYSTEM

The Selectamatic hydraulic system incorporates four types of hydraulic control; depth (draft) control, height (position) control, traction control (T.C.U.) and control of remote external hydraulic cylinders. Hydraulic power is supplied by a front mounted, crankshaft driven pump on model 1200, and by a pump mounted in PTO housing and driven from PTO gear input shaft on all other models.

For explanation of system operation, refer to the following paragraphs 221 through 224. Schematic diagram of the system is shown in Fig. 167 and Figs. 168, 169 and 170 show views of the hydraulic system controls. NOTE: To move selector dial (B—Fig. 168) to different position, the control lever (A) must be held fully rearward against spring pressure.

## HYDRAULIC SYSTEM OPERATING PRINCIPLES

### All Selectamatic Models

221. **DEPTH (DRAFT) CONTROL.** Depth control is used to maintain desired operating depth of implement when operating ground engaging implements not equipped with gage wheels.

For depth control operation, selector dial is set at position shown at B1 in Fig. 169. This moves the rocker lever (20—Fig. 167) to position shown in schematic view so that rear end of lever is under push rod (24) and front end contacts spool valve (15); lever then pivots on control lever cam (28). Moving control lever rearward to contact, but not compress, return spring (position A—Fig. 169) places spool valve in raising position. Moving control lever forward as shown by dotted arrow in Fig. 169 lowers the implement until force transmitted by top link of the 3-point hitch compresses draft control spring (23—Fig. 167) and moves spool valve to hold position. The farther forward that control lever is moved, the greater the force required on draft control spring to return valve spool to hold position. Thus, deeper penetration of implement is obtained by moving control lever forward. Guides (C—Fig. 169) may be set to desired position so that implement can be returned to same depth after being raised from ground.

222. **HEIGHT (POSITION) CONTROL.** Height control is used where lift linkage is required to be maintained in a certain position.

For height control, selector dial is set at position shown at B2 in Fig. 169. This positions rear end of rocker lever (20—Fig. 167) under rockshaft push rod (22) and front end of rocker lever against spool valve (15); lever pivots on control lever cam (28). When control lever is moved to position "A" shown in Fig. 169, spool valve is placed in raise position until rockshaft turns, forcing push rod (22) downward and returning spool valve to hold position. Moving control lever forward places spool valve in lowering position, then linkage will lower until rockshaft push rod is lifted, returning spool valve to hold position. Thus, for any position of control lever within range shown by dotted arrow in Fig. 169, the lift linkage will be moved to a relative position. When control lever is fully forward, lift linkage will be fully lowered.

223. **TRACTION CONTROL (T.C.U.).** Traction control is used with implements equipped with gage wheels and provides for transfer of implement weight to tractor rear wheels for increased traction.

For traction control, selector dial is set at T.C.U. position (B3—Fig. 170).

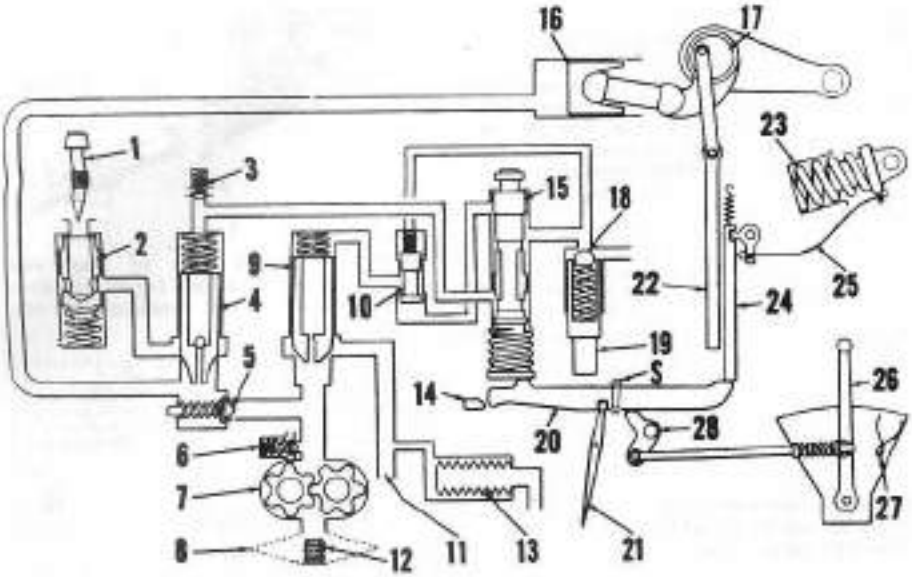


**Fig. 167 — Schematic diagram of "Selectamatic" hydraulic system. Selector lever (21) moves rocker arm (20) to different positions for depth (draft) control, height (position) control or for traction control (T.C.U.). Traction control position is also used for operating external ram cylinder. Rocker arm (20) is shown in depth control position. Note that though selector lever actually moves rocker arm sideways, it is shown in the schematic view that rocker arm is moved endways; this is for simplification of diagram only. Some later models use full flow suction filter instead of by-pass filter (13).**

1. Lowering rate adjuster
2. Flow control valve
3. Cylinder relief (safety) valve
4. Hold valve plunger
5. Non-return (check) valve
6. Pump relief valve
7. Hydraulic filter
8. Suction screen filter
9. By-pass valve plunger
10. Latching valve plunger
11. Lubrication pipe
12. Magnetic filter
13. By-pass filter (not all models)
14. Abutment plate
15. Spool valve
16. Ram cylinder
17. Ram cylinder rockshaft
18. Traction control valve ball
19. Traction control valve plunger
20. Rocker lever
21. Selector dial
22. Height control pushrod
23. Sensing unit
24. Depth control pushrod
25. Depth (draft) sensing cable
26. Control lever
27. Lever return spring
28. Control lever cam

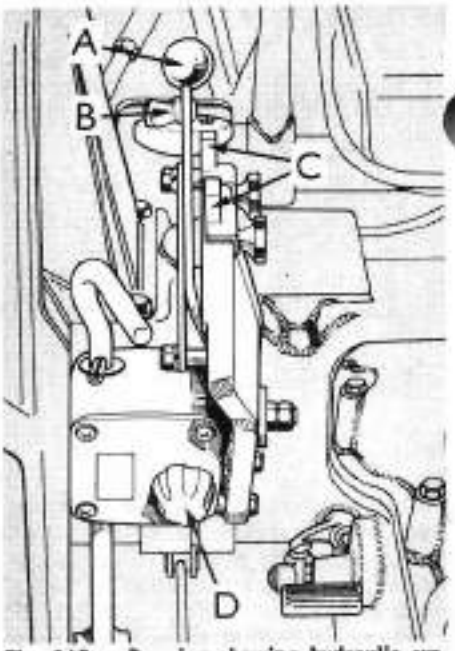


**Fig. 168 — Drawing showing hydraulic system controls. Refer also to Fig. 169 and 170.**

A. Control lever
B. Selector dial
C. Control lever stop guides
D. Rate of lowering adjustment

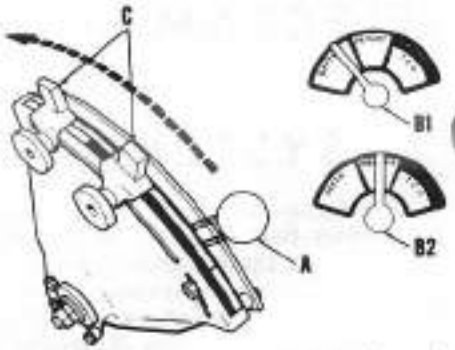


**Fig. 169 — Control lever (A) is shown in lift position for both depth and height control. Dotted line shows range of implement depth variation when selector dial is set for depth control (B1) or range of lift arm height variation when selector dial is set for height control (B2). Lever position guides are (C).**

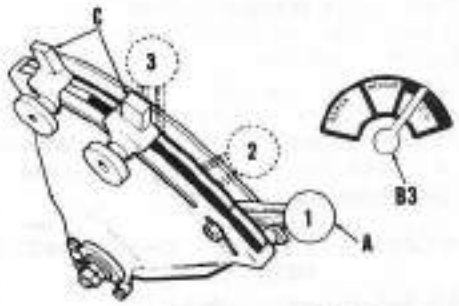


**Fig. 170 — When selector dial is set at T.C.U./external position (B3), control lever must be pulled rearward against spring pressure to position (1) to raise lift linkage or pressurize external cylinder. When released, control lever will return to hold position (2). Minimum traction control pressure is obtained with lever approximately as shown at (3).**

This moves rocker lever (20—Fig. 167) so that front end of lever rests on abutment plate (14), screw (S) in lever is below traction control valve and rear end of lever is moved away from both the depth control push rod (24) and height control push rod (22). Lever then pivots on abutment plate and is controlled only by the control lever cam (28). Moving control lever fully rearward to a position (1—Fig. 170) compressing quadrant spring (27—Fig. 167) places control valve spool in raising position. When lift linkage is raised and the control lever released, quadrant spring will return the lever and spool valve to hold position. Moving lever forward from hold position (2—Fig. 170) will place spool valve in lowering position. To locate minimum traction control position (3) of control lever, lower the lift linkage and without any weight or implement on linkage, slowly move control lever forward from lowering position. When control lever reaches position where lift arms just start to raise, move upper guide (C) to this position. Moving control lever forward from minimum traction control position will increase traction control pressure as the screw in rocker lever is pushing upward against traction control valve plunger (19). Maximum traction control pressure is with control lever fully forward. Position for proper traction control pressure can be determined only with implement in working position in ground and with tractor moving at desired speed; when this position is found, move lower guide (C) in alignment with lever so that lever may be returned to proper position after lifting implement at end of field.

224. **EXTERNAL (REMOTE CYLINDER) CONTROL.** For operating single acting remote cylinders, selector dial is set at T.C.U. position and control lever is used in raising and lowering position. Fluid pressure is directed to remote cylinder instead of rockshaft ram cylinder by means of a three-way valve shown in Figs. 216 and 217.

A remote control valve (refer to paragraph 264) for operating remote cylinders independently from lift control system is available for most models.

## FLUID CONTROL VALVES

### All Selectamatic Models

225. **PUMP RELIEF VALVE.** The pump relief valve (6—Fig. 167) is

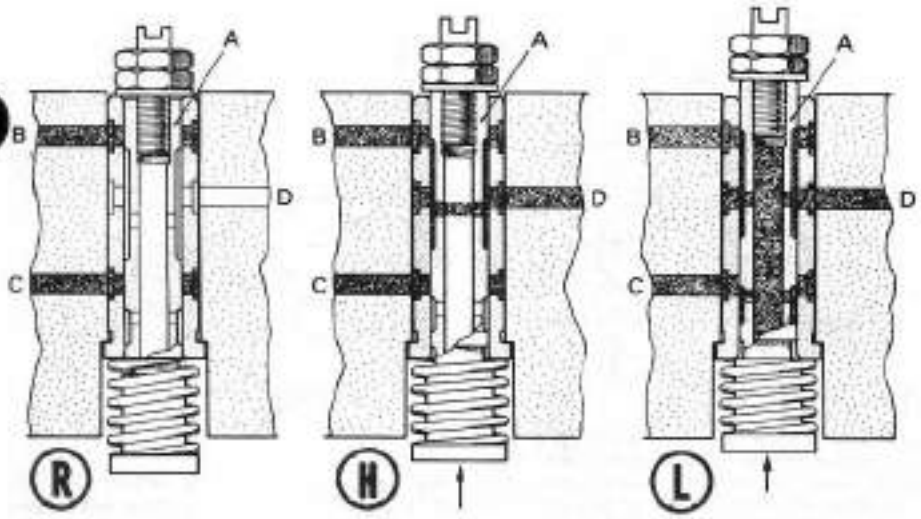


Fig. 171 — Views showing control valve spool (A) in raise (R), hold (H) and lower (L) positions. In raise position, passages (B & C) from hold and by-pass valves are blocked, closing the valves (see Figs. 172 & 173). In hold position, passage (B) from by-pass valve is open, allowing by-pass valve plunger to open and unload hydraulic pump; hold valve passage (C) remains blocked, holding hold valve closed and retaining fluid in ram cylinder. When in lowering position, both passages (B & C) are open allowing fluid in ram cylinder to return to sump. Spool valve discharge passage is (D). Refer also to Fig. 167.

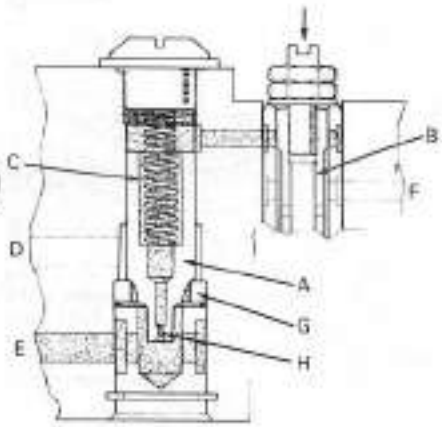


Fig. 172 — View showing pressure balanced valve operation. With spool valve (B) blocking passage from top side of valve plunger (A), pressure above valve is maintained via orifice (H) to same pressure as below valve in passage (E), thus spring (C) holds plunger on seat (G) closing outlet passage (D).

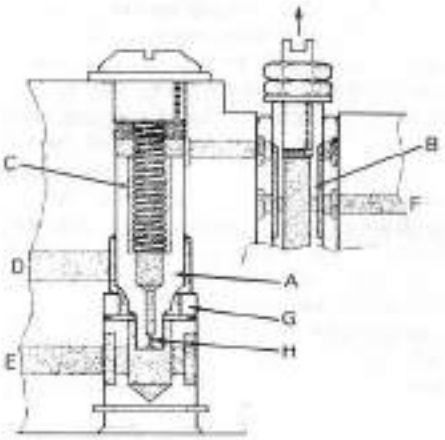


Fig. 173 — View showing pressure balanced valve operation. With spool valve (B) passage (F) open, fluid pressure above valve is lowered as flow through metering hole (H) is not sufficient to overcome loss through open spool valve. Thus, pressure in passage below valve pushes plunger (A) away from seat (G) allowing oil to flow out passage (D). Fluid flowing through metering hole flows out through passage (F).

mounted on pump cover plate and is factory adjusted, then sealed, to open at 2000 psi.

226. **CONTROL (SPOOL) VALVE.** The spool valve (15—Fig. 167) is located in control valve housing and handles only the fluid flow required to operate the pressure balanced hold and by-pass valves described in following paragraph 227. Refer to Fig. 171 for views showing spool valve in raise (R), hold (H) and lower (L) positions. In raise position, the spool valve blocks passages from both the by-pass and hold valves, retaining these valves in closed position. In hold position, spool valve blocks passage from hold valve, retaining this valve closed, but opens passage from by-pass valve, allowing by-pass valve to direct fluid from pump to lubrication circuit. In lowering position, both the passages from hold and by-pass valves are open, allowing fluid in rockshaft ram cylinder to return to sump and also by-passing fluid from pump to lubrication circuit.

227. **HOLD AND BY-PASS (PRESSURE BALANCED) VALVES.** The by-pass valve (9—Fig. 167) controls flow to hydraulic fluid from pump, directing the flow to rockshaft cylinder when necessary to raise lift linkage and directing flow to lubrication circuit at all other times. The hold valve (4) retains fluid in rockshaft cylinder until necessary to lower the lift linkage, then opens to allow fluid in cylinder to return to sump. Refer to Fig. 172 and Fig. 173 for flow diagram of pressure balanced valve unit typical of both the hold and by-pass valves.

228. **LATCHING VALVE.** The latching valve (10—Fig. 167) is interposed in the passage between the by-pass valve (9) and the spool valve (15). When lift arms are in raised position and weighted with implement, any leakage in ram cylinder circuit will allow linkage to lower slowly and gradually place spool valve in raising position. The latching valve will then snap closed, providing a sharp response of by-pass valve.

229. **TRACTION CONTROL (T.C.U.) VALVE.** The spring loaded traction control valve ball (18—Fig. 167) is used to increase the back pressure on the hold and by-pass valves, thus causing a low pressure rise in ram cylinder circuit. This provides a light lifting pressure on ground engaging implements, adding weight to tractor rear wheels and increasing traction. Traction control lifting pressure is regulated by movement of the spring plunger (19); plunger is actuated by screw in rocker lever contacting plunger when dial selector is moved to forward part of quadrant.

230. **HOLD (RAM CYLINDER SAFETY) RELIEF VALVE.** The hold relief valve (3—Fig. 167) is adjusted to open at 2500 psi, thus allowing hold valve (4) to open whenever pressure in ram cylinder circuit exceeds this relief pressure. Very high hydraulic pressure in the ram cylinder circuit could occur from shock loads imposed by heavy implements; however, the hold relief valve prevents these pressures from exceeding that which could cause damage to the ram cylinder or related parts.

231. **RATE OF LOWERING VALVE.** The rate of lowering valve (2—Fig. 167) is a flow control valve regulated by opening or closing needle valve (1), thus regulating the flow of oil returning from ram cylinder to sump. The rate of lowering of lift linkage can then be controlled to desired speed, regardless of implement weight.

232. **NON-RETURN (CHECK) VALVE.** The non-return valve (5—Fig. 167) prevents oil in ram cylinder from returning to pump outlet passage when hold valve (4) is closed and by-pass valve (9) is open.

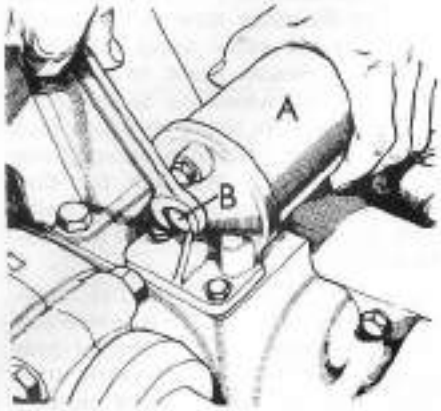


Fig. 174 — Removing by-pass filter housing (A) by unscrewing bolt (B). On later models with by-pass filter, filter base is mounted as an oil return block for external cylinders rather than being bolted directly to axle housing as shown.

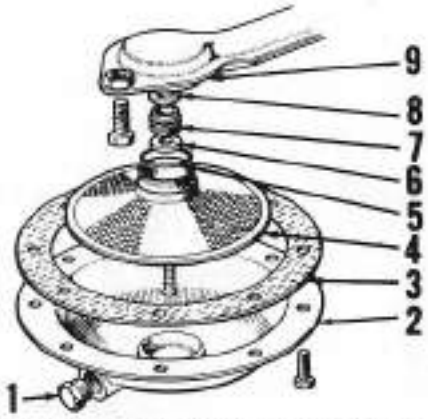


Fig. 175 — View showing early type suction screen, cover and magnetic filter; refer to Fig. 176 for late models using full flow filter element instead of by-pass filter as shown in Fig. 174.

1. Drain plug
2. Cover
3. Gasket
4. Suction screen
5. "O" ring
6. Spacer washer
7. Magnetic filter
8. Spacer washer
9. Pump intake tube

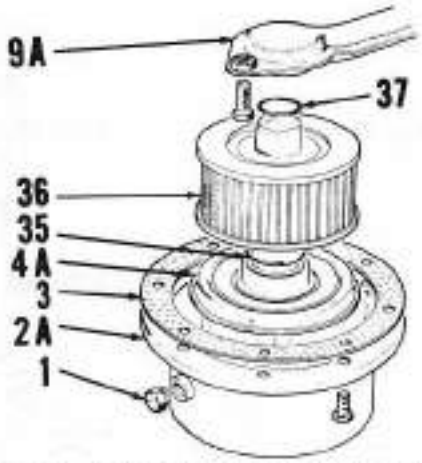


Fig. 176 — Exploded view of late type full flow pump intake filter, suction screen and cover. Refer to Fig. 175 for earlier type unit used with by-pass type filter.

1. Drain plug
2A. Cover
3. Gasket
4A. Suction filter
35. "O" ring
36. Filter element
37. "O" ring
9A. Pump intake tube

## HYDRAULIC FLUID

### All Selectamatic Models

234. Transmission lubricating oil is utilized for the hydraulic system fluid. Recommended lubricant is SAE 20W-30 or SAE 20W-40 motor oil. To coincide with alternate service intervals of the hydraulic system filters as outlined in paragraph 235, lubricant should be discarded after 1000 hours of use and the system refilled with new clean oil.

Refill capacity is 24 quarts for all models except model 1200. On early model 1200, refill capacity was 38 quarts; however, capacity was changed to 43 quarts by changing length of dipstick sleeve. On model 1200 prior to serial No. 705026, a new sleeve (part No. 923725) may be installed to raise dipstick so that full mark will indicate the increased capacity.

CAUTION: On model 1200, air will be admitted to suction side of hydraulic pump when transmission oil is drained. If control lever is in "raise" position when engine is restarted, pump may fail to prime and become damaged due to oil starvation. **Be sure** to place model 1200 hydraulic control lever in forward (lowering) position before restarting engine after refilling transmission. When engine is restarted, run at minimum idling speed for ½-minute, then move control lever to "raise" position. If no response is noted, stop engine, return lever to "lower" position and loosen pressure line connections between pump and relief valve(s). Restart engine and tighten the connections when oil starts to flow, then recheck to be sure hydraulic lift is operative.

## HYDRAULIC SYSTEM FILTERS

### All Selectamatic Models

235. The transmission lubricant should be drained and the suction screen, magnetic filter and control valve by-pass plunger screen cleaned and the paper filter element renewed after each 500 hours of operation. After 1000 hours of use, the transmission oil should be discarded and system refilled with new oil; refer to paragraph 234. Oil with 500 hours use may be reused providing that it is drained into a clean container, allowed to settle and when being poured back into transmission, the last gallon in container retained so that any foreign material settled to bottom will not be returned to transmission. Add new oil to bring level to full mark on dipstick.

On early models 770, 880 and 990 with by-pass type filter (see Fig. 174), remove suction screen cover (2—Fig. 175), screen (4) and magnet (7). Clean the screen in kerosene, allow kerosene to drain off and wipe magnet free of any adhering particles. Reinstall screen, magnet and cover and renew the by-pass filter element (Fig. 174). Refill system with oil.

On models 780, 3800 and 4600, and late models 770, 880 and 990 with full flow filter (Fig. 176), filter element should be renewed as suction screen (4A) and magnet (attached to cover) are cleaned. A warning light on instrument panel indicates low pressure in pump suction tube (9A), thus indicating a clogged filter element (36). Note: The oil filter warning light may come on when transmission oil is cold or when engine is operating at speeds above 1800 RPM; however, this does not indicate that filter is plugged. Filter should be renewed if light comes on when transmission oil is at

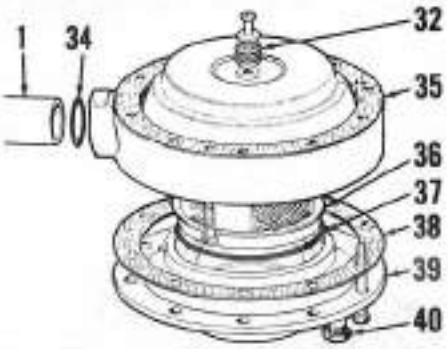


Fig. 177 — Exploded view of pump suction screen, housing and cover for model 1200 with dual pump and early model 1200 with single pump. On late model 1200 with single pump, a full flow element similar to that shown in Fig. 176 is incorporated into the assembly.

1. Pump intake tube
32. Magnetic filter
34. "O" ring
35. Housing
36. Suction screen
37. "O" ring
38. Gasket
39. Cover
40. Drain plug

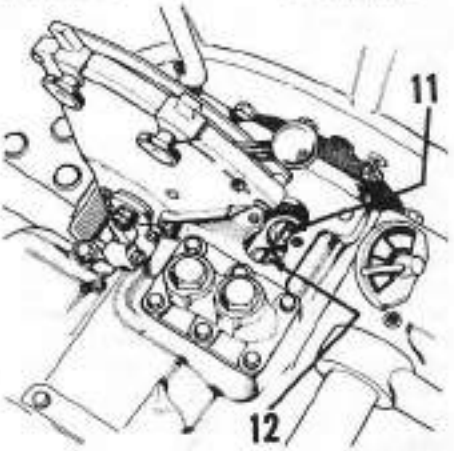


Fig. 178 — To clean nylon screen in by-pass valve plunger, remove plug (11) and withdraw the spring and by-pass plunger assembly. For exploded view of by-pass plunger, refer to items 5, 6, 7 and 8 in Fig. 198. Hold valve plunger retaining plug is (12).

operating temperature and engine is operating at speeds below 1800 RPM, regardless of time interval since filter element was last renewed.

On model 1200 with dual hydraulic pump and on early model 1200 with single hydraulic pump, a by-pass type filter (Fig. 174) and suction screen and magnetic filter (Fig. 177) are used. On late model 1200 with single pump, a full flow filter element similar to that shown in Fig. 176 is incorporated with the suction screen and cover assembly. On model 1200 with full flow filter, a warning light as described in previous paragraph for other models is used to indicate a clogged filter element.

On all models, clean the nylon screen in control valve by-pass plunger as follows: Refer to Fig. 178 and remove cover plate or dump valve from axle housing, exposing the control valve plugs (11 & 12). Remove by-pass valve plug (11) and remove spring and valve plunger; refer to Fig. 198 showing exploded view of control valve. Unscrew plug from inside plunger and remove the orifice washer and nylon screen. Clean the orifice and screen using compressed air, then reinstall screen, orifice washer and retaining plug. Install valve plunger, spring and plug (11) using new gasket. Reinstall cover plate or dump valve.

## TROUBLE SHOOTING

### All Selectamatic Models

236. When trouble shooting problems encountered with Selectamatic hydraulic system, refer first to paragraphs 221 through 235 to be sure problem is not with misunderstanding the operation of the system or is not caused by improper maintenance. With knowledge of how the system should operate, refer to the following list of malfunctions and possible causes as an aid in locating source of trouble:

A. FAILURE TO LIFT UNDER ALL CONDITIONS; PUMP IS QUIET. Could be caused by:

1. By-pass valve plug seal leaking, valve plunger stuck open or plunger orifice plugged.
2. Hold valve plug seal leaking, hold valve plunger stuck open, plunger orifice plugged or hold relief (cylinder safety) valve is faulty.
3. Faulty pump relief valve.
4. Faulty hydraulic pump.
5. Pump drive failure.
6. Faulty "O" ring seals or ruptured high pressure pipe.

B. FAILURE TO LIFT UNDER ALL CONDITIONS; PUMP IS NOISY. Could be caused by:

1. Low oil level in transmission.
2. Pump suction filter is plugged.
3. Non-return (check) valve seat loose.

C. FAILURE TO LIFT EXCEPT WITH SELECTOR DIAL IN TRACTION CONTROL (T.C.U.) POSITION. Could be caused by:

1. Faulty depth/height control linkage.
2. Spool valve stuck in open (lower) position; will lift light load with control lever fully forward to maximum traction control position.
3. Spool valve not properly adjusted; will lift light load when control lever is fully forward in maximum traction control position.

D. FAILURE TO LIFT UNDER LOAD. Could be caused by:

1. Faulty pump relief valve.
2. Faulty or worn hydraulic pump.
3. Faulty "O" ring seals on high pressure connections or on ram cylinder piston.
4. Faulty hold (cylinder safety) relief valve.

E. WILL NOT HOLD AFTER RAISING. Could be caused by:

1. Quadrant (control lever return) spring not properly adjusted.
2. Faulty sensing unit or depth control cable, or cable not properly adjusted.
3. Leaking sealing washer on hold valve plug.
4. Faulty hold (cylinder safety) relief valve.
5. Hold valve plunger sticking.
6. Ram cylinder piston seals leaking.
7. Faulty non-return (check) valve.
8. Leaking "O" ring seals at high pressure pipe connections or pipe leaking.

F. ERRATIC OR INCORRECT TRACTION CONTROL OPERATION. Could be caused by:

1. Sticking latching valve.
2. Hold plunger ball missing.
3. Incorrect control lever adjustment.
4. Incorrect setting of traction control adjusting screw in rocker lever.
5. Incorrect adjustment of traction control valve retainer.
6. Weak traction control valve spring.

G. ERRATIC OR INCORRECT DEPTH CONTROL. Could be caused by:

1. Incorrect adjustment of implement.
2. Loose control lever pivot.
3. Seized or incorrectly adjusted sensing cable.
4. Seized or faulty sensing unit.
5. Sticking hold valve or by-pass valve plungers.
6. Sticking latching valve.

H. LIFT LINKAGE LOWERS TOO SLOWLY. Could be caused by:

1. Lowering control not fully open.
2. Incorrect grade of transmission lubricant.
3. Incorrect control lever adjustment.
4. Hold valve plunger sticking.
5. Incorrectly adjusted traction control cable.
6. Incorrectly adjusted spool valve.
8. Flow control valve plunger sticking.

## SYSTEM CHECKS AND ADJUSTMENTS

### All Selectamatic Models

237. **HYDRAULIC PRESSURE CHECK.** Pump relief pressure on all models is 2000 psi. Method of checking pressure will depend upon model being serviced; refer to the following procedure.

237A. MODEL 770. Connect pressure gage to plug in the connector at front end of rockshaft ram cylinder (at front left side of axle housing) or to remote cylinder valve if so equipped. Pressurize the rockshaft cylinder by holding control lever fully rearward against spring pressure with selector lever set at "T.C.U." position. Observe gage reading with transmission oil at normal operating temperature and with engine running at 1800 RPM. If no pressure reading is observed, difficulty may be in faulty or sticking control valves. If gage pressure reading is below 2000 psi, remove top link sensing unit and observe pump relief valve through opening in PTO housing; if oil flow is noted from relief valve shield with gage pressure below 2000 psi, the relief valve is faulty and should be renewed.

238. MODELS, 780, 880, 990, 3800 & 4600. On these models, the pump relief valve can be checked directly as follows: Refer to Fig. 179, remove axle connection plate (C) and install a special plug (P) (David Brown tool No. 961977) as shown, then reinstall connection plate with sealing rings. Connect a 3000 psi hydraulic pressure gage (G), then start engine and observe gage reading. CAUTION: It is important that this test be carried out with engine running at slow idle speed only and with transmission oil temperature above 75° F. With top link sensing unit removed, it can be observed whether low pressure reading is due to faulty pressure relief

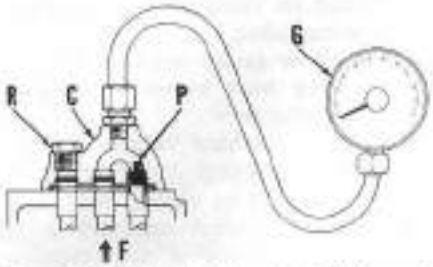


Fig. 179 — View showing installation of gage for checking hydraulic pump relief pressure on models 880, 990 and 4600. Axle cover plate (C) must be removed and a special plug (P) installed to block passage to control valve. Flow (F) is then closed except to gage (G). Return port (R) is for external hydraulic use.

valve or other failure. Renew relief valve if pressure is not approximately 2000 psi and oil is observed running from relief valve shield.

239. MODEL 1200. To directly check model 1200 hydraulic pump relief pressure, remove remote control valve cover plate (F—Fig. 180) and install test plate (David Brown tool No. 962234). Hydraulic pressure gage can then be connected to port in plate. Start engine and run at slow idle speed only; oil temperature must be above 75° F. Gage reading should then be 2000 psi. If gage reading is low, check relief valve (or valves) at bottom of transmission housing. If valves are hot or "buzzing", renew the relief valve. Low pressure gage reading with no noticeable by-pass through relief valve indicates faulty pump.

If test plate is not available, connect pressure gage to one of the remote control valve cylinder ports (A or B) and pressurize port by operating control lever (C). If control valve is not faulty, gage reading will be pump pressure. Note: Control valve lever will return to neutral position if not held to pressurize port.

240. **CHECK FOR RAM CYLINDER LEAKAGE.** If a 3-way control valve is installed at front end of rockshaft ram cylinder (left front side of axle housing), raise lift linkage with heavy implement attached, then close valve to ram cylinder. If linkage lowers with valve closed, ram cylinder seal rings are leaking.

On models not equipped with 3-way valve (except on model 1200), remove connector at front side of ram cylinder and install special connector with shut-off valve (David Brown tool No. 961821). With valve open, lift linkage with heavy implement attached, then close the valve; if linkage lowers, piston ring seals are faulty.

241. **BLEED HYDRAULIC SYSTEM.** To bleed the front mounted hydraulic

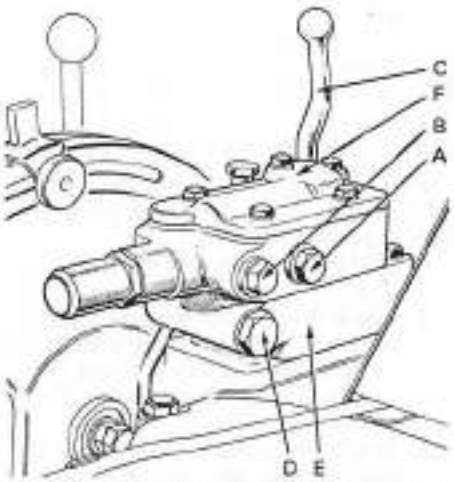


Fig. 180 — On model 1200, where special test plate which is installed in place of control valve cover (F) is not available, check pressure by connecting test gage to remote port (A or B) and pressurizing that port. Control lever must be held to keep it from returning to neutral when detent release pressure is reached. Plug (D) in adapter plate (E) seals external hydraulic return port.

pump on model 1200, refer to paragraph 234. To bleed the control valves and ram cylinder on all models, proceed as follows:

Remove plate from rear axle housing to expose the hold and by-pass valve plunger plugs (Q—Fig. 181). Start engine and, except on models 770 and 1200, loosen plug (P) in axle housing plate. Pull control lever fully rearward against spring pressure and hold in this position until oil free of any air bubbles runs from loosened plug, then push lever forward and tighten plug. On all models, loosen hold and by-pass valve plugs (Q) and pull control lever fully rearward against spring pressure until flow of bubble free oil is obtained, then push lever forward and tighten plugs. Loosen the ram cylinder bleed plug and again pull control lever fully rearward against spring pressure. When lift linkage is fully raised and bubble free oil is running from bleed screw, tighten the screw. Note that the ram cylinder bleed screw has the appearance of a grease fitting.

242. **EXTERNAL ADJUSTMENTS.** The control lever and the sensing unit cable can be adjusted without disassembly of any unit; refer to following paragraphs 243 and 244.

243. CONTROL LEVER ADJUSTMENT. The control lever should move without binding, yet have sufficient tension to hold a set position without moving due to vibration. To adjust control lever tension, loosen the pivot nuts (U—Fig. 182), tighten inner nut

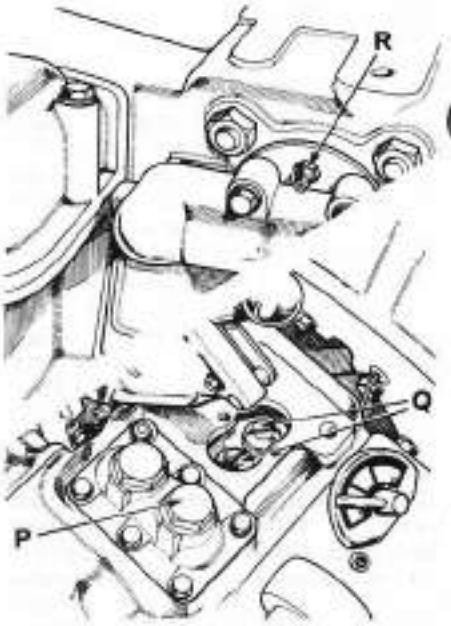


Fig. 181—Views showing bleeding points for hydraulic system; refer to text for procedure.

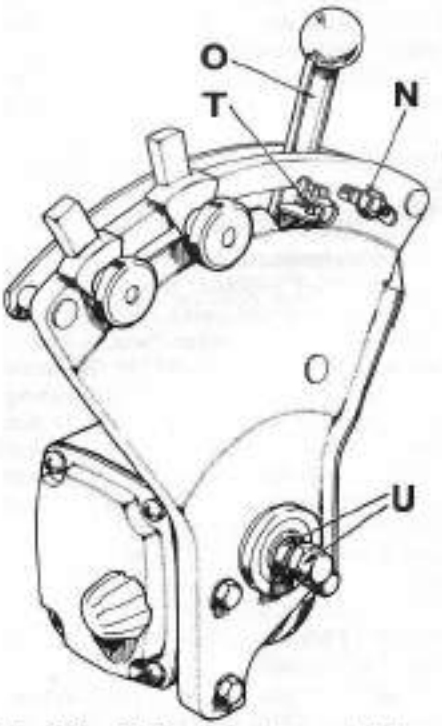


Fig. 182 — Hydraulic system control lever adjusting points; refer to text for procedure.

to desired tension, then hold inner nut while tightening outer nut.

To check adjustment of quadrant ("select" position return) spring (T), loosen spring carrier nut (N), move lever fully rearward and turn selector dial to "Height" position. Engage lift linkage latch, start engine and hold control lever fully rearward. When linkage is fully raised and relief valve

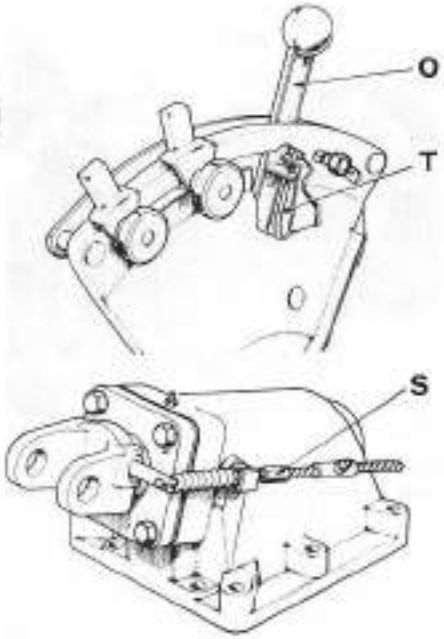


Fig. 183 — Adjusting points for top link sensing unit flexible cable; refer to text for procedure.

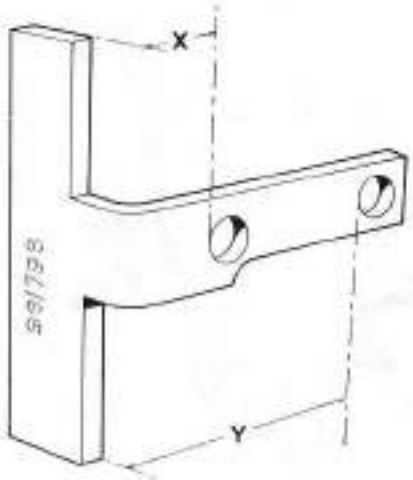


Fig. 184 — Adjusting gage (David Brown part No. 961796) for hydraulic control mechanism. Dimension "X" is 0.437; dimension "Y" is 1.580.

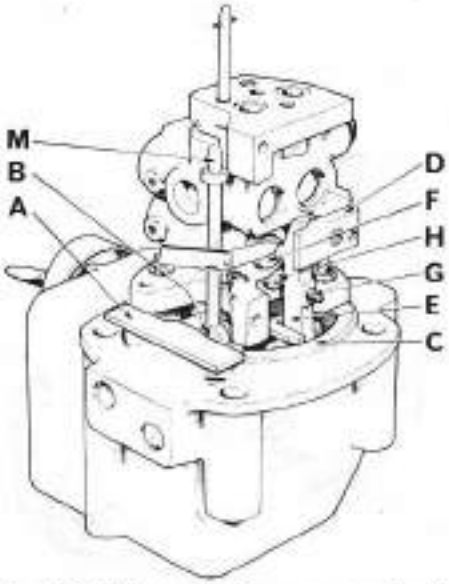


Fig. 185—Using adjusting gage to check setting of abutment plate (D): refer to text for procedure.

A. Adjusting gage
B. Rocker shaft
C. Bracket face
D. Abutment plate
E. Rocker lever
F. Spool valve
G. T.C.U. screw
H. T.C.U. valve
M. Connecting link

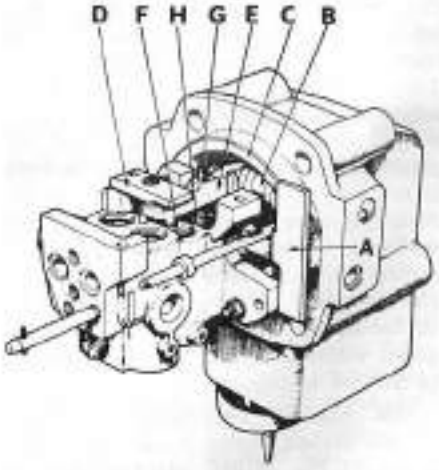


Fig. 186 — Using adjusting gage to check setting of traction control valve screw in rocker lever. Refer to text for procedure. Refer to Fig. 185 for legend.

opens, slowly move lever forward until pump unloads and relief valve stops making noise. Move the spring carrier forward until spring just touches, but does not move, the control lever, then tighten nut (N). As overheating of oil and wear of pump will occur if pump relief valve is in continuous operation, be sure relief valve operates only when control lever is held rearward against spring pressure and ceases to operate when control lever is released and spring moves lever forward. Readjust carrier if necessary.

244. ADJUST SENSING UNIT CABLE. On model 770 prior to serial No. 583396 (with single acting sensing unit), mount implement on 3-point hitch. With engine stopped, loosen lock nut and turn cable adjuster (S—Fig. 183) fully inward to be sure cable is slack. Move control lever (O) rearward until it contacts quadrant spring (T), start engine and allow linkage to raise to full height and reach hold position, then stop engine. With control lever still touching quadrant spring, screw adjuster (S) outward until linkage starts to creep downward, then turn adjuster back inward 1½ turns. Hold adjuster in this position and tighten locknut. If insufficient control lever movement is obtained when shallow plowing, increase setting from creep down position to 2½ turns.

On all other models with double acting sensing unit, adjust cable as follows: With weight on lower links and top link disconnected, place selector dial in "Depth" position. Loosen lock nut and turn adjuster (S) fully inward so that cable is slack. Move control lever (O) rearward until it contacts quadrant spring (T), start engine and allow lift linkage to raise fully and reach hold position, then stop engine. With control lever still touching quadrant spring, slowly turn adjuster out until linkage starts to creep downward, then turn adjuster back in 9¼ turns on models 770, 780, 880, 3800 and 4600, and 5¼ turns on models 990 and 1200. While holding adjuster in this position, retighten lock nut.

245. SYSTEM INTERNAL ADJUSTMENTS. When installing new control valve assembly or right rockshaft bracket on which the valve mounts, it will be necessary to adjust the abutment plate as outlined in paragraph 246 and the traction control (T.C.U.) valve as outlined in paragraph 247. Rockshaft cam is adjusted as outlined in paragraph 248 and connecting link nut as in paragraph 249. For adjustment of spool valve, traction control valve and hold relief valve, refer to paragraph 256.

246. SHIMMING ABUTMENT PLATE. To position the abutment plate when installing new control valve and/or rockshaft right bracket, proceed as follows:

After bolting control valve assembly to bracket, turn selector dial to T.C.U. position. Engage inner hole of adjusting gage (see Fig. 184) on rocker shaft pin (B—Fig. 185) and hold base of gage against boss on bracket as shown at A in Fig. 185. With abutment plate (D) tightly bolted in position, check clearance between rocker lever (E) and spool valve (F) with feeler gage. Clearance should be 0.001-0.003; if not, remove abutment plate and add or remove shims under plate as required to obtain proper clearance.

247. ADJUST TRACTION CONTROL VALVE ACTUATING SCREW. After adjusting abutment plate as outlined in paragraph 246, adjust traction control valve as follows:

With selector dial at T.C.U. position, engage outer hole of adjusting gage (Fig. 184) on rocker shaft pin (B—Fig. 185) and hold base of gage against boss on bracket as shown in Fig. 186. Loosen locknut on traction

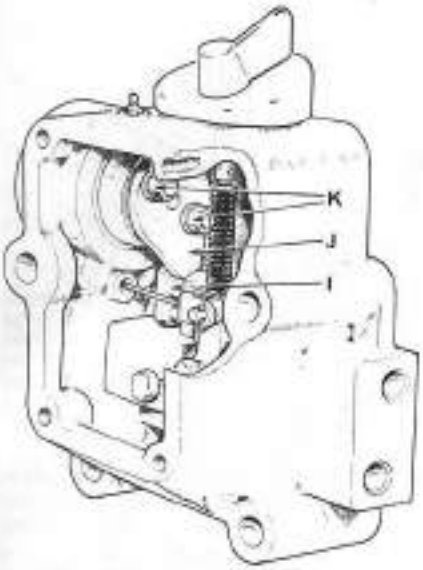


**Fig. 187 — Adjusting rocker shaft cam; refer to text for adjustment procedure and specifications.**

I. Push rod roller
J. Rockshaft cam
K. Cam retaining nuts

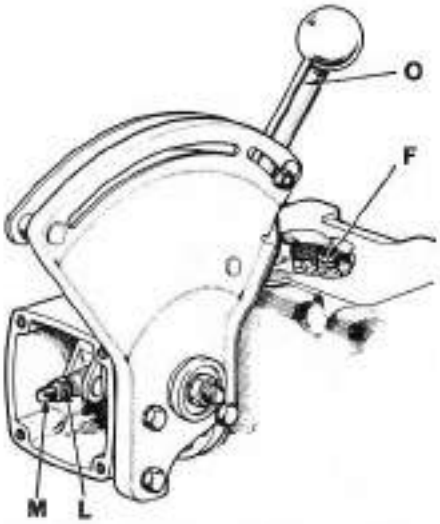


**Fig. 188 — Adjusting points for connecting rod nut (L); refer to text for adjusting procedure.**

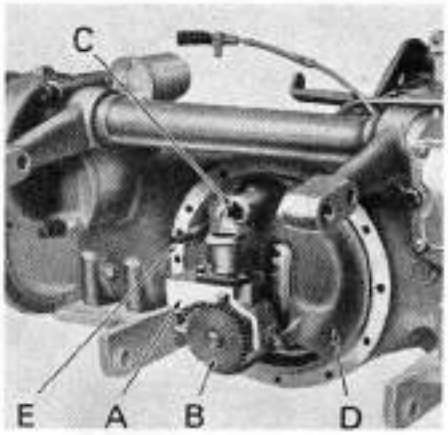


**Fig. 189 — View with PTO housing and gear assembly removed showing early type (Dowty) pump (A).**

A. Pump assembly
B. Pump drive gear
C. PTO cardan shaft
D. Pump mounting plate
E. Lubrication pipe

control screw (G) in rocker lever (E), then turn screw in or out until it just contacts traction control valve (H), but does not compress spring. On model 770, turn screw 1¼ turns further in; on all other models, turn screw one additional turn from where it just contacts valve. As point at which valve spring starts to compress is not easy to determine, adjustment should be done with assembly inverted and with a 0.002 thick feeler gage inserted between valve plunger and adjusting screw. When screw is turned in far enough to start holding feeler gage, withdraw gage and turn screw in farther as required.

248. ADJUST ROCKSHAFT CAM. On all models except model 770 prior to serial No. 583396, proceed as follows to adjust rockshaft cam:

With tractor and hydraulic system assembled, but with cover plate removed from right rockshaft support bracket, lift linkage by hand and engage locking latch to hold the linkage in raised position. Then, refer to Fig. 187 and check to see that push rod roller (I) is seated in cam indentation (J). If cam is not in this position, loosen nuts (K) and turn cam by inserting lever under end of rockshaft and holding push rod down against its spring until roller engages cam indentation, then retighten nuts and install cover plate.

249. ADJUST CONNECTING LINK NUT. With tractor and hydraulic system assembled, but with cover removed from front side of control lever housing and with axle housing plate or dumping valve removed to expose hold and by-pass valve plugs as shown in Fig. 188, proceed as follows:

With lift linkage in lowered position and engine not running, unscrew nut (L) until nut is flush with end of rod (M). Loosen quadrant spring carrier nut and move control lever to extreme rear position of quadrant. Place a small wrench or other spacer between control lever and rear quadrant guide, move the guide rearward to where it holds control lever fully rearward and tighten guide nut. Place finger on top of control valve spool (F), then switch selector dial back and forth between T.C.U. and Height control positions, noting that spool valve will lift each time selector dial is moved. Then, tighten nut (L) one turn at a time and recheck for spool valve movement, noting that spool valve movement will be reduced as nut is tightened. Continue to tighten nut until no spool valve movement can be noted as selector dial is moved from T.C.U. to Height control position, then back to T.C.U. position.

Later models have a plug at rear of axle housing cover plate so that a dial indicator may be used to detect spool valve movement. Position dial indicator so that plunger rests on top of valve spool, then proceed with adjustment as previously described. Dial indicator reading will be the same when selector dial is in either T.C.U. or Height control when adjustment of nut (L) is correct. Note that dial indicator needle may "flick" as selector dial is moved, but this is not an indication of spool valve mvement.

With connecting rod nut properly adjusted, reinstall cover plate on control lever housing and the plate or dump valve on axle housing. Readjust quadrant spring as outlined in paragraph 243.

## R&R AND OVERHAUL PUMP
### All Models Except 1200

250. To remove hydraulic pump, first remove PTO housing and gear assembly as outlined in paragraph 192. The pump and relief valve assembly can then be unbolted and removed from mounting plate; refer to Fig. 189. Two different makes of pumps have been used; refer to paragraph 251 for Dowty pump used on early models 770, 880 and 990, and to paragraph 252 for information on Plessey pump used on all later models.

251. **DOWTY PUMP.** Refer to Fig. 190 for exploded view of early type Dowty hydraulic pump assembly Later Dowty pumps were changed to incorporate pressure balanced inner bushings; see Fig. 192. Pumps with pressure balanced inner bushings have a different body requiring only one sealing "O" ring (18—Fig. 190) between pump and relief valve plate (17), whereas early Dowty pump requires two "O" rings (11 and 18). A later change incorporated a sealed pressure relief assembly that bolted directly to pump body; the sealed valve assembly can be installed on earlier pumps with pressure balanced inner bushings. Early and late type Dowty pumps are interchangeable as an assembly, providing the mating pressure relief valve and/or plate is also installed. Also, the complete pump, relief valve and gear assembly may be renewed using later type Plessey assembly (refer to paragraph 252).

To disassemble pump, remove nut (1—Fig. 190) and using suitable pullers, remove gear (2). Remove relief

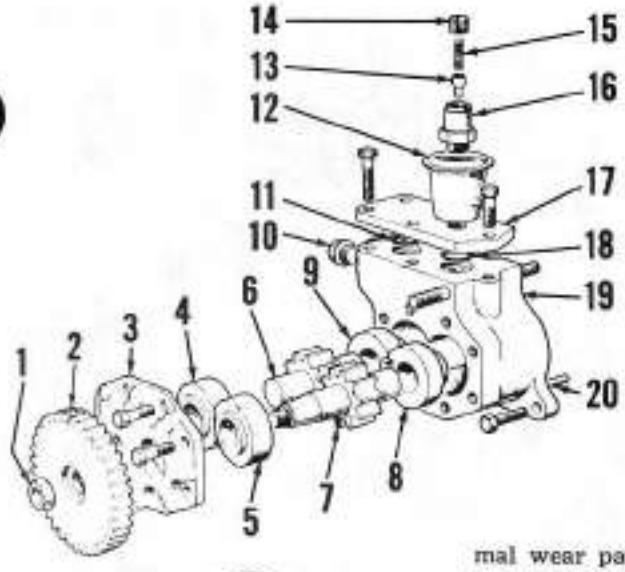


**Fig. 190 — Exploded view of early type (Dowty) hydraulic pump assembly. Later relief valve for Dowty pump bolted directly to pump body instead of using separate mounting plate (17).**

1. Gear retaining nut
2. Pump drive gear
3. Pump end plate
4. Bearing
5. Bearing
6. Idler rotor
7. Drive rotor
8. Bearing
9. Bearing
10. Plug
11. "O" ring
12. Shield
13. Valve plunger
14. Adjusting plug
15. Relief valve spring
16. Valve body
17. Valve mounting plate
18. "O" ring
19. Pump body
20. Locating dowel

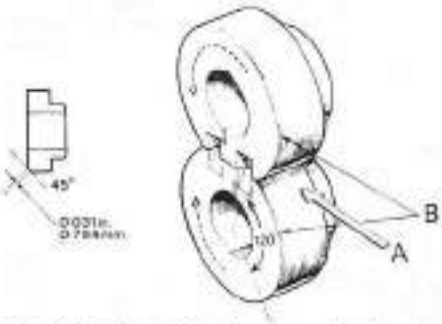


**Fig. 191—When installing new bearings in worn pump, inlet (A) side of inner bearings should be chamfered at (B) as shown in inset.**

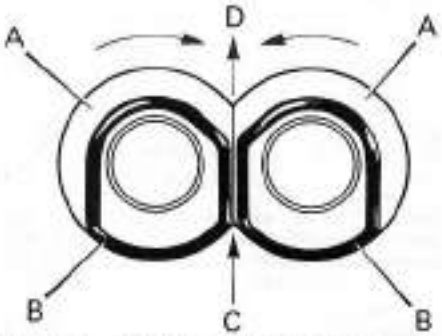


**Fig. 192 — "O" ring (B) installation on late Dowty pressure balanced bearings. Bearings must be installed with pressure area (A) to outlet (D) side of pump. Inlet side of pump is (C).**

valve plate (17) and/or the valve assembly. Remove bolts retaining cover (3) and remove cover. If the rotors (6 & 7) and bushings (4, 5, 8 & 9) will not slide out of body, tap body on wood block. Note location of bushings so they can be reinstalled in same position. Discard all "O" rings.

Thoroughly clean and inspect all parts. Examine inside of body for wear in gear track, especially at intake side of pump. The rotor teeth contact body at intake side and will produce a normal wear pattern, however the wear or scoring must not be excessive. Any burrs at edges of gear track should be removed to prevent interference to balancing action of bushings. If new bushings are being installed in used pump body, inner bushings should be chamfered as shown in Fig. 191. Usually, bushings should be renewed in sets of four; however, inner bushings and outer bushings are available in matched sets of two bushings.

When reassembling pump, coat inner bushing "O" rings with grease and lubricate all other parts with motor oil. On later type pumps with pressure balanced inner bushings, be sure the bushings and "O" rings are installed in correct position illustrated in Fig. 192. With cover resting on outer bushings, there should be at least 0.015 clearance between cover and pump body to produce sufficient pressure on inner bushing "O" rings. Tighten cover retaining bolts to a torque of 38-40 Ft.-Lbs. and gear retaining nut to a torque of 45 Ft.-Lbs. Be sure that pump can be turned by hand; there should be a steady drag on rotors without any binding or rough spots. Tighten relief valve or plate retaining cap screws to a torque of 25 Ft.-Lbs.

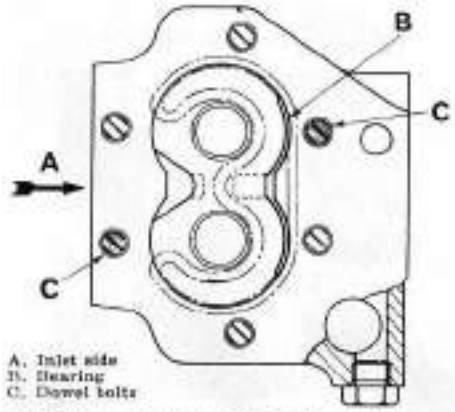


A. Inlet side
B. Bearing
C. Dowel bolts

**Fig. 194 — Cross-sectional view of Plessey hydraulic pump; refer to Fig. 193 for exploded view.**

252. **PLESSEY PUMP.** Exploded view of Plessey pump assembly is shown in Fig. 193. Note that the Plessey pump has a one-piece inner (10) and outer (7) bushing, whereas Dowty pump (see Fig. 190) is fitted with two-piece inner and outer bushings.

Before disassembling pump, scribe a mark across mounting plate, pump body and cover to aid in reassembly. Unscrew retaining nut and remove pump drive gear with suitable puller. Remove the bolts, nuts and washers retaining pump cover and mounting plate and separate mounting flange from pump body. Tap flange with mallet if difficult to remove. CAUTION: Do not attempt to pry the pump apart. Remove the "O" ring from mounting flange and, noting position of gears (rotors) and bushings in pump body, withdraw gears and bushings. Remove end cover from body and remove "O" ring from cover. Remove oil seal from end cover and blanking plug from pump body. Discard "O" rings and shaft seal as new rings and seal must be used on reassembly.

Carefully clean and inspect all parts. If bearings are not excessively worn, they may be lightly polished by lapping on O grade emery paper lubricated with kerosene; be sure emery

**Fig. 193—Exploded view of Plessey hydraulic pump assembly. Refer also to Fig. 194 for cross-sectional view of pump.**

1. Gear retaining nut
2. Tab washer
3. Drive gear
4. Oil seal
5. End plate
6. Sealing ring
7. Outer bearing
8. Idler rotor
9. Drive rotor
10. Inner bearing
11. Plug
12. Sealing ring
13. Relief valve assembly
14. "O" ring
15. Mounting (front end) plate
16. Pump body

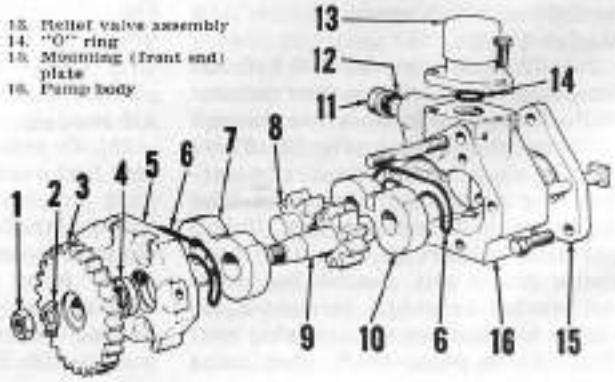

Fig. 195 — Model 1200 hydraulic pump (C) is accessible after removing grille and swinging battery tray outward. Oil cleaner is (B); battery tray latch is (A).

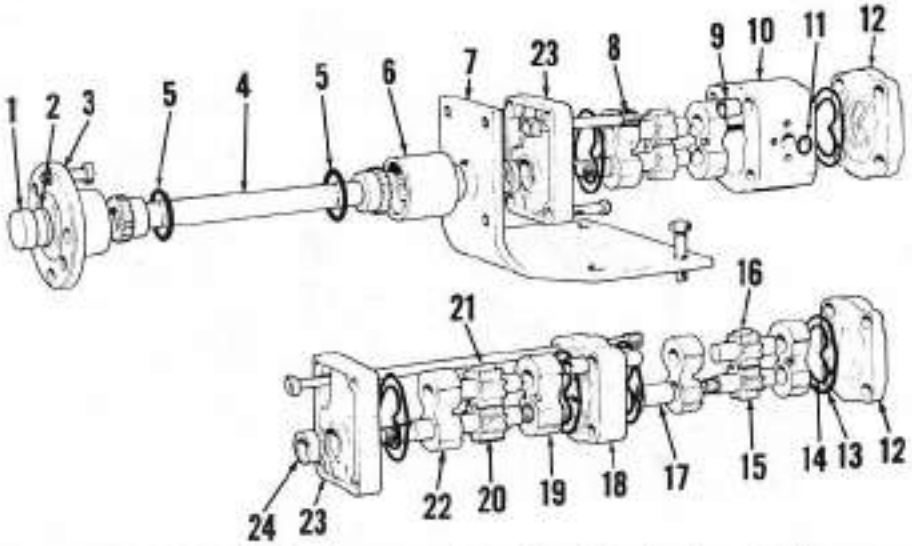


Fig. 196 — Exploded view showing construction of both the single and dual pump assemblies for Model 1200. Pump drive components and mounting bracket are also shown; pump is mounted in front of radiator (see Fig. 195) and is driven from engine crankshaft through shaft (4).

1. Rubber disc
2. Metal disc
3. Drive flange
4. Drive shaft
5. "O" rings
6. Drive coupling
7. Mounting bracket
8. Bearings
9. Hollow dowels
10. Pump body
11. "O" ring
12. End plate
13. "O" ring
14. Sealing ring
15. Dual pump drive rotor
16. Dual pump idler rotor
17. Drive connector
18. Separator plate
19. Bearing
20. Drive rotor
21. Idler rotor
22. Bearing
23. Flange end plate
24. Oil seal

paper is on an absolutely flat surface. Note: Thickness of bearing must not vary more than 0.002. The outer face of bearing may be lightly polished to obtain free movement in pump body. Inspect gear track in pump body for scoring or excessive wear, especially at intake side of pump. It is normal for gears to cut a light track at intake side of body. If body is reusable, remove any burrs at edge of gear track with fine emery cloth. Inspect gears for scoring or wear of teeth, side faces or journals. The gear journals must be within 0.0005 of each other and gear widths equal within 0.0002. Overall length of gears and bushing assembly should be 0.003 to 0.007 less than depth of gear pocket in pump body. Be sure that the scroll lubricating grooves in bushings are free from damage and foreign material.

When reassembling, lubricate seal with grease and all metal parts with clean motor oil. Refer to Fig. 194 and to previously applied scribe marks for assembly guides. Spring side of shaft seal must face out. Tighten assembly bolts to a torque of 40 to 50 Ft.-Lbs. and tighten gear retaining nut to a torque of 40 Ft.-Lbs. Be sure that pump can be turned by hand; pump should have a light even drag with no tight or rough spots.

### Model 1200

253. To remove model 1200 hydraulic pump, first remove the radiator grille. The pump is accessible through grille opening; refer to Fig. 195. Thoroughly clean pump, lines and surrounding area, then disconnect inlet and pressure lines from pump. Unbolt mounting bracket (7—Fig. 196) from tractor frame and remove the pump and bracket assembly. Straighten tab washer and remove nut retaining coupling (6) to pump shaft, then using suitable pullers, remove coupling and Woodruff key from shaft. Unbolt pump flange (23) from bracket.

Prior to disassembly of pump, scribe a mark across pump flange (23), body (10) or bodies and center spacer (18) and end plate (12) to aid in reassembly of unit. Remove the through bolts (8) and separate pump components on bench and lay them out in position as they are removed. Carefully clean and inspect the pump body (10). If body of single pump or either body of dual pump has excessive wear or scoring in gear track, it will be necessary to renew the complete pump assembly as body, end cover, flange and on the dual pump, the spacer are not serviced separately.

Reassemble using all new "O" rings (13 and 14) and new shaft seal (24). Install seal with lip to inside of flange (23). Reassemble using new bushings or matched gear sets as required, referring to exploded view in Fig. 196 and to previously affixed scribe marks as reassembly guides.

## R&R CONTROL VALVE ASSEMBLY

### All Models

254. To remove control valve assembly, first remove rockshaft and right hand bracket assembly with control valve attached as follows: Remove cover, complete with lowering control knob, from front of control lever housing and remove nut from connecting rod. On all models except models 770, 780 and 3800, disconnect brake linkage from lower end of hand brake lever. Unbolt and remove control lever housing from front of rear axle housing; it may be necessary to loosen or remove quadrant to remove all four housing bolts. With control lever housing removed, remove the two cap screws (A—Fig. 197) retaining pressure pipes to control valve housing. Loosen locknut while holding set screw (B), then back set screw out nine turns. Note: Do not turn set screw out more than 9 turns as lubrication pipe will be disengaged. Disconnect flexible cable from top link sensing unit, then remove sensing unit and place temporary cover over opening in PTO housing to prevent dirt from entering system. Disconnect

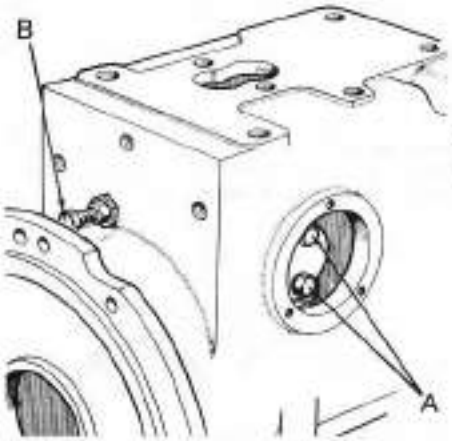


Fig. 197 — To remove control valve assembly, unbolt pressure line at (A) and unscrew lubrication line retaining set screw (B) 9 turns.

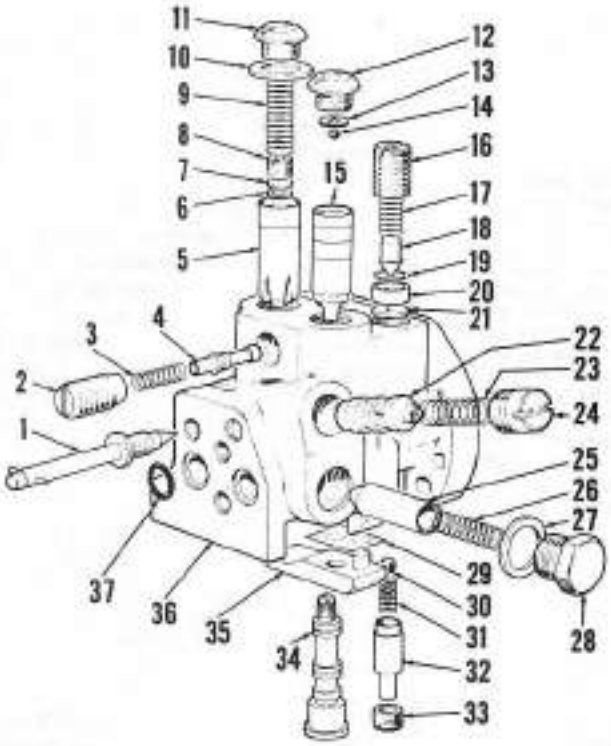


**Fig. 198—Exploded view of Selectamatic control valve assembly.**

1. Lowering valve needle
2. Latching valve plug
3. Latching valve spring
4. Latching valve
5. By-pass valve plunger
6. Nylon filter
7. Orifice washer (0.020)
8. Retaining plug
9. Valve plunger springs (2)
10. Sealing washer
11. Retaining plug
12. Hold valve plug
13. Ball retainer
14. Steel valve ball
15. Hold valve plunger
16. Relief valve retainer
17. Relief valve spring
18. Relief valve pepper
19. Adjusting shims
20. Relief valve seat
21. Orifice washer
22. Lowering valve
23. Lowering valve spring
24. Retaining plug
25. Non-return (check) valve
26. Non-return valve spring
27. Sealing washer
28. Retaining plug
29. Shims
30. T.C.U. valve ball
31. T.C.U. valve spring
32. T.C.U. valve plunger
33. Retaining plug
34. Spool valve
35. Abutment plate
36. Valve body
37. "O" ring

lift and leveling links from rockshaft arms and remove cover from right hand rockshaft bracket. Unbolt cover from rear end of ram cylinder housing (rockshaft left bracket). Note: About 1 quart of oil will run out as ram cylinder housing cover is removed. Unbolt right hand rockshaft bracket from axle housing and support rockshaft so that it will remain level, then remove rockshaft and right hand support bracket (with control valve attached) from rear axle housing.

With rockshaft and bracket assembly removed, unbolt and remove control valve from right hand bracket. Valve housing may be a tight fit on the locating dowels. To reinstall control valve, reverse removal procedure. Note: If set screw (B—Fig. 197) does not turn fully back into same position (9 turns) as before, loosen the set screw and relocate lubrication pipe. Refer to paragraphs 242 through 249 for necessary readjustments and to paragraph 241 for bleeding the system after reassembly.

## OVERHAUL CONTROL VALVE ASSEMBLY

### All Models

255. With control valve assembly removed as outlined in paragraph 254, refer to Fig. 198 and proceed as follows: Remove lowering control valve needle (1) and abutment plate (35), taking care not to lose any of the shims (29) located between plate and valve body. Remove the two lock nuts (not shown) from spool valve (34) and withdraw the valve. **Do not** attempt to remove the spool valve sleeve. Remove the two plugs (11 & 12) from top of valve body, lift out the springs (9) (hold valve spring is not shown) and turn valve body upside down so that hold and by-pass valve plungers will fall out. Note: The small steel ball (14) inside hold valve plunger (15) will also fall out when valve body is inverted. If the plungers do not fall out, insert a ½-inch wood dowel into the plungers to withdraw them. Remove plugs (8) from by-pass valve plunger (5) and remove the orifice washer (7) and nylon screen (6); early models did not have screen, but screen may be fitted in service. Remove relief valve plug (16) and remove the spring (17), plunger (18), shims (19), seat (20) and restrictor (21); take care not to lose any of the shims. Remove the two plugs (24 & 28) from side of valve body and remove the non-return (check) valve plunger (25) and spring (26) and the lowering valve plunger (22) and spring (23). Remove plug (2) from front of body and remove the latching valve spring (3) and plunger (4). Unscrew the retainer (33) from bottom of valve and allow the traction control plunger (32), spring (31) and valve ball (30) to fall out. **Do not** disturb the remaining plugs and seats in valve body.

Thoroughly clean valve body in kerosene and clean with compressed air; **do not** use rags or shop towels to wipe the valve body or any component as lint from cloth will cause malfunction of valve. Clean all plungers and spools and be sure they are free to slide and rotate in their bores with light finger pressure. If there are any signs of binding or sticking, the plungers may be polished using jeweler's rouge or diesel injector lapping compound. If the plungers or bores are scored, or if any of the seat faces (except the non-return valve seat) are worn or damaged, the valve is not suitable for further service and should be renewed with complete new valve assembly. The plungers are match ground to the bores and cannot be supplied separately. If all parts of the valve body except the non-return (check) valve seat are serviceable, renew seat as follows:

Using tool fabricated to dimensions shown in Fig. 199, remove the damaged check valve seat. Check fit of new seat in bore after cleaning all traces of Loctite sealant from valve body. If standard size seat (identifiable by one groove around outside) fits loosely, use a new 0.001 (two identification grooves) or 0.002 (three identification grooves) seat. Treat the bore and outside of new seat with Locquic primer, then apply a small amount of Loctite to outside diameter of seat and press seat into position. Be sure to clean any excess Loctite from valve body.

With all valve parts cleaned in kerosene, air dried and lubricated with clean oil, reassemble as follows: Fit spring (not shown) on lower end of spool valve (34—Fig. 198). Push valve into position against spring and install the flat washer and two lock nuts, finger tight, on upper end of valve.

Install nylon screen (6) and orifice washer (7) in by-pass plunger (4) and secure with retainer (8). On early models without filter screen (6), a screen may be installed by using new, shorter retainer (8). Install plunger in bore, then install spring (9) and plug (11) with new gasket (10).

Install hold valve plunger (15), drop steel ball (14) into plunger, then install retainer washer (13), spring (not shown) and plug (12) with new gasket. Early models were not fitted with retainer washer (13); however, a new washer can be installed between ball (14) and spring on these models.

Install latching valve plunger (4) and spring (3), then install plug (2) tightly. Place restrictor washer (21) in relief valve bore, then install seat (20), same shims (19) as removed, valve (18), spring (17) and retainer (16). Note: New relief valve assembly has correct number of shims for

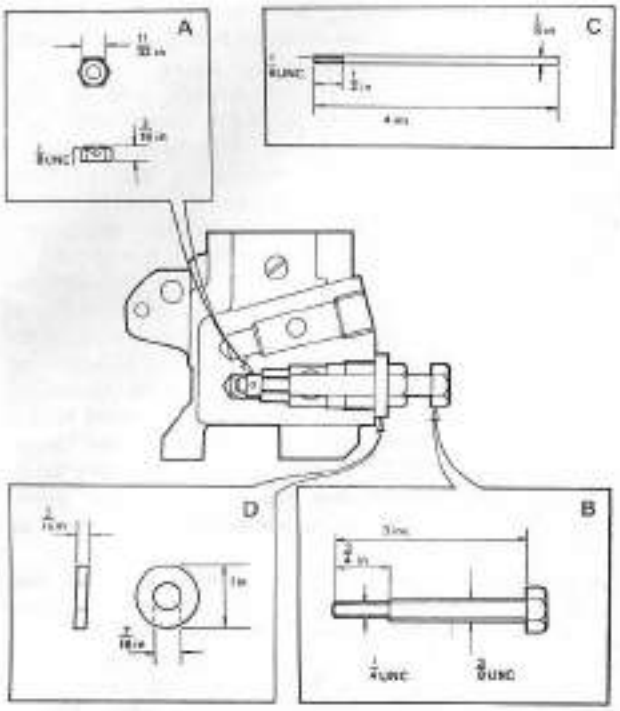


Fig. 199—To renew non-return (check) valve seat, a tool can be fabricated to dimensions shown. Cross-sectional drawing of valve body in center view shows tool in position to remove valve seat. Pin (C) is used to position small nut (A) while puller bolt (B) is threaded into nut, then pin is unscrewed from nut. Hold bolt and turn outer (large) nut to remove seat.

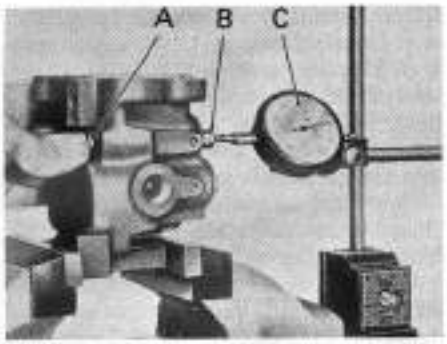


Fig. 200—View showing dial indicator being used to adjust spool valve; refer to text for procedure.

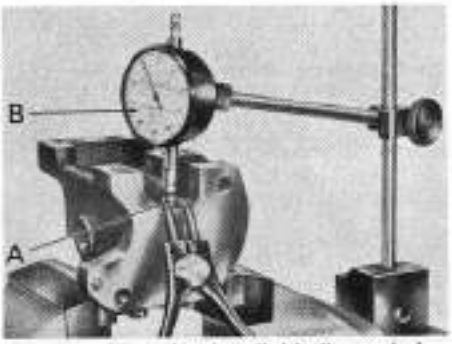


Fig. 201—View showing dial indicator being used to adjust traction control valve; refer to text for procedure.

proper pressure setting. Install non-return valve plunger (25), spring (26) and plug (28) with new gasket (27). Invert valve body and drop traction control valve ball (30) into bore, then install spring (31), plunger (32) and retainer (33); do not tighten retainer at this time. Adjust spool valve, traction control valve and hold relief valve as outlined in following paragraph.

## ADJUST CONTROL VALVE ASSEMBLY

### All Models

256. With valve assembled as outlined in paragraph 255, adjust assembly as follows:

Clamp control valve assembly in soft jawed vise and mount dial indicator plunger against adjusting nut end of spool valve as shown in Fig. 200. Push opposite end (A) of spool valve inward to fully compress thrust spring and zero dial indicator with valve at this position. Release spool valve and observe dial indicator reading. Adjust inner nut so that total movement of spool valve is within 0.001 of dimension etched on the valve, then tighten outer nut. Recheck movement of spool valve to be sure dial indicator reading is still within 0.001 of setting dimension and readjust nuts if necessary.

With spool valve properly adjusted, remove control valve assembly from vise and turn retainer (33—Fig. 198) on traction control valve plunger (32) in until plunger free movement is restricted to 0.002, then back retainer out ⅔-turn. Mount control valve in soft jawed vise as shown in Fig. 201 and set dial indicator plunger on top of the traction control valve plunger (A). With valve plunger resting on spring, zero the dial indicator. Then, using needle nose pliers as shown, lift valve plunger up against retainer and observe dial indicator reading. If reading is not within limits of 0.034 to 0.040, readjust traction control valve retainer until correct movement of valve plunger is obtained. Stake the retainer to hold it in the correct position.

With the spool valve and traction control valve properly adjusted, valve assembly can be bench tested for hold valve relief pressure and excessive leakage as follows: Fabricate an adapter to dimensions shown in Fig. 202 so that a hydraulic hand pump (with pressure gage) can be attached to control valve assembly as shown in Fig. 203. Apply pump pressure and allow all passages of control valve to fill with oil. Note: New, clean transmission lubricant (SAE 20W-30 or 20W-40 motor oil) should be used in test pump. Build up pressure until gage reading is 2000 psi and observe for leakage past hold valve, non-return (check) valve and spool valve. Slight leakage at openings (A, B & C) is normal; however, excessive flow at any of these openings will indicate a faulty valve. Leakage at hold valve plunger will allow oil to escape past flow control valve and appear at (A). Incorrect seating of non-return valve will allow oil to escape at hole (B) in adapter block. Sticking or incorrectly adjusted spool valve will allow oil to leak out small drilled hole (C) in valve body.

If only slight seepage of oil occurs at each of the points, valve can be considered serviceable. Check hold relief pressure by building up gage pressure until oil appears at valve plug

Fig. 202—View showing adapter that can be made to connect a hand hydraulic pump to control valve assembly for testing purposes. Dimensions are given in legend.

A. 2 inches
B. 1⅝ inches
C. ⅝-inch
D. 2 inches
E. ⅝-inch
F. ⅝-inch
G. 13/32-inch diameter
H. 7/16-inch diameter
J. Drill and tap suitable diameter for available connector
K. Surface grind this face

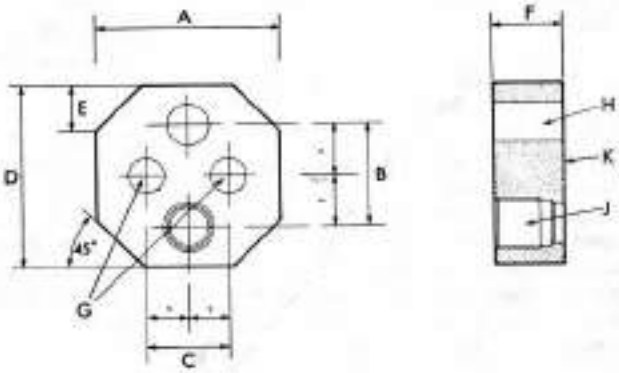

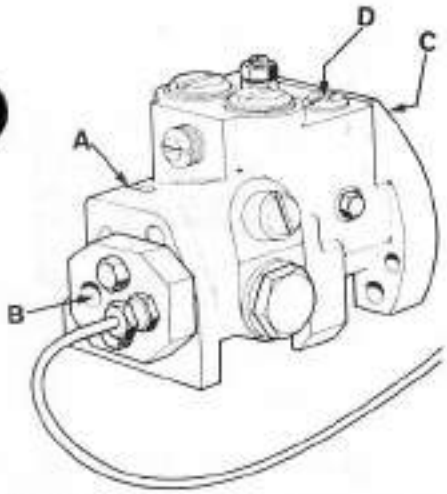


**Fig. 203 — View showing adapter connecting pressure line to control valve assembly. Very slight leakage from valve openings is normal. If excessive leakage shows at any of the openings (A, B, C or D), refer to text for location of faulty valve.**

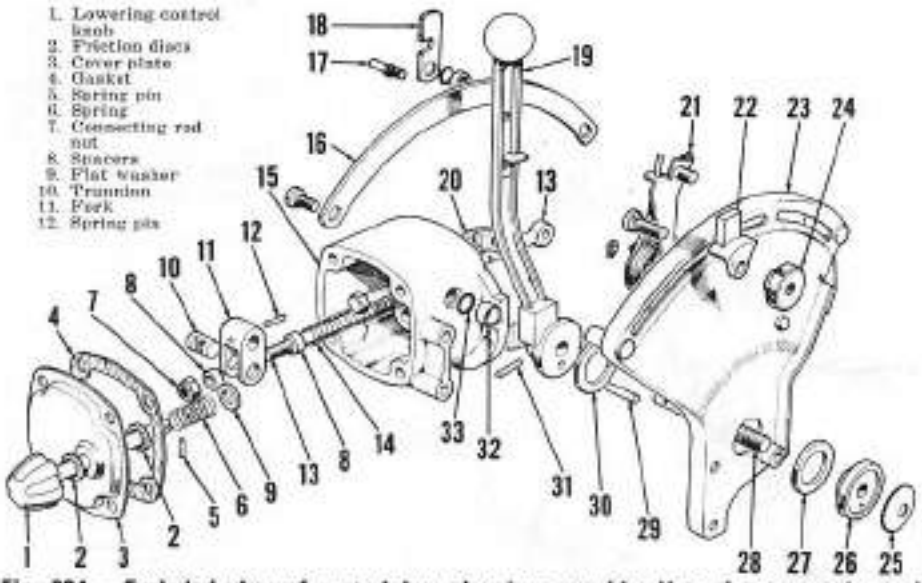


**Fig. 204 — Exploded view of control lever housing assembly. Note that connecting rod (13) is also shown in exploded view of control mechanism (rockshaft right hand support bracket) housing. Refer also to assembly drawing in Fig. 206.**

13. Connecting rod
14. Spring
15. Control lever housing
16. Quadrant plate
17. Special stud (optional)
18. Lever latch (optional)
19. Control lever
20. Gasket
21. Quadrant spring & bracket
22. Re-set guide
23. Quadrant
24. Knurled nut
25. Belleville washer
26. Friction plate
27. Friction washer
28. Control lever shaft
29. Dowel pin
30. Friction washer
31. Spring pin
32. Plastic bushing
33. "O" ring

(D); gage pressure should then be approximately 2500 psi. If hold relief valve pressure is not correct, shims (19—Fig. 198) may be added or removed between retainer (16) and valve seat; removing shims will increase relief pressure. Shims are available in thicknesses of 0.003, 0.007 and 0.015.

## R&R AND OVERHAUL CONTROL MECHANISM

### All Models

257. Remove control lever housing and rockshaft with right hand bracket as outlined in paragraph 254. Refer to Fig. 204 for disassembly and reassembly guide to overhaul control lever housing assembly; procedure for doing so is evident from inspection of unit and with reference to exploded view.

To remove and disassemble control mechanism from rockshaft bracket, proceed as follows: Disconnect flexible cable (C—Fig. 206) and withdraw cable from bracket. Remove guide bracket (61—Fig. 205) and push rods (52 & 53), then unbolt and remove control valve assembly from bracket. Unbolt and remove cam (56) and withdraw rockshaft from bracket. Remove snap ring (40) and connecting rod (13) from rocker shaft (37). Drive spring pin (35) from selector fork (34) and remove expansion plug (63) from right hand side of bracket by drilling hole through plug and prying it out. Drive selector rod (41) out and remove fork (34), catching detent ball (36) as rod is removed from bracket. Extract spring (42) with wire hook.

Remove rocker shaft locating screw (38) (screw may be hid by gasket) and slide rocker arm (66) from shaft. Turn rocker shaft so that arm pin is to center of bracket, then slide shaft from bore. It is not necessary to remove expansion plug (39). Remove pin (47) and pull selector dial pointer (46) from shaft. Remove dial (48), breather pad (49) and "O" ring (45). If rockshaft bushing (50) is worn, drive bushing from bracket.

258. To reassemble control mechanism, reverse disassembly procedure and note the following: Be sure that rockshaft bushing (50) is installed in bracket so that grease hole is aligned with grease fitting (F) and with split in bushing to rear side of bracket. Fit new "O" ring (62) on rockshaft before installing shaft through bushing. Hold detent ball (36) in with pin

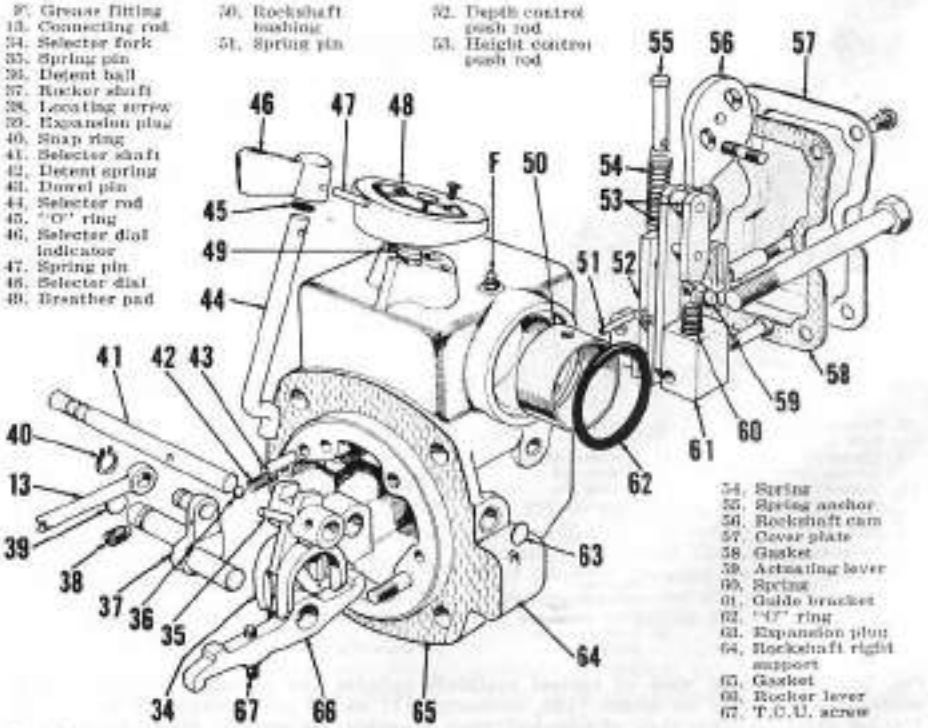


**Fig. 205—Exploded view of hydraulic system control mechanism that is mounted in rockshaft right hand support bracket (64). Note that connecting rod (13) is also shown in Fig. 204. Refer also to the assembly view in Fig. 206.**

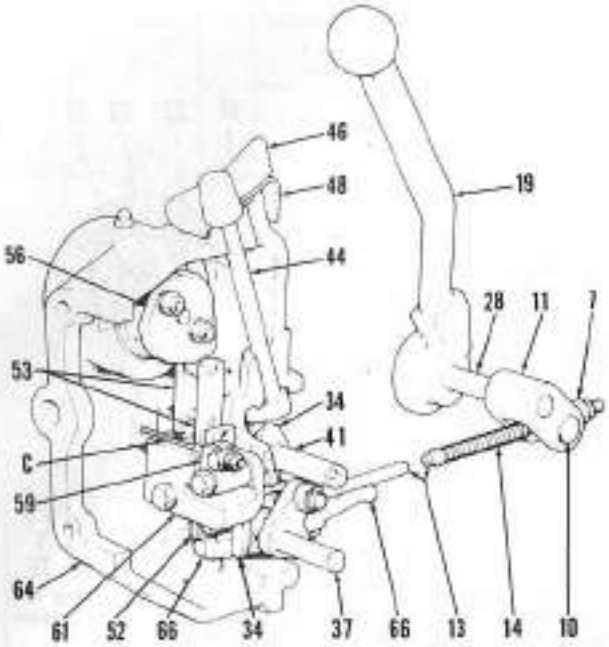


**Fig. 206—Assembly view of control lever and control mechanism. Refer to Figs. 204 and 205 for exploded view of control lever and mechanism.**

C. Flexible cable
7. Connecting rod nut
10. Trunnion
11. Fork
13. Connecting rod
14. Spring
19. Control lever
28. Control lever shaft
34. Selector fork
37. Rocker shaft
41. Selector shaft
44. Selector rod
46. Selector indicator
48. Selector dial
52. Depth control push rod
53. Height control push rod
56. Rockshaft cam
59. Actuating lever
61. Guide bracket
64. Rockshaft right support
66. Rocker lever

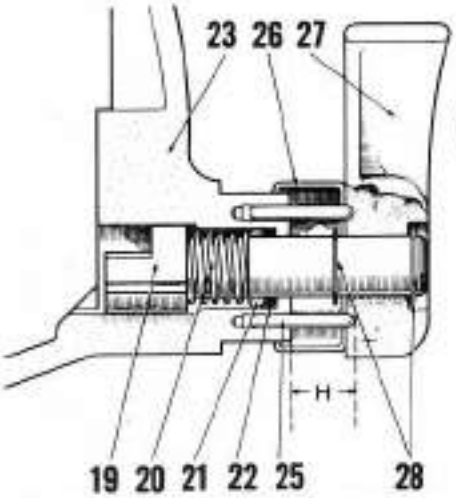


**Fig. 208—Cross-sectional view of lift linkage latch located in ram cylinder cover (23). Refer also to Fig. 207.**

19. Lift linkage latch
20. Spring
21. Spacer
22. "O" ring
23. Ram cylinder cover
25. Pins
26. Dust shield
27. Latching lever
28. Snap rings

punch when inserting selector rod in bracket.

After unit is reassembled and installed on tractor, refer to paragraphs 242 through 249 and make necessary adjustments for proper performance of hydraulic system.

## R&R AND OVERHAUL ROCKSHAFT CYLINDER

### All Models

239. The ram cylinder piston can be removed without removing ram cylinder from axle case. Support lift linkage in fully raised position by blocking up or wiring up rear end of lift links. Remove ram cylinder cover (rockshaft left support bracket) and drive pin from ram arm, then remove connecting rod. Remove the three-way valve or connector from front end of ram cylinder and insert a small diameter rod through oil feed hole to push piston rearward out of cylinder. Inspect piston and cylinder for scoring and renew piston rings as follows: Soak new leather back-up ring in thin oil for one-half hour prior to installation. Remove old leather and rubber rings from piston, then install new leather ring with rough side towards front (closed) end of piston. Install rubber "O" ring at front side of leather ring, then let piston set for about one-half hour until leather ring settles into groove. Lubricate piston and cylinder bore wtih clean motor oil, then reinstall piston. Cylinder bore is chamfered to compress the rings as piston is pushed into cylinder.

If piston and cylinder bore are scored, the cylinder may be renewed or honed to 0.020 oversize and a new, oversize piston installed. To remove cylinder, first remove rockshaft and right support assembly as outlined in paragraph 254. Then, remove connector or three-way valve from front end of ram cylinder and bump cylinder rearward out of rear axle housing. If cylinder bore is being honed oversize, it must be finish honed to prevent excessive wear of piston rings. To reinstall honed cylinder or install new cylinder, reverse removal procedure using new gasket and "O" ring.

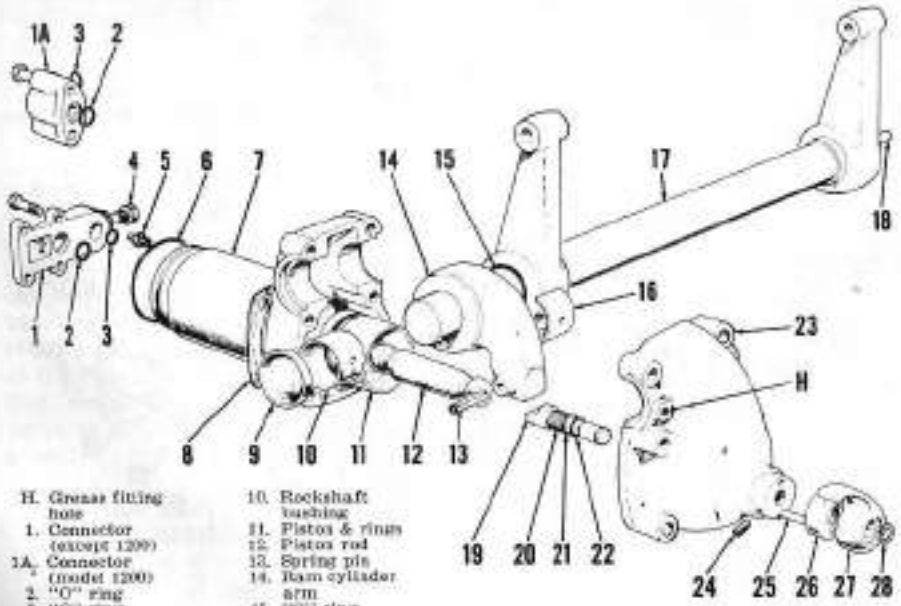


H. Grease fitting hole
1. Connector (except 1200)
1A. Connector (model 1200)
2. "O" ring
3. "O" ring
4. Connector plug
5. Bleeder valve
6. "O" ring
7. Ram cylinder
8. Gasket
9. Plug
10. Rockshaft bushing
11. Piston & rings
12. Piston rod
13. Spring pin
14. Ram cylinder arm
15. "O" ring
16. Rockshaft bushing (2 halves)
17. Rockshaft
18. Cam pivot pin
19. Lift linkage latch
20. Spring
21. Spacer
22. "O" ring
23. Ram cylinder cover
24. Locating screw
25. Pin (needle bearing rollers)
26. Dust shield
27. Latching lever
28. Snap ring

**Fig. 207—Exploded view of typical rockshaft cylinder and rockshaft assembly. Connector (1A) is used on model 1200, connector (1) on all other models. Refer to Fig. 208 for cross-sectional view of rockshaft latch assembly. No attempt should be made to remove or reposition the rockshaft lift arms. Rockshaft ram cylinder arm (14) is renewable by splitting old arm, then pressing arm from shaft. Heat new arm to expand to it, press into position and allow to shrink fit to shaft.**

## ROCKSHAFT AND SUPPORT LATCH

### All Models

260. The rockshaft is supported in renewable bushings. Refer to paragraph 257 for information on renewing bushing in right hand support bracket (control mechanism housing).

The bushings (10 & 16—Fig. 207) at left end of rockshaft can be renewed after removing ram cylinder cover (23). Be sure that grease hole in bushings are aligned with grease fitting holes (H) in cover.

Refer to Fig. 208 for cross-sectional view showing lift linkage latch assembly. During normal operation of hydraulic system, the latch (19) is withdrawn by lever (27) riding on ends of the steel pins (25). When it is desired to latch lift linkage in raised position, turn lever (27) so that pins enter recesses in lever allowing spring (20) to push latch forward to engage ram cylinder arm. Linkage can be disassembled after removing ram cylinder cover (23) by holding latch rearward against spring pressure while removing the snap rings (28). A guide screw (24—Fig. 207) engages slot in latch plunger (19) to keep it from turning. The pins (25) are actually needle bearing rollers; thus if broken, are too hard to be drilled out. Ram cylinder cover can be salvaged if pin is broken by drilling new pin holes offset slightly from the original holes.

## TOP LINK SENSING UNIT

### All Models

261. Refer to Fig. 209 for exploded view of top link sensing unit typical of all models except early model 770 with single acting sensing unit.

Disassembly and reassembly of unit is obvious from examination of unit and with reference to Fig. 209. Sleeve (13) is secured to shaft (18) with Loctite. Spacer (17) is used only on models 990 and 1200. Spring (12) end play on assembled shaft should not exceed 0.010. If end play of spring is more than 0.010, install a thicker thrust washer (11); thrust washers are available in thicknesses of 0.355 to 0.405 in steps of 0.010. When unit is being assembled, check end play of shaft assembly as end plate (15) retaining cap screws are being tightened. End play should be at minimum when cap screws are fully tightened. If end play decreases as cap screws are tightened, then starts to increase when cap screws are fully tightened, shim (14) thickness is not sufficient and shims must be added. If end play is at minimum when cap screws are fully tightened, but exceeds 0.010, shim thickness is too great and shims equal to excessive end play must be removed. Shims are available in thicknesses of 0.005, 0.010 and 0.030.

After unit is reinstalled, check and adjust flexible cable as outlined in paragraph 244.

**Fig. 209—Exploded view of top link sensing unit typical of all models except model 770 with single acting sensing unit. Spacer (17) is used on models 990 and 1200 only.**

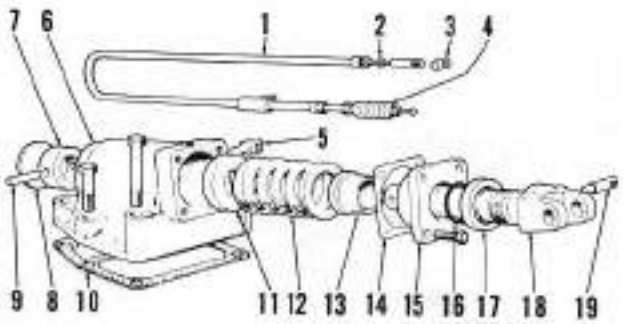


1. Flexible cable
2. "O" ring
3. Actuating arm pin
4. Boot
5. Cable support, outer
6. Housing
7. Collar
8. Expansion plug
9. Pin
10. Gasket
11. Thrust washer (variable thickness)
12. Sensing spring
13. Sleeve
14. Shims
15. End plate
16. "O" ring
17. Spacer
18. Top link yoke shaft
19. Cable support, inner

**Fig. 211—Exploded view of hydraulic lines and filters for early model 770. By-pass filter mounting block (22) was introduced to provide a return port for external hydraulic unit return oil and may be installed on earlier units where needed. Refer to Fig. 212 for model 770 and model 780 using full flow suction filter element instead of by-pass filter (14 to 20).**

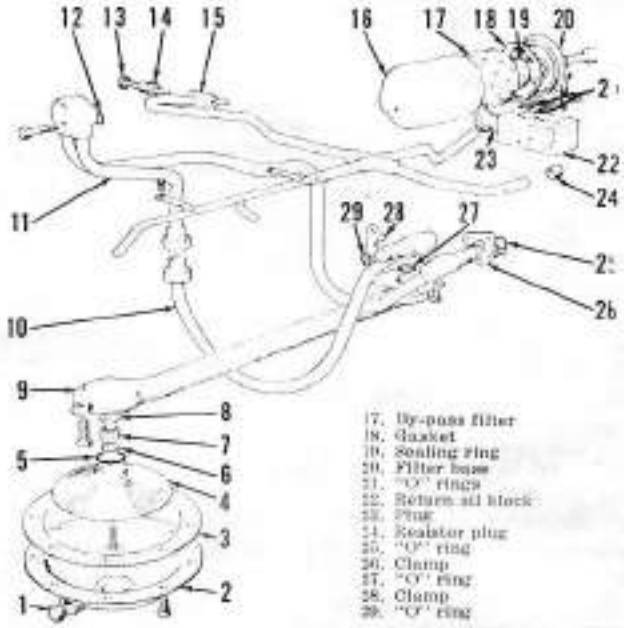


1. Drain plug
2. Filter cover
3. Gasket
4. Suction screen
5. "O" ring
6. Washer
7. Magnet
8. Washer
9. Pump suction line
10. Ram cylinder pipe
11. Control valve pipe
12. "O" ring
13. Set screw
14. Dealing
15. Lubrication pipe
16. Filter cover
17. By-pass filter
18. Gasket
19. Sealing ring
20. Filter base
21. "O" rings
22. Return oil block
23. Plug
24. Resistor plug
25. "O" ring
26. Clamp
27. "O" ring
28. Clamp
29. "O" ring

## HYDRAULIC LINES AND FILTERS

### All Models Except Model 1200

262. Refer to Figs. 211, 212 and 213 for exploded views showing typical internal hydraulic line installations, suction filter units and for early models 770, 880 and 990, the external by-pass type filter. All later models have a full flow element type suction filter (36—Fig. 212) and are not equipped with a by-pass filter. When the filter element (36) becomes clogged, oil starvation to pump could occur; thus, a vacuum switch (34) is incorporated in the suction line (9A) to activate a warning light on instrument panel if vacuum in line becomes excessive. Note that it is normal for warning light to be on when transmission lubricant is cold or when operating at engine speeds above 1800 RPM. Suction filter must be renewed whenever light stays on with transmission lubricant at normal operating temperature and with engine running below 1800 RPM.

On early model 770, by-pass filter is bolted directly to axle housing. To provide a return port for oil when there is a continuous flow to an external valve or motor, a block (22—Fig. 211) was installed between filter and axle housing. Plug (23) can be

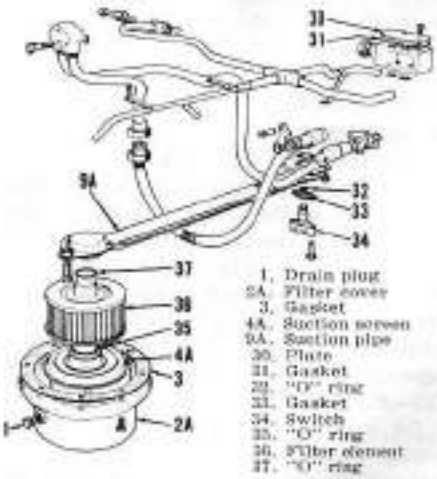


1. Drain plug
2A. Filter cover
3. Gasket
4A. Suction screen
9A. Suction pipe
30. Plate
31. Gasket
32. "O" ring
33. Gasket
34. Switch
35. "O" ring
36. Filter element
37. "O" ring

**Fig. 212 — On late model 770 and models 780, a full flow filter element (36) is used. Warning light switch (34) is actuated when filter becomes clogged. Other components of hydraulic lines are similar to that shown in Fig. 211.**

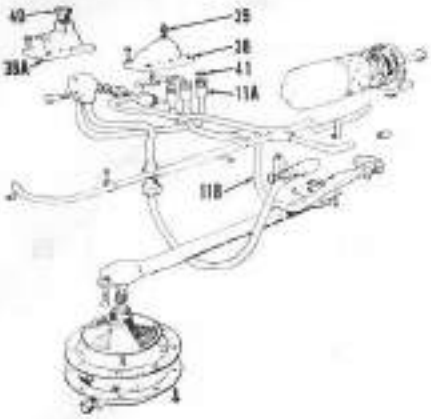


**Fig. 213 — View showing hydraulic lines and filters for early models 880 and 990. On model 4600 and late models 880 and 990, a full flow filter element (see Fig. 212) is used instead of the by-pass type filter assembly.**

11A. Control valve pipe
11B. Ram cylinder pipe
38. Axle cover (early)
38A. Axle cover (late)
39. Bleed plug (early)
40. Pressure passage plug
41. "O" rings

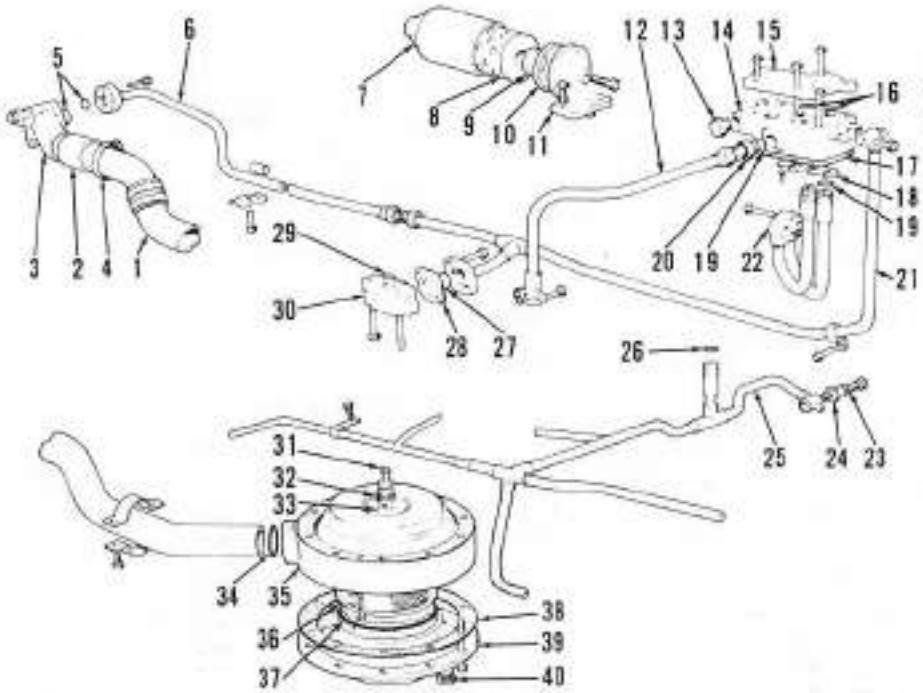


**Fig. 214 — Exploded view of hydraulic lines and filters for model 1200 with single hydraulic pump. Late models with single pump have a full flow suction filter similar to that shown in Fig. 212.**

1. Pump suction pipe
2. Hose connector
3. Elbow
4. Hose clamps
5. "O" rings
6. Pump pressure pipe, front
7. Filter cover
8. By-pass filter
9. Sealing ring
10. Gasket
11. Filter base
12. Ram cylinder pipe
13. Return port plug
14. Adapter plate
15. Control valve cover
16. "O" rings
17. Gasket
18. Clamp
19. "O" ring
20. Connector
21. Pump pressure pipe, rear
22. Control valve pipe
23. Set screw
24. Bushing
25. Lubrication pipe
26. "O" ring
27. "O" ring
28. Gasket
29. "O" ring
30. Pump relief valve
31. Screw
32. Magnet
33. Washer
34. "O" ring
35. Suction screen housing
36. Suction screen
37. "O" ring
38. Gasket
39. Cover
40. Drain plug

removed to provide a return port for oil so that oil will be fed through transmission and PTO lubrication pipes. On later models without by-pass filter, block is fitted with a cover plate. On models 880, 990 and 4600, return oil port is located in plate (38A —Fig. 213) bolted to axle housing. Note: On early 880 and 990, plate (38) did not have return opening; late plate (38A) may be installed on these models if needed.

## Model 1200

263. Refer to Figs. 214 and 215 for views showing hydraulic lines and filters for model 1200. All hydraulic lines except control valve to adapter plate line (22—Fig. 214 or 19—Fig. 215) and lubrication pipes (25—Fig. 214) are located externally. Remote control valve(s) (not shown) are fitted between adapter plate and cover plate (15—Fig. 214 or 11—Fig. 215).

On models with dual hydraulic pump (see Fig. 215), a combining valve (14) allows oil from both pumps to be used for remote control valve or separates flow with oil from one pump section being used to operate tractor lift system and from second pump section being available for remote control usage.

Late model 1200 with single pump assembly (Fig. 214) is equipped with a full flow suction filter and warning light as described for other models in paragraph 262.

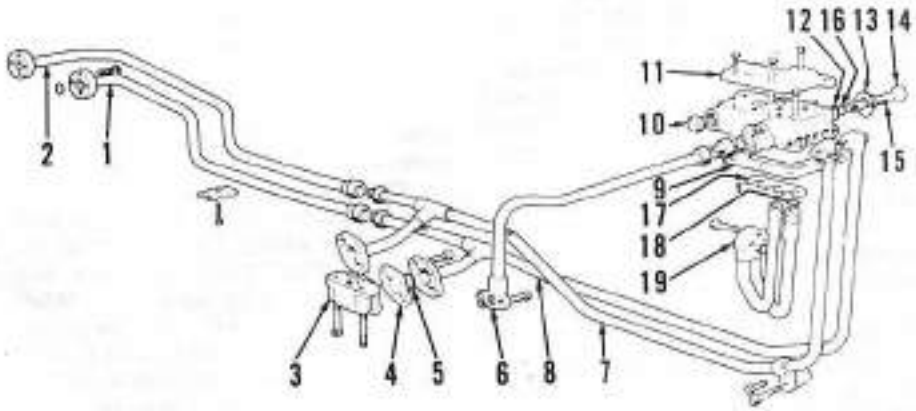


**Fig. 215 — Exploded view of high pressure hydraulic lines for model 1200 with dual hydraulic pump: pump suction lines, filters, and lubrication line are as shown in Fig. 214 for models with single hydraulic pump. Combining valve (14) separates flow of one pump to tractor hydraulic piston and flow of second pump to remote control valve, or combines flow of both pumps to remote control valve.**

1. Rear pump pressure line
2. Front pump pressure line
3. Relief valves (2)
4. Gaskets
5. "O" rings
6. Ram cylinder line
7. Front pump rear line
8. Rear pump rear line
9. Gasket
10. Plug
11. Remote valve cover
12. "O" ring
13. Retainer
14. Combining valve
15. Screws
16. "O" ring
17. Clamp
18. "O" rings
19. Control valve pipe

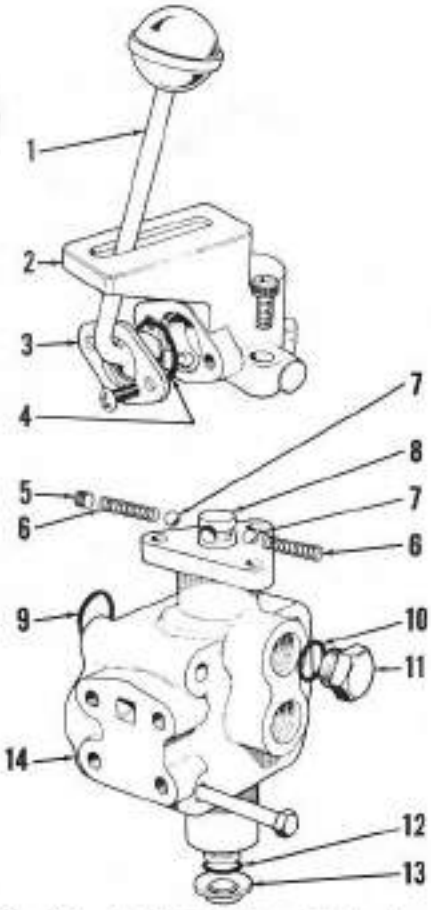


**Fig. 216 — Exploded view of late type three-way valve assembly.**

1. Control lever
2. Lever bracket
3. Retainer
4. "O" ring
5. Plug
6. Detent springs
7. Detent balls
8. Valve spool
9. "O" ring
10. "O" ring
11. Plug
12. "O" ring
13. Breather
14. Valve body

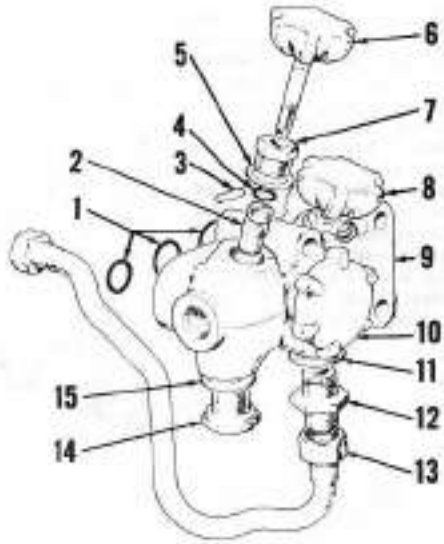


**Fig. 217 — Exploded view of early type three-way valve assembly used on early models 770, 880 and 990.**

1. "O" rings
2. Valve plungers (3)
3. Pins
4. "O" rings (3)
5. Sealing washers
6. Remote port valve knob
7. Bushing
8. Remote port valve knob
9. Valve body
10. Ram cylinder valve knob
11. Sealing washer
12. Special union
13. Pipe to remote coupling
14. Plug (when port is not used)
15. Sealing washer

## REMOTE (EXTERNAL) CONTROL VALVES

### Three-way Valve Assembly, All Models

264. Refer to Fig. 216 for exploded view of three-way valve used on all late models and to Fig. 217 for early type three-way valve. The valve mounts on front end of rockshaft ram cylinder and is used to control flow of oil to ram cylinder or to a remote cylinder by closing passage to ram cylinder and opening passage to remote cylinder port.

On late type valve (Fig. 216), valve spool (8) and valve body (14) are not serviced except as a complete assembly which includes all parts shown except port sealing plugs and mounting bolts. All other parts are available separately. Be sure that breather (13) is clean and not damaged in any way. Detent balls (7) and springs (6) are located in bore of lever bracket (2); install one spring and ball in blind hole and hold ball depressed with pin when installing lever bracket on valve and valve body assembly. Then, install second detent ball and spring and retain with plug (5).

On early type valve (Fig. 217), valve plungers (2) are available separately from valve body (9); however, renewal of plunger sealing "O" rings (4) will correct external leakage past plunger. If, when closed, oil to ram cylinder or remote cylinder is not completely stopped, examine both the plungers and seats in valve body. If seats are damaged, complete valve assembly must be renewed.

### Two-Way Remote Control Valve, All Models So Equipped

265. Refer to Fig. 218 for exploded view of remote control valve that can be used to operate remote cylinders independently of tractor hydraulic lift system. Valve cover plate is not shown; refer to Fig. 214 or 215.

Valve spool (24—Fig. 218) and valve body (29) are not serviced except as a complete valve assembly which includes all parts shown except operating lever (18).

Disassembly and reassembly of unit is evident from inspection of unit and with reference to exploded view. Be sure not to lose any of the shims (14); shims are used to adjust pressure at which the detent valve (17) opens, releasing the detent balls (9) and allowing valve spool to return to neutral (hold) position. Note that the detent release pressure must be lower than the hydraulic pump relief pressure, otherwise the detent relief valve will not operate.

When reassembling valve unit, clean the threads on detent spring retainer (10) and inner end of control valve spool and secure with Loctite compound. Use all new sealing "O" rings when reassembling unit.

**Fig. 218 — Exploded view of remote control valve assembly available for all models and standard equipment on model 1200 imported to U.S. Refer to Fig. 214 or 215 for adapter plate and valve cover.**

1. Plug
2. Detent cap
3. Snap ring
4. Washer
5. Detent piston spring
6. Detent release plunger
7. Detent piston
8. "O" ring
9. Detent balls
10. Centering spring retainer
11. "O" ring
12. Centering spring
13. Washer
14. Shims
15. Spring guide
16. Poppet valve spring
17. Poppet valve
18. Operating lever
19. Bushing
20. Lever shaft
21. "O" ring
22. Wiper seal
23. Pin
24. Valve spool
25. Plug (when port is not used)

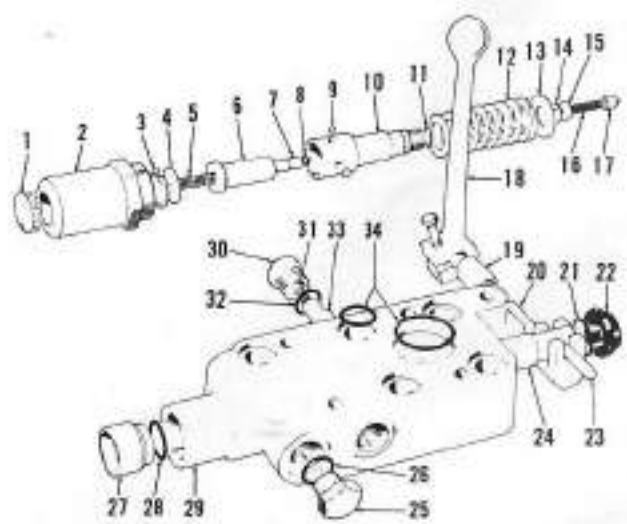


26. "O" ring
27. Bushing
28. "O" ring
29. Valve body
30. Plug
31. Spring
32. "O" ring
33. Check valve
34. "O" rings

### Dump Valve, All Models So Equipped

266. Refer to Fig. 219 for exploded view of dump valve assembly; inset shows installation of valve in rear axle housing. To operate the dump valve, first place Selectamatic control lever in lowering position, then twist dump valve knob to release valve and pull knob upward. When remote cylinder is lowered, return dump valve to closed position and lock in place by twisting knob. Valve should not be used to lower 3-point lift linkage unless there is no load on the lift links.

Disassembly and reassembly of dump valve is obvious from inspection of unit and with reference to exploded view in Fig. 219. Reassemble using new "O" rings, lubricating the rings with light grease prior to reassembly. When reinstalling valve, tighten cap screws (1) snug, but not tight, then start engine and pull control lever fully rearward against quadrant spring pressure until all air is expelled, then tighten valve retaining cap screws to a torque of 40 Ft.-Lbs.

**Fig. 219 — Exploded view of dump valve. Valve is installed to obtain faster return of oil from remote cylinders than can be obtained through standard tractor hydraulic lift system circuit. The dump valve is fitted in place of the axle cover plate over Selectamatic control valve and also replaces the hold valve release plug; refer to cross-sectional view in inset.**

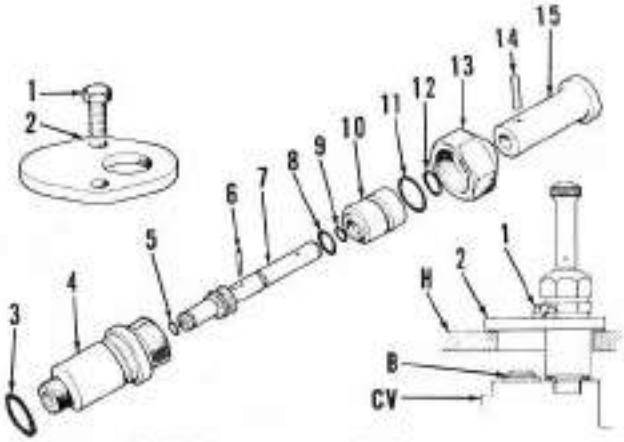


B, By-pass valve plug
CV, Control valve
H, Axle housing
1, Cap screw
2, Valve mounting plate
3, "O" ring
4, Valve body
5, "O" ring
6, Pin
7, Valve plunger
8, "O" ring
9, "O" ring
10, Fastening
11, "O" ring
12, "O" ring
13, Special nut
14, Pin
15, Valve knob

# NOTES