Catalogue

Label	Part code and specifications	Part name	Page code
1	4L22BT-1H44	Engine assembly(001)	1
2	TL01110060000K	Air filter assembly(001)	3
3	TE354.13	Cooling system assembly	5
4	TE354.201	Hand throttle, stall pull line assembly(005)	7
5	TE300.211D	Clutch assembly	9
6	TE354.212	Clutch operating mechanism assembly(011)	11
7	TE350.22C	Exhaust system assembly(002)	13
8	TL02311010000	Front drive axle assembly	15
9	TL02312010000K	Bracket assembly(001)	27
10	TE254.313G	Front support assembly(002)	29
11	TE254.314G	Rear support assembly(002)	31
12	TE300.35	Traction device assembly	33
13	TE354.361T	Shuttle shift assembly(005)	35
14	TE250.362M	Shuttle type shift control assembly	41
15	TE354.371T	Transmission assembly(007)	43
16	TE354.372A	Transmission case rear central assembly(010)	49
17	TE354.373	Transmission control assembly	55
18	TE300.391	Left axle assembly	61
19	TE300.392	Right axle assembly	63
20	TE250.401A	Steering wheel assembly	65
21	TE354.402	Steering pipe assembly(012)	67
22	TL01403040000K	Steering column assembly(002)	71
23	TE300.411	Power output shaft assembly(6 teeth)	73
24	TE354.412	Power output gear assembly(006)	75
25	TE354.413	Power output control mechanism assembly	77
26	TE254.421B	Transfer case assembly(004)	79
27	TE354.422	Transfer gear shaft and shield assembly(005)	81
28	TE254.423C	Transfer box control assembly(007)	83
29	TE354.431A	Brake assembly(006)	85
30	TE354.433B	Service brake control assembly	87
31	TE300.44	Seat assembly(004)	93
32	TE250.472F	Floor assembly(013)	95
33	TE254.457	Front connection assembly(004)	99

Catalogue

Label	Part code and specifications	Part name	Page code
34	TE354.458	Rear connection assembly(004)	101
35	TE250.471C	Hood assembly(012)	103
36	TE250.474C	Instrument panel assembly(001)	105
37	TE250.476D	Hood air spring mounting assembly(003)	107
38	TE250.477	Hood lock control assembly(005)	109
39	TL01481190000K	Engine wiring harness assembly(003)	111
40	TL01482320000K	Body harness assembly	113
41	TL01483020000K	Headlight harness assembly(001)	115
42	TL01484240000K	After installing wire harness assembly	117
43	TE300.485C	Battery assembly(004)	119
44	TE2S487030000K	Combination instrument installation assembly(001)	121
45	TL02500010000K	Fuel tank assembly(002)	123
46	TE354.55	Lift assembly	125
47	TE354.56	Suspension assembly(012)	127
48	TE354.57	Distributor and control mechanism assembly(003)	131
49	TL02581010000K	Oil pump tubing oil filter assembly(001)	135
50	TE354.582	Multiway valve oil pipe assembly(012)	137
51	TE254.742	Front weight assembly(010)	141
52	TE354.46A	Safety rack assembly	143
53	TA600.62A	3 inch seat belt assembly	145
54	TE354.202	Foot throttle assembly(006)	147
55	TE204.32F	Front drive wheel assembly	149
56	TE254.34F	Rear drive wheel assembly (13–20 gardening)	151
57	TE354.583	Simple hydraulic output assembly assembly(003)	153
58	TE250.556B	Hydraulic fuel tank assembly(009)	155
59	FT300.49.001	Tool kit assembly	157

4L22BT-1H44 Engine assembly(001)

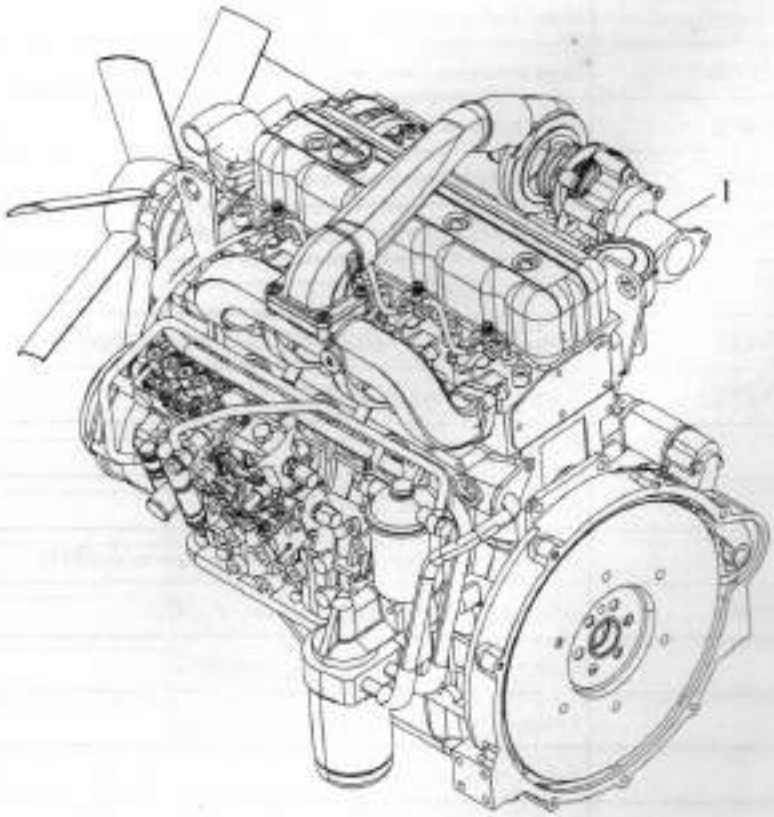

4L22BT-1H44 Engine assembly(001)

No.	Part code and specification	Part name	Quantity	Remark
	4L22BT-1H44	Engine assembly	1	
1	4L22BT-1H44	Engine assembly	1	

TL01110060000K Air filter assembly(001)

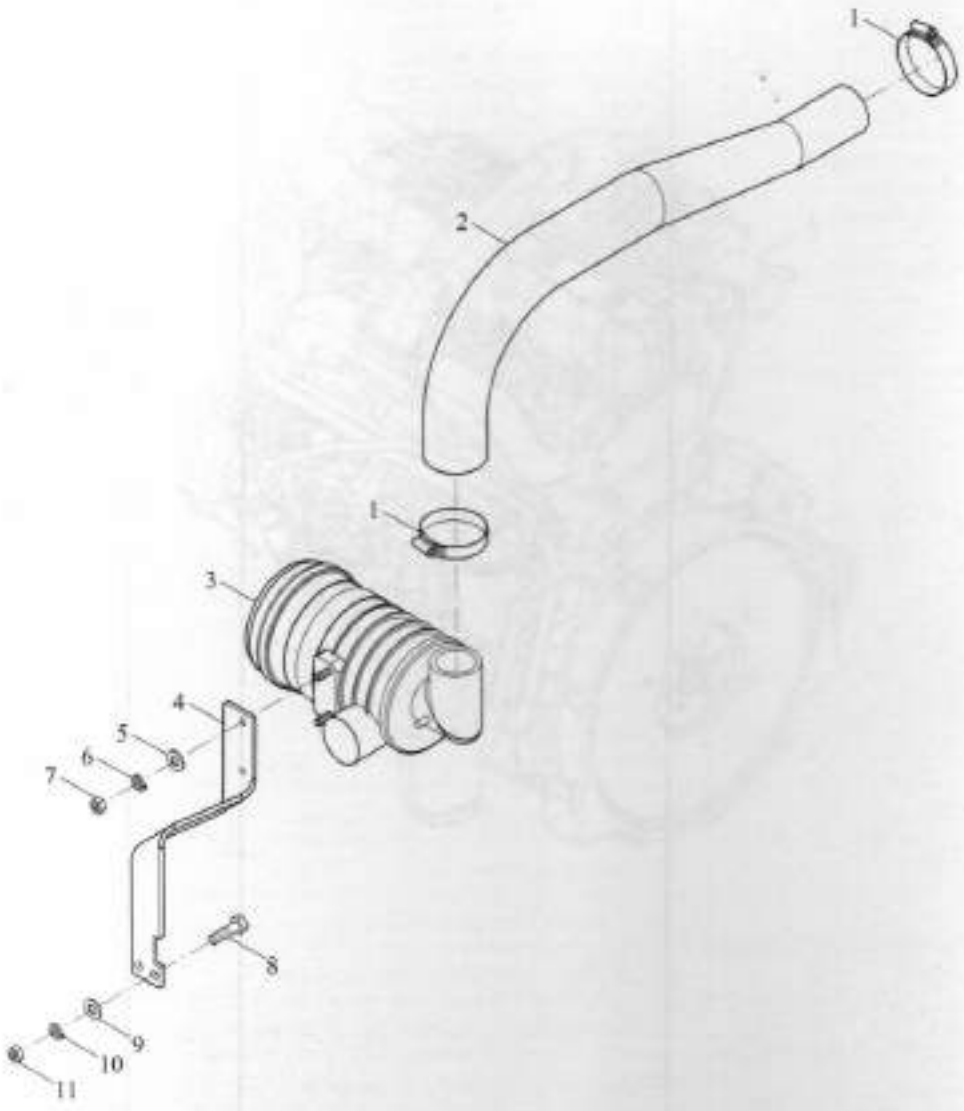

TL01110060000K Air filter assembly(001)

No.	Part code and specification	Part name	Quantity	Remark
	TL01110060000K	Air filter assembly	1	
1	Q67676	B type worm drive hose ring	2	
2	TL01110060001K	Intake hose	1	
3	TE250.11F.1	Air filter assembly	1	
4	TE320.11B-02	Air filter mounting plate	1	
5	GBT97.1-8-A3L	Flat washer	2	
6	GBT93-8-A3L	Normal type single coil spring lock washers	2	
7	GBT6170-M8-8-A2L	Type I hexagon nut	2	
8	GBT5783-M10X30-8.8-A3L	Hexagon headed bolt	2	
9	GBT97.1-10-A3L	Flat washer	2	
10	GBT93-10-A3L	Normal type single coil spring lock washers	2	
11	GBT6170-M10-8-A3L	Type I hexagon nut	2	

TE354.13 Cooling system assembly

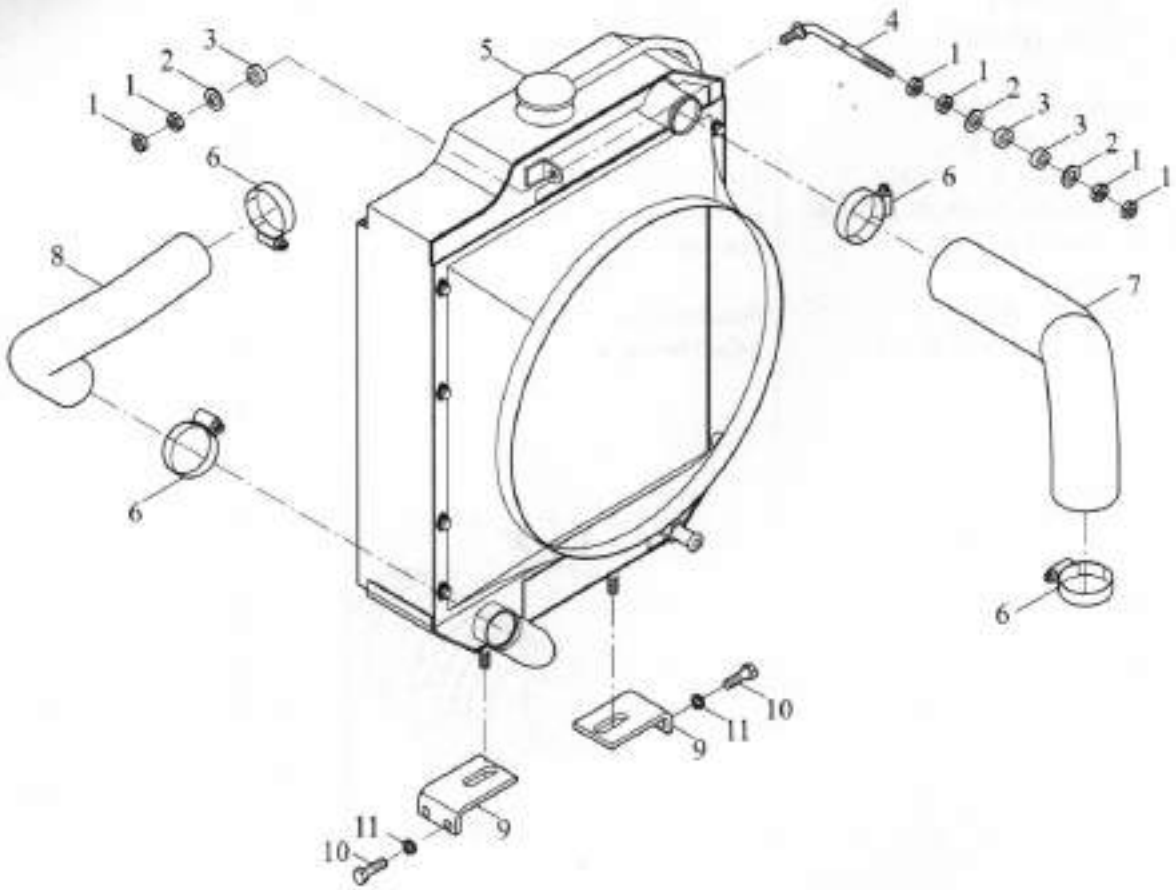

TE354.13 Cooling system assembly

No.	Part code and specification	Part name	Quantity	Remark
	TE354.13	Cooling system assembly	1	
1	GBT6172.1-M8-04-A2L	Six angle thin nut	6	
2	GBT97.1-8-A0P	Plain washer	3	
3	FT650.13.135	Rubber pad	3	
4	TE354.13.2	Radiator rod welding	1	
5	TE354.13.1	Radiator assembly	1	
6	Q67657	B type worm drive hose ring	4	
7	TE354.13-01	Plain washer	1	
8	TE250.13-05	Water tank water hose	1	
9	TE250.13B.2	Radiator bracket welding	2	
10	GBT5783-M8X35-8.8-A2L	Hex bolt	4	
11	GBT93-8-A0P	Normal type single coil spring lock washer	4	

TE354.201 Hand throttle Extinction cable assembly(005)

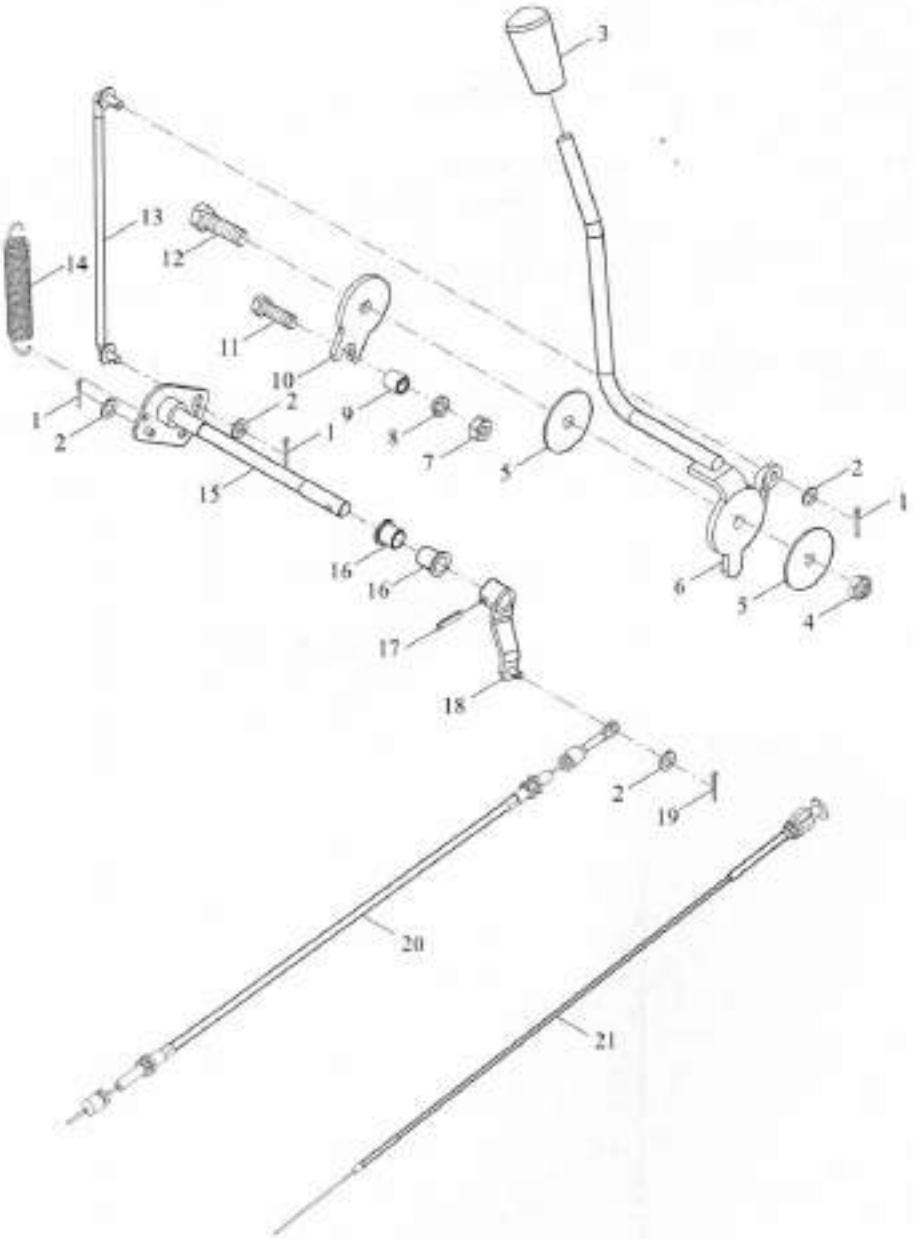

TE354.201 Hand throttle Extinction cable assembly(005)

No.	Part code and specification	Part name	Quantity	Remark
	TE354.201	Hand throttle, stall pull wire assembly (005)	1	
1	GBT91-2X10-A0P	Cotter pin	3	
2	GBT97.1-6-A0P	Plain washer	4	
3	LA754.201-01	Handle	1	
4	GBT1337-M10	Hexagonal self-locking nuts	1	
5	LA754.201-03	Friction plate	2	
6	TE254.201A.2	Rocker welding	1	
7	GBT6170-M8-8-A2L	Type 1 hexagon nut	1	
8	GBT93-8-A0P	Normal type single coil spring lock washer	1	
9	LA754.201-04	Limit sleeve	1	
10	LA754.201-02	Limit plate	1	
11	GBT5783-M8X35-8.8-A2L	Hex bolt	1	
12	GBT5783-M10X40-8.8-A3L	Hex bolt	1	
13	TE254.201A.1a	Pull rod weldment	1	
14	GBT2088-LIIIB-2X16X112	Cylindrical spiral tension spring	1	
15	LA754.201.3	Arm welding	1	
16	LA754.201-05	Nylon bushings	2	
17	GBT879.1-5X20	Elastic cylindrical pin	1	
18	LA754.201.4	Pull the rope arm welding	1	
19	GBT91-2X12-A0P	Cotter pin	1	
20	TE354.201-01	Hand throttle wire assembly	1	
21	FT300.20.018	Stamped wire assembly	1	

TE300.211D Clutch assembly

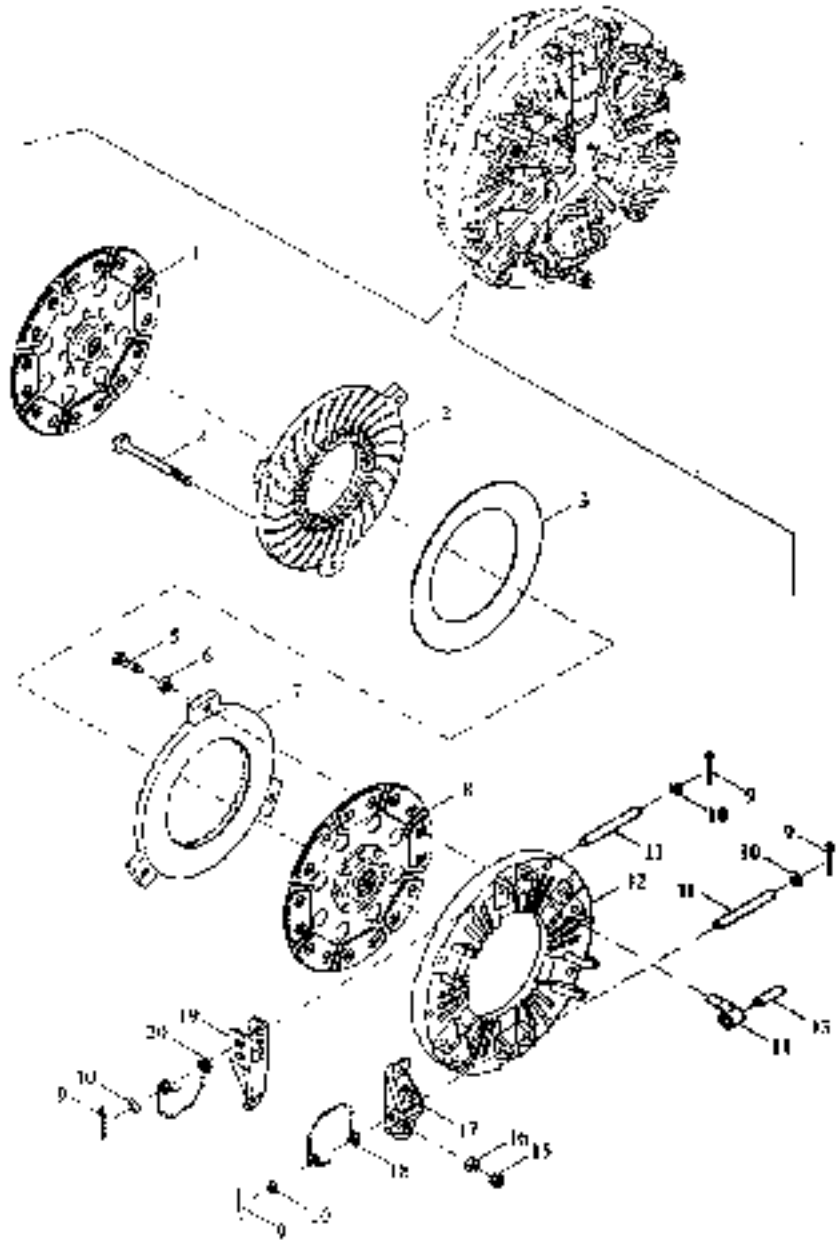

TE300.211D Clutch assembly

No.	Part code and specification	Part name	Quantity	Remark
	TE300.211D	Clutch assembly	1	
1	TE300.211D.2	Vice clutch friction plate assembly	1	
2	FT300.21D.102	Vice clutch pressure plate	1	
3	FT350.21D.103	Disc spring	1	
4	FT300.210.104	Vice clutch cover	3	
5	FT300.210.114	Main clutch adjustment screw	3	
6	GBT6171 M10X1 8 A2L	Type 1 hexagon nut	3	
7	FT300.21B.113	Main clutch plate	1	
8	TE300.211D.1	Main clutch friction plate assembly	1	
9	GBT91-3.2X20-A0P	Cotter pin	12	
10	GBT848 10-A0P	Small washers	12	
11	FT300.21B.111	Long selling	6	
12	FT300.21B.112	Clutch cover	1	
13	FT300.21B.109	Pin	4	
14	FT300.210.110	Mandrel	3	
15	GBT6171-M8X1 -8-A2L	Type 1 hexagon nut	3	
16	FT300.21D.105	Ball seats	3	
17	FT300.21D.106	The secondary clutch separates the lever	3	
18	FT300.21D.120	Separate lever spring	3	
19	FT300.21B.107	Main clutch separation lever	3	
20	FT300.21D.108	Main separation lever spring	3	

TE354.212 Clutch operating mechanism assembly (011)

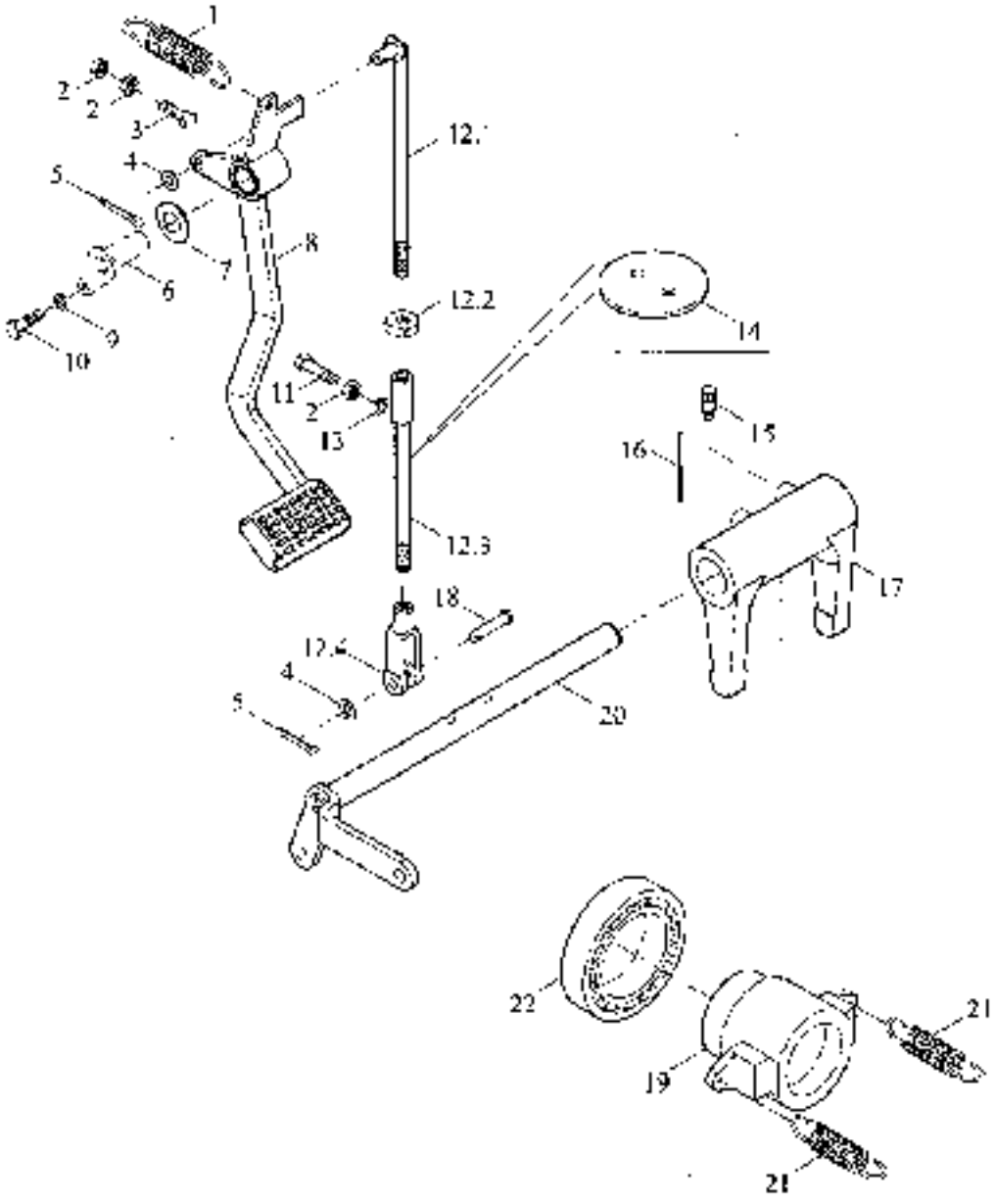

TE354.212 Clutch operating mechanism assembly (011)

No	Part code and specification	Part name	Quantity	Remark
	TE354.212	Clutch control assembly	1	
1	TE250.212D-05	Clutch pedal return spring	1	
2	GB6172.1-M10-04-A3L	Hexagonal nuts	3	
3	GBT5783-M10X40-8.8-A3L	Hex bolt	1	
4	GBT97.1-10-A3L	Plain washer	2	
5	GB91-4.0X22 A3L	Cotter pin	2	
6	TE250.212D-08	Clutch pedal shaft welding	1	
7	TE250.4330-02	Gasket	2	
8	TE250.212D.6	Clutch pedal rocker press	1	
9	GBT93-8-A3L	Normal type single coil spring lock washer	1	
10	GBT5783 M8X16-8.8 A2T	Hex bolt	1	
11	GBT5783-M10X50-8.8- A3L	Hex bolt	1	
12	TE250.212D.5	Rod assembly	1	
12.1	TE250.212D.3	Clutch on the clutch	1	
12.2	GB6171-M10X1-8-A2L	Type 1 hexagon nut	2	
12.3	TE250.212D.4	Clutch rod welding	1	
12.4	FT300.43.110	Rod after fork	1	
13	GB293-10-A3L	Normal type single coil spring lock washer	1	
14	TE250.212D-04	Rubber seal plate	1	
15	FT65.37.109	Stop screw	2	
16	TE250.212-05	Low carbon steel wire SZ-1.2	2	
17	FT200.21.107	Clutch fork	1	
18	GBT882 B10X30-A3L	Pin	2	
19	TE300.212D-01	Separate bearing housing	1	
20	TE250.212D.7	Clutch separation rocker welding	1	
21	FT200.21.106	Separate bearing seat return spring	2	
22	TA600.212-02	Separation bearing 996719	1	

TE350.22C Exhaust system assembly(002)

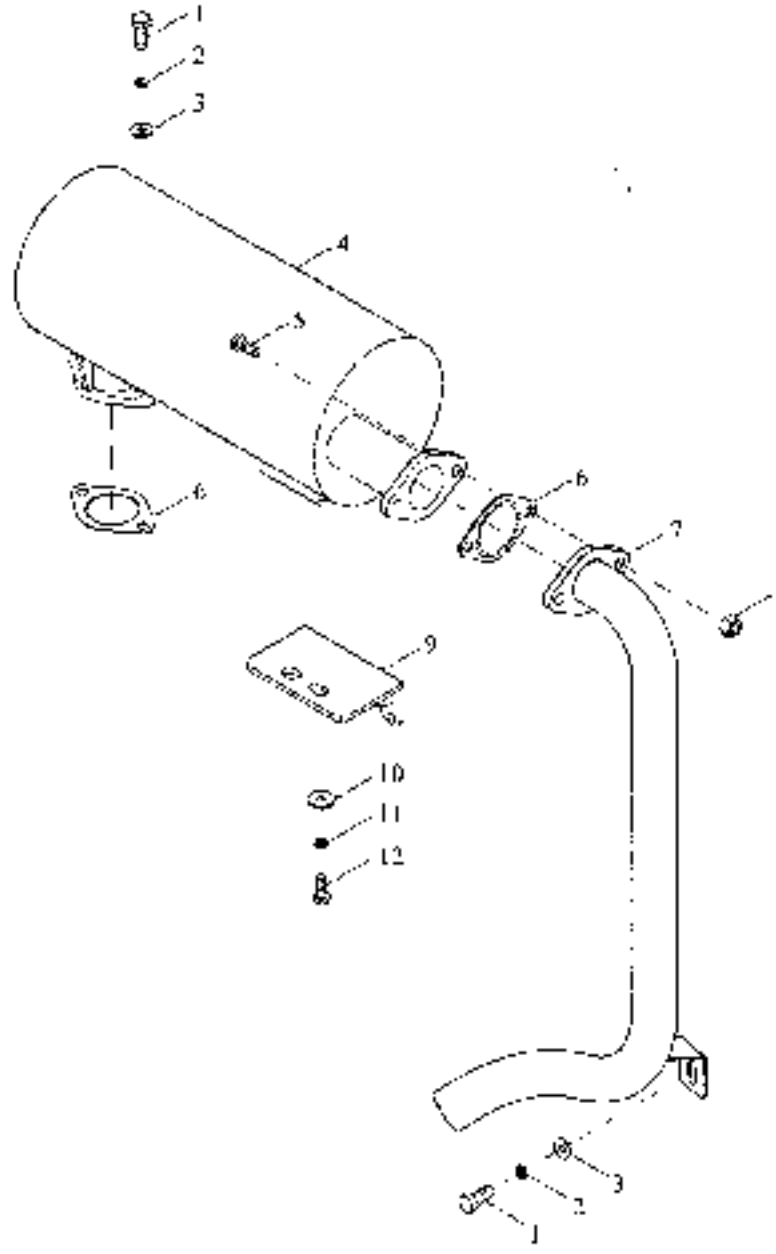

TL02311010000 Front drive axle assembly-1

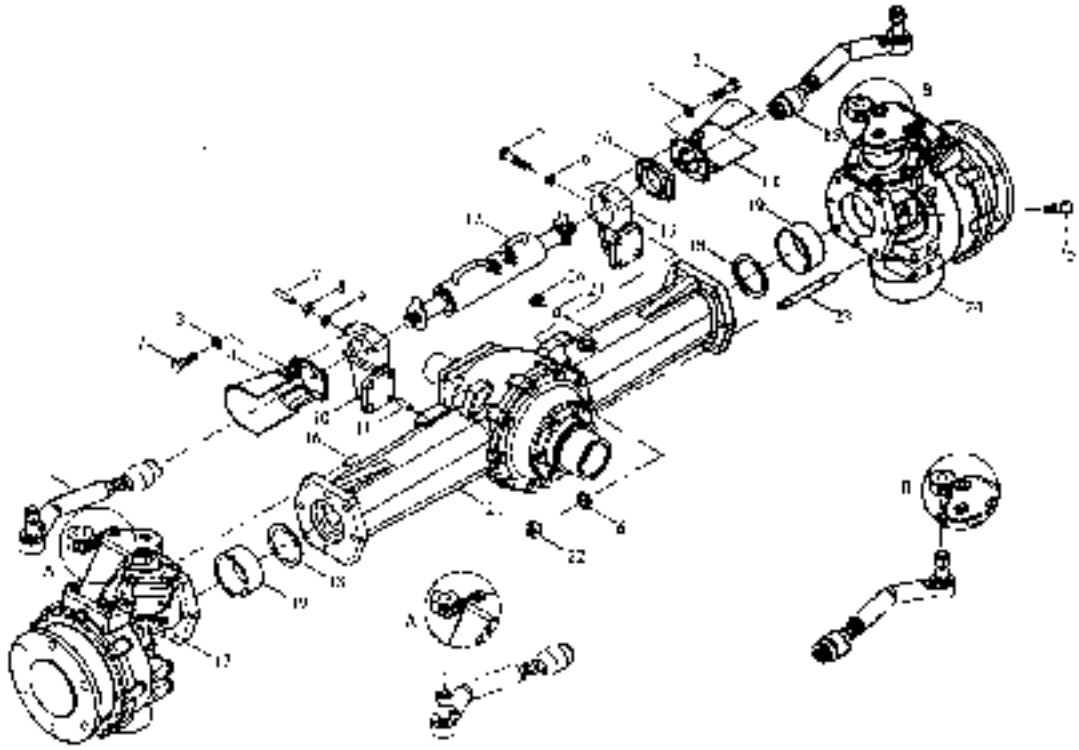

TL02311010000 Front drive axle assembly–1

No.	Part code and specification	Part name	Quantity	Remark
	TL02311010000	Front axle assembly	1	
	TL02311010001	Front drive axle assembly	1	
1	TL02311010007	Left turn cable assembly	1	
2	GB/T 5783–M8 × 20–8.8–A2L	Hex bolt	8	
3	GB/T 93–8–A0P	Normal type single coil spring lock washer	8	
4	TL02311020008	Cylinder cover welding (left)	2	
5	GB/T 5783–M10 × 25–8.8–A3L	Hex bolt	10	
6	GB/T 93–10–A0P	Normal type single coil spring lock washer	12	
7	GB/T 71–M6 × 20–14H	Slotted tapered screw	1	
8	GB/T 6174–M6–110HV30–A2L	Hexagonal nuts	1	
9	GB/T 93–6–A0P	Normal type single coil spring lock washer	1	
10	TL02311010013	Cylinder holder II	1	
11	GB/T 119.1–6h8 × 14–A0P	Round pin	4	
12	TL02311010006	Hydraulic cylinder assembly	1	
13	TL02311010012	Cylinder holder	1	
14	TL02311020009	Cylinder cover welding (right)	1	
15	TL02311010008	Right turn to the tie rod assembly	1	
16	GB/T 119.1–10h8 × 20–A0P	Round pin	4	
17	TL02311010004	Left drive assembly	1	
18	TL02311010010	Adjust the pad	Ordered	
19	TL02311010009	Positioning sleeve	2	
20	TL02311010011	Seat cover	1	
21	TL02311010003	Main gearbox assembly	1	
22	GB/T 6171–M10 × 1.25–8–A2L	Type 1 hexagon nut	12	
23	GB/T 89–[illegible]	Stud studs	12	
24	TL02311010005	Right drive assembly	1	
25	TL02311020010	Limit bolts	2	
26	QS17B14	Hex head plug	2	
27	JB/T 982–14	Combined sealing washer	2	

TL02311010000 Front drive axle assembly-2

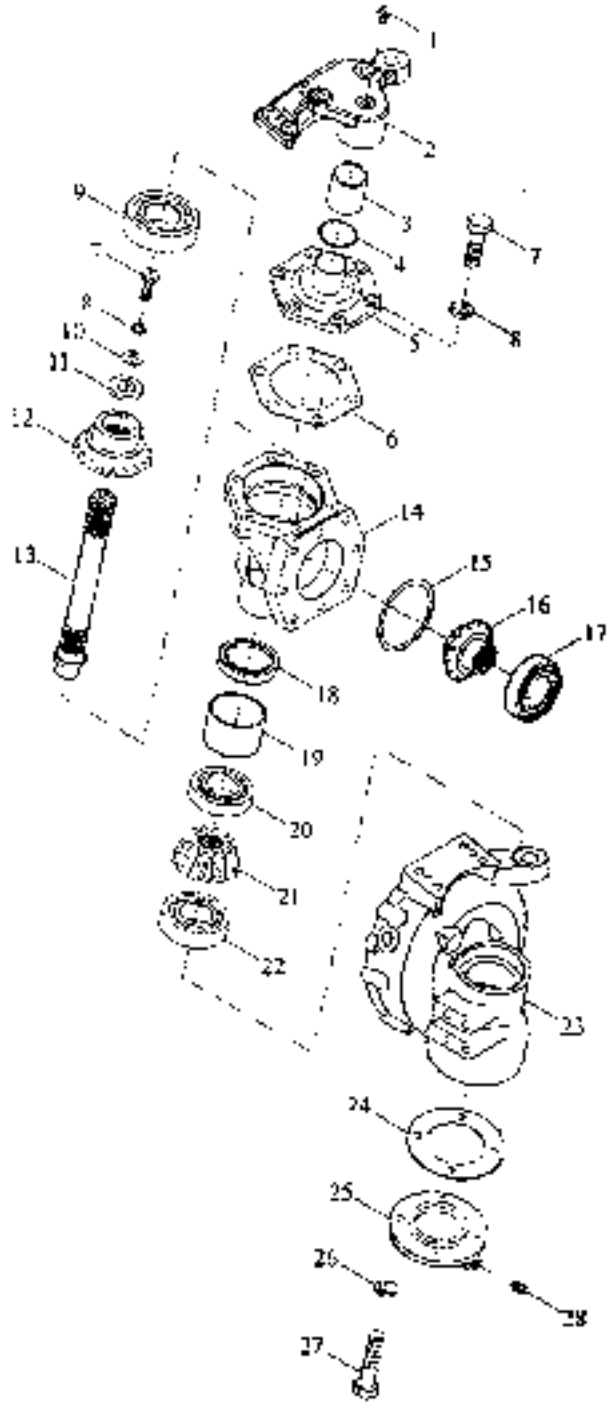

TL02311010000 Front drive axle assembly-2

No.	Part code and specification	Part name	Quantity	Remark
	TL02311010000	Front axle assembly	1	
	TL02311010001	Front drive axle assembly	1	
	TL02311010004	Left drive assembly	1	
	TL02311010005	Right drive assembly	1	
1	JB/T 7940.1-M10 × 1	Straight hydraulic grease nipple	1	
2	TL02311010055	Left turn support	1	
	TL02311010062	Right turn support	1	
3	TL02311010060	Sliding sleeve 35 × 39 × 90	1	
4	GB/T 3452.1-33.5 × 3.55G	Pneumatic O-ring rubber seals	1	
5	TL02311010041	Steering axle seat	1	
6	TL02311010029	Gasket	0.1 mm	
7	GB/T 5783-M10 × 25-8.8-A3F	Hex bolt	7	
8	GB/T 93-10-A3P	Normal type single coil spring lock washer	7	
9	GB/T 276-6210	Deep groove ball bearings	1	
10	GB/T 96.1-10-A3P	Plain washer	1	
11	TL02311010042	Pad	1	
12	TL02311010044	Axle gears	1	
13	TL02311010050	End pin	1	
14	TL02311010056	Steering gear housing	1	
15	GB/T 3452.1-80.0 × 2.65G	Pneumatic O-ring rubber seals	1	
16	TL02311010038	Axle pinion	1	
17	GB/T 276-6207	Deep groove ball bearings	1	
18	TL02311010045	Dust ring	1	
19	TL02311010051	Sliding sleeve 50 × 55 × 35	1	
20	GB/T 301-51106	Thrust ball bearings	1	
21	TL02311010057	Terminal pinion	1	
22	GB/T 276-6205	Deep groove ball bearings	1	
23	TL02311010058	Left end shell	1	
	TL02311010066	Right end shell	1	
24	TL02311010049	Adjust the pad	0.1 mm	
25	TL02311010048	Bottom cover	1	
26	GB/T 93-6-A3F	Normal type single coil spring lock washer	4	
27	GB/T 5783-M6 × 20-8.8-A2L	Hex bolt	4	
28	06141001	Square head conical plug	1	

TL02311010000 Front drive axle assembly-3

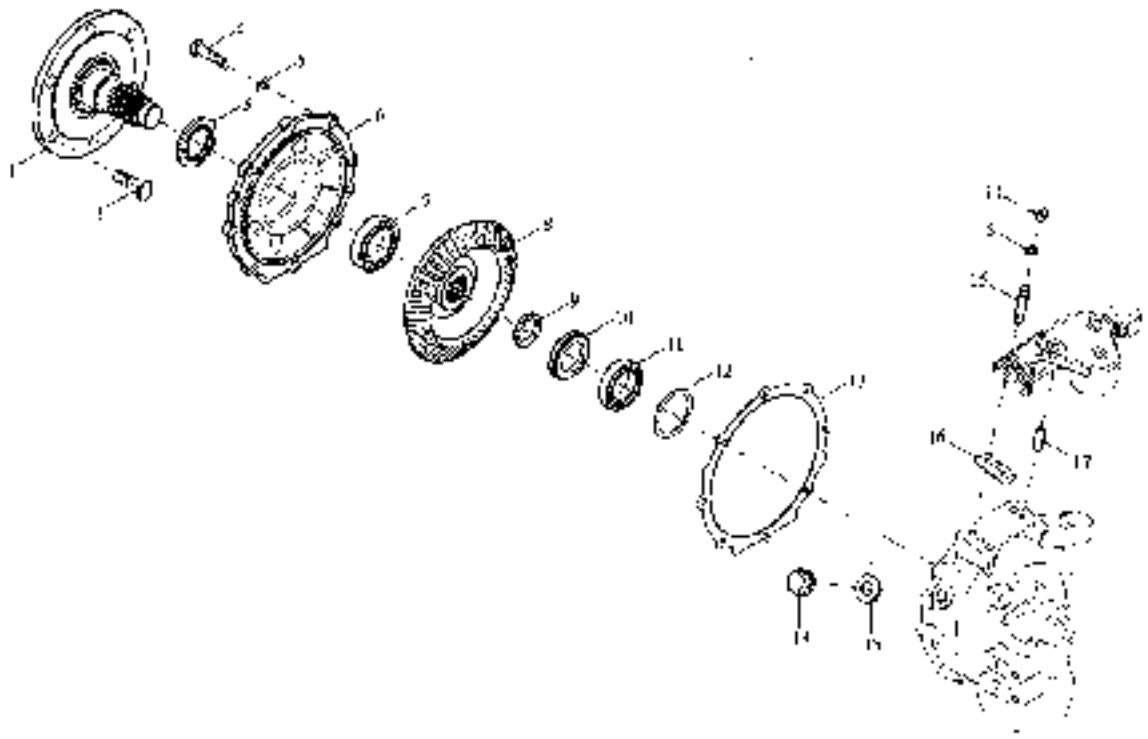

TL02311010000 Front drive axle assembly–3

No.	Part code and specification	Part name	Quantity	Remark
	TL02311010000	Front axle assembly	1	
	TL02311010001	Front drive axle assembly	1	
	TL02311010004	Left drive assembly	1	
	TL02311010005	Right drive assembly	1	
1	TL02311010061	Front drive shaft	1	
2	TL02311010054	Knurled bolts	6	
3	TL02311010064	Oil seal	1	
4	GB/T 5783–M10×30–8.8–A3L	Hex bolt	8	
5	GB/T 93–10–A0P	Normal type single coil spring lock washer	12	
6	TL02311010059	End cap cover	1	
7	GB/T 276–6308	Deep groove ball bearings	1	
8	TL02311010060	Terminal gears	1	
9	TL02311010062	Wire ring	1	
10	TL02311010063	Locating ring	1	
11	GB/T 276–6206	Deep groove ball bearings	1	
12	TL02311010047	Adjust the pad	Ordered	
13	TL02311010046	Adjust the pad	Ordered	
14	GB/T 6171–M10×1.25–8–A2I	Type 1 hexagon nut	4	
15	GB/T 799–M10–M8×125×35–8.8–A2L	Stud studs	4	
16	TL02311010043	Adjust the pad	Ordered	
17	GB/T 119.2–8×20–A0P	Round pin	2	
18	TL02311010052	Plug plug	1	
19	TL02311010053	Washer	1	

TL02311010000 Front drive axle assembly-4

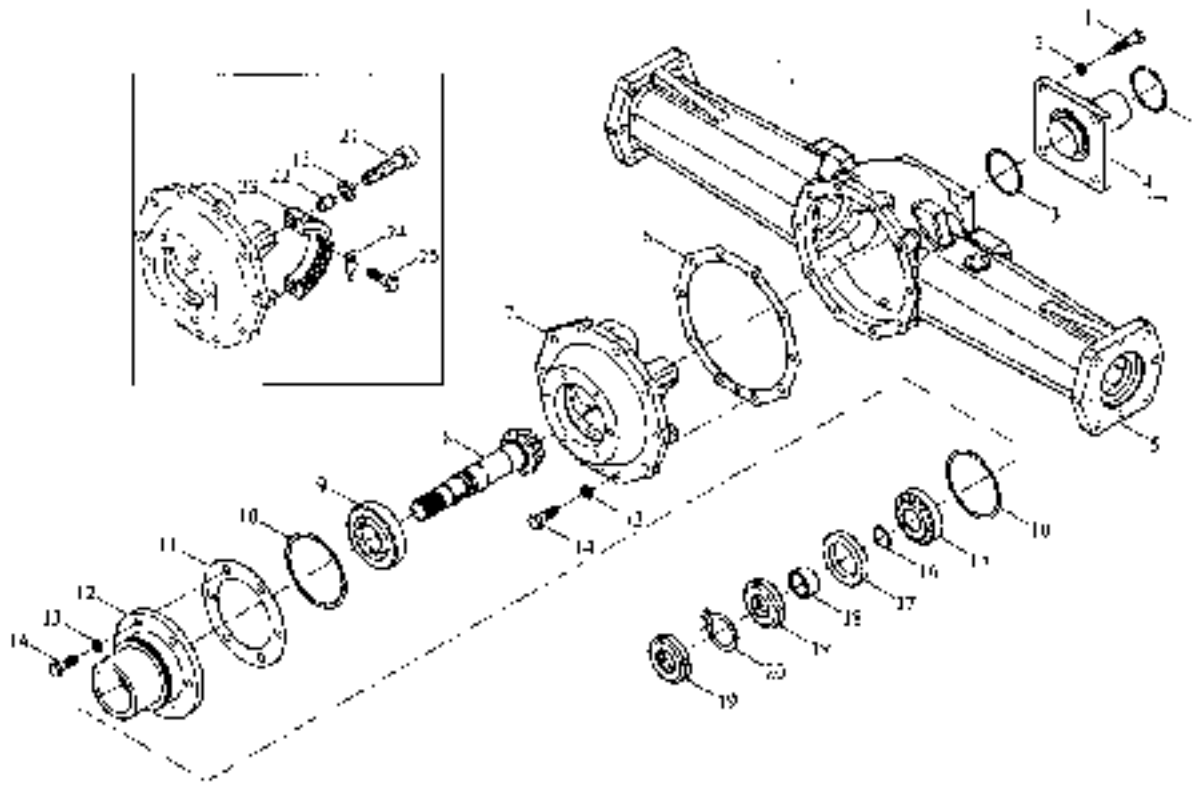

TL02311010000 Front drive axle assembly-4

No	Part code and specification	Part name	Quantity	Remark
	TL02311010080	Front axle assembly	1	
	TL02311010081	Front drive axle assembly	1	
	TL02311010003	Main gearbox assembly	1	
1	GB/T 5783-M12×30-8.8-A3L	Hex bolt	4	
2	GB/T 93-12-A0P	Normal type single coil spring lock washer	4	
3	GB/T 3452.1-63.0×3.55G	Pneumatic O ring rubber seals	2	
4	TL02311010036	Front support shaft	1	
5	TL02311010037	Main gearbox housing	1	
6	TL02311010023	Adjust the pad	1	
7	TL02311010035	Differential bearing	1	
8	TL02311010029	Inter the bevel gear shaft	1	
9	GB/T 297-31306	Tapered roller bearing	1	
10	GB/T 3452.1-73.0×3.55G	Pneumatic O ring rubber seals	2	
11	TL02311010018	Adjust the pad	On demand	
12	TL02311010034	Rear support shaft	1	
13	GB/T 93-10-A0P	Normal type single coil spring lock washer	18	
14	GB/T 5783-M10×30-8.8-A3L	Hex bolt	16	
15	GB/T 297-32006	Tapered roller bearing	1	
16	GB/T 3452.1-71.6×3.55G	Pneumatic O ring rubber seals	1	
17	GB/T 9877.1-FB35×55×8B	Lip-shape seal ring	1	
18	TL02311010021	Oil seal bushing	1	
19	GB/T 810-M27×1.5	Small round nut	2	
20	GB/T 858-27	Circular washers for nuts	1	
21	GB/T 70.1-M10×40-8.8	Hexagon socket cap head screw	2	
22	TL02311010016	Positioning sleeve	2	
23	TL02311010022	Bearing fixing sleeve	1	
24	TL02311010024	Stop gasket	1	
25	GB/T 5783-M8×16-8.8-A2L	Hex bolt	1	

TL02311010000 Front drive axle assembly-5

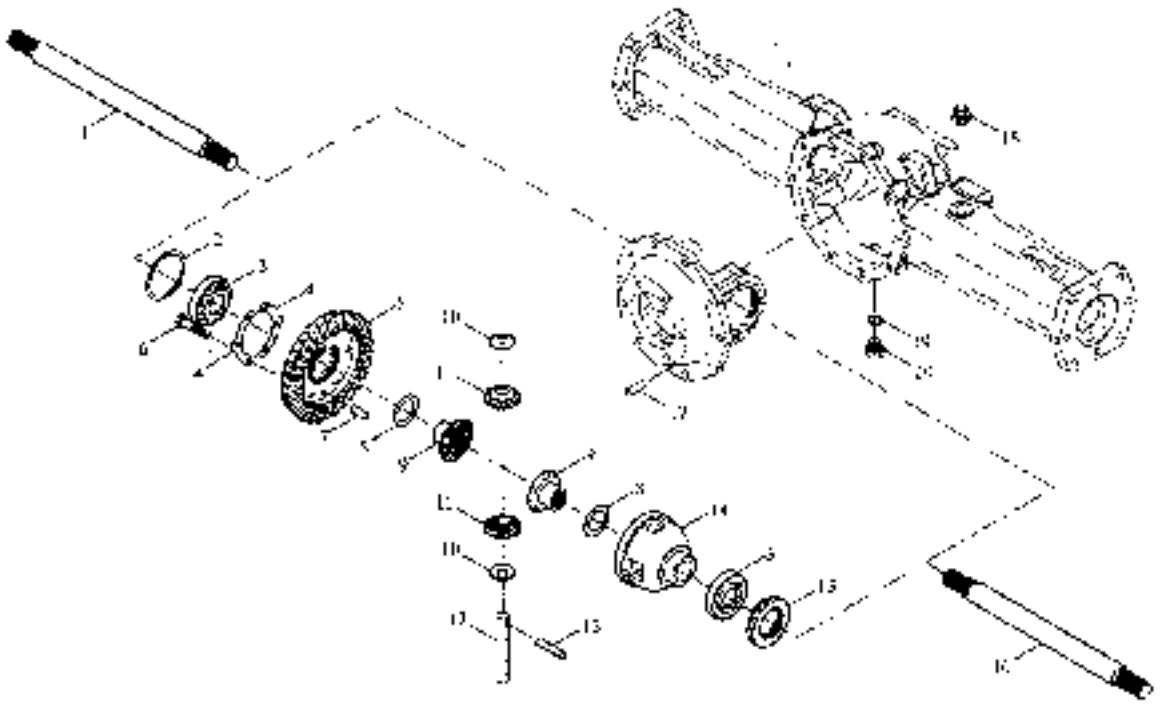

TL02311010000 Front drive axle assembly-5

No.	Part code and specification	Part name	Quantity	Remark
	TL02311010000	Front axle assembly	1	
	TL02311010001	Front drive axle assembly	1	
	TL02311010003	Main gearbox assembly	1	
1	TL02311010028	Left half axle	1	
2	TL02311010014	Adjust the pad	On demand	
3	GB/T 297-32009	Tapered roller bearing	2	
4	TL02311010015	Stop gasket	2	
5	TL02311010017	Big bevel gears	1	
6	GB/T 5783-M8 × 25-8.8-A2L	Hex bolt	6	
7	GB/T 119.2-8 × 20-A0P	Round pin	1	
8	TL02311010026	Plain washer	2	
9	TL02311010032	Differential gears	2	
10	TL02311010031	Spherical washers	2	
11	TL02311010027	Planetary gear	2	
12	TL02311010019	Differential pin	1	
13	GB/T 119.1-8m6 × 40-A0P	Round pin	1	
14	TL02311010030	Differential case	1	
15	TL02311010020	Adjust the nut	1	
16	TL02311010033	Right half axle	1	
17	GB/T 119.2-8 × 18-A0P	Round pin	1	
18	TL02311010025	Steel balloon plug	1	
19	TL02311010072	Washer	1	
20	Q617B12	Hex head plug	1	

TL02311010000 Front drive axle assembly–6

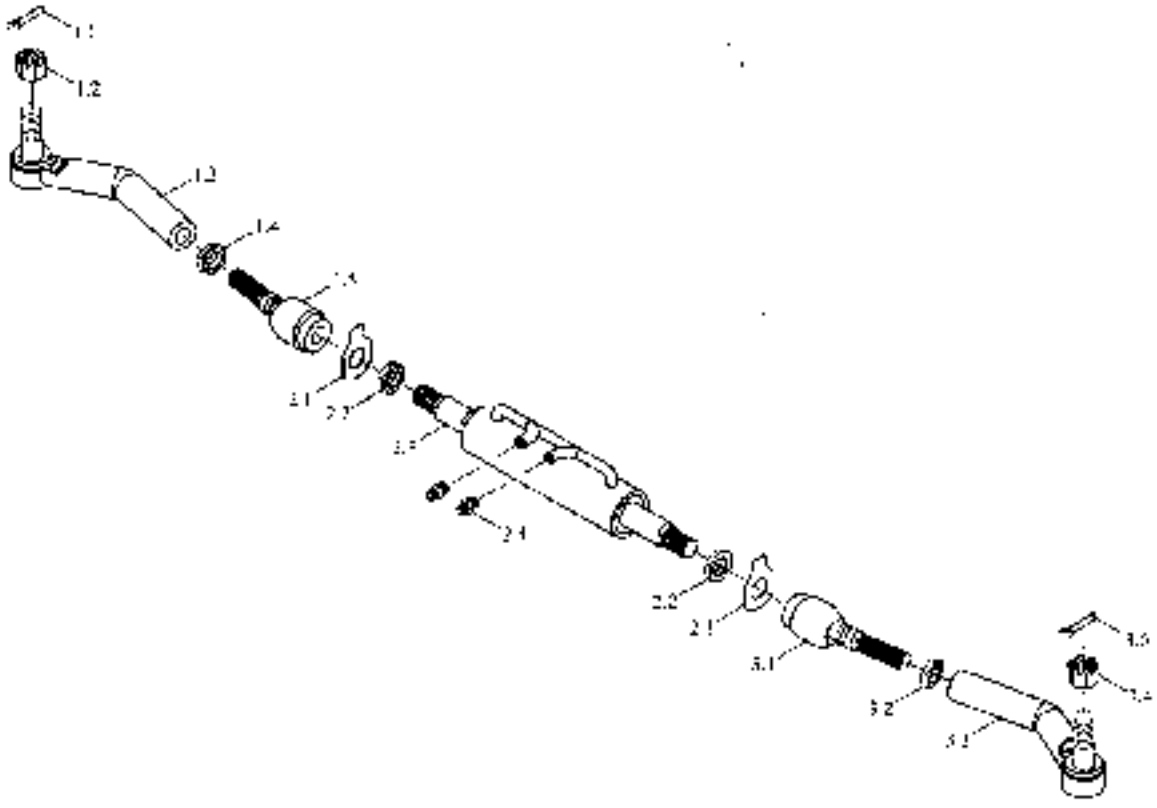

TL02311010000 Front drive axle assembly-6

No.	Part code and specification	Part name	Quantity	Remark
	TL02311010000	Front axle assembly	1	
	TL02311010001	Front drive axle assembly	1	
1	TL02311010007	Left turn cable assembly	1	
1.1	GB/T 91-3.2 x 28-A0F	Cotter pin	1	
1.2	GB/T 9458-M14 x 1.5-8	Type 2 hexagonal slotted nut	1	
1.3	TL02311010070	Left rocker joint assembly	1	
1.4	GB/T 6173-M18 x 1.5-05-A3L	Hexagonal nuts	1	
1.5	TL02311010069	Cylinder connector assembly	1	
2	TL02311010006	Hydraulic cylinder assembly	1	
2.1	GB/T 854-20	Single ear stop washer	2	
2.2	TL02311010068	Fasten the screw nut	2	
2.3	TL02311010067	Hydraulic cylinder	1	
2.4	TL02311010073	Fittings	2	
3	TL02311010008	Right turn to the tie rod assembly	1	
3.1	TL02311010066	Cylinder connector assembly	1	
3.2	GB/T 6173-M18 x 1.5-05-A3L	Hexagonal nuts	1	
3.3	TL02311010071	Right rocker joint assembly	1	
3.4	GB/T 9458-M14 x 1.5-8	Type 2 hexagonal slotted nut	1	
3.5	GB/T 91-3.2 x 28-A0P	Cotter pin	1	

TL02312010000K Bracket assembly (001)

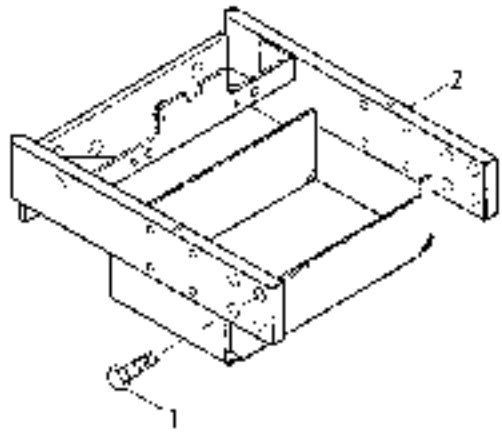

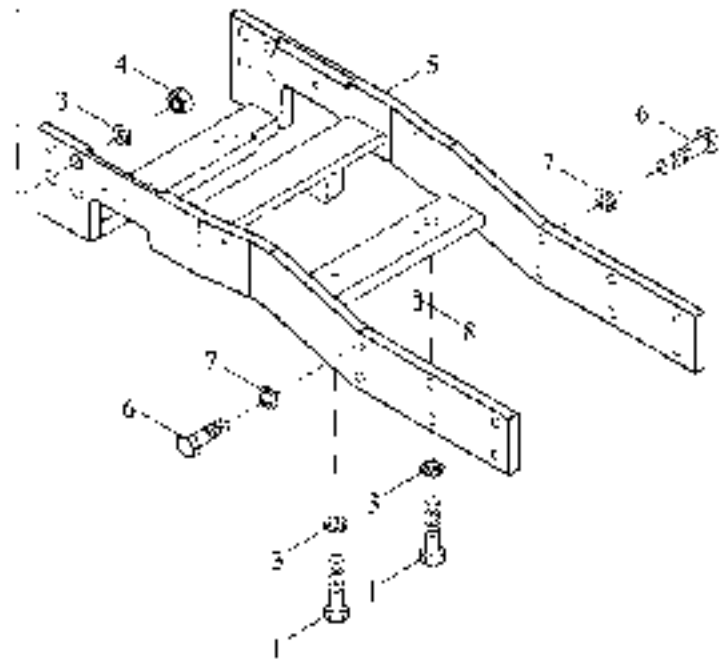

TL02312010000K Bracket assembly (001)

No.	Part code and specification	Part name	Quantity	Remark
	TL02312010000K	Bracket assembly (001)	1	
1	GBT5783–M16X55–8.8–A3L	Hex bolt	12	
2	TL02312030001K	Battery mounting bracket welding	1	
3	GB/93–16–A0P	Normal type single coil spring lock washer	12	
4	GBT6170–M16–8–A3L	Type 1 hexagon nut	8	
5	TL02312010001K	Half-frame welding	1	
6	GBT5782–M12X35–8.8–A3L	Hex bolt	7	
7	GBT93–12–A0P	Normal type single coil spring lock washer	7	
8	GBT119.2–8X20–A0P	Cylindrical pin	4	

TE254.313G Front support assembly (002)

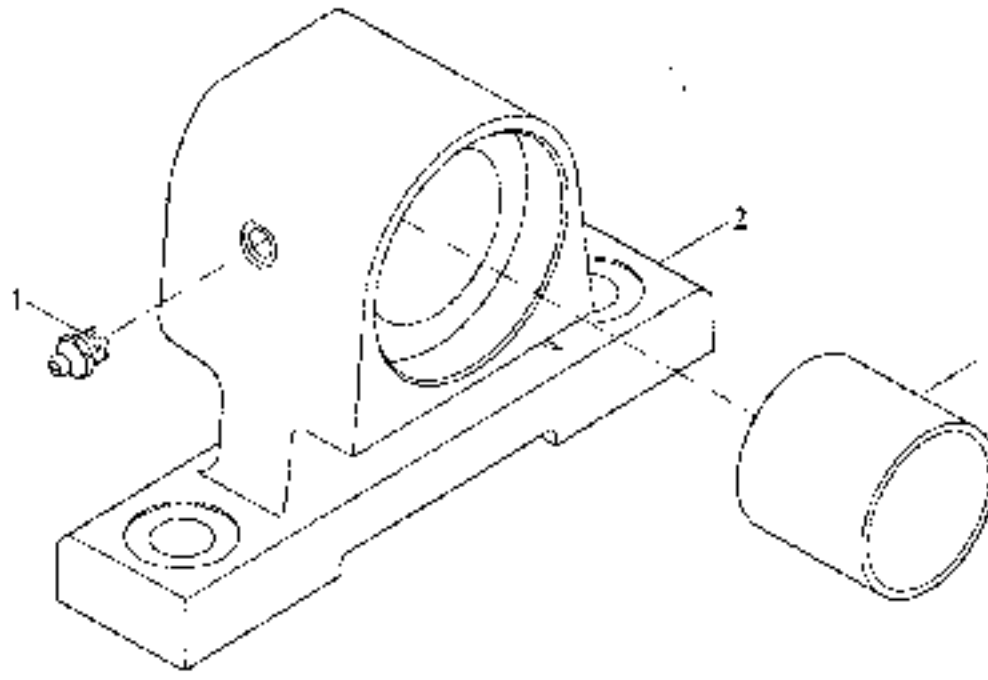

TE254.313G Front support assembly (002)

No.	Part code and specification	Part name	Quantity	Remark
	TE254.313G	Front support set assembly	1	
1	JB170403-M10X1	Straight hydraulic grease nipple	1	
2	TE254.313G-01	Front support seat	1	
3	FT254.313G.136	Shifting sleeve 45X50X45	1	

TE254.314G Rear support assembly (002)

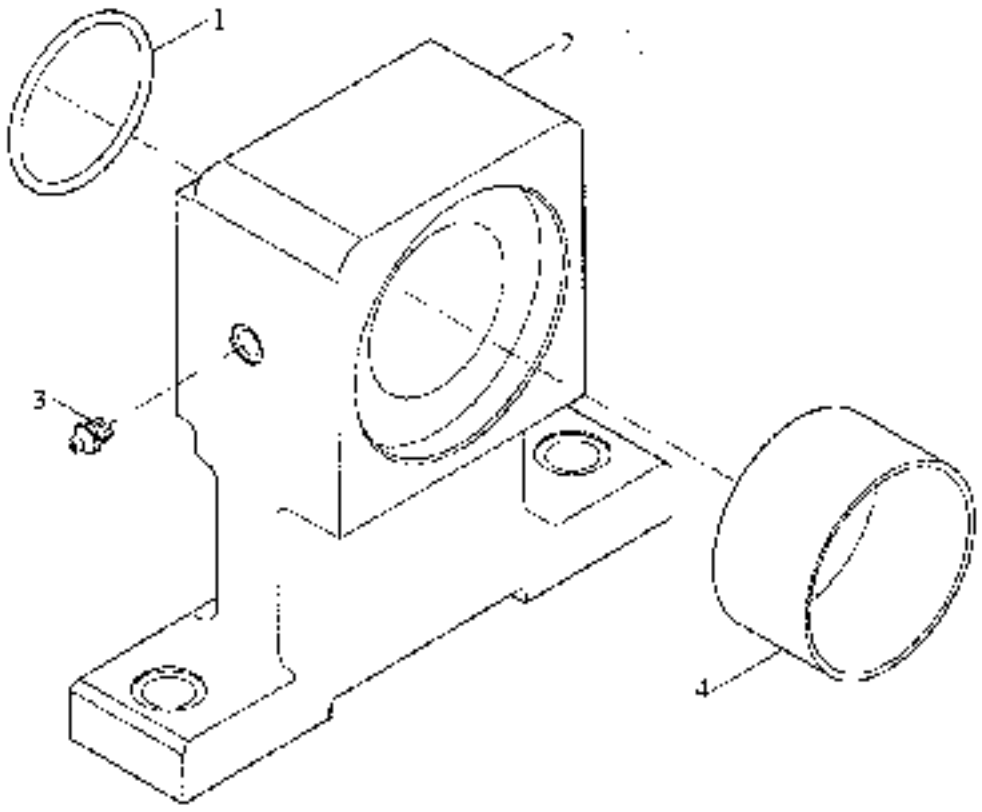

TE254.314G Rear support assembly (002)

No.	Part code and specification	Part name	Quantity	Remark
	TE254.314G	Rear support seat assembly	1	
1	GBT3452.1 54.5X3.55G	Pneumatic O – ring rubber seals	1	
2	TE254.311B.1-01	Rear support stand	1	
3	JB/T7940.1 M10X1	Straight hydraulic grease nipple	1	
4	JF254.311.129	Sliding sleeve 70X75X40	1	

TE300.35 Traction device assembly

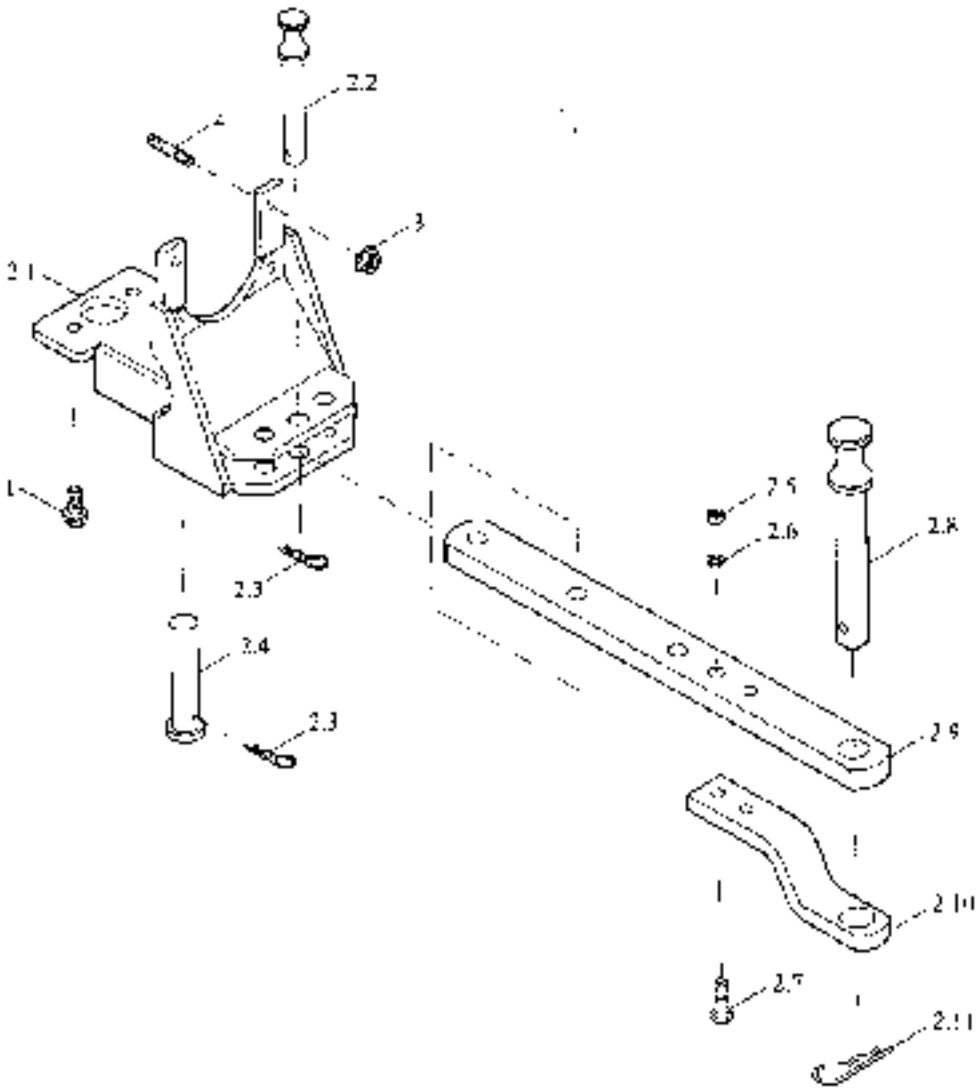

TE300.35 Traction device assembly

No.	Part code and specification	Part name	Quantity	Remark
	TE300.35	Traction assembly assembly	1	
1	GB/T 16674.1-M12×30-10.9-A2L	Hexagonal flange bolts	2	
2	TE300.35.2	Traction device assembly	1	
2.1	TE300.35.2.1	Traction frame welding	1	
2.2	PT250.35.103	Limit arm	1	
2.3	PT165.35.105	Elastic locking pin	2	
2.4	PT250.35.101	Connecting pin	1	
2.5	GB/T 6170-M16 A3L	Nuts	2	
2.6	GB/T 93-16-A0P	Washer	2	
2.7	GB/T 5782-M16×80 A3L	Bolt	2	
2.8	PT300.35A.105	Pendulum	1	
2.9	TE300.35.2-01	Swing rod	1	
2.10	PT300.35A.101	Connecting pendulum	1	
2.11	PT300.35.112	Elastic locking pin	1	
3	SPL-GB-M12-10-F3	Hexagonal flange nuts	4	
4	GB/T 899-GM12-M12×32-8.8-A3L	Studs	4	

TE354.361T Shuttle shift assembly-1 (005)

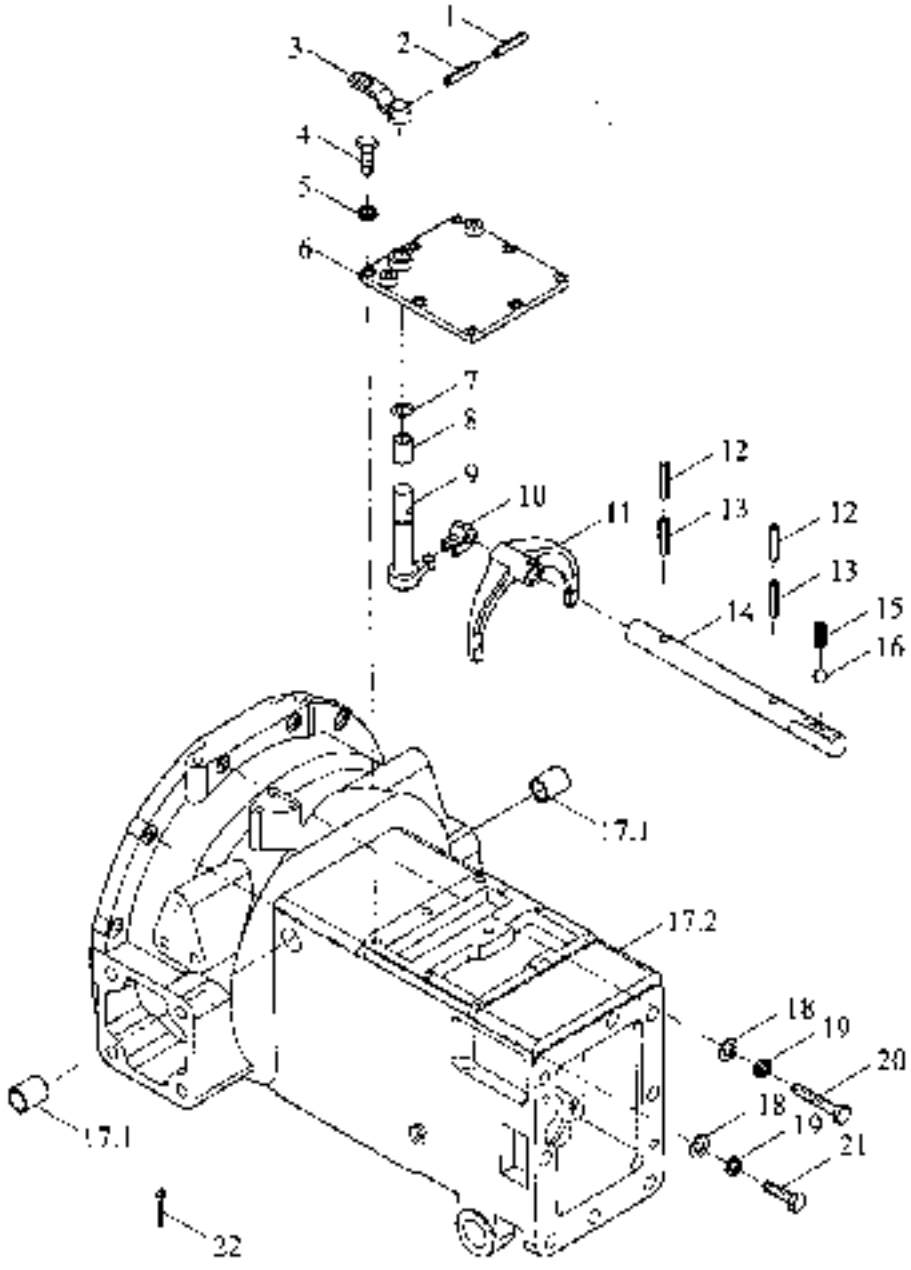

TE354.361T Shuttle shift assembly-1 (005)

No.	Part code and specification	Part name	Quantity	Remark
	TE354.361T	Shuttle gear assembly	1	
1	GBT879.1-4X28	Elastic cylindrical pin	1	
2	GBT879.1 6X28	Elastic cylindrical pin	1	
3	TE250.361M.2	Manipulate rocker welding	1	
4	GBT5783 M8X25 8.8 A2L	Hex bolt	8	
5	GBT93 8	Normal type single coil spring lock washer	11	
6	TE250.361M 02	Shuttle fix cover	1	
7	GBT3452.1 13.2X2.65G	Pneumatic O ring rubber seals	1	
8	TE250.361M-05	Limit sets	1	
9	TE250.361M-01	Shuttle gear roll arm	1	
10	TE250.361M 04	shuttle gear	1	
11	TE354.361T 06	Shuttle shift fork	1	
12	GBT879.1-3X26	Elastic cylindrical pin	2	
13	GBT879.1-5X26	Elastic cylindrical pin	2	
14	TE354.361T 07	Shuttle shift fork shaft	1	
14	TE354.361T 23	Shuttle shift fork shaft	1	
14	TE354.361T 26	Shuttle shift fork shaft	1	
15	FT250.37.148	The fork shaft locks the spring	1	
16	GBT308-8.731-G200-A	Steel ball	1	
17	TE354.361T.1	Clutch housing is pressed	1	
17.1	FT250.36.109	Rocker shaft shaft bushing	2	
17.2	TE354.361T.1-01	Clutch housing	1	
18	GBT97.1-10-A3L	Plain washer	12	
19	GBT93-10-A3L	Normal type single coil spring lock washer	20	
20	GBT5782-M10X55-8.8-A3L	Hex bolt	4	
21	GBT5783-M10X35 8.8 A3L	Hex bolt	8	
22	GBT91 4X20 A3L	Cotter pin	1	

TE354.361T Shuttle shift assembly-2 (005)

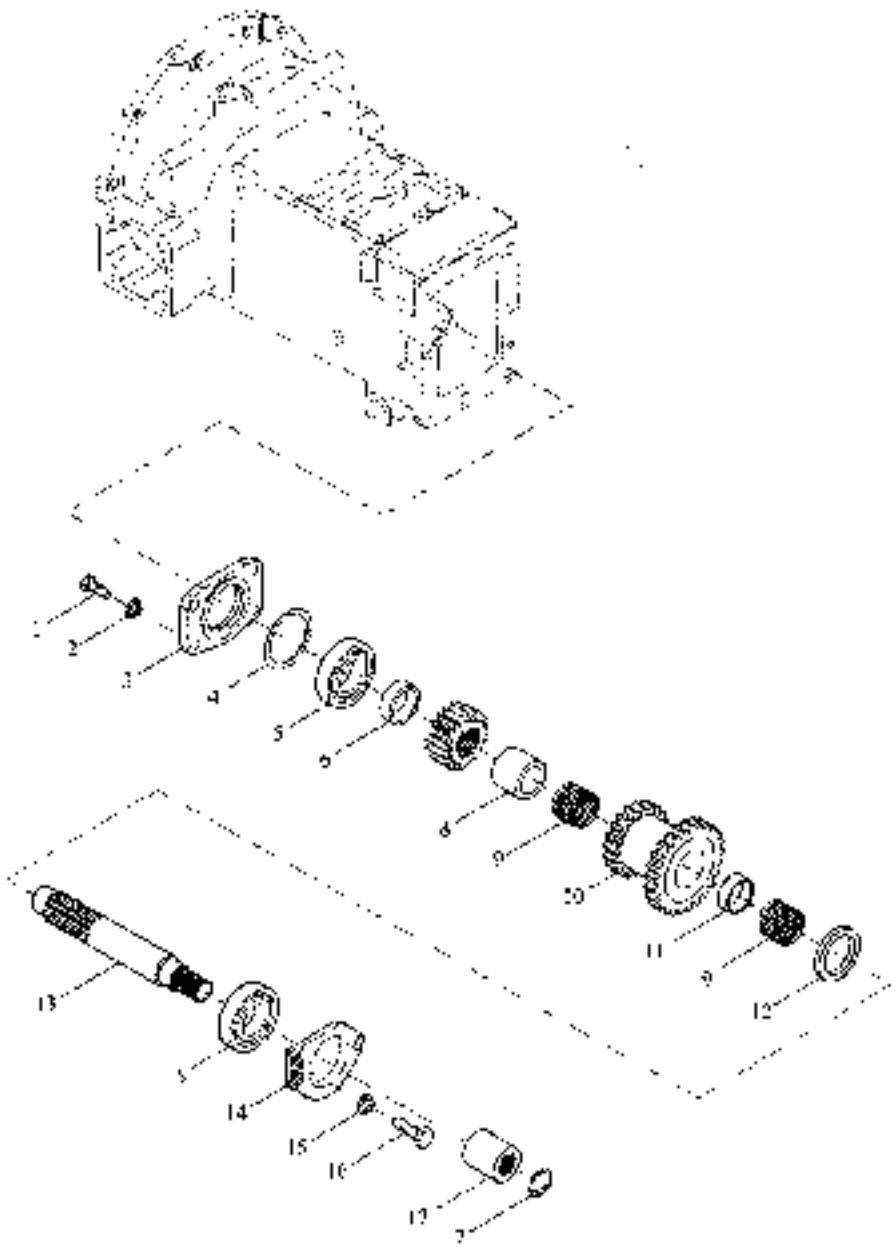

TE354.361T Shuttle shift assembly–2 (005)

No.	Part code and specification	Part name	Quantity	Remark
	TE354.361T	Shuttle gear assembly	1	
1	GBT5783 M10X25 8.8 A2L	Hex bolt	8	
2	GBT93–10–A3L	Normal type single-coil spring lock washer	20	
3	TE250.361F–04	Bearing stand	1	
4	TE250.361F 21	Adjusting washer	1	
5	GBT276 6305	Deep groove ball bearing	2	
6	TE250.361F–05	Sleeves	1	
7	GBT893.1 -18	Circlip for shaft	1	
8	TE354.361T–17	Spacer sleeve	1	
9	GBT20056–K30X35X27	Centering needle roller and cage assembly	2	
10	TE354.361T–01	Shuttle gearshift driven double gear	1	
11	TE354.361T 02	Short bushing	1	
12	TE354.361T 04	Center shaft	1	
13	TE250.361F–12	Shuttle shift intermediate shaft	1	
14	TE250.361F 22	Bearing gland	1	
15	GBT93–8	Normal type single-coil spring lock washer	11	
16	GBT5783–M8X20–8.8–A2L	Hex bolt	5	
17	TE250.361F–13	Spline bushing	1	

TE354.361T Shuttle shift assembly-3 (005)

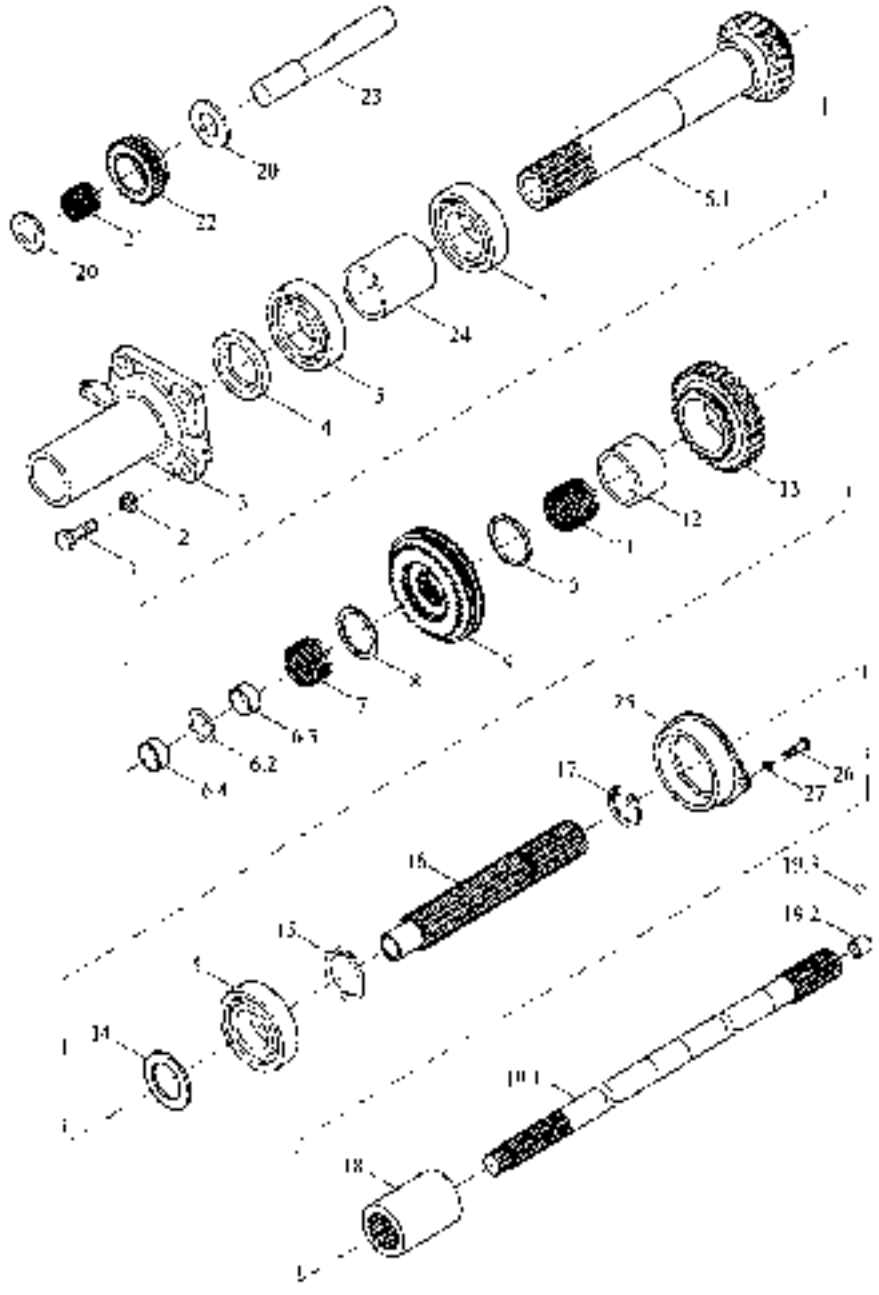

TE354.361T Shuttle shift assembly-3 (005)

No.	Part code and specification	Part name	Quantity	Remark
	TE354.361T	Shuttle gear assembly	1	
1	GBT5783-M10X25-8.8-A2L	Hex bolt	8	
2	GBT93-10-A3L	Normal type single coil spring lock washer	20	
3	TE250.361F-01	Separate bearing seats	1	
4	GBT9877.1-FB35X55X8F	Lip-shape seal ring	1	
5	GBT276-6207	Deep groove ball bearing	3	
6	TE354.361T.2	Shuttle gearshift drive gear shaft assembly	1	
6.1	TE354.361T.2-01	Shuttle gearshaft drive shaft	1	
6.2	TE250.361F.2-03	O-ring	1	
6.3	TE250.361F.2-02	Bushing	1	
6.4	TE250.361F.2-04	Bushing II	1	
7	GBT20056-K28X36X20	Centering needle roller and cage assembly	1	
8	TE354.361T-16	Active shaft retaining ring	1	
9	TE354.361T.3	Synchronizer assembly	1	
10	TE250.361D-13	Needle spacer	1	
11	QLWZB120-K42X48X21	Needle roller bearings	1	
12	TE354.361T-13	Passive gear bushings	1	
13	TE354.361T-03	Shuttle gear shift gear	1	
14	TE354.361T-08	Output shaft retaining ring	1	
14	TE354.361T-21	Output shaft retaining ring	1	
14	TE354.361T-22	Output shaft retaining ring	1	
14	TE354.361T-23	Output shaft retaining ring	1	
14	TE354.361T-24	Output shaft retaining ring	1	
15	GBT894.1-35	Circlip for shaft	1	
16	TE354.361T-14	Shuttle gear output shaft	1	
17	GBT893.1-32	Circlip for hole	1	
18	TE354.361T-15	Output shaft spline sleeve	1	
19	TE354.361T.4	Power output clutch shaft assembly	1	
19.1	TE354.361T.4-01	Power output clutch shaft	1	
19.2	FT250.36B.128	Bushings	1	
19.3	GBT308-11-G100-6	Steel ball	1	
20	TE354.361T-10	Idler ring	2	
21	GBT20056-K20X24X17	Centering needle roller and cage assembly	1	
22	TE354.361T-11	Shuttle gear shift idler	1	
23	TE354.361T-12	Shuttle gear shift shaft	1	
24	TE354.361T-09	Spindle sleeve	1	
25	TE354.361T-05	Spindle sleeve	1	
26	GBT5783-M8X20-8.8-A2L	Hex bolt	5	
27	GBT93-8	Normal type single coil spring lock washer	11	

TE250.362M Shuttle shift control mechanism assembly

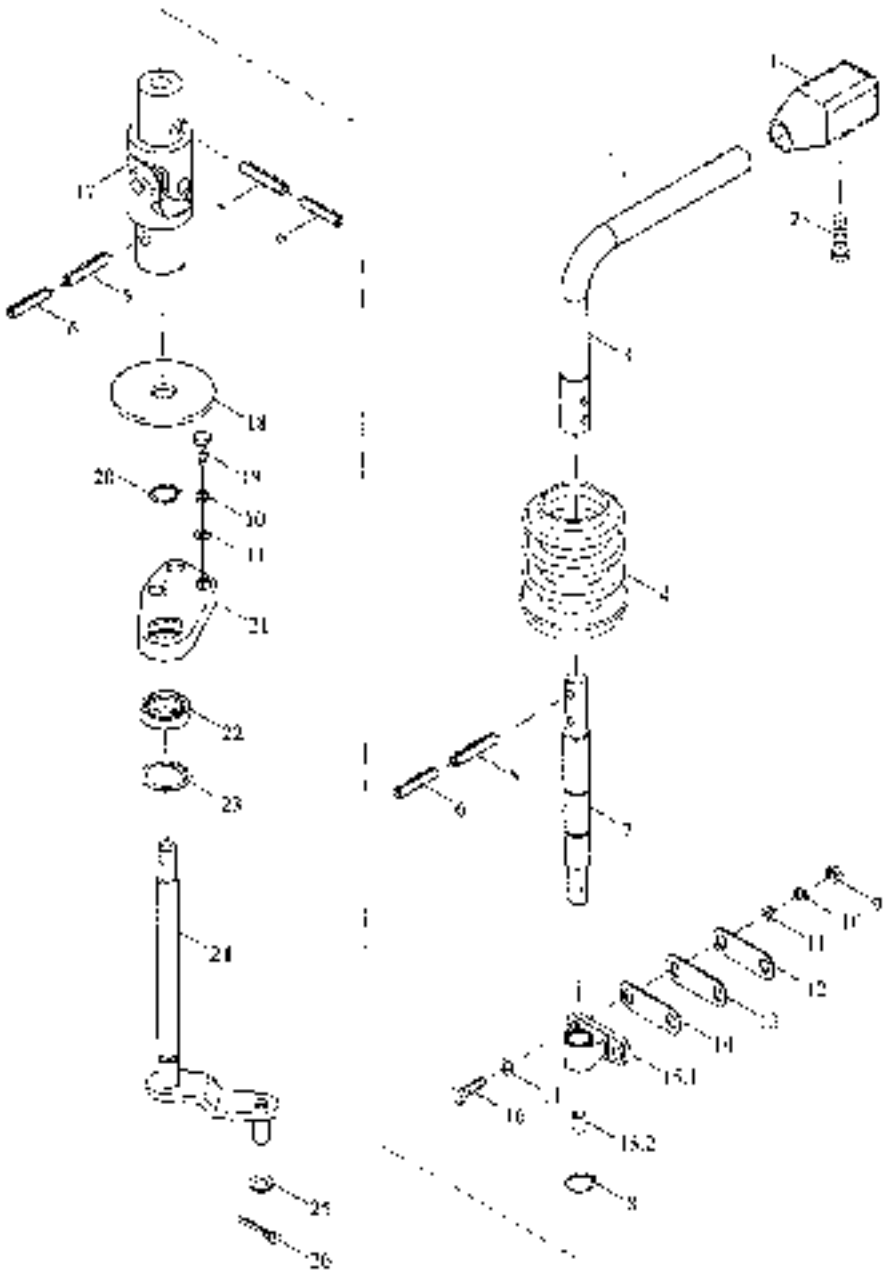

TE250.362M Shuttle shift control mechanism assembly

No.	Part code and specification	Part name	Quantity	Remark
	TE250.362M	Shuttle gear shift mechanism assembly	1	
1	TE250.362H-04	Plastic handle	1	
2	GB/T 818 M5×16-A2L	Cross recessed pan head screw	1	
3	TE250.362M.2	Shift lever welding	1	
4	TE250.362D-01	Dust ring	1	
5	GB/T 879.1 6×18	Elastic cylindrical pin	4	
6	GB/T 879.1 3.5×18	Elastic cylindrical pin	4	
7	TE250.362M-07b	Middle bar	1	
8	GB/T 894.1-16	Circlip for shaft	1	
9	GB/T 6170-M10-A3L	Type 1 hexagon nut	2	
10	GB/T 93 10 A0P	Normal type single coil spring lock washer	5	
11	GB/T 97.1 10 A0P	Plain washer	4	
12	TE250.362M-06	Adjusting washer	On demand	
13	TE250.362M-05	Adjusting washer	On demand	
14	TE250.362M-04	Adjusting washer	On demand	
15	TE250.362M.3	Guide sleeve assembly	1	
15.1	TE250.362M.3-01	Guide sleeve	1	
15.2	TE250.362M.3-02	Bushing	1	
16	GB/T 5783 M10×35-A3I	Hex bolt	2	
17	TE250.362D.2	Universal joint assembly	1	
18	TE250.362M-03	Seal block	1	
19	GB/T 5783-M10×25 A3L	Hex bolt	3	
20	GB/T 894.1-15	Circlip for shaft	1	
21	TE250.362M-01a	Guide sleeve	1	
22	GB/T 276-6002-2RS	Deep groove ball bearing	1	
23	GB/T 894.1-32	Circlip for shaft	1	
24	TE250.362M.1a	Joystick welding	1	
25	GB/T 848-12-A0P	Small washer	1	
26	GB/T 91 2.5×20-A0P	Cotter pin	1	

TE354.371T Transmission assembly-1 (007)

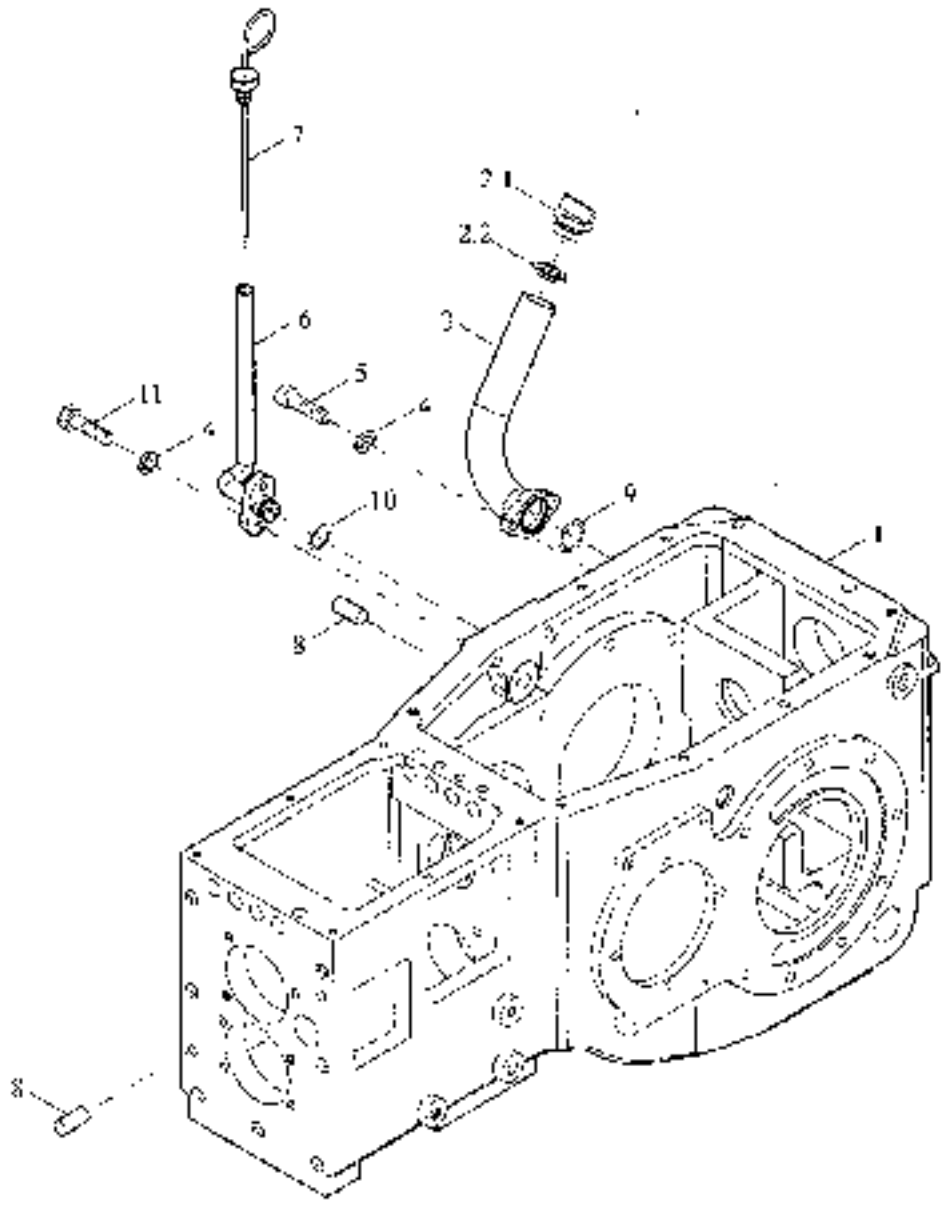

TE354.371T Transmission assembly-1 (007)

No.	Part code and specification	Part name	Quantity	Remark
	TE354.371T	Gearbox assembly	1	
	TE354.371.1a	Gearbox shell assembly	1	
1	TE354.371.1-01a	Gearbox housing	1	
2	TB604.384.3.2	Refueling plug assembly	1	
2.1	TB604.384.3.2-01	Refueling screw cap	1	
2.2	TB604.384.3.2-02	Pads	1	
3	TE250.371F.1.1	Welding pipe welding	1	
4	GB93-8-A0P	Normal type single coil spring lock washer	4	
5	GB/T5783-M8X25-8.8-A2L	Hex bolt	2	
6	TE250.371F.1.2	Oil pressure pipe welding	1	
7	TE250.371F.1.3	Dipstick assembly	1	
8	GB/T119.1-10m6X26-A0P	Round pin	4	
9	GB/T3452.1-32.5X1.80G	Pneumatic O - ring rubber seals	1	
10	GB/T3452.1-15.5X2.65G	Pneumatic O - ring rubber seals	1	
11	GB/T70.1-M8X25-10.9-A2L	Hexagon socket cup head screw	2	

TE354.371T Transmission assembly–2 (007)

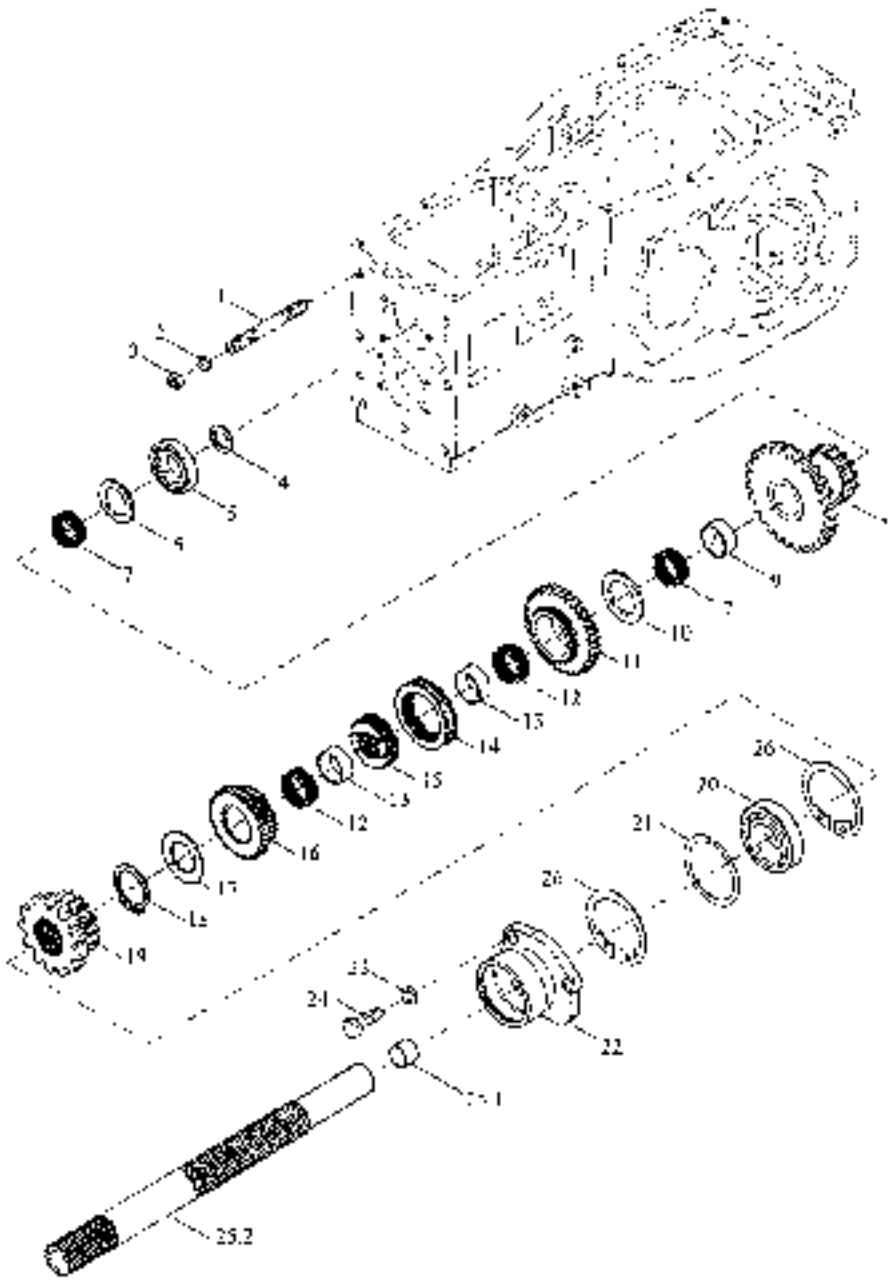

TE354.371T Transmission assembly-2 (007)

No.	Part code and specification	Part name	Quantity	Remark
	TE354.371T	Gearbox assembly	1	
1	GBT89-2014-8.4X15X40-83-A3L	Stud studs	7	
2	GBT93-14-A3L	Normal type single coil spring lock washer	7	
3	GBT6171-M14X1.5-8-A3L	Type I hexagon nut	7	
4	FT250.37A.277	Thrust ring	1	
5	GBT283-NJ206E	Cylindrical Roller Bearings	1	
6	FT250.37A.150	A shaft auxiliary variable speed spacer	1	
6	FT250.37A.151	A shaft auxiliary variable speed spacer	1	
6	FT250.37A.152	A shaft auxiliary variable speed spacer	1	
6	FT250.37A.153	A shaft auxiliary variable speed spacer	1	
6	FT250.37A.154	A shaft auxiliary variable speed spacer	1	
7	GBT20056-K30X35X27	Centering needle roller and cage assembly	2	
8	FT250.37.146	High and low gears	1	
9	FT250.37.139	Short spacer	1	
10	FT250.37.138	IV gear drive gear ring	1	
11	TE300.371-08	IV gears	1	
12	QLWZB120-K42X48X22	Needle roller bearings	2	
13	FT250.37.134	Gear slip sleeve	2	
14	TE300.371-09	Engagement sets	1	
15	FT250.37.135	Engaging the socket	1	
16	TE300.371-07	III gear driven gear	1	
17	FT250.37.133	Third gear drive gear ring	1	
18	GBT894.1-34	Circlip for shaft	1	
19	TE300.371-05	I-II gear sliding gear	1	
20	GBT276-6207N	Deep groove ball bearing	1	
21	GBT305-72-78.6	Stop ring	1	
22	FT250.37.128	A shaft front bearing cover	1	
23	GBT93-10-A3L	Normal type single coil spring lock washer	3	
24	GBT5783-M10X25-8.8-A3L	Hex bolt	3	
25	TE354.371T-1	A shaft assembly	1	
25.1	FT250.37A.137	Bushings	1	
25.2	TE354.371T-1-01	A shaft	1	
26	GBT894.1-35	Circlip for shaft	2	

TE354.371T Transmission assembly-3 (007)

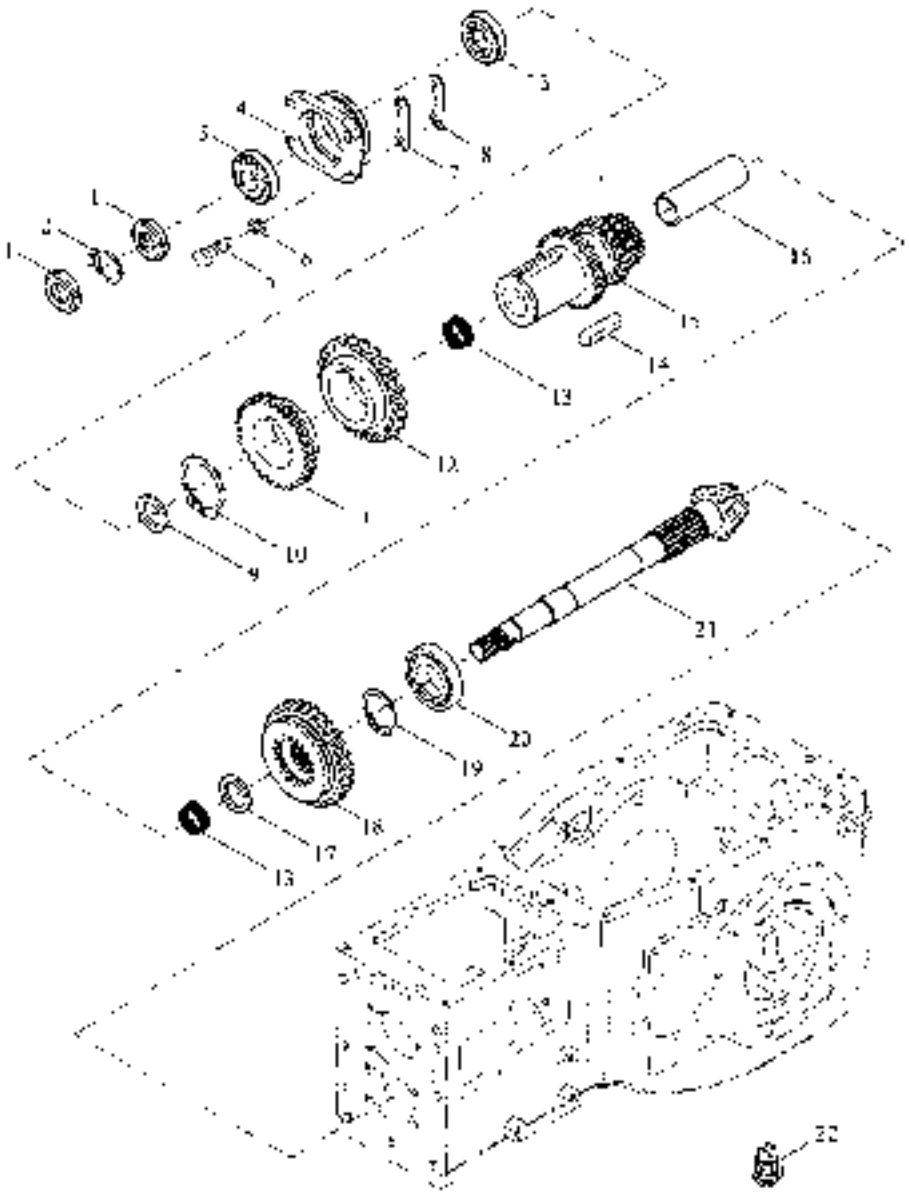

TE354.371T Transmission assembly-3 (007)

No.	Part code and specification	Part name	Quantity	Remark
	TE354.371T	Gearbox assembly	1	
1	GBT812-M27X1.5	Round nut	2	
2	GBT858-27	Circular washers for nuts	1	
3	GBT297-30206	Tapered roller bearing	2	
4	FT250.37.121	Two axle front bearing	1	
5	GBT5783-M10X25-8.8-A3L	Hex bolt	4	
6	GBT93-10-A3L	Normal type single coil spring lock washer	4	
7	FT250.37.122	Two-axis adjustment gasket	1	
8	FT250.37.123	Two-axis adjustment gasket	1	
9	FT250.37.110a	Two-axis front thrust ring	1	
10	GBT894.1-55	Circlip for shaft	1	
11	TE300.371-03	A second gear driven gear	1	
12	TE300.371-04	Ⅰ gear driven gear	1	
13	GBT20056-K52X37X27	Centering needle roller and cage assembly	2	
14	GBT1096-14X9X56	Flat key	1	
15	TE300.371-06a	Ⅱ – Ⅳ gear driven gear	1	
16	FT250.37.105a	Long spacer	1	
17	FT250.37.104a	Two-axis thrust ring	1	
18	FT250.37.103a	High and low sliding gears	1	
19	GBT894.1-38	Circlip for shaft	1	
20	TE250.371C-02	Cylindrical roller bearings NUP38X75X23	1	
21	TE300.371-01a	Second axis	1	
22	FT65.38.026	Oil ring assembly	1	

TE354.372A Transmission case rear central assembly-1 (010)

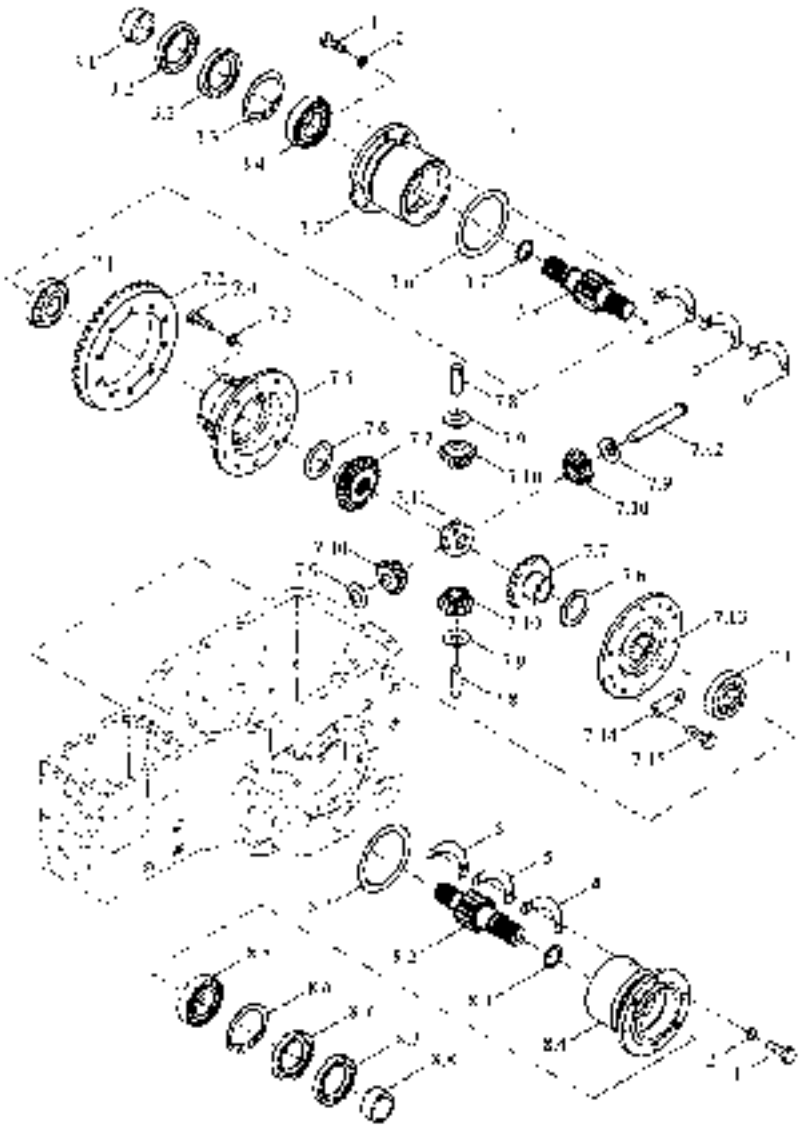

TE354.372A Transmission case rear central assembly-1 (010)

No.	Part code and specification	Part name	Quantity	Remark
	TE354.372A	Gearbox after the central assembly	1	
1	GB/T5783 M10X30-8.8-A3L	Hex bolt	8	
2	GB/T93-10-A3L	Normal type single coil spring lock washer	8	
3	TE354.372A.2	Right short axle assembly	1	
3.1	PT250.37.208	Oil ring	1	
3.2	GB/T9877.1-SD52X80X10	Lip shape seal ring	2	
3.3	GB/T893.1-80	Circlip for hole	1	
3.4	GB/T283-NUP1072E	Cylindrical Roller Bearings	1	
3.5	TE354.372A.2-01	Right bearing seat	1	
3.6	GB/T3452.1-103X3.55G	Pneumatic O - ring rubber seals	1	
3.7	GB/T3452.1 28.0X3.55G	Pneumatic O - ring rubber seals	1	
3.8	TE300.372A.1-02	The final drive of the driven gear	1	
4	PT250.37.204	Adjusting washer	1	
5	PT250.37.205	Adjusting washer	1	
6	PT250.37.206	Adjusting washer	1	
7	TE300.372.2	Differential assembly	1	
7.1	GB/T297-32011	Tapered Roller Bearings	2	
7.2	TE300.372.2-07	Driven spiral bevel gear	1	
7.3	GB/T93-8-A3L	Normal type single coil spring lock washer	8	
7.4	PT250.37.201	Fixing screws	8	
7.5	TE300.372.2-05	Differential case	1	
7.6	PT250.37.203	Shaft gears	1	
7.6	PT250.37.332	Shaft gears	1	
7.6	PT250.37.333	Shaft gears	1	
7.6	PT250.37.334	Shaft gears	1	
7.6	PT250.37.335	Shaft gears	1	
7.6	PT250.37.336	Shaft gears	1	
7.7	PT250.37.202	Side gears	2	
7.8	TE300.372.2-09	Short planetary gear shaft	2	
7.9	PT250.37.199	Planetary gears	4	
7.10	PT250.37.200	Planetary gear	4	
7.11	TE300.372.2-08	Center ring	1	
7.12	PT250.37.198	Planetary gear shaft	1	
7.13	TE300.372.2-06	Differential stand	1	
7.14	TE300.372.2-03	Locking plate	5	
7.15	GB/T5786-M10X1.25X35-8.8-A2F	Hex bolt	10	
8	TE354.372A.1	Left short axle assembly	1	
8.1	GB/T3452.1-103X3.55G	Pneumatic O - ring rubber seals	1	
8.2	TE300.372A.1-02	The final drive of the driven gear	1	
8.3	GB/T3452.1-28.0X3.55G	Pneumatic O - ring rubber seals	1	

TE354.372A Transmission case rear central assembly-1 (010) Continu

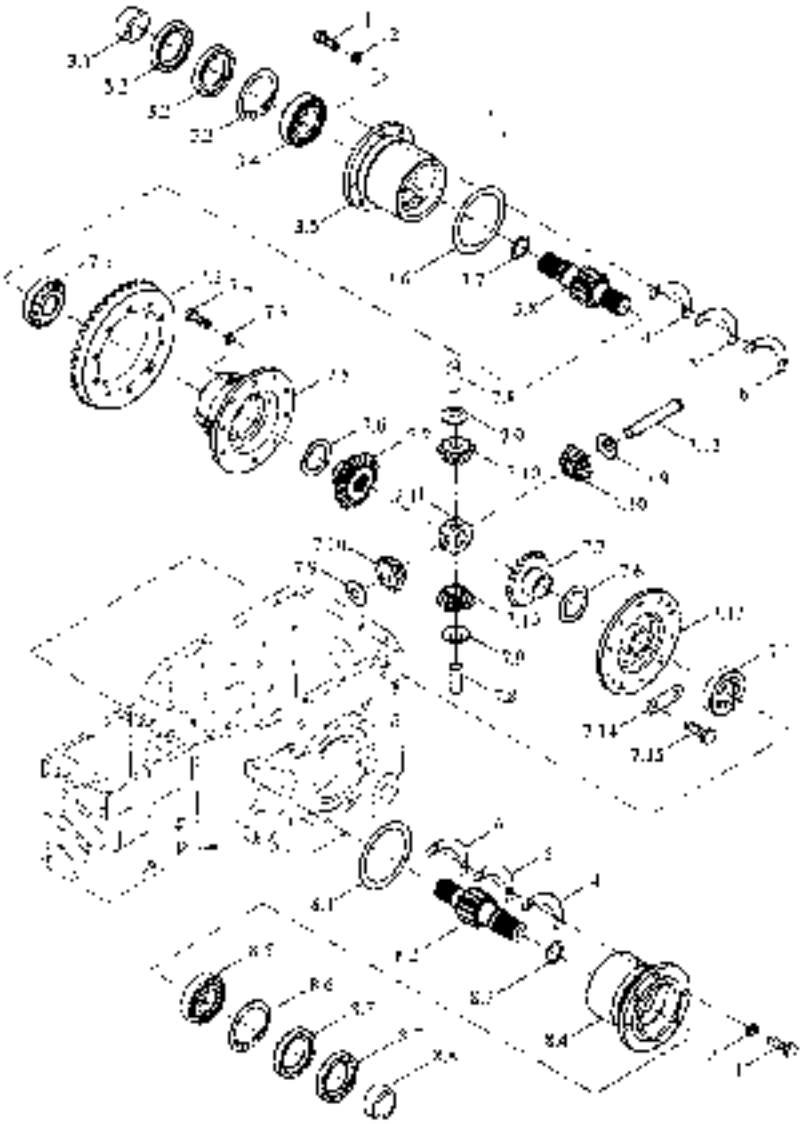

TE354.372A Transmission case rear central assembly-1 (010) Continued

No	Part code and specification	Part name	Quantity	Remark
8.4	TE354.372A.1-01	Left bearing seat	1	
8.5	GB1293 NUP405E	Cylindrical Roller Bearings	1	
8.6	GB894.1-80	Circlip for hole	1	
8.7	GB9877.1-FB52X80X8D	Lip-shape seal ring	2	
8.8	FT250.37.708	Oil ring	1	

TE354.372A Transmission case rear central assembly-2 (010)

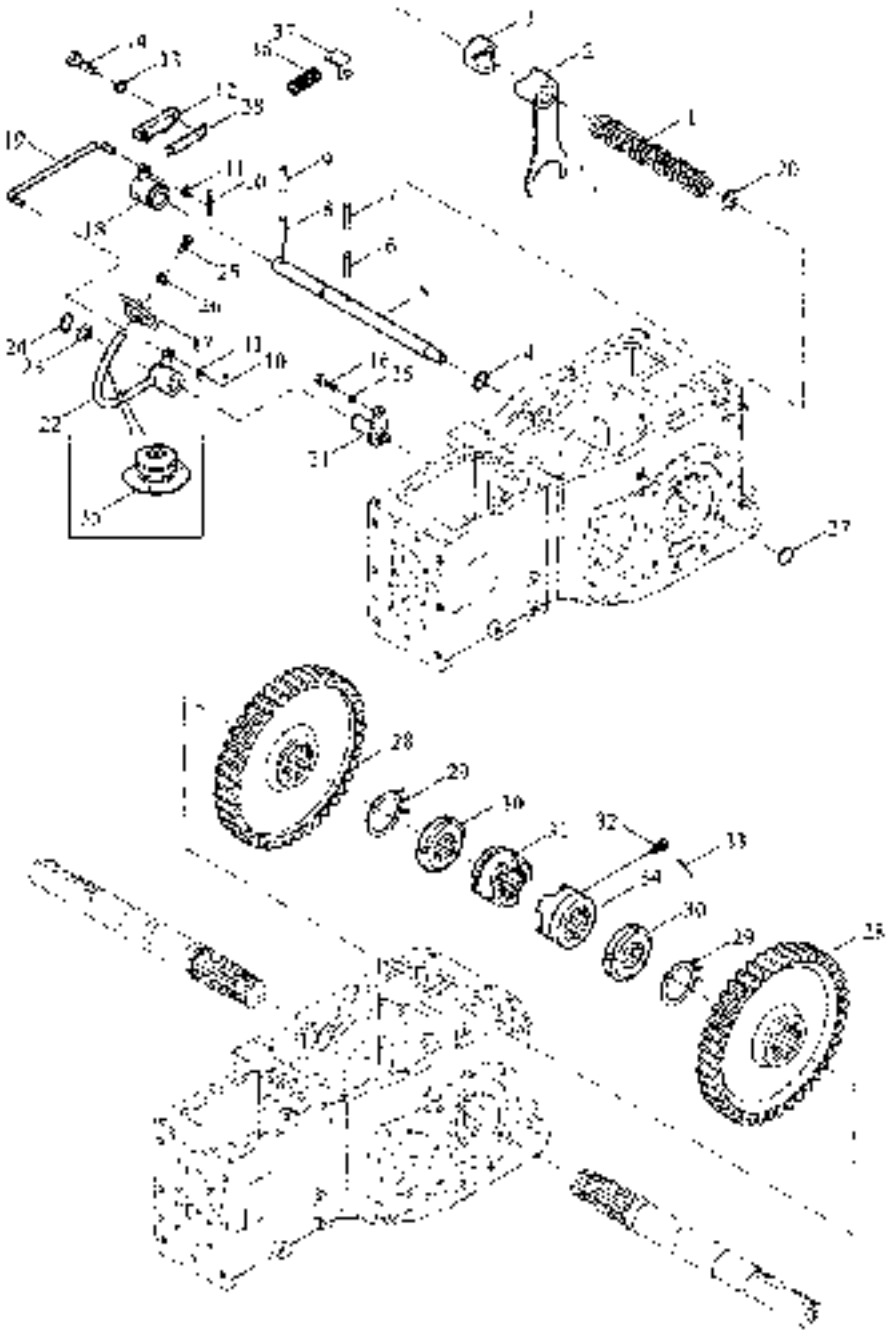

TE354.372A Transmission case rear central assembly-2 (010)

No	Part code and specification	Part name	Quantity	Remark
	TE354.372A	Gearbox after the central assembly	1	
1	FT250.37.263	Differential lock spring	1	
2	TE354.372-02	Differential lock fork	1	
3	TE250.372F-05	Differential lock block	1	
4	GB/T3452.1-15.0X2.65G	Pneumatic O-ring rubber seals	1	
5	TE354.372-03	Differential lock fork shaft	1	
6	GB/T879.1-8X40	Elastic cylindrical pin	1	
7	GB/T879.1-5X40	Elastic cylindrical pin	1	
8	GB/T879.1-8X35	Elastic cylindrical pin	1	
9	GB/T879.1-5X35	Elastic cylindrical pin	1	
10	GB/T91-3.2X16-A3L	Cotter pin	2	
11	GB/T95-8-A3L	Plain washer	2	
12	TE250.372F-02	Baffle	1	
13	GB/T93-10-A3L	Normal type single coil spring lock washer	2	
14	GB/T5783-M10X30-8.8-A3L	Hex bolt	2	
15	GB/T93-8-A3L	Normal type single coil spring lock washer	1	
16	GB/T5783-M8X20-8.8-A2L	Hex bolt	1	
17	TE250.372F-07	Differential lock pedal	1	
18	TE250.372F.3	Differential lock fork shaft-shaft hub welding	1	
19	TE354.372-01	Differential lock lever	1	
20	GB/T97.1-16-A3L	Plain washer	1	
21	TE250.372F.2	Differential lock hub support shaft welding	1	
22	TE354.372.1	Differential lock rocker welding	1	
23	GB/T97.1-20-A3L	Plain washer	1	
24	GB/T894.1-20	Circlip for shaft	1	
25	GB/T67-M6X16-4.8-A2L	Round-slotted plug	1	
26	GB/T93-6-A3L	Normal type single coil spring lock washer	1	
27	1172220	Round slotted plug	1	
28	TE300.372-01	Final drive driven gear	2	
29	GB/T858-52	Circular washers for nuts	2	
30	GB/T812-M52X1.5	Round nut	2	
31	TE300.372-05	Right teeth	1	
32	FT250.37.264	Locking screw	1	
33	TE250.212-05	Low carbon steel wire SZ-1.2	1	
34	TE300.372-04	Left teeth	1	
35	TE250.372F-06	Dust cover	1	
36	TE250.372B-05	Return spring	1	
37	TE250.372B-04	Spring bracket	1	
38	TE250.372F-18	Adjusting washer	1	

TE354.373 Transmission control assembly-1

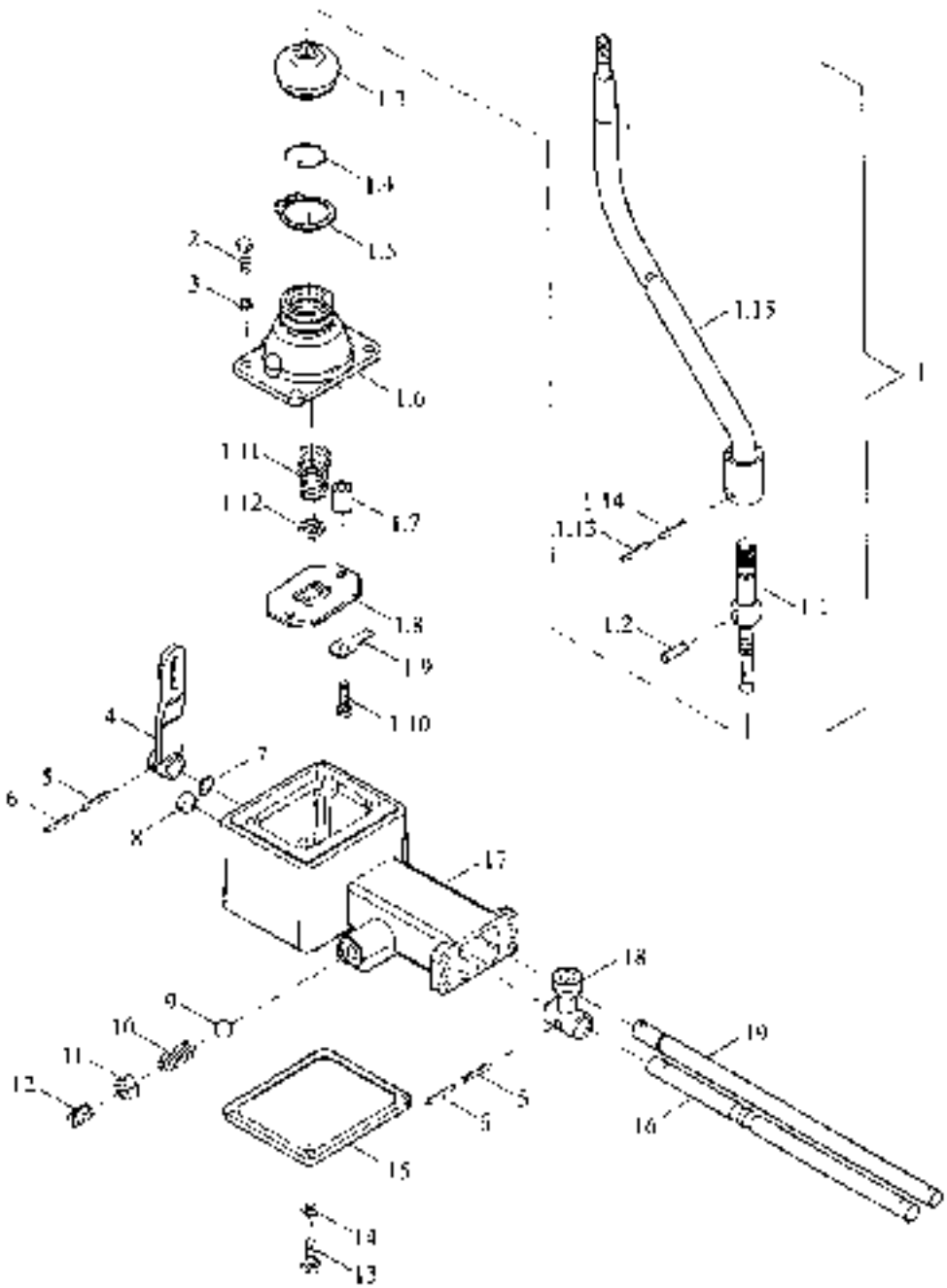

TE354.373 Transmission control assembly-1

No.	Part code and specification	Part name	Quantity	Remark
	TE354.373	Transmission box control mechanism assembly	1	
	TE354.373.1	Side control mechanism assembly	1	
1	TE250.373F.1.1	Main speed control cover assembly	1	
1.1	TE250.373F.1.1-01b	Main shift keystick	1	
1.2	GBT119.1-6h5X40-A0P	Round pin	1	
1.3	FT800.37.138	Shift lever dust cover	1	
1.4	FT250.37.248	Wire ring	1	
1.5	GBT894.1-45	Circlip for shaft	1	
1.6	FT250.37.211	Main shift lever seat	1	
1.7	TE250.373F.1.1-03	Pad	2	
1.8	TE250.373F.1.1-02	Shift lever limit plate	1	
1.9	GBT854-8	Single ear stop washers	2	
1.1	GBT5782-M8X40-8.8-A2L	Hex bolt	2	
1.11	FT250.37.183	Shift lever spring	1	
1.12	FT300.37.164	Shift lever spring ring	1	
1.13	GBT879.1-5X35	Elastic cylindrical pin	1	
1.14	GBT879.1-8X35	Elastic cylindrical pin	1	
1.15	TE250.373F.1.1.1a	Main shift lever welding	1	
2	GBT5783-M8X25-8.8-A2L	Hex bolt	4	
3	GBT93-8-A0P	Normal type single coil spring lock washer	4	
4	TE250.373F.1.2	Welding the actuating rocker substransmission	1	
5	GBT879.1-6X24	Elastic cylindrical pin	2	
6	GBT879.2-3.5X24	Elastic cylindrical pin	2	
7	GBT3452.1-12.5X1.80C	Pneumatic O-ring rubber seals	1	
8	GBT308-9.5-C200-b	Steel ball	1	
9	GBT6172.1-M12-04-A3L	Hexagonal nuts	1	
10	GBT73-M12X25-14H-A3L	Slotted flat end screw	1	
11	GBT5783-M6X20-8.8-A2L	Hex bolt	4	
12	GBT93-6-A0P	Normal type single coil spring lock washer	4	
13	TE250.373F.1-03	Side control under the cover	1	
14	TE250.373F.1-05	Main transmission control lever	1	
15	TE354.373.1-01	Side cover	1	
16	TE250.373F.1-02	The sensor [illegible]	1	
17	TE250.373F.1-04	Auxiliary shift lever	1	
18	Q72218	Bowl-shaped plug	1	
19	FT704.42B.163	The fork shaft locates the spring	1	

TE354.373 Transmission control assembly-2

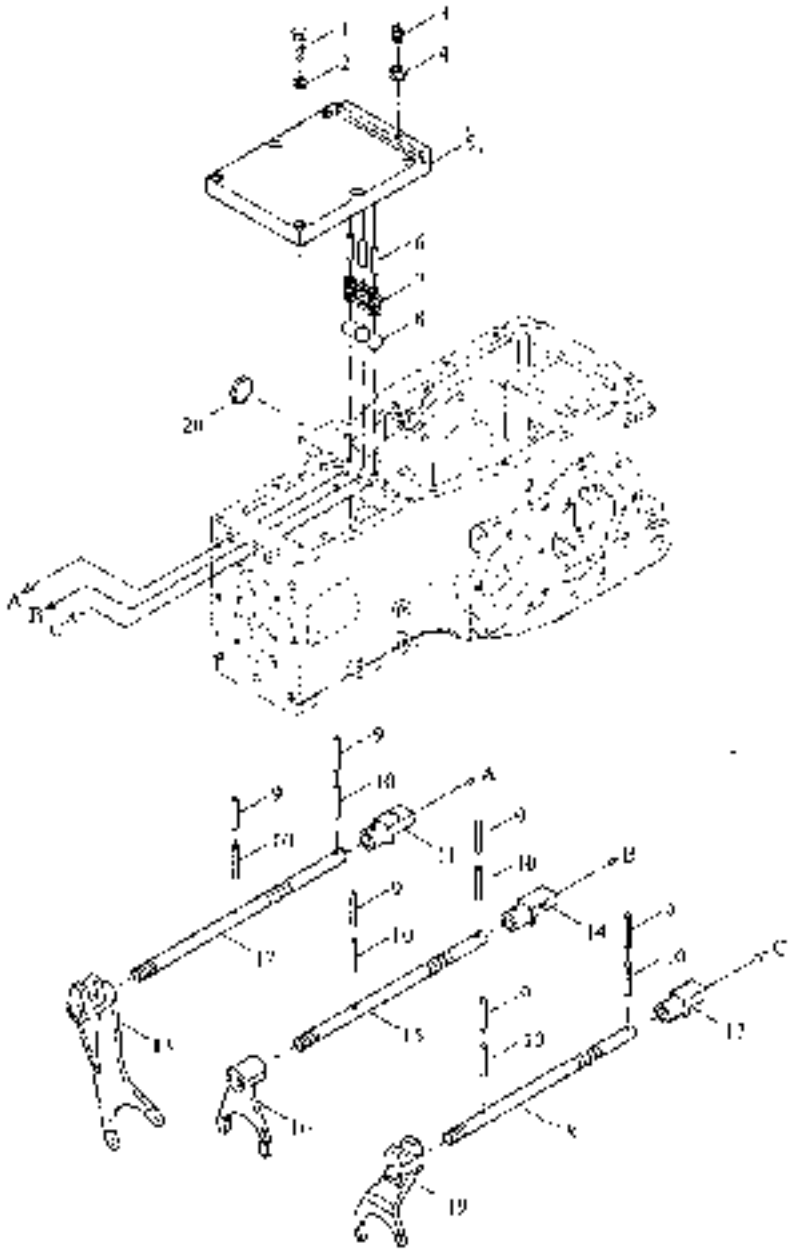

TE354.373 Transmission control assembly-2

No.	Part code and specification	Part name	Quantity	Remark
	TE354.373	Transmission key control mechanism assembly	1	
1	GBT5783-M8X40-8.8-A2L	Hex bolt	6	
2	GBT93-8-A0P	Normal type single coil spring lock washer	6	
3	FT250.37.249	Fixing screws	1	
4	GBT6173-M8X1-05-A2L	Hexagonal nuts	1	
5	TE250.373F-01	Gearbox chain cover	1	
6	FT250.37.250	Fixed pin	3	
7	TE354.373A-01	Fork shaft self-locking spring	3	
8	GBT308-8.731-G200-b	Steel ball	3	
9	GBT879.1-3X24	Elastic cylindrical pin	6	
10	GBT879.1-5X24	Elastic cylindrical pin	6	
11	TE250.373F-11	High and low tipped	1	
12	TE354.373-03	High and low gear fork shaft	1	
13	FT250.37.145	High and low fork	1	
14	TE250.373F-10	Ⅲ-Ⅳ block block	1	
15	TE354.373-02	Ⅲ-Ⅳ gear fork shaft	1	
16	FT250.37.143	Ⅲ-Ⅳ fork	1	
17	TE250.373F-09	Ⅲ-Ⅳ file pull the head	1	
18	TE354.373-01	I-II gear fork shaft	1	
19	TE300.373-01	I-II stall	1	
20	Q72114	Plugs	1	

TE354.373 Transmission control assembly-3

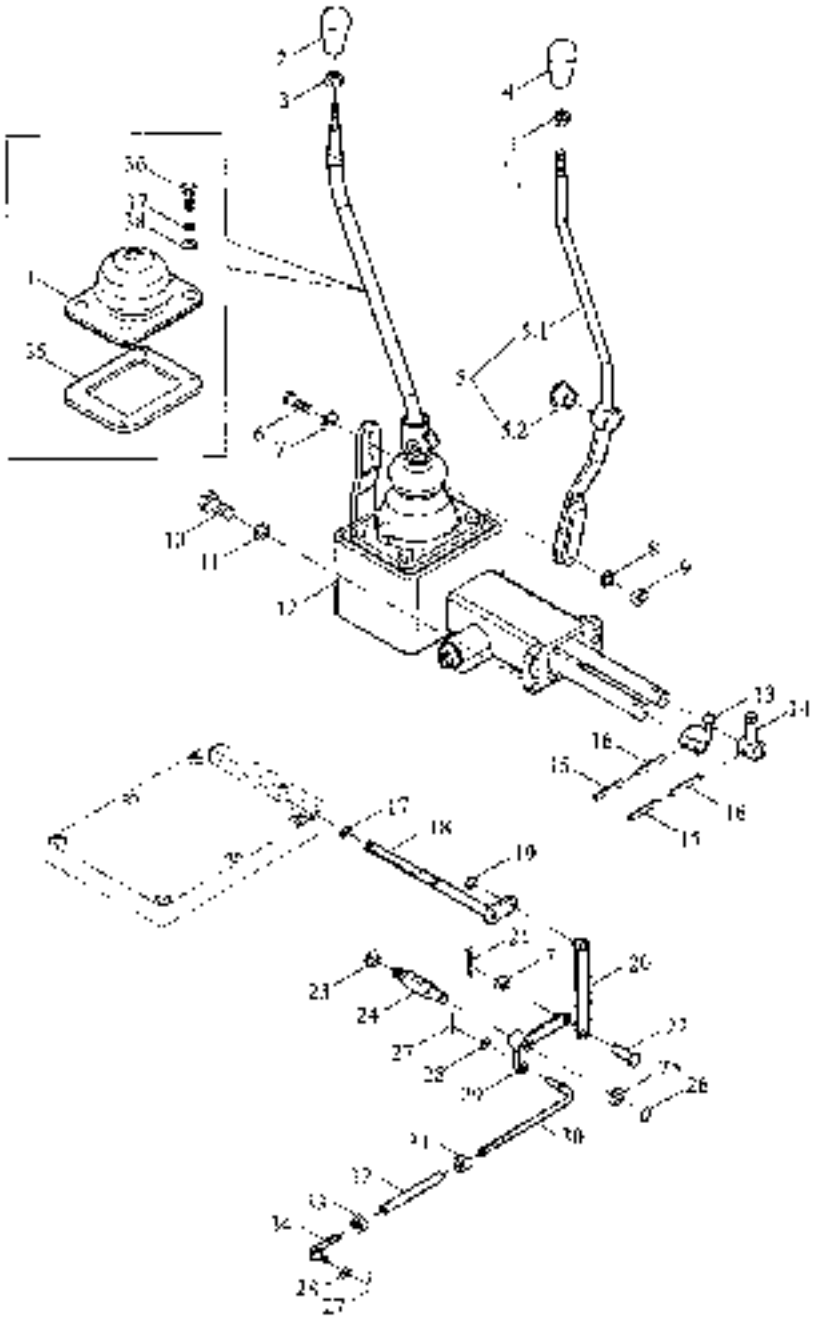

TE354.373 Transmission control assembly-3

No.	Part code and specification	Part name	Quantity	Remark
	TE354.373	Transmission hydraulic control mechanism assembly	1	
1	TE250.373F-15	protecting mask	1	
2	TE250.371C.2.2	Main speed control joystick assembly	1	
3	GBT6170-M10-8-A2L	Type I hexagon nut	1	
4	TE250.373G	Vice shift joystick	1	
5	TE354.373.2	Three joystick is pressed to the auxiliary speed	1	
5.1	TE354.373.2.1	Vice speed joystick welding	1	
5.2	TE254.582H.11-01	Vice-speed joystick welding	1	
6	TE250.373F-13	Stop bolts	1	
7	GBT95-8-A0P	Plain washer	1	
8	GBT93-6-A0P	Normal type single coil spring lock washer	1	
9	GBT6170-M6-8-A2L	Type I hexagon nut	1	
10	GBT70.1-M8X25-12.9	Hexagon socket cap head screw	4	
11	GB93-8-A0P	Normal type single coil spring lock washer	4	
12	TE354.374	Side control mechanism assembly	1	
13	TE250.373G-02	Main speed control	1	
14	TE250.373F-03	Vice variable speed operation inside arc head	1	
15	GBT879.2-3.5X24	Elastic cylindrical pin	2	
16	GBT879.1-6X24	Elastic cylindrical pin	2	
17	GBT3452.1-8.75X1.80G	Pneumatic O-ring rubber seals	1	
18	TE250.373F.2	Interlocking shaft welding	1	
19	GBT896-6	Open ring	1	
20	TE250.373F.7	Pull plate welding	1	
21	GBT91-3.2X20-A0P	Cotter pin	1	
22	GBT882-98X16-A0P	Pin	1	
23	GBT93-12-A0P	Normal type single coil spring lock washer	1	
24	TE250.373F-14	Studs	1	
25	GBT848-12-A0P	Small washers	1	
26	GBT894.1-12	Circlip for shaft	1	
27	GBT91-3.2X25-A0P	Cotter pin	2	
28	GB95-10-A0P	Plain washer	2	
29	TE250.373F.4	Chain rear wheel cap	1	
30	TE250.373F.5	Rod welding	1	
31	GBT6171-M10X1-8-A2L	Type I hexagon nut	1	
32	TE250.433C-09	Connecting rod	1	
33	GBT6171-M10X1-LH-8-A2L	Type I hexagon nut	1	
34	TE250.433C.14	Brake short rod welding (II)	1	
35	TE250.373F-12	Pressure plate	1	
36	GBT5783-6IX20-8.8-A2L	Hex bolt	4	
37	GBT93-5-A0P	Normal type single coil spring lock washer	4	
38	GBT95-5-A0P	Plain washer	4	

TE300.391 Left axle assembly

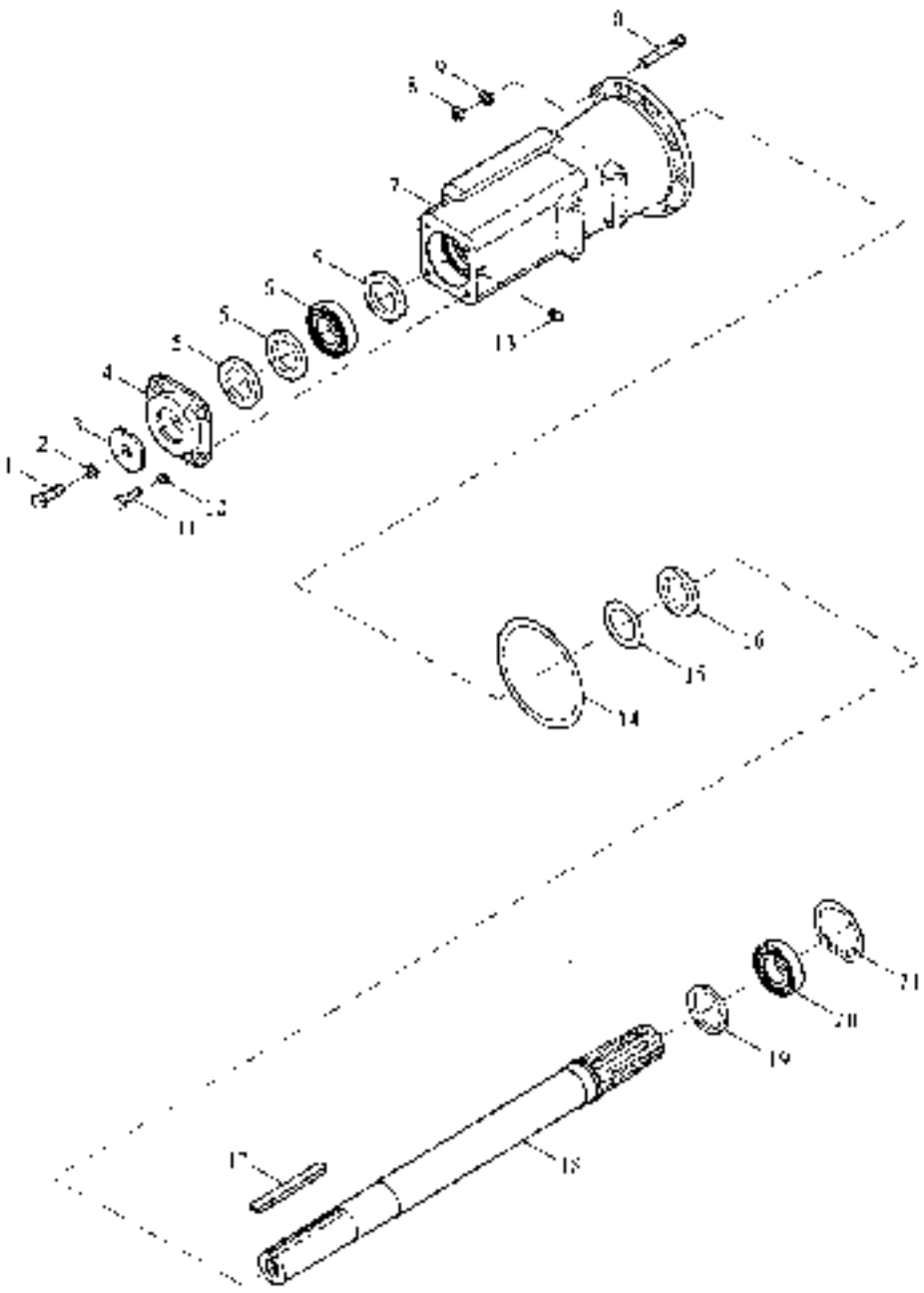

TE300.391 Left axle assembly

No	Part code and specification	Part name	Quantity	Remark
	TE300.391	Left shaft assembly	1	
1	GBT5783-M16X35-8.8-A3L	Hex bolt	1	
2	GBT93-16-A0P	Normal type single coil spring lock washer	1	
3	FT250.37.216	Circlip	1	
4	FT250.37.214	Drive shaft bearing cover	1	
5	GBT9877.1-FB50X72X8D	Inner Frame Shaft Rotary Shaft Lip Seal	3	
6	GBT276-6210	Deep groove ball bearings	1	
7	TE300.391-02	Left drive shaft sleeve	1	
8	GBT6171-M12X1.25-10-A2L	Type 1 hexagon nut	8	
9	GBT93-12-A0P	Normal type single coil spring lock washer	8	
10	GBT899-AN10-M12X1.25X35-10.9-A3L	Stud studs	8	
11	GBT5783-M10X25-8.8-A3L	Hex bolt	4	
12	GBT93-10-A0P	Normal type single coil spring lock washer	4	
13	JBT7940.1-M10X1	Straight hydraulic grease nipple	1	
14	GBT3452.1-112X3.55G	Pneumatic O - ring rubber seals	1	
15	FT250.37.212	Oil seal circle	1	
16	GBT9877.1-FB55X75X8D	Inner Frame Shaft Rotary Shaft Lip Seal	1	
17	FT250.37.215	Flat key	1	
18	TE300.391-01	Drive shaft	1	
19	FT250.37.218	Bearing ring	1	
20	GBT276-6211	Deep groove ball bearings	1	
21	GBT893.1-100	Circlip for hole	1	

TE300.392 Right axle assembly

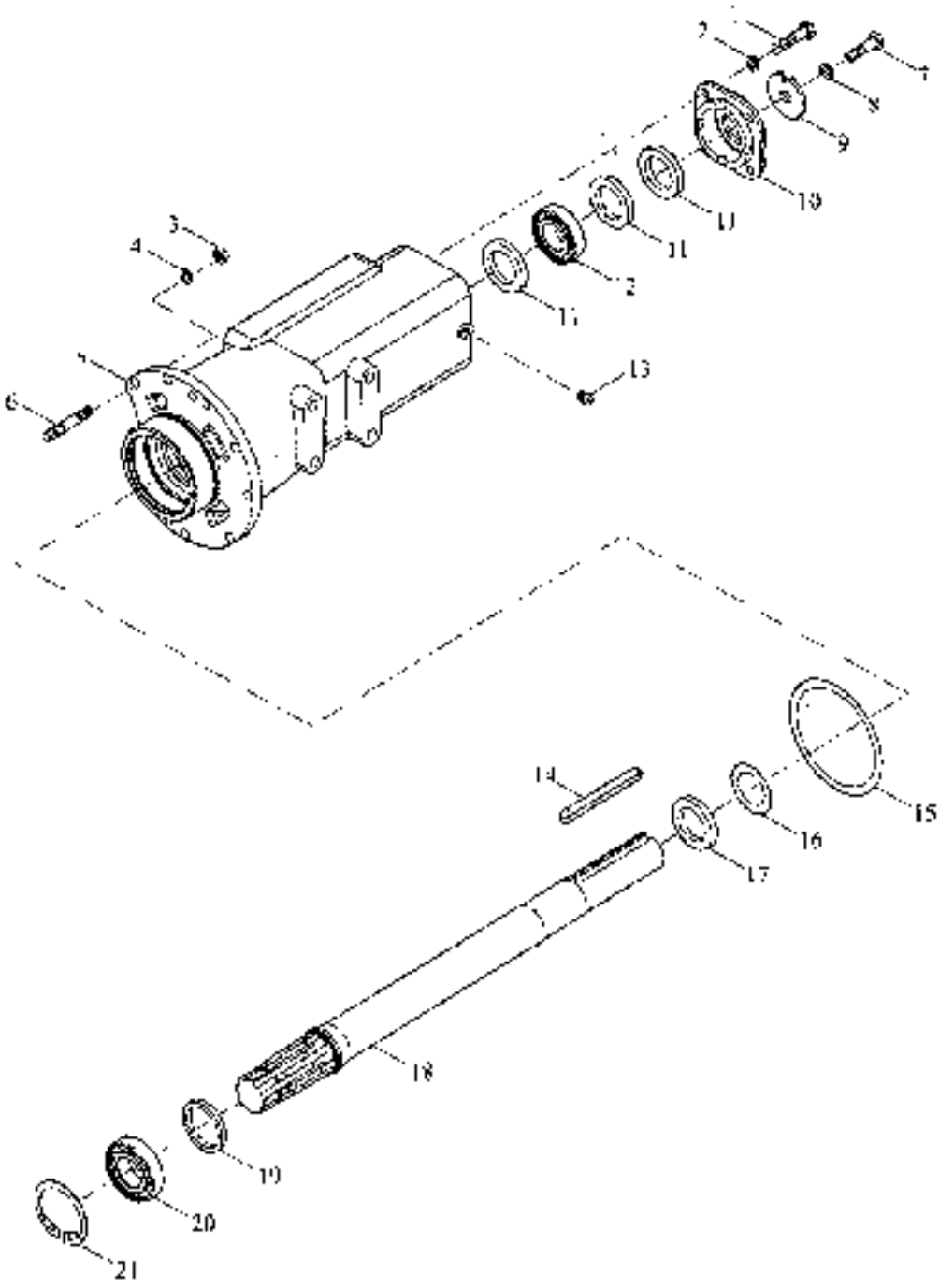

TE300.392 Right axle assembly

No.	Part code and specification	Part name	Quantity	Remark
	TE300.392	Right axle assembly	1	
1	GB/T5783-M10X25-8.8-A3I.	Hex bolt	4	
2	GB/T93-10-A0P	Normal type single coil spring lock washer	4	
3	GB/T6171-M12X1.25-10-A2I.	Type 1 hexagon nut	8	
4	GB/T93-12-A0P	Normal type single coil spring lock washer	8	
5	TE300.392-01	Right drive shaft sleeve	1	
6	GB/T39-M12X1.25X35-10.9-A3I.	Stud studs	8	
7	GB/T5783-M16X35-8.8-A3I.	Hex bolt	1	
8	GB/T93-16-A0P	Normal type single coil spring lock washer	1	
9	FT250.37.216	Circlip	1	
10	FT250.37.214	Drive shaft bearing cover	1	
11	GB/T9877.1-FB50X72X8D	Lip-shape sealing	3	
12	GB/T276-6210	Deep groove ball bearings	1	
13	JB/T7940.1-M10X1	Straight hydraulic grease nipple	1	
14	FT250.37.215	Flat key	1	
15	GB/T3452.1-112X3.55G	Pneumatic O-ring rubber seals	1	
16	FT250.37.242	Oil seal circle	1	
17	GB/T9877.1-FB55X75X8D	Lip-shape sealing	1	
18	TE300.391-01	Drive shaft	1	
19	FT250.37.218	Bearing ring	1	
20	GB/T276-6211	Deep groove ball bearing	1	
21	GB/T893.1-100	Circlip for hole	1	

TE250.401A Steering wheel assembly

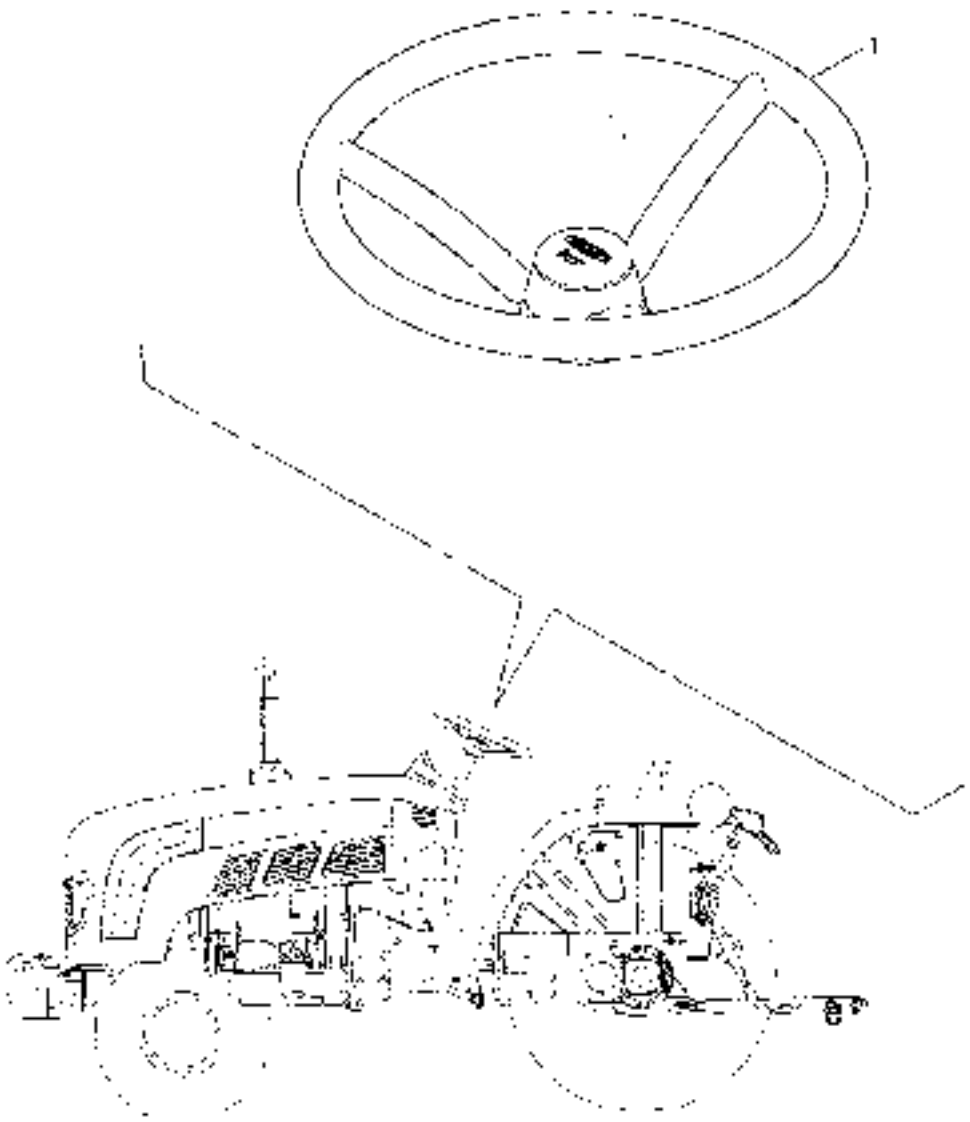

TE250.401A Steering wheel assembly

No.	Part code and specification	Part name	Quantity	Remark
	TE250.401A	Steering wheel assembly	1	
1	TE250.401A-1	Steering cap assembly	1	

TE354.402 Steering pipe assembly-1 (012)

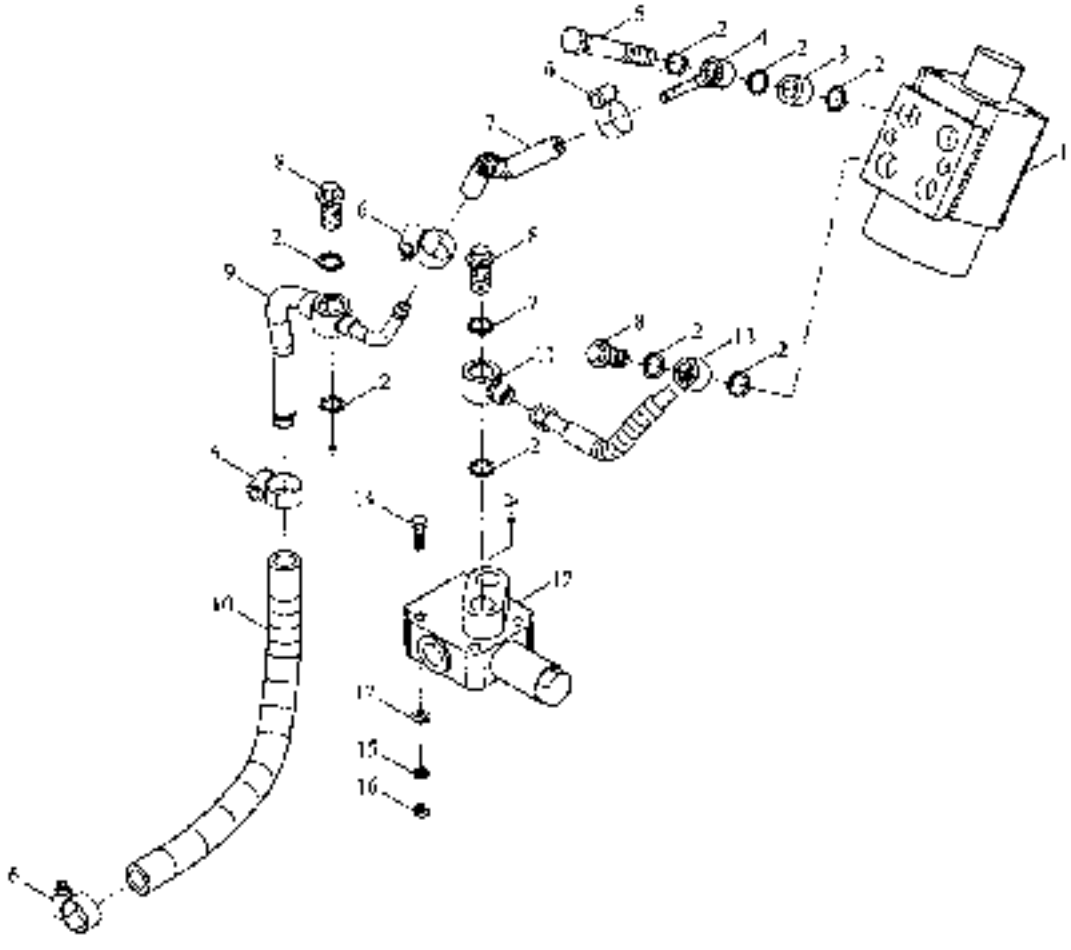

TE354.402 Steering pipe assembly-1 (012)

No.	Part code and specification	Part name	Quantity	Remark
	TE354.402	Steering pipe assembly	1	
1	FT254.40.028	Hydraulic steering gear assembly	1	
2	JB/T982-20	Combined sealing washer	14	
3	TE354.402.03	Sleeves	2	
4	TE354.402.1	Steer return pipe welding	1	
5	TE354.402.02	Hollow Bolt M20X1.5	2	
6	Q67627	Type B worm drive hose hoop	4	
7	TE254.402C-01	Oil return hose	1	
8	FT254.40.102	Hollow bolts	4	
9	TE354.402.2a	Single valve return pipe welding	1	
10	TE354.402.01a	Single valve return hose	1	
11	TE254.402E-08	Connector	1	
12	FT254.40.040	Single-channel stabilized shunt valve	1	
13	TE254.402E.1a	Steer inlet tube	1	
14	GB/T5782 M8X55-8.8-A2J.	Hex bolt	3	
15	GB/T93-8 -A3J.	Normal type single coil spring lock washer	4	
16	GB/T6170 M8-8-A2J.	Type 1 hexagon nut	4	
17	GB/T96.1-8-A3J.	Large washers	3	

TE354.402 Steering pipe assembly-2 (012)

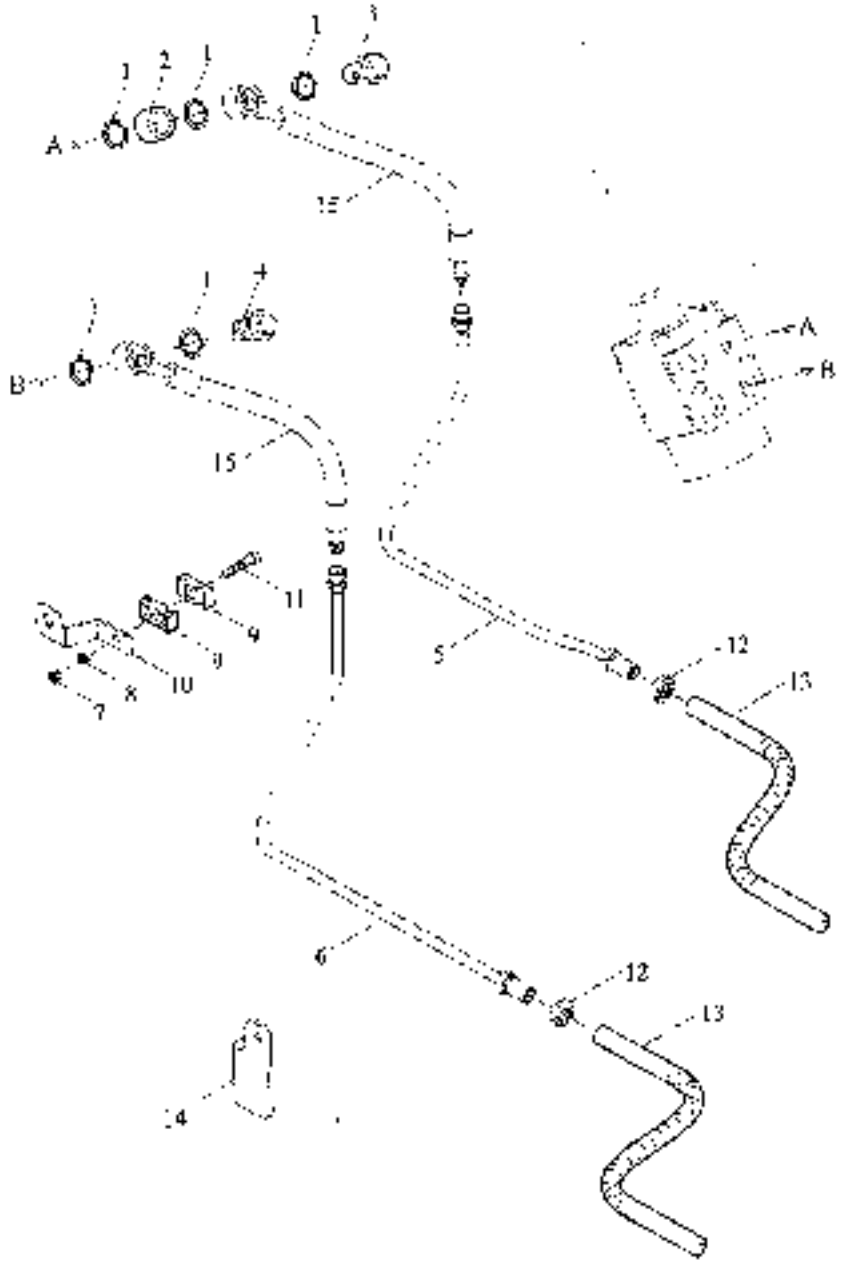

TE354.402 Steering pipe assembly-2 (012)

No.	Part code and specification	Part name	Quantity	Remark
	TE354.402	Steering pipe assembly	1	
1	JBT982-20	Combined sealing washer	14	
2	TH354.402-03	Sleeves	7	
3	TH354.402-02	Hollow Bolt M20X1.5	2	
4	FT254.40.102	Hollow bolts	4	
5	TE254.402F-11	Steering left pipe for welding	1	
6	TE254.402F-12	Steering of the right turn tubing	1	
7	GB/T6170 M8-8-A2T	Type 1 hexagon nut	4	
8	GB/T93-8-A3L	Normal type single rod spring lock washer	4	
9	TT554.400-121	Double pipe clamp	3	
10	TE254.402F-05	Tubing bracket 2	1	
11	GB/T5782-M8X40-8.8-A2L	Hex bolt	1	
12	GB/T6175-M16X1.5-05-A3L	Hexagonal nuts	7	
13	TE354.402-4u	Steering tubing assembly two	2	
14	TE254.402F-01	Tubing bracket	1	
15	TE254.402F-10	Steering base assembly	2	

TL01403040000K Steering column assembly (002)

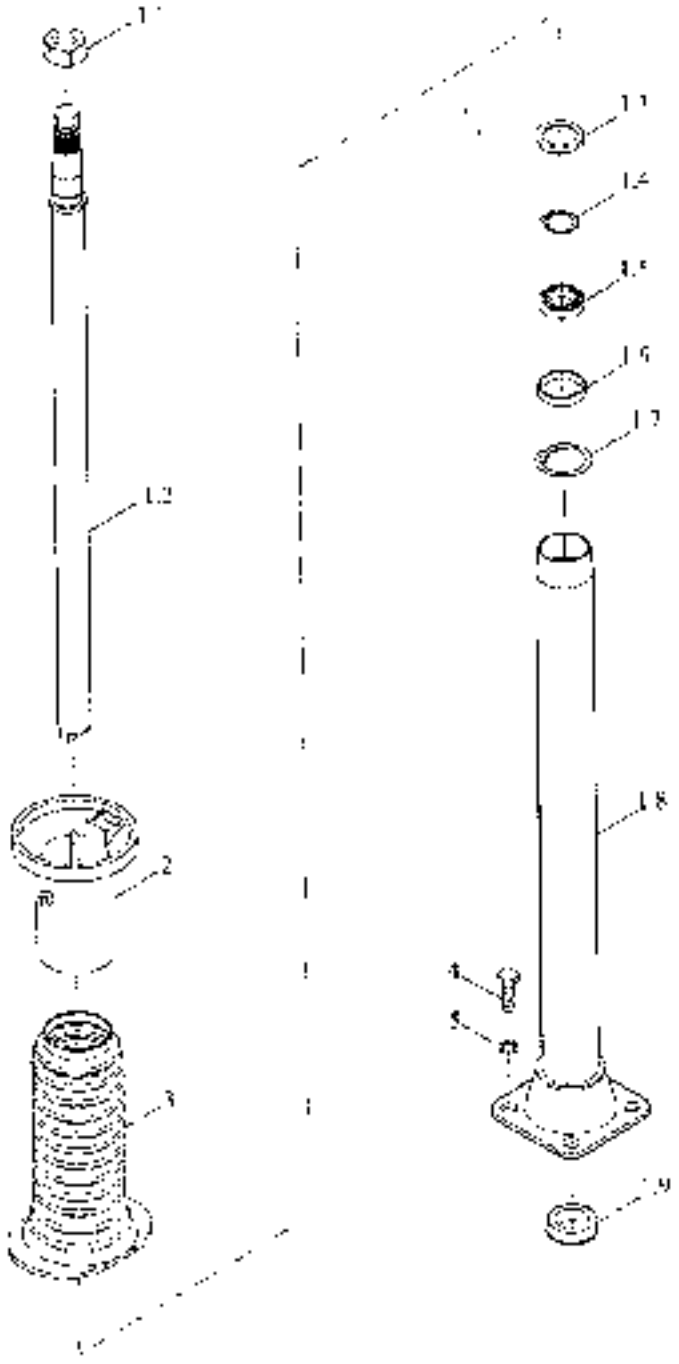

TL01403040000K Steering column assembly (002)

No	Part code and specification	Part name	Quantity	Remark
	TL01403040000K	Steering column assembly assembly	1	
1	TE250403E1	Steering column assembly	1	
1.1	GBT6173-M16X1.5-05-A3L	Six angle thin nut	1	
1.2	TE250403E1-01	Steering rod	1	
1.3	TE650.40.172	Bearing ring	1	
1.4	GBT894.1-20	Circlip for shaft	1	
1.5	GBT276-61804-2RS	Deep groove ball bearing	1	
1.6	TE650.40.173	Bearing ring 2	1	
1.7	GBT893.1-32	Circlip for hole	1	
1.8	TE250.403E.1.1	Steering sleeve welding	1	
1.9	JT254.40.114	Sleeve	1	
2	TL03403010001K	Speaker brush holder assembly	1	
3	TE254.403B-01	Steering rod sheathed	1	
4	GBT5783-M10X30-8.8-A3L	Hex bolt	4	
5	GBT93-10-A3L	Normal type single coil spring lock washer	4	

TE300.411 Power output shaft assembly(6 teeth)

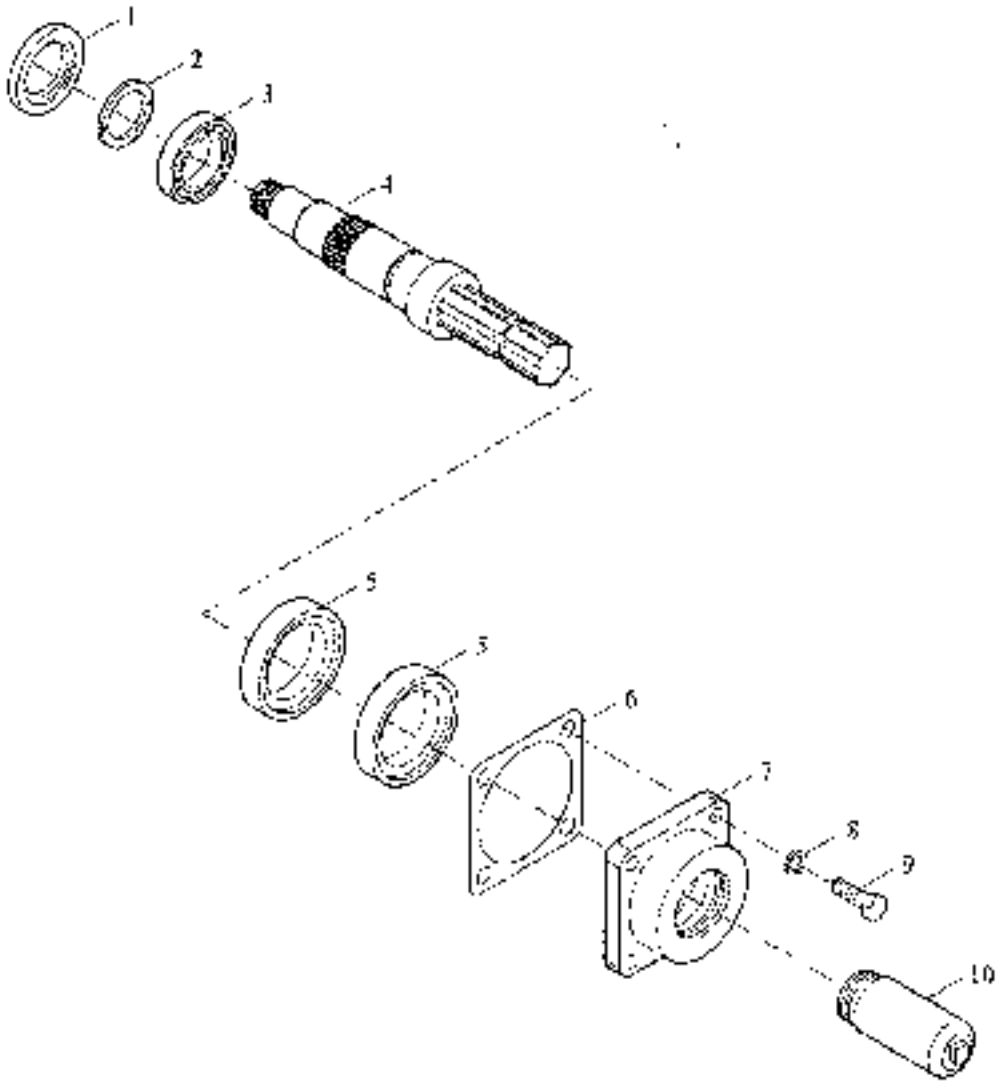

TE300.411 Power output shaft assembly(6 teeth)

No	Part code and specification	Part name	Quantity	Remark
	TE300.411	Power output shaft assembly	1	
1	TE300.411-03	Thrust ring	1	
1	TE300.411-04	Thrust ring	1	
1	TE300.411-05	Thrust ring	1	
2	TE300.411-02	Thrust ring	1	
3	GBT276-6308	Deep groove ball bearings	1	
4	TE300.411-01	Power output shaft	1	
5	GBT9877.1-FB50X72X8D	Lip-shape seal ring	2	
6	FT300.4-136	Back cover 1 pad	1	
7	FT300.41-101	Back cover 1	1	
8	GBT93-10-A0P	Normal type single coil spring lock washer	4	
9	GBT5783-M10X30-8.8-A3L	Hex bolt	4	
10	TB550.412-02	Power output shaft head shield	1	

TE354.412 Power output gear assembly (006)

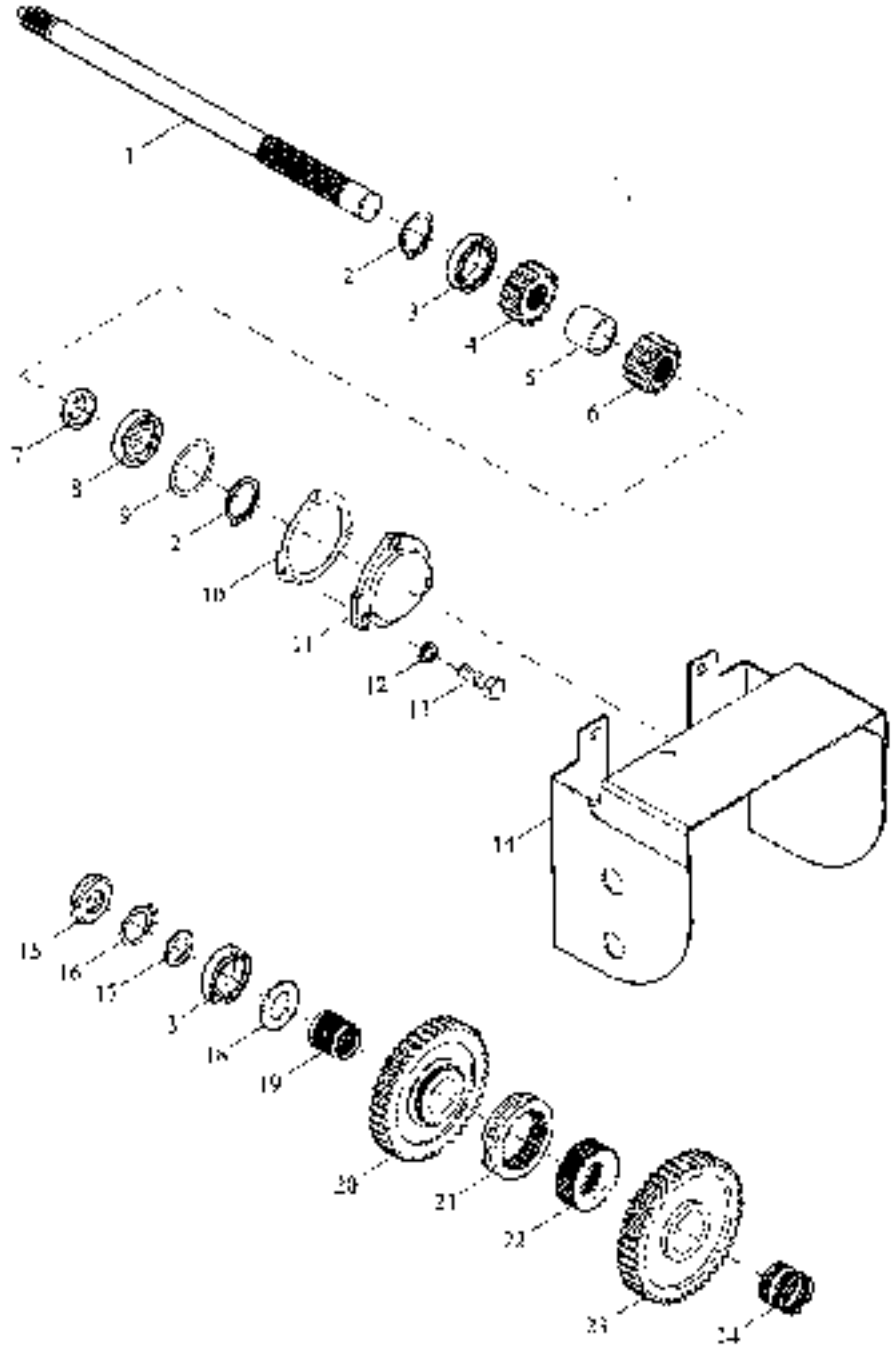

TE354.412 Power output gear assembly (006)

No.	Part code and specification	Part name	Quantity	Remark
	TE354.412	Power output gear assembly	1	
1	TE300.412-01	Power output drive shaft	1	
2	GBT894.1-30	Circlip for shaft	2	
3	GBT276-6306	Deep groove ball bearings	2	
4	TE300.412-02	Power output high-grade active gear	1	
5	TE300.412-03	Before the sleeves	1	
6	TE300.412-04	Power output low-grade active gear	1	
7	TE300.412-05	After the cover	1	
8	GBT276-6306N	Deep groove ball bearings	1	
9	GBT505-72-78.6	Snap ring	1	
10	FT300.41.125	Rear cover II pad	1	
11	TE300.412-09	Rear cover	1	
12	GBT93-8-A2L	Normal type single coil spring lock washer	3	
13	GBT5783-M8X20-8.8-A2L	Hex bolt	3	
14	TE300.412.1	Power output shield welding	1	
15	GBT812-M25X1.5	Round nut	1	
16	GB1858-25	Circular washers for nuts	1	
17	FT300.41.122	Washer	1	
18	FT300.41C.118	Output shaft front ring	1	
19	GBT20056-K35X40X27	Centering needle roller and cage assembly	1	
20	TE300.412-08	Power output high-grade passive gear	1	
21	T1024120Y0005	Power output clutch sleeve	1	
22	FT300.41C.117	Power output meshing seal	1	
23	TE300.412-06	Power output low gear passive gear	1	
24	TE300.412-07	Needle roller bearings- K40X46X24	1	

TE354.413 Power output control mechanism assembly

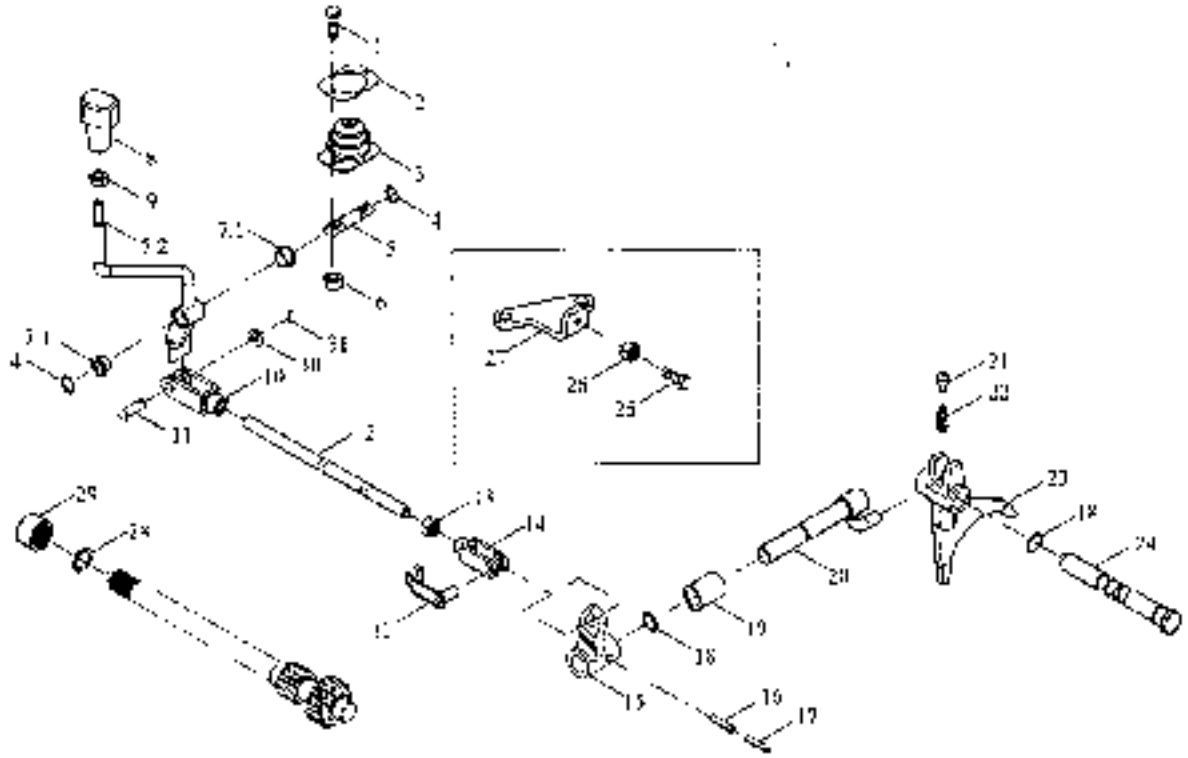

TE354.413 Power output control mechanism assembly

No.	Part code and specification	Part name	Quantity	Remark
	TE354.413	Power output control mechanism assembly	1	
1	GB/T5783 M8X30–8.8–A2L	Hex bolt	2	
2	TE250.413D 07	Tablet	1	
3	TE250.413D–03	Dust cover	1	
4	GB/T894.1 18	Circlip for shaft	2	
5	TE250.413D–04	Fixed shaft	1	
6	GB/T6170 M8 8 A2L	Type 1 hexagon nut	2	
7	TE354.413.4	Joystick	1	
7.1	TE250.413D.2–01	Nylon seat	2	
7.2	TE354.413.4.1	Joystick welding	1	
8	TE250.41.016	Power output shift handle	1	
9	GB/T6170 M10 8 A4L	Type 1 hexagon nut	1	
10	JT800A.438.119	Left–hand levers	1	
11	GB/T91–3.2X20–A0P	Cotter pin	2	
12	TE354.413–01	Middle bar	1	
13	GB/T6172.1 M10–04–A2L	Hexagonal nuts	1	
14	JT800A.438.116	Right–hand lever fork	1	
15	TE354.413.3	Bracket welding	1	
16	GB/T879.1 6X26	Elastic cylindrical pin	1	
17	GB/T879.1–3.5X26	Elastic cylindrical pin	1	
18	GB/T3452.1–11.8X1.80G	Pneumatic O ring rubber seals	2	
19	TE300.413–06	Sleeves	1	
20	TE354.413.1	Shift lever welding	1	
21	TE250.413D–05	Shift seals lock pin	1	
22	JT250.37.048	The fork shaft locks the spring	1	
23	TE300.413–02a	Power output shift fork	1	
24	TE300.413–03a	Power output shift fork shaft	1	
25	GB/T5783–M8X35–8.8–A2L	Hex bolt	1	
26	GB/T6172.1–M8–04–A2L	Hexagonal nuts	1	
27	TE354.413.2 01	Limit plate	1	
28	GB/T893.1–23	Circlip for hole	1	
29	JT300.37.196	Connecting sleeve	1	
30	GB/T882–B20X80–A0P	Pin	2	
31	GB/T97.1–10–A0P	Plain washer	2	

TE254.421B Transfer case assembly(004)

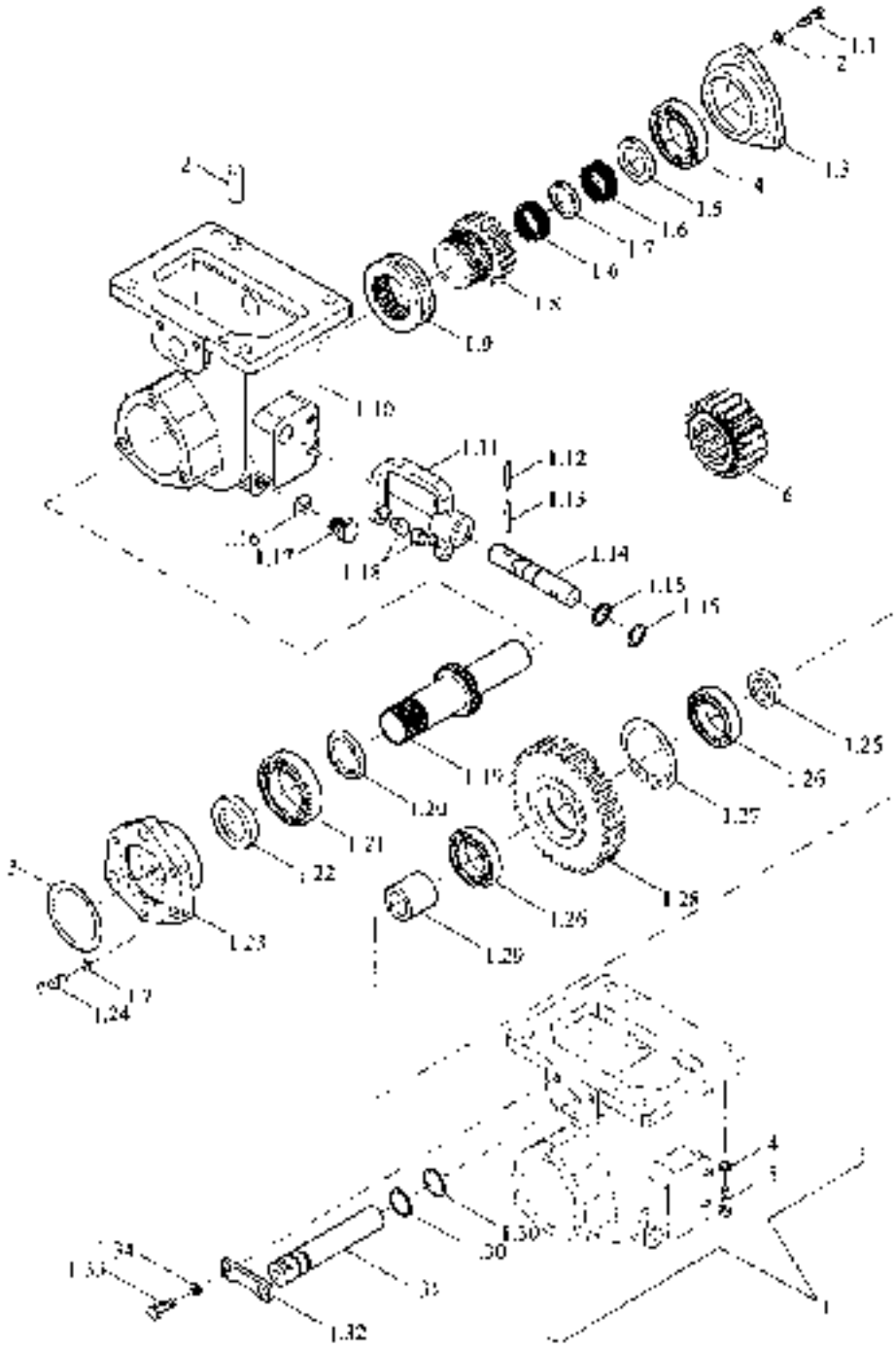

TE254.421B Transfer case assembly(004)

No.	Part code and specification	Part name	Quantity	Remark
	TE254.421B	Transfer box assembly	1	
1	TE254.421B.1	Transfer box body assembly	1	
1.1	GB/T5783-M10X20-8.8-A3L	Hex bolt	3	
1.2	GB/T93-10-A0P	Normal type single coil spring lock washer	4	
1.3	GB/T93-10-A0P	Normal type single coil spring lock washer	6	
1.4	TE254.421A.1-04	Rear bearing cover	1	
1.5	GB/T276-6305	Deep groove ball bearings	1	
1.6	FT254.42.107	Output shaft rear thrust ring	1	
1.7	JB/T7918-K25X30X20	Centering needle roller and cage assembly	2	
1.8	FT254.42.108	Output shaft needle roller bearing spacer	1	
1.9	TE254.421B.1-01a	Transfer case driven gear	1	
1.10	FT254.42F.103	Engagement sets	1	
1.11	TE254.421A.1-01	Transfer case shell	1	
1.12	TE254.421A.1-02	Transfer box fork	1	
1.13	GB/T879.1-6X24	Elastic cylindrical pin	1	
1.14	GB/T879.1-4X24	Elastic cylindrical pin	1	
1.15	TE254.421A.1-03	Transfer box fork shaft	1	
1.16	GB/T3452.1-12.5X1.80G	Pneumatic O-ring rubber seals	2	
1.17	JB/T982-12	Combined sealing washer	1	
1.18	Q617012	Hex head plug	1	
1.19	FT254.42.121	Transfer box fork	2	
1.20	FT254.42.102	Output shaft	1	
1.21	FT254.42.109	Output shaft front thrust ring	1	
1.22	GB/T276-6206	Deep groove ball bearings	1	
1.23	TE254.421.1.1	Oil seal FB30X45X8	1	
1.24	TE254.421A.1-09	Front bearing cover	1	
1.25	GB/T5783-M10X30-8.8-A3L	Hex bolt	3	
1.26	TE254.421A.1-10	The middle shaft assembly thrust ring	1	
1.27	GB/T276-6204	Deep groove ball bearings	2	
1.28	GB/T893.1-47	Hole with elastic ring	1	
1.29	TE254.421B.1-02	Transfer gear intermediate gear	1	
1.30	TE254.421A.1-11	Intermediate shaft thrust ring	1	
1.31	GB/T3452.1-15.0X2.65G	Pneumatic O-ring rubber seals	2	
1.32	TE254.421A.1-05	Intermediate shaft	1	
1.33	TE254.421A.1-07	Intermediate axis positioning plate	1	
1.34	GB/T5783-M8X20-8.8-A2L	Hex bolt	2	
2	GB/T93-8-A0P	Normal type single coil spring lock washer	2	
3	GB/T879.1-10x6X18-A0P	Round pin	2	
4	GB/T3452.1-55.0X2.65G	Pneumatic O-ring rubber seals	1	
5	GB/T5783-M10X30-10.9-A3L	Hex bolt	2	
6	TE300L361-0C	Front drive gears	1	

TE354.422 Transfer gear shaft and shield assembly(005)

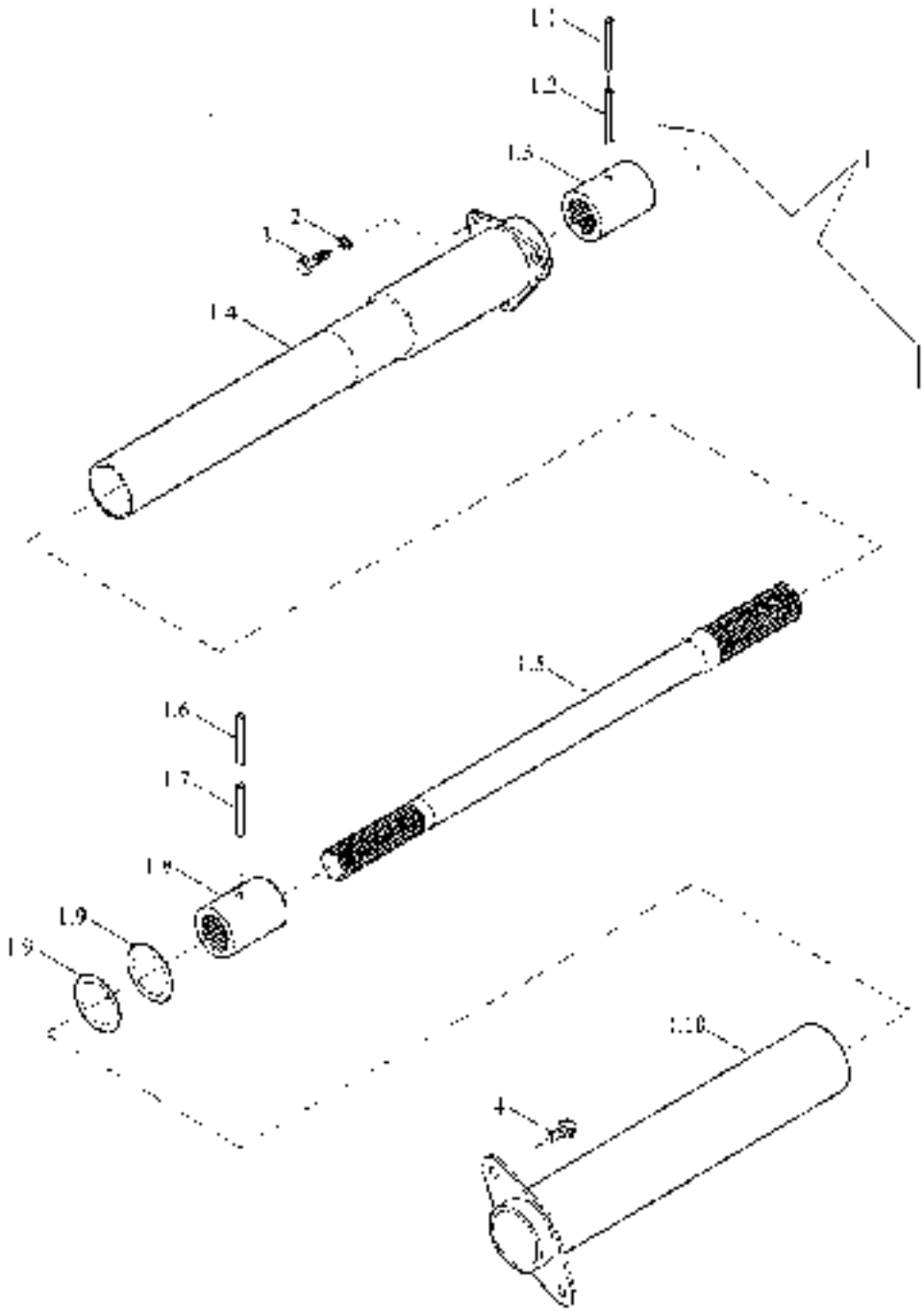

TE354.422 Transfer gear shaft and shield assembly

No	Part code and specification	Part name	Quantity	Remark
	TE354.422	Transfer box drive shaft assembly	1	
1	TE354.422.1	Transfer box drive shaft assembly	1	
1.1	GBT879.1-3.5X40	Elastic cylindrical pin	1	
1.2	GBT879.1-6X40	Elastic cylindrical pin	1	
1.3	FT254.42.213	Spline bushing	1	
1.4	TE354.422.1.1	After the casing casing welding	1	
1.5	TE354.422.1-01	Transfer box drive shaft	1	
1.6	GBT879.1-3.5X35	Elastic cylindrical pin	1	
1.7	GBT879.1-6X35	Elastic cylindrical pin	1	
1.8	FT254.42F.120	Front spline sets	1	
1.9	GBT3452.1-46.2X3.55G	Pneumatic O - ring rubber seals	1	
1.10	TE254.422A.1.1	Front Casing Welding	1	
2	GBT93-8-A2L	Normal type single coil spring lock washers	3	
3	GBT5783-M8X16-8.8-A2L	Hex bolt	3	
4	GBT5789-M8X16-10.9-A2L	Hexagonal flange bolts	2	

TE254.423C Transfer box control assembly (007)

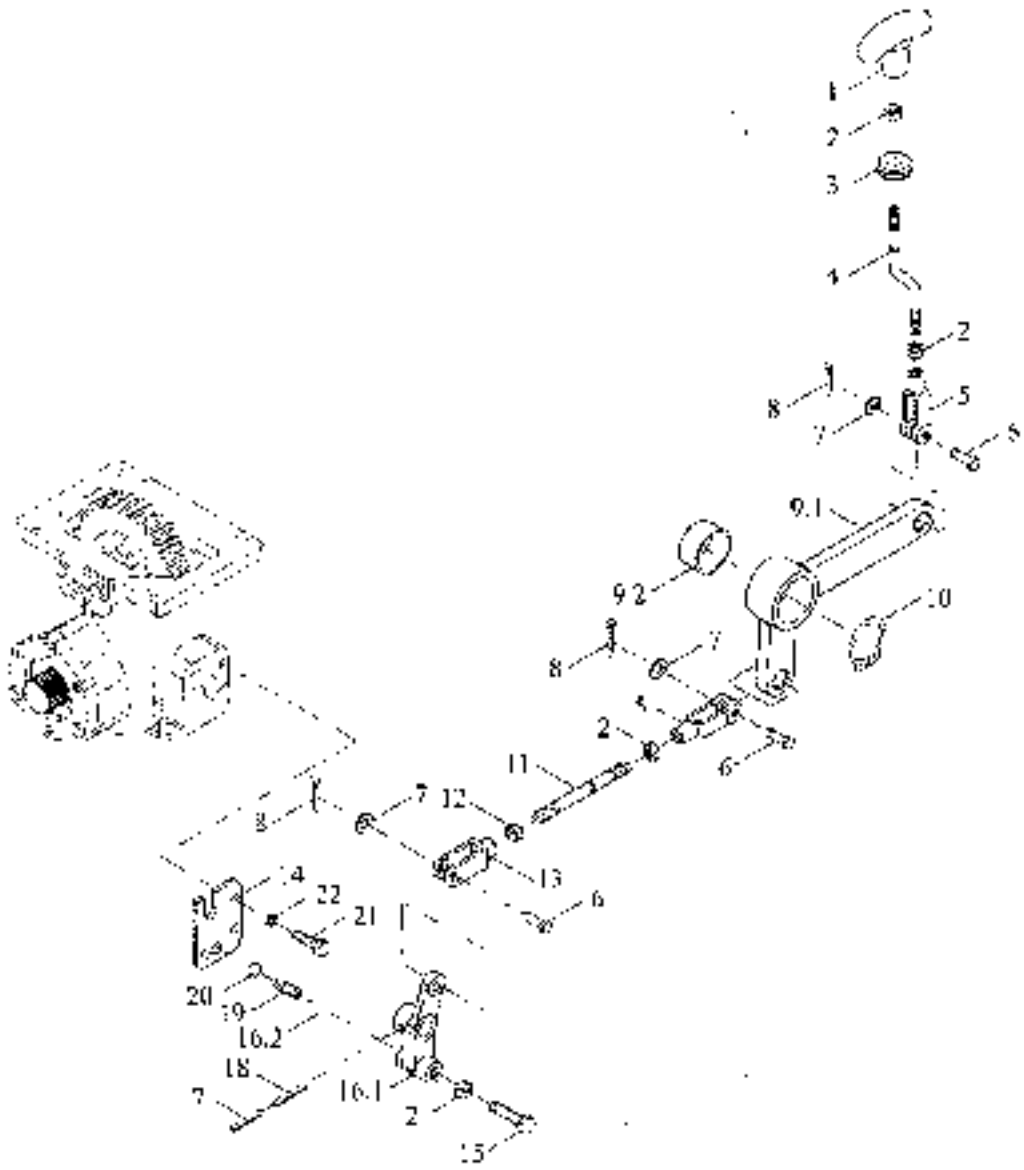

TE254.423C Transfer box control assembly (007)

No.	Part code and specification	Part name	Quantity	Remark
	TE254.423L	Transfer box handling assembly	1	
1	FT65.38.051	Pull the handle	1	
2	GBT6170-M10-8-A3L	Type 1 hexagon nut	4	
3	TE254.423A-01	Threading sprocs	1	
4	TE254.423C-01	Joystick	1	
5	FT300.43.108	Drawer lock	1	
6	GBT882-B10X30-A3P	Circlip for shaft	3	
7	GBT97.1-10-A0P	Plain washer	1	
8	GBT91-3.2X20-A0P	Cotter pin	3	
9	TE254.423C.1	Middle rocker pieces	1	
9.1	GBT894.1-20	Circlip for shaft	1	
9.2	TE254.423C-02	Middle bar	1	
10	GBT5170-M10-LH-8-A2L	Type 1 hexagon nut	1	
11	FT800A.431.119	Left hand levers	1	
12	TE254.423A-05	Positioning plate	1	
13	GBT5783-M10X25-8.8-A3I	Hex bolt	1	
14	TE254.423A.1	Rocker pieces	1	
15	GB1809.1-3.5X24	Elastic cylindrical pin	1	
16	GB1809.1-6X24	Elastic cylindrical pin	1	
17	FT304.42.124	Positioning spring	1	
18	GBT308-8-G100-1	Steel ball	1	
19	GBT5783-M8X20-8.8-A2L	Hex bolt	2	
20	GBT93-8-A0P	Normal type single coil spring lock washer	2	
21	TE254.423C.1.1	Intermediate rocker welding	1	
22	TE254.423C.1-01	Intermediate rocker bushings	1	

TE354.431A Brake assembly (006)

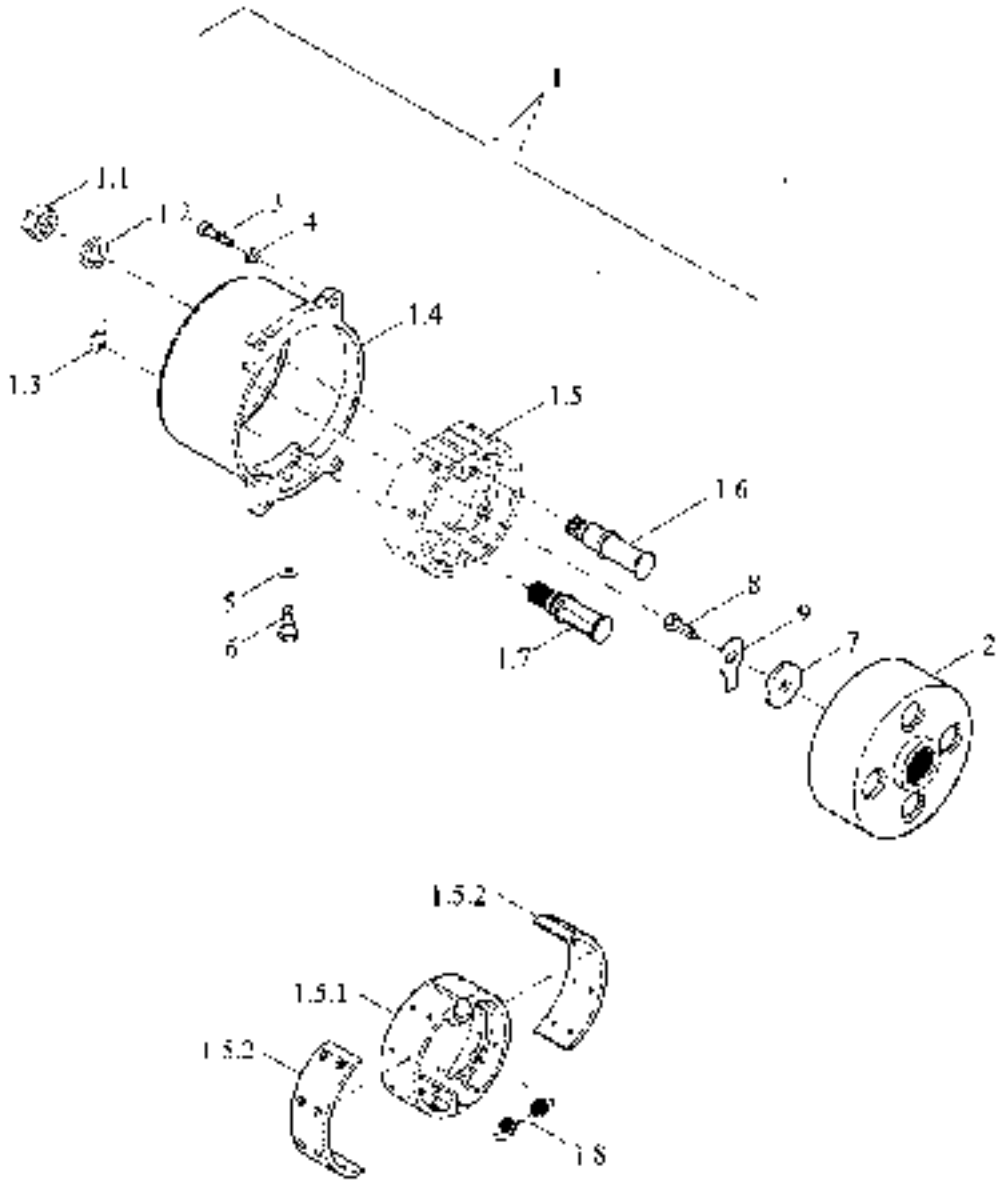

TE354.431A Brake assembly (006)

No.	Part code and specification	Part name	Quantity	Remark
	TE354.431A	Brake assembly	1	
1	TE354.431A.2	Brake housing fit	1	
1.1	GBT6170–M16–8–A3F	Type 1 hex nuts	1	
1.2	GB/93–16–A3F	Normal type single coil spring lock washers	1	
1.3	GB/3452.1–15.0X2.65G	Pneumatic O – ring rubber seals	1	
1.4	TE354.431A–03	Brake shoe I	1	
1.5	TE354.431A.1	Brake shoe assembly	1	
1.5.1	TE354.431A.1–01	Brake shoes	1	
1.5.2	TE354.431A.1–02	Brake friction plate	2	
1.6	TE354.431A–02	Brake shoe pin	1	
1.7	TE354.431A–04	Brake cam	1	
1.8	TE354.431A–05	Return spring	2	
2	TE354.431A–03	Brake drum	1	
3	GBT70.1–M8X20–8.8	Hexagon socket cap head screw	4	
4	GBT93–8–A3I	Normal type single coil spring lock washers	4	
5	JBT982–8	Combined sealing washer	1	
6	GBT5783–M8X16–8.8–A2L	Hex bolt	1	
7	FT250L43.101	Washer	1	
8	GBT5783–M12X30–8.8–A3L	Hex bolt	1	
9	FT250L43.104a	Single coil stop washer	1	

TE354.433B Brake control assembly-1

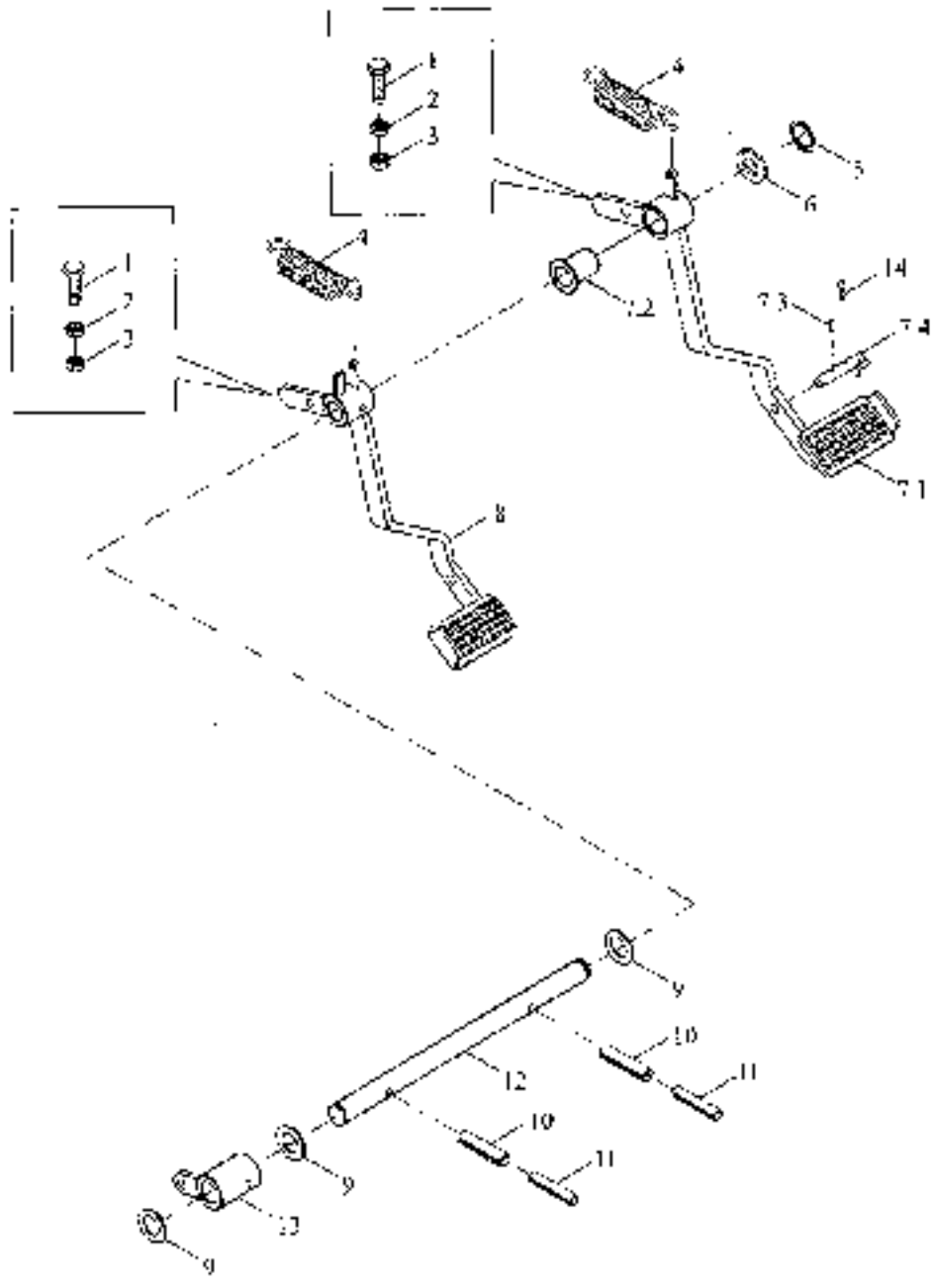

TE354.433B Brake control assembly-1

No.	Part code and specification	Part name	Quantity	Remark
	TE354.433B	Brake control assembly	1	
1	GB/T 5783-M10×35-8.8-A3L	Hex bolt	2	
2	GB/T 6172.1-M10-04-A3L	Hexagonal nuts	2	
3	GB/T 6170-M10-8-A3L	Type 1 hexagon nut	2	
4	TE250.212D-05	Clutch pedal return spring	2	
5	GB/T 894.1-25	Circlip for shaft	1	
6	GB/T 97.1-24-A0P	Plain washer	1	
7	TE250.433C.2	Right brake pedal assembly	1	
7.1	TE250.433C.2-1	Right brake pedal welding	1	
7.2	TE250.433C.2-01	Bushing	1	
7.3	GB/T 879.1-5×16	Elastic cylindrical pin	1	
7.4	TE250.433C.2-2	Brake interlocking rod welding	1	
8	TE250.433C.1a	Left brake pedal welding	1	
9	TE250.433C-02	Gasket	3	
10	GB/T 879.1-10×40	Elastic cylindrical pin	2	
11	GB/T 879.1-6×40	Elastic cylindrical pin	2	
12	TE250.433C-01	Brake shaft	1	
13	TE250.433C.3	Left rocker welding	1	
14	81600A.43.401	Lock pin	1	

TE354.433B Brake control assembly-2

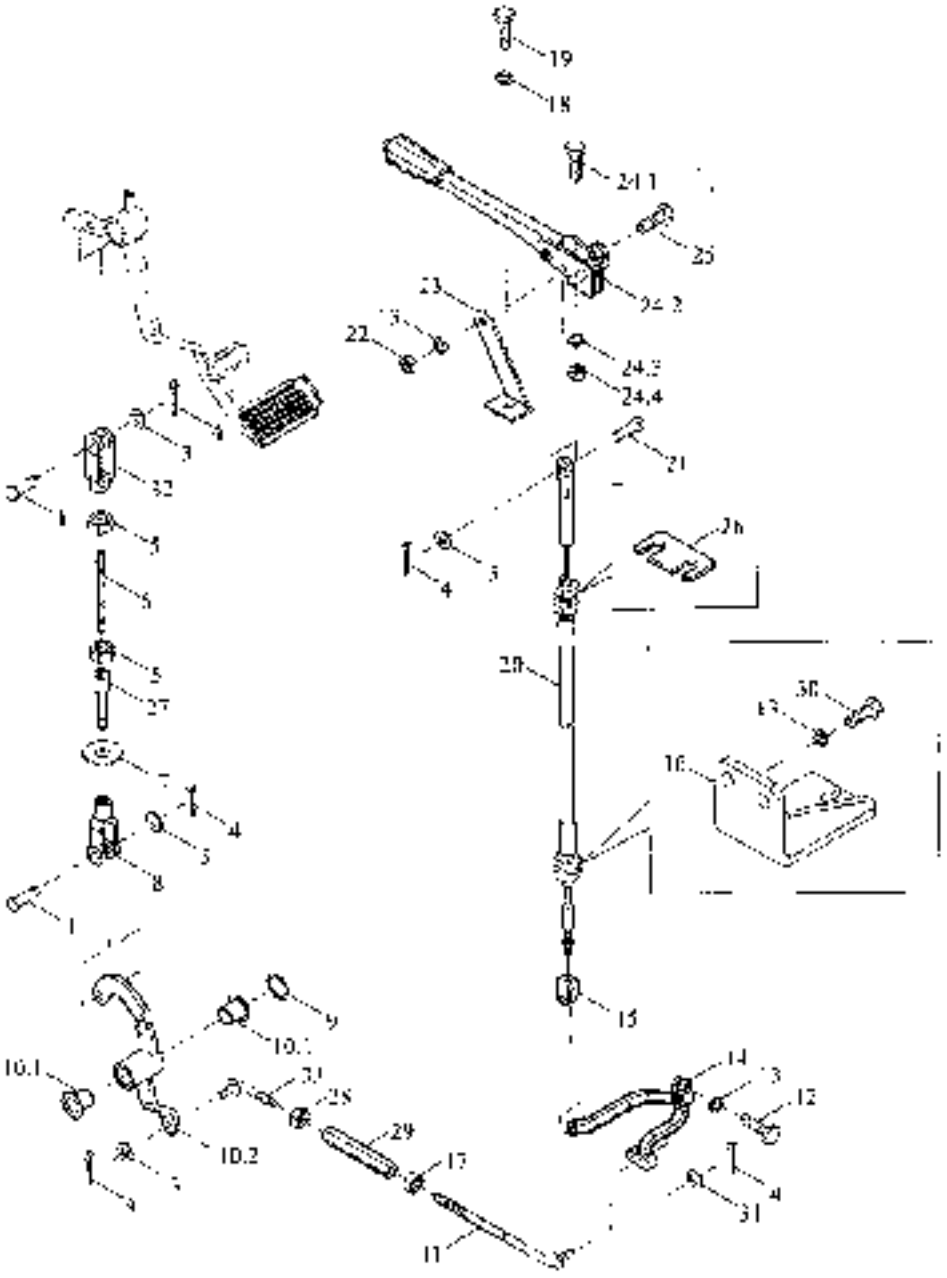

TE354.433B Brake control assembly-2

No.	Part code and specification	Part name	Quantity	Remark
	TE354.433B	Brake control assembly	1	
1	GB/T 882-B10×30-A0P	Pin	2	
2	PT300.43.110	Rod after fork	1	
3	GB/T 97.1-10-A0P	Plain washer	4	
4	GB/T 91-3.2×22-A0P	Cotter pin	5	
5	GB/T 6171-M10×1-8-A2L	Type 1 hexagon nut	2	
6	TE250.433C-14	Brake upper connecting rod	1	
7	TE250.433C-08	Rubber seat plate	1	
8	PT300.43.108	Drawer fork	1	
9	GB/T 894.1-20	Connecting plate	1	
10	TE354.433.6	Right lower rocker assembly	1	
10.1	TE250.433C.4-01	Bushing	2	
10.2	TE354.433.6.1	Bottom right rocker welding	1	
11	TE354.433B.2	Right brake fork shaft welding	1	
12	GB/T 5783-M8×25-8.8-A2L	Hex bolt	2	
13	GB/T 93-8-A0P	Normal type single coil spring lock washers	5	
14	TE354.433-02	Right brake rocker	1	
15	TE250.433C-11	Connection fork	1	
16	TE254.433.1	Right bearing welding	1	
17	GB/T 6171-M12×1.5-8-A3L	Type 1 hexagon nut	2	
18	GB/T 93-10-A0P	Normal type single coil spring lock washers	2	
19	GB/T 5783-M10×25-8.8-A3L	Hex bolt	2	
20	TE250.433C.8	Right brake cable assembly	1	
21	GB/T 882-B10×35-A0P	Pin	1	
22	GB/T 6170-M8-8-A2L	Type 1 hexagon nut	1	
23	TE250.433C.19	Ratchet bracket welding	1	
24	TE250.433C.7	Handbrake cable assembly	1	
24.1	GB/T 5782-M8×30-A2L	Hex bolt	2	
24.2	TE250.433C.7.1	Handbrake cable	1	
24.3	GB/T 93-8-A0P	Normal type single coil spring lock washers	2	
24.4	GB/T 6170-M8-A2L	Type 1 hexagon nut	2	
25	GB/T 5783-M8×35-8.8-A2L	Hex bolt	1	
26	TE250.433C-12	Brake cable on the lever plate	1	
27	TE250.433C.17	Brake short rod welding	1	
28	GB/T 6171-M12×1.5-HE-8-A3L	Type 1 hexagon nut	1	
29	TE354.433-03	Connecting rod	1	
30	GB/T 5783-M8×20-8.8-A2L	Hex bolt	2	
31	GB/T 97.1-12-A0P	Plain washer	4	
32	GB/T 6170-M10-8-A4L	Type 1 hexagon nut	1	
33	TE354.433B.3	Right brake short rod welding	1	

TE354.433B Brake control assembly-3

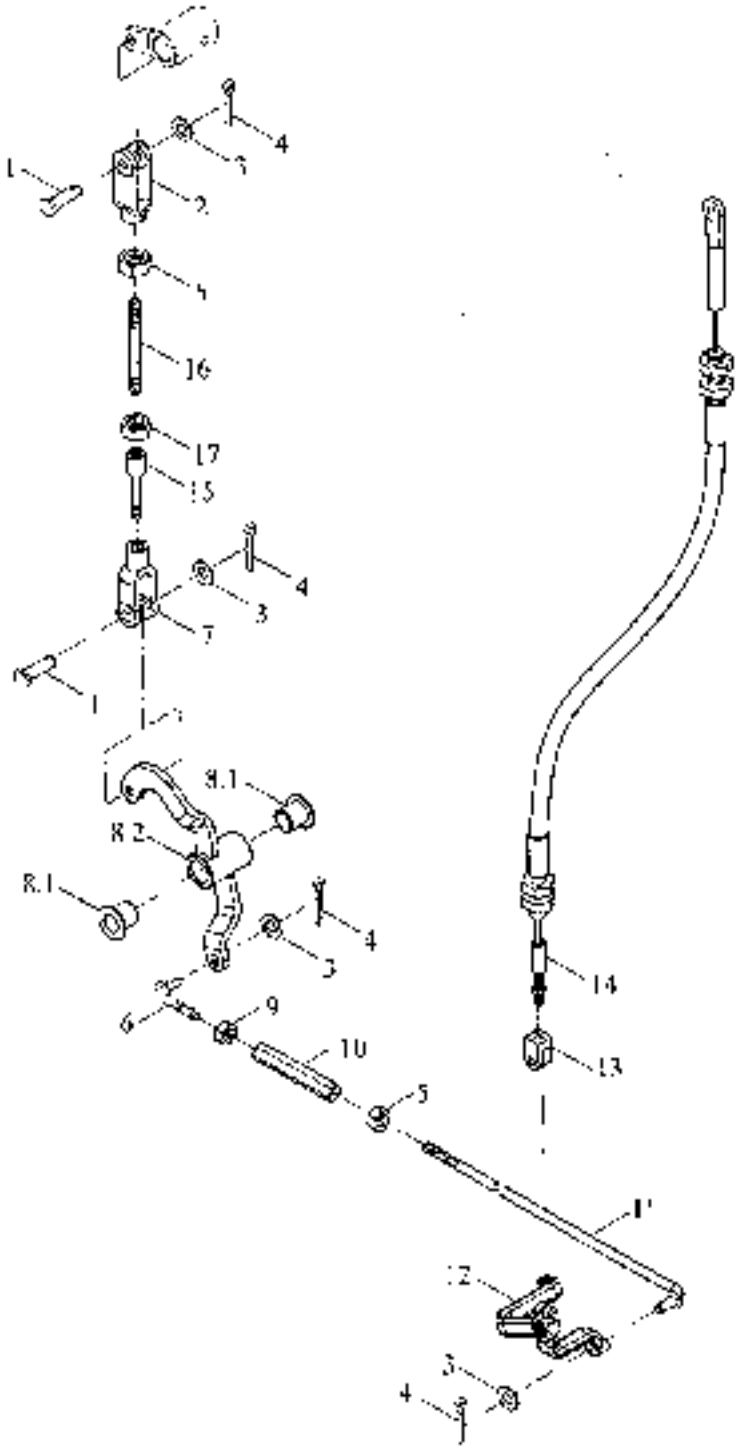

TE354.433B Brake control assembly-3

No.	Part code and specification	Part name	Quantity	Remark
	TE354.433B	Brake control assembly	1	
1	GB/T 882 B10×30 A0P	Pin	5	
2	PT301.43.110	Rod after fork	1	
3	GB/T 97.1-10 A0P	Plain washer	3	
4	GB/T 91 3.2×22-A0P	Cotter pin	6	
5	GB/T 6170-M10-8-A3L	Type 1 hexagon nut	2	
6	TE354.433.4	Brake short rod welding	1	
7	PT301.43.108	Drawer fork	1	
8	TE354.433.5	Left lower arm assembly	1	
8.1	TE250.433C.4-01	Bushing	2	
8.2	TE354.433.5.1	Left lower rocker welding	1	
9	GB/T 6172 M12×1.5 LH 8 A3L	Type 1 hexagon nut	1	
10	TE354.433-03	Connecting rod	1	
11	TE354.433B.1	Left brake long rod welding	1	
12	TE354.444-01n	Left brake rocker	1	
13	TE250.433C-11	Connection fork	1	
14	TE250.433C.12	Left brake cable assembly	1	
15	TE250.433C.17	Brake short rod welding	1	
16	TE250.433C-14	Brake upper connecting rod	1	
17	GB/T 6171-M10×1-8-A2L	Type 1 hexagon nut	1	

TE300.44 Seat assembly(004)

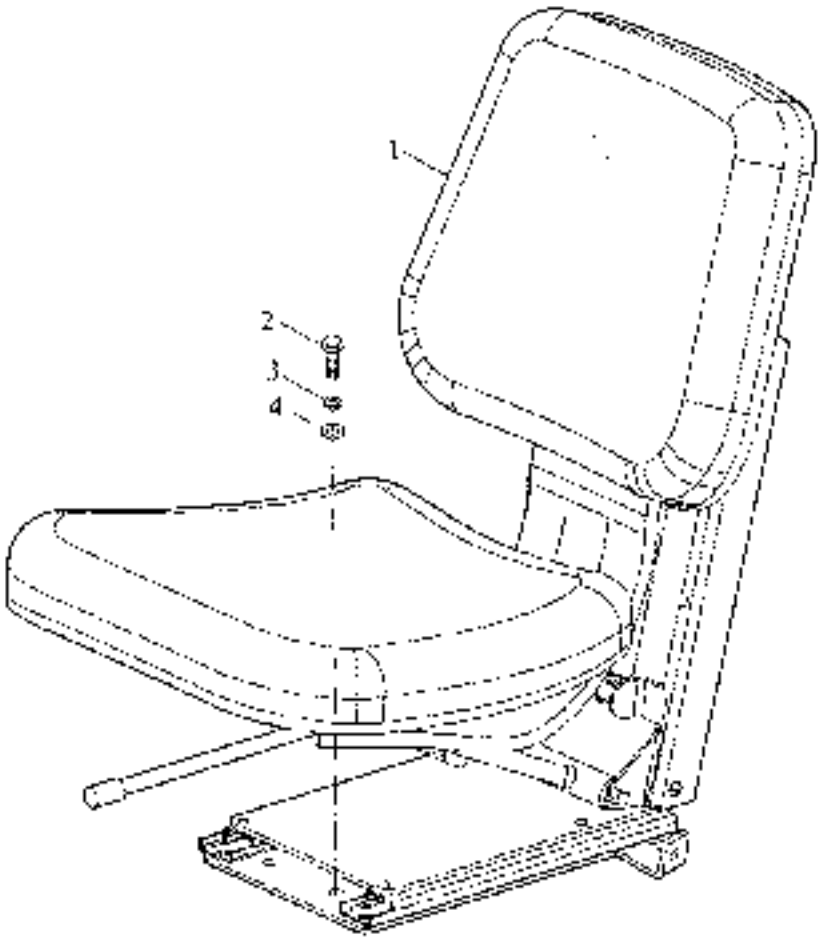

TE300.44 Seat assembly(004)

No.	Part code and specification	Part name	Quantity	Remark
	TE300.44	Seat mounting assembly	1	
1	TE250.44A.1	Seat assembly	1	
2	GBT5783-M8X25-8.8-A2L	Hex bolt	4	
3	GB93-8-A0P	Normal type single coil spring lock washer	4	
4	GBT97.1-8-A0P	Plain washer	4	

TE250.472F Floor assembly-1(013)

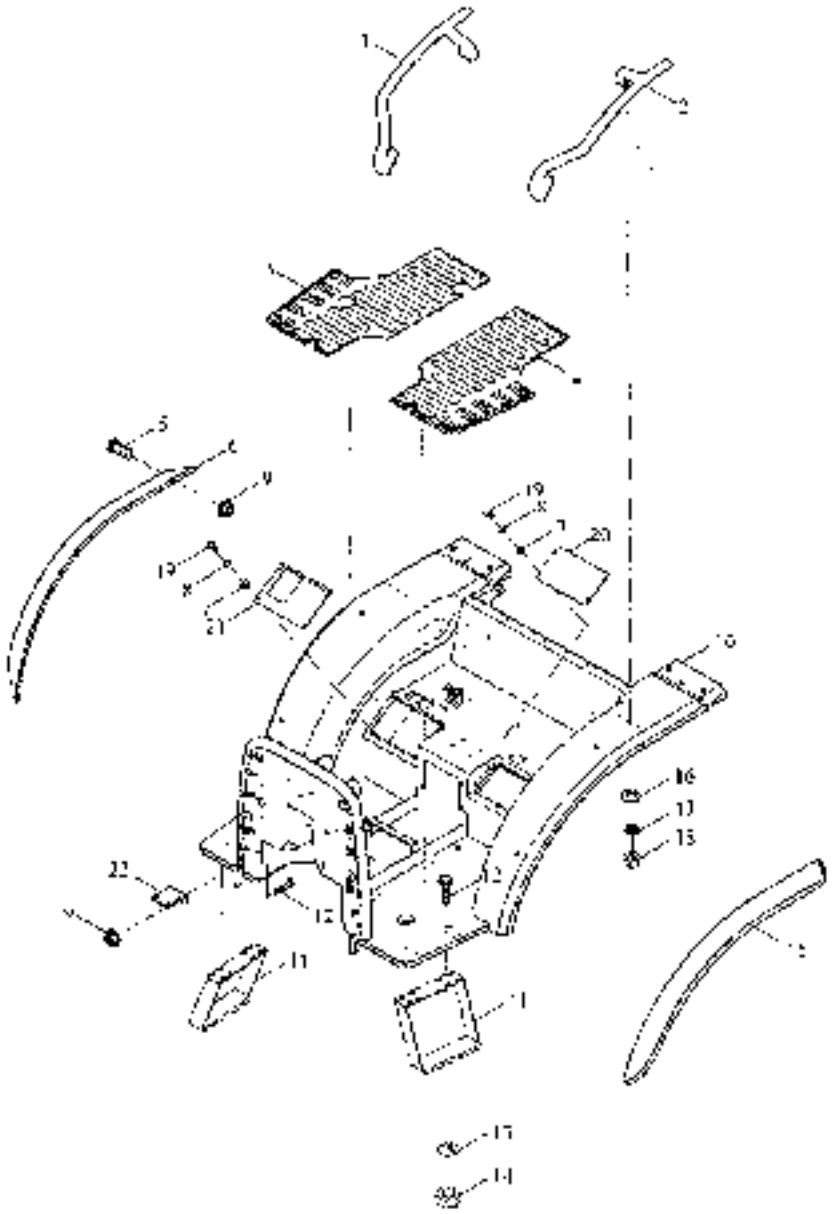

TE250.472F Floor assembly-1(013)

No.	Part code and specification	Part name	Quantity	Remark
	TE250.472F	Floor assembly assembly	1	
1	TE254.472-02	Right armrest	1	
2	TE254.472-01	Left armrest	1	
3	TE250.472F-03	Right floor mat	1	
4	TE250.472F-02	Left floor mat	1	
5	GB/T5783-M5X16-8.8-A2L	Hex bolt	4	
6	TE254.472-02	Outer part of right fender	1	
7	GB/T97.1-5-A3L	Plain washer	8	
8	GB/T93-5-A3L	Normal type single coil spring lock washer	8	
9	QC/T866-M5	Face nut with six angle flange face	14	
10	TE250.472F.1	Floor welding	1	
11	TE254.472.3	Pedal welding	2	
12	GB/T5783-M8X20-8.8-A2L	Hex bolt	10	
13	GB/T93-8-A3L	Normal type single coil spring lock washer	4	
14	GB/T6170-M8-8-A2L	Type 1 hexagon nut	4	
15	TE254.472-01	Left fender outer part	1	
16	GB/T96.1-16-A2L	Big washers	4	
17	GB/T93-16-A3L	Normal type single coil spring lock washer	4	
18	GB/T6170-M16-8-A3L	Type 1 hexagon nut	4	
19	GB/T5783-M5X12-8.8-A2L	Hex bolt	8	
20	TE254.472-14	Cover plate	1	
21	TE254.472-13	Central cover plate	1	
22	TE250.472F-04	Manostable valve bracket	1	

TE250.472F Floor assembly-2(013)

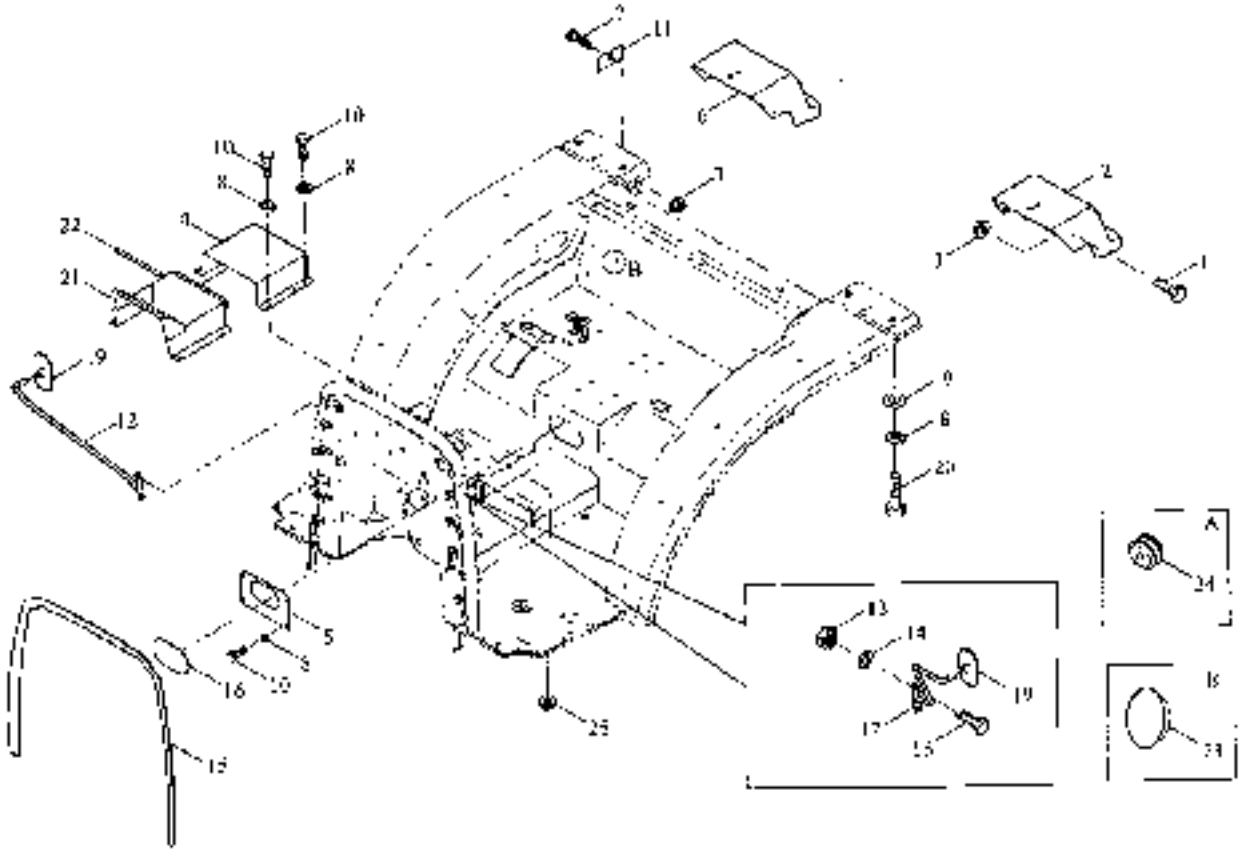

TE250.472F Floor assembly-2(013)

No.	Part code and specification	Part name	Quantity	Remark
	TE01452130000K	Floor assembly assembly	1	
1	GBT5783-M5X16-8.8-A2L	Hex bolt	2	
2	TE324.472.1-01	Left fender post	1	
3	GBT97.1-5-A0P	Plain washer	3	
4	GBT93-5-A0P	Normal type single coil spring lock washers	1	
5	GBT6170-M5-8-A2L	Type 1 hexagon nut	2	
6	TE324.472.2-01	Right fender post	1	
7	GBT6170-M6-8-A2L	Type 1 hexagon nut	2	
8	GBT93-6-A0P	Normal type single coil spring lock washers	10	
9	GBT97.1-6-A0P	Plain washer	14	
10	GBT5783-M6X16-8.8-A2L	Hex bolt	14	
11	GBT5781-M6X16-4.8-A2L	Hex bolt	1	
12	TE250.472F.2	Rear view mirror right bracket welding	1	
13	GBT6170-M8-8-A2L	Type 1 hexagon nut	6	
14	GBT93-8-A0P	Normal type single coil spring lock washers	10	
15	TE250.472F.01	Seal	1	
16	TE254.472.10	Rear floor cover	1	
17	TE324.473.2	Rear view mirror bracket welding	1	
18	GBT5783-M8X50-8.8-A2L	Hex bolt	4	
19	TH400.456A.3	Rear view mirror assembly	2	
20	GBT5783-M6X12-8.8-A2L	Hex bolt	8	
21	TE250.472F.3	Welding on the cover plate	1	
22	TE250.472F.05	Sealing strip	1	
23	TE250.472E.06	Blockages	3	
24	TG1206.204.02	Threading sperm	1	
25	TE250.472F.06	Rear cover	1	
26	TE250.472F-07	Upper cover	1	

TE254.457 Front connection assembly (004)

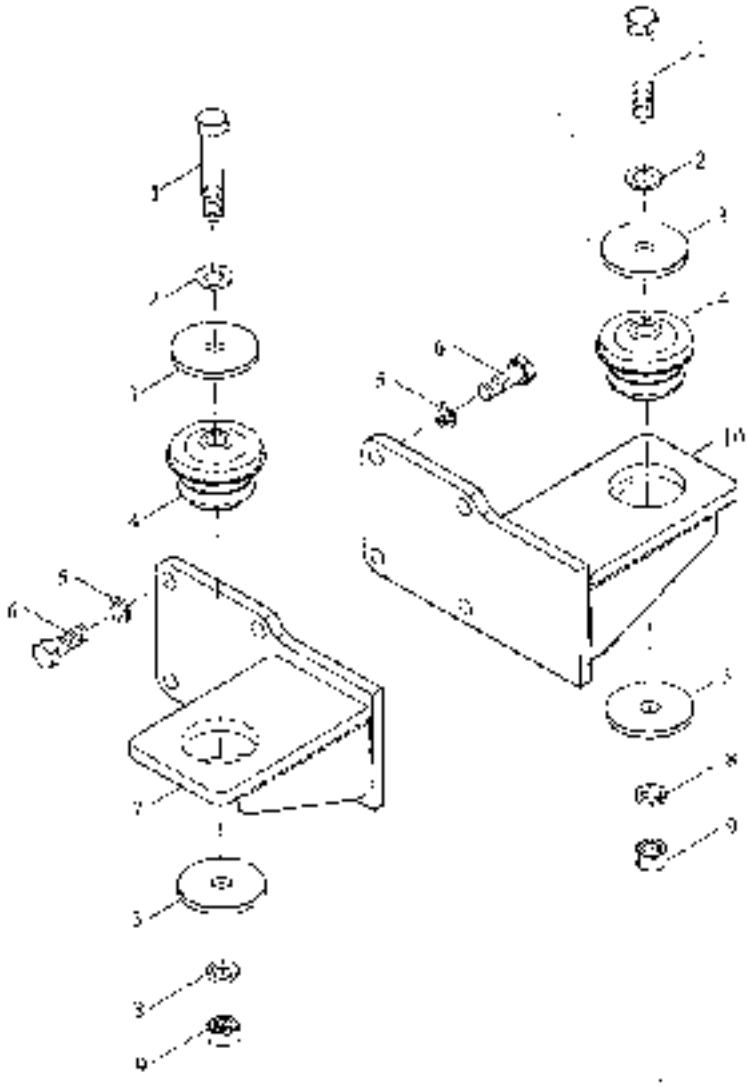

TE254.457 Front connection assembly (004)

No.	Part code and specification	Part name	Quantity	Remark
	TE254.457	Front connection assembly (004)		
1	GBT5783–M10X90–8.8–A2F	Hex bolt	2	
2	GBT97.1–16–A0P	Plain washer	2	
3	TE254.457–0E	Retaining ring	4	
4	TE254.457.3	Damping blocks	2	
5	GBT93–14–A0P	Normal type single coil spring lock washer	8	
6	GBT5783–M14X40–8.8–A3L	Hex bolt	8	
7	TE254.457.1	Left front mounting bracket	1	
8	GBT93–16–A0P	Normal type single coil spring lock washer	2	
9	GBT6170–M16–8–A3L	Big washer	2	
10	TE254.457.2	Right front mounting bracket (welded)	1	

TE354.458 Rear connection assembly (004)

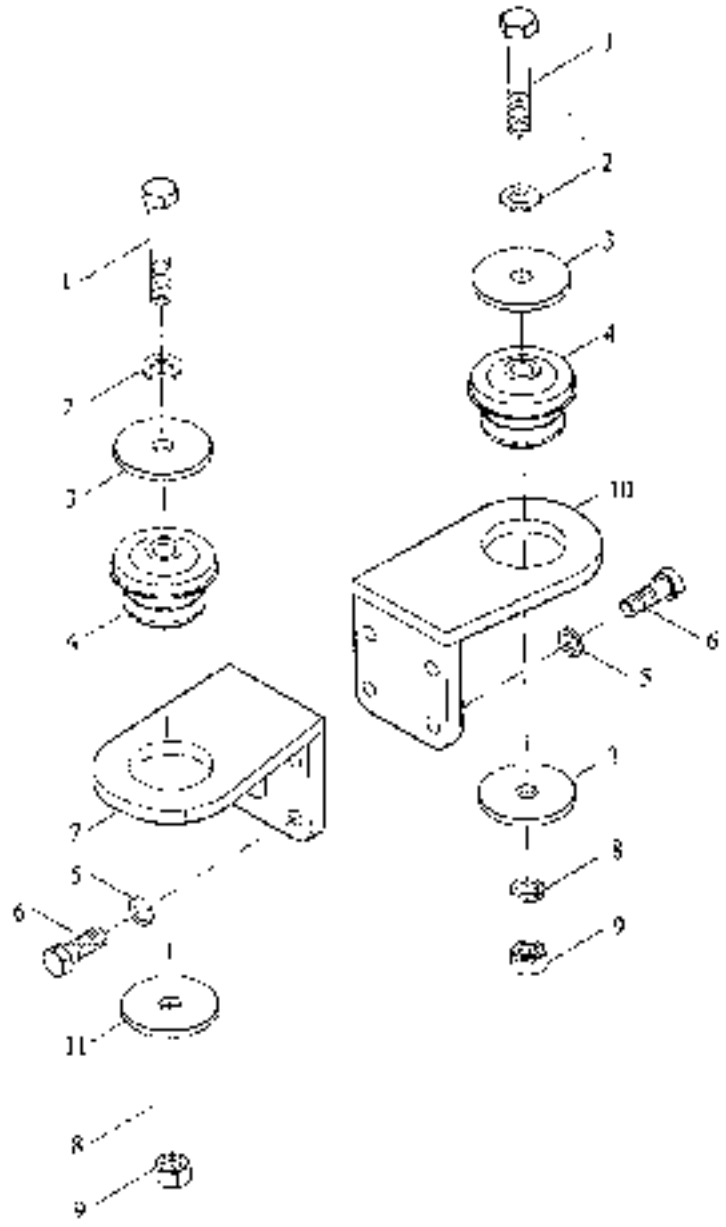

TE354.458 Rear connection assembly (004)

No.	Part code and specification	Part name	Quantity	Remark
	TE354.458	Rear connection assembly (004)	1	
1	GBT5783-M16X90-8.8-A2L	Hex bolt	2	
2	GBT97.1 16 A0P	Plain washer	2	
3	TE254.457.01	Cotter pin	3	
4	TE254.457.3	Damping blocks	2	
5	GBT93-12-A0P	Normal type single coil spring lock washer	8	
6	GBT5783-M12X30-8.8-A5L	Hex bolt	8	
7	TE354.458.1	Left rear mounting bracket	1	
8	GB93 16 A0P	Normal type single coil spring lock washer	1	
9	GB6170 M16-8-A3L	Type 1 hexagon nut	1	
10	TE354.458.2	Right rear mounting bracket is welded	1	
11	TE254.458.3	Ramp welding	2	

TE250.471C Hood assembly(012)

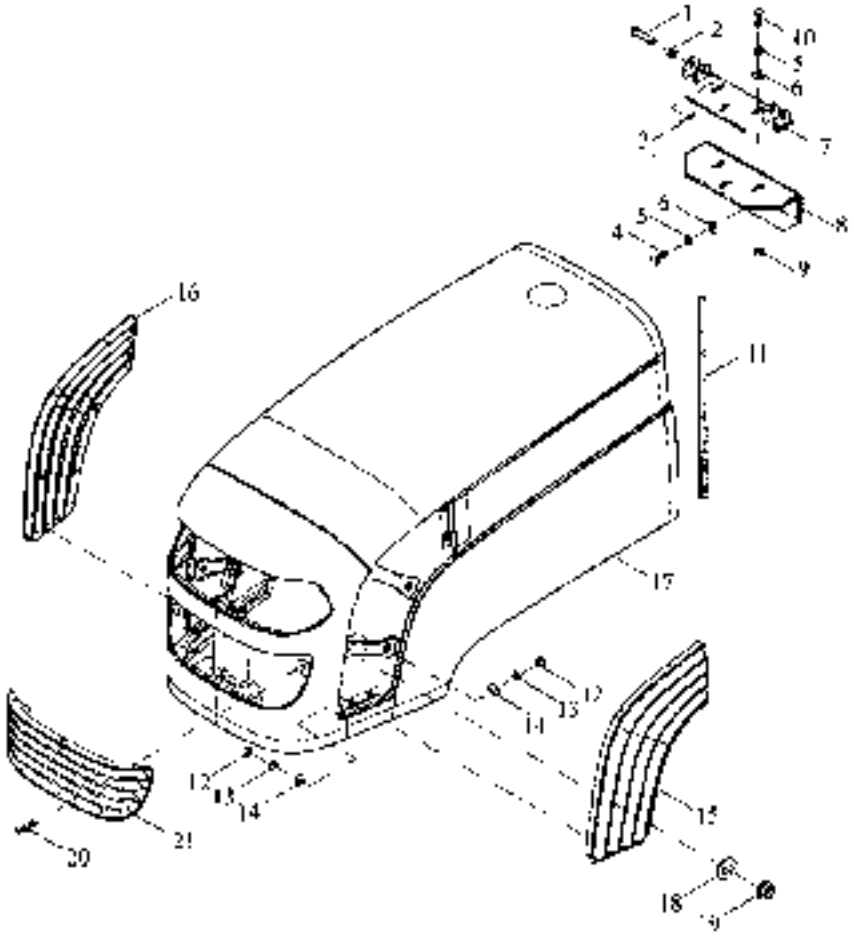

TE250.471C Hood assembly(012)

No.	Part code and specification	Part name	Quantity	Remark
	TE250.471C	Hood assembly assemble (012)	1	
1	GB1882–B12X50	Pin	2	
2	GB97.1–12–A0P	Plain washer	2	
3	GB91–4X20–A0P	Cotter pin	2	
4	GB5783–M10X40–8.8–A3L	Hex bolt	3	
5	GB93–10–A0P	Normal type single coil spring lock washers	6	
6	GB97.1–10–A0P	Plain washer	9	
7	TE250.471C.1	Hinged welding	1	
8	TE250.471C.2	Hood fixture welding	1	
9	GB6170–M10–8–A3L	Type 1 hexagon nut	3	
10	GB5783–M10X35–8.8–A3L	Hex bolt	3	
11	FT250.47C.230	Hood seal	1	
12	GB6170–M6–8–A2L	Type 1 hexagon nut	2	
13	GB93–6–A0P	Normal type single coil spring lock washers	2	
14	GB97.1–6–A0P	Plain washer	2	
15	FT2500.47.302	Left front grid	1	
16	FT2500.47.303	Right front raster	1	
17	TE250.471C.4	Hood welding	1	
18	GB96.1–5–A0P	Big washer	16	
19	QC/T864–M5	Hexagon flange face with tooth nut	16	
20	GB818–M6X16–4.8–A2L	Cross recessed countersunk head screws	2	
21	FT250B.47.301	Front hood raster	1	

TE250.474C Instrument panel assembly (001)

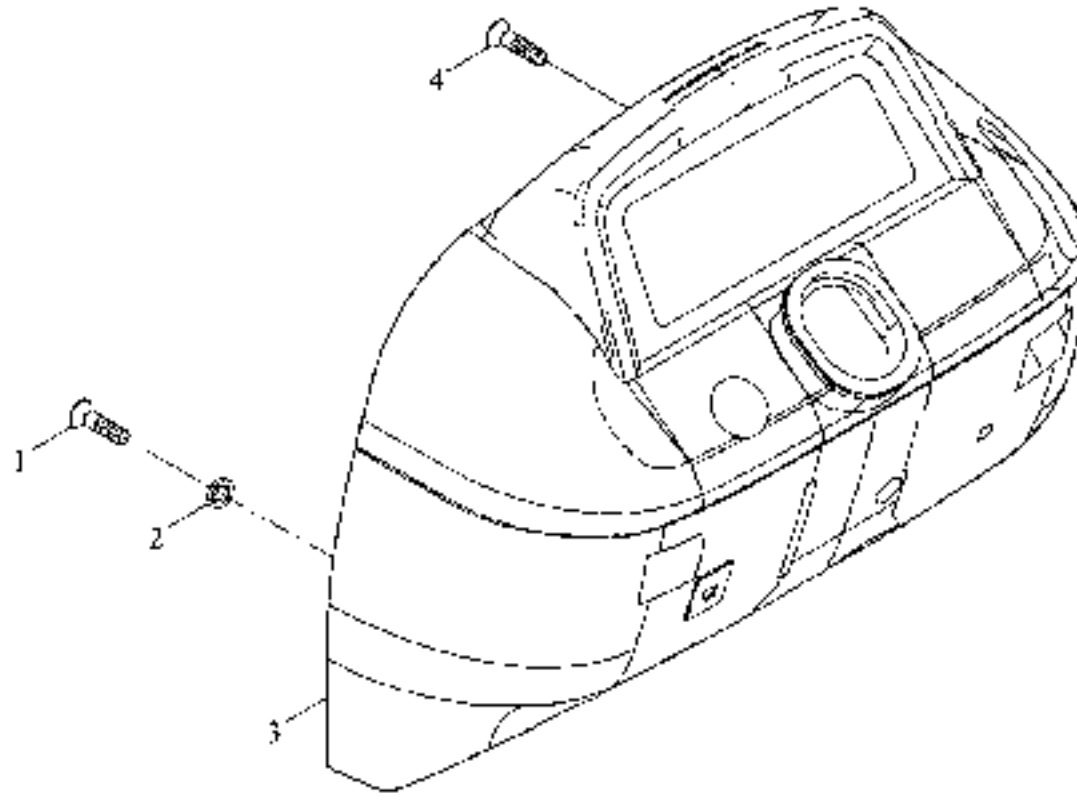

TE250.474C Instrument panel assembly (001)

No.	Part code and specification	Part name	Quantity	Remark
	TE250.474C	Instrument table assembly kit (001)	1	
1	GBT819.1-M5X50-4.8-A1L	Cross-sunk flat head screw with cross recess	6	
2	GB93-5-A0P	Normal type single coil spring lock washer	6	
3	TE250.474C.1	Dashboard	1	
4	GBT819.1-M5X10-4.8-A2L	Cross-sunk flat head screw with cross recess	1	

TE250.476D Hood air spring mounting assembly (003)

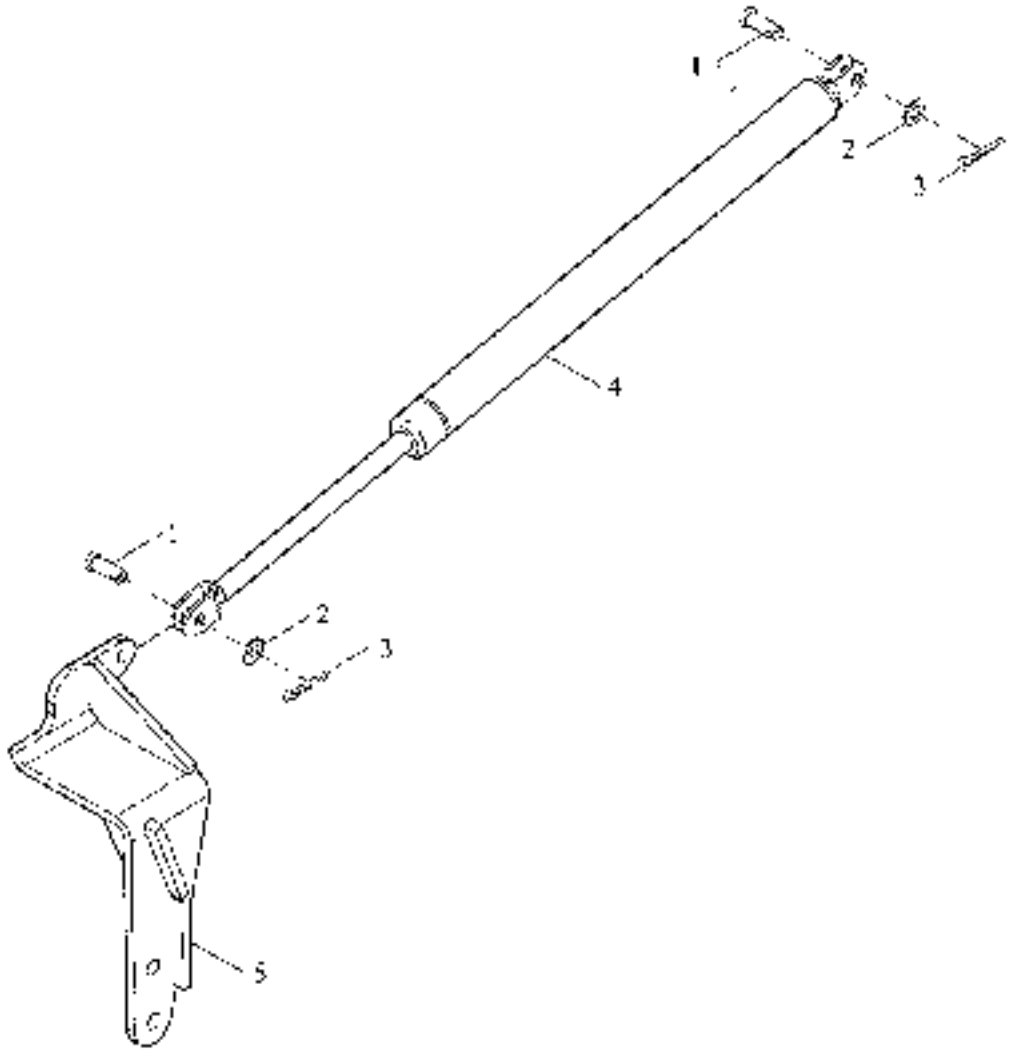

TE250.476D Hood air spring mounting assembly (003)

No	Part code and specification	Part name	Quantity	Remark
	TE250.476D	Hood gas spring mounting assembly (003)	1	
1	GBT882-B8X27	Pin	2	
2	GBT93 8-40P	Plain washer	2	
3	GBT91 3.2X16-A02	Cotter pin	2	
4	TE250.476D-01	Hood gas spring	1	
5	TE254.471.6	Gas spring holder welding	1	

TE250.477 Hood lock assembly (005)

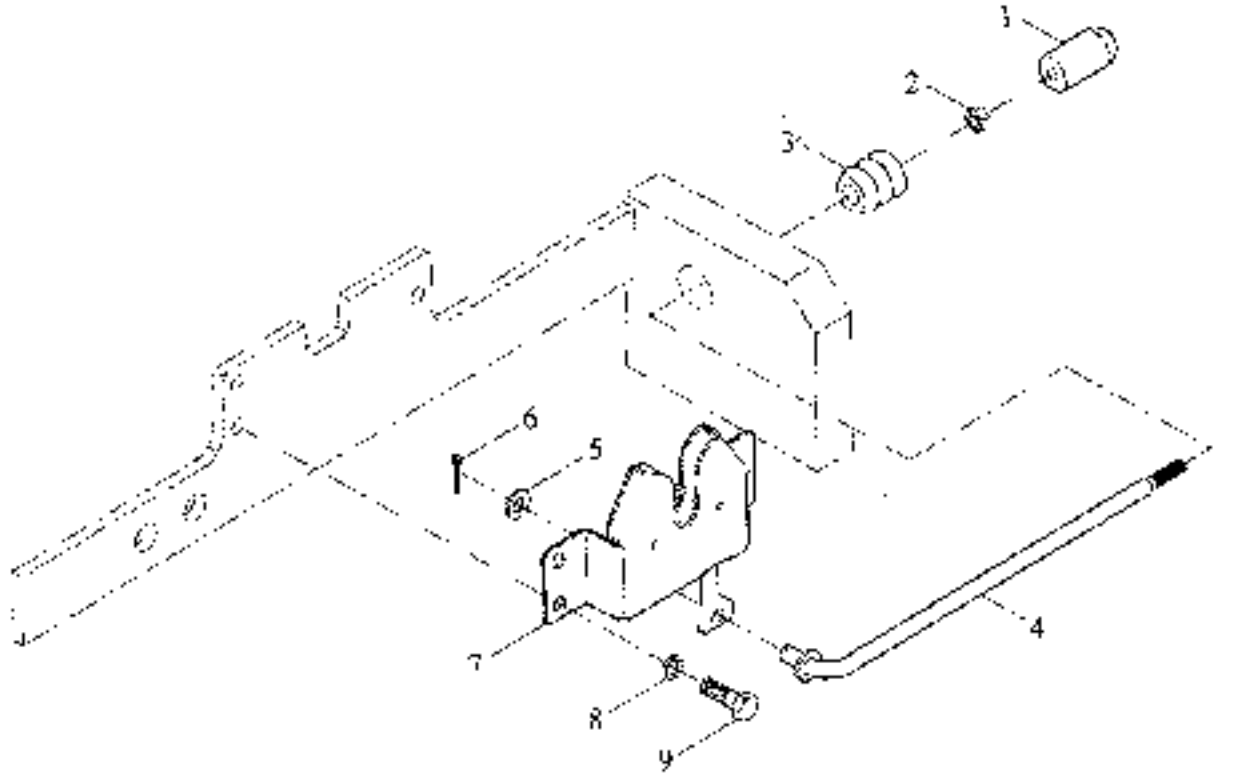

TE250.477 Hood lock assembly (005)

No.	Part code and specification	Part name	Quantity	Remark
	TE250.477	Hood lock assembly	1	
1	TE250.477.3	Handle assembly	1	
2	GBT6170-M5-8 A2L	Type I hexagon nut	1	
3	TE250.477-01	Aprons	1	
4	TE250.477.2	Rod welding	1	
5	GBT97.1-6-A0P	Plain washer	1	
6	GBT91 2X16 A0P	Cotter pin	1	
7	TE250.477.1	Hood lock	1	
8	GBT93-5-A0P	Normal type single coil spring lock washers	3	
9	GB15783 M5X10-8.8-A2L	Hex bolt	3	

TL01481190000K Engine wiring harness assembly (003)

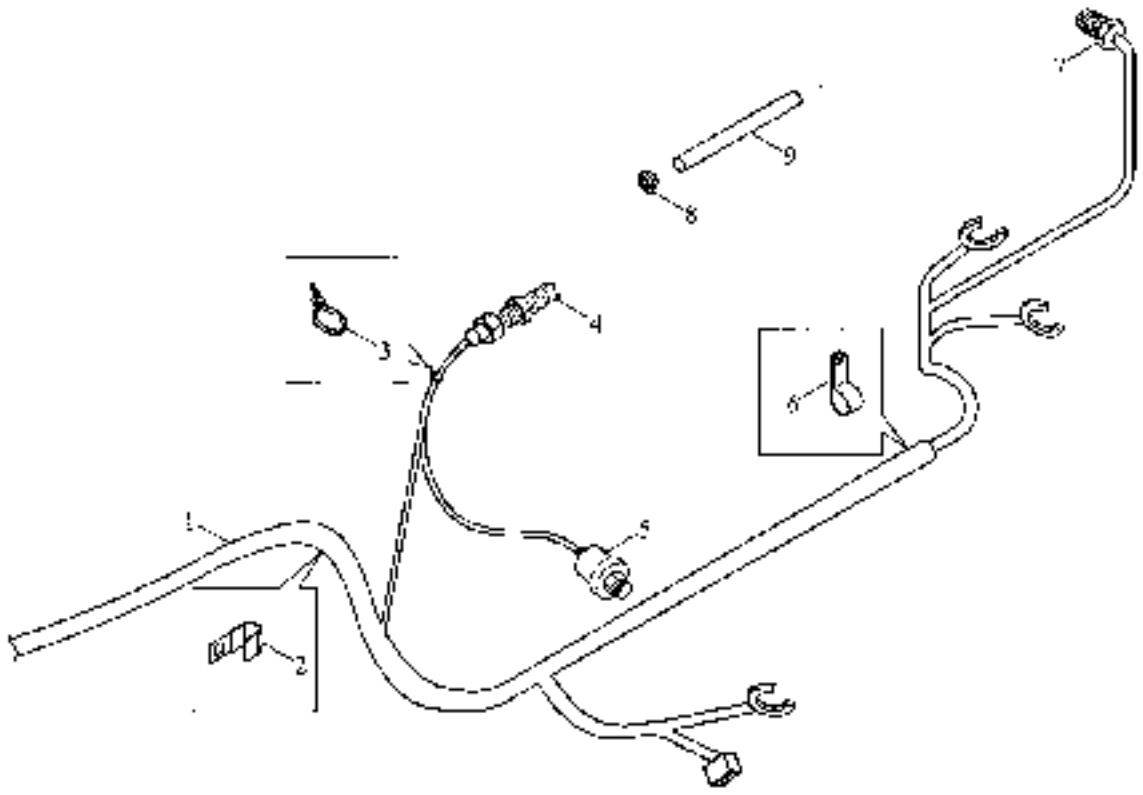

TL01481190000K Engine wiring harness assembly (003)

No.	Part code and specification	Part name	Quantity	Remark
	TL01481190000K	Engine harness mounting assembly	1	
1	TL01481190002K	Engine harness assembly	1	
2	FT304.48L.203	Harness fastening clip	2	
3	Q67405100	Intermediate shaft	1	
4	TS10481010002	Speed sensor	1	
5	FT300.48.073a	Oil pressure alarm	1	
6	FT300.48.202	Fastening clip	2	
7	TL02481050006	Water temperature sensor assembly	1	
8	FT800.48L.107	Nursing wire sets	2	
9	FT400.48.201	Casing	2	

TL01482320000K Body harness assembly

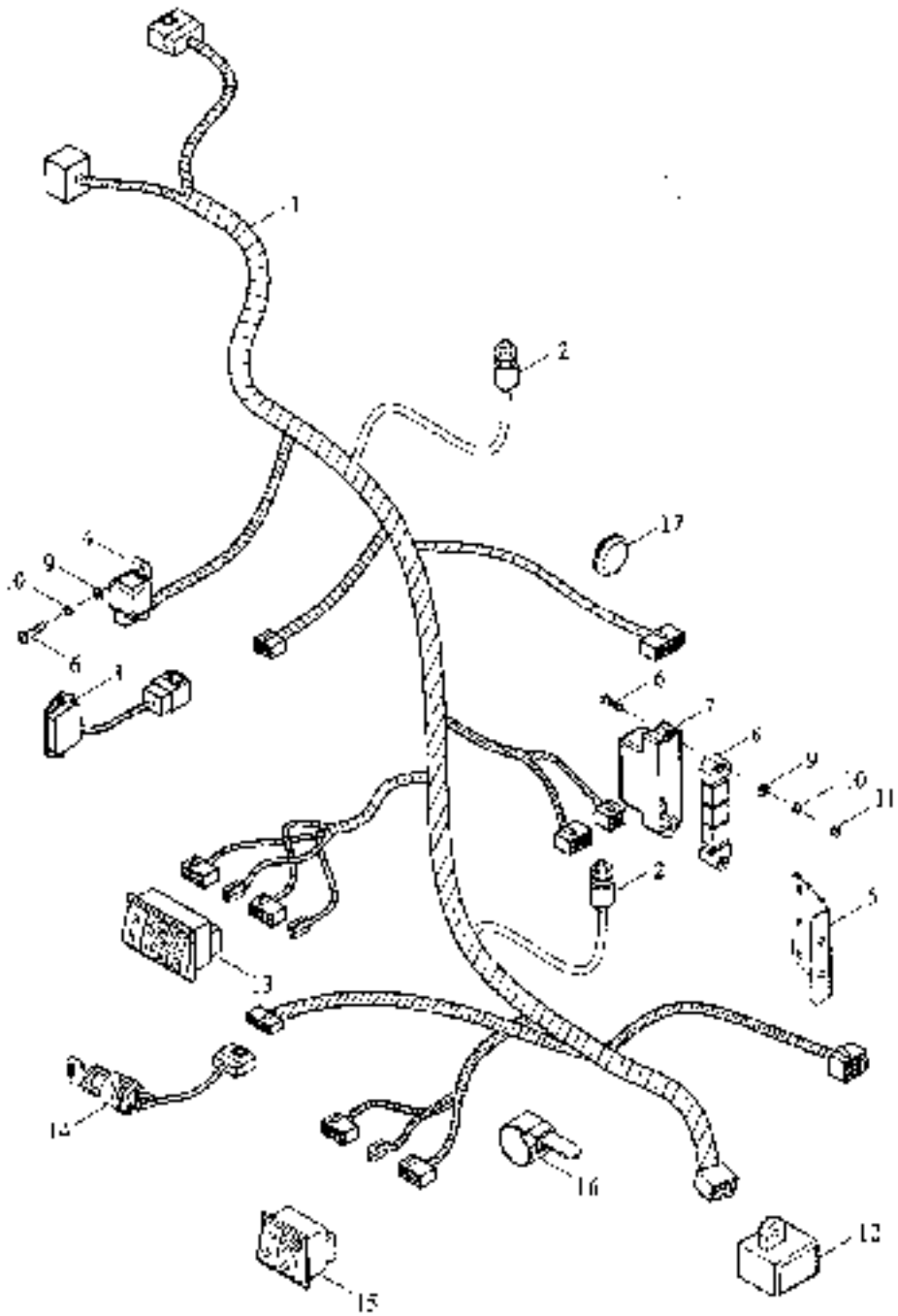

TL01482320000K Body harness assembly

No.	Part code and specification	Part name	Quantity	Remark
	TL01482320000K	Body harness installation	1	
1	TL01482320001K	Body harness assembly	1	
2	TB550.484.2	Brake light switch	2	
3	TL01482150004K	Voltage regulator	1	
4	FT300.48.055	Start relay	1	
5	TC250.482Y-01	Relay bracket	1	
6	GB/T818-M6X20-4.8-A2J	Cross recessed pan head screw	10	
7	TC250.482A-02	Relay cover	1	
8	TL01482150002K	Relay box assembly	1	
9	GB/T97.1-6-A0P	Plain washer	10	
10	GB/T93-6-A0P	Normal type single coil spring lock washers	10	
11	GB/T6.70-M6-8-A2L	Type 1 hexagon nut	8	
12	TL01482150003K	Safety box assembly	1	
13	TH354.482.5	Right rocker switch	1	
14	TB550.482.3	Ignition lock	1	
15	TH354.482.4	Left rocker switch	1	
16	3724D01-201	Can be loose cable ties	8	
17	FT800A.48L.101	Threaded Apron (J)	3	

TL01483020000K Headlight harness assembly (001)

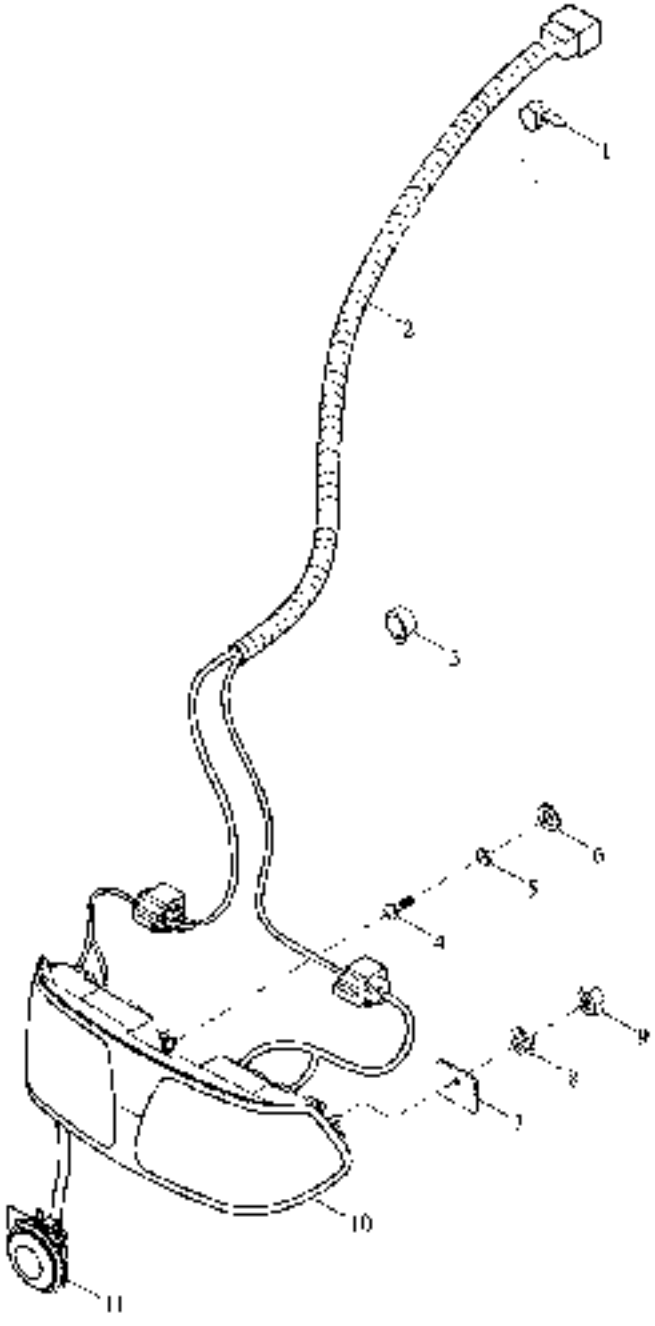

TL01483020000K Headlight harness assembly (001)

No.	Part code and specification	Part name	Quantity	Remark
	TL01483020000K	Headlight harness installation assembly	1	
1	3724101-201	Can be loose cable ties	1	
2	TL01483020001K	Headlight harness assembly	1	
3	3703501509-1.	Tie	5	
4	GB/T818-M8X16-4.8-A2J.	Cross recessed countersunk head screws	2	
5	GB/T93-8-A0F	Normal type single coil spring lock washers	2	
6	GB/T97.1-8-A0F	Plain washer	2	
7	TE250.483-01	Plate	2	
8	GB/T93-6-A0F	Normal type single coil spring lock washers	2	
9	GB/T6170-M6-8-421.	Type 1 hexagon nut	2	
10	TE250.483.2	Backlight assembly	1	
11	FJ65.48.340	Speaker assembly	1	

TL01484240000K After installing wire harness assembly

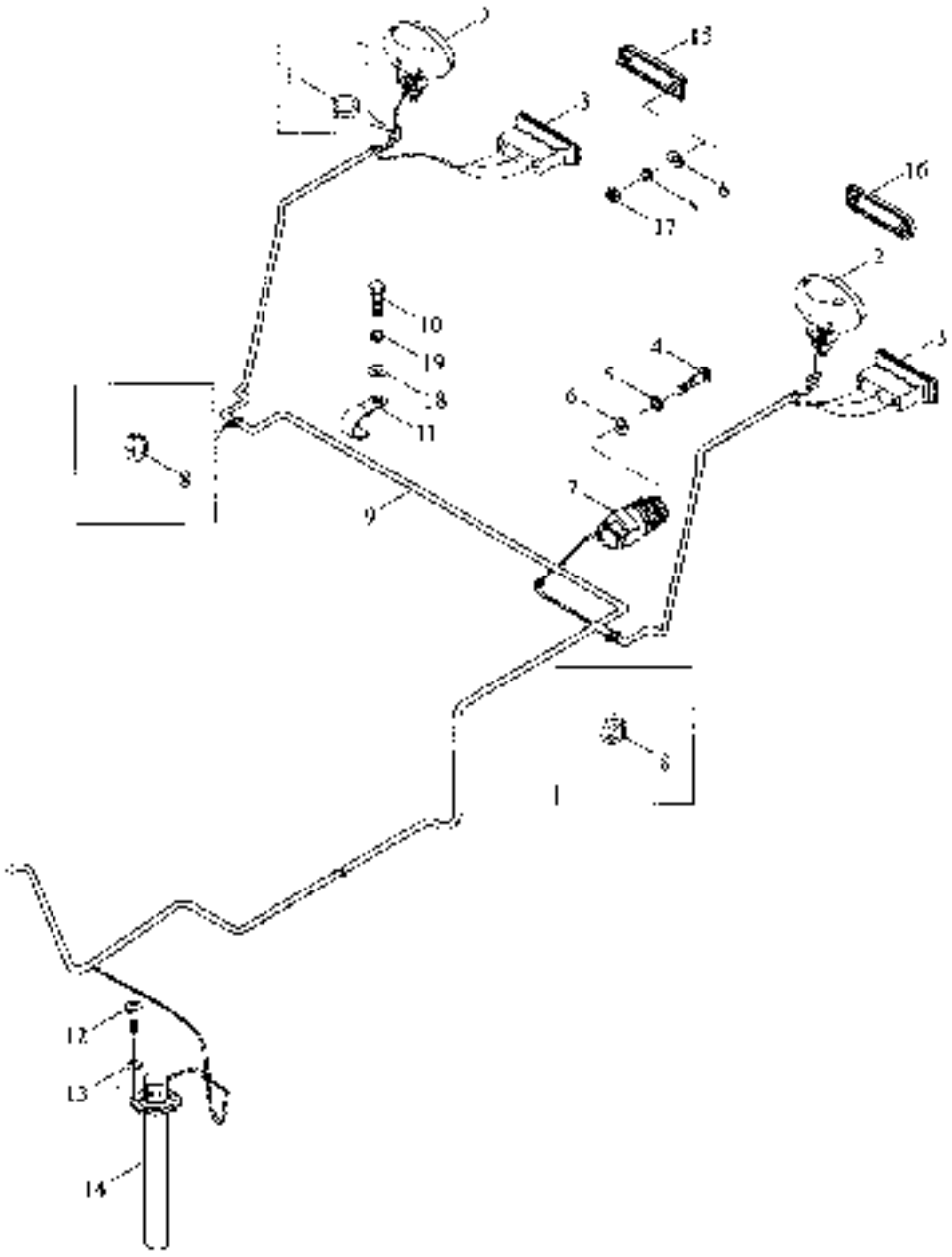

TL01484240000K After installing wire harness assembly

No.	Part code and specification	Part name	Quantity	Remark
	TL01484240000K	Rear beam harness installation	1	
1	JT65.484094	Threading spiral	2	
2	TC02.484020003	After work lights assembly	2	
3	TB550.484.0	Rear tail light assembly	2	
4	GBT818-M5X25-4.8-A2L	Cross recessed pan head screw	3	
5	GB/T93-5-A0P	Normal type single coil spring lock washers	4	
6	GBT97.1-5-A0P	Plain washer	4	
7	TD900.484.2	Rear trailer sensor	1	
8	JT800A.481.101	Threaded Aperture	2	
9	TL01484240001K	Rear light harness assembly	1	
10	GBT5783-M8X20-8.8-A2L	Hex bolt	2	
11	TF1204.481R-02	Harness fastening clip	2	
12	GBT818-M4X10-4.8-A2L	Cross recessed pan head screw	5	
13	GB/T93-4-A0P	Normal type single coil spring lock washers	5	
14	TL01484240002K	Oil sensor	1	
15	TB450.484E.5	Left reflector	1	
16	TB650.484E.6	Right reflector	1	
17	GBT6170-M5-8-A2L	Type 1 hexagon nut	4	
18	GBT97.1-8-A0P	Plain washer	2	
19	GB/T93-8-A0P	Normal type single coil spring lock washers	2	

TE300 485C Battery assembly (004)

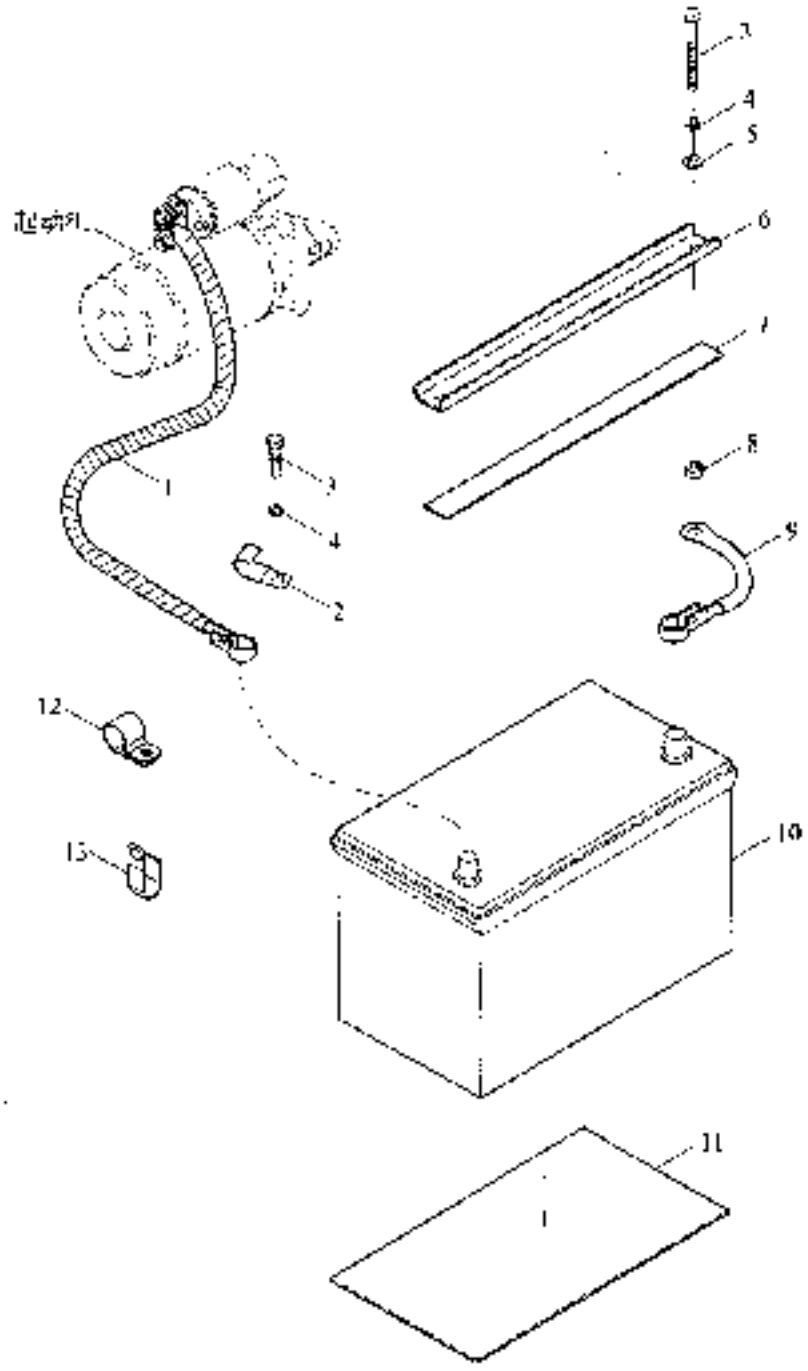

TE300.485C Battery assembly (004)

No.	Part code and specification	Part name	Quantity	Remark
	TE300.485C	Battery installation assembly(004)	1	
1	TE300.485.2	Battery positive cable assembly	1	
2	FT65.48.095	Harness Fastening Clamp (I)	1	
3	GB5783-M8X80-8.8 A2I	Hex bolt	2	
4	GBT93 8 A0P	Normal type single coil spring lock washers	2	
5	GBT97.1-8-A0P	Plain washer	2	
6	TE300.485A-01	Battery plate	1	
7	TE250.485A 02	Pressure pad	1	
8	GB6170-M8-8-A2L	Type 1 hexagon nut	1	
9	TE300.485.3	Battery negative cable assembly	1	
10	TE250.248.31.	Battery tank	1	
11	FT250.24B.103	Rubber skin	1	
12	FT800A.48I.106	Harness clip	1	
13	FT301.481.207	Harness fastening clip	1	

TE2S487030000K Combination instrument installation assembly(001)

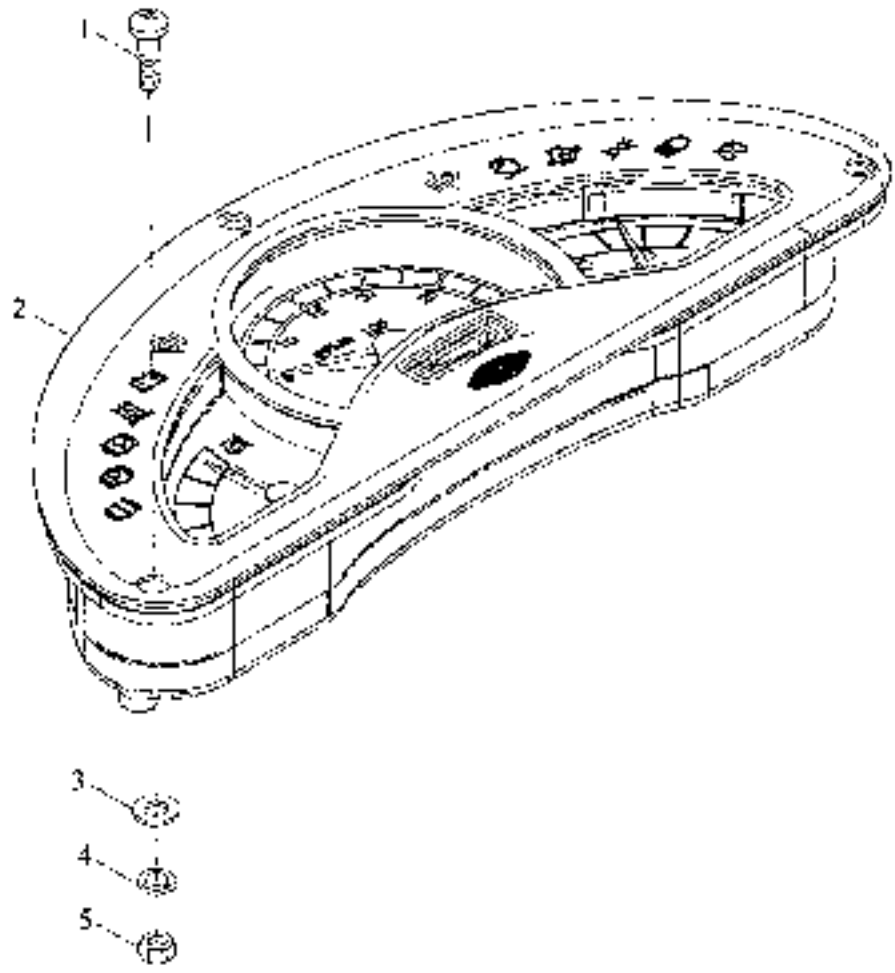

TE2S487030000K Combination instrument installation assembly(001)

No.	Part code and specification	Part name	Quantity	Remark
	TE2S487030000K	Combination instrument installation assembly	1	
1	GB/T818-M5X25-4.8-A2L	Cross recessed pan head screw	3	
2	TE01487040001K	Combination instrument assembly	1	
3	GB/T95-5 A0P	Plain washer	3	
4	GB/T93-5-A0P	Normal type single coil spring lock washer	3	
5	GB/T6170-M5-8-A2L	Type 1 Hexagon nut	3	

TL02500010000K Fuel tank assembly(002)

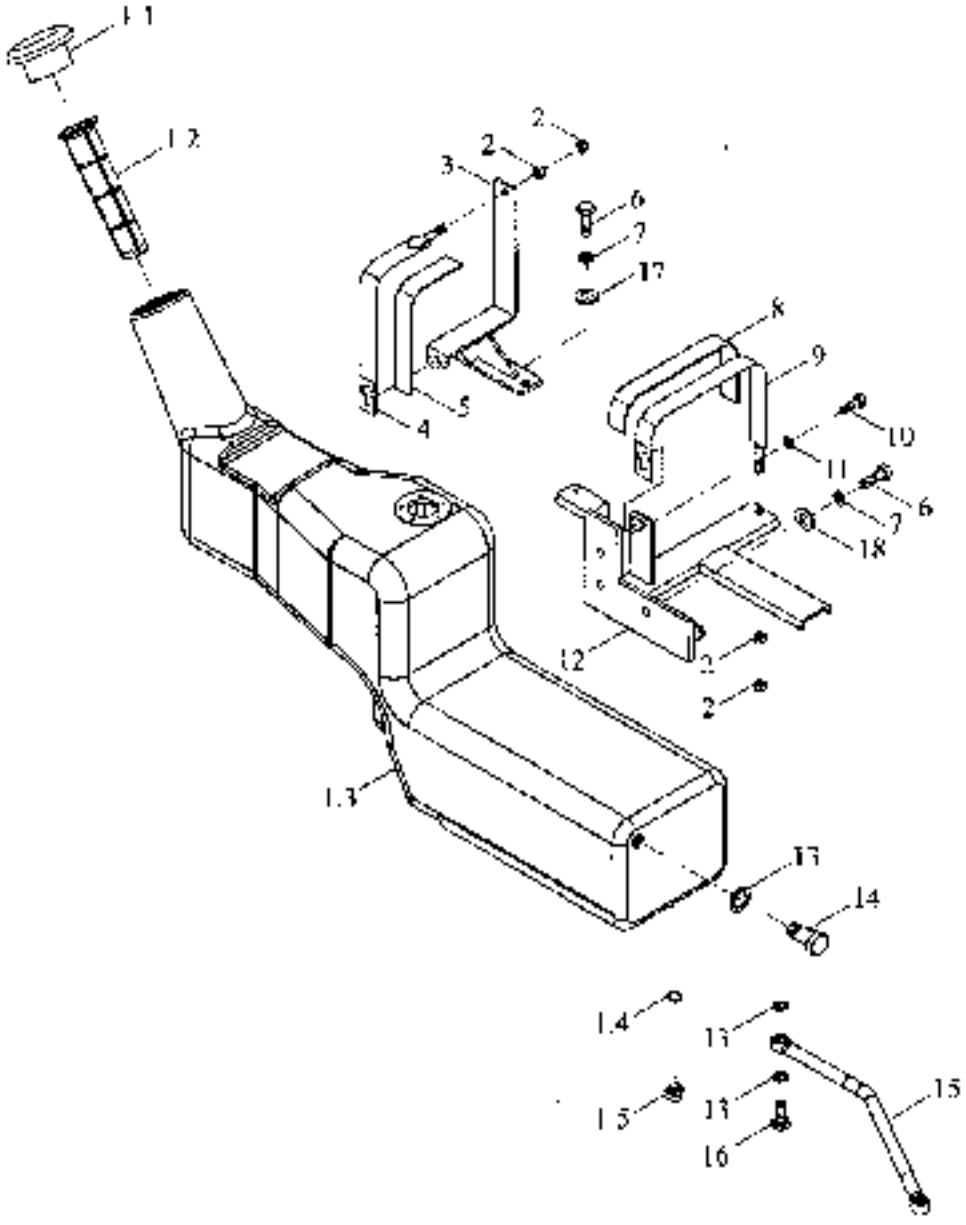

TL02500010000K Fuel tank assembly(002)

No.	Part code and specification	Part name	Quantity	Remark
	TL02500010000K	Tank assembly assembly	1	
1	TE254.50A.1	Tank assembly	1	
2	TD800.501A.1.1	Fuel tank cap	1	
3	TF1004.501.1 02	Filter	1	
4	TE254.50A.1-01	Oil tank shell	1	
5	JBT982 16	Combined sealing washer	1	
6	Q617B16	Hex head plug	1	
7	GBT6170-M10-6-A3L	Type 1 hexagon nut	4	
8	TE354.50.2	Tank rear bracket welding	1	
9	TE254.50A.4a	After the cable welding	1	
10	TL254.50A-01	Rubber pad	1	
11	GBT5783-M12X30-8.8-A3L	Hex bolt	4	
12	GB93-12-A3L	Normal type single coil spring lock washers	4	
13	TE254.50A-02	Rubber pad two	1	
14	TE254.50A.5a	Front cable welding	1	
15	GBT5783-M10X30-8.8-A3L	Hex bolt	1	
16	GB93-10-A3L	Normal type single coil spring lock washers	1	
17	TE354.50.3	Tank front bracket welding	1	
18	JBT982 14	Combined sealing washer	3	
19	GBT5786-M14X1.5X30-8.8-A3L	Hex bolt	1	
20	TE354.50.1	Tubing assembly	1	
21	FT65.50.106	Hollow bolts	1	
22	GBT97.1-17 A3L	Plain washer	2	

TE354.55 Lift assembly

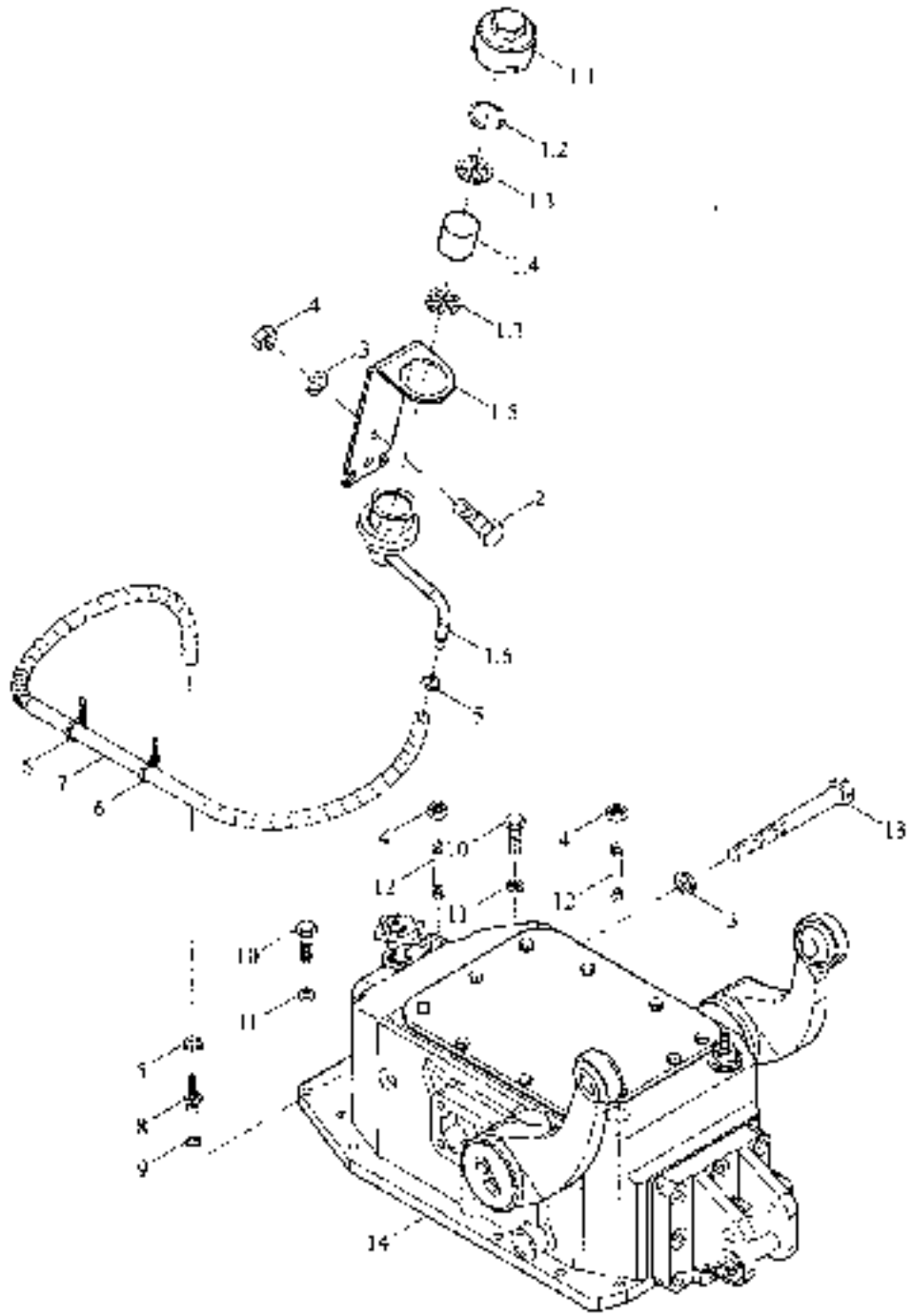

TE354.55 Lift assembly

No.	Part code and specification	Part name	Quantity	Remark
	TE354.55	Lift assembly	1	
1	FT300.55B.016e	Breather assembly	1	
1.1	FT700.55D.136	Breather cap	1	
1.2	GB/T 893.1 26	Circlip for hole	1	
1.3	FT650.40.167	Seal board	2	
1.4	FT700.55D.109	Respirator filter	1	
1.5	FT300.55B.164	Ventilator support	1	
1.6	FT300.55B.027A	Connecting pipe welding apparatus	1	
2	GB/T 5782-M10×20-8.8-A3L	Hex bolt	2	
3	GB/T 93-10-A0P	Normal type single coil spring lock washer	5	
4	GB/T 6170 M10 10 A3L	Type 1 hexagon nut	4	
5	Q67516	A-Type worm drive hose clamp	2	
6	Q67405100	Plastic holding band	2	
7	TE354.371-02	Breathing hose	1	
8	TE354.371-0	Respiratory connector	1	
9	JB/T 982-12	Gasket rubber seal gasket	1	
10	GB/T 5783 M10×30-10.9-A3L	Hex bolt	10	
11	TE250.55 03	Washer	12	
12	GB/T 899-M10×28-10.9-A3L	Double end stud	2	
13	GB/T 5782-M10×80 8.8-A2L	Hex bolt	3	
14	TE354.55.1	Lift assembly	1	

TE354.56 Suspension assembly-1 (012)

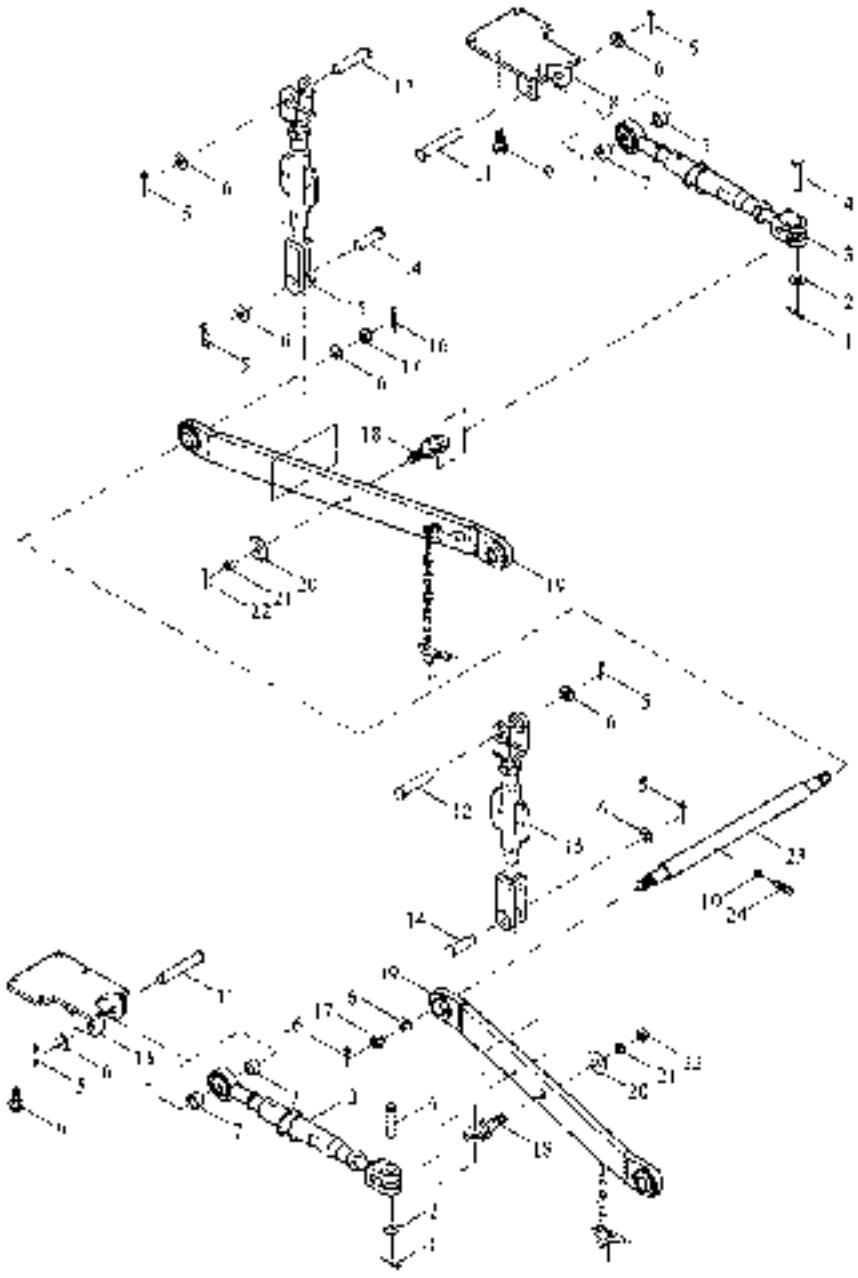

TE354.56 Suspension assembly–1 (012)

No.	Part code and specification	Part name	Quantity	Remark
	TE354.56	Suspension mechanism assembly (012)	1	
1	GB/T91–5X32–A0P	Cotter pin	2	
2	GB/T97.1–18–A0P	Plain washer	2	
3	TE300.56.3a	Limit bar assembly	2	
4	GB/T882–B18X55	Pin	2	
5	GB/T91–3.2X36–A0P	Cotter pin	6	
6	GB/T97.1–20–A0P	Plain washer	8	
7	FT300.56A.103	Set	4	
8	TE300.56.4a	Right limit lever bracket welding	1	
9	GB/T16674.1–M14X30–10.9–A3L	Hexagonal flange bolts	8	
10	GB/T6172.1–M17–04–A3L	Hexagonal nuts	1	
11	TE300.56–07	Limit rod connection pin	2	
12	FT300.56.3.101	Lifting rod connection pin	2	
13	TE300.56.5a	Left limit bar bracket welding	1	
14	TE300.56–03	Lifting rod under connecting pin	2	
15	TE354.56.1	Lift rod assembly	2	
16	GB/T91–4X40–A0P	Cotter pin	2	
17	GB/T6178–M20–5	Type 1 hexagonal slotted nut	2	
18	TE300.56–11	Limiter post connection pin	2	
19	TE300.56.1	Lower rod assembly	2	
20	TE300.56–02	Round plate	2	
21	GB/T93–16–A0P	Normal type single coil spring lock washer	2	
22	GB/T6170–M16–8–A3L	Type 1 hexagon nut	2	
23	TE300.56–04	Lower rod fixed shaft	1	
24	FT250.56.125	Stop screw	1	

TE354.56 Suspension assembly-2 (012)

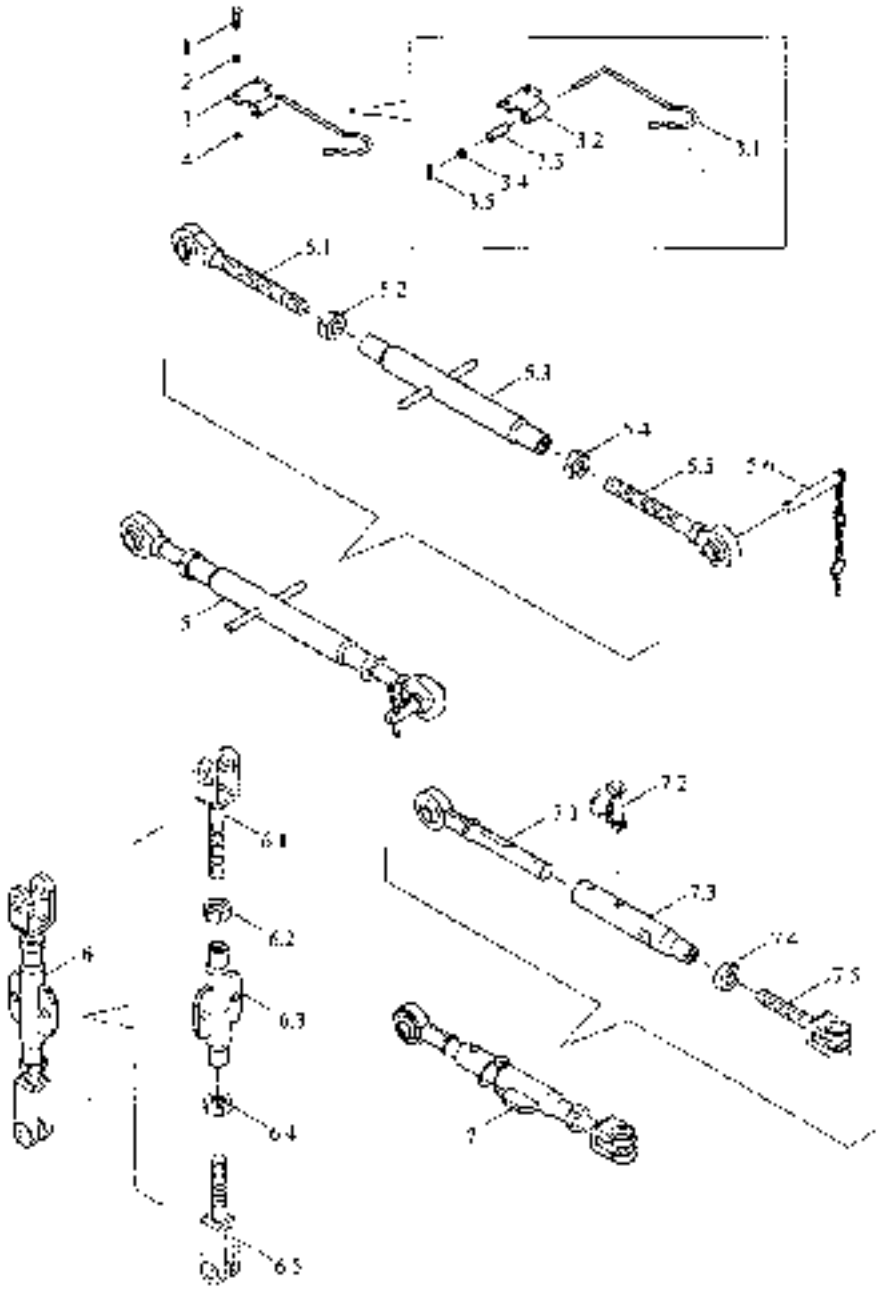

TE354.56 Suspension assembly-2 (012)

No.	Part code and specification	Part name	Quantity	Remark
	TE354.56	Suspension mechanism assembly (012)	1	
1	GB/T5782-M8X16-8.8-A2I	Hex bolt	1	
2	GB/T93-8-A0P	Normal type single coil spring lock washer	1	
3	TE300.56.6	Upper lever fixed card combination	1	
3.1	TE300.56.6-02	Upper lever fixing card	1	
3.2	TE300.56.6-01	Fixed seat	1	
3.3	TE300.56.6-03	Nylon bushings	1	
3.4	GB/T96.1-6-A0P	Big washer	1	
3.5	GB/T91-2X14-A0P	Cotter pin	1	
4	GB/T6170-M8-8-A2L	Type 1 hexagon nut	1	
5	FT250.56.012a	Upper rod assembly	1	
5.1	FT250.56.017	Upper lever adjustment lever assembly	1	
5.2	GB/T6171-M22X1.5-8-A2L	Type 1 hexagon nut	1	
5.3	FT250.56.031	Adjust the solenoid	1	
5.4	GB/T6171-M22X1.5-LH-8-A2L	Type 1 hexagon nut	1	
5.5	FT250.56.019	Adjust the upper rod adjustment lever assembly	1	
5.6	FT300.56A.113	Lock chain assembly	1	
6	TE354.56.1	Lifting rod assembly	2	
6.1	TE354.56.1-01	Lifting fork on the fork	1	
6.2	TE300.56.2-03	Trapezoidal nut Tr22X2	1	
6.3	TE300.56.2-1a	Raise the welding of the pipe	1	
6.4	TE300.56.2-04	Left trapezoidal nut Tr22X2	1	
6.5	TE300.56.2-01a	Lift the fork under the fork	1	
7	TE300.56.3a	Limit bar assembly	2	
7.1	TE300.56.3a-02	Limit lever adjustment screw	1	
7.2	TE300.56.3a-01	Telescopic cylinder	1	
7.3	TE300.56.3a.1	Telescopic rod head assembly	1	
7.4	GB/T6170-M22-8-A9L	Type 1 hexagon nut	1	
7.5	FT300.56A.023	Limit lever lock combination	1	

TE354.57 Distributor and operating mechanism assembly-1 (003)

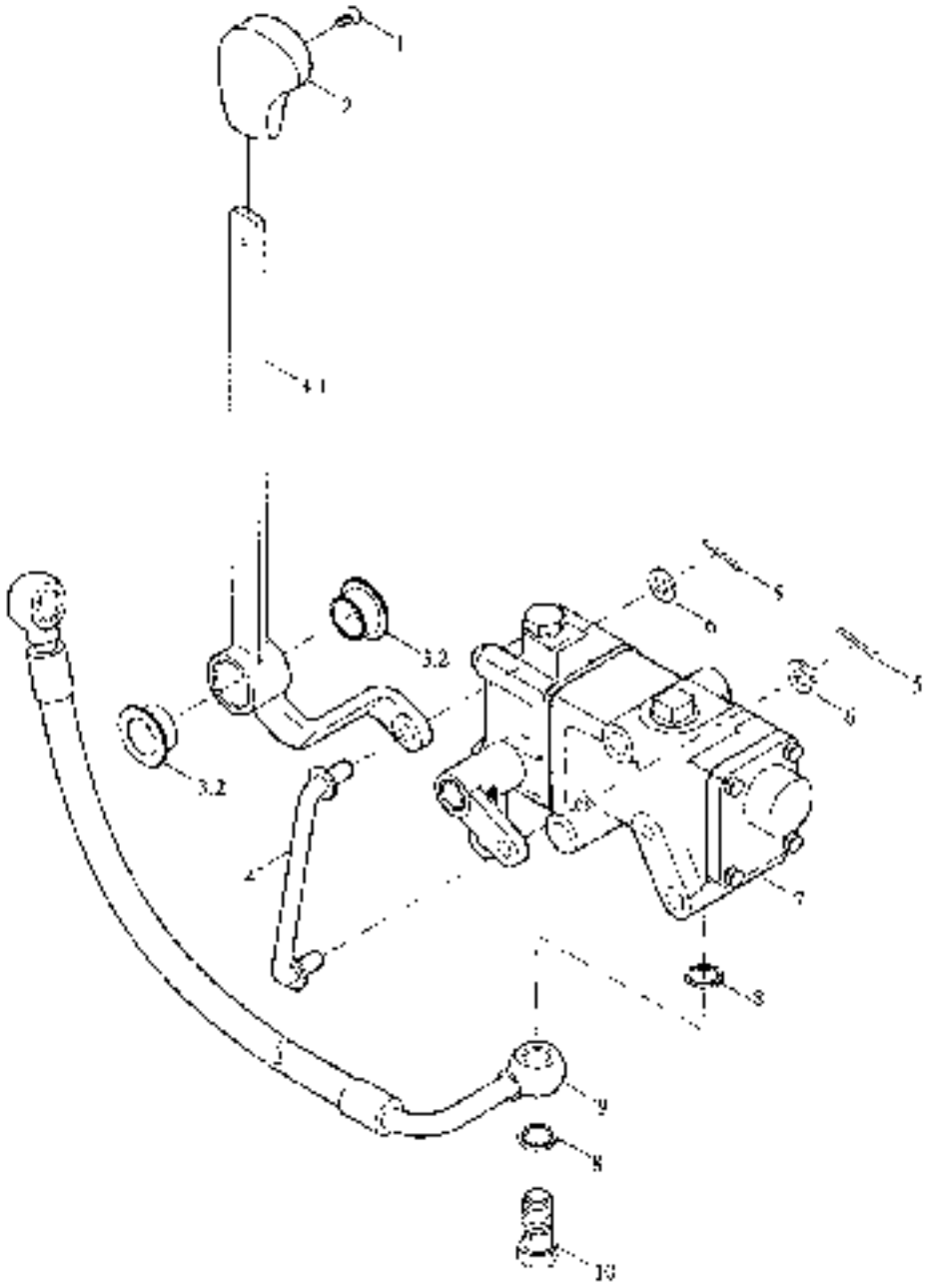

TE354.57 Distributor and operating mechanism assembly-1 (003)

No.	Part code and specification	Part name	Quantity	Remark
	TE354.57	Dispenser and Actuator Assembly (003)	1	
1	GB/T98-M4X10-4.8-A2L	Type 1 hexagon nut	1	
2	TB504.552 01	Handle head	1	
2	TE354.57 1	Control arm assembly	1	
3.1	TE354.57 1.1	Arm joint	1	
3.2	TE250 57.2-01	Nylon bushings	2	
4	JF250 57 3	Rod welding	1	
5	GB/T91 2X18-A0P	Cotter pin	2	
6	GB/T97.1-8-A0P	Plain washer	2	
7	TE250.57.1	Distributor assembly	1	
8	JB/T982-18	Combined sealing washer	2	
9	TE354 57 2	Distribution into the tubing assembly	1	
10	JT654.58 112	Hollow Bolt 3	1	

TE354.57 Distributor and operating mechanism assembly-2 (003)

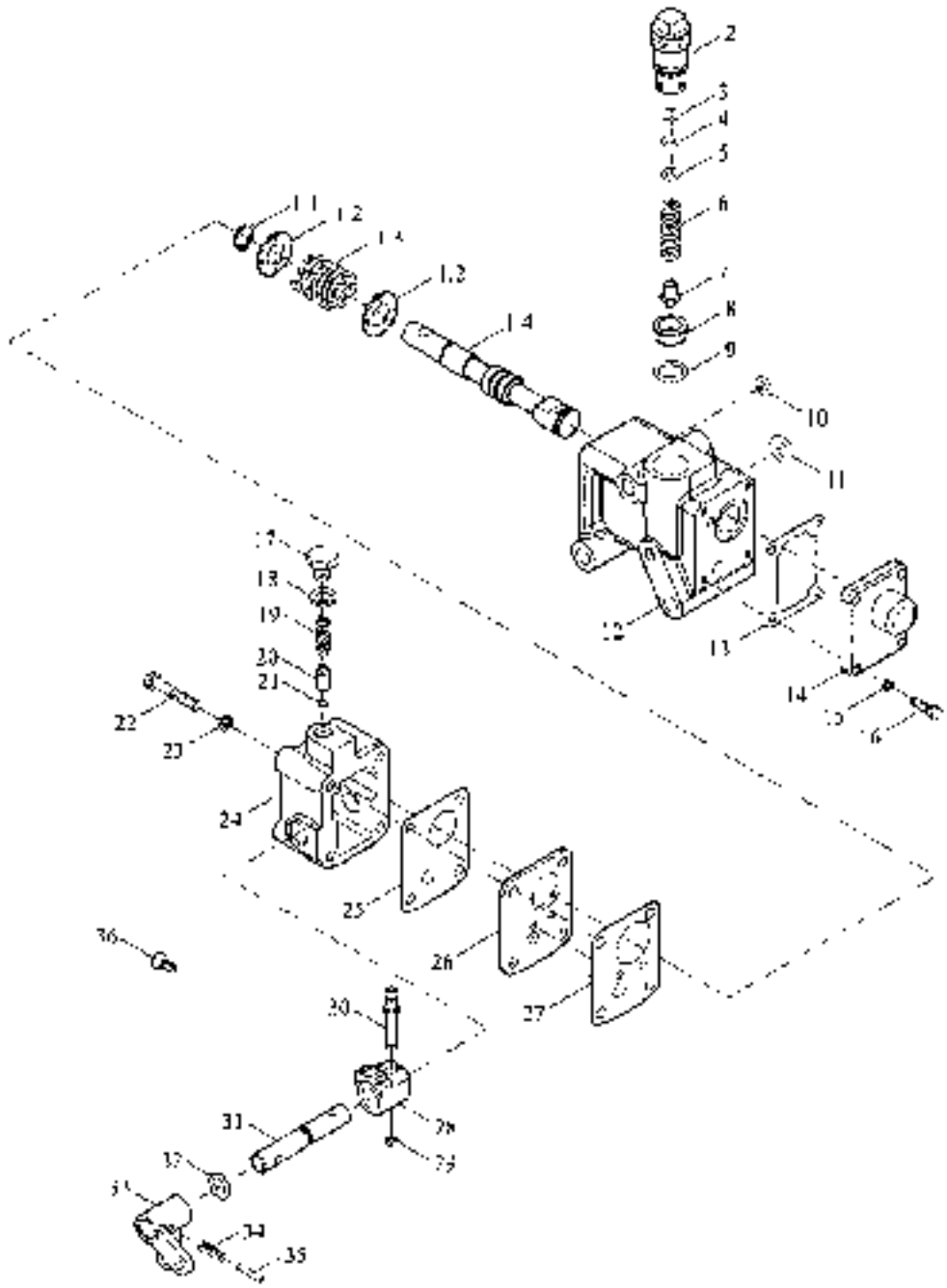

TE354.57 Distributor and operating mechanism assembly-2 (003)

No.	Part code and specification	Part name	Quantity	Remark
	TE354.57	Dispenser and Actuator Assembly (003)	1	
	TE250.57.1	Distributor assembly	1	
1	PT250.57.010	Slide valve assembly	1	
1.1	GBT894.1-15	Circlip for shaft	1	
1.2	PT250.57.115	Spring seat	2	
1.3	PT250.57.114	Slide valve return spring	1	
1.4	PT250.57.113	Slide valve	1	
2	PT250.57.128	Press the plug	1	
3	PT250.57.110	Adjusting washer	1	
4	PT250.57.111	Adjusting washer	1	
5	PT250.57.112	Adjusting washer	1	
6	PT250.57.129	Safety valve spring	1	
7	PT250.57.131	Safety valve seat	1	
8	PT250.57.301	Safety valve seat	1	
9	GBT3452.1 15.0X2.65G	Pneumatic O - ring rubber seals	1	
10	GBT3452.1-13.2X2.65G	Pneumatic O - ring rubber seals	1	
11	GBT3452.1-19.0X2.65G	Pneumatic O - ring rubber seals	1	
12	PT250.57.104	Distributor housing	1	
13	PT250.57.103	Front cover pad	1	
14	PT250.57.102	The front cover	1	
15	GBT93-8-A0F	Normal type single coil spring lock washers	4	
16	GBT5781-M8X16-4.8-A2L	Hex bolt	4	
17	PT250.57.123	Plug	1	
18	PT250.57.124	Gasket	1	
19	PT250.57.122	Positioning spring	1	
20	PT250.57.121	Locate the spring seat	1	
21	GBT308-8-G1601-b	Steel ball	1	
22	GBT5780-M6X55-4.8-A2L	Hex bolt	4	
23	GBT93-6-A0F	Normal type single coil spring lock washers	4	
24	PT250.57.108	Back cover	1	
25	PT250.57.107	Back cover pad	1	
26	PT250.57.106	Baffle	1	
27	PT250.57.105	Baffle pad	1	
28	PT250.57.119	Positioning blocks	1	
29	GBT896-4	Open ring	1	
30	PT250.57.120	Bushing	1	
31	TE250.57.1-01	Handle shaft	1	
32	GBT3452.1 9.50X2.65A	Pneumatic O - ring rubber seals	1	
33	TE250.57.1-02	Manipulate the socket arm	1	
34	GBT879.1-6X22	Elastic cylindrical pin	1	
35	GBT879.1-4X22	Elastic cylindrical pin	1	
36	GBT68-M4X10-4.8-A2L	Slotted countersunk head screws	2	

TL0258101000OK Oil pump tubing oil filter assembly(001)

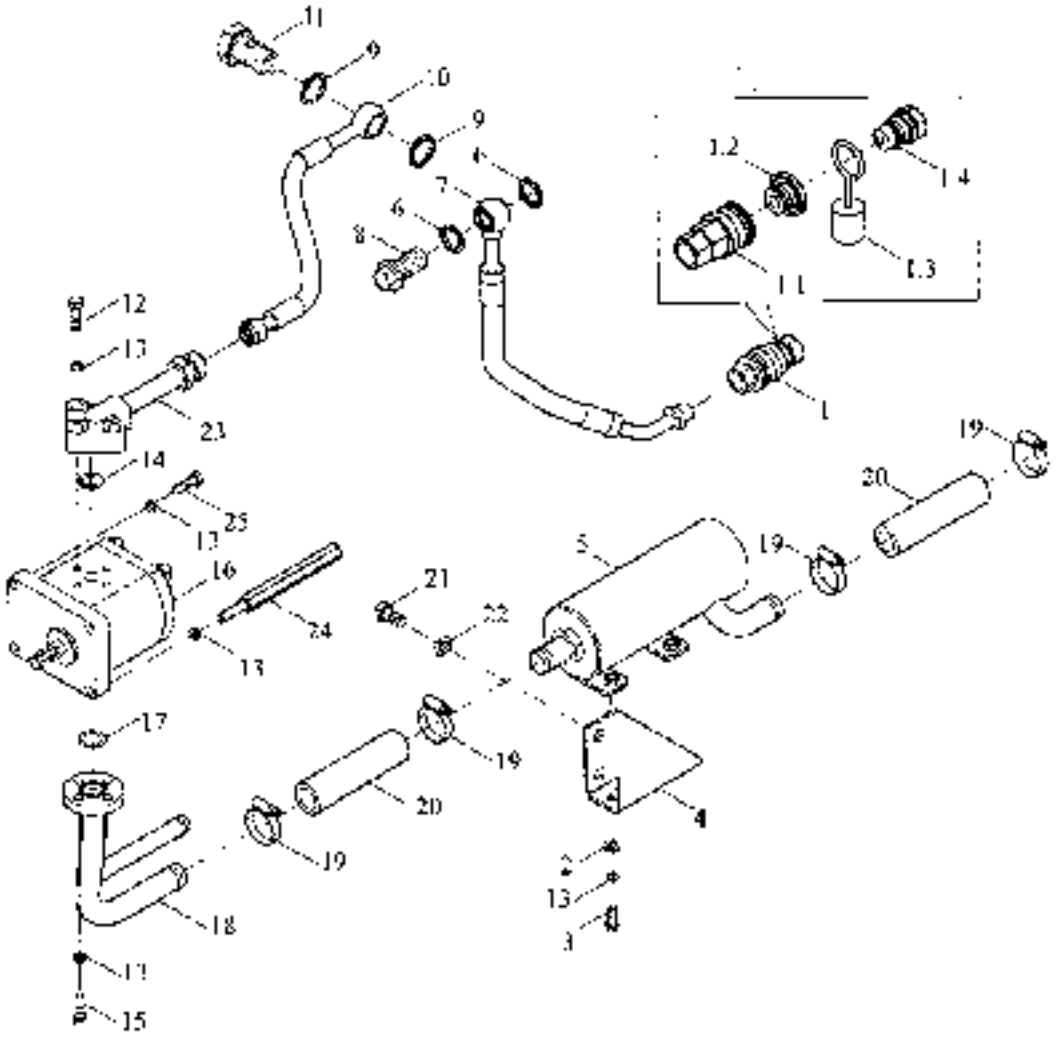

TL02581010000K Oil pump tubing oil filter assembly(001)

No.	Part code and specification	Part name	Quantity	Remark
	TL02581010000K	Oil pump tubing oil filter assembly	1	
1	FT354.58A.030	Quick change connector	1	
1.1	FT354.58A.031	Female connector	1	
1.2	FT354.58A.103	Dust cover	1	
1.3	FT354.58A.302	Male connector dust cover	1	
1.4	FT354.58A.092	Male connector	1	
2	GBT95 8 A0P	Plain washer	2	
3	GBT5783-M8X30-8.8 A2L	Hex bolt	2	
4	TE354.581-01	Oil filter fixing plate	1	
5	TE254.581H.3	Oil filter assembly	1	
6	JBT982-20	Combined sealing washer	2	
7	TE254.582H.10	Steady flow valve tubing welding	1	
8	FT254.40.102	Hollow bolts	1	
9	JBT982-24	Combined sealing washer	2	
10	TE354.581.4	Single valve into the oil hose	1	
11	FT254.58.132	Hollow Bolt M24X1.5	1	
12	GBT5783-M8X30-8.8-A2L	Hex bolt	3	
13	GBT93-8-A0P	Normal type single coil spring lock washers	13	
14	GBT3452.1 18.0X2.65G	Pneumatic O ring rubber seals	1	
15	GBT70.1 M8X25-8.8-A2L	Hexagon socket cap head screw	4	
16	TB504.581B.6	Gear pump	1	
17	GBT3452.1-21.2X1.80G	Pneumatic O - ring rubber seals	1	
18	TE354.581.1	Suction pipe welding	1	
19	Q67638	Type H worm drive hose hoop	4	
20	FT254.58.135	Hose	2	
21	GBT5783-M12X20 8.8 A2L	Hex bolt	2	
22	GBT93 12 A0P	Normal type single coil spring lock washers	2	
23	TE354.581.2a	Gear pump tubing welding	1	
24	TL02581EG0001	Bolt	2	
25	GBT70.1-M8X30 8.8 A2L	Hexagon socket cap head screw	2	

TE354.582 Multiway valve oil pipe assembly-1 (012)

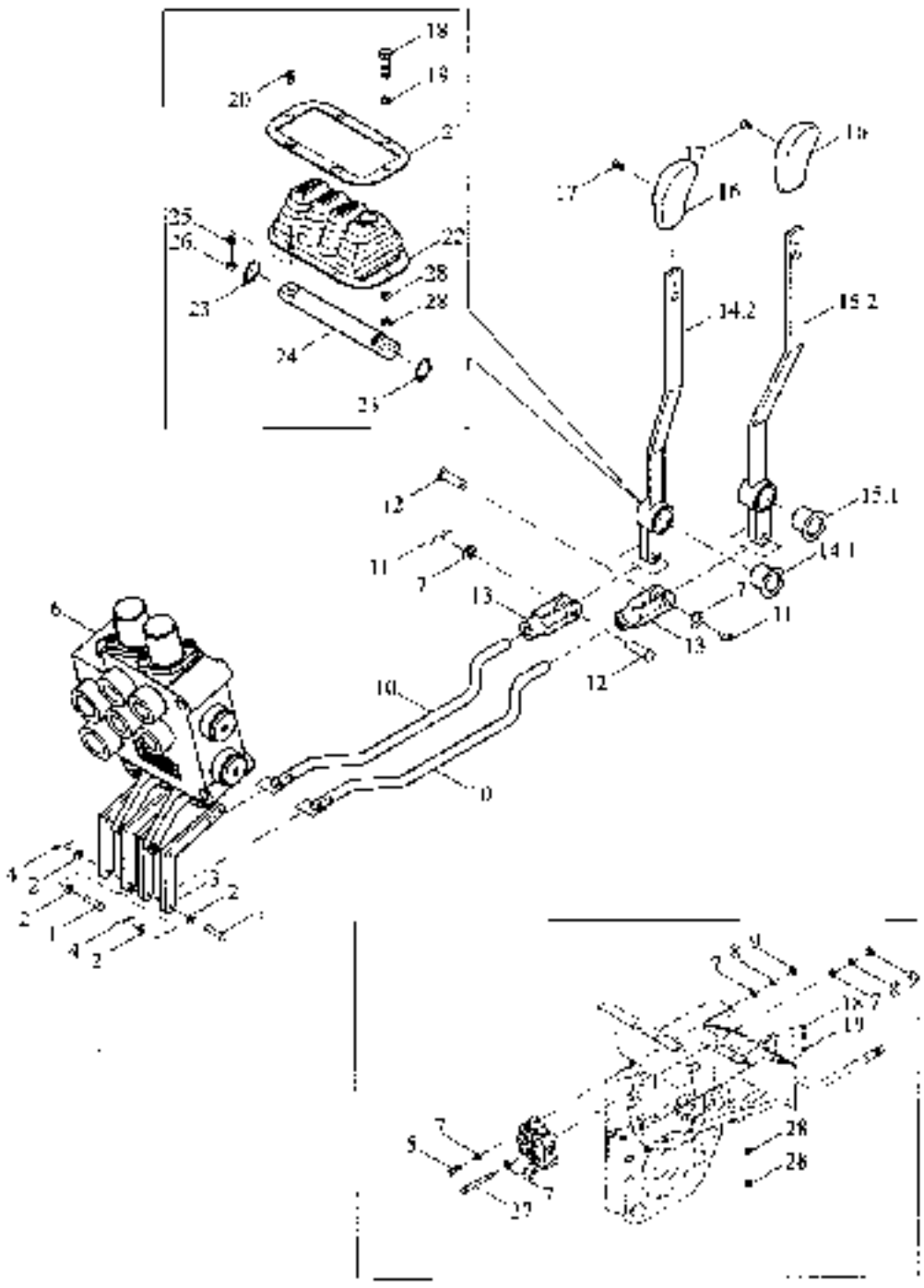

TE354.582 Multiway valve oil pipe assembly-1 (012)

No.	Part code and specification	Part name	Quantity	Remark
	TE354.582	Multi-way valve tubing assembly	1	
1	GBT882 B5X22	Pin	6	
2	GBT95-5-A0P	Plain washer	12	
3	TE354.582-01	Multi-way valve rocker arm	4	
4	GBT91 1.6X20-A0P	Cotter pin	6	
5	GBT5783-M8X30-8.8-A2L	Hex bolt	1	
6	TL01582020007K	Integral valve multi-way valve	1	
7	GBT95-8 A0P	Plain washer	8	
8	GBT93-8-A0P	Normal type single coil spring lock washer	3	
9	GBT6170-M8-8-A2F	Type 1 hexagon nut	3	
10	TE354.582-02	Fork	2	
11	GBT91-2.2X20-A0P	Cotter pin	2	
12	GBT882-B8X28	Pin	2	
13	TE354.582-05	Lever fork	2	
14	TE354.582.4	Manipulate the handle to press the H	1	
14.1	TE254.582H.11-01	Nylon sets	1	
14.2	TE354.582.4.1	Hand le handle welding	1	
15	TE354.582.2	Manipulate the handle to press the I	1	
15.1	TE254.5823.11-01	Nylon sets	1	
15.2	TE354.582.2.2	Multi-way valve control handle assembly	1	
16	TB504.562-04	Handle head	2	
17	GBT68-M4X10-4.8-A2L	Slotted countersunk head screws	2	
18	GBT5783-M6X35-8.8-A1I	Hex bolt	4	
19	GBT93-6 A0P	Normal type single coil spring lock washer	1	
20	GBT819.2 M5X20 8.8 A2L	Countersunk flat head screw with cross recess	4	
21	TE254.582H 10	Steel plate seal	1	
22	TE254.582H 09	Gland	1	
23	GBT894.1-18	Circlip for shaft	2	
24	TE254.582H-07	Shaft	1	
25	GBT93-5 A0P	Normal type single coil spring lock washer	4	
26	GBT6170 M5 8 A2L	Type 2 hexagon nut	4	
27	GBT5782 M8X65 8.8 A2L	Hex bolt	2	
28	GBT6170 M6 8 A2F	Type 2 hexagon nut	8	

TE354.582 Multiway valve oil pipe assembly-2 (012)

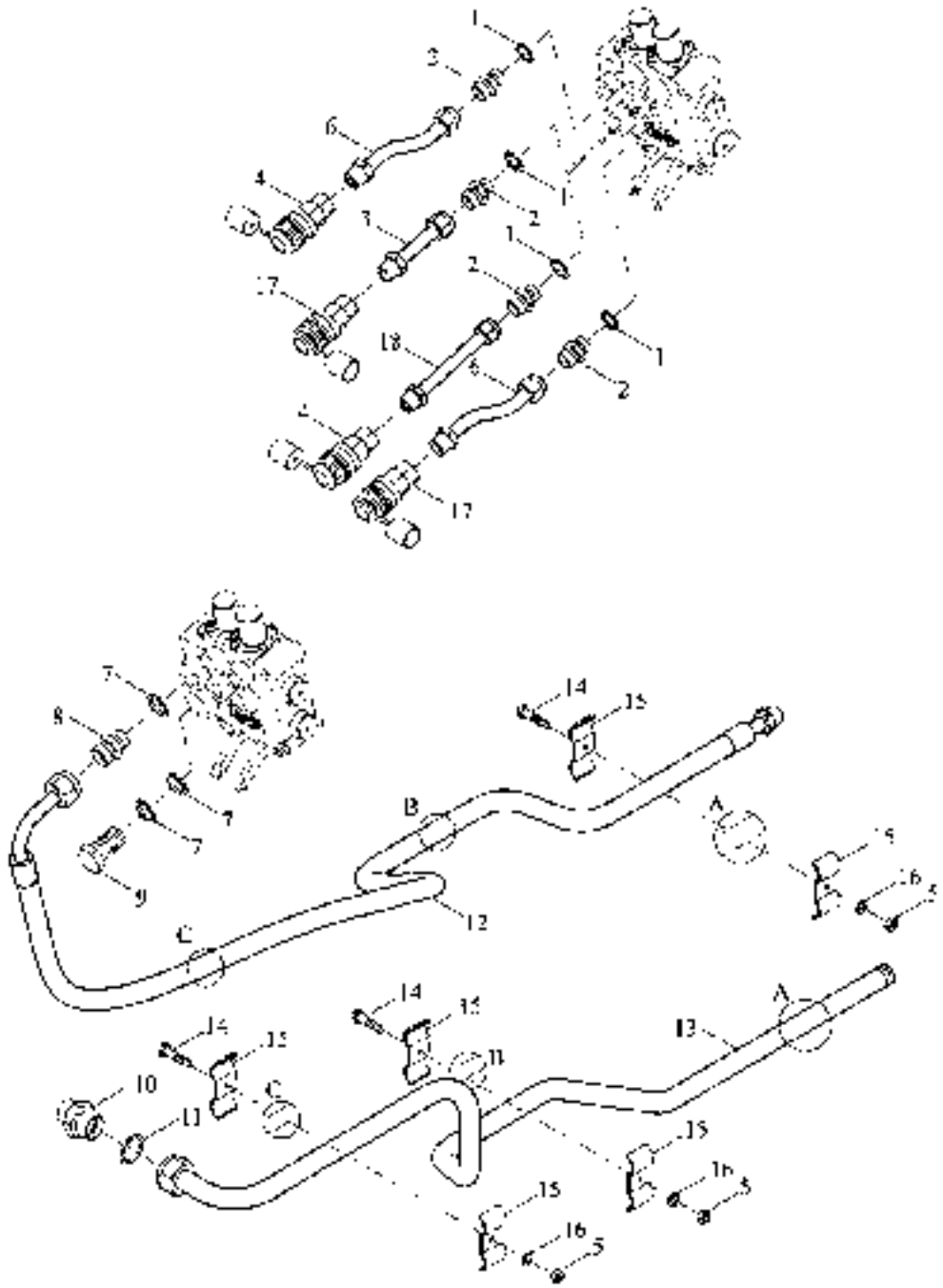

TE354.582 Multiway valve oil pipe assembly-2 (012)

No.	Part code and specification	Part name	Quantity	Remark
	TE354.582	Oil filter tubing assembly	1	
1	JB/T982 18	Compound seal gasket	4	
2	GB/T5733.2-G14	Cuffed end through connector body	4	
3	TE354.582.5	Transition pipe assembly	1	
4	FT354.58A.030	Quick change connector	2	
5	GB/T6170-M6-8-A2L	Type 1 hexagon nut	3	
6	TE354.582.6	Output tubing assembly	2	
7	JB/T982-22	Compound seal gasket	1	
8	FT054.58B.102	Cuffed end through connector body 1	1	
9	FT054.58.107	Hollow Bolt - 1	1	
10	TE354.582-04	Connector hole	1	
11	JB/T982-27	Compound seal gasket	1	
12	TE354.582.1	Multi - way valve inlet tubing assembly	1	
13	TE354.582.3	Suction pipe assembly	1	
14	GB/T5783-M6X30-8.8-A2L	Hex bolt	3	
15	TE354.582.7	Steel pipe clip combination	6	
16	GB/T93 -6 -A0P	Normal type single coil spring lock washer	6	
17	TC02580010000HK	Quick change connector	2	
18	TE354.582.10	Multi - way valve output tubing welding	1	

TE254.742 Front weight assembly (010)

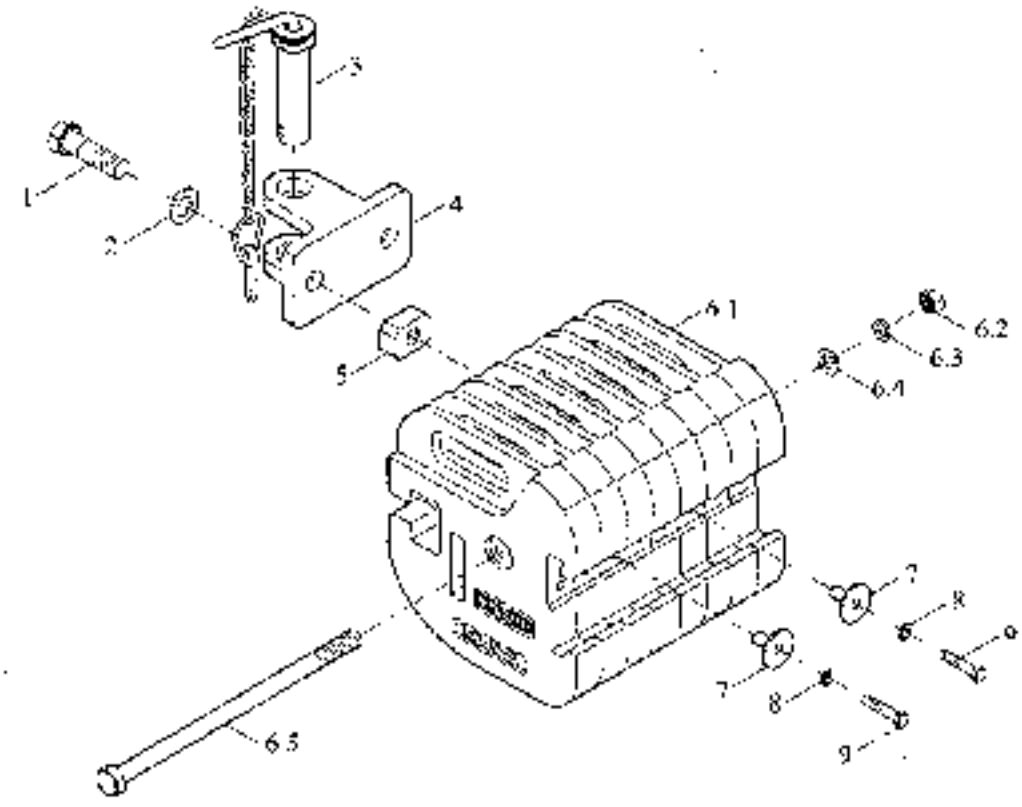

TE254.742 Front weight assembly (010)

No.	Part code and specification	Part name	Quantity	Remark
	TE254.742	Front counterweight assembly	1	
1	TE254.742-04	Traction bolts	2	
2	GB/T97.1-20-A0P	Plain washer	2	
3	TB400.748.2	Traction pin and bolt assembly	1	
4	TE254.747-02	Traction axle	1	
5	PT650.74.108	Traction nut	1	
6	TE254.742.2	Front with a small assembly	1	
6.1	TE254.742-01	Counterweight	8	
6.2	GB/T6170-M16-8-A3L	Type 1 hexagon nut	1	
6.3	GB/T93-16-A0P	Normal type single coil spring lock washer	8	
6.4	GB/T97.1-16-A0P	Plain washer	1	
6.5	TE254.742-03	Connecting bolts	1	
7	TE254.742.3	Plate welding	2	
8	GB/T93-10-A0P	Normal type single coil spring lock washer	2	
9	GB/T5783-M10X45-8.8-A3L	Hex bolt	2	

TE354.46A Safety rack assembly

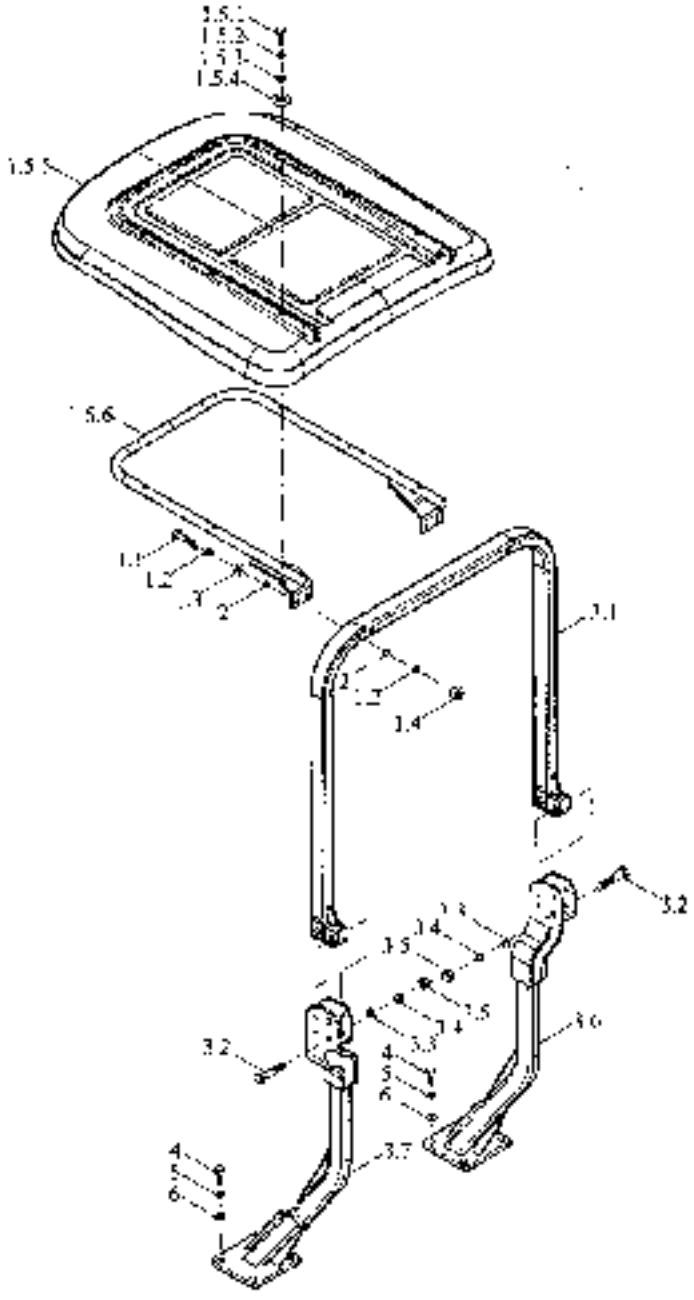

TE354.46A Safety rack assembly

No.	Part code and specification	Part name	Quantity	Remark
	TE354.46A	Safety rack assembly	1	
1	TE254.46.2	Awning assembly	1	
1.1	GB/T 5782-M12×90-8.8-A2L	Hex bolt	4	
1.2	GB/T 93-12-A0P	Normal type single coil spring lock washer	4	
1.3	GB/T 97.1-12-A0P	Plain washer	8	
1.4	GB/T 6170 M12 8 A3L	Type 1 hexagon nut	4	
1.5	TE254.46.2.1	Awning	1	
1.5.1	GB/T 5783 M6×25 8.8-A2L	Hex bolt	8	
1.5.2	GB/T 93-6-A0P	Normal type single coil spring lock washer	8	
1.5.3	GB/T 97.1-6-A0P	Plain washer	8	
1.5.4	TE254.46.2.1-02	Rubber gasket	8	
1.5.5	TE254.46.2.1.1	Awning steel	1	
1.5.6	TE354.46.2.1-01	Plastic awning	1	
2	TB400.46C-01	Blockages	8	
3	TE354.46A.1	Support beam mounting assembly	1	
3.1	TE354.46A.1.3	Upper support beam welding	1	
3.2	GB/T 5782-M16×80-10.9-A3L	Hex bolt	6	
3.3	GB/T 97.1-16-A0P	Plain washer	6	
3.4	GB/T 93-16-A0P	Normal type single coil spring lock washer	6	
3.5	GB/T 802-M16-6	Combination cover nuts	6	
3.6	TE354.46.1.2	Right support beam welding	1	
3.7	TE354.46.1.1	Left support beam welding	1	
4	GB/T 5783-M14×45-8.8-A3L	Hex bolt	8	
5	GB/T 93-14-A0P	Normal type single coil spring lock washer	8	
6	GB/T 97.1-14-A0P	Plain washer	8	

TA600.62A 3 inch seat belt assembly

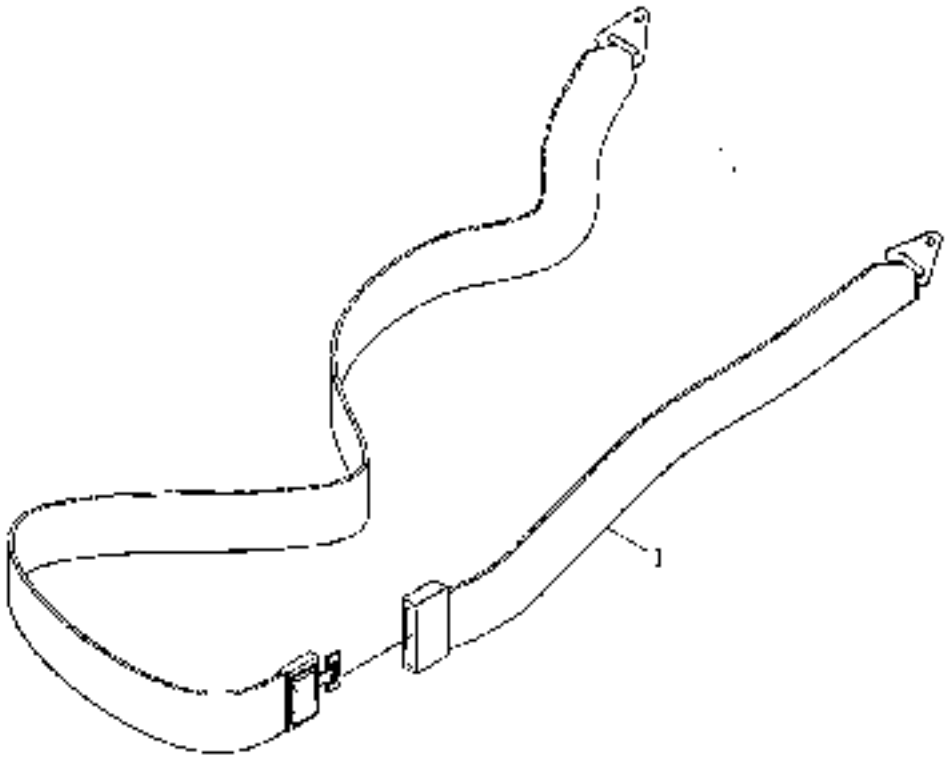

TA600.62A 3 inch seat belt assembly

No.	Part code and specification	Part name	Quantity	Remark
	TA600.62A	Seat belt assembly	1	
1	TA600.62A	Seat belt assembly	1	

TE354.202 Foot throttle assembly(006)

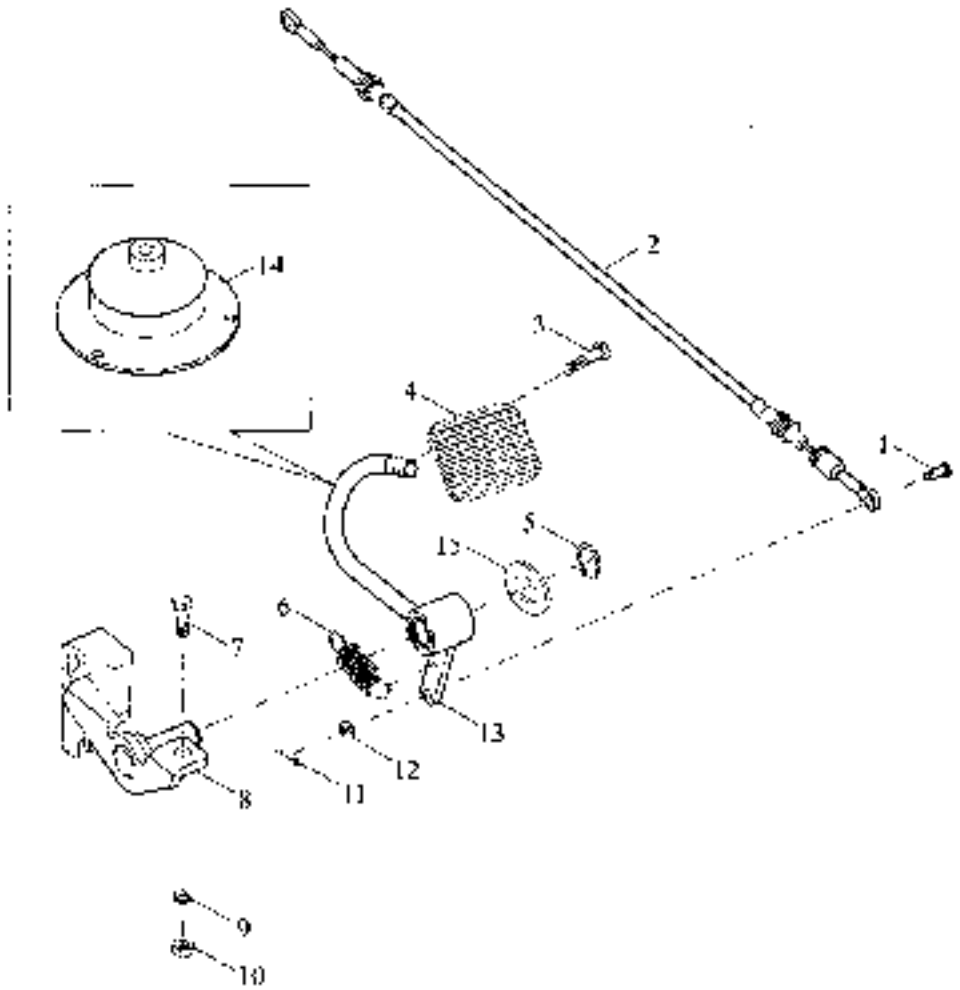

TE354.202 Foot throttle assembly(006)

No.	Part code and specification	Part name	Quantity	Remark
	TE354.202	Foot throttle assembly(006)	1	
1	GBT882 B6X16	Pin	1	
2	TE354.202-01	Foot throttle wire assembly	1	
3	GBT5783-M5X16-8.8-A2L	Hex bolt	1	
4	TE254.202A-01	Pedal	1	
5	GB1894.1-13	Circlip for shaft	1	
6	TE254.202A-03	Foot throttle return spring	1	
7	GBT5783-M8X20-8.8-A2L	Hex bolt	2	
8	TE254.202A.1	Fixed frame welding	1	
9	GBT93-8-A0P	Normal type single coil spring lock washer	2	
10	GBT6170 M8 8-A2L	Type 1 hexagon nut	2	
11	GBT91 2X12-A0P	Cotter pin	1	
12	GBT97.1 6 A0P	Plain washer	1	
13	TE254.202A.2	Rocker welding	1	
14	FT65.45.393	Throttle pedal gland	1	
15	GBT97.1-14-A0P	Plain washer	1	

TE204.32F Front drive wheel assembly

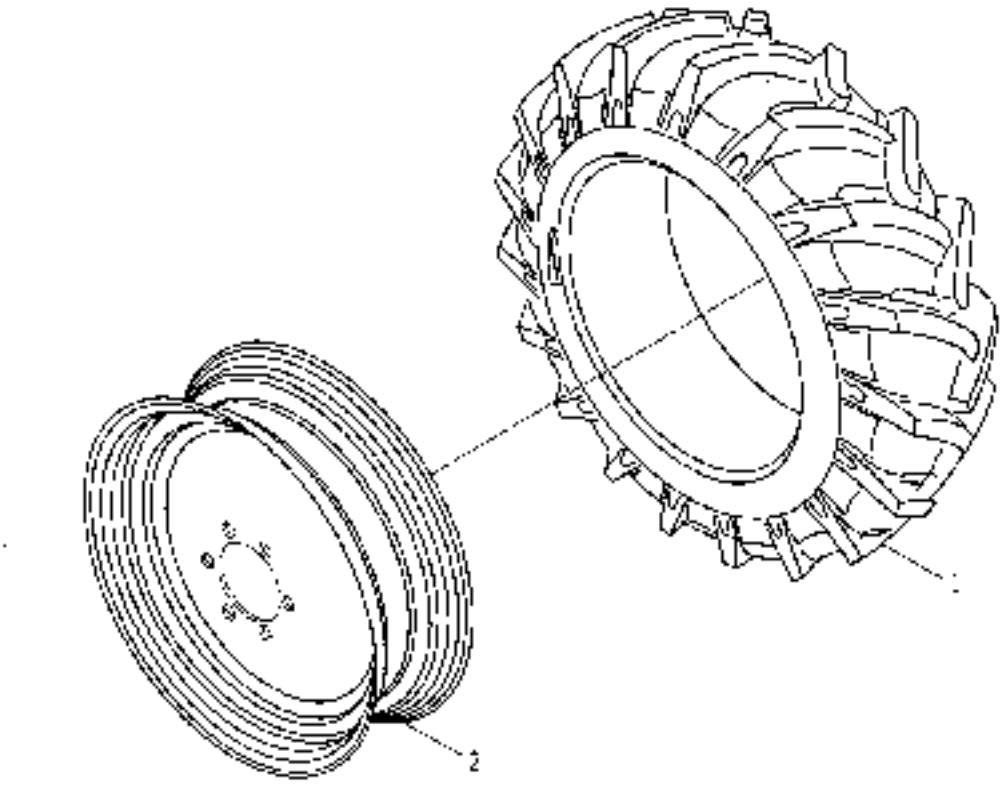

TE204.32F Front drive wheel assembly

No.	Part code and specification	Part name	Quantity	Remark
	TE204.32F	Front drive wheel assembly	2	
1	TE254.32A-01	Tire 28×9-15	1	
2	TE204.32F.1	Rim weldment	1	

TE254.34F Rear drive wheel assembly (13–20 gardening)

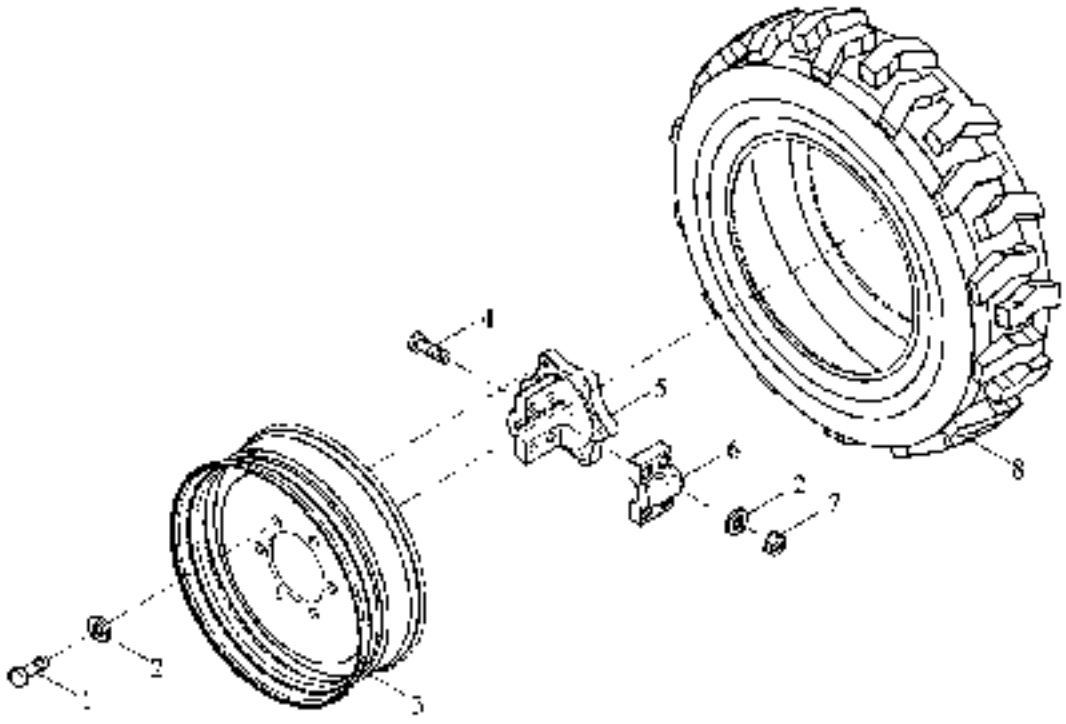

TE254.34F Rear drive wheel assembly (13-20 gardening)

No	Part code and specification	Part name	Quantity	Remark
	TE254.34F	Rear driving wheel assembly	1	
1	GB/T 5786-M14 x 1.5 x 35-10.9-ASL	Bolt	6	
2	PT250.34.108	Wheel hub washer	10	
3	TE254.34F.1	Wheel rim weld	1	
4	TE254.34B.2-01	Wheel hub bolt	4	
5	PT250.34.102	Drive wheel hub	1	
6	TT250.34.109	Drive wheel hub cover	1	
7	GB/T 6171-M14 x 1.5-10-ASL	Nut	4	
8	TE254.34C-01	L 2R Tire tube 15-19.5-8PR	1	

TE354.583 Simple hydraulic output assembly assembly(003)

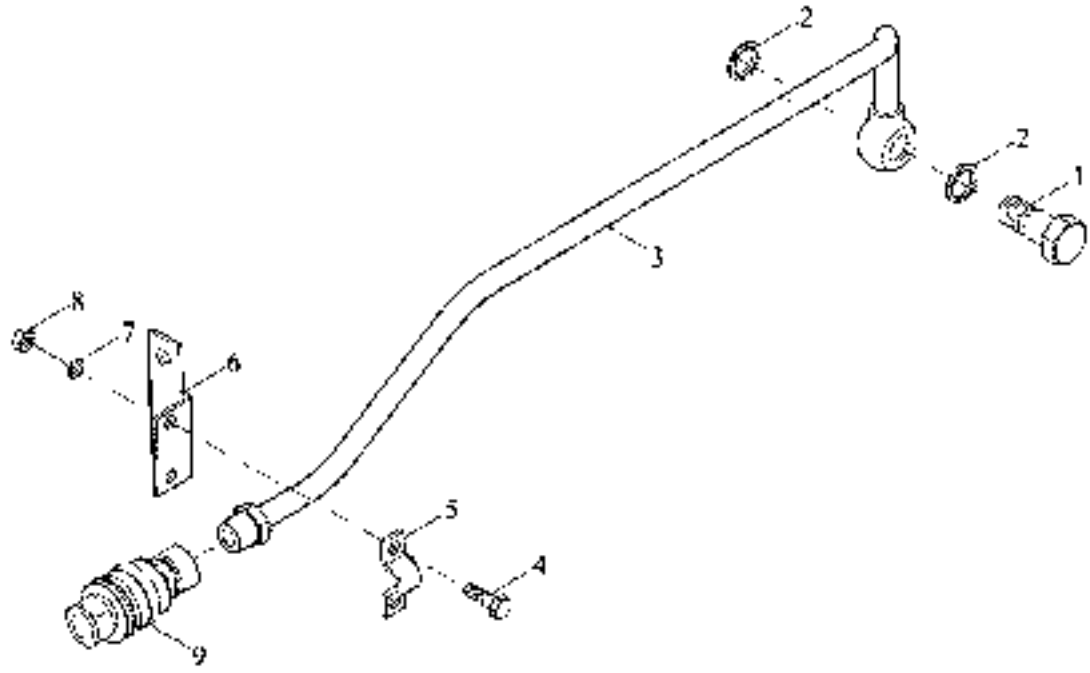

TE354.583 Simple hydraulic output assembly assembly(003)

No.	Part code and specification	Part name	Quantity	Remark
	TE354.583	Simple hydraulic output assembly assembly (003)	1	
1	FT250.55.119	Hollow bolts	1	
2	JBTS82-18	Concaved sealing washer	2	
3	TE354.583.1	Output tubing welding assembly	1	
4	GBT5783 M8X20-8.8 A2L	Hex bolt	2	
5	FT250.55.120	Hose clamp	1	
6	FT250.56.144	Tubing support	1	
7	GB193-8-A0P	Normal type single coil spring lock washer	2	
8	GBT6170-M8 8 A2L	Type 1 hexagon nut	2	
9	FT354.58A.030	Quick change connector	1	

TE250.556B Hydraulic fuel tank assembly(009)

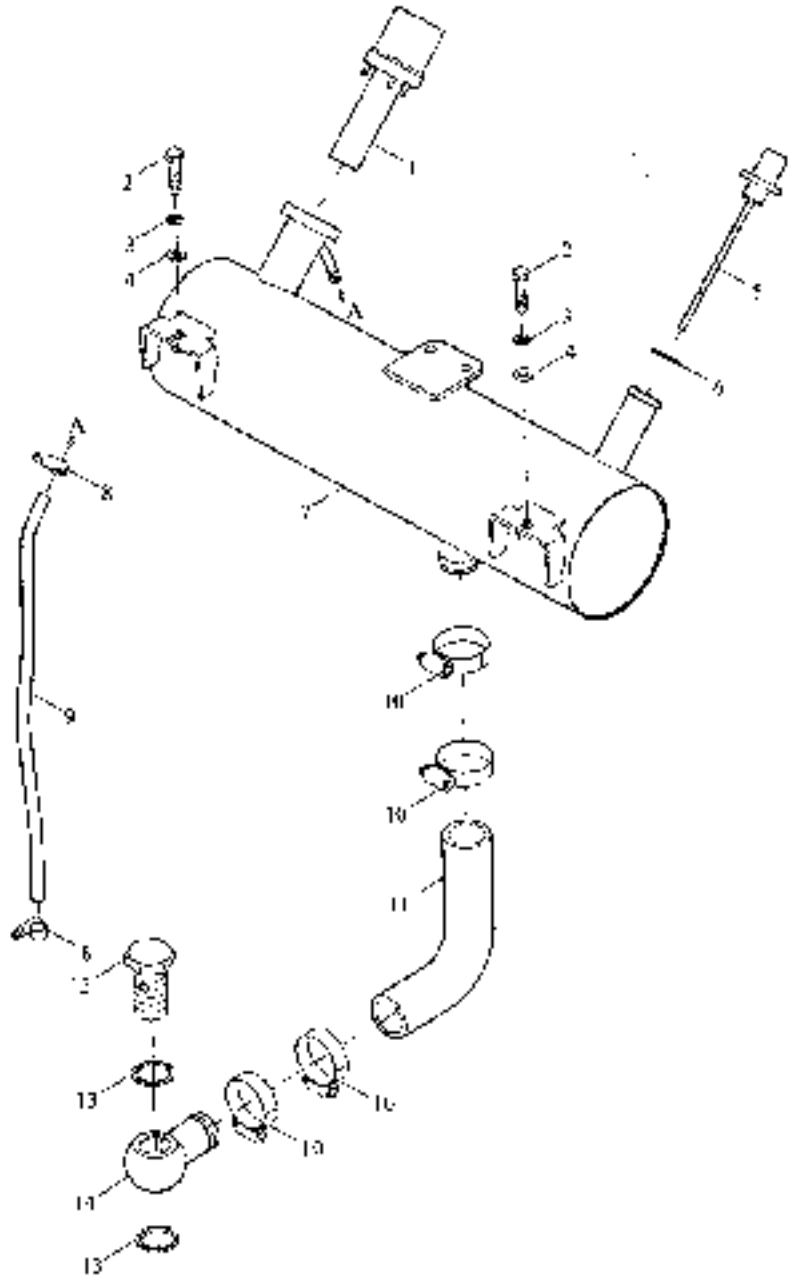

TE250.556B Hydraulic fuel tank assembly(009)

No.	Part code and specification	Part name	Quantity	Remark
	TE250.556B	Hydraulic fuel tank assembly	1	
1	TD800.556.4	Tank air filter	1	
2	GBT5783-M10×35-8.8 A3L	Hex bolt	2	
3	GBT93 10-A0P	Normal type single coil spring lock washer	2	
4	GBT97.1 10-A0P	Plain washer	2	
5	TD800.556.3	Oil gauge assembly	1	
6	JBT982-18	Combined sealing washer	1	
7	TE250.556B.1	Hydraulic fuel tank welding	1	
8	Q67512	Type A Worm Drive Hose Hoop	2	
9	TE250.556B-02	Breathing hose	1	
10	Q67645	Type B worm drive hose hoop	4	
11	TE250.556B-01	Into the hose	1	
12	TE250.556B-04	Hollow bolt	1	
13	JBT982-27	Combined sealing washer	2	
14	TE250.556B-03	Hose connector	1	

FT300.49.001 Tool kit assembly

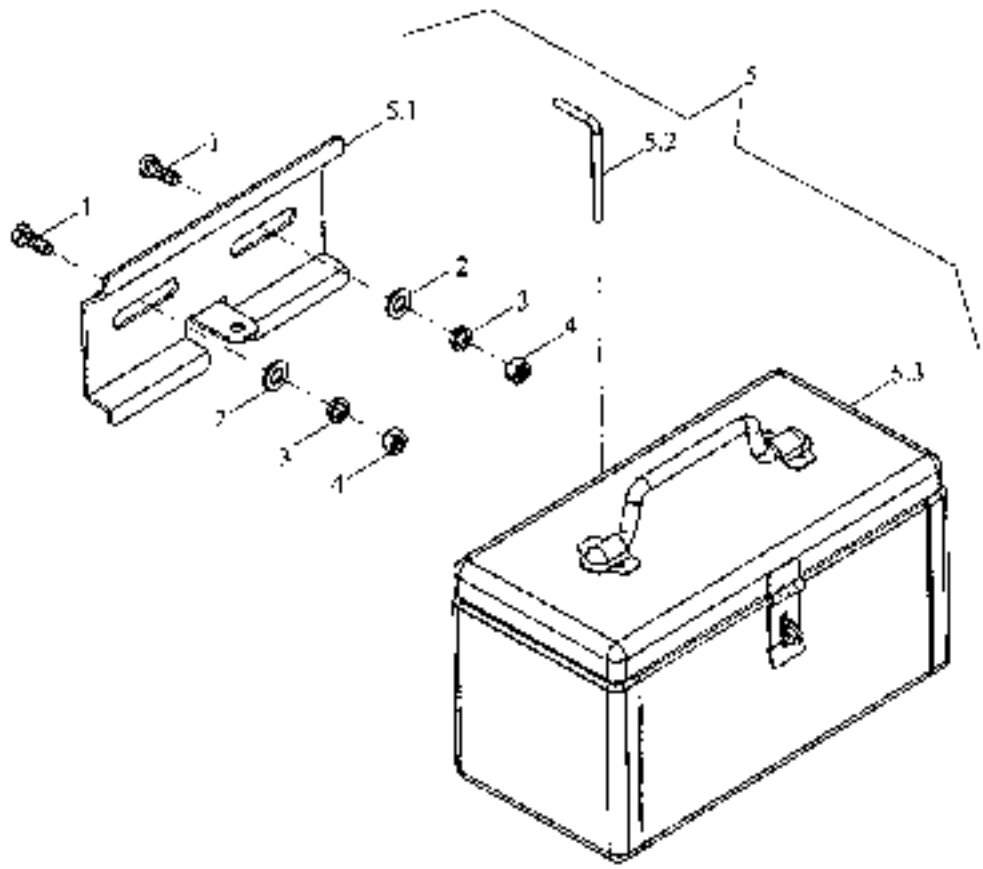

FT300.49.001 Tool kit assembly

No.	Part code and specification	Part name	Quantity	Remarks
1	GBT5782-M12X35-8.8-A3L	Hex bolt	2	
2	GBT97.1-12-A0F	Plain washer	2	
3	GBT93-12-A0F	Normal type single coil spring lock washer	2	
4	GBT6170-M12-8-A3L	Type I hexagon nut	2	
5	TB400.49.3	Toolbox supply assembly	1	
5.1	FT65.49.103	Fixed support plate	1	
5.2	FT65.49.102	Plug	1	
5.3	TB400.49.1.1	Toolbox welding riveting assembly	1	