Zetor

PROXIMA CL

OPERATOR´S MANUAL

07/2017

80 90

Tractor is Zetor. Since 1946.

ZETOR

This Operator's Manual for the Zetor tractors, which we are presenting to you will help you to become familiar with the operation and maintenance of your new tractor.
Although many of you have rich experience with the operation of other tractors, please, read the information contained in this Operator's Manual very carefully.
In the Manual you will find a lot of new information and get a perfect overview of how to use the tractor with maximum efficiency during various kinds of work.
If you observe the rules of tractor operation and maintenance and driving safety, your new tractor will become your reliable and long-term friend.
The manufacturer of the tractor wishes you thousands of hours of satisfactory work.

ZETOR
Brno

The technical specifications and information about the design, equipment, material and appearance are valid at the time of print. The manufacturer reserves the right to implement changes.

The instructions for use are a part of the machine.

CONTENTS

Location of serial numbers **9**
Safety instructions for users **11**
General safety regulations 11
Proper clothing 11
Starting the engine 12
Driving operation 12
Transportation of persons, operation 13
Fire prevention principles 14
Preventive daily maintenance 14
Driver's seat 29
Front passenger´s seat notification 15
Protection of cab against aerosols 16
Tractors equipped with front end loader 16
Principles for operating tractors equipped with front end loader 17
Zetor tractors used for work in the woods 18
Safety labels 18
Preventive daily service **19**
Preventive daily maintenance 19
Fuel system leaks 19
Engine oil level 19
Cooling system 20
Liquid brakes 20
Trailer brakes 20
Hydrostatic steering 20
Air cleaner 21
Cab filtration 21
Hitches 21
After work with front implements and in case of cooler clogging 21
Tyres and wheels 22
Short functional test 22
Acquaintance with tractor **23**
Safety cab 23
Opening doors from the outside 23
Opening the door from the inside 23
Rear window 24
Side window 24
Right rear panel 24
Rear view mirrors 24
Sun screen 25
Internal lighting 25
Washer nozzle 25
Windshield washer tank 26
Washer control 26
Passenger´s seat 27
Driver's seat Mars Svratka 28
Driver's seat Sears 29
Driver´s seat 29
Tilt steering wheel 30
Tilting and protrusion of steering wheel 30
*Air filter with active carbon 31
Heating control panel, * air-condition 32
Heating valve control (A) 32
Switch air-condition (C) 32
Air circulation in cabin control (D) 33
Proper function of the heating and air-condition system 33
Fast heating of the cabin area 33
Fast cooling of the space of the cabin 33
Operation of heating or air-condition with tractor´s work 34
Immediately after cooling the cabin 34
Air-condition and heating registers (A) 35
Front windshield (B) defrosting 35
Control panel on right cab pillar 35
Dashboard 36

CONTENTS

Display of PTO speed....37
Switchers, switches and levers....38
Lights switch....39
Switch of warning lights....39
Lights switch between the grill and the cabin....39
Direction lights, lower beam head lights, head lights and horn switches....39
Front wheel drive switch....40
Push button of rear, front differential locks....40
Switch box....40
Switch box key in the position (0)....41
Switch box key in the position (I)....41
Switch box key in the position (II)....41
Manual throttle....42
Pedals and levers....42
Gear shifting lever....42
Gear shifting scheme....42
Reversing lever....43
Road and reduced speeds shifting lever....43
PTO selection control lever....43
PTO speed control lever....43
PTO speed control lever - tractor equipped with reversor or reductor for creeping gears....44
Switching on the front output shaft Zuidberg....44
Parking brake lever, pto shaft control lever and pick up hitch control lever....44
Battery disconnector....45
Fuel tank....45
Fuel tank drain plug....45
Operation....47
Starting the engine....47
If engine does not start....47
Ignition system failure signalization....48
Manipulation with starter....48
Immediately after start....48
Engine heating....49
*Coolant heater....49
Starting the engine while using coolant heater....50
Drive away....50
Diesel particle filter....51
Diesel particle filter - system failures signalization....51
Diesel particle filter failure codes....52
Diesel particle filter regeneration....52
Shifting road and reduced speeds....53
Gear shifting....53
Reversing lever....53
Gear shifting from lower to higher gears....53
Gear shifting from higher to lower gears....54
Travelling up the slope....54
Travelling down the slope....54
Differential lock....55
Control of front driving axle....55
Driving with engaged front driving axle....55
Foot brakes....56
Air brakes of trailers and semi-trailers....56
Warning indication of air pressure drop....56
One-hose and two-hose brakes....57
One-hose brakes....57
Two-hose brakes....57
Hydraulic brakes of trailers....58
Connecting and disconnecting quick couplings of trailer hydraulic brakes....58
Stopping the tractor - manual brake....58
Stopping the engine....59
Leaving the tractor....59
Warning signalization of hydrostatic steering failure....59
Important warnings....59

CONTENTS

Running-in the tractor 61
General principles of new tractor run-in in first 100 hours of operation 61
In first 10 hours of operation 61
From 100 hours of operation 61
Transport use 63
Front hook 63
Multistage adjustable suspension 63
Height adjustment and disassembly of the CBM stage hitch 63
Automatic mouth of the CBM stage hitch 64
Modular system of hitches for trailers and semi-trailers 64
Swinging draw-bar console module 64
Swinging draw-bar console with a fixed pin module 64
Console with a ø 80 ball module 65
Towing bar 65
Hitch for a single-axle CBM semi-trailer 65
Coupling of a single-axle trailer 65
Uncoupling of a single-axle trailer 66
Hook of the mounting for a single-axle trailer 66
Coupling with a trailer or semi-trailer 66
Pto drive of agricultural machines 69
Work with PTO shaft 69
Hand control lever of PTO shaft clutch 69
Hand control lever of PTO shaft clutch with pneumatic control 69
Replaceable end points of rear PTO shaft 70
PTO speed control lever 70
PTO speed control lever - Tractor equipped with reversor or reductor for creeping gears 71
Front PTO shaft 71
Engagement of the front output shaft Zuidberg 71
Maximum transferred output 72
Drive of machines with greater inertia masses 72
Hydraulic system 73
Hydraulic system 73
Hydraulics control panel 73
Ways to regulate inner hydraulic circuit 73
Controlling the inner hydraulic circuit 74
Free (floating) position 74
Adjustable stop 74
Three-point hitch lowering speed control 74
Hydraulic system sensitivity control 75
Position regulation of the lifting of the rear three-point hitch 75
Power regulation of the lifting of the rear three-point hitch 76
Mixed regulation of lifting the rear three-point hitch 76
Exterior rear hydraulic arms controls 77
Outer hydraulic circuit 77
Outer hydraulic circuit controls 78
Locking control levers 78
Different functions of outer hydraulic circuit control levers 79
Different functions of outer hydraulic circuit control levers- one section distributor 80
Amount of oil taken from outer hydraulic drives 81
Connecting and disconnecting quick-couplers 81
Quick-couplings with drip collection 81
Connecting machines and tools to External hydraulic circuit 82
Controlling front three-point hitch 82
Front outlets of the external hydraulic circuit 83
Control of the external hydraulic circuit front outlets 83
Hitches 85
Rear three-point hitch 85
Safety principles of working with the three-point hitch 85
Height adjustment of the lifting draw-bars 86
Fixed and free position of the lower hydraulic draw-bars 86
Limiting draw-bars 86
Upper pull rod 86
Selection of holes in the bracket 87

CONTENTS

*Lower draw bar with slipping out end pieces 87
*Lower draw bar with CBM hooks 87
Securing lower draw bars with CBM hooks 88
*Front three-point hitch 88
Adjusting the lowering rate of the front three-point hitch 89
Hydraulic lock of the front three-point hitch 89
Working and transport position of the front three-point hitch 89
Driving with agricultural machines attached to the front three-point hitch 89
Wheel tread change 91
Change of the front wheel tread at front non-driven axle 91
Setting the front axle knees (extensions) 91
Change of front wheels track with front drive axle 92
Gauges of the front wheels of the front drive axle of the tractors equipped with screwed footer discs 92
Possible adjustable tracks of the front wheels of the front driving axle of the tractors 92
Front wheels track of front drive axle in tractors equipped with non-removable discs 93
Setting wheel stops with front drive axle 94
Front wheels toe-in 94
Adjustment of toe-in of the wheels of the front driving axle 95
Setting the wheel toe-in at tractors without front driving axle 95
Front drive axle fenders 96
Rear wheels wheel track 96
Gauges of the tractor rear wheels equipped with screwed footer discs 96
Rear wheel track change 97
The gauges of the tractor rear wheels equipped with solid discs 97
Additional weights 99
Weights in front of the bonnet mask 99
Weights of the front three-point hitch 99
Weights of rear wheels 99
Valve for filling tyre tubes with liquid 100
Chocking of front wheels 100
Procedure of filling the tyres with liquid 100
Procedure of draining liquid from the tyres 101
Antifreeze solution for tyre filling 101
Electric installation 103
Basic service information 103
Accumulator battery 103
Accumulator battery maintenance 104
Alternator 104
Alternator maintenance 105
Charging control 105
Fuse box 105
Lay out of fuses in the fuse box 106
Checking the adjustment of the front grill headlights 107
Adjusting the front grill headlights 107
Checking the adjustment of the cab roof headlights 108
List of lamps 108
Tractor maintenance 109
Service inspections 109
Steps performed daily before the start of work 109
Steps performed every 50 hours of work 109
Steps performed every 100 hours of work 109
Steps performed every 500 hours of work 109
Steps performed outside the interval of 500 hours of work 110
Monthly performed actions 110
Filling and filter replacement 111
Fuels, coolants and lubricants used - amounts 112
ZETOR service fillings 112
Motor oils 112
Oil to gear systems of tractors 112
Oil for the front driving axle 112
Oil for the hydrostatic steering of the tractors 112
Specification of oils for Zetor engines equipped by diesel particle filter 113
Specification of oil for tractor transmission devices 113

CONTENTS

Specification of oil for the front driving axle 113
Specification of oil for the tractor hydrostatic control system 113
Other recommended service fillings tested on Zetor tractors 113
Oils for Zetor engines which are equipped with diesel particle filter 113
Front PTO oil 114
Oils for tractor transmission gearing 114
Oil for the front driving axle 115
Oil for the hydrostatic steering of the tractors 115
Plastic lubricant for the tractor 115
Hydraulic brake liquid for the tractors 116
Liquid for the cooling system of the tractors 116
Fuel for Zetor engines which are equipped with diesel paricle filter 116
Tractor greasing plan 117
Safety instructions for lubrication of the tractor 117
Solid front drive axle 117
Front non-driving axle 117
Hitch for a single-axle semi-trailer 117
Front three-point hitch 118
Three-point hitch 118
Hitch mouth for a trailer 118
Upper linkage bracket 118
Pin of coupling switching off 118
Reversion lever pin 118
Technical maintenance of the tractors after a general overhaul of the main groups 118
Maintenance instructions 121
Front bonnet opening 121
Checking oil levels in engine 121
Draining oil from engine 121
Replacing full-continuous motor oil filter 122
Pouring oil to engine 122
Fuel filter element replacement 122
Fuel system venting 122
Dry air filter maintenance - pollution indicator 123
Contamination indicator function 123
Maintenance instruction of dry air filter 123
Main air filter element regeneration 124
Replacing dry filter locking element 124
Back assembly of air filter elements 124
Checking amount of oil in hydrostatic steering tank 124
Replacing oil and hydrostatic steering filter element 125
Venting hydraulic circuit of hydrostatic steering 126
Replacing the hoses of hydrostatic steering 126
Replacing coolant 126
Check and replacement of oil in gearbox, axle drive and rear axle portals 127
Drainage and inspection holes 127
Changing suction filter 128
Replacement of the transmission oil cleaner element with hydraulic pump suction filter 128
Front PTO 128
Filling, controlling and draining hole of oil of front drive axle 129
Filling, controlling and draining hole of oil of front wheels reducers 129
Brake fluid replacement 129
Cleaning the heating filters 129
Air filter with active carbon 130
Carbon filter installation instructions 130
Air-conditioning maintenance 130
Draining condensate from the air reservoir 131
Checking the air systems for leaks 131
Working pressure of air brakes 132
Maintenance and treatment of tyres 132
Storing the tractor 132
Diesel particle filter maintenance 132
Adjustment 133
Cogged belt tension 133

CONTENTS

Bleeding of tractor brake system 133
1. Bleeding of pressure air brake system for trailers 134
2. Bleeding of rear wheel brakes 134
3. Bleeding of hydraulic brakes of trailer 135
Check and adjustment of service and parking brakes 135
Service brake adjustment 136
Parking brake adjustment 136
Adjustment of free travel of brake pedals 137
Adjustment of free travel of clutch pedal 137
Bleeding of hydraulic clutch circuit 137
Adjustment of mechanical control of PTO clutch 138
Adjustment of pneumatic control of PTO clutch with mechanical connection 139
Engine travel clutch adjustment 140
Play adjustment of front wheel roller bearings at tractor without front driving axle 140
Adjustment of hitch for single-axle trailers 140
Adjustment of bowden cable 140
Calibration of travel speed of digital dashboard 141
Main technical parameters 143
Main dimensions of tractor (mm) 143
Technical specifications of engines of tractors Proxima (Stage III B 16V) 144
Max. allowed load of front axle tractors without front drive (kg) 145
Max. permitted loading of the front axle tractors with front drive (kg) 145
Max. allowed load of rear axle (kg) 145
Max. allowed weight of set 'tractor + hitched implement' (kg) 145
Condition of steeringability 145
Loading capacity of front tires 146
Loading capacity of rear tires 148
Change of load capacity of front tires % 150
Change of load capacity of rear tires % 150
Permitted combinations of wheels for tractors 150
Lifting force of the three-point hitch 151
Power 151
Tensile force 151
Speed of tractor with engine revolutions of 2 200 rpm and parameter of rear wheels (km/h) 152
Tractor equipped with synchronized transmission - speed 30 km.h-1 152
Tractor equipped with synchronized transmission - speed 40 km.h-1 152
Tractor equipped with synchronized transmission and reversor - speed 30 km.h-1 153
Tractor equipped with synchronized transmission and reversor - speed 40 km.h-1 154
Tractor equipped with reductor for creeping gears - speed 30 km.h-1 155
Tractor equipped with reductor for creeping gears - speed 40 km.h-1 156
Standard tractors 157
Independent rear PTO shaft rotation 157
Tractors equipped with reversation or creeper 157
Rear independent PTO shaft rotation 157
Front PTO shaft 157
Contour and tread turning diameters tractors without front drive 158
Contour and tread turning diameters tractors with front drive 158
Calculation of tractor load limit 159
Index 163

LOCATION OF SERIAL NUMBERS

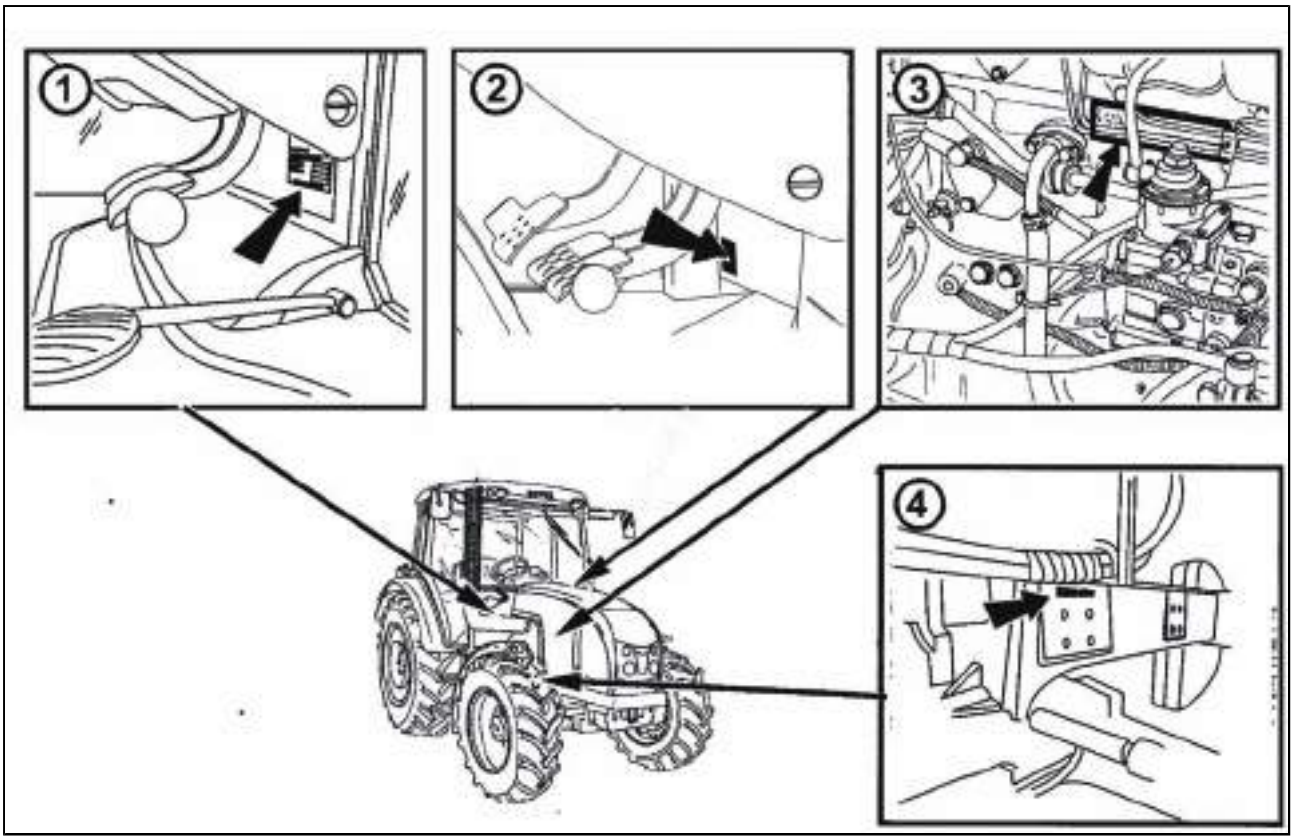

P15N069

1. Tractor data plate
2. Cab serial number
3. Engine serial number
4. Tractor serial number

When ordering spare parts and within all written and oral communication always specify the data of your tractor that should be written in the frames below.

Tractor type

Tractor serial number

Engine serial number

LOCATION OF SERIAL NUMBERS

The 'right', 'left', 'front' and 'back' indications refer to the driving direction of the tractor.

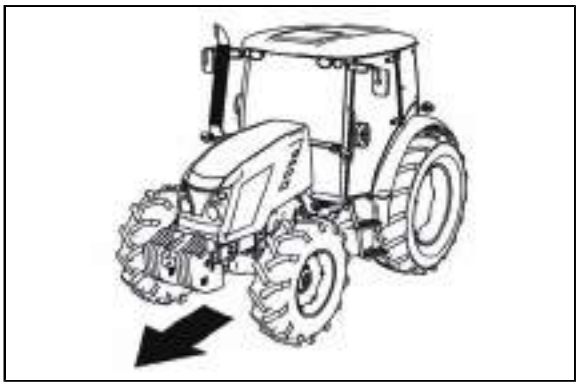

G3

SAFETY INSTRUCTIONS FOR USERS

Please, pay increased attention to the parts of the Operator´s Manual that are marked with this symbol.

This symbol accompanies all important warnings that concern operation safety. Observe these instructions and be extremely careful in these cases! Inform your colleagues and other users about these warnings.

Carefully study the chapters marked with this symbol before starting to perform operation, repairs and adjustments of your tractor.

This symbol identifies all important information concerning operation, adjustment and repairs of the starter motor. Observe these instructions and be extremely careful in these cases!

This symbol marks parts of the Operator´s Manual concerning environment protection. Or possibly sections describing handling of dangerous waste.

* This symbol refers to optional tractor accessories installed by the manufacturer on the customer´s request.

Instruction manual´s passages related only to models equipped with DPF (diesel particle filter) are labelled with this symbol.

Accessories that are not installed by the manufacturer in the standard way or * optionally on the customer´s request (in the production plant) cannot be subject to a claim.

General safety regulations

- The tractor may only be operated by a trained person that has a valid driving licence and has been thoroughly acquainted with the operation and safety rules.
- Besides the safety instructions mentioned in the Operator´s Manual you are obliged to respect generally valid safety and traffic rules of the country where the tractor is used.

Proper clothing

- Do not wear loose clothing and free flying long hair.
- During all work use suitable (prescribed) means of personal protection (working boots, gloves, goggles, etc.)

SAFETY INSTRUCTIONS FOR USERS

Starting the engine

- Only start the engine from the driver´s seat with the clutch pedal fully depressed.

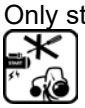

Life hazard when starting by means of short-circuiting the starter terminals!

- The key in the switch box must be in the 'I' position.
- When heating the engine with the * electric heater first plug the power supply cord to the heater and only then to the electric mains. After the end of heating first disconnect the heater from the electric mains.

- Starting the engine when driving tractor downhill is forbidden.
- Starting tractor by means of towing with another tractor or vehicle is allowed only when the pull bar is used.

Driving operation

- Hoses of the hydrostatic steering, brakes and fuel system must be checked and replaced immediately if any signs of damage are found. These are some examples of hose damage signs: - cracks on the hose surface, releasing of pretensioning of hose connection (which can be verified by easy removal of the hose from the connection) and mechanical damage of the hose. Hoses with indicated service life must be replaced immediately after the expiration of the service period.
- The brakes and steering must be in the perfect condition all the time.
- During driving on roads with trailers and tools the brake pedals must be connected with a latch.
- Driving downhill without an engaged gear is forbidden.
- Pay special attention when driving on a slope and muddy, sandy, icy or uneven ground.

- Do not exceed the max. specified inclination angle that is max. 11°. Respectively 12° for tractors with front driving axle.

- During aggregations of the tractor with machines pay attention to possible worsening of stability of the aggregated unit which may be influenced by the connected machine.

- Respect the total permissible weight of the tractor and trailer specified on the data plate of the tractor or on the rear wheel mudguard.
- Do not use the differential lock when driving into a bend.
- It is forbidden to get into and out of a moving tractor.
- When driving with machines attached to the rear hitches the load of the steered axle must not drop below 18 % of the current weight of the set.
- When driving the tractor with agricultural machines attached to the front three-point hitch, reduce the driving speed to 20 km/h.

- During aggregation of Zetor tractors with machines and implements with high tensile resistance when the engine speed drops and the engine tends to stall, the 1R, 2R, 3R reduced gears must not be used for the work with these machines (risk of shaft twist-off).

SAFETY INSTRUCTIONS FOR USERS

Transportation of persons, operation

- The number of persons transported by the tractor must not exceed the number specified in the technical certificate of the tractor.
- Persons that are not authorized to work with the attached implement must not stand between the tractor and the hitched machine (implement).
- Before putting the tractor in motion make sure there is no person or obstacle in the driving direction.

Recovery, pushing

- To recover a tractor that has sunk in mud use a tow bar or rope attached to the front hook

  Never use chains! Rupture of the chain represents a danger of death!
- During recovery it is dangerous to stand near the towing rope.
- It is prohibited to use the tractor axles (individual wheels) as a winch for releasing a sunken tractor.
- The front hook should be only use to recover the entire tractor, i.e. without any trailer or another attached implement.
- Never recover the tractor with reduced gears engaged.
- When pushing other vehicles (trailers, implements, etc.) with the tractor never insert free wooden blocks or bars between the tractor and the pushed vehicle.

- In case of use of the tractor for wrecking or towing purposes, use only the rear hitch.
- When towing the tractor, the reduction gear shift lever must be in the neutral position.

Leaving the tractor

- Park the tractor only on an even land and where not possible, support with a shim assy.
- Do not park the tractor with an attached implement in the lifted position.
- Usually use the left-hand side tractor door when leaving the tractor. Look round whether any vehicle is coming, that could jeopardize your safety when leaving the tractor.
- Use steps and handles when leaving the tractor. When leaving the tractor by the right-hand side door pay attention being in space of shifting lever and hand throttle control.
- Brake the tractor with parking brake before leaving tractor with running engine.

- Do not forget to brake the tractor with parking brake (shift the gear), remove the key from key switch and lock the cab before leaving the tractor.
- At tractor equipped with reversor gear, shift the reversor lever into forward drive position.

With stopped engine only

- All work connected with refuelling, cleaning, lubricating and adjusting the tractor or attached implements may only be performed with the engine and moving parts of the tractor stopped except functional checks of the brakes, hydraulic system and charging.
- Before removing the side plates of the hood it is always necessary to stop the engine. The tractor engine can only run in a closed building or room if sufficient ventilation is ensured. Exhaust gases are harmful for health.

SAFETY INSTRUCTIONS FOR USERS

Fire prevention principles

- Refuel the tractor best after the end of work and with the engine stopped.
- Do not refill fuel up to the top of the fuel tank in summer. Wipe spilt fuel immediately.
- Do not refuel the tractor near open flame and do not smoke.
- Do not smoke and do not use open flame when inspecting the battery electrolyte level.
- Make sure that fire safety instructions are strictly observed in environments with an increased danger of fire (hay-lofts, straw-stacks, etc.).
- The tractors are not equipped with a fire extinguisher from the production plant.

Health and environment protection

- The tractors are not equipped with special filters of air aspirated to the cab. Therefore, they are not designed for work with aerosols and other harmful substances.
- Coolant, brake liquid, kerosene, diesel fuel, mineral oil and other oil products that are used for the operation and maintenance of the tractor may cause various skin disorders in case of direct contact with your skin and can irritate mucous membranes, eyes, the digestive system and upper respiratory ways. Some of them may even cause systemic poisoning when swallowed.
- Persons that handle oil products are obliged to strictly observe safety and hygienic regulations, use suitable means of protection and work in well ventilated rooms.

Working with oil products

- After the end of work or before a meal you should wash yourself with a mild agent and treat your hands with a suitable ointment or cream.
- When connecting and disconnection quick-couplers of the hydraulic circuits use any piece of cloth to remove residual oil remaining in the socket or on the plug of the quick-coupler.

Waste disposal

- When disposing of the tractor or its parts (incl. operation liquids) after the end of their service life you must observe relevant provisions of valid acts and implementation directives of these acts of the country where the tractor is used. The last seller of the tractor is obliged in accordance with the Waste Act to inform the consumer - during the sale of the tractor - about the way of collection of some used parts of the tractor. This is the case of oil and other operation liquids, batteries and tyres. These used products must be received from the consumer without any obligation of the consumer to pay for this service.

Preventive daily maintenance

- Perform this maintenance daily or after every 8 - 10 hours of operation at the latest.

Safety cab

- If the protective frame of the safety cab is damaged by corrosion, an accident or otherwise, the safety cab must be replaced.

Air-conditioning

- Disassembling, turning or otherwise handling the screw union of the air-conditioning system is not allowed in any case. Sudden leak of the coolant may occur, causing quick local cooling. Contact or freezing of components in hands may cause serious damage of some tissues.
- The air-conditioning system is equipped with quick-couplers that make it possible to separate the cab from the tractor body if necessary without any coolant leak. Entrust interventions into the air-conditioning system to a specialized repair shop.

Electric installation

No additional interventions into the electric installation (connection of other electric appliances) are permissible due to its possible overloading!

- The values of the electric installation are:
  Nominal voltage 12 V =
  Grounded minus pole (-) pole
- Using starting trucks or auxiliary power supplies with a different voltage or polarity may cause serious failures of the tractor.
- When handling the battery you must pay increased attention and avoid short-circuits. In tractors equipped with a battery disconnector switch the disconnector off when handling the battery.
- Zetor tractors must not be operated with a disconnected battery as this may lead to a serious failure of the tractor.

Work in a chemically aggressive environment

- If the tractor is operating in a chemically aggressive environment (e.g. working with chemical sprays, fertilizers, in environments with high concentrations of salt, etc.), it is always necessary to clean the tractor thoroughly from chemically aggressive substances and neutralize them after the termination of the work according to the manufacturer's instructions.

Driver's seat

If the driver's seat is equipped with a safety belt, this retaining system must be used during operation of the tractor.

Front passenger´s seat notification

ATTENTION:
Transportation of personnel on front passenger´s seat is allowed only with road transportation.

- Transportation of front passenger outside the seat designed for this purpose is forbidden.
- Using the seat for front passenger during the work with a tractor (e.g. during the work on the fields) is explicitly forbidden.
- The use of safety belt on front passenger´s seat is governed by valid regulations. In this respect, keep the regulations valid in the country, where the tractor is operated.

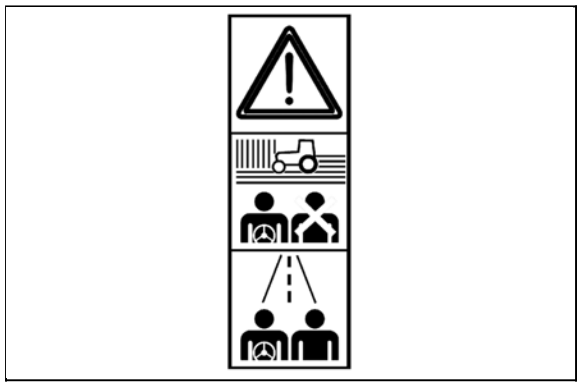

FH13N002

Protection of cab against aerosols

The cab of Zetor tractors in standard design is not designed for work with aerosols and other health hazardous substances.
The level of cab protection in standard design complies with **EN 15695-1:2009 standard - level 2** (only dust proof cab).

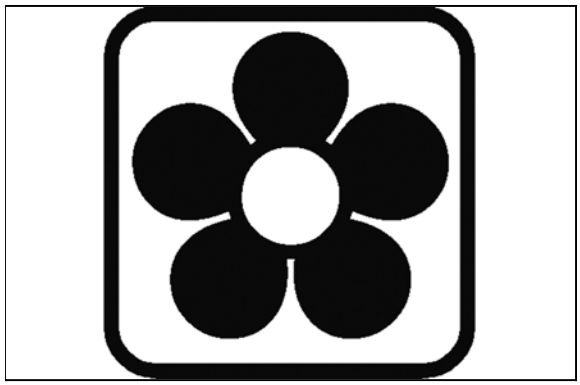

FH13N003

Tractors equipped with front end loader

Zetor Tractors in standard design are designed for utilization in agriculture and are not designed for special purposes.
Tractors designed for operation within the European Union must be equipped, in case of using front end loader, with a protective structure (FOPS - Falling Object Protective Structure) protecting drivers from potential falling objects.
It is necessary to observe applicable local valid regulations in countries which are not part of the European Union.

Two types of cab roofs are mounted to Zetor tractors.

1. Standard cab roof
2. Cab roof designed for tractors equipped with front end loader meeting the OECD code 10 (FOPS) conditions.

Tractors ZETOR supplied already from production with front end loader are equipped with cab roof according to point 2.
From safety reasons, series ZETOR tractors supplied without front end loader with standard roof pursuant to point 1 must not be equipped or used with front end loader.
In case of additional front end loader assembly, it is necessary to equip tractor with cab roof pursuant to point 2.

Only front end loaders approved by ZETOR TRACTORS may be mounted to ZETOR tractor. Additional assembly of front end loader approved by ZETOR TRACTORS can be done only by authorized ZETOR service.
It is forbidden to use front end loaders unapproved of by ZETOR TRACTORS.
Not observing this instruction may cause serious accidents.
Carefully observe instructions for use supplied by the manufacturer of front end loader.

Attachment points for assembly of the front loader to the tractor are specified in the manual of the loader manufacturer. The manual must be approved by the company ZETOR TRACTORS.

SAFETY INSTRUCTIONS FOR USERS

Principles for operating tractors equipped with front end loader

Carefully study operation manual supplied by the manufacturer of front end loader.
In case of discord of Principles for operating tractors equipped with front end loader and operation manual for front end loader, which was supplied by the manufacturer of front end loader, the wording listed in operation manual supplied by the manufacturer of front end loader shall apply.

- The use of front end loader for transporting material at places accessible to the public is forbidden.
- The use of front end loader for transporting material in places inaccessible to the public is possible only in a limited way. In such case, instructions in user's manual supplied by the loader manufacturer must be observed.
- Observe local valid regulations at all times.
- A strict ban on transportation and lifting of people by means of loader is in effect.
- No matter whether the front end loader is loaded or empty, no-one may stand in front of the loader if it is in lifted position. When driving with a lifted loader, there is a risk of load transported by front end loader falling (there is a risk of disrupting the balance of the tractor).
- Never leave the tractor standing with the loader in lifted position.
- If it is necessary to open the bonnet of the engine at intervention, disconnect the front end loader first or secure hydraulic rollers of front end loader by metallic props designed for this purpose.
- Hydraulic circuit of the front end loader is designed in such a way to endure the maximum operation pressure of 20 MPa (200 bar). Do not do any changes on couplers of hydraulic circuit hoses.
- Any front end loader ZETOR mounting without observing the recommendation of ZETOR TRACTORS valid to the day of pur-chase revokes the validity of guarantee for the whole of supply.
- The loader may be used, maintained and repaired only by people who perfectly know the machine and who are informed about potential risks.
- When driving on roads do not transport any material on the front end loader.
- It is necessary to observe special instructions related to accidents prevention and general rules related to technical safety, la-bour medicine, labour hygiene and regulation defining operation on roads.
- The manufacturer does not bear any responsibility for any potential damage incurred as a result of changes conducted on the loader without their consent.
- Do not ever adjust the front end loader by yourselves and do not use the adjusted front end loader without prior ZETOR´s ap-proval. The loader may become dangerous as a result of not observing these instructions. ZETOR TRACTORS shall not be held responsible in case of any damage or injury.
- Use front end loader without additional weights on the tractor (danger of mutual contact). The load of front and rear drive axle must not exceed the maximum permitted load listed in the manual. The use of front end loader requires mounting of counter weight in the rear part of the tractor.
- Each working tool was reconstructed for the purpose of specific usage and has its own tolerance of resistance and tightness.
- It is forbidden to use front end loader for cultivating soil and stubbing. Such work needs to be done with a special tool, front end loader is not designed for doing this.
- Using controls which would set the loader into motion without driver holding the gear shifting lever is strictly forbidden and re-sults in installation not meeting the prescribed standard.
- To penetrate the loaded material, better use the kinetic energy of the tractor rather than pressing force which causes higher strain of both the loader and the tractor.
- Do not overload hydraulic parts if the load is too heavy or pistons are in end positions.
- Control the loader exclusively from driver's seat, if you are sitting on driver's seat.
- Do not leave the seat if you have not blocked any movement of controls.
- No people can be present in the working zone of the loader.
- When working with a lifted loader, mind electric and external cables etc.
- Loader/tractor set needs to be parked on a horizontal and solid base, the arms of the lifting device must be set in the lower position

You will find more information in user's manual to front end loader.

Important notification: Work always safely and with consideration.

SAFETY INSTRUCTIONS FOR USERS

Zetor tractors used for work in the woods

Standard tractors Zetor do not provide sufficient protection for operation in forest terrain as, for example, protection against a fal-ling tree or branch on a cab or penetration of objects to a cab.
If Zetor tractor is utilized for forest work, a tractor operated within the European Union must be protected against these risks.
It is necessary to observe applicable local valid regulations in countries which are not part of the European Union.
To ensure this protection, it is advisable to conduct assembly of a specific protective structure, like for example FOPS / OPS (Fal-ling Object Protective Structure / Operator Protective Structure), tested according to standards for forest machines.

Only forest superstructures approved by ZETOR TRACTORS can be mounted to ZETOR tractors.

In case of additional assembly of further tractor equipment for working in the woods, full responsibility is borne by the supplier and manufacturer of the protective structure that all the safety regulations (e.g: OPS / FOPS), all the conditions of homologation (e.g. the area of driver's view, lighting, parameters, permissible weight etc.) are met, same as for the provision of due assembly of pro-tective equipment. The supplier/manufacturer of protective construction is also obliged to conduct all the necessary validation (approval) steps required by the legislature of the country in which the tractor is operated.

Safety labels

- Important parts of the machine are equipped with safety labels warning against possible danger. Restore damaged or illegible labels and replenish missing ones.
- New components installed during the repair should be provided with up-to-date safety symbols. The safety symbols must be clearly visible!

PREVENTIVE DAILY SERVICE

Preventive daily maintenance
Perform this maintenance daily or after every 8 - 10 hours of operation at the latest.

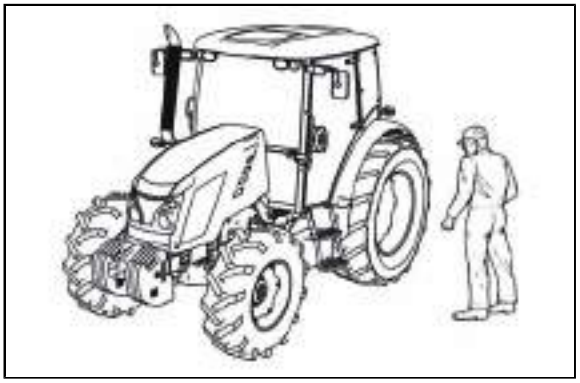

G4

Fuel system leaks
Check the fuel system for leaks, including the fuel tank. Repair any leaks immediately. The hole for draining dirt from the fuel tank is found in its bottom.

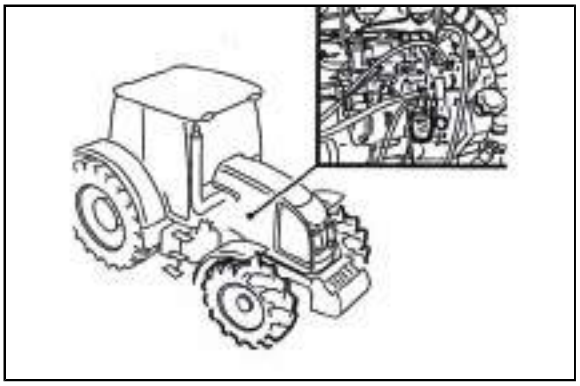

P11NC103

Engine oil level
After unscrewing and removing the oil dip-stick check the oil quantity in the engine and then check the connection of the engine lubrication system for leaks. Maintain the oil level between the dipstick marks.

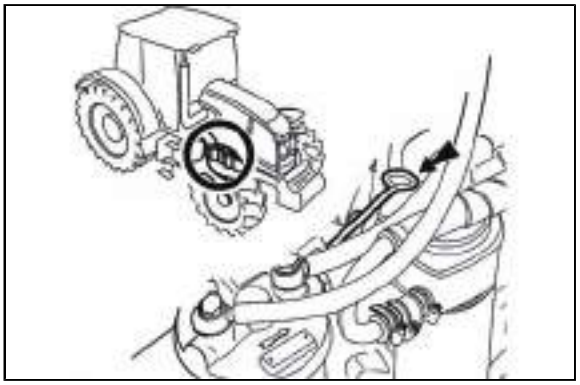

E6g

Cooling system
Check the connections of the engine cooling system for leaks and the coolant quantity in the expansion tank. Replenish the missing quantity up to the upper mark indicated MAX. The minimum acceptable cooling liquid level is indicated by the MIN mark.

Only release the overpressure plug when the coolant has cooled down! There is a danger of scalding!

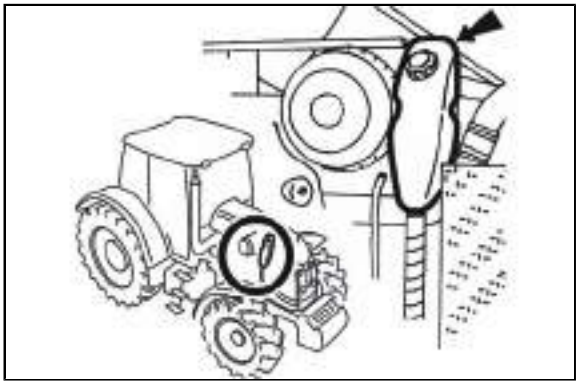

G751a

Liquid brakes
Check the liquid brakes for leaks as well as the liquid control of the clutch and the braking liquid level in the expansion tank.
Maintain the brake liquid level in the range of 3/4 of the tank content (max. level) and 1/2 of the tank content (minimum level).

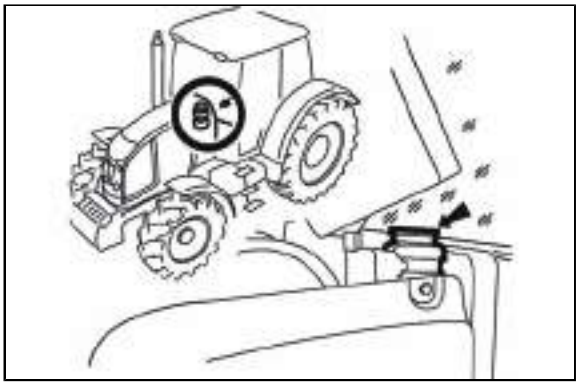

G735a

Trailer brakes

Trailer air brakes
Check tightness of the air system of the brakes and effectiveness of brakes of the tractor with a trailer.

Trailer hydraulic brakes
Check tightness of hydraulic brakes of the trailer and effectiveness of brakes of the tractor with a trailer.

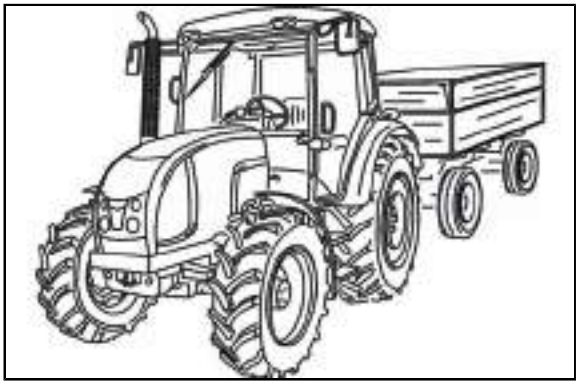

G9

Hydrostatic steering
- Check the oil level in the hydrostatic steering tank.
- Check the tightening of screws and nuts of the steering rods and levers.
- Check the condition of all the hoses of the hydraulic steering circuit for damage and for oil leaks.

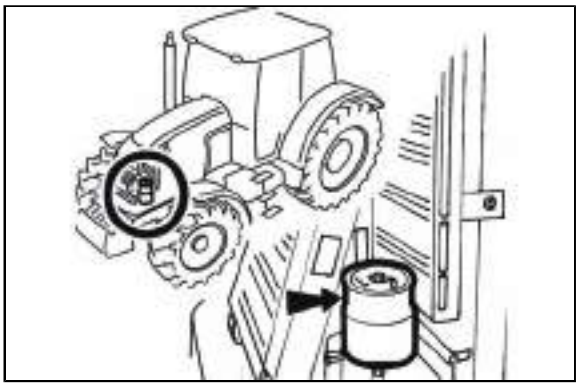

G751b

Air cleaner

Cleaner maintenance must be done after signalization of indicator contamination.
Indicator is accessible after opening front tractor bonnet. It is placed close to the bend of sucking pipeline.
Contamination is mechanically signalized by a red field which is shown after filter insertion clogging directly on contamination indicator.

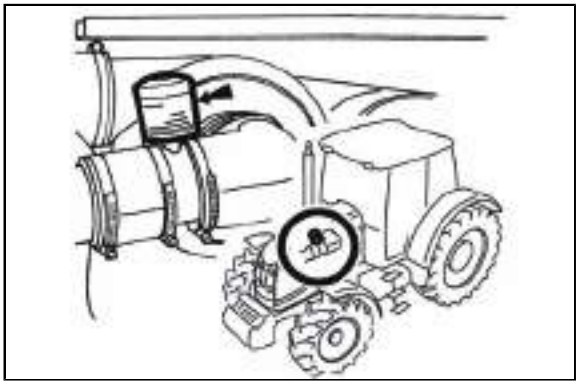

G710b

Cab filtration

Check and if necessary clean the cab ventilation air filters installed in the front overhang of the roof.
The filter exchange interval depends on the dustiness of the working environment.
Partial regeneration can be performed by beating out or blowing with compressed air.
Do the cleaning or replacement of the filter elements after removing the covering grills in the roof overhang.
At the customer's request we supply filters with active carbon.

Don't clean the filter; don't flush it with compressed air.

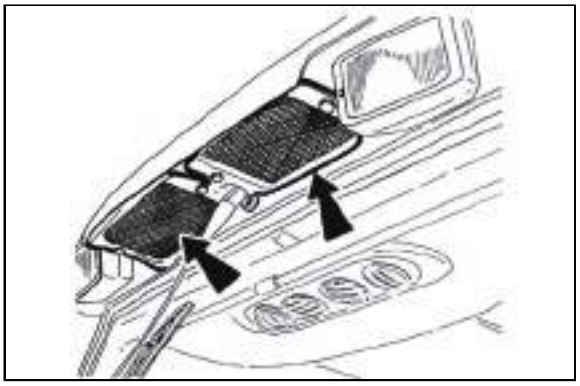

F_02_9

Hitches

Check the condition of the hitching and attachment systems of the tractor and trailer.

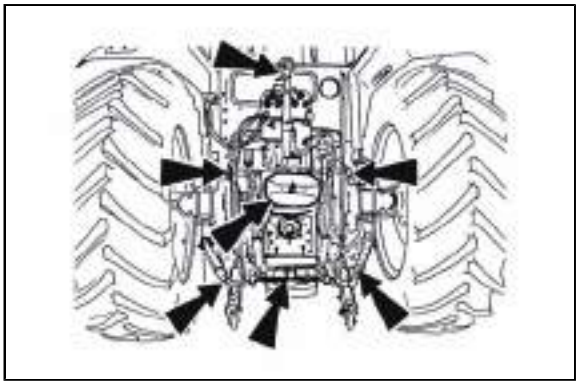

F18

After work with front implements and in case of cooler clogging

After work with front implements:
- Check the connections of the external hydraulic circuit of the control of the front three-point hitch for leaks

Clogging of the coolers:
- Release and slide the cooler to the left side of the tractor.
- Clean the front walls of the engine (gearbox, air-conditioning condenser) cooler with compressed air (blow air in the direction from the engine).
- Remove residual dirt from the space under the hood so that it should not be suctioned again.

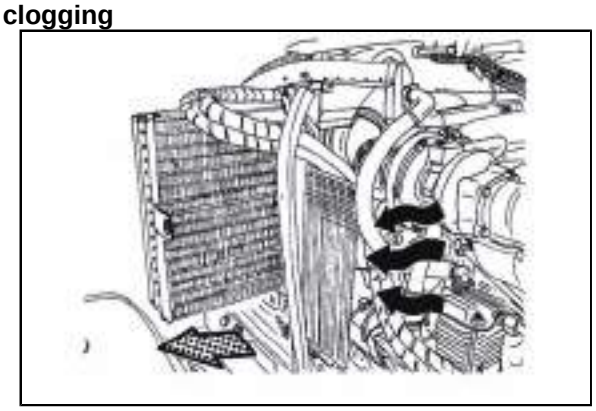

C113

Tyres and wheels

Check the air pressure in the front and rear tyres. Depending on the character of work adjust the pressure to the recommended value. Check and if necessary retighten the bolts of the front and rear wheels.

Never drive with loose wheel bolts!

G11

Short functional test

After starting the engine check whether the hydrostatic steering failure, engine lubrication and charging indicators have gone off.

Verify the function of the hydraulic steering circuits and check them for leaks.

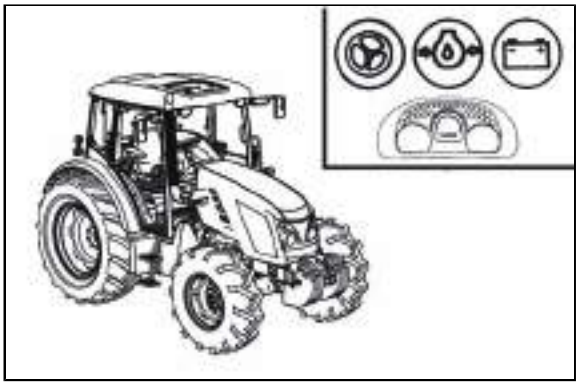

G16

ACQUAINTANCE WITH TRACTOR

Tractor user must be properly acquainted with recommended operating and safety rules for safe tractor operation in advance. It is too late to do it within operation!

Safety cab

Use the left side of the tractor for getting in and off the cab.
Use climbing spurs for getting on and off the cab and hold onto a handle.
Take greater care in the area of gears lever and manual fuel control lever.

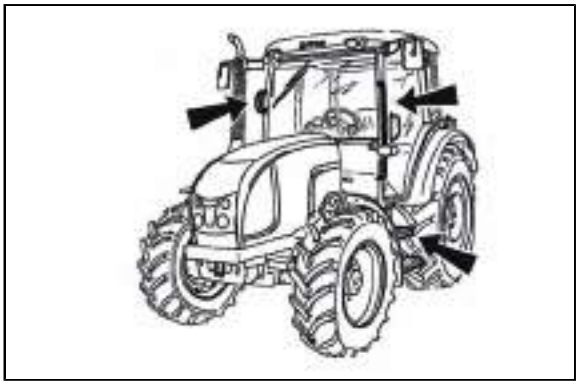

G101

Opening doors from the outside

Left cabin door is lockable from the outside. Right door of the cabin are equipped only with a button from the outside. After unlocking and pressing the button of the lock the door opens by pulling the handle.

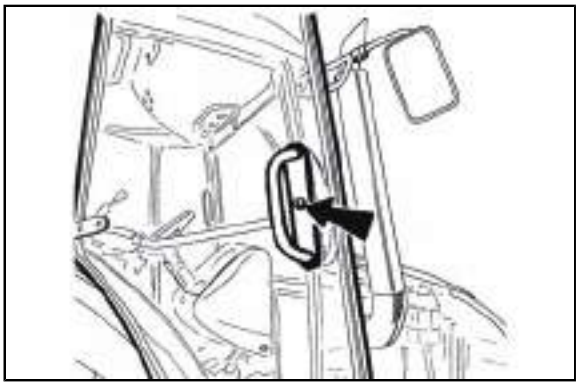

C120

Opening the door from the inside

1. Lever for opening the door from the inside
2. Lever for opening the door from the inside

The door is held by a gas strut with a full opening. Driving with open door is not recommended for their possible damage.

It is forbidden driving with open door due to its possible damage.

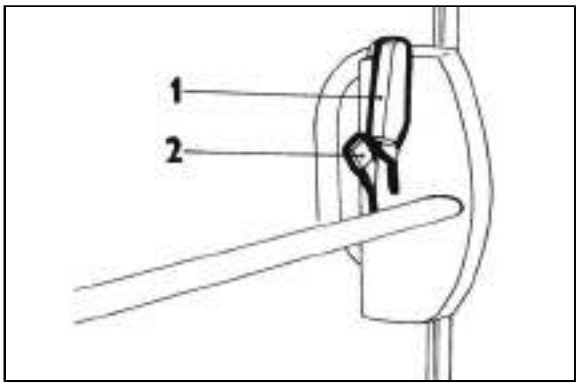

F23

Rear window

Is equipped with a handle and in an open position is locked by gas spruts. Rear window is heated.

When driving on an uneven surface we recommend to secure the window in a closed position - danger of window cracking. Before starting the work with the machinery Before starting the work with mounted in three-point hitch of the tractor, make sure that there is not a danger of collision between the mounted tools with maximum lifting of rear three-point hitch and open rear window. In case of collision we recommend to work with a closed window.

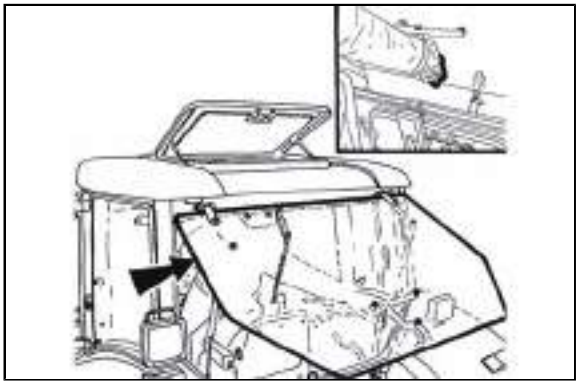

F24

Side window

The window is secured in the partly open position with a plastic latch. You can open the door by lifting the latch towards yourself upwards and pushing it into the groove. Then, the window will be secured in the fixed position.

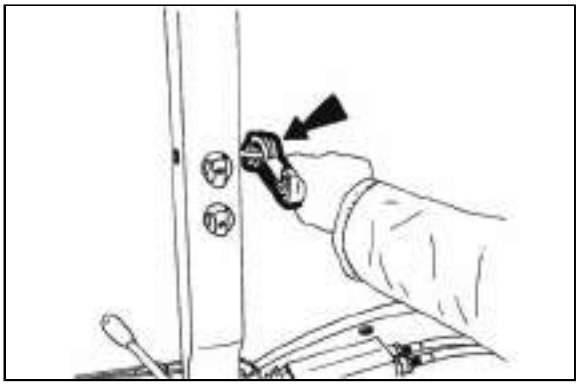

C123

Right rear panel

The right rear panel includes a storage place for a PET bottle (1), socket 12V (2) and cigarette lighter (3).

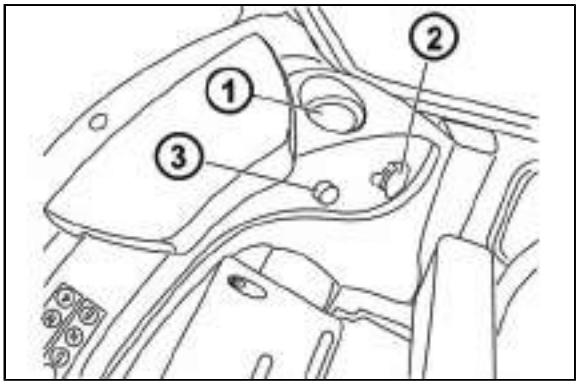

C126

Rear view mirrors

Before the drive or starting the work, adjust rear view mirrors so that they enable to monitor the whole drive way or working field.

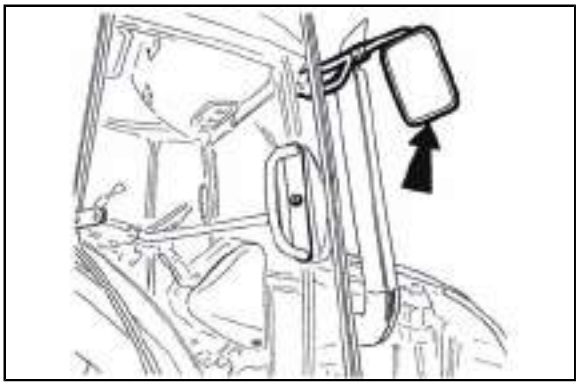

F_02_12

Sun screen

You can draw out the sun shield by pulling the handle in the direction of the arrow. The shield gets back to initial position after pressing the button (1) by an applicable shield.

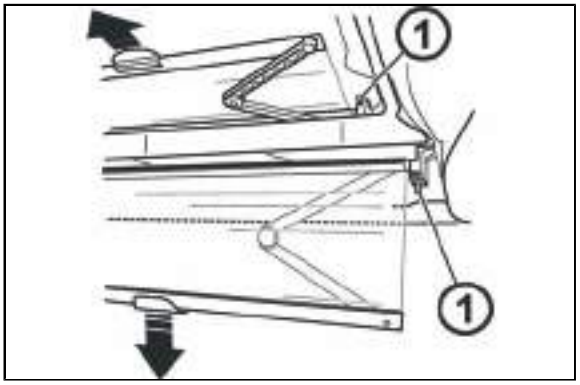

FH13N013

Internal lighting

To be turned on and off by means of a button marked with the arrow.

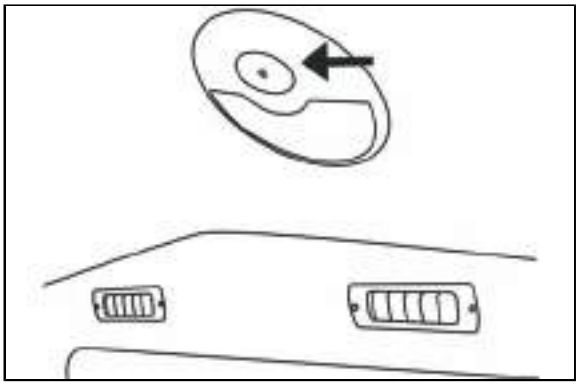

F13BN014

Washer nozzle

The washer nozzle is situated in the upper part of the hood and is adjustable by needle or steel wire of maximum diameter 0,8 mm.

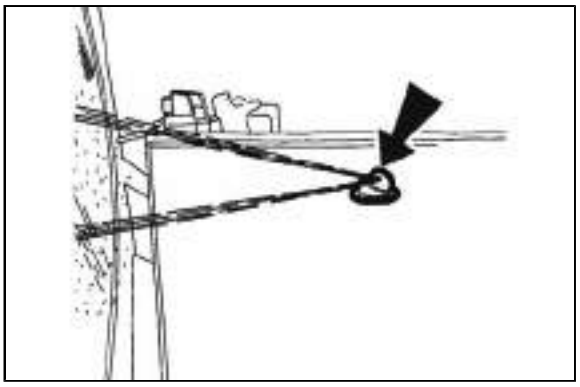

C128

Windshield washer tank

Windshield washer tank is placed on the rear wall of the cabin from the outside side.
The washer tank capacity is 2,5 litres.
In summer the reservoir should be filled with distilled water or mixture for washers.
Antifreeze mixture for washers must be used in winter season for filling the washer tank.

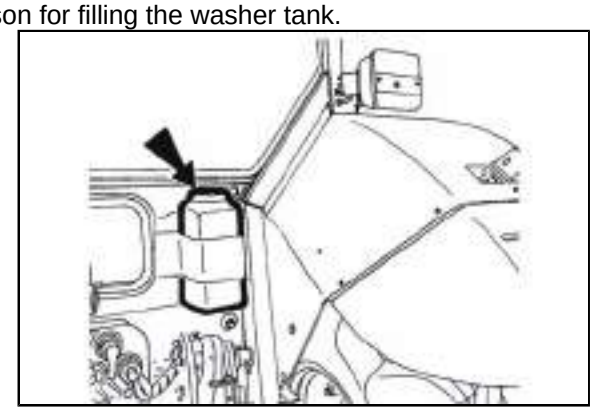

F_02_152a

Washer control

The windshield washer sprays after pressing the switch of front two-speed wiper. This switch is located on the right cab pillar.
Maximum time of uninterrupted operation of washer pump is 20 s.

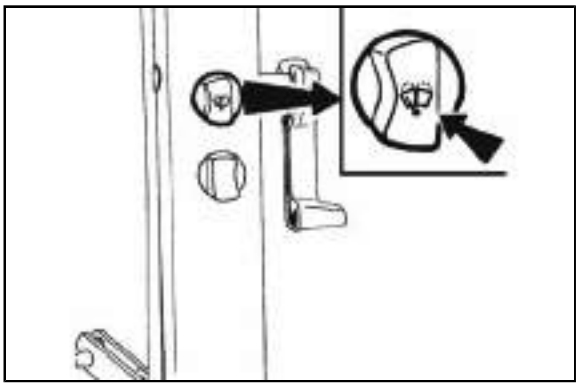

C130

Passenger´s seat
Passenger´s seat is tiltable and placed on the left mudguard of the cabin.

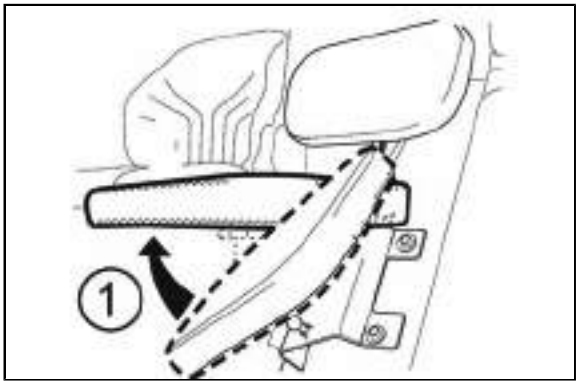

FH12N020_1

Seat tilting out
Passenger´s seat to be tilted out in the direction of an arrow (1) upward. Locking of the seat is done automatically.

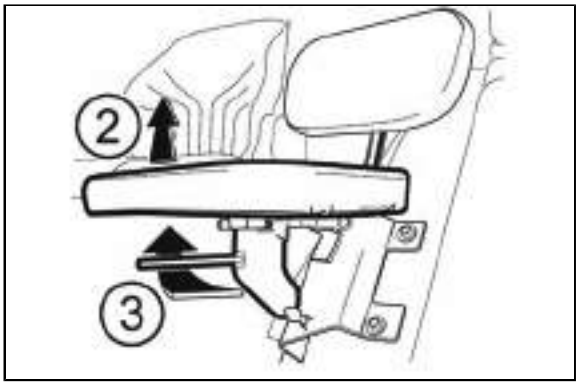

FH12N020_2

Seat tilting
Lift the passenger´s seat in the direction of an arrow (2), pull the lever (3) to the direction of the driver´s seat, tilt the seat in the direction of an arrow (4).

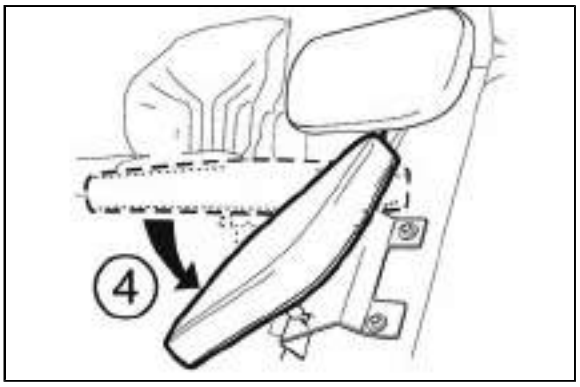

FH12N020_3

Driver's seat Mars Svratka

The suspended seat is adjustable for driver's weight from 50 up to 120 kg. Adjustment is done by turning of square knob. Weight indicator is located in the slot of rear seat cover. Spring stroke is 120 mm.

Do not adjust the seat when driving! Danger of accident!

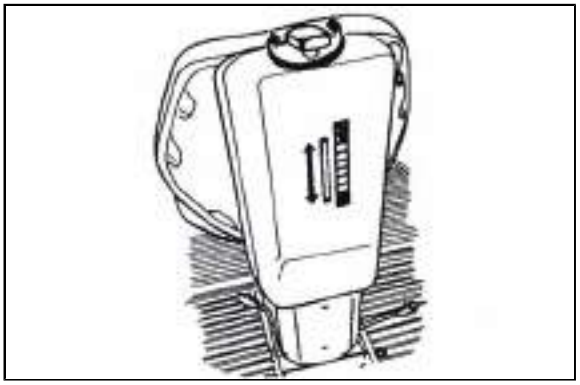

C131

The seat can be longitudinally adjusted within range ± 75 mm (11 positions) after unlocking of left hand side lever.

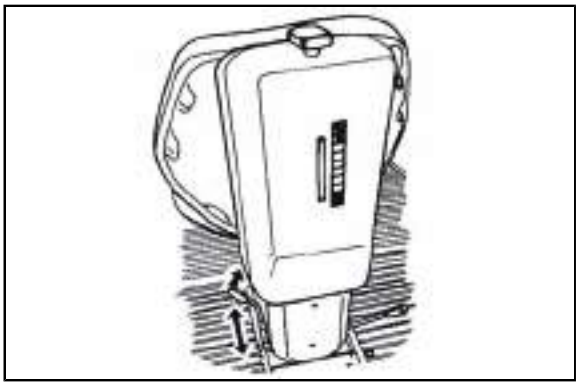

C132

Vertical seat adjustment is done by the right hand side lever; from the middle position to two marginal positions within range ± 30 mm.

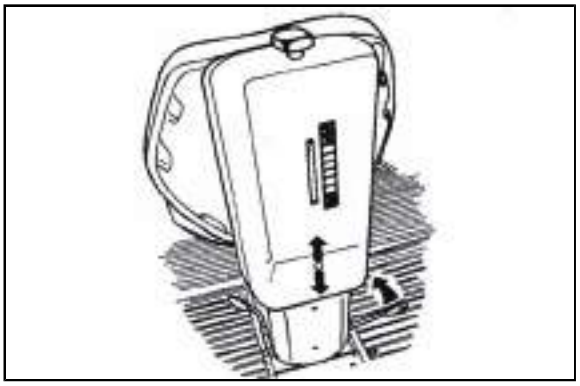

C133

Driver's seat Sears

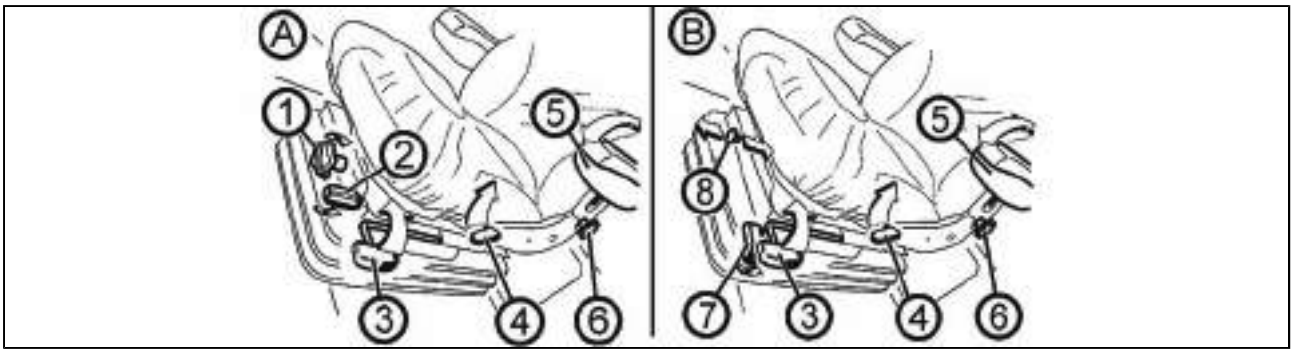

P13N003

The driver's seat Sears can be made with a mechanical (A) or pneumatic (B) suspension.
1 - The seat suspension adjustment controller according to the driver's weight (turn it in the direction based on icons shown on the seat bellows)
2 - The seat height adjustment controller (release the controller to increase the seat height, tighten the controller to decrease the seat height)
3 - The longitudinal seat adjustment lever (pull the lever to adjust the seat lengthwise, return the lever back to its original position to lock the longitudinal adjustment)
4 - The seat backrest inclination adjustment controller (pull the lever to adjust the seat backrest inclination, return the lever back to its original position to lock the backrest position)
5 - Foldable armrest
6 - The armrest height locking adjustment (release the controller to adjust the height of the armrest, tighten the controller to lock the armrest position)
7 - The seat vibration absorption setting (move the controller up to get the float seat position, move the controller to the lower position to lock it)
8 - The seat height adjustment and seat suspension adjustment according to the weight of the driver (push the controller to increase the air pressure in the pneumatic suspension of the seat - when the driver´s weight is bigger, pull the controller to decrease the air pressure in the pneumatic suspension of the seat - at the lower weight of the driver

Driver´s seat

1 - The control of setting the seat suspension according to the driver´s weight (setting by rotation, in the direction according to pictogram on the boot of the seat)
2 - Longitudinal setting of the seat lever
3 - Seat vibrations absorption control (by tilt over of the control forward, floating position of the seat is engaged)
4 - Setting the angle of rest control
5 - Tilting elbow rest
6 - Pneumatic suspension of seat setting control (by pulling in the direction upward, the rigidity of the suspension increases, by pulling in downward direction, it decreases)

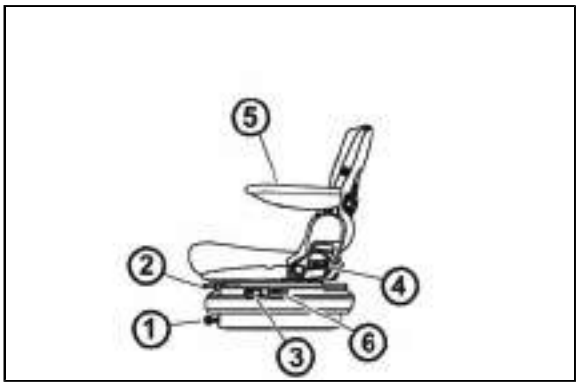

FH12N026

Driver´s seat with mechanical suspension
Control according to points 1, 2, 3, 4 and 5
Point 2, lever is placed on the right

Driver´s seat with pneumatic suspension
Control according to points 2, 3, 4, 5 and 6
Point 2, lever is placed on the left

Tilt steering wheel

Adjusting the angle of the wheel
The angle can be adjusted by tilting the wheel after it is unlocked by moving the lever (1) in the direction shown by the arrow.
After adjusting, lock the wheel by pressing the lever (1) in the opposite direction than shown by the arrow.

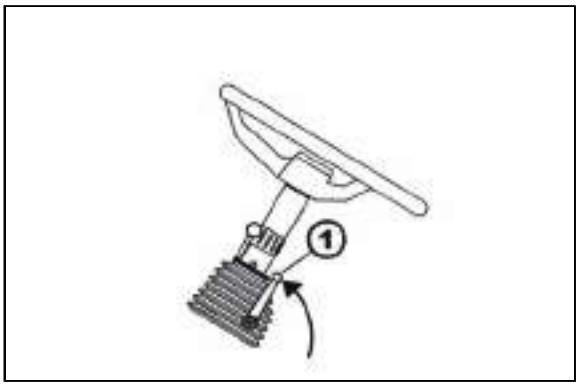

W1

Tilting and protrusion of steering wheel
Tilting column of steering wheel enables variable setting of position of the steering wheel both in terms of angle and height.

Height setting of steering wheel
The setting is done by protrusion or retracting the steering wheel after unlocking arrestment by turning a lever (1) in the direction of an arrow. After setting the steering wheel, lock the lever (1) by tightening in the direction of an arrow.

Angle setting of steering wheel
Setting is done by tilting the steering wheel after unlocking the lock by turning the lever (2) in the direction of the arrow. After setting the steering wheel, secure the lever (2) by retightening against the direction of the arrow.

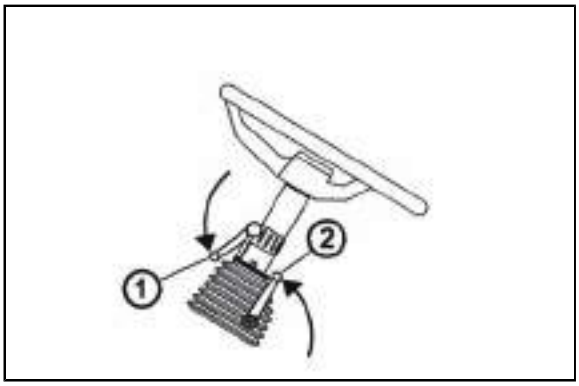

F205

After adjusting, tilt the lever (2) towards the dashboard and the lever (1) in such a way so that it is parallel to the steering wheel column axis.
Pushing the levers in the direction farther from the steering wheel column changes the position of the levers as desired.

***Air filter with active carbon**

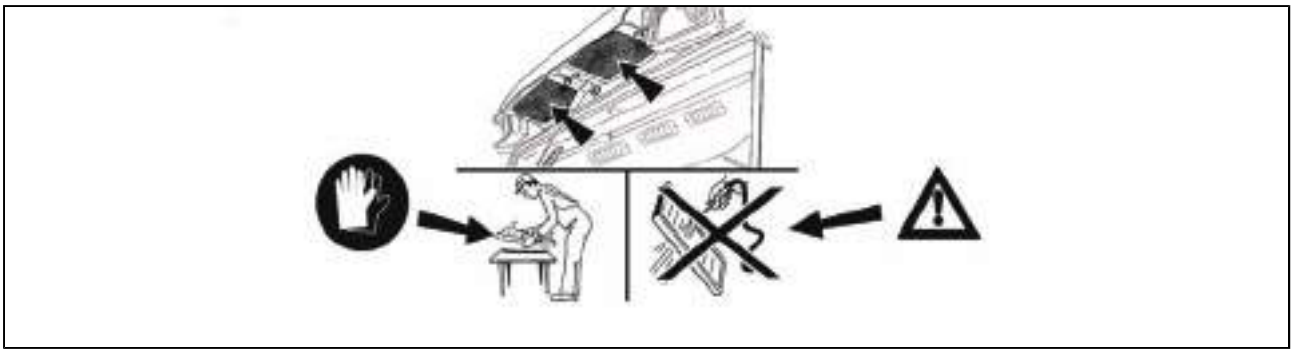

F13BN015

Active carbon filters are installed in the placed of standard dust filter and the replacement is done in the same way as with standard filters. Filter must be inserted with the white side to the grid. Assembly instructions are found in the chapter 'Maintenance instructions'.
Filter is used only when spraying pesticides, then it must be replaced back by a paper filter because the flying dust would clog the carbon filter very fast.
The recirculation control must be in the position 'air is sucked from the outside'.
Ventilator control must be in the position 'maximum ventilator run'.

WARNING: filter does not provide full protection against toxic substances
- Wear protective gloves when manipulating with the filter.
- Do not clean the filter and do not blow through with compressed air.

DANGER: Replace the active carbon filter every 200 hours or 36 months (date of production is given on the filter). If you happen to smell pesticides in the cabin, replace the filter immediately and have the sealing of the cabin checked. Used filters must be damaged in specialized collection centres.

When spraying pesticides and using heating filters with active carbon, the recirculation control must be in the position of 'air sucked from the outside' and the ventilator control 'maximum ventilator run' for creating surplus pressure in the cabin.

Heating control panel, * air-condition
A - heating valve control
B - ventilator control
C - air-condition switch
D - air circulation in the air of cabin lever

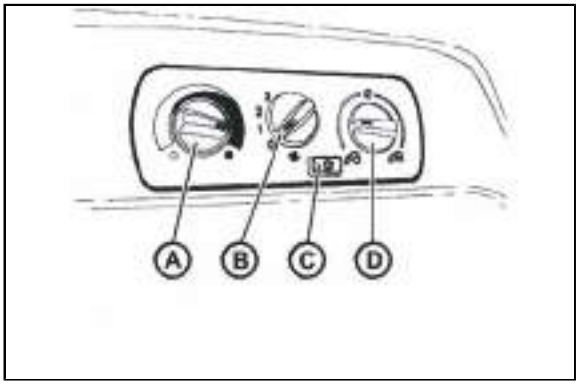

F13BN009

Heating valve control (A)
a - heating valve closed
b - heating valve opened

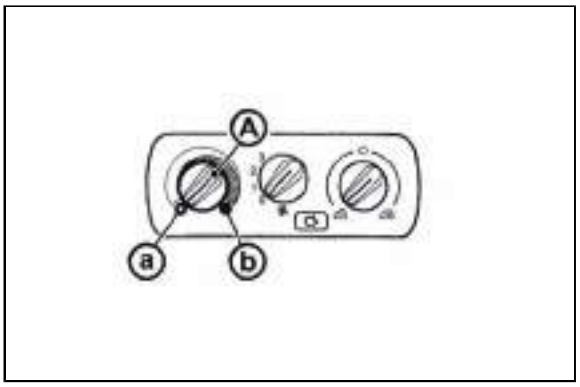

F_02_16_a

Ventilator control (B)
0 - ventilator off
1 - slowly run of ventilator
2 - medium run of ventilator
3 - maximum run of ventilator

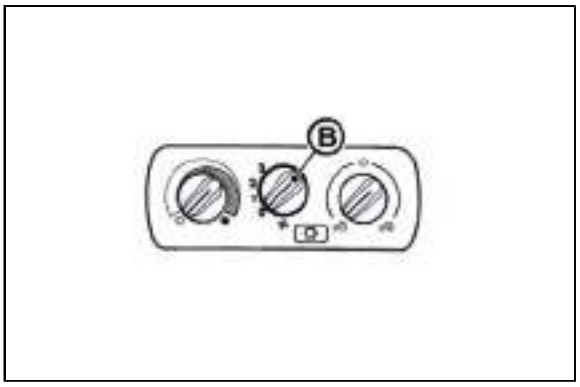

F_02_16_b

Switch air-condition (C)
Do engagement and disengagement of air-condition system function by switching the switch with a symbol of snow flake (C).
You will set the air-condition system going by pressing the switch (the symbol of snow flake lights up).
You will disengage the air-condition system by repeated press of switch (snow flake symbol switches off).

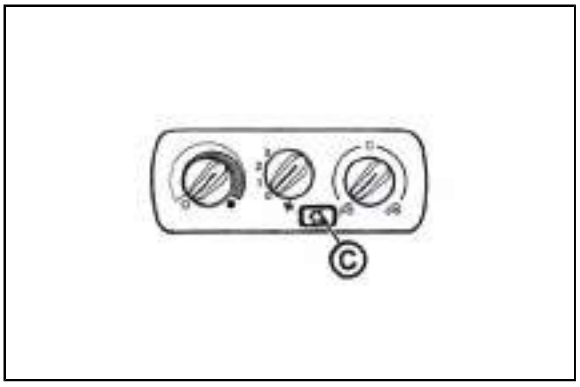

F_02_17a

Air circulation in cabin control (D)

a - Surrounding (outside) air is sucked in through filters to cabin - sucking the air from cabin is closed.
b - Air is sucked in from the space of the cabin and again blown off to the cabin (inner air recirculation for fast adjustment of temperature in the cabin).

The intake of air from the outside of the cabin is completely locked and there is no surplus pressure in the cabin which would prevent pervasion of unfiltered air to the cabin! Do not use this position of the control with work of the tractor!

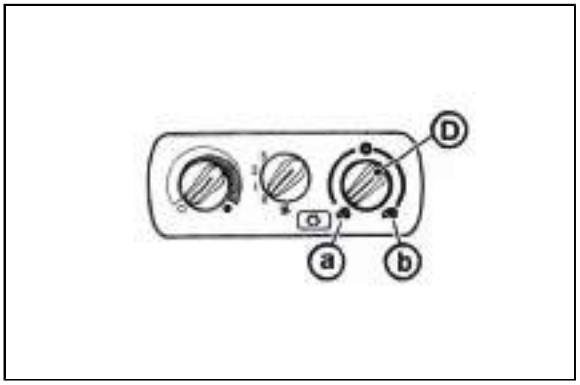

F_02_17b

Proper function of the heating and air-condition system

It is necessary to create surplus pressure in the cabin for proper function of the heating or air-condition. We therefore recommend you to close all the windows and doors and tilting cover of the cabin.

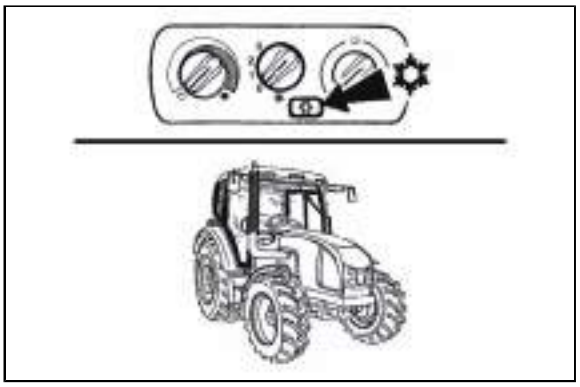

G121

Fast heating of the cabin area

Proceed accordingly:
1 - Turn the heating valve control (A) to the position on the right (fully opened heating valve).
2 - Set air circulation in cabin control (D) to the position of inner circulation.
3 - Select applicable gear of the ventilator run (position 1, 2, 3) by ventilator control (B).
4 - Set the expiration under the requested angle to avoid direct fanning of the people in the cabin.
5 - After heating the space of the cabin, set the air circulation in the cabin control (D) to the position of sucking the outer air - see fig. F_02_17b position (a)

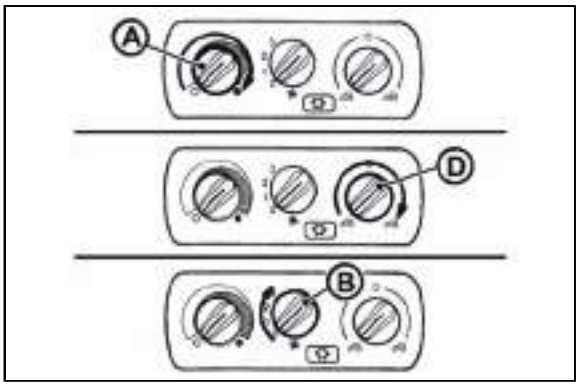

F_02_18a

Fast cooling of the space of the cabin

Proceed accordingly:
1 - Switch the heating valve control lever (A) to the position to the left
2 - Set the air circulation in the cabin lever (D) to the position of outer air sucking
3 - Select an applicable gear of the ventilator run (position 1, 2, 3) by ventilator control (B)
4 - Switch the air-condition system by a switch (C)
5 - Set expiration under the requested angle so that direct fanning of people in the cabin does not occur (the possibility of illness due tointensive cooling of parts of body).

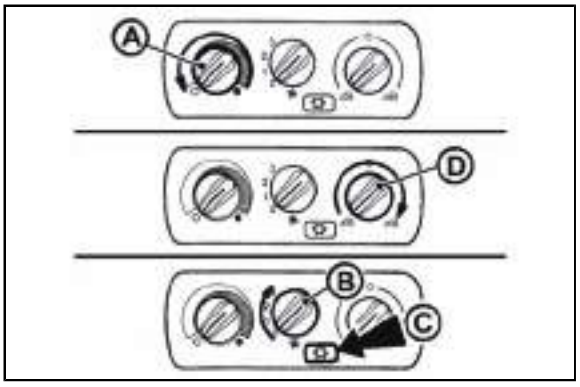

F_02_18

Operation of heating or air-condition with tractor´s work

With engaged inner recirculation of air is the inflow of fresh air closed and there is foul air in the space of the cabin by operator. This state can cause the feeling of fatigue and there can also be penetration of dust to the cabin because of the loss of surplus pressure.

Note: Set the control (D) according to individual requirements on temperature to the position between (a) and (b) so that the ventilator sucks the air from the outside of the cabin through filters, when working.

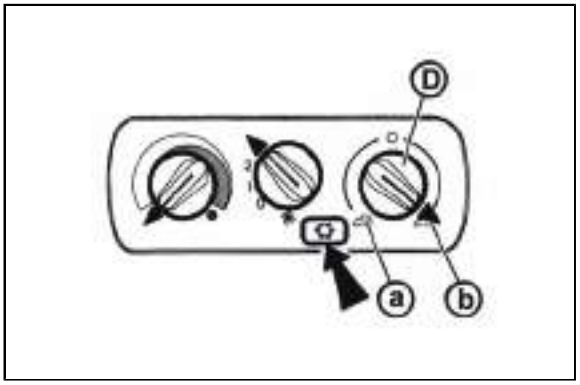

F_02_19

When spraying pesticides and using the heating filter with active carbon, the recirculation controller should be in position 'air is drawn into from the outside' and the fan controller should be in the position 'fan maximum work' to create overpressure in the cabin.

Immediately after cooling the cabin

Immediately after cooling the cabin and lowering the inner temperature on the required values, we recommend the following:

- Switch over the control of air circulation (D) from position (b - air re-circulation) to position (a - outer air suction)
- Do the continuous regulation of the air temperature with air condition on by opening the heating valve (A). The air entering the cabin from expiration is not so intensively dried with this setting.
- Continuous temperature control with air-condition on can be also done by lowering the output of ventilator by switching the control (B) to position 1 or 2.

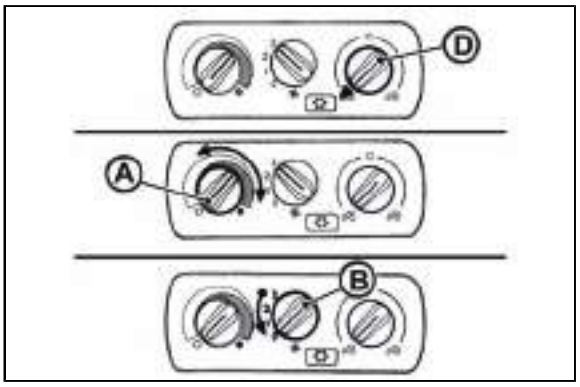

F_02_20

Air-condition and heating registers (A)

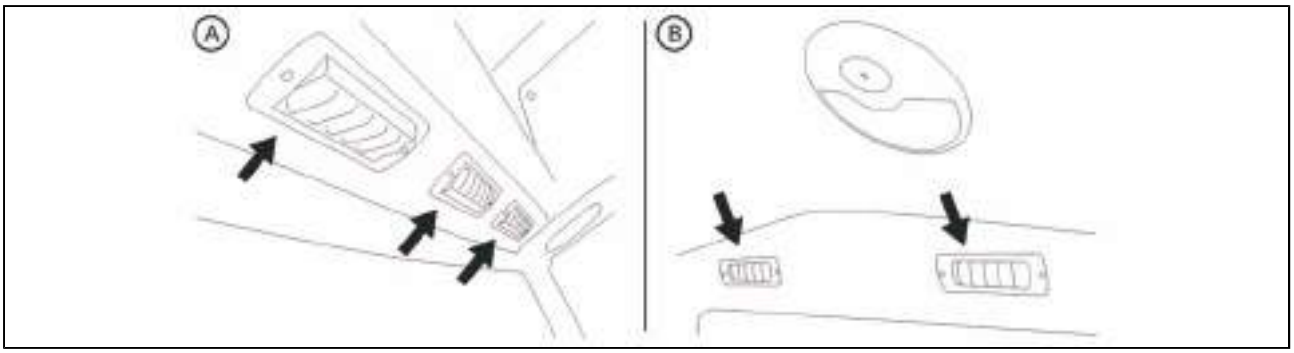

F13BN010

Positionable heating and * air-condition registers, front (A), rear (B).

Front windshield (B) defrosting

To ensure quick defrosting of the front windshield direct the central heating outlets (1) under the angle of approx. 45° towards the windshield. Direct the side outlets (2) under the angle of approx. 45° to the cab corners. After defrosting of the front windshield direct the side outlets to the side glasses of the doors as necessary and gradually defrost them. After defrosting direct the outlets in such a way that the air should not be blown directly to the driver, but down to the driver's legs.

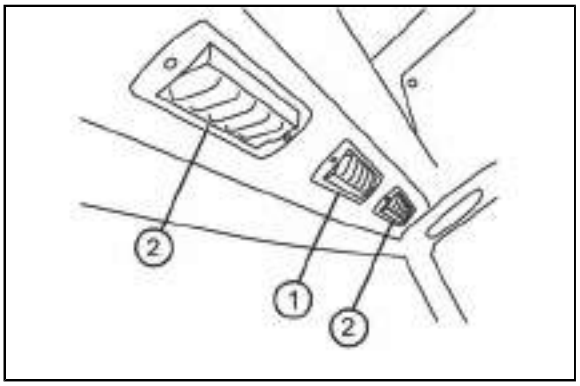

F13BN011

Control panel on right cab pillar

1 - switch of front working lights on cab roof
2 - switch of rear working lights on cab roof
3 - rear window wiper switch
4 - two-position switch of the windscreen wiper and washer
5 - *rear mirrors heating switch
6 - *rear window defroster switch

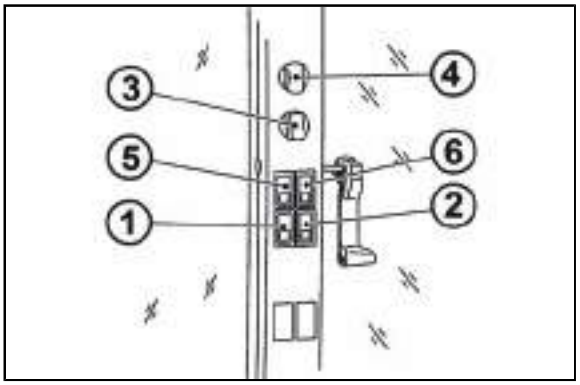

P11NH127a

Dashboard

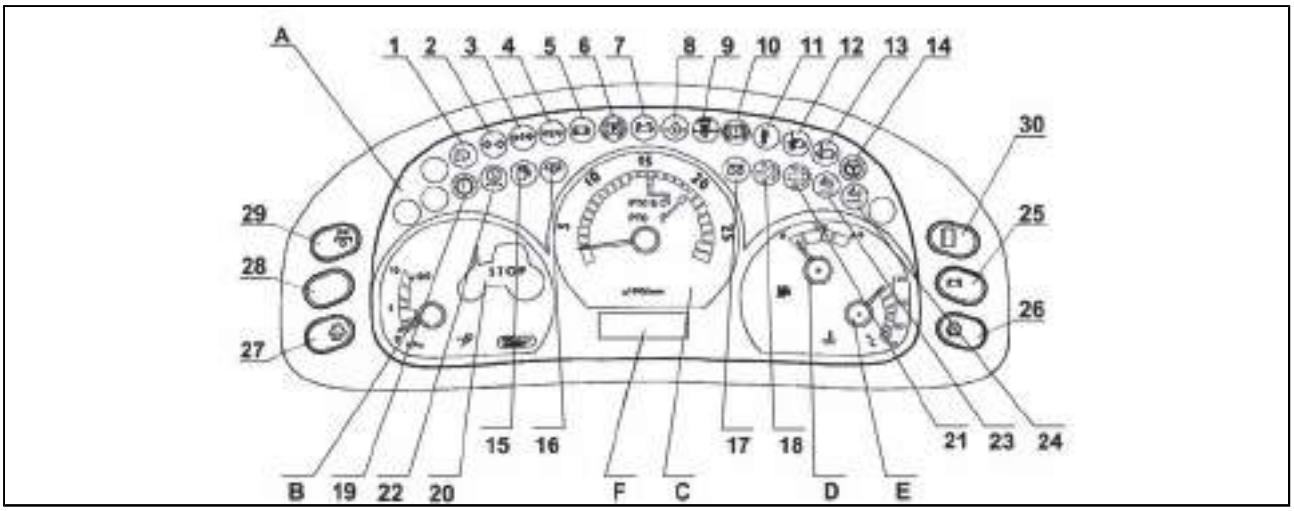

F13BN001

Devices description
A - Indicators
B - Air pressure gauge
C - speedometer
D - fuel gauge
E - coolant thermometer
F - display

Indicators
1 - High beam lights (blue). Lights up when high beam headlights are on.
2 - Tractor turn signal indicator (green)
3 - 1st trailer turn signal indicator (green)
4 - 2nd trailer turn signal indicator (green)
5 - Indicator of minimum air pressure in the brake system (red). Lights up if the air pressure for the air brakes of the trailer drops below the critical limit, i.e. 450 kPa.
6 - Parking brake (red). Lights up when the parking brake lever is in the 'on' position.
7 - Charging. During engine operation it lights up in case of a charging failure. If the engine is stopped, it must light up. For more information see Electrical installation chapter
8 - Lubrication (red). During engine operation it light up if the engine oil pressure drops below 120 to 60 kPa. If the engine is stopped, it must light up.
9 - Air filter clogging indicator (yellow). It lights up with air filter clogging.
10 - Free
11 - Indicator of critical temperature of coolant (red) lights up when reaching a temperature of 100°C (disengaged).
12 - Indicator of engagement of multiplier (green - 1st degree).
13 - Indicator of engagement of multiplier (green - 2nd degree).
14 - Indicator of error signalization in the system of hydrostatic steering (red) With engine engaged lights up with failure of hydrostatic steering. If engine is at standstill, it must be lit.
15 - Fuel (orange). It is lit with residue of 1/6 - 1/10 of tank volume.
16 - Indicator of PTO engagement (orange) is not engaged.
17 - Engine glowing (yellow). Signals activity of device for easing the start of engine.

18 - Diesel particle filter control (green) , for more see chapter 'Driving operation'
19 - Gearbox disorder control (red), for more see 'Driving operation' chapter
20 - Warning indicator (red). Lights up with pressure drop under critical limit i.e. 450 kPa, with engaged parking brake, with charging failure, with low pressure of oil in the engine or with brake lining of the front brake wear off.

21 - Diesel particle filter control (red), for more see 'Driving operation'
22 - Free
23 - Free
24 - Free

Selectors and switches

After pressing the selected switch, the applicable symbol and data is displayed on the display.

25 - Battery voltage button: The voltage value is displayed on the display (with the resolution of 0.1 V).

26 - Button of the number of covered kilometres (per day or since the last reset). The number of kilometres is shown on the display. The value can be reset with long pressing of the button.

27 - Button of immediate travel speed in $km.h^{-1}$, which is displayed on the display.

28 - Free.

29 - 1,000 rpm PTO button. The rpm value with the resolutionof 10 rpm is shown on the display.

Serves only for operation data display.

30 - The switch of hours of operation. The information is displayed on the display.

Display of PTO speed

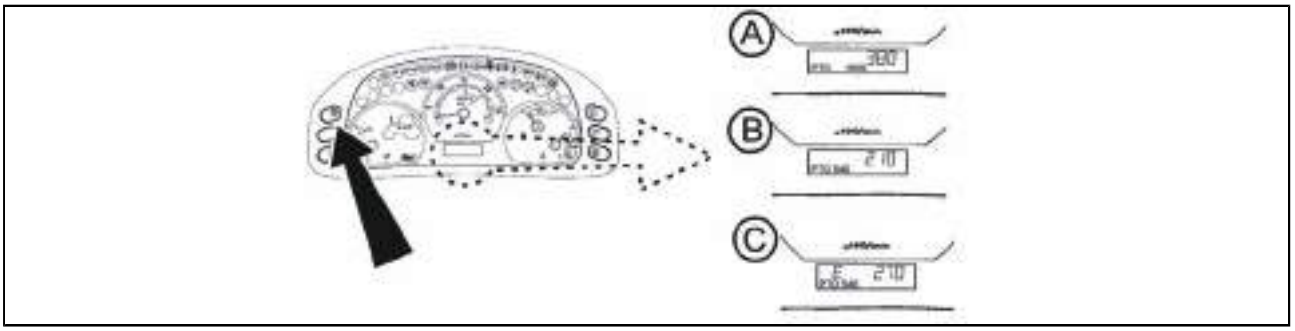

F54e

By pressing the switch marked with the arrow, you will display the PTO speed in the left and right parts of the display.

It is a number of revolutions with engaged PTO independent revolutions.

By pressing the buttons gradually, you will induced the number of PTO revolutions for individual gears of PTO revolutions.

A - for 1,000 revolutions

B - for 540 revolutions

C - for 540E revolutions

The button serves only for displaying data.

Switchers, switches and levers

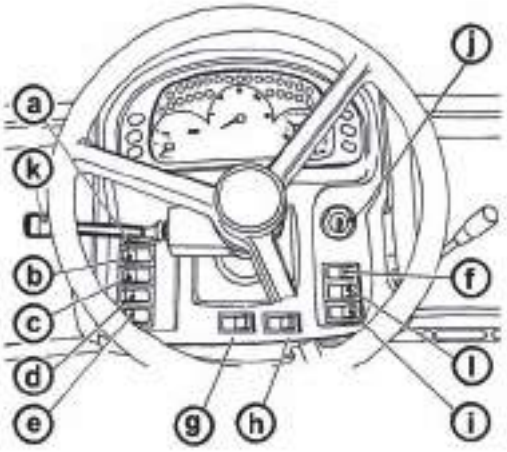

a - Lights switch (off, parking, head)
b - Lower beam lights in the grill of the tractor and working lights in the cabin of the tractor switch
c - Fog light switch (off - on). Fog light function is signalized by a lit symbol on the switch.
d - Working lamp switch (off - on). Working lamp function is signalized by a lit symbol on a switch.
e - Warning lights switch
f - Front drive axle button. Engaged front drive axle is signalized by lit symbol on a switch.
g - Beacon switch (off - on)
h - Working lights in the grill of the bonnet switch (off - on)
i - Differential lock button
j - Switch box
k - Direction lights, lower beam head lights, head lights and horn switches acoustic and light
l - Switch of the front output shaft (on/off). Function of the front output shaft is indicated by an illuminated symbol on the switch. The switch is equipped with a mechanical catch against unintentional switching. When switching on press the catch towards the symbol.

Lights switch

a - illumination off
b - side and end point lights on, illumination of licence label, illuminated
c - all devices on in 'b' position. Lower beam head lights or head beam lights are engaged (according to the position of direction lights, lights and horn switches).

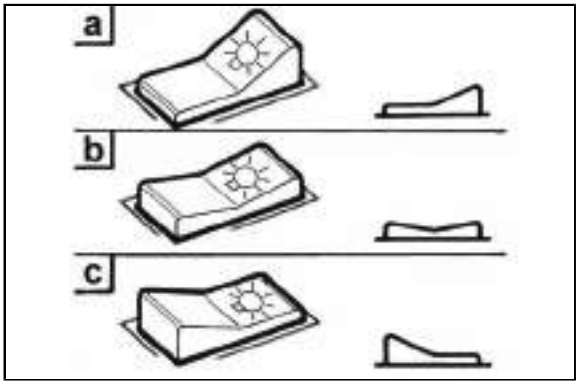

F56

Switch of warning lights

a - warning lights on
b - warning lights off
Function of warning lights is signalized by interrupted blinking control on the dashboard.

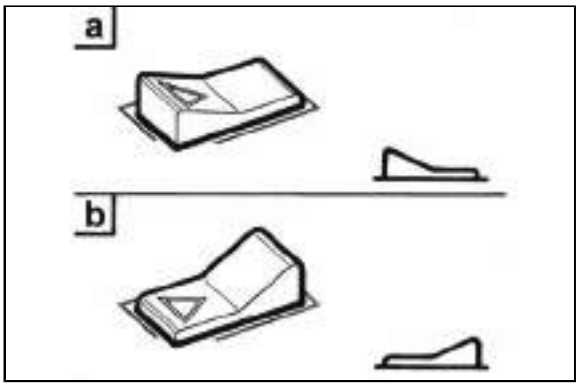

F58

Lights switch between the grill and the cabin

a - roof lights on
b - roof lights off
The switch controls the illumination in the grill or in the roof of the cabin of the tractor. Use the lights in the roof of the cabin only when tools covering headlights in the grill is attached in front three-point hitch. A lit symbol on the switch signalizes light on in the roof.
Headlights can be lit only in the grill of the bonnet.

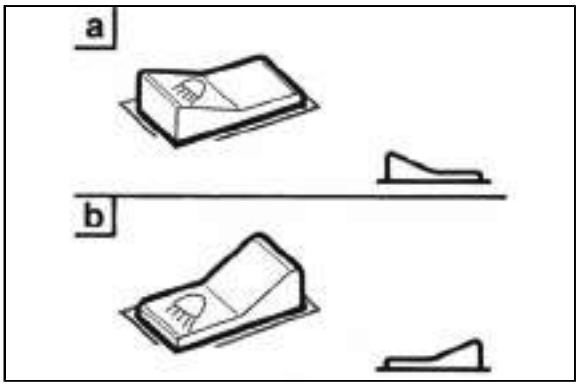

F59

Direction lights, lower beam head lights, head lights and horn switches

a - Acoustic horn - press the switch in the direction of an axis
b - Lower beam head lights
c - Direction lights to the right
d - Direction lights to the left
e - Acoustic horn
f - Lower beam headlights

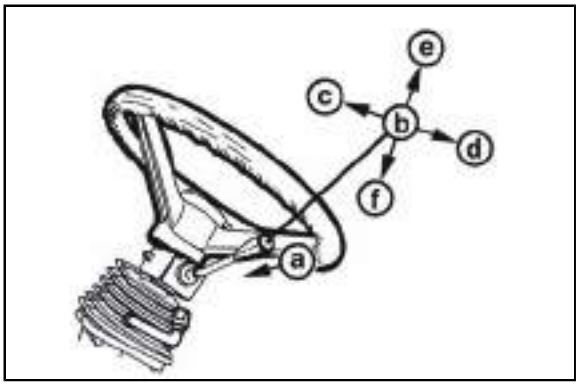

E139a

Front wheel drive switch

Use the front driving axle for increasing the pulling force of the tractor when rear wheels slip.

a - Front driving axle disengaged
b - Front driving axle engaged
Front driving axle is engaged at stopped tractor (braked tractor; stopped engine, switch key is switched-of).
In the basic position, the front driving axle is engaged (indicator lamp is 'ON') and disengaging of the axle is made with the switch (indicator lamp is 'OFF').

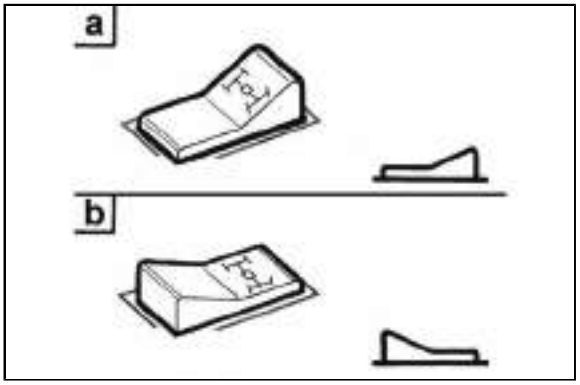

C156

Push button of rear, front differential locks

a - Differential lock disengaged
b - Differential lock engaged
The differential lock is engaged by pressing the differential lock push button that returns into the previous position after loosing.
Illuminating of the symbol on the switch indicates that the differential lock is engaged.
The differential lock is automatically disengaged after pressing the brake pedals.
At tractors equipped with front driving axle equipped with engageable differential lock, this is engaged simultaneously with the rear differential lock engaging.

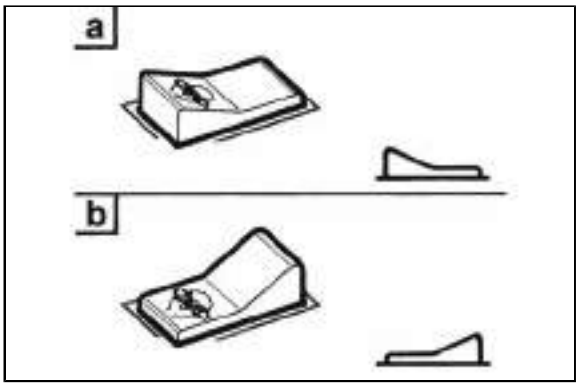

C157

Switch box

Switchbox is placed on the dashboard, see arrow.

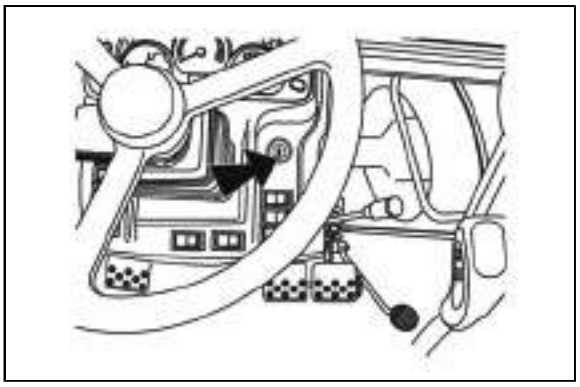

F13BN004

Switch box key in the position (0)
The voltage of all the equipment controlled via the key is disconnected. The key can be removed.

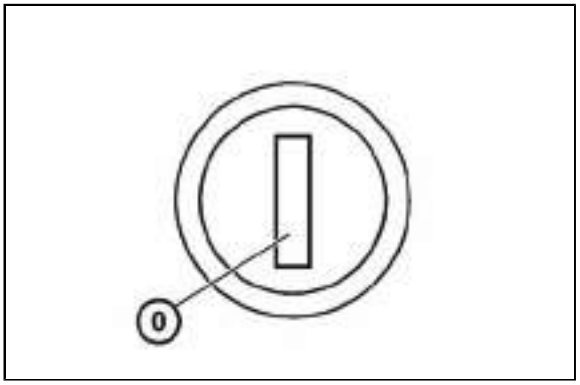

S43

Switch box key in the position (I)
The voltage is connected to all the equipment excluding starter. The key is in this position with the engine running.

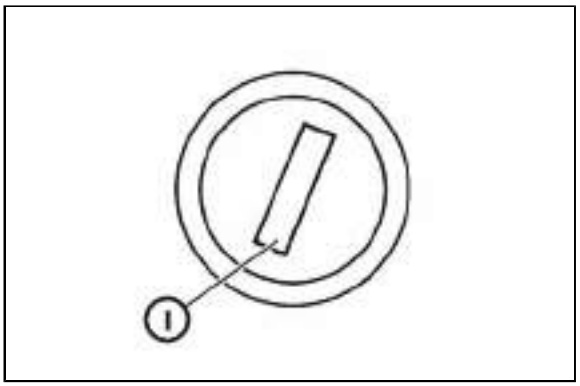

S44

Switch box key in the position (II)
Starter and supply of all equipment is connected in this position apart from wipers, washer, cab ventilator and air condition. After starting, the key automatically returns back to 'I' position.

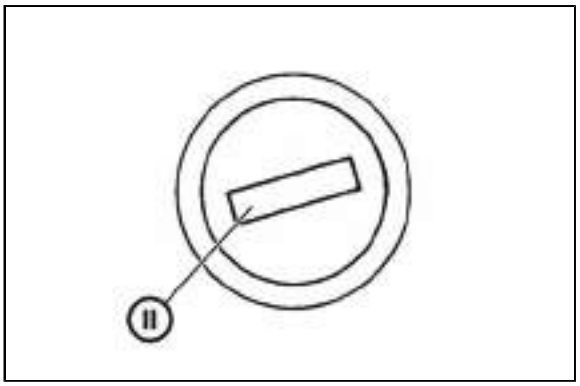

S45

Manual throttle
A - Maximum speed of the engine
B - Idle run
The lever allows setting of speed of the engine within range A to B.

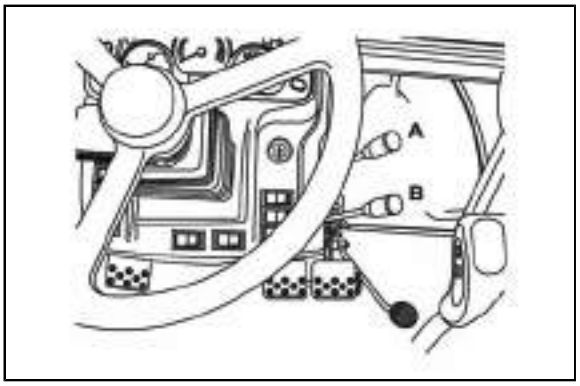

F13BN005

Pedals and levers
1. Travel clutch pedal
2. Foot operated service brake pedals connected by latch
3. Foot throttle pedal

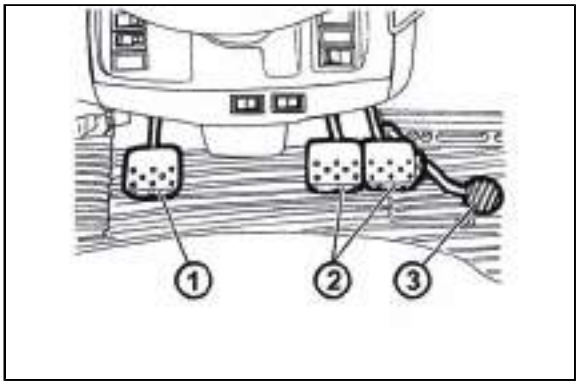

F13BN008

Gear shifting lever
Main gear shifting lever
The handle of the gear shifting lever is red.

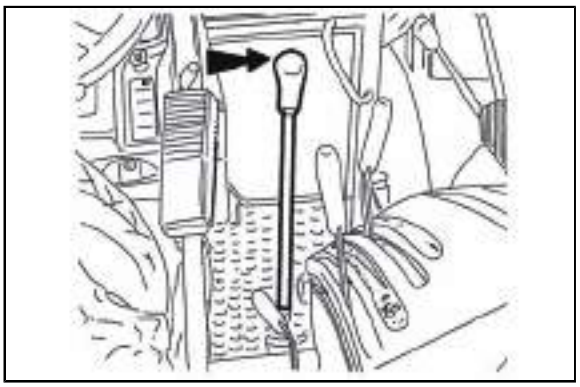

C168

Gear shifting scheme
A - Standard tractor models
B - Tractor equipped with reversor

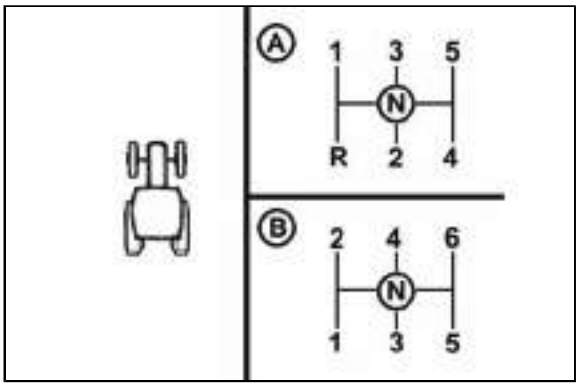

C168a

Reversing lever

F - Forward drive; lever in forward position

R - Backward drive; lever in backward position

Shifting is carried out with tractor in standstill.

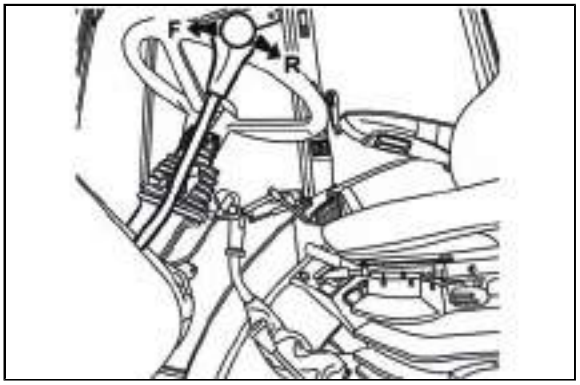

E149B

Road and reduced speeds shifting lever

H Road gears

N Neutral

L Reduced gears

Shifting is carried out with tractor in standstill.

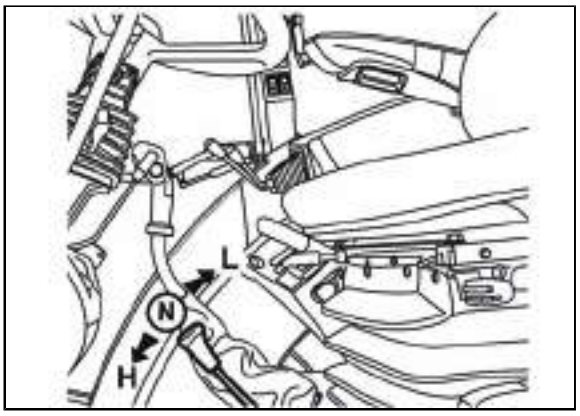

G150

PTO selection control lever

a - Independent speed of PTO shaft - PTO shaft speed depends upon the engine speed

n - Neutral

b - Ground speed of PTO shaft (through gearbox) - PTO shaft speed depends upon the engaged gear speed

Shifting is made when the tractor stops.

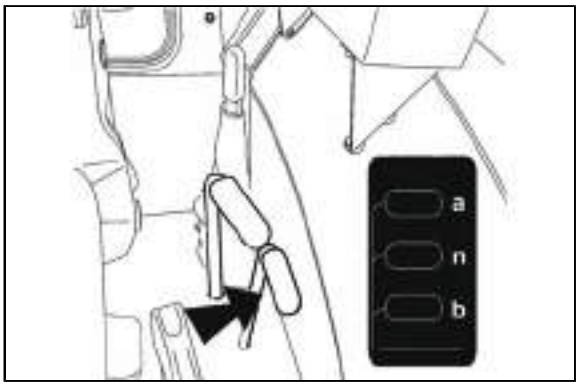

G154

PTO speed control lever

a - 540 rpm

n - Neutral

b - 1000 (540E)rpm

Shifting is made when the tractor stops.

PTO speed shifting of either 540 or 1000 rpm is possible regardless to assembled PTO shaft end (with six or twenty-one splines). PTO speed and the shaft end type must be chosen depending upon prescribed speed of implemented machine.

*Tractor can be equipped with the following changeable PTO shaft ends as option:

six-spline PTO shaft end - 540 rpm

twenty-one-spline PTO shaft end - 1000 rpm.

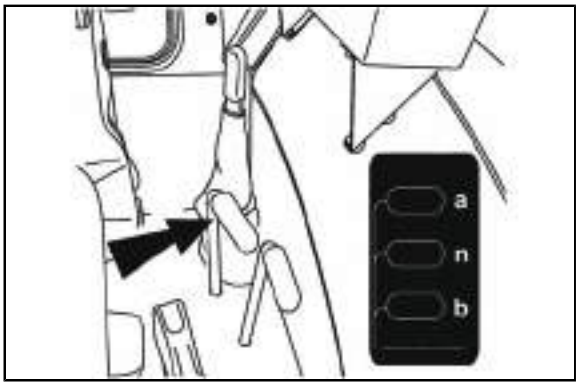

G153a

PTO speed control lever - tractor equipped with reversor or reductor for creeping gears

a - 1000 (540E) rpm
n - Neutral
b - 540 rpm
Shifting is made when the tractor stops.

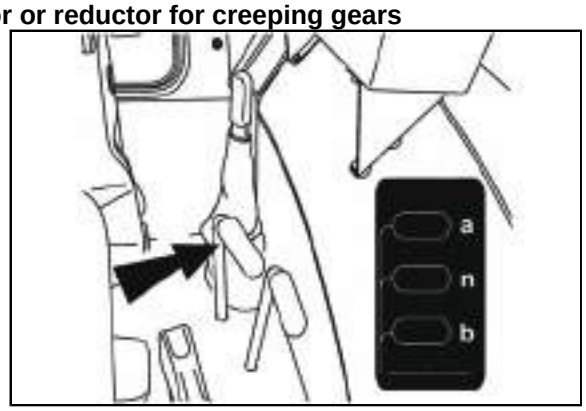

G153a

Switching on the front output shaft Zuidberg

The front output shaft Zuidberg is switched on with a switch on the dashboard. Work of the switch is signalled by burning symbol on the switch.
The switch is equipped with a mechanical lock (1) against accidental switching on. When switching on, press the lock (1) in direction of the arrow.

When starting the engine, the switch should be off.

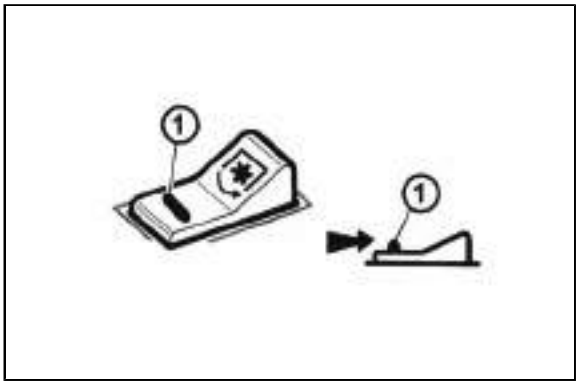

H355

Parking brake lever, pto shaft control lever and pick up hitch control lever

1. Control lever of PTO shaft clutch
2. Parking brake lever
3. Pick up hitch control lever

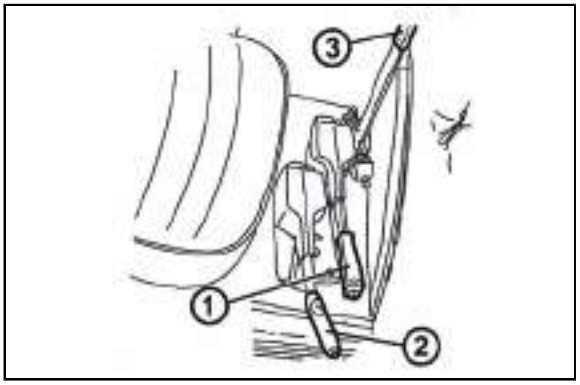

C173

Battery disconnector

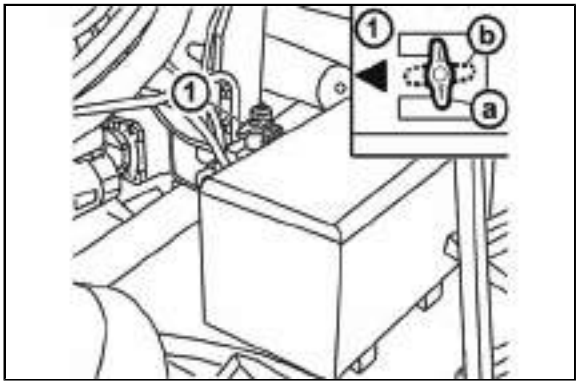

E157

During long-time shutdown, repairs, failure or crash immediately disconnect the battery by means of the battery switch.

Battery switch is located on the left hand tractor side in front of the cab.

A - battery connected

B - battery disconnected

Fuel tank

The fuel tank is fitted at the right-hand tractor side.

A plastic 124-litre tank is installed as standard.

At the customer's request a 150-litre tank may be installed.

E159

Do not step on the fuel tank!

Fuel tank drain plug

Plug for draining dirt and fuel off the fuel tank is in its bottom.

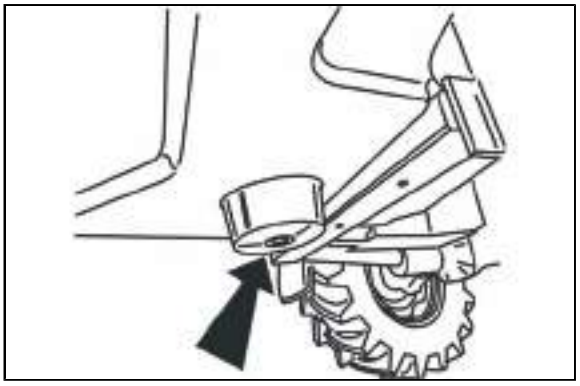

H800

NOTES

Before a drive with the new tractor get to know how to shift gears and try individual positions of the shifting lever when the engine is stopped.
During normal operation and before you set up, make sure that the technical condition ensures safe operation of the tractor.

Starting the engine
1. Insert the key into the key switch ('0' position).
2. Depress the clutch pedal.
3. Move the main shifting lever into neutral position.
4. Move the hand clutch lever into braking position (safety interlock switch will be actuated).

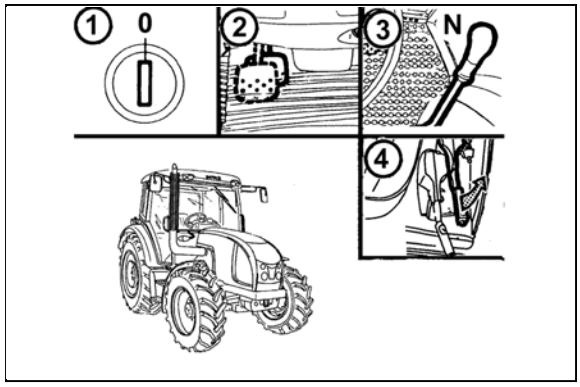

P11NC202a

5. Turn the key from '0' position to 'I' position. The indication lamp of glowing of thermo-start turns 'ON'.
6. Wait until the indication lamp is off. (The time is dependent on coolant temperature).

In case that the indication lamp is only flashing instead of lighting, the glowing system failed (Chapter Signalling of glowing system failures). Let repair the indicated failure in a specialized workshop.
7. Immediately after indication lamp extinction (max. within 5 s) turn the key from the position 'I' into 'II' position (start).
8. Release the key immediately after starting the engine, it returns automatically into 'I' position.
Do not start longer than 15 sec.

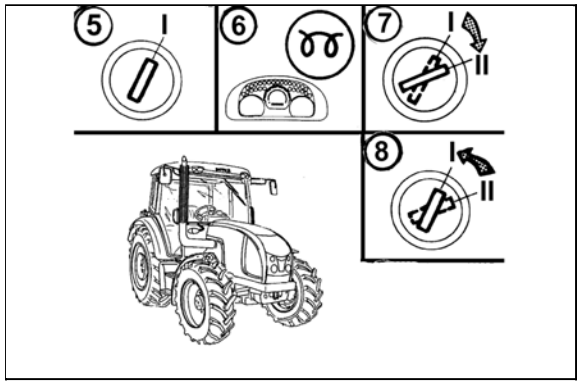

P11NC203a

If engine does not start
Return the key to position '0', wait 30 seconds and repeat the start.
A maximum of 6 starting cycles is allowed (15 seconds start and 30 seconds interruption is one cycle). Another engine start is allowed after the starter cools off to surrounding temperature.

Never help a stopping tractor with a starter. There is a danger of starter damage.

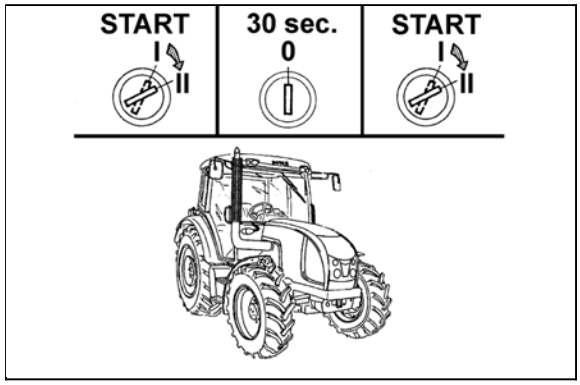

G204

Ignition system failure signalization

Ignition system failure is signalized by ignition control blinking.

- If ignition control is blinking with engine at standstill once in a second, ignition in emergency mode occurs as with low temperatures regardless of the temperature of coolant.
- If ignition control is blinking twice in a second with engine at standstill, ignition is not working.
- If ignition control is blinking permanently with engine running, there is a failure of ignition regulator and ignition has not been completed. Failure must be removed forthwith, since there is the danger of accumulator depletion.

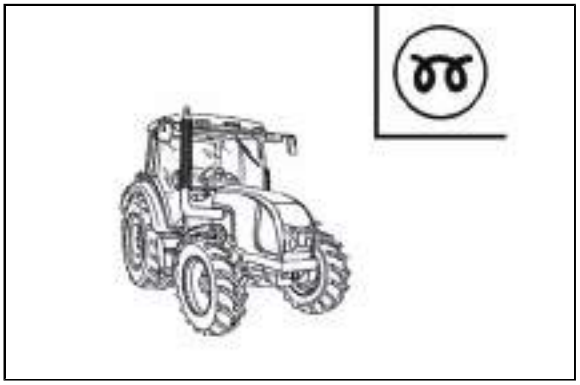

G205

Manipulation with starter

It is forbidden to start by short circuiting starter clamps! Tractor is started only from driver's seat! With any manipulation or starter repair it is necessary to disconnect minus battery pole and all shifting levers including PTO shaft shifting lever must be in neutral position!
Starter contacts are covered with a cap.

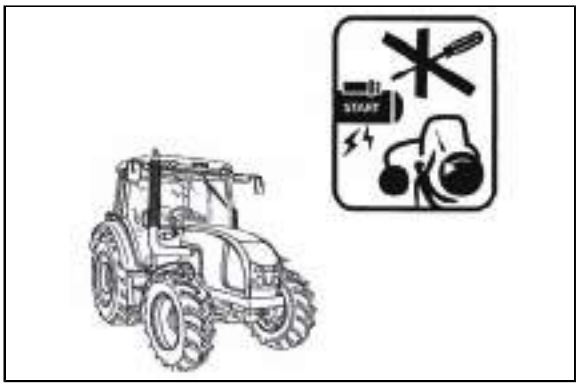

G206

Immediately after start

After starting, set revolutions to 800 - 1,000 rpm and let engine run without load for a period of app. 2 minutes.
Check greasing, charging and other functions ensuring proper engine operation (controls must go out) in this time. The time of engine operation without load must be observed, in particular in winter period.

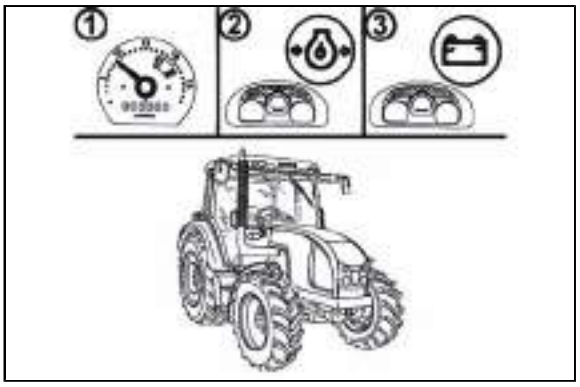

G207

Engine heating

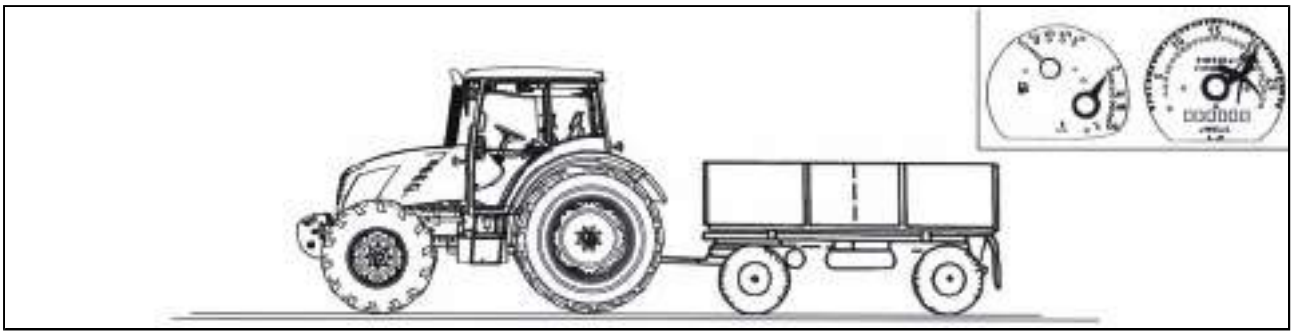

G208

Do further heating of the engine when driving. Heating engine by lengthy idle run or abrupt revolutions increase is harmful to the engine. If the temperature of coolant has not reached 45°C, do not overcome engine revolutions over 2,000 rpm.

***Coolant heater**
Is mounted on the right side of engine block.
output 1,000 W
voltage 220 V

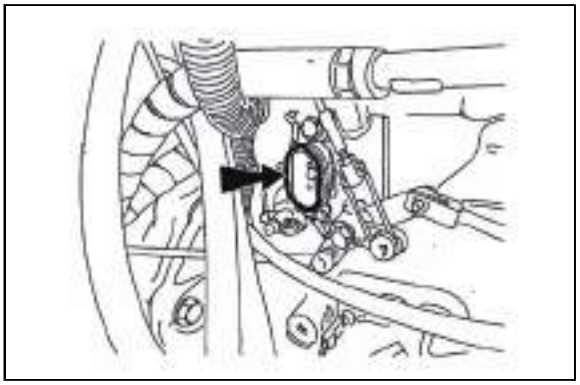

C209

Starting the engine while using coolant heater

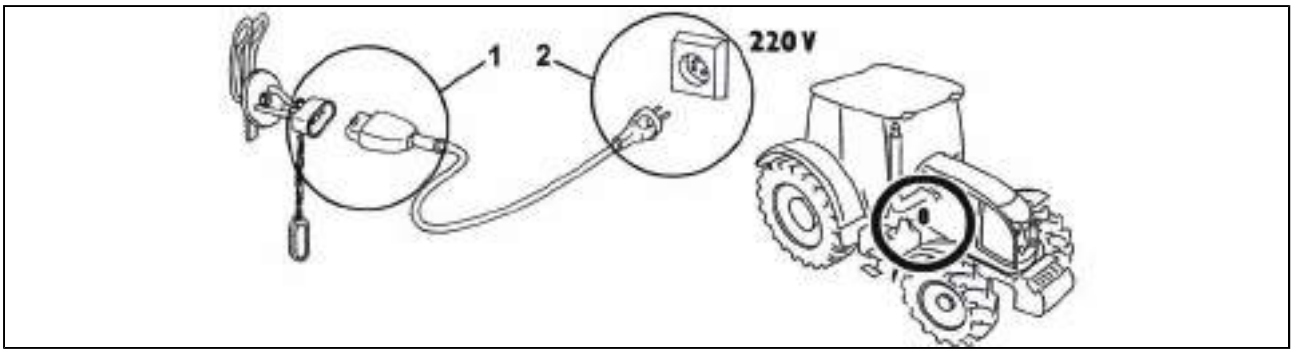

G210a

With low temperatures of the surroundings, engine starting eases heating coolant. Leadin electrical installation and its protection against dangerous contact must be done pursuant to valid regulations
1. First plug the plug to the heater.
2. Then connect heater to electrical network of the voltage of 220 V.
With regard for the lower engine wear with low temperature, the use of heater is recommended by manufacturer. The duration of heating is dependent on the surrounding temperature (1 - 2 hours before the expected start).

After completing the heating, disconnect the device first from electrical network and only then disconnect the plug from the heater! Danger of injury due to electricity!

It is necessary to ensure tractor operator's instruction and regular revision of coolant heater including feeding cable pursuant to valid legislation of the state where the tractor is operated at least prior to each winter period.

Drive away

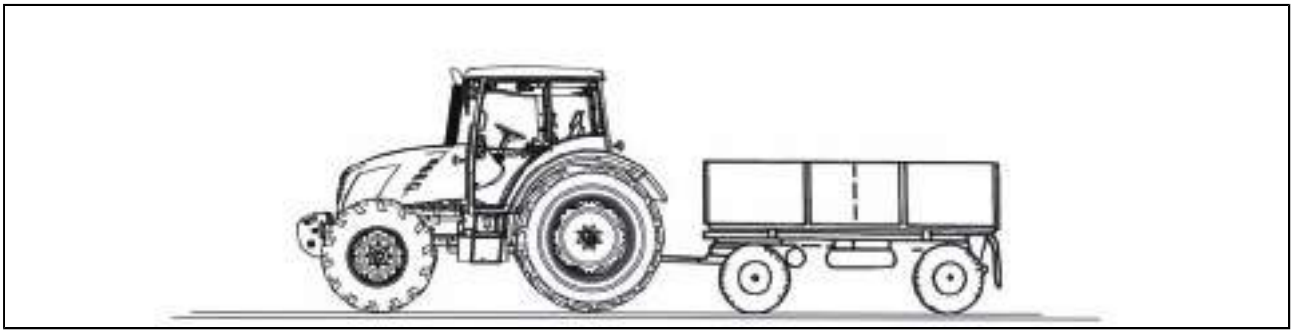

C211

1. Depress the clutch pedal.
2. Shift the main shifting lever to neutral position.
3. Start the engine.
4. Set the engine speed from 800 to 850 r.p.m.
5. Select road or reduced gears.
6. Shift the reversing lever to the tractor's travel direction (to the front or reversing).
7. Engage applicable gear for tractor's start
8. Increase engine revolutions slightly.
9. Prepare manual brake for unbraking.
10. Release the clutch pedal only to the point of travel engagement and with simultaneous increase of engine revolutions continue in smooth release of clutch pedal.
11. Unbrake manual brake completely.
12. Drive away smoothly and slowly.

A very fast drive away may cause overload of driving set, increased fuel consumption, excessive tires wear and load damage. Drive away with 1st gear to be used only when driving with a heavy trailer up the slope and in difficult terrain.

Diesel particle filter

The exhaust system of a tractor is equipped with a diesel particle filter which serves for cleaning exhaust fumes. Solid particles (carbon particles) are collected and burned in diesel particle filter which originate by burning diesel.

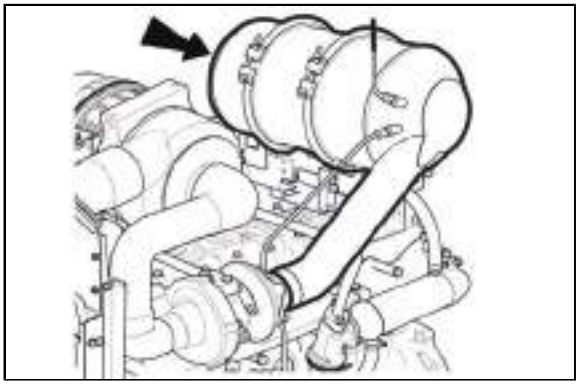

FH12N056

The activity of diesel particle filter is signalized by a pair of controls (green and red) on the dashboard. Diesel particle filter system failures with engine running are signalized by a lit red control on the dashboard and then with an acoustic signal.

A short-term turning on of the red control without a subsequent acoustic signal does not signalize a failure.

The conditions suitable for diesel particle filter regeneration are signalized by a lit green control on the dashboard with engine running. Clogging of diesel particle filter automatically regenerates the exhaust gases temperature with higher engine load.

When operating tractors with engines equipped with diesel particle filter, avoid long-term operation or low engine load.

Diesel particle filter - system failures signalization

Failures in diesel particle system failure are signalized by a red control lighting up on the dashboard with engine running and subsequently by an acoustic signal.
If the failure is not removed, it is signalized with any following starting of the engine
The code of failure us displayed on a display (1) of the displaying unit which is accessible after removing the right cover of the steering console.
The failures are displayed on display (1) in a form of E: double-figured code of failure
For example: **E:36,** number 36 representing the code of failure
If failure is not signalized, operation data of diesel particle filter system are displayed on the display.
The acoustic signal can be turned off by the button (2). If the failure has not been removed, the acoustic signal is active with repeated staring of the engine and can be turned off again by the button (2).
If the key is in switchbox in 'I' position and the engine is not started, approximately ten minutes later the diesel particle filter system starts signalizing a failure. Switch the key to '0' position and start the engine. The code of failure on the display **E:32** or **E:33**.

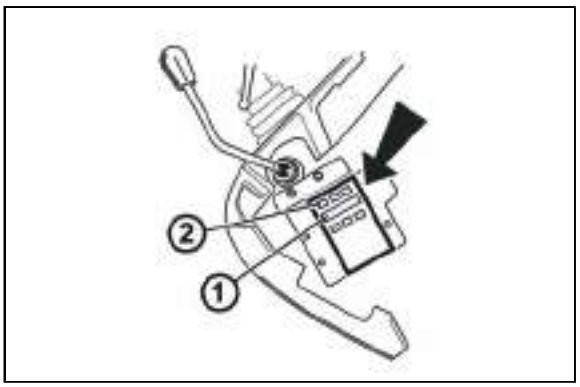

FH12N075

Diesel particle filter failure codes

Failure code E:	Operator´s activity
11, 12, 21, 22, 23, 31, 34, 35, 37, 38, 41, 42, 51, 52, 61, 62	The tractor can be worked without any limitations, after terminating your work, contact authorized service and report the code of failure.
32, 33,	Switch the key to '0' position and start the engine.
36	Regenerate diesel particle filter.

Diesel particle filter regeneration

During the operation of a tractor, diesel particle filter is clogged by solid particles originating in engine run when burning fuel. Clogged diesel particle filter automatically regenerates the temperature of exhaust fumes with higher load of the engine.
When operating the tractor with low load of the engine , e.g. with long-term operation on idle run, there is a partial clogging of diesel particle filter. This condition is signalized with the engine run by a lit red control of diesel particle filter, and followingly also by acoustic signal and on the display of displaying unit of diesel particle filter by failure code
E:36

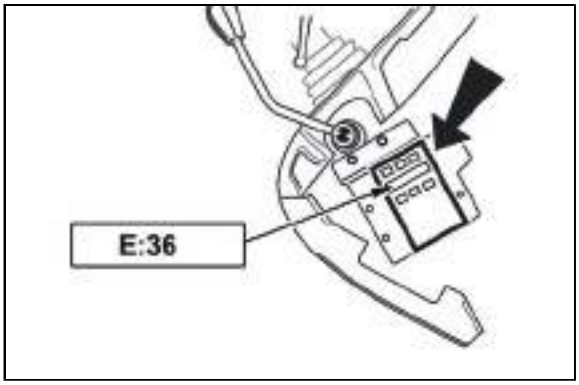

FH12N076

If this situation occurs, increase the load of engine and continue working until red control of diesel particle filter switches off and acoustic signal does not stop.
By increasing the engine load, the temperature of exhaust fumes increases and the solid particles which clog diesel particle filter burn.
The conditions suitable for diesel particle filter regeneration are signalized by a lit green control on the dashboard.
Depending on the temperature of exhaust fumes and the degree of diesel particle filter clogging, regeneration can take up to thirty minutes.

When regeneration is achieved, notification information signalization goes out (error 36). If this signalization does not go out, repeat this procedure. If it still does not go out, you need to address an authorized service.

Increased load of engine shall be work with a tractor at higher engine revolutions (1 800 RPM) with connected tools, power intake via PTO shaft or outer hydraulic circuit.

Shifting road and reduced speeds
H - road speeds
N - neutral
L - reduced speeds

Shifting of gears of the main gearbox with reduced speeds is the same as with road speeds.
Considering low speed of the tractor, change nearly always means moving off from rest.

Shifting using the lever of road and reduced speeds is only possible when the tractor is in standstill.

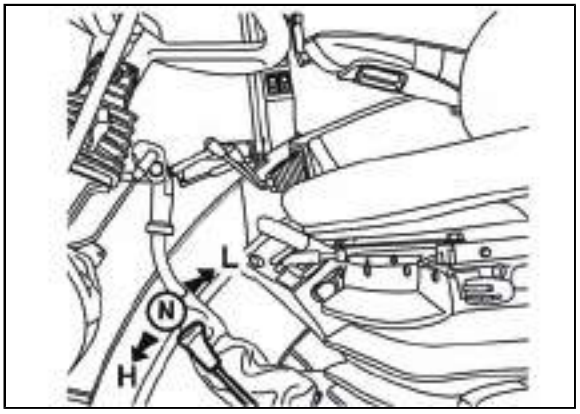

G150

Gear shifting
Gears are changed using the main change lever.

A - Standard type of the tractor
Gears and drive direction are changed using the change lever

B - The tractor is equipped with reversal.
Gears are changed with the main change lever, drive direction is changed with the reversal lever.

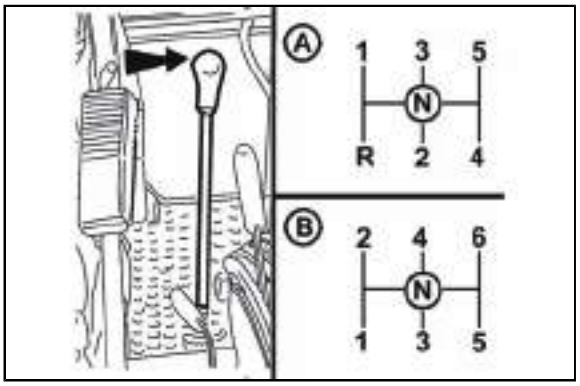

E149a

Reversing lever
F - forward drive; the lever is in the front position
R - backward drive; the lever is in the back position
Change is carried out when the tractor is in rest.

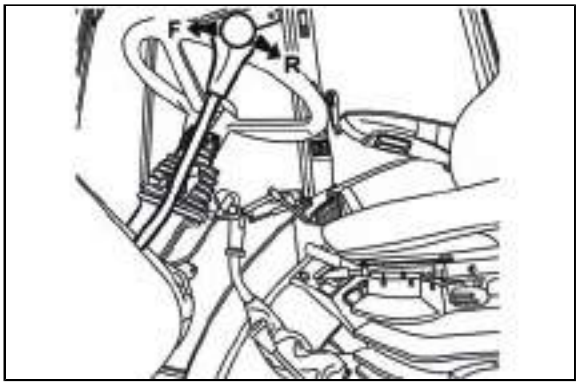

E149B

Gear shifting from lower to higher gears
Depress the clutch pedal (clutch disengaged). At the same time release the pedal of foot fuel control and shift the applicable higher gear. Release the clutch pedal (clutch is engaged) smoothly and at same time increase engine revolutions.

Note: For increasing the life cycle of synchrones, it is possible to shift from higher to lower gear with the socalled double declutching.

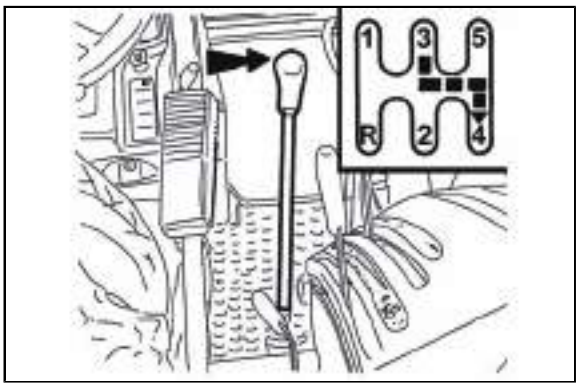

C212

Gear shifting from higher to lower gears
Depress the clutch pedal and shift the gear shifting lever through neutral to lower gear.

Note: For increasing the life cycle of synchrones, it is possible to shift from higher to lower gear with the socalled double declutching.

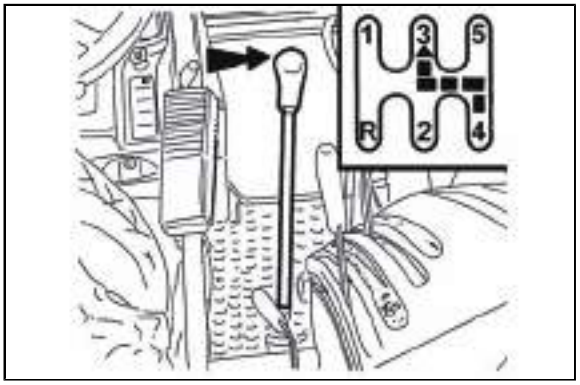

C213

Travelling up the slope

Shift gears from higher to lower gears in time when travelling up the slope so as to avoid drop of engine revolutions under 800 rpm and do not allow ride leading to stopping the engine for overload.

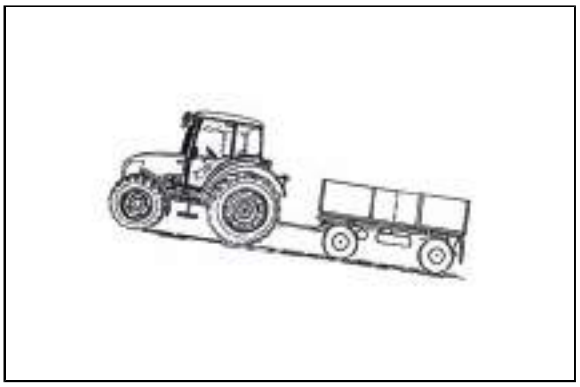

C215

Travelling down the slope

Travelling down the slope without en engaged gear is forbidden. If you are going down a longer slope engage the lower gear the steeper the slope. Engage the lower gear before the slope if possible.

Note: The gear with which you will reliably overcome ascension, it is the one with which you will safely go down.

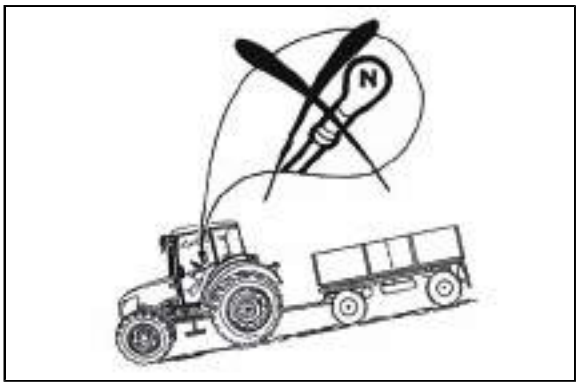

C216

Differential lock

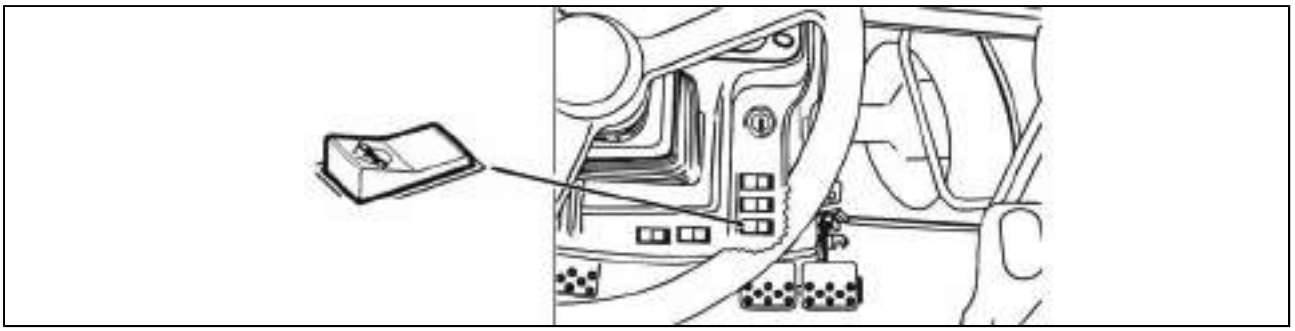

The differential can be locked by pressing a switch that returns back to its original position after it is released.

Locking of the differential is indicated by an illuminated symbol on the switch.
Depressing of the brake pedals unlocks automatically the differential.

Do not use the differential lock when driving through road bends.

Control of front driving axle

The front driving axle is engaged in the basic position.
Engagement of the front driving axle is indicated by an illuminated symbol on the switch.
It can be disengaged using a switch on the dashboard.

a - Front driving axle engaged
b - Front driving axle disengaged
At the stopped tractor, the front driving axle is engaged at stopped tractor (braked tractor, stopped engine, key switch in '0' position).

In case of a drop of air pressure in the compressed air system of the tractor the front driving axle is engaged automatically.

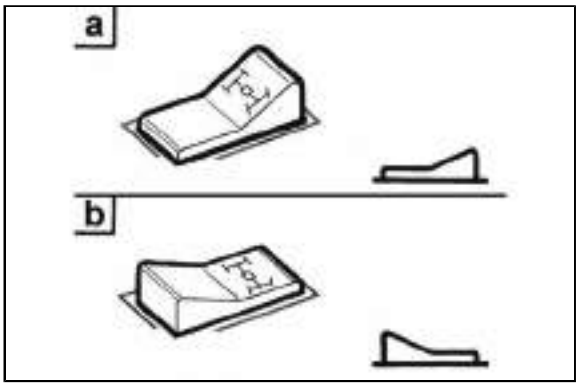

C219

Driving with engaged front driving axle

Use the front driving axle with slipping of the rear wheels to increase the traction force of the tractor. It is permitted to engage the front driving axle on roads and hard surfaces up to 15 km/h (travel with engaged front driving axle causes increased wearing of front tyres).

Permanent engagement of the front driving axle is permitted if there is a farming mechanism attached to the front suspension. This condition is mentioned in the instructions manual to the respective mechanism. Maximum permitted speed when driving with these attachments is 15 km/h.

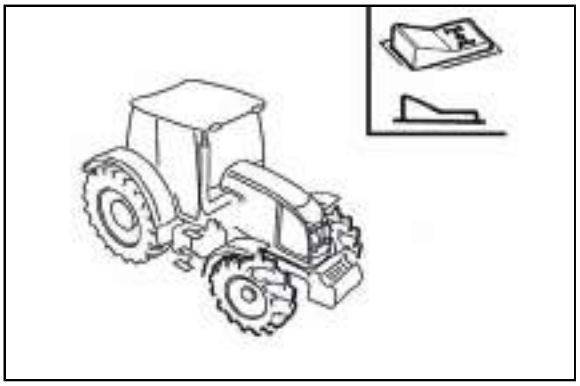

P11NC220

Foot brakes
The foot brakes are disk wet type, hydraulic-controlled, with two pedals and automatic pressure balancer.

During travel both pedal have to be coupled with a latch. Use uncoupled pedals for barking of the right or left wheel only when working in terrain and on a field at low travel speeds.

Note: When driving from a steep downslope with a trailer or semi-trailer equipped with air or hydraulic brakes it is necessary to start braking by foot brake already from beginning of the slope!

With braking by one brake pedal the trailer brakes are not activated!

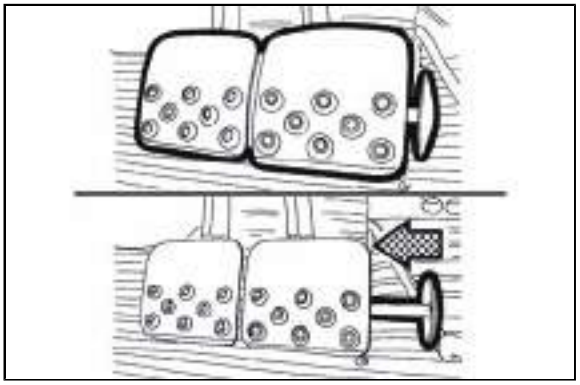

C221

Air brakes of trailers and semi-trailers
Air brakes of trailers (semi-trailers) and brakes of the tractor are designed so that braking effects of both vehicles are synchronised.

In case of a drop of pressure the transfer valve disables the secondary consumers (differential lock, disengagement of the front driving axle).
When driving with a trailer or semi-trailer the foot brake pedals shall be coupled and secured by a latch!
With braking by one brake pedal the trailer air brakes are not activated.

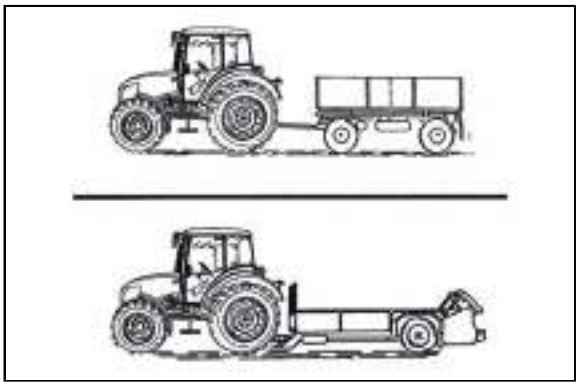

C222

Warning indication of air pressure drop
Decrease of air pressure under 450 kPa is indicated by a red lamp and red symbol of a tractor with a sign STOP on the dashboard.

In case of a pressure drop in the compressed air system under 450 kPa the tractor with braked trailer or semi-trailer may not travel until air pressure increases.

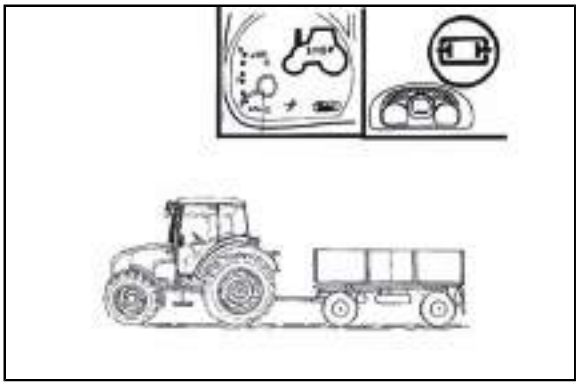

G226

One-hose and two-hose brakes
1. clutch head of one-hose brakes
2. clutch heads of two-hose brakes

Clutch heads after disconnection or without a connected trailer, articulated trailer must be closed by a valve.

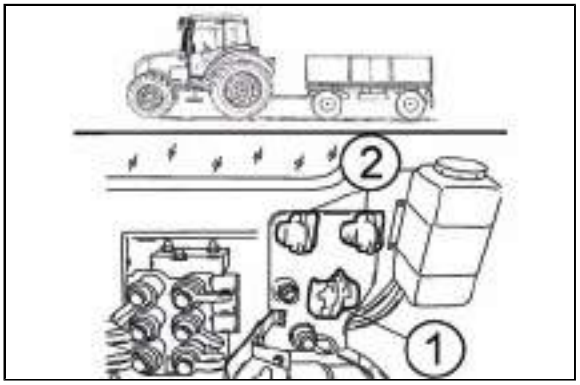

P11NX227

One-hose brakes
Valve is marked with a black colour.
Operating pressure is adjusted with the control valve at 600 ± 20 kPa.

When connecting the trailer (articulated trailer) with a maximum allowed weight approved for the type of tractor at stake is a maximum allowed speed of the set of 30 km per hour! Maximum allowed speed of the set is defined by maximum allowed speed of the slower vehicle of the set.

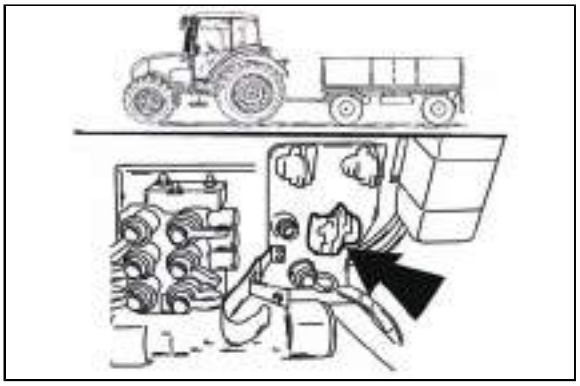

P11NX228

Two-hose brakes
Operating pressure is adjusted with the control valve at 740 ± 20 kPa. Capacity of air tank is 20 l.
The valve of the left head is labelled in yellow (braking branch), the valve of the right head is labelled in red (filling branch).

When connecting the trailer (articulated trailer) with a maximum permitted speed approved for the type of tractor, the maximum permitted speed of set is 40 km per hour!
Maximum permitted speed of set is given by maximum permitted speed of the slower vehicle of the set.

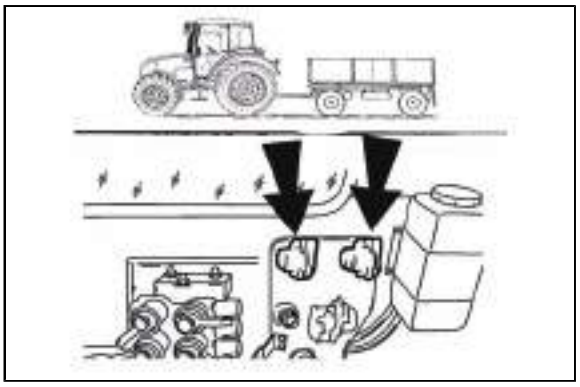

P11NX229

Hydraulic brakes of trailers

Connect hydraulic brakes of trailer or articulated trailer to the quick couplings marked by an arrow.
Control of hydraulic brakes of trailers (articulated trailers) and control of tractor brakes is done so that the braking effect of both vehicles is synchronized. Working pressure is derived by oil supplied by non-switched on/switched off gear pump of hydraulics. Brake valve of the trailer is done by the pressure of brake fluid from main braking rollers depending on the force effecting on the brake pedal. The pressure on clutch head must be 12 - 15 MPa with maximum depression of brake pedal. Brake valve of trailer prefers the function of brakes to the function of hydraulics. If there are shocks when foot brake pedals are depressed in the pipeline of hydraulic circuit, it is necessary to bleed the hose from the brake valve to the quick coupling.

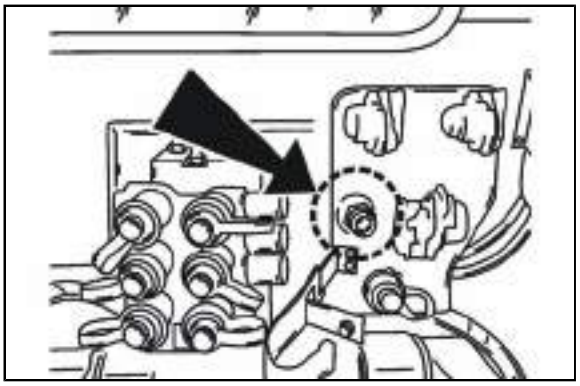

P11NE231

When driving with connected trailer or articulated trailer, the pedals of foot brake must be connected and secured by a valve! When braking with one brake pedal, hydraulic brakes of the trailer are not active.

Connecting and disconnecting quick couplings of trailer hydraulic brakes

When connecting and disconnecting quick couplings, take increased care with regard for remaining oil which remains in the socket or in the plug of quick coupling. For ecological reasons, it is necessary to remove this remaining oil after every disconnection of quick couplings with any textile material.

Stopping the tractor - manual brake
Under normal conditions stop the tractor slowly. Shortly before stopping:

1. Tread on the clutch pedal and brake the tractor by the foot brake.
2. Move the main shifting lever to neutral position.
3. With each stop secure the tractor using the hand brake against spontaneous moving off. Application of the hand brake is indicated by a light on the dashboard.

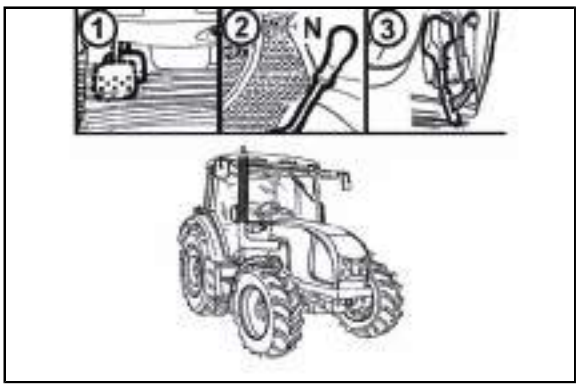

G232

Stopping the engine
After operation of the tractor when the engine was fully loaded the engine must be cooled.

1. When the engine is started, leave it idling without load for ca. 5 minutes.
2. Move the manual regulation lever to the idling position.
3. When the key is turned from 'I' position to '0' position, the engine is stopped.

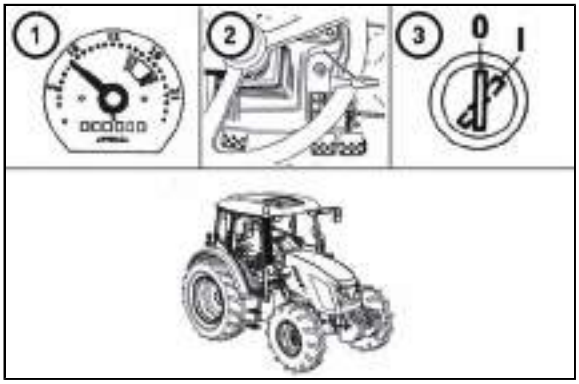

Leaving the tractor
Before you leave the tractor with safety cabin, do not forget remove the key in position '0' from the ignition box (in positions I and II the key cannot be pulled out).

The tractor shall be secured against spontaneous moving off:
1. ***Engine switched off.***
2. ***1st gear engaged.***
3. ***Hand brake applied.***

In case that the tractor is standing on a slope, its wheels shall be wedged.
Lock the cabin.

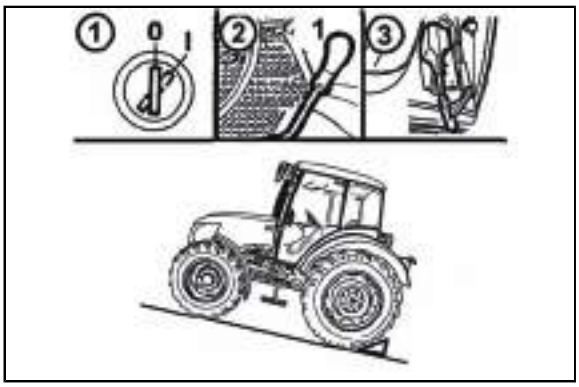

C230

Note: *When* the engine is stopped, the front driving axle is engaged automatically.

Warning signalization of hydrostatic steering failure
Hydrostatic steering pump failure is with oil pressure drop under 120 kPa behind a pump signalized on a dashboard by an applicable symbol.

Note: When starting the tractor or with low engine revolutions, the control may blink, if it switches off after starting or increasing the revolutions, it is not a failure.

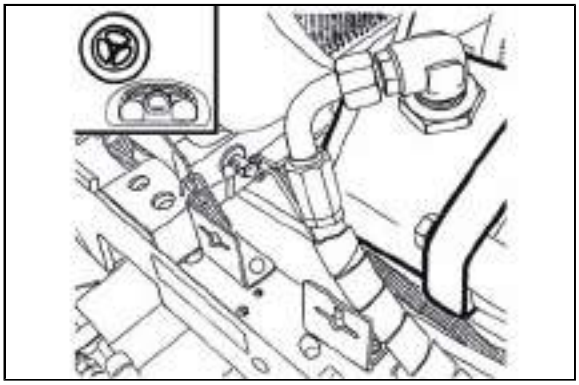

F_02_68

Important warnings
In case that indicator of lubrication, battery recharge or a fault of the hydrostatic steering is on during normal operation of the tractor, stop the tractor immediately, stop the engine and contact a specialised repair shop. This prevents a serious damage or breakdown of the tractor.

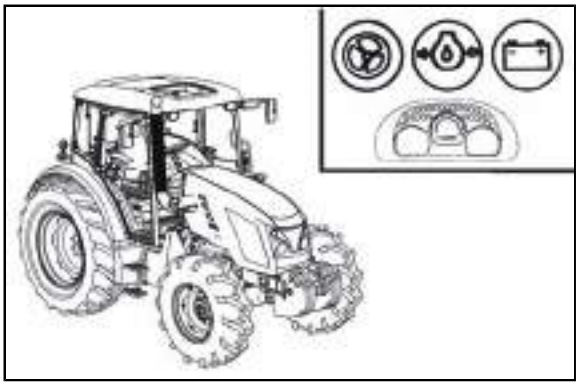

G238a

NOTES

RUNNING-IN THE TRACTOR

General principles of new tractor run-in in first 100 hours of operation

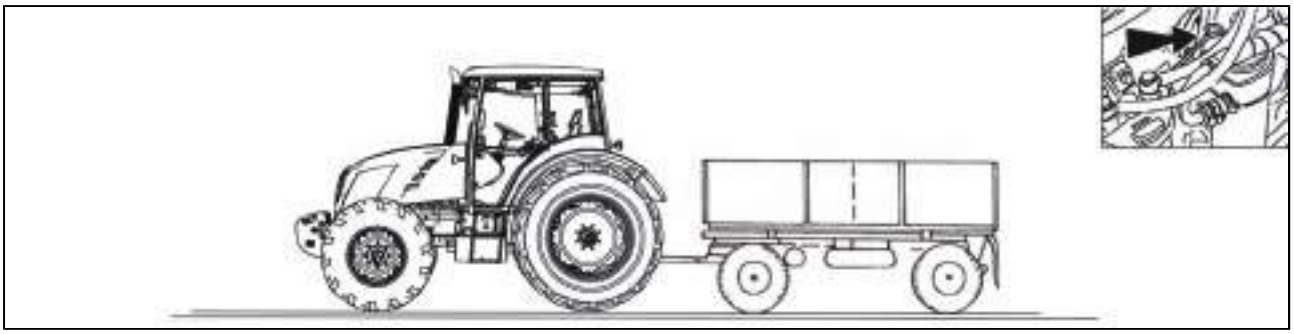

G251

During first 100 hours of operation:

- Load tractor in a normal way, avoid operation with low or maximum engine revolutions
- Avoid operation under partial loading of the engine
- Avoid excessive idle run operation
- Check oil levels in engine often (during this time increased oil consumption is normal)
- Check screw joints in particular in supporting parts of tractor
- Learned insufficiencies to be removed immediately, you will thus prevent subsequent damage or endangered operation
- Keep the same procedure also after tractor complete overhaul

In first 10 hours of operation

- perform run-in in traffic
- tighten fastening nuts of front and rear wheels including connectionbead / rim with prescribed torque

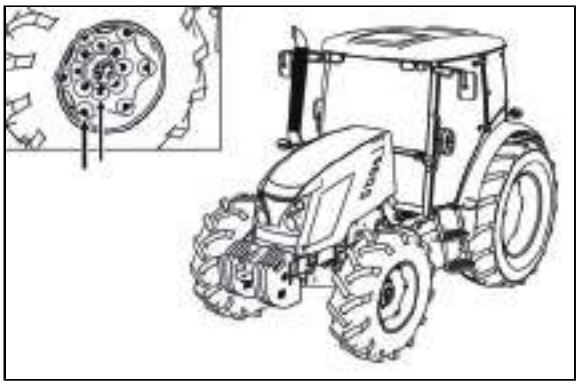

G252

From 100 hours of operation

After drive in completion you can work with tractor without limitations.

Recommended operation revolutions	1,400 - 2,300 rpm
Idle run revolutions	800 ± 25 rpm
Operation oil pressure	0.2 - 0.5 MPa
Oil pressure with idle run revolutions	min. 0.05 MPa
Max. coolant temperature	106°C

E256

NOTES

TRANSPORT USE

Before a drive make sure that the technical condition ensures safe operation of the tractor. In case that a trailer or implement is coupled, verify its coupling and proper fixing of the load. Never get out of the tractor to couple a trailer yourself. Pay also attention to your assistant.

Front hook

Used only for towing tractor without connected trailer or a different connected machinery.

Use a drawbar or a cable for releasing tractor. Never use chains! The possibility of fatal injury if a chain pulls apart!
It is forbidden to use tractor axles (individual travelling wheels) such as reeling jack when rescuing a sunken tractor.

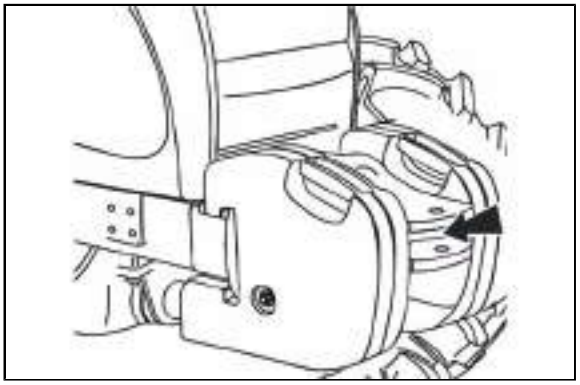

NM13N023

Multistage adjustable suspension

Serves for connecting double axle or lighter single-axle trailers. Guidance nozzle is vertically adjustable. When working with various agricultural machines it is necessary to adjust the suspension vertically or demount where necessary.

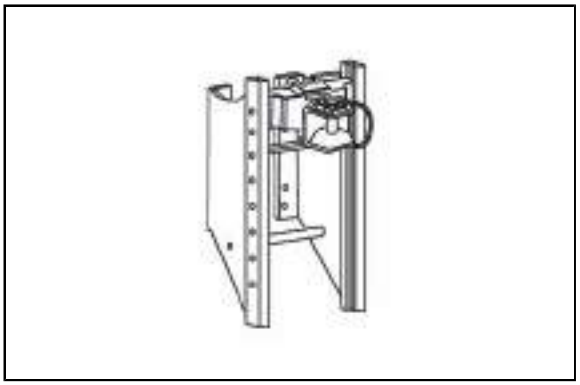

E302

Height adjustment and disassembly of the CBM stage hitch

By moving the control lever in the arrow direction to position (1) you will release the lever and by moving it subsequently to position (2) you will retract the locking pins (3). Now, the stage hitch is released and you can adjust its height or disassemble it. When you release the lever from position (2), the locking pins (3) will extend and the lever will automatically return to the initial position.

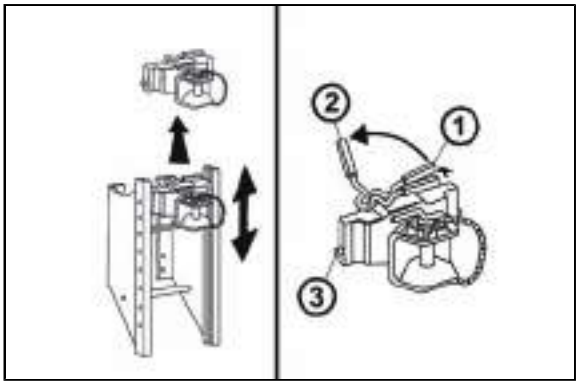

D202

Automatic mouth of the CBM stage hitch

When the lever (1) is moved in the direction of the arrow (a), the pin (2) is retracted to the upper position, which is signalled by the extended indicator (3), see fig. (A). When the mouth gets onto the shaft lug, the pin will automatically slide into the lug of the connected trailer. You can lower the hitch pin (2) manually by moving the lever (1) in the arrow (b) direction. The insertion of the pin is signalled by the retracted indicator (3), see fig. (B).

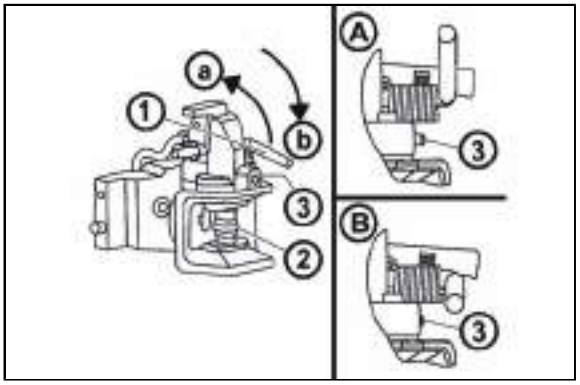

E304

After the attachment of the trailer you must always check whether the indicator (3) is retracted in accordance with fig. (B).

Modular system of hitches for trailers and semi-trailers

Module types:
Fig. (B) - Swinging draw-bar console
Fig. (C) - Swinging draw-bar console with a fixed pin
Fig. (D) - Console with a ø 80 ball

Disassembly, fig. (A):
1 - Remove the locking screw (1).
2 - Secure the module against sinking, release and disassemble the pins (2).
3 - Slide the module out of the console downwards.

Do the assembly in the reverse order.

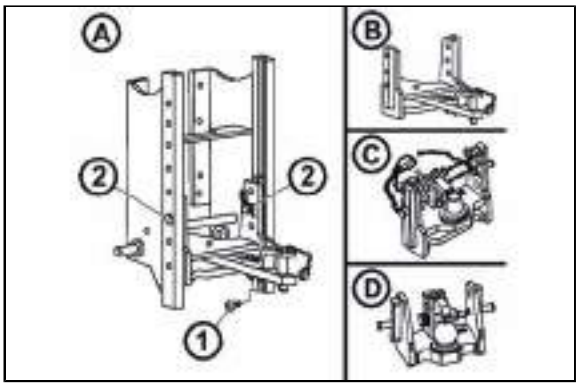

D204

Swinging draw-bar console module

The swinging draw-bar console module is located in the stage hitch console.

Swinging draw-bar

Disassembly:
1 - Release and remove the pins (1).
2 - Slide the swinging draw-bar out in the arrow direction.

Do the assembly in the reverse order.

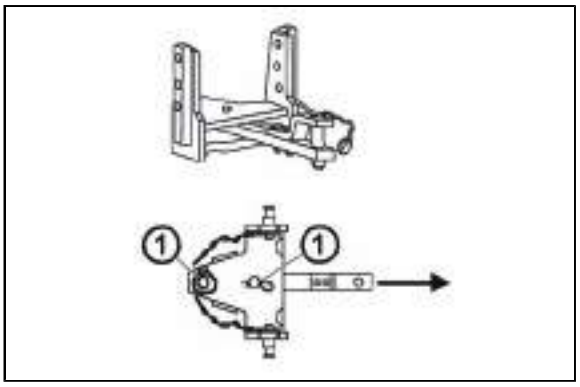

D205

Swinging draw-bar console with a fixed pin module

Perform the assembly and disassembly of the swinging draw-bar in accordance with the 'Swinging draw-bar' chapter.
Connecting the shaft lug to the fixed pin (3):
1 - Release and remove the pin (1).
2 - Lift the locking wedge (2) in the arrow direction.
3 - Connect the shaft lug to the fixed pin (3):
4 - Return the locking wedge (2) to the original position and secure it with the pin (1).

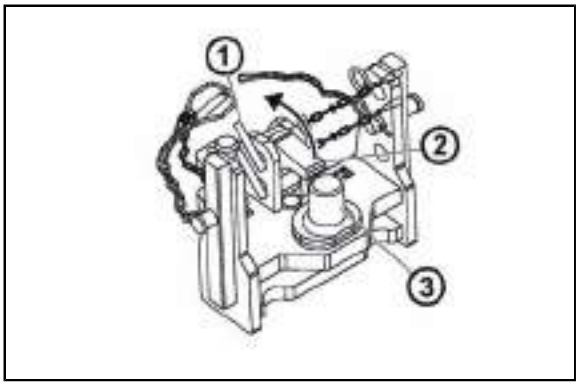

D206

Console with a ø 80 ball module

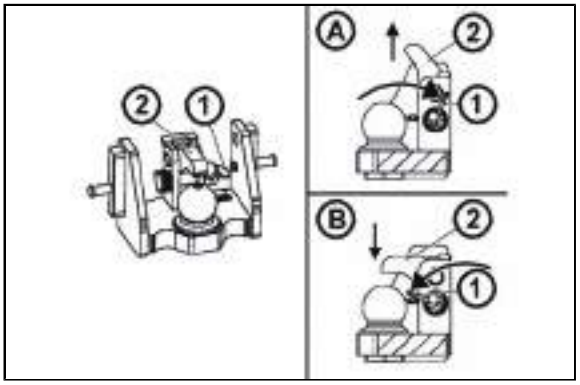

D207

The console with a ø 80 ball is only used to connect semi-trailers with a hitching device designed for a ø 80 ball.

Releasing the hitch, fig. (A):
By moving the lever (1) in the arrow direction you will remove the locking wedge (2).
Locking the hitch, fig. (B):
By moving the lever (1) in the arrow direction you will retract the locking wedge (2).

Towing bar

Height of the towing bar can be adjusted within entire extent of the adjustable height.
Only those farming mechanisms can be attached to the towing bar that load it permanently downwards.

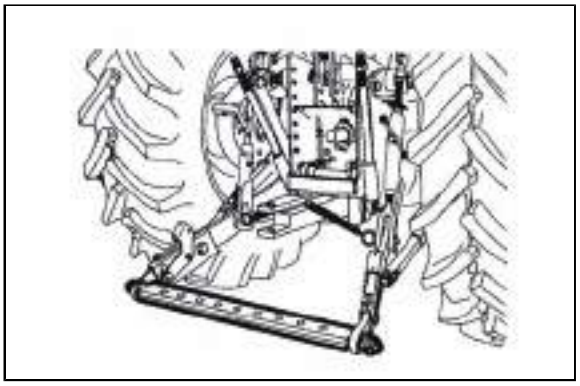

E312

When working with the towing bar dismount the multi-level hitch and pivoted pull bar.

Hitch for a single-axle CBM semi-trailer

The hitch for a single-axle trailer can be equipped with a hook (A) that is designed for coupling of single-axle trailers having poles according to the standard ISO 5692 (inner diameter of the eye 50 mm and height of the eye 30 mm) or pivoted pull bar (B).
The coupling hook is lowered and lifted hydraulically using length-adjustable telescopic pull rods.

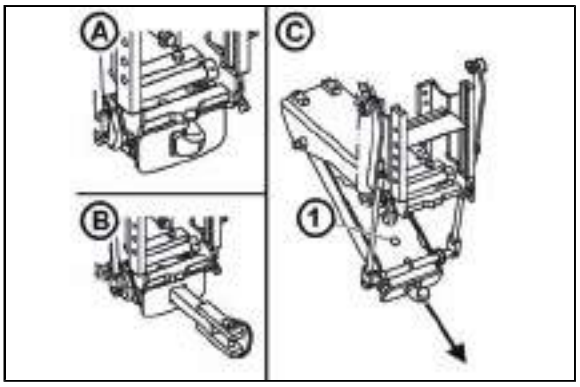

D208

Replacement of the hook for the pivoted pull bar (C):

1. Lower the hitch.
2. Unlock and remove the pin (1).
3. Remove the hook in direction of the arrow.

The pivoted pull bar is mounted in reverse order.

Coupling of a single-axle trailer

Coupling can be performed using the hydraulic circuit lever (2). The hitch hook with the trailer pole eye is lifted hydraulically to the position where the supporting hooks click under pins of the hitch carrier.
The lifting arms of the hydraulic device then shall be lowered to lock the supporting hooks onto the carrier pins; the telescopic pull rods shall not be under any tension.

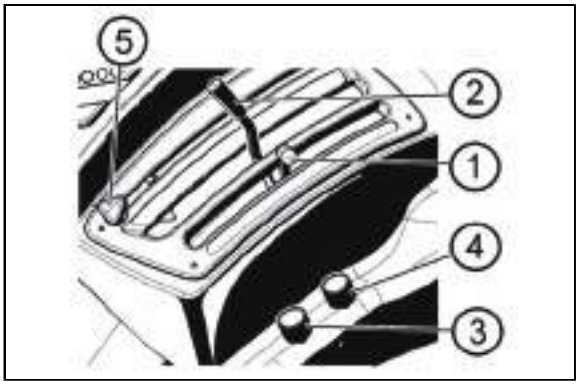

P+11N003

Uncoupling of a single-axle trailer

This can be performed after slight lifting of the hitch by the inner hydraulic circuit lever.
Move the control lever backwards.
The lever is located on the left side of the driver's seat.
Lower the hitch using the inner hydraulic circuit lever and disconnect the trailer pole eye.

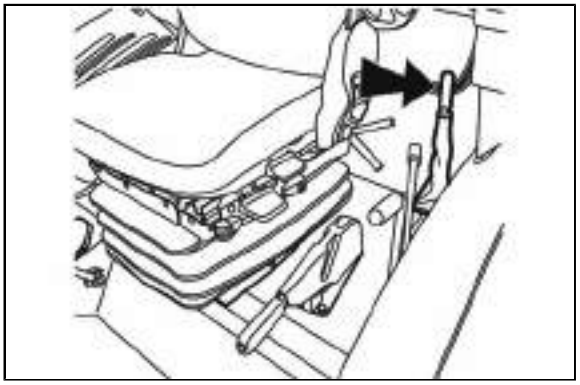

E311

Hook of the mounting for a single-axle trailer

The hook of the mounting for a single-axle trailer is located in the bracket on the left-hand side of the cabin back wall.

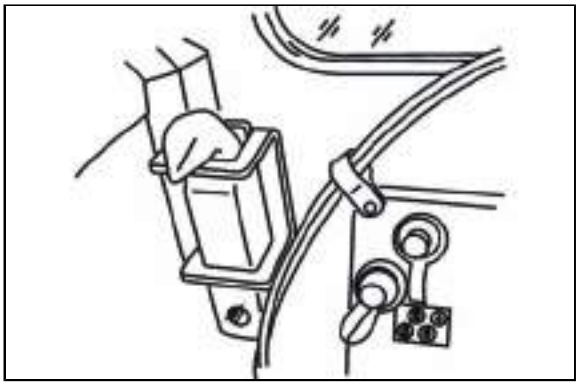

G313

Coupling with a trailer or semi-trailer

The tractor can be coupled only with a tractor trailer after matching of operating brakes of the tractor and pneumatic or hydraulic brakes of the trailer.
In case of coupling with a semi-trailer the static loading of the rear axle of the tractor may not exceed the maximum permitted value.

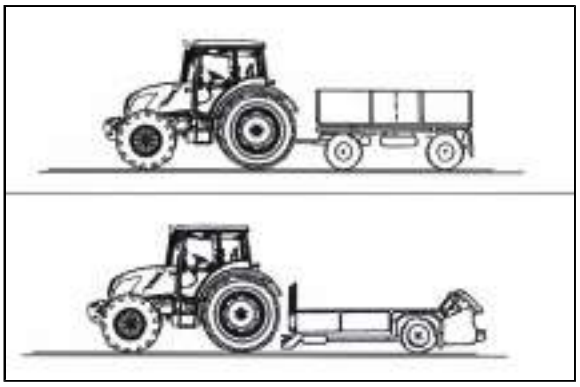

G900a

TRANSPORT USE

Maximum permissible vertical static load of hitches for trailers and semi-trailers

Hitch type	Permissible vertical static load	Hitch pin Ø	Hitch type	Permissible vertical static load	Hitch pin Ø
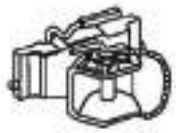	2 000 kg	31 mm		2 000 kg	38 mm
Hitch class D2			Hitch class C		
	2 000 kg	43 mm		2 000 kg	28 mm

The maximum weight of an aggregated braked trailer or semi-trailer must not exceed the value specified on the data plate of the tractor and the value specified in the technical certificate of the tractor. The maximum permissible speed of the set results from the maximum permissible speed of the slower vehicle in the set.
Hitch of class C: max. weight of the trailer 6,000kg.
Hitch of class D2: max. weight of the trailer 14,000kg.
Hitch of class D3: max. weight of the trailer 20,000kg.

Hitch type	Permissible vertical static load	Hitch pin (ball) Ø	Hitch type	Hitch pin (ball) Ø	Ø čepu (koule) závěsu
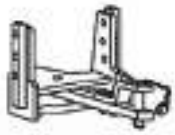	736 kg	31 mm		2 000 kg	80 mm
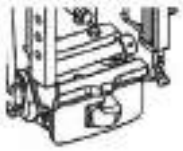	3 000 kg	47 mm		1 200 kg	31 mm
	Fixed pin 2,000 kg	44,5 mm			

The maximum weight of an aggregated braked trailer or semi-trailer must not exceed the value specified on the data plate of the tractor and the value specified in the technical certificate of the traktor. The maximum permissible speed of the set results from the maximum permissible speed of the slower vehicle in the set.

NOTES

PTO DRIVE OF AGRICULTURAL MACHINES

Before attaching of an implement, driven by means of the tractor PTO shaft, check the speed compatibility of both, it means tractor PTO shaft and implement driven shaft (540 rpm or 1,000 rpm). Different PTO speed values may cause serious damages and injuries.

Work with PTO shaft

1. When working with the output shaft pay attention to proper fixing of all covers.
2. After completion of work install always the output shaft cover.
3. Connect and disconnect the articulated shaft of the coupled mechanism to the rear output shaft of the tractor always when the engine is stopped, output shaft disengaged and lever of shifting of dependent and independent rpm of the output shaft in position 'N' - neutral!
4. Connect and disconnect the articulated shaft of the coupled mechanism to the front output shaft of the tractor always when the engine is stopped and output shaft disengaged!
5. Perform any repairs or cleaning of parts of the coupled mechanisms driven by the output shaft only when the engine is stopped, output shaft disengaged and lever of shifting of dependent and independent rpm of the output shaft in position 'N' - neutral.

Hand control lever of PTO shaft clutch

With rising of the hand control lever of the PTO clutch into the upper position it comes to disengaging of the PTO clutch. The upper position of lever is indicated with indicator light located in the dashboard. The lever is automatically locked in the upper position with a latch. Releasing of locking and return of the lever into the lower position is possible after rising the lever and depressing the push-button at the front of the lever.
Upper position - clutch is disengaged
Lower position - clutch is engaged

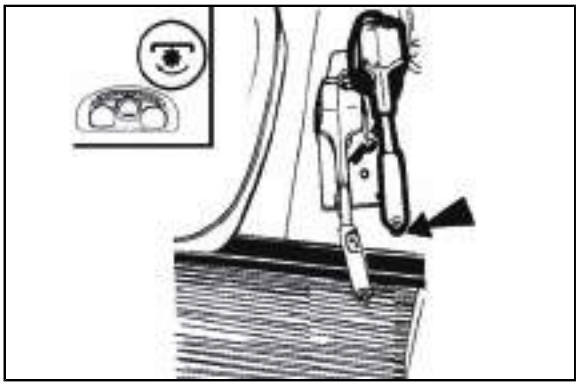

C352a

Hand control lever of PTO shaft clutch with pneumatic control

As option, the tractor can be equipped with disengaging of the PTO clutch with pneumatic control. The function of the hand control lever of the PTO clutch is same as standard tractor model. At air pressure of min. 500 kPa, it is possible, by depressing of the clutch pedal, to disengage the PTO clutch simultaneously with the travel clutch.

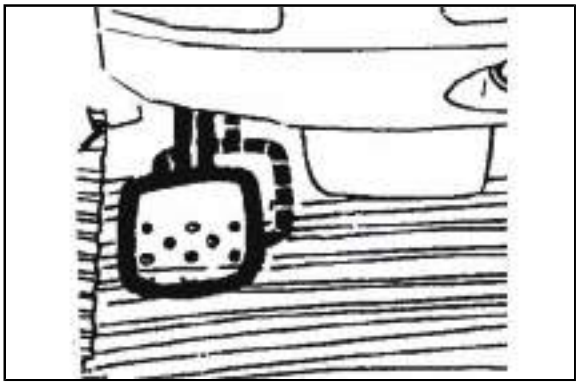

C353a

Replaceable end points of rear PTO shaft

The tractor is equipped with six or twenty-one splined replaceable end point of rear PTO shaft.
Replacement procedure:
1. Use safety ring pliers to demount a safety ring (1)
2. Remove replaceable end point by pulling in the direction of an arrow (2)
3. Mount the end point in an opposite way, pay increased attention to the mounting of the safety ring (1)

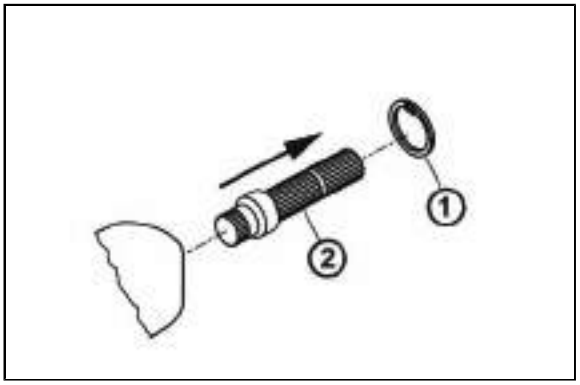

E357

Replacement of the terminal shall be performed when the engine is stopped.
Rpm of the output shaft and terminal type shall be chosen depending on the prescribed rpm of the coupled mechanism.
Shifting 540 and 1,000 or 540E min^{-1} is possible regardless to the number of splines of the installed terminal.

Rear output shaft - shifting of dependent and independent speed of the shaft

Shifting is performed by the lever (1) when the tractor is in standstill.

a - Independent speed of the output shaft (rpm of the shaft depends on rpm of the engine).
n - Neutral position. Use this position to facilitate connection of the farming mechanism propeller shaft. The terminal of the rear output shaft is freely rotable.
b - Dependent speed of the output shaft (rpm and direction of rotation depends on the engaged gear and position of reversing lever).

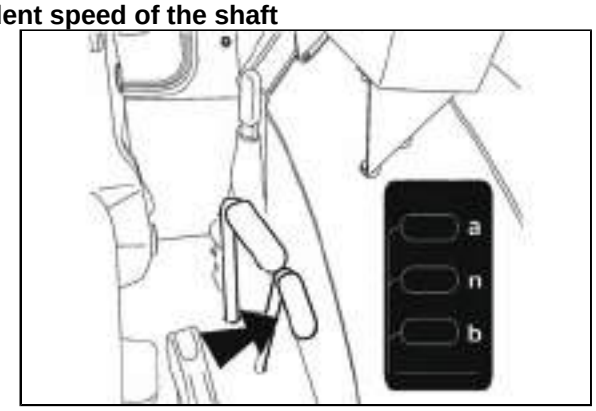

G154

PTO speed control lever

a - 540 rpm
n - neutral
b - 1000 (540E) rpm

The tractor standard type is equipped only with 540 rpm and the lever is not installed.
Change is implemented when the tractor is in rest and the hand lever switching off the output shaft coupling is off.

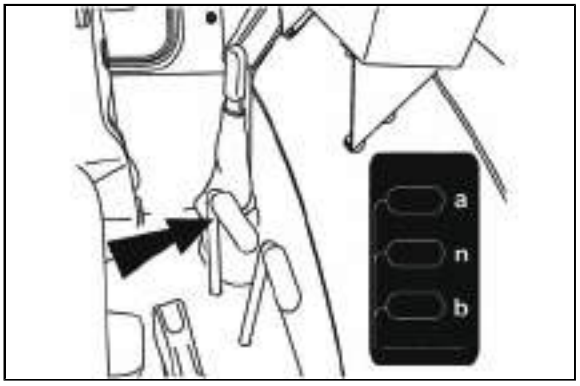

G153a

PTO speed control lever - Tractor equipped with reversor or reductor for creeping gears

a - 1000 (540E) rpm
n - neutral
b - 540 rpm

The tractor standard type is equipped only with 540 rpm and the lever is not installed.
Change is implemented when the tractor is in rest and the hand lever switching off the output shaft coupling is off.

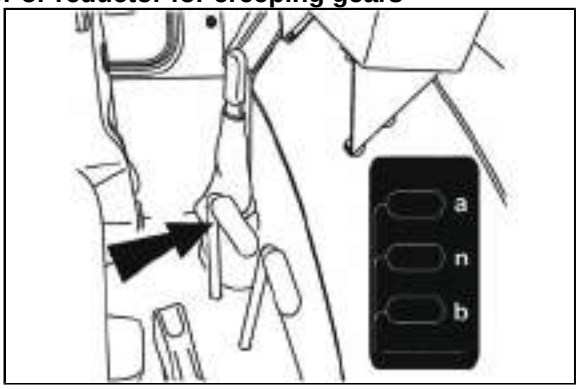

G153a

Front PTO shaft

Front PTO shaft is equipped with a solid six or twenty-one splined end point and it comes only in design of 1,000 revolutions.
Tractor may be equipped with front PTO shaft with varied direction of spinning:

a -	In compliance with the direction of engine revolutions (standard)
b -	Against the direction of engine revolutions (*on request)

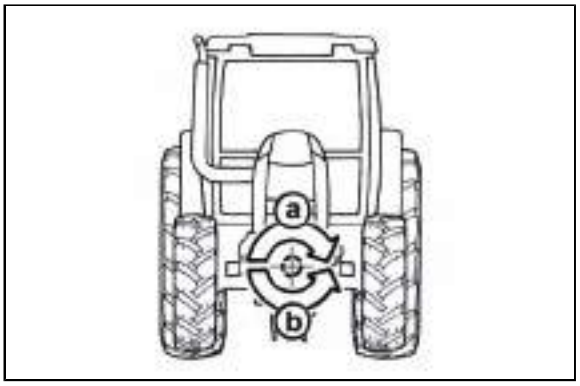

F_02_64

Engagement of the front output shaft Zuidberg

The front output shaft Zuidberg can be engaged and disengaged using a switch on the dashboard. Activation of the switch is indicated by the illuminated symbol on the switch.
The switch is fitted with a mechanical lock (1) against unintentional switching on. When activating the switch, depress also the lock (1) in direction of the arrow.

The switch shall be off when starting the engine.

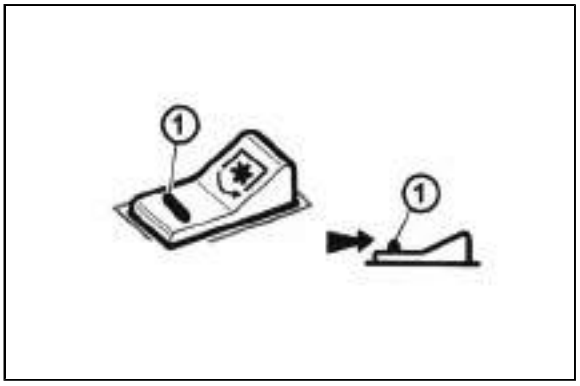

H355

PTO DRIVE OF AGRICULTURAL MACHINES

Maximum transferred output

P15N038

Output shaft	Transferred power
front (Zuidberg)	
1,000 rpm	45 kW*
rear	
1,000 rpm	full engine power
540 rpm	full engine power
540E rpm	full engine power

In case of a transfer of power without shocks, the value of the transferred power may be increased to 50 kW.

Drive of machines with greater inertia masses
(crushers, rotary harrows, reaping machines, etc.)
Cardan shaft for drive of these machines must be equipped with the so called freewheel clutch which ensures disconnection of torque transfer with retroaction from the machine on the tractor.

troj

Hydraulic system
The hydraulic system is intended for lifting and lowering of agricultural machines and implements attached in the rear three point hitch.

It consists of the inner and outer circuits. Gear pump is the source of pressure oil.
Oil is taken from reservoir shared by gearbox and transmission.
Hydraulic pump cannot be switched off. If the engine is working, the pump is on.

The amount supplied is:
standard 50 l/min
on request 60 l/min

The pressure in hydraulic system raised by the hydraulic pump is restricted by a safety valve to 19 MPa.

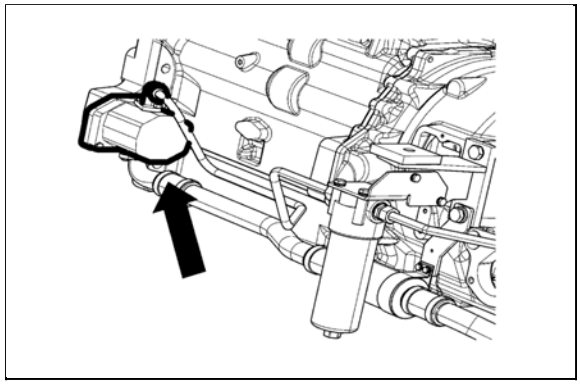

P11N001

Hydraulics control panel
Hydraulics control panel is located in the area of the right wing.
Controlling the rear three-point hitch is enabled by the inner hydraulic circuit (1).
Controlling outer hydraulic circuits (couplers) is enabled by outer hydraulic circuit (2).

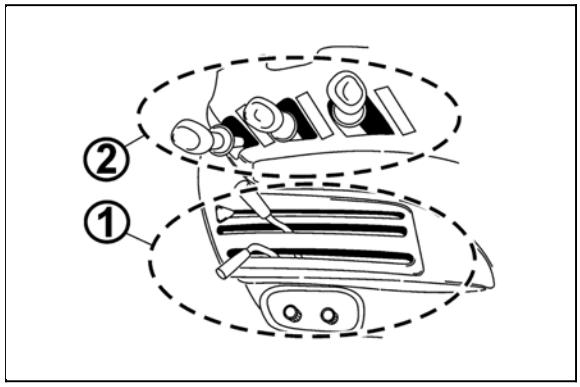

P+11N001

Ways to regulate inner hydraulic circuit

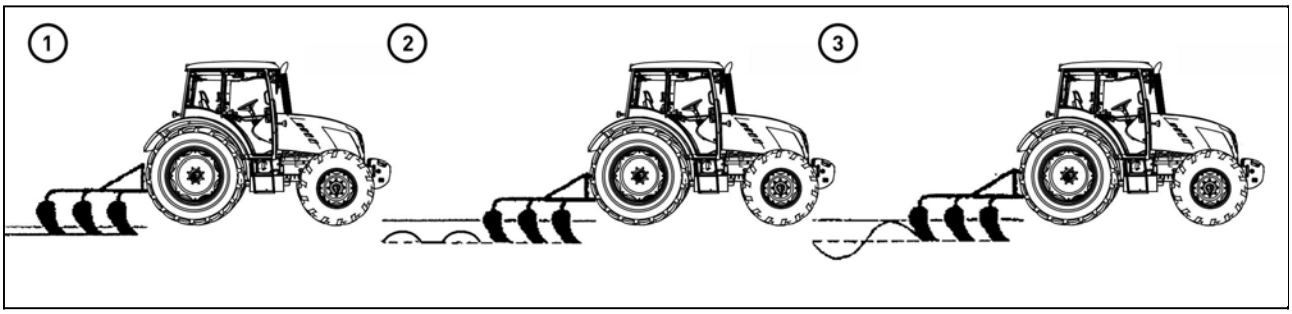

P+11N002

Hydraulic system allows of three ways to regulate the lifting of the rear three-point hitch:

Position regulation (img. 1) - the tool connected to the rear three-point hitch is automatically kept in the same height (position) with regard to the tractor.

Mixed regulation (img. 2) - a combination of position and power regulation. Suitable mainly for tilling areas of different soil resistance.

Power regulation (img. 3) - the tool connected to the three-point hitch is automatically being adjusted depending on changing soil resistance.

All the regulations can also be used when working with a tool equipped with a support wheel in so-called free (floating) position.

Controlling the inner hydraulic circuit

1.position or power regulation lever
2.lever for selecting floating position, adjusting the height of the three-point hitch in position regulation or mixed regulation.
3.three-point hitch lowering speed control
4.hydraulic system sensitivity control
5.adjustable stop

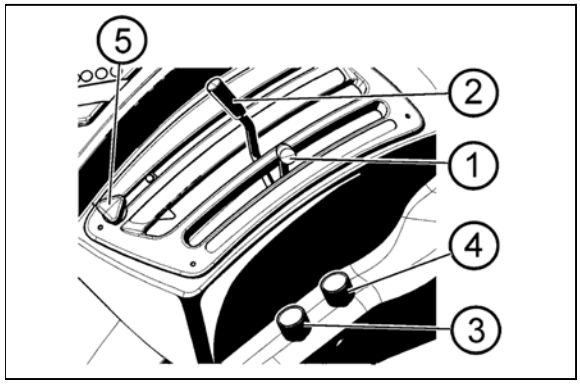

P+11N003

Free (floating) position

Free (floating) position makes it possible to work with tools with a support wheel. In this position, the arms of the rear three-point hitch are loose.
Move lever (2) to the front position (a).
The position of lever (1) makes no difference.

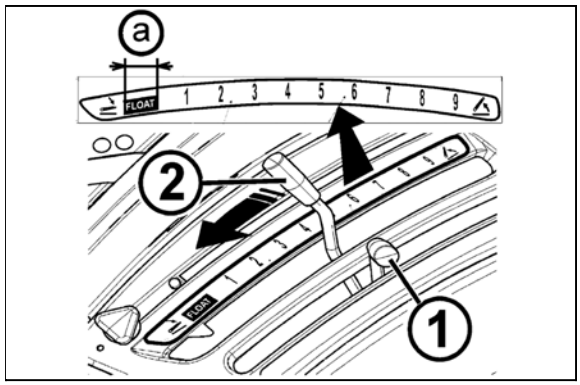

P+11N004

Adjustable stop

Under default settings, it is recommended to set the adjustable stop (1) to a position on the edge between floating position and the beginning of the range of lifting of the rear three-point hitch (b). After pushing the lever towards you, the lever can be moved over the adjustable stop.

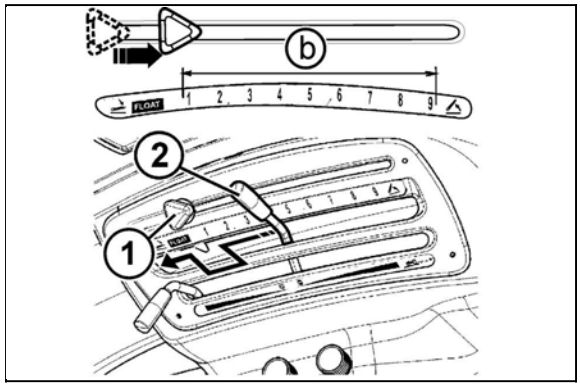

P+11N009

Three-point hitch lowering speed control

Three-point hitch lowering speed control (3) selects the speed of lowering the arms of the rear three-point hitch. Turning the knob in (b) direction reduces the lowering speed of the arms of the rear three-point hitch, turning it in (a) direction increases the speed. If the knob is turned in (b) direction to its stop point, the arms of the rear three-point hitch cannot be lowered.

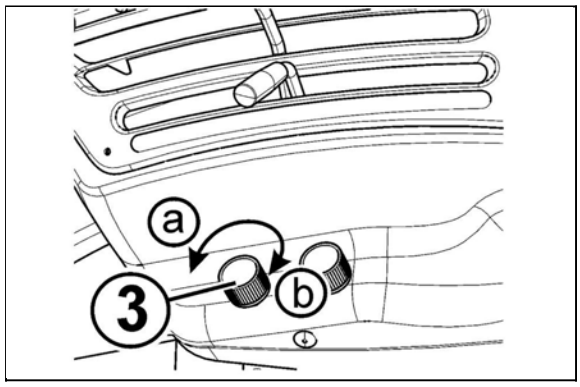

P+11N006

Hydraulic system sensitivity control

Hydraulic system sensitivity control (4) adjusts the sensitivity of the hydraulics in power or mixed regulation. Turning the knob in (a) direction increases sensitivity, turning it in (b) direction decreases sensitivity.

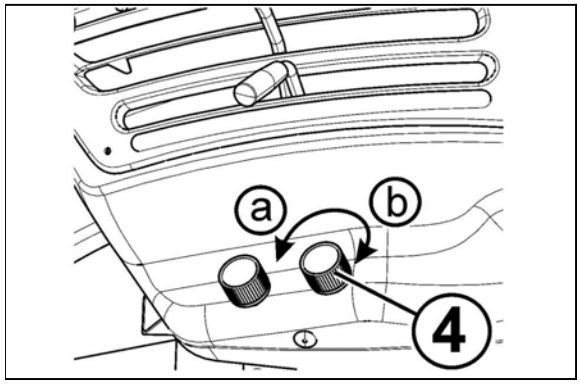

E408

Position regulation of the lifting of the rear three-point hitch

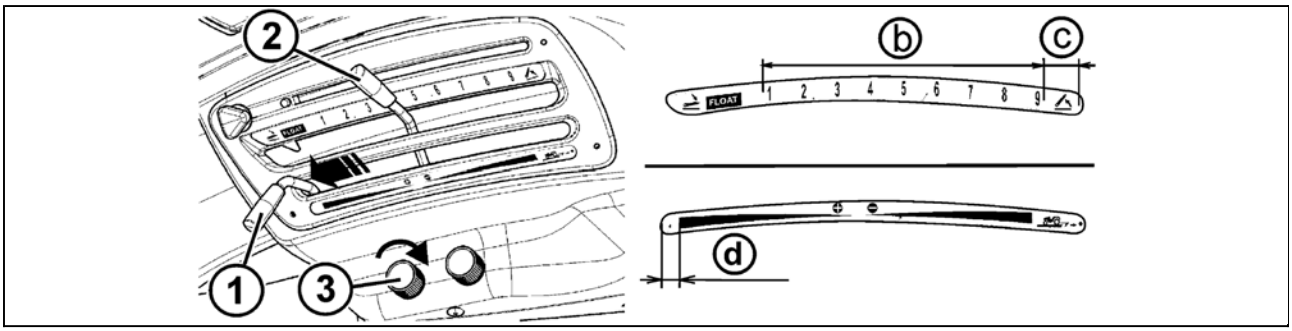

P+11N008

Position regulation of the lifting of the rear three-point hitch means that the tool connected to the rear three-point hitch is automatically kept in the same height (position) with regard to the tractor.
Move lever (1) to the front position (d). Adjust the height of the rear three-point hitch with tools within the (b) range by lever (2). Adjusting the height is smooth within the range 1 - 9. In position 1, the arms of the rear three-point hitch are in the lower position, in position 9, in the highest position. Position (c) is a transport position when the tools connected to the rear three-point hitch is raised at maximum.

To transport tools which are connected to the rear three-point hitch always use position regulation.

To raise tools into transport position, turn the three-point hitch lowering speed control knob (3) in the direction shown by the arrow up to the stop point, which results in interrupting the oil flow in hydraulics. Should tools connected to the rear three-point hitch not be lowered, check the position of the speed lowering control knob (3) - turn it in the opposite direction than shown by the arrow.

If tools connected to the rear three-point hitch are long and heavy, the arms of the rear three-point hitch may get locked in the transport position during transport. If the lowering speed control knob (3) is loosened and the tools still cannot be lowered, move lever (2) to the floating position (c) for a short time and immediately get back to the lowering range (d). The arms of the rear three-point hitch start to go down as set by lever (2).

Power regulation of the lifting of the rear three-point hitch

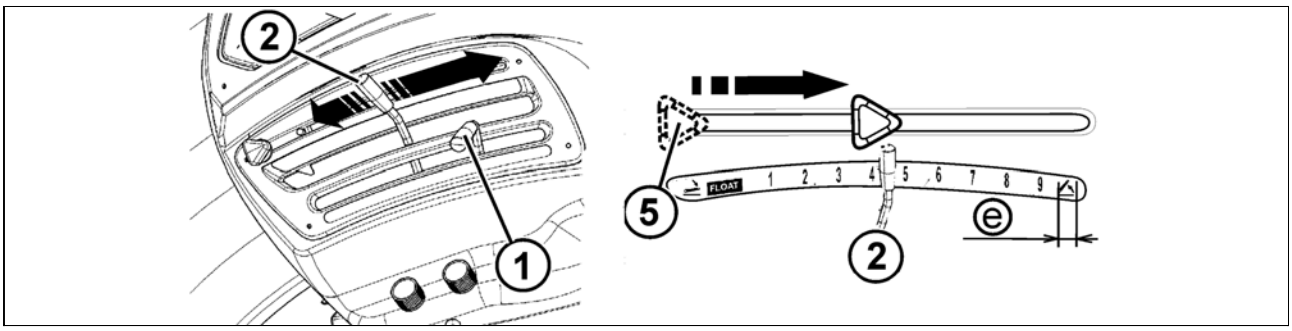

P+11N010

Power regulation of the lifting of the rear three-point hitch means that the tool connected to the rear three-point hitch is automatically being adjusted depending on changing soil resistance.
Set the adjustable stop (5) to a position on the edge between floating position and the beginning of the range of lifting of the rear three-point hitch.
Move lever (2) to (f) position - to the adjustable stop (5).
Move lever (1) to (g) position, accelerate the tractor and move lever (1) in the direction shown by the arrow to set the depth of tilling (in (g) position, depth is the lowest).
Once the depth of tilling is set, lever (1) must be kept in constant position. At the end of each row, raise the tool connected to the rear three-point hitch only by moving lever (2) to (e) position. To lower the tool to its operating position again, move lever (2) to (f) position.

The rear three-point hitch may start oscillating under the influence of changing soil resistance. To reduce oscillation, set lower hydraulic system sensitivity by turning the control knob (4) in (b) direction.

Mixed regulation of lifting the rear three-point hitch

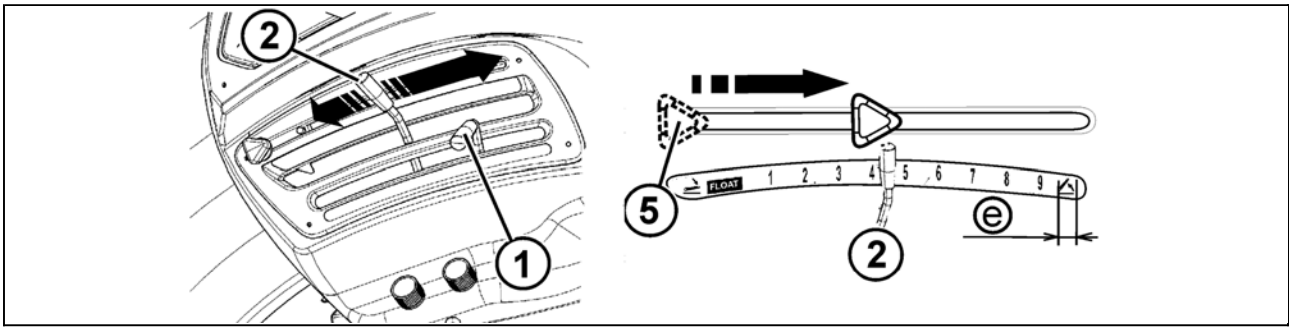

P+11N010

Mixed regulation of lifting the rear three-point hitch means that the tool connected to the rear three-point hitch is automatically being adjusted depending on changing soil resistance and at the same time it prevents any increase in depth of tilling in case of smaller soil resistance.
Set the depth of tilling by lever (1) as described in 'Power regulation of the lifting of the rear three-point hitch'. Then start moving lever (2) in the direction shown by the arrow until the arms of the rear three-point hitch start to rise slightly. Herewith, mixed regulation has been set. Move the adjustable stop (5) to lever (2) which has been set and lock it. At the end of each row, raise the tool connected to the rear three-point hitch only by moving lever (2) to (e) position. To lower the tool to its operating position again, move lever (2) to the preset stop.

Exterior rear hydraulic arms controls
Exterior rear hydraulic arms controls are located on the rear right wing. They make it easier for the operator to conncet tools by controlling the movements of the lower drawbars of the three-point hitch from the outside. They only serve for connceting and disconnecting the tools.

Img. (A)
Before using exterior controls, move the power regulation lever (1) to its utmost position.

Lowering hydraulic arms img. (B):
Move lever (3) in the direction shown by the arrows (moving the lever is restricted with a link). By repeating this procedure, hydraulic arms are lowered in small steps.

Raising hydraulic arms img. (C):
Move lever (3) in the direction shown by the arrows (moving the lever is restricted with a link). By repeating this procedure, hydraulic arms are raised in small steps.

If the lifting device controlled by exterior controls is loaded, movement of the lower drawbars within one step (on the exterior controls) is longer than if unloaded.

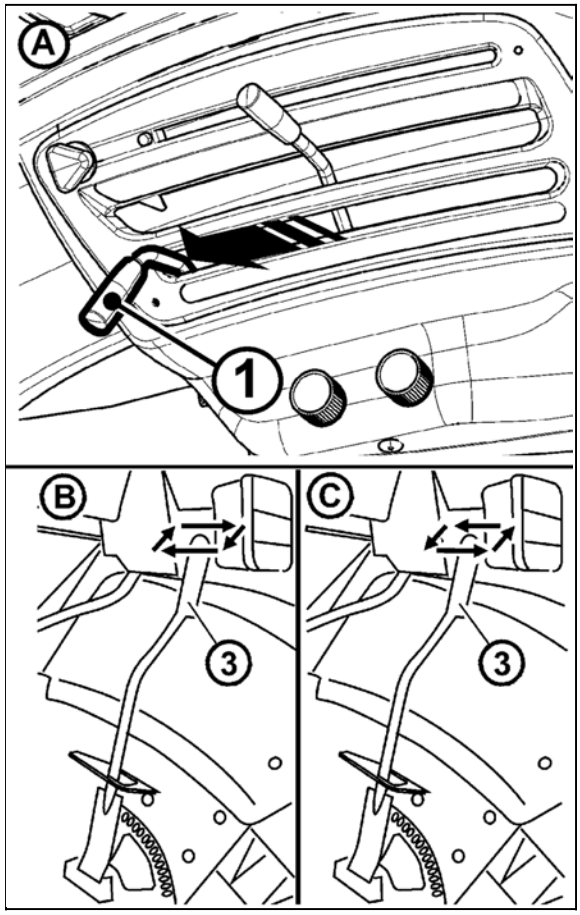

P+11N016

Outer hydraulic circuit
It supplies pressure oil for hydraulic devices on outer drives of hydraulics ended with couplers. Coupler sockets with 12.5 mm bore are in accordance with the international recommendation of ISO.

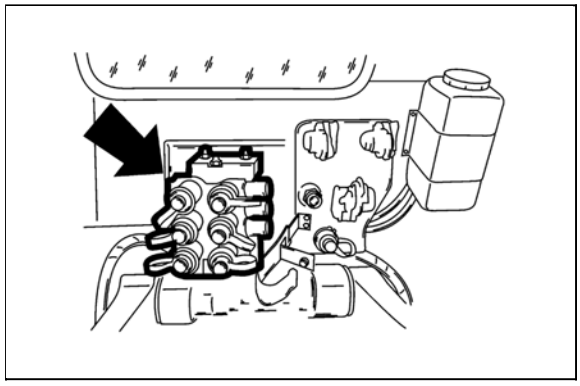

P+11N012

Outer hydraulic circuit controls

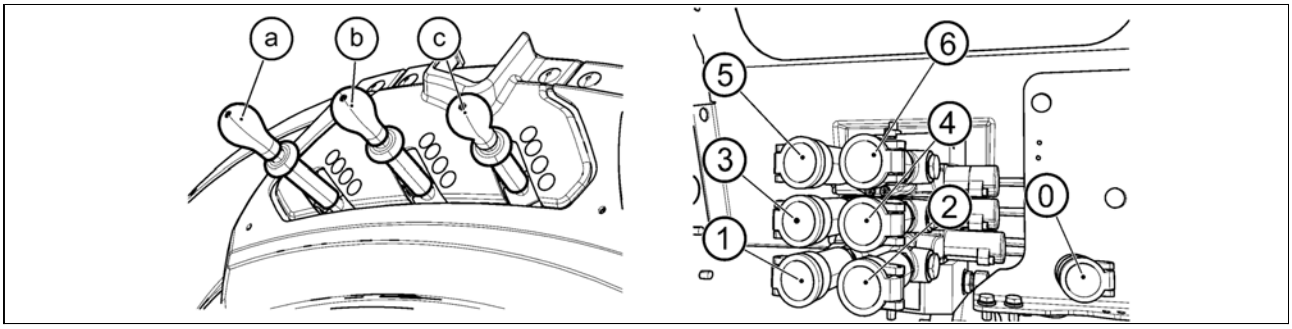

P+11N015

Outer hydraulic circuit controls are located on the right wing.

lever (a) controls the lower section of distributor - quick couplers (1) and (2)
lever (b) controls the central section of distributor - quick couplers (3) and (4)
lever (c) controls the upper section of distributor - quick couplers (5) and (6)
Quick coupler (0) is directly connected with transmission and it is supposed for recuperative oil of exterior hydraulic appliances (e.g. from rotary hydraulic engines etc.).

According to the equipment of the tractor, the following combinations of control levers and quick couplers can be supplied:
lever (a) - quick couplers (1) and (2)
levers (a) and (b) - quick couplers (1), (2), (3) and (4)
levers (a),(b) and (c) - quick couplers (1), (2), (3), (4), (5) and (6)
Quick coupler (0) is supplied in any case.

If the tractor is equipped with front three-point hitch, use lever (b) to control it. When the front three-point hitch is used, quick couplers cannot be connected as they are pressured together with the front three-point hitch! When you finish using the front three-point hitch and want to use the section with quick couplers 3 and 4 with connection to the front three-point hitch, raise the arms of the front three-point hitch to the transport position and move the front three-point hitch lever to the 'locked' position.

Locking control levers

Outer hydraulic circuit control levers are locked in neutral (N) position.
To unlock them, raise the lock control (1) and turn it to a stop point in the direction shown by the arrow.
To lock them again, move the levers to neutral (N) position and turn the lock control in the opposite direction than shown by the arrow to a stop point and push the control down. This locks the lever in neutral position.

For safety reasons, always lock outer hydraulic circuit levers in neutral position (N).

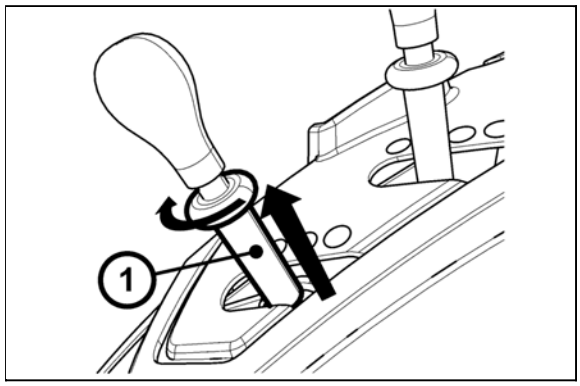

P+11N014

Different functions of outer hydraulic circuit control levers

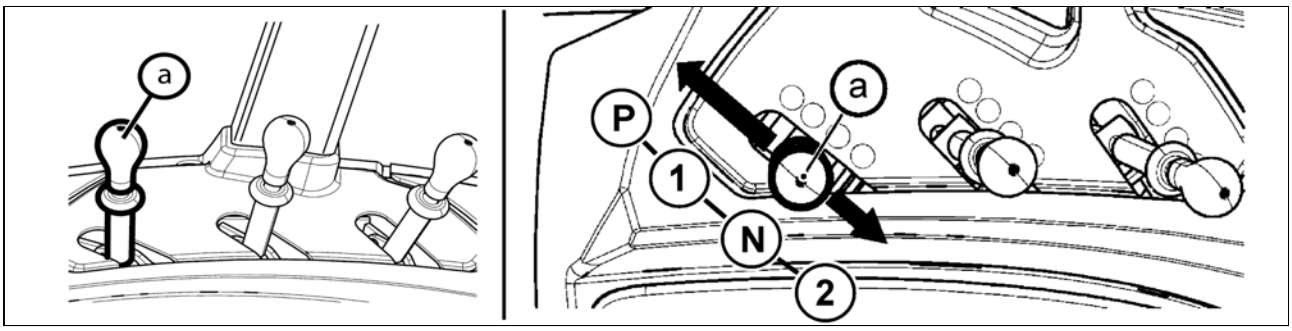

P+11N017

There are four positions of the lever (a):

N - Neutral position. Quick coupler drives (1) and (2) are closed and oil in the hydraulic appliance connected is blocked. Lever (a) is locked in this position.
1 - Pressure in quick coupler (1). Quick coupler (2) is connected with the drain. Lever (a) is locked in this position. In case pressure exceeds 16.5 MPa when connected to quick coupler (1), lever (a) automatically returns to (N) position - kick-out function.
2 - Pressure in quick coupler (2). Quick coupler (1) is connected with the drain. Lever (a) is locked in this position. In case pressure exceeds 16.5 MPa when connected to quick coupler (2), lever (a) automatically returns to (N) position - kick-out function.
P - Floating position. Both quick couplers (1) and (2) are connected with the drain and oil is free to flow in both directions. Lever (a) is locked in this position.

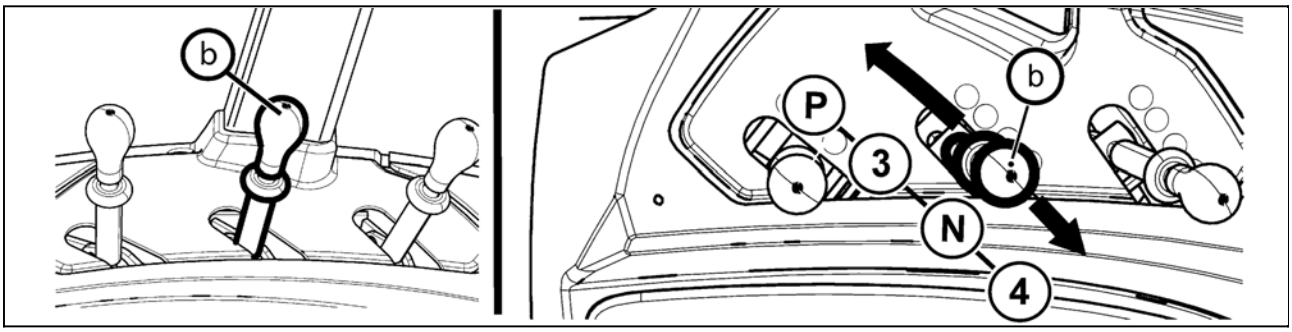

P+11N018

There are four positions of the lever (b):

N - Neutral position. Quick coupler drives (3) and (4) are closed and oil in the hydraulic appliance connected is blocked. Lever (b) is locked in this position.
3 - Pressure in quick coupler (3). Quick coupler (4) is connected with the drain. It is necessary to hold lever (b) in this position, when released, lever (b) automatically returns to (N) position. In addition, quick coupler (3) is equipped with a one-way valve - convenient for connecting a tool which requires higher degree of impermeability - minimum lowering of the tool during transport.
4 - Pressure in quick coupler (4). Quick coupler (3) is connected with the drain. Lever (b) is locked in this position.
P - Floating position. Both quick couplers (3) and (4) are connected with the drain and oil is free to flow in both directions. Lever (b) is locked in this position.

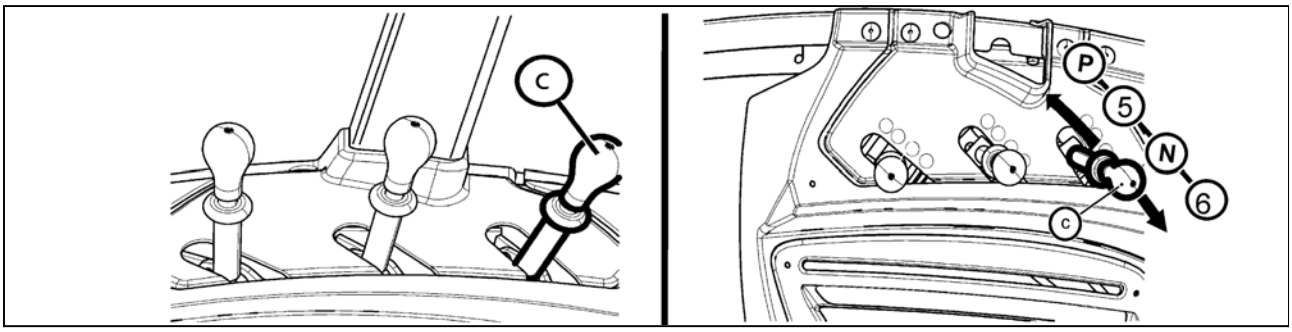

P+11n019

There are four positions of the lever (c) which controls quick couplers (5) and (6):

N - Neutral position. Quick coupler drives (5) and (6) are closed and oil in the hydraulic appliance connected is blocked. Lever (c) is locked in this position.
5 - Pressure in quick coupler (5). Quick coupler (6) is connected with the drain. It is necessary to hold lever (c) in this position, when released, lever (c) automatically returns to (N) position. In addition, quick coupler (5) is equipped with a one-way valve - convenient for connecting a tool which requires higher degree of impermeability - minimum lowering of the tool during transport.
6 - Pressure in quick coupler (6). Quick coupler (5) is connected with the drain. Lever (c) is locked in this position.
P - Floating position. Both quick couplers (5) and (6) are connected with the drain and oil is free to flow in both directions. Lever (c) is locked in this position.

Different functions of outer hydraulic circuit control levers- one section distributor

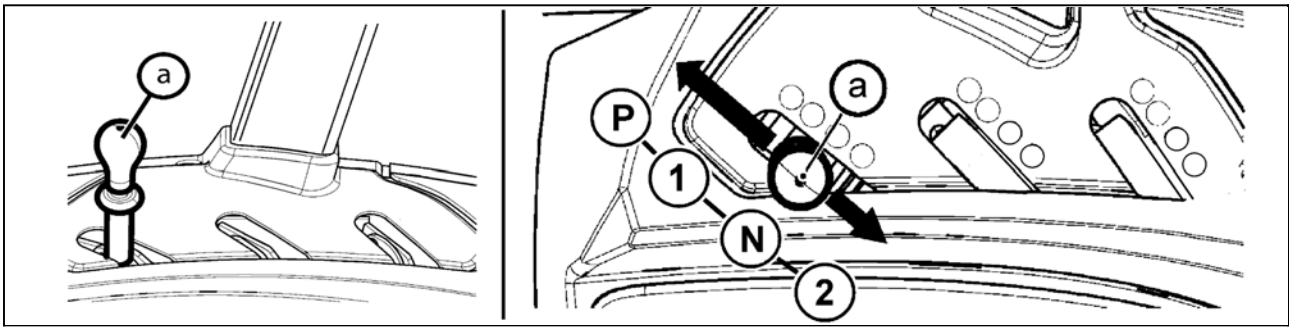

P+11N017d

There are four positions of the lever (a):

N - Neutral position. Quick coupler drives (1) and (2) are closed and oil in the hydraulic appliance connected is blocked. Lever (a) is locked in this position.
1 - Pressure in quick coupler (1). Quick coupler (2) is connected with the drain.
2 - Pressure in quick coupler (2). Quick coupler (1) is connected with the drain. Lever (a) is locked in this position.
P - Floating position. Both quick couplers (1) and (2) are connected with the drain and oil is free to flow in both directions. Lever (a) is locked in this position.

Amount of oil taken from outer hydraulic drives
If the amount of oil in transmission decreases after disconnecting the tool due to its permanent outflow out of the tractor into the machine's hydraulic circuit, refill the oil missing.

If the amount taken exceeds the limit, hydraulic pump can absorb air and can get damaged.

For maximum amount of oil taken see the following table.

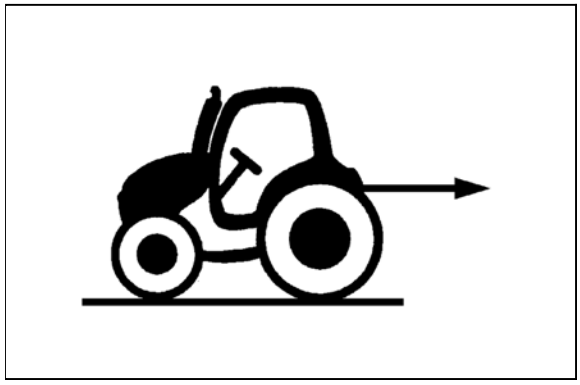

E413

Working area: *in flat terrain* ***Max. amount of oil taken:*** *20 liters* ***Gearbox filling:*** *standard filling*
Working area: *in a slope* ***Max. amount of oil taken:*** *13 liters* ***Gearbox filling:*** *standard filling*
Working area: *in flat terrain* ***Max. amount of oil taken:*** *27 liters* ***Gearbox filling:*** *gearbox oil filling increased by 7 liters(max. amount of oil in gearbox allowed)*
Working area: *in a slope* ***Max. amount of oil taken:*** *20 liters* ***Gearbox filling:*** *gearbox oil filling increased by 7 liters(max. amount of oil in gearbox allowed)*

Connecting and disconnecting quick-couplers

When connecting and disconnecting the quick-couplers pay increased attention with regard to the residual oil that remains in the socket or on the plug of the quick-coupler. For environmental reasons after every disconnection of quick-couplers this residual oil must be removed with any textile material.

Quick-couplings with drip collection
On request, dripping system for holding leakage oil can be installed. Regularly check whether the tank is not full; dispose of the oil in an environment-friendly way.

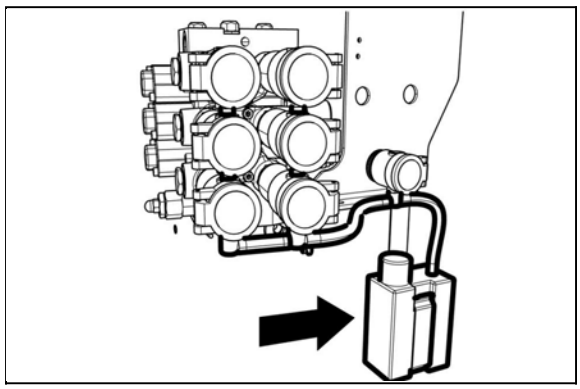

P+11N020

Connecting machines and tools to External hydraulic circuit

Connecting a double acting cylinder
A double acting cylinder must always be connected to quick couplers of one section.

Connecting machinery and tools assembled from more parts
When working with agriculture machinery which is assembled from more parts (combinators, scrubbers, or harrows) where the edge frame is hinged to the central frame because it is diagonally folded during transport by independent hydraulic cylinders which are controlled by outer hydraulic circuit of the tractor, it is recommended to connect the lifting arms of the cylinders to quick couplers (3) and (5) which are equipped with a one-way valve.

Connecting rotary hydraulic engine
If a hydraulic engine is connected to outer hydraulic drive, it is always necessary to connect its returnable arm to quick coupler (0). Filling (pressure) arm can be connected to quick couplers (1) or (2), where the hydraulic engine is protected by the 'kick-out' function from overload. This function stops the hydraulic engine if pressure in the filling arm exceeds 17 MPa.

Connecting reverse rotary hydraulic engine
Due to its function, reverse rotary hydraulic engine must be connected to quick couplers of one section. It is recommended to use quick couplers (1) and (2), where the hydraulic engine is protected by the 'kick-out' function from overload. This function stops the hydraulic engine if pressure in the filling arm exceeds 17 MPa. If the hydraulic engine is connected to quick couplers of different sections, both arms must be equipped with safety valves which can be relied on to restrict high pressure peaks during run-out. Connect the safety valves drain to quick coupler (0).

Connecting external hydraulic distributor
It is recommend to connect external hydraulic distributor to quick couplers (4) or (6). Control levers (b) and (c) are mechanically locked in these positions without hydraulic lock.

Auxiliary machines using oil filling of external hydraulic circuit must be filled with the same kind of oil, which is recommended for gear system of the tractor! Quick-couplers sockets of an auxiliary machine need to be properly cleaned before connecting.

Controlling front three-point hitch
The hitch is equipped with two single acting hydraulic cylinders which are supplied with oil from an additional hydraulic distributor. To lift or lower, use lever (b) of the additional distributor.

3 position	lifting
4 position	lowering
N position	locking the hitch
P position	not to be used

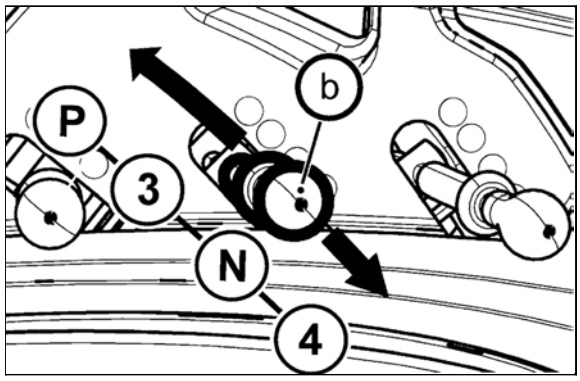

P+11N021

If the tractor is equipped with front three-point hitch, use lever (b) to control it. When the front three-point hitch is used, quick couplers cannot be connected as they are pressured together with the front three-point hitch! When you finish using the front three-point hitch and want to use the section with quick couplers 3 and 4 with connection to the front three-point hitch, raise the arms of the front three-point hitch to the transport position and move the front three-point hitch lever to the 'locked' position.

Front outlets of the external hydraulic circuit
On request, the tractor can be equipped with external hydraulic circuit outlets located in the front.
The quick couplings (1) and (2) are the pressure couplings, the quick coupling (0) is directly connected to the space of the axle final drive housing and is designed so that the return oil can flow back from the external hydraulic appliances.
The quick couplings sockets with the 12.5 mm inside diameter comply with the international ISO recommendations.

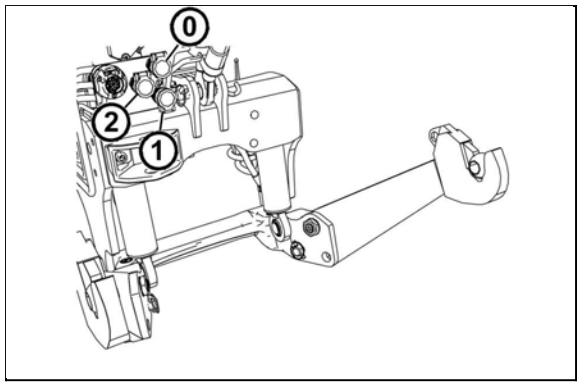

P13N002

Control of the external hydraulic circuit front outlets
The front outlets of the external hydraulic circuit are controlled by a lever (a) which has four positions:

N - Neutral position. Quick coupler drives (1) and (2) are closed and oil in the hydraulic appliance connected is blocked. Lever (a) is locked in this position.
1 - Pressure in quick coupler (1). Quick coupler (2) is connected with the drain. Lever (a) is locked in this position. In case pressure exceeds 16.5 MPa when connected to quick coupler (1), lever (a) automatically returns to (N) position - 'kick-out' function.
2 - Pressure in quick coupler (2). Quick coupler (1) is connected with the drain. Lever (a) is locked in this position. In case pressure exceeds 16.5 MPa when connected to quick coupler (2), lever (a) automatically returns to (N) position - 'kick-out' function.
P - Floating position. Both quick couplers (1) and (2) are connected with the drain and oil is free to flow in both directions. Lever (a) is locked in this position.

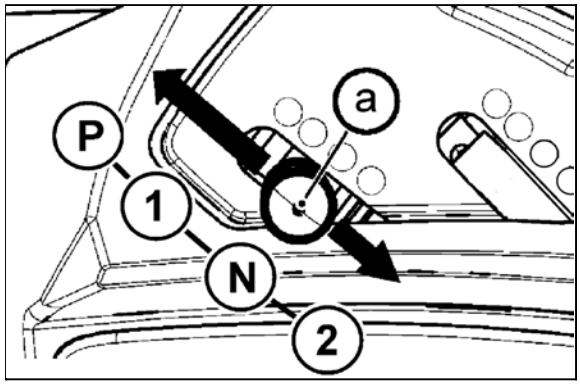

P13N001

NOTES

HITCHES

Rear three-point hitch

Serves for connecting carrier-mounted or semi mounted agriculture machines and tools with linkage points of category I. or II. pursuant to ISO. The categories differ based on the length of linkage axis, which is the distance of the centre of balls of lower linkage joints with connected tool.

Category I.	
Length of linkage axis	728 mm
Ø of holes of connecting balls of lower draw bars pursuant to ISO	28 mm
Ø of upper draw bar hole	25 mm

Category II.	
Length of linkage axis	870 mm
Ø connecting balls holes of lower draw bars pursuant to ISO	28 mm
Ø of upper draw bar hole	25 mm

1. Upper draw bar
2. Lift rod left
3. Lift rod right
4. Limiting draw bars
5. Lower draw bars

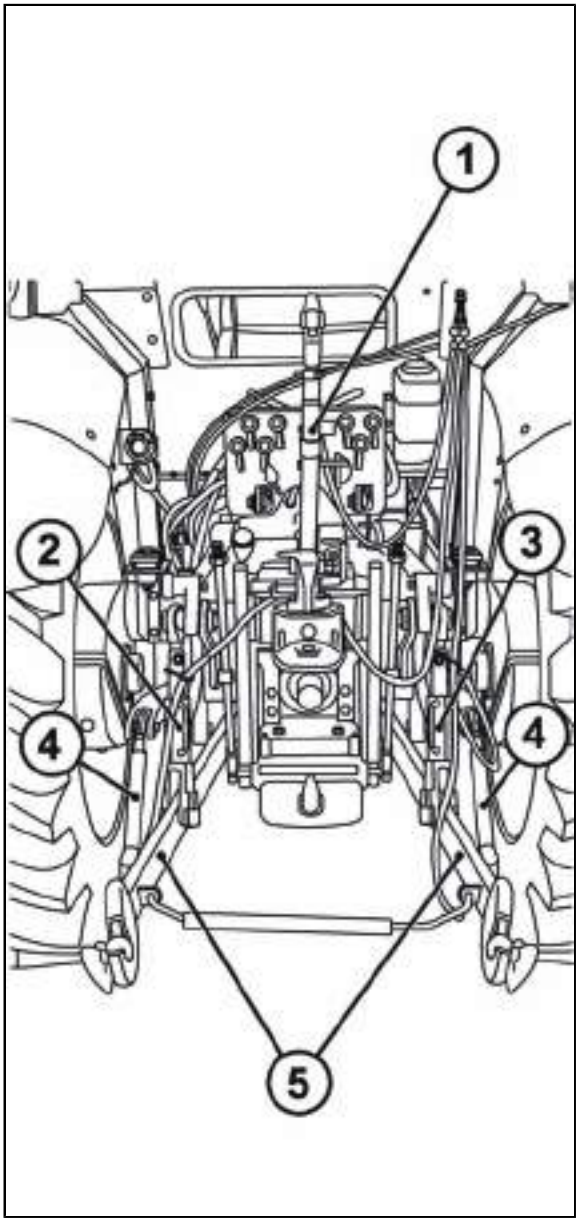

E451

Safety principles of working with the three-point hitch

Persons that are not authorized to work with the attached implement must not stand between the tractor and the hitched machine (implement) - (A). Do not park the tractor with an attached implement in the lifted position (B). During a drive without an implement the lower draw-bars (5) must be connected with springs and the upper draw-bar (1) must be inserted into the spring suspension! During transport of implements the limiting draw-bars (4) of the lower draw-bars must be adjusted in such a way to avoid unwanted lateral movement of the implement!

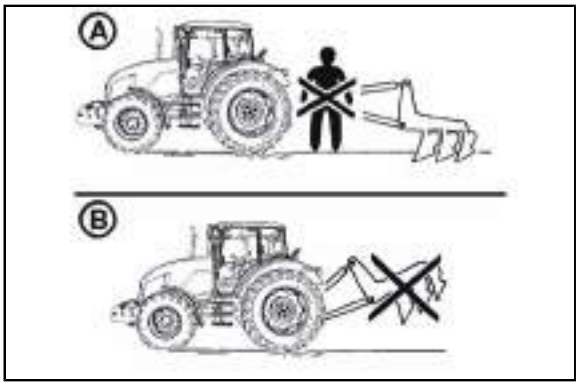

F11N032

HITCHES

Height adjustment of the lifting draw-bars
Lifting pull rod see fig. (A):
Perform adjustment by turning of the eye (1) after disconnection of the upper end of the lifting pull rod.

Lifting pull rod see fig. (B):
Pull out the arm cross (2) in direction of the arrow and perform adjustment by turning of the arm cross.

According to equipment of the tractor both pull rods can be arranged as shown on fig. (B)

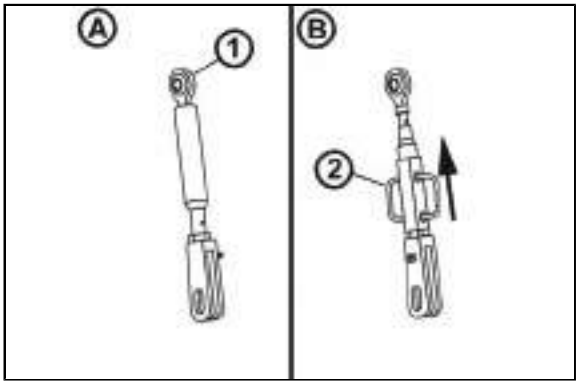

E453a

Fixed and free position of the lower hydraulic draw-bars
Fixed position of the lower hydraulic draw-bars (A):
The pin head (1) and washer (2) are installed horizontally.

Free position of the lower hydraulic draw-bars (B):
The pin head (1) and washer (2) are installed vertically.

The free position enables free connection of the tractor and implement. In this case both the draw-bar ends may move freely against each other as regards their height.

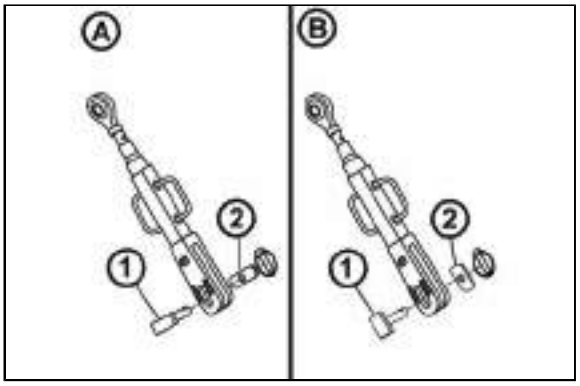

E454

Limiting draw-bars
The limiting draw-bars - stabilizers (1) limit or completely prevent lateral swinging of the lower draw-bars. The adjustment of the left and right limiting draw-bar is performed by turning of the draw-bar pipe, see arrow.

Both the limiting draw-bars must always be installed on the tractor.

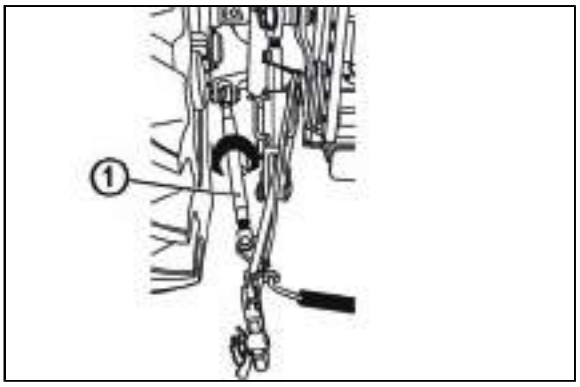

E455

Upper pull rod
Length of the upper pull rod (1) is adjustable. The pull rod can be connected to the tractor to one of four holes in the bracket that transfers forces from the hitched implement to the torsion rod in the cover of the hydraulics regulation.

When transporting an implement it is necessary to reposition the upper pull rod to the hole 'd' to prevent overloading of the lifting hydraulics kinematic system or fall of the hitched mechanism.

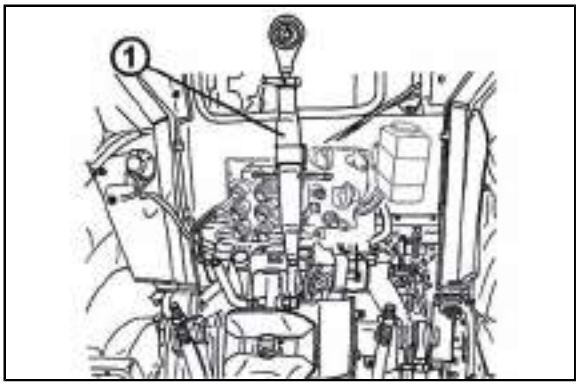

P11NE456

When extending the upper pull rod it is necessary to pay attention that both joints are screwed out from the pull rod pipe in the same length.

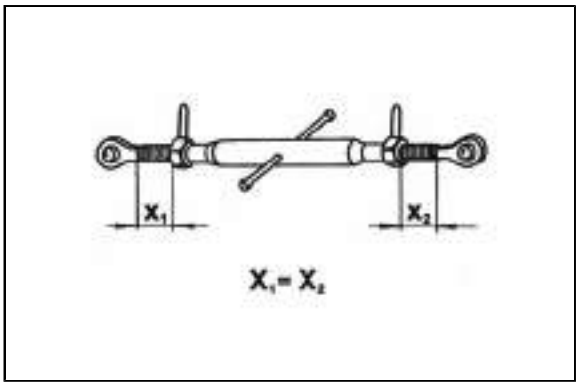

E457

Selection of holes in the bracket
Connection of the upper pull rod to some of the holes 'a' to 'd' of the bracket influences:

- Sensitivity of hydraulic control (system selection lever in position 'D' or 'M'). When the drawbar is connected to opening 'a', the sensitivity of the control is highest.

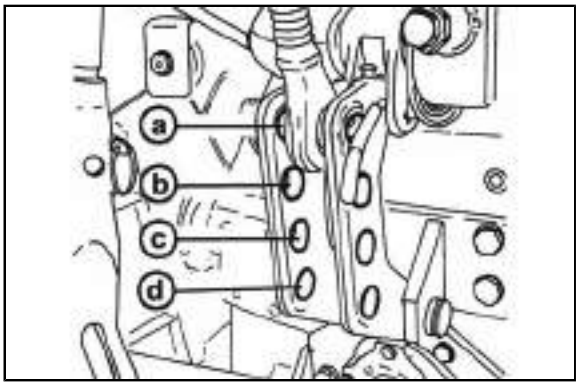

E458

***Lower draw bar with slipping out end pieces**
Lower draw bar of linkages are equipped with semi-automatic protruding CBM end pieces. They enable connecting of tools behind a tractor. After protruding securing pegs (1) slip the end pieces out (2). Slipped-out end pieces are attached to tightening pins of mounted tools.
After connecting the mounted tools, release the arms of hydraulics. By lowering them down and reverse travel of a tractor, endpoints (2) are slid onto draw bars and automatically are locked in working position by means of locking pegs (1).

Always check the position of slipped-out end pieces and locking pegs, see fig. (3).

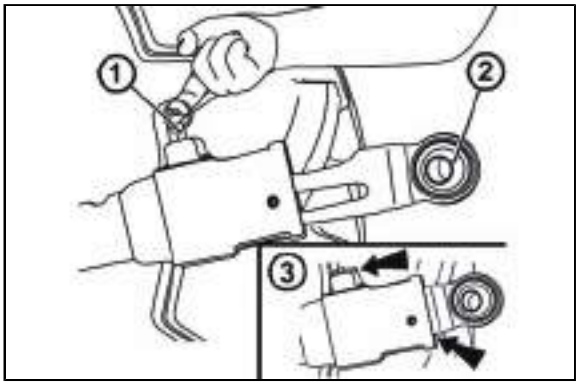

E459

***Lower draw bar with CBM hooks**
Both lower (3) and upper (4) draw bars of linkage are equipped with CBM hooks.
The tools must be first equipped with hanging CBM balls (1) and with limiting draw bars set the distance between lower draw bars of linkage (3).
When reversing and subsequently lifting a three-point linkage, its lower draw bars (3) are connected to tools and then upper draw bar (4) of three-point linkage is connected by the driver from cab.
When disconnecting tools, unlock the hooks, by control cable (2) heave upper draw bar (4) and by lowering three-point linkage disconnect lower draw bar (3).

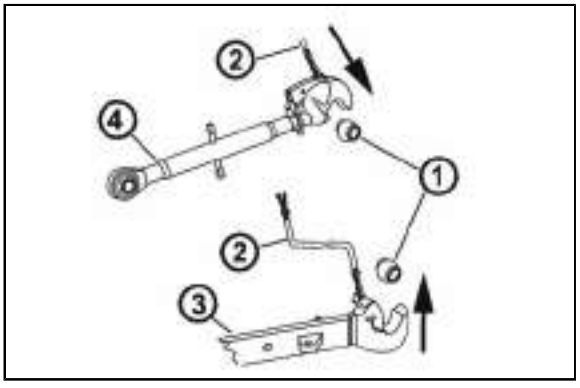

E460

Securing lower draw bars with CBM hooks

For extremely demanding working conditions (aggregation with heavy machinery on slopes or with aggregation side faced machines) we recommend safely locking the hook of lower draw bar by inserting a M8 screw to (S) hole and locking the screw with a pad.

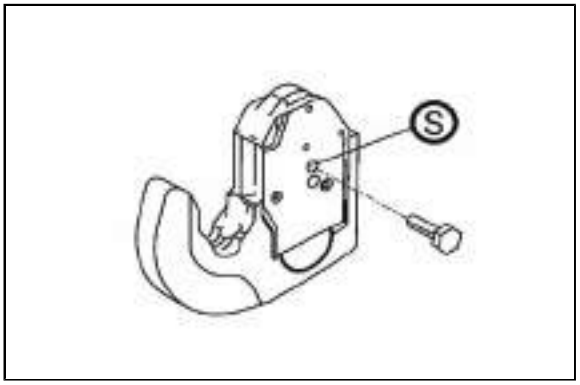

X901

***Front three-point hitch**

It is designed for attachment of frontally carried agricultural machines and implements in accordance with ISO 8759-2.

During transport of a carried implement the hitch must always be hydraulically locked in the lifted position with valves that are installed on the left side of the tractor over the front axle.

This hydraulic lock is recommended even in case no machine is attached to the three-point hitch.

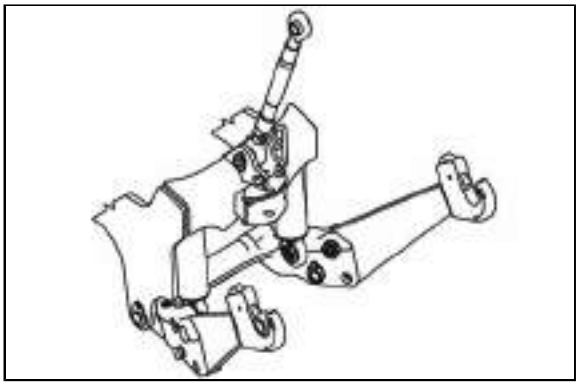

E461

Controlling front three-point hitch

The hitch is equipped with two single acting hydraulic cylinders which are supplied with oil from an additional hydraulic distributor. To lift or lower, use lever (b) of the additional distributor.

3 position	lifting
4 position	lowering
N position	locking the hitch
P position	not to be used

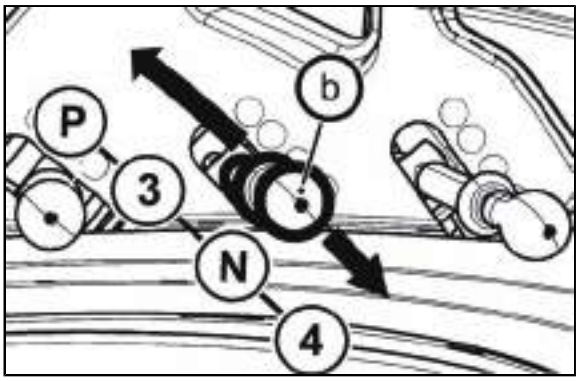

P+11N021

If the tractor is equipped with front three-point hitch, use lever (b) to control it. When the front three-point hitch is used, quick couplers cannot be connected as they are pressured together with the front three-point hitch! When you finish using the front three-point hitch and want to use the section with quick couplers 3 and 4 with connection to the front three-point hitch, raise the arms of the front three-point hitch to the transport position and move the front three-point hitch lever to the 'locked' position.

HITCHES

Adjusting the lowering rate of the front three-point hitch

Before the start of work with an implement attached to the front three-point hitch it is recommended to adjust the time necessary to lower the implement from the highest to the lowest position to 1 - 1.5 s by setting the throttle valve. By turning the valve body to the left (in the arrow direction) you will increase the lowering speed. During the adjustment the valve levers of the front hitch must be directed horizontally.

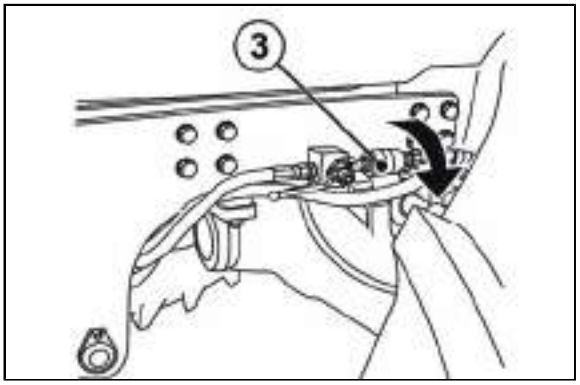

X463

Hydraulic lock of the front three-point hitch

Hydraulic locking of the front three-point hitch is performed in any position of the hydraulic cylinders with the ball valve in the front part of the tractor (2).

A	Free position Valve levers are in the horizontal position - The hitch can be controlled from the cabin
B	Locked position Valve levers are in the vertical position - The hitch is locked

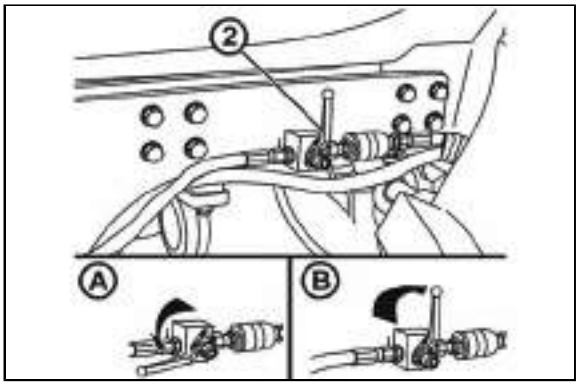

X464

Working and transport position of the front three-point hitch

A	Working position of the front three-point hitch
B	Transport position of the front three-point hitch

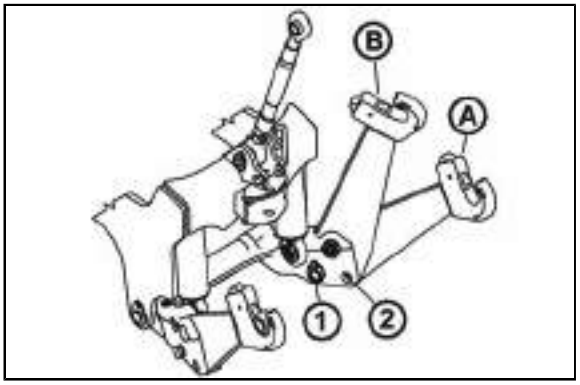

E466

Changing the position of the draw-bars of the front three-point hitch:

1. Release and remove the pin (1) from the opening.
2. Lift the arm from position (A) to position (B).
3. Lock the arm by inserting the pin (2) in the opening (2) and secure the pin.

Only insert the pin in the openings, never check whether the opening is free with your fingers!

Driving with agricultural machines attached to the front three-point hitch

The maximum permissible speed of the tractor with agricultural machines attached to the front three-point hitch is 15 km.h^{-1}. If no implement or weight is attached to the front three-point hitch, we recommend you to lift the lower lifting draw-bars to the transport position.

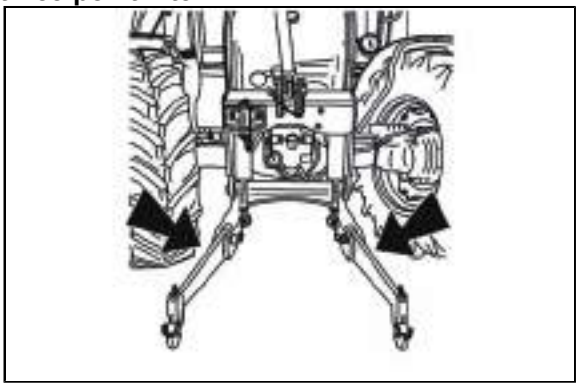

FH12N066

NOTES

WHEEL TREAD CHANGE

Change of the front wheel tread at front non-driven axle
Tread change is provided by sliding out and in the front axle knees (extensions) (A) when front axle is lifted and corresponding setting of adjusting elements is made.

Used tires	Adjustable tread (mm)
6,00 - 16	1600, 1900
6,50 - 16	1600, 1900
7,50 - 16	1495, 1570, 1870
7,50 - 20	1495, 1570, 1870
9,00 - 16	1495, 1570, 1870

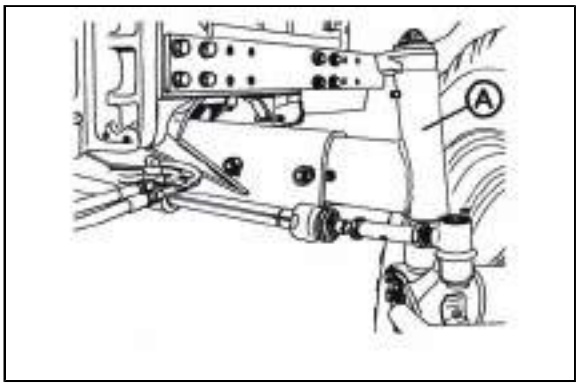

C501

Setting the front axle knees (extensions)

First of all fix the tractor against movement, lift the axle by lifting jack and support it.

- Thread out axle knee nuts and remove the screws (1).
- Loosen the lock nuts of ball joints (2) and ball joint heads (3) and thread out the both steering rods (4).
- Slide out (or in) the knees to the required tread, reassemble the axle screws. Tighten axle knee nuts by torque 177 - 196 Nm.
- First of all fix the tractor against movement, lift the axle by lifting jack and support it.
- Thread in the steering rods (4) with marked tread (they are supplied as option), make setting of toe-in and secure it with securing nuts (2,3).
- Tighten the nuts by torque 122 - 136 Nm.

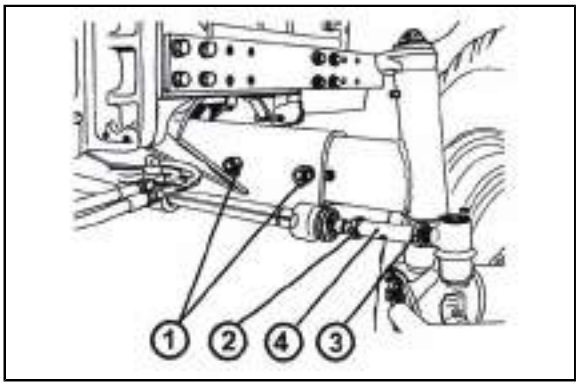

C502

WHEEL TREAD CHANGE

Change of front wheels track with front drive axle

Gauges of the front wheels of the front drive axle of the tractors equipped with screwed footer discs
Change of wheel track is done by a change of rim and disc position.

Secure the tractor against movement first, heave the axle with a hoist and support.

- Demount front wheels.
- Unscrew nuts of screws connecting a disc with rim and protrude the screws.
- Change wheel track by setting the rim to a requested position.
- Mount the screws back with pads and lock with nuts.
- Tighten nuts with a torque of 270 - 300 Nm.
- The nut of front wheels to be tightened with a torque of 250 - 290 Nm.
- After every release of a foot joint, tighten the screws to a prescribed value.
- After travelling a distance of 100 m with an unloaded tractor, retighten the joints to a prescribed torque.
- After tractor run-in tighten the joints after 3 Mh.
- After 10 Mh retest the nuts of discs and foots of wheel rim.

Used tires	Adjustable treads (mm)
280/85 R24, 11,2 - 24, 11,2R24, 320/85 R24, 12,4 - 24, 12,4R24	1525, 1620, 1680, 1770, 1825, 1920
340/58 R24, 13,6R24	1610, 1690, 1760, 1835, 1910

Possible adjustable tracks of the front wheels of the front driving axle of the tractors

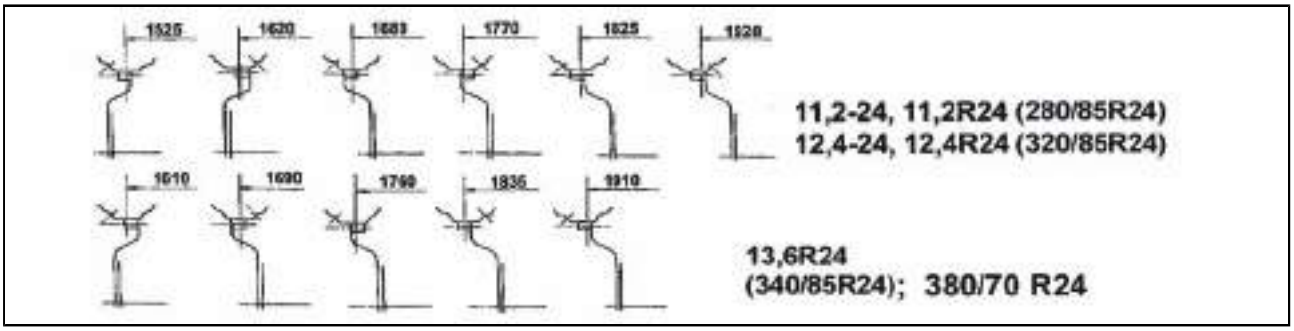

G503a_1

WHEEL TREAD CHANGE

Front wheels track of front drive axle in tractors equipped with non-removable discs

***Secure the tractor against motion first, heave the axle by a heaver and support. Tighten the nut of front wheels at a torque of 250* - 290 Nm.**

The change of wheel tracks is done by turning the wheel and mounting with rim offset to the inside, while the wheels are interchanged to keep the right direction of the tyre pattern with arrow to the front.

- Demount front wheels.
- Interchange the front wheels and mount with rim offset to the inside.
- Nuts tightening front wheels to be tightened at a torque of 250 - 290 Nm.
- After travelling the distance of 100 m with an unloaded tractor, tighten the nuts tightening the front wheels again to the prescribed torque.
- After loading the tractor, tighten the nuts tightening the front wheels after 3 Mh.
- After 10 Mh, retest the tightening of nuts fixing the front wheels.

	Disc wheel ET (mm)	Front wheel tracks in mm	
280/85 R24, 11,2 - 24, 11,2 R24,	-19	1678	1622
13,6R24	51	1538	1762
380/70 R24	-24	1688	1612
12,5/80-18	57	1526	-
380/70R24	15	1610	1690

WHEEL TREAD CHANGE

Setting wheel stops with front drive axle
Set the stops always with any wheel track change or tire replacement with front drive axle.
Wheel stops with front drive axle must be set so that there would be a distance of at least 50 mm between front drive axle tires and tractor with full lock and full axle swing around central pin.

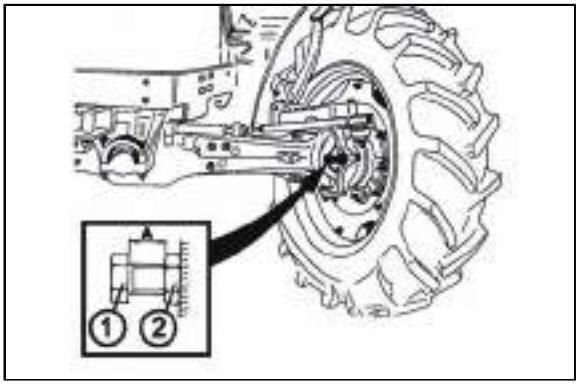

E502

Setting wheel stops with front drive axle check
1. Set full lock to one side and check that the distance between a tire and the nearest solid point on the tractor is at least 50 mm. Check both front tires.
2. Turn the steering to full lock to the other side and check according to point 1.
3. Heave one side of the front axle to the maximum swing (front axle leans against the bracket) and check according to point 1 and 2.
4. Hoist the other side of front axle to the maximum swing (front axle leans against the bracket) and check according to point 1 and 2.
The setting of stops (A) changes after the release of a nut (2) and unscrewing or screwing in a screw (1).

After the change in setting wheel stops with front drive axle, it is always necessary to check their setting according to points 1 to 4.

Front wheels toe-in
The value of toe-in of front wheels taken on the rim of a tractor:

- **With non-driven axle 2 to 6 mm**
- **With driven axle 0 to 4 mm**

'**S'** toe-in is given by the difference of measured values:
S = b - a.

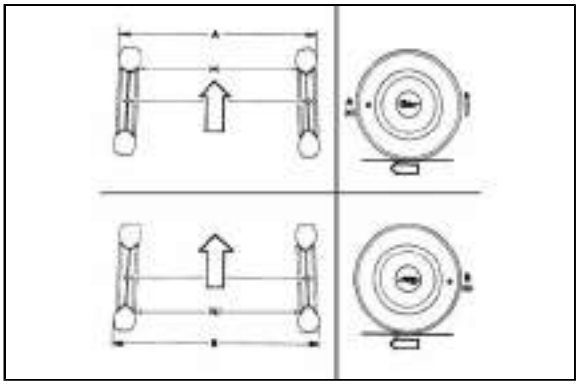
F_02_189

Before checking toe-in, it is necessary to check or adjust the clearance in front wheels bearings and inflate front tires to prescribed pressure.
The measurement of toe-in is done on wheel rims.

WHEEL TREAD CHANGE

Adjustment of toe-in of the wheels of the front driving axle

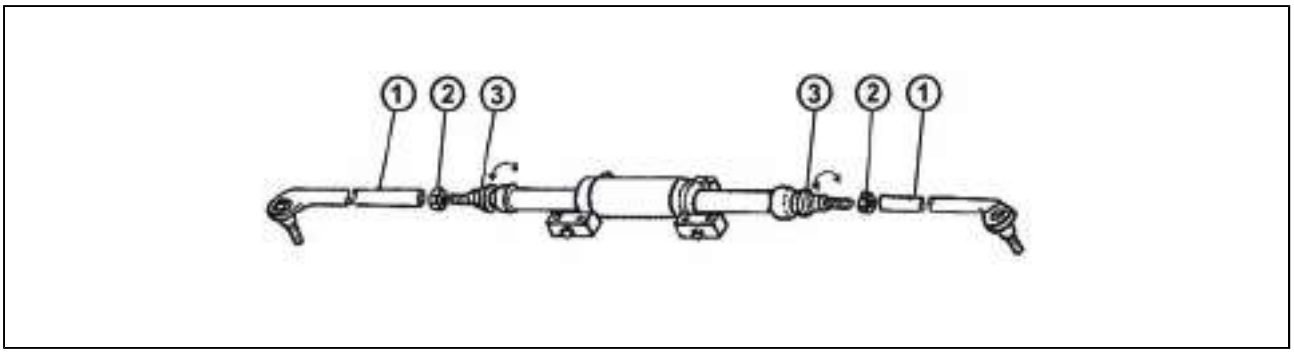

C507

Note: Tractors are in standard equipped with hydrostatic device.

- Set the wheel symmetrically with longitudinal axis of a tractor.
- Measure the distance between rims in the front on horizontal level of wheel axis. Mark the place of measurement.
- Travel forward with a tractor so that the marked places would be on horizontal level of rear wheel axis (turn by 180°) and remeasure the distance between marked places.
- Release locking nuts of ball joint heads (2) of connecting rods of devices in hydraulic cylinder.
- Adjust toe-in by turning the pin of ball joint (3). Do the adjusting symmetrically with both joints to keep the same lock of wheels to both sides (do the measurement on the sides of rims).
- Locking nuts of heads of ball joints (2), tighten with a torque of 122 - 136 N. Upper surfaces of heads must be (1) parallel.

Setting the wheel toe-in at tractors without front driving axle

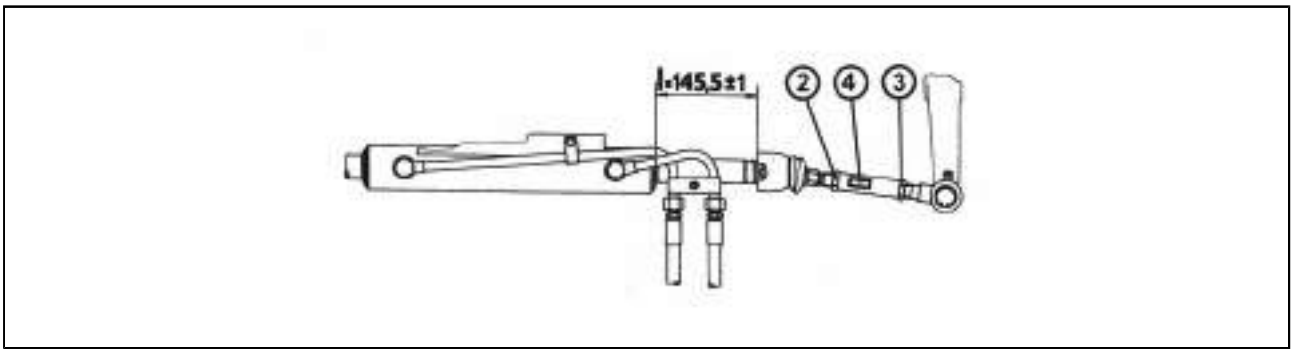

C506

Note: As standard, the tractors are provided with hydrostatic steering.

- Set the wheels symmetrically with the longitudinal axis of tractor.
- In the front in horizontal plane of wheel axes measure the distance between rims. Mark the measuring point.
- Drive the tractor so that the marked points would be in the rear in horizontal plane of wheel axes (turning by 180°) and again measure the distance between the marked points.
- Shift out the piston rod of the cylinder at 145,5 ±1.
- Loosen the nuts (2,3) and by turning the rod (4) adjust the toe-in at the required value (measure at the rime side).
- Tighten the lock nuts of the heads of ball joints by torque 122 - 136 Nm. Upper surfaces of heads must be parallel.

WHEEL TREAD CHANGE

Front drive axle fenders
Are on adjustable holders which can be set both horizontally (by relocating screws 'a' to different holes) and vertically (by relocating screws 'b' to different hole) based on requested wheel tracks and the kind of used tires.

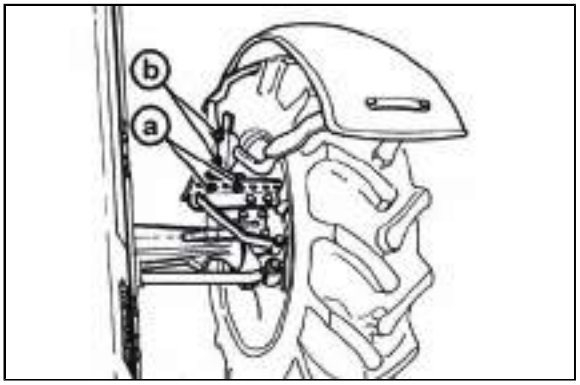

C508

Rear wheels wheel track

Gauges of the tractor rear wheels equipped with screwed footer discs

Used tires	Tire width in mm	Adjustable tread
12,4-36	315	1350 - 1800
13,6-36	348	1350 - 1800
14,9-28	315	1425 - 1800
14,9R28	378	1425 - 1800
16,9-28	429	1425 - 1800
16,9R28	429	1425 - 1800
16,9-30	429	1425 - 1800
16,9R30	429	1425 - 1800
480/70R30	479	1425 - 1800
18,4 -30	467	1500 - 1800
18,4 R30	468	1500 - 1800
16,9-34	429	1425 - 1800
16,9R34	429	1425 - 1800
480/70R34	429	1425 - 1800
18,4-34	467	1500 - 1800
18,4R34	467	1500 - 1800

WHEEL TREAD CHANGE

Rear wheel track change

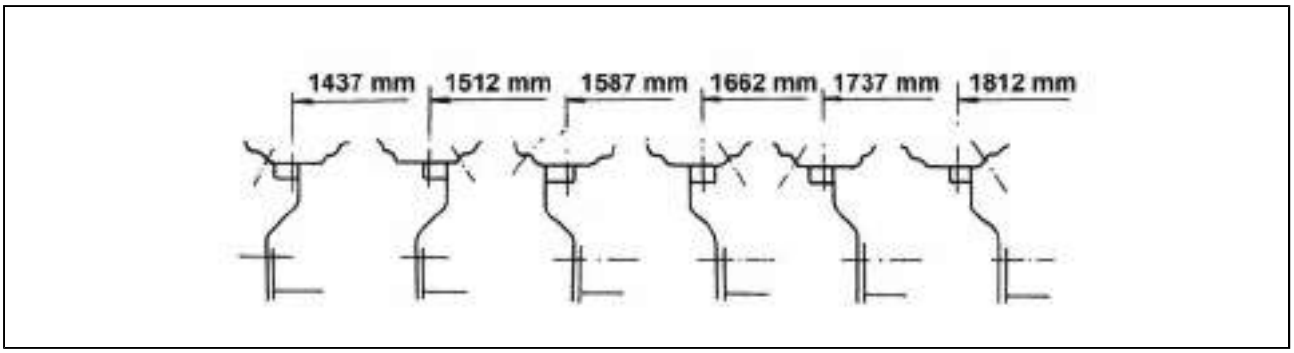

C509

The wheel track setting of rear wheels is done by the change of rim position and disc with a heave rear part of a tractor. It is necessary for wheels to spin freely.

Before heaving do not forget to lock the tractor against movement by making front wheels stable!

After the change of wheel track, tighten all the screws connecting the disc with a rim by a torque of 270 - 300 Nm and nuts of screws connecting a disc with wheel shaft with a torque of 400 - 470 Nm.

- Tighten the screws to a prescribed value after every release of foot joint.
- After travelling a distance of 100 m with an unloaded tractor retighten the joints again to a prescribed torque.
- After loading the tractor, tighten the joints after 3 Mh.
- Retest the tightening of disc nuts and foots of wheel rims after 10 Mh.
- Until you travel first 100 Mh, check the disc nuts and foot of front and rear wheels tightening often (at least 6 times in the first 100 Mh).
- Continue retesting the disc nuts and foot rims of front and rear wheels tightening always after working every 100 Mh.

The gauges of the tractor rear wheels equipped with solid discs

	Rear wheels track (mm)	
460/85 R34	1650	-
16,9-30	1580	-
480/70 R30	1576	-
460/85 R30	1576	-
600/65 R34	1650	-
420/85 R34	1576	-
540/65 R34	1650	-
19,5L-24	1590	-

ADDITIONAL WEIGHTS

Ballast weights are necessary to additionally load the tractor axles and to ensure manoeuvrability and stability of the tractor.

Weights in front of the bonnet mask

Combination of weights (pcs)	Weights (kg)	
4+1	**4**x50 + 66	**266**
8+1	**8**x50 + 66	**466**

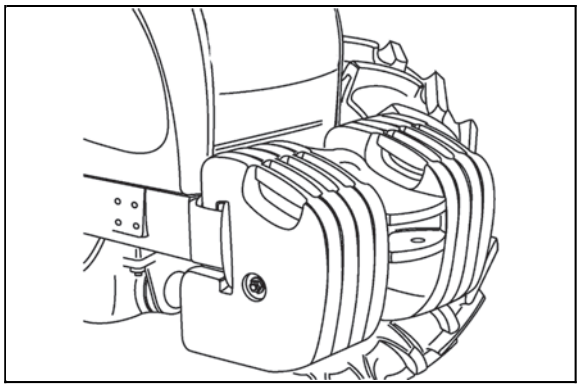

P11NE551

Weights of the front three-point hitch

Combination of weights (pcs)	Weights (kg)	
10	**10**x28	**280**

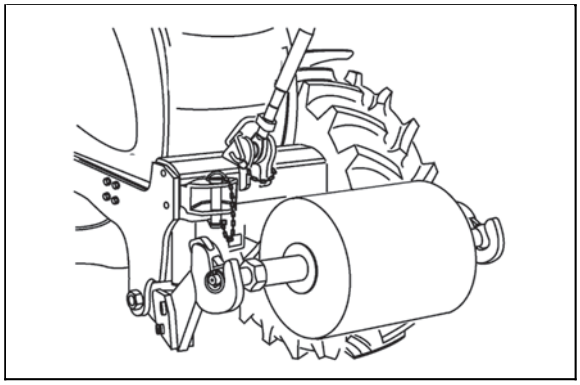

P11NE552a

Weights of rear wheels

A - Mounting of weights for rear wheel treads 1,350 to 1,500 mm

B - Mounting of weights for rear wheel treads 1,575 to 1,800 mm

Combination of weights (pcs)	Weights (kg)	
2+2	**2**x16 + **2**x30	**90**
2+4	**2**x16 + **4**x30	**150**
2+8	**2**x16 + **8**x30	**270**

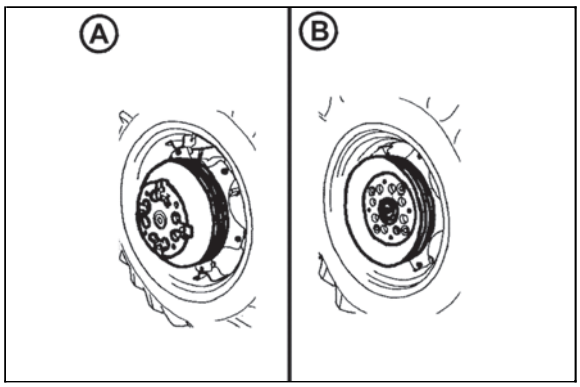

E553

ADDITIONAL WEIGHTS

Valve for filling tyre tubes with liquid

All inner tubes of rear wheels are provided with valves that allow their filling with a fluid if an extension is used.

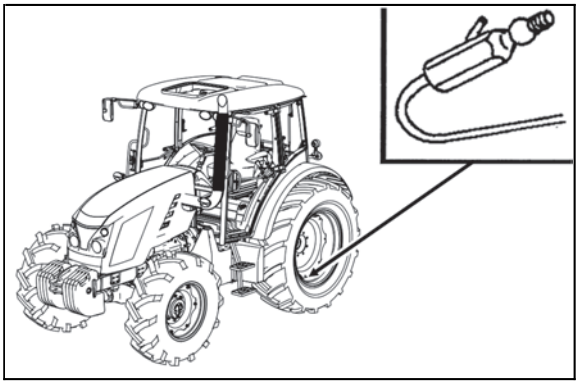

Tubeless tyres cannot be filled with any fluid! Only radial tubeless tyres can be filled with water for purpose of additional loading. Filling of tubes of the front wheel tyres and rear double wheels with a fluid is not permitted!

Chocking of front wheels

Before lifting of rear wheel do not forget to secure the tractor against any movement by chocking of front wheels!

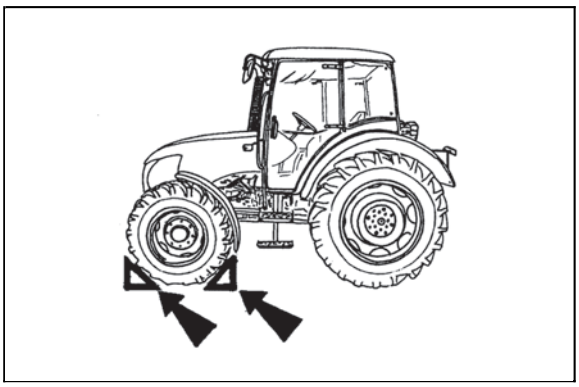

E555

Procedure of filling the tyres with liquid

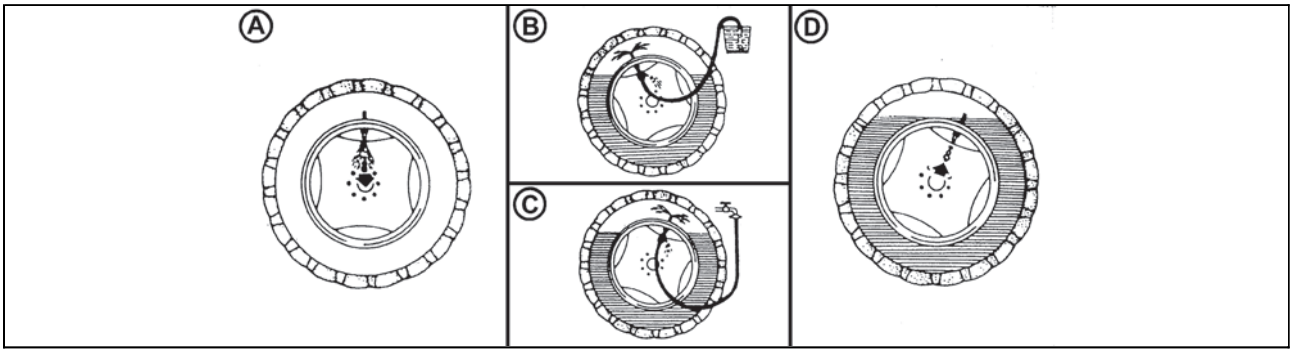

F226

1. Unload the tyre by lifting the tractor and turn it with the valve upwards (A).
2. Deflate the tyre and unscrew the valve insert.
3. Screw the adapter for water filling on and attach the liquid supply hose to it.
4. Fill the tyre with the prescribed quantity of liquid.
5. For the filling you can use a gravity tank (B) or you can fill the tyre under pressure (C).
6. Remove the hose and unscrew the adapter for water filling.
7. Screw on the valve insert and inflate the tyre to the prescribed pressure.
8. After inflating screw the protective cap on the valve.
9. Fill the other tyre in the same way.

Water must not freeze in a tyre!

ADDITIONAL WEIGHTS

Procedure of draining liquid from the tyres

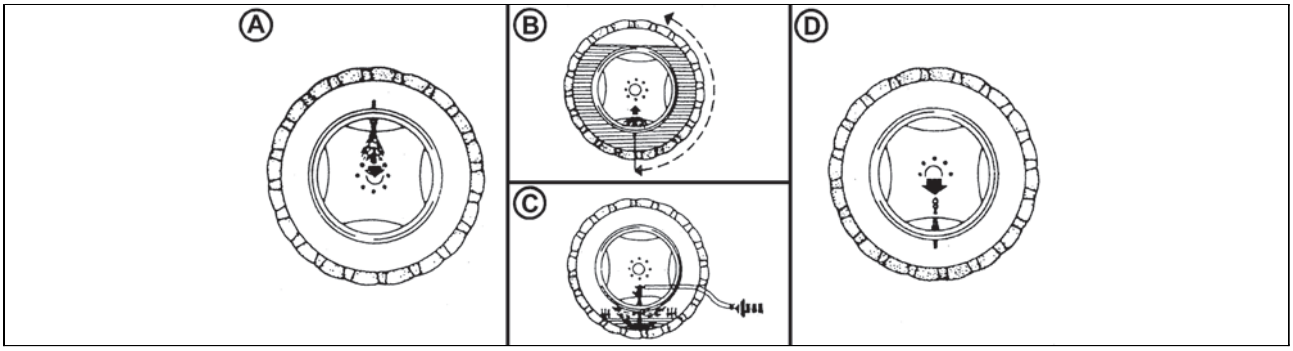

F227

1. Unload the tyre by lifting the tractor and turn it with the valve upwards (A).
2. Deflate the tyre and unscrew the valve insert; turn the wheel with the valve downwards.

During draining of liquid vacuum may occur in the tyre. Therefore, turn the wheel time after time to get the valve to the upper position (B).

3. Remove the rest of the liquid after screwing on the adapter for water filling by supplying pressurized air (C).
4. Blow out the liquid until it stops running through the tube of the air adapter.
5. Unscrew the adapter for water filling
6. Screw the air part of the valve back on and inflate the tyre to the prescribed pressure.
7. Screw the protective cap on the valve.
8. Drain the liquid from the other tyre in the same way.

Maximum liquid weight (kg) by tyre dimensions

Tyredimensions	12,4-36	14,9-28	16,9-28	16,9-30	480/70R30	16,9-34	18,4-30	18,4-34
Weight (kg)	160	190	215	240	280	250	337	345

Antifreeze solution for tyre filling

An antifreeze solution may only be used for filling tyres if you have purchases additional tubes! Caution, the tractor is equipped with tubeless tyres by the manufacturer!

Water for solution preparation	Calcium chloride $CaCl_2$	Hydrated lime	Solution density at 20° C	Freezing point approx.	Total volume	Added weight
(l)	(kg)	(kg)		(°C)	(l)	(kg)
45	11.8	0.21	1.13	-18	50	57
45	13.9	0.23	1.18	-25	50	59
45	15.4	0.25	1.21	-30	50	61

Solution preparation:

1. Dry calcium chloride $CaCl_2$ is added to water, never the other way round!

2. The solution is not dangerous, but it is necessary to work carefully with it. Remove spilt drops with clean water.
3. Before filling leave the solution to cool down. Observe the prescribed quantity of hydrated lime.
4. The solution must not get in contact with metal parts and the electric installation! The solution is not harmful for the tube valve.
5. The antifreeze solution with the above mentioned composition must not be used in the cooling system!
6. After draining dispose of the antifreeze liquid as special waste!

NOTES

ELECTRIC INSTALLATION

No additional interventions may be carried out on electric installation of the tractor (connection of other electric consumers) due to its possible overloading!
With repairs of electric installation pay special attention in particular to manipulation with the battery to avoid any contact of electrolyte with skin or clothing.

Basic service information

The battery must always be connected with the 'minus' pole to the ground and with the 'plus' pole to the alternator. If the battery is connected the other way round, it will destroy the whole semiconductor equipment of the alternator. When starting the tractor with the use of an auxiliary battery, do not forget to connect the terminals 'plus' to 'plus' and 'minus' to 'minus'. If you replace a part of the charging circuit, disconnect the battery from the tractor ground (-) with the battery disconnector. This way you will avoid accidental short-circuits on the terminals.

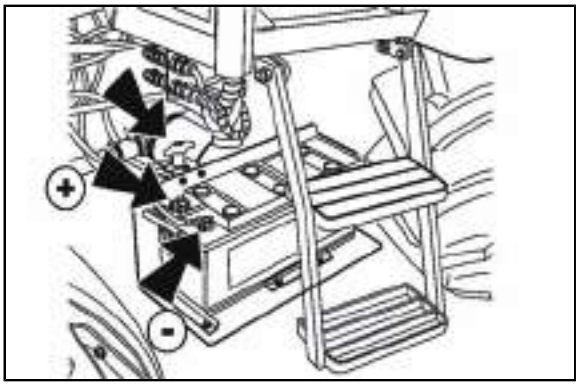

E602

In case of any handling or repair of the started motor the minus pole of the battery must be disconnected and all the shifting levers, incl. the PTO shifting lever, must be in the neutral position (do not forget to check whether the locked PTO switches on the right cabin pillar are off as well to prevent spontaneous start and endangering of the service person's life).

It is forbidden to start the engine by short-circuiting the starter motor terminals. Only start the tractor from the driver's seat!

Accumulator battery

The battery (1) is installed on the left side, under the cabin.
The battery disconnector (2) in installed on the left side at the batter.
a - Battery connected
b - Battery disconnected

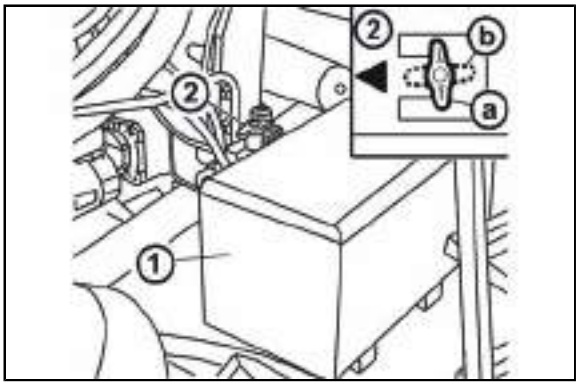

E603

In case that the tractor is put out of operation for a longer period, it is recommended to disconnect the battery using the battery disconnector. It is necessary to charge the battery at least each three months due to its self-discharging.

Accumulator battery maintenance

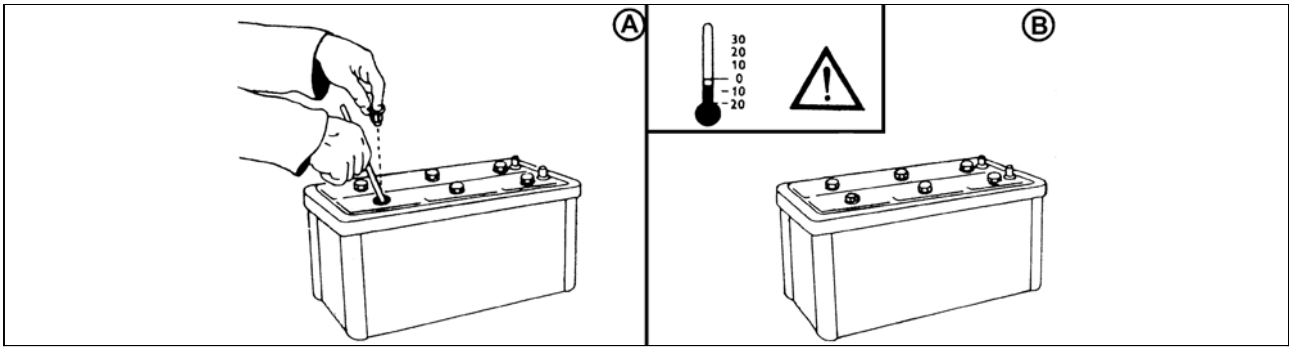

F298

Keep the accumulator battery clean and properly fixed to the vehicle. However, the fixing device must not deform the battery case. In the case of polypropylene batteries the electrolyte level must not be below the minimum mark indicated on the case.

Only add distilled water to the battery!
1. When working with the battery first read the attached manual.
2. During work with the battery protect your eyes with goggles or a safety shield!
3. The electrolyte is a caustic substance; therefore, handle it with proper care.If your skin or clothes get stained by electrolyte, wash the skin or clothes with water and neutralize them with soap.
4. During charging hydrogen is released from the electrolyte on the electrodes. Hydrogen mixed with the air forms an explosive mixture. Therefore, it is prohibited to handle open fire near the battery during charging.
5. An explosion may also be caused by a spark created on the disconnection or release of a terminal when the charging circuit is on.
6. Keep the battery out of reach of children!
7. A discarded battery is dangerous waste for the environment - when buying a new battery hand the old one over to the dealer, who will dispose of it free of charge.

Alternator

Charging is monitored by the red indicator on the combined dashboard instrument.

During repairs of the tractor by electric welding all the conductors must be disconnected from the alternator. Protect the '+B' conductor from a short-circuit.

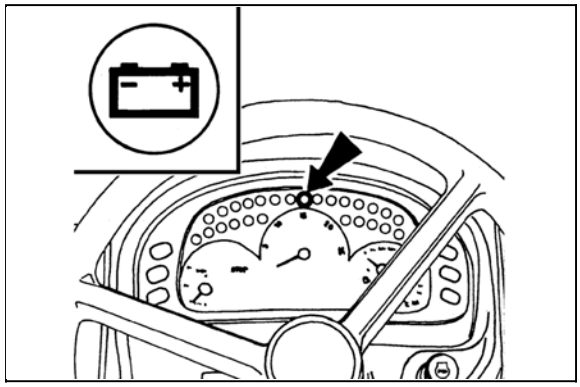

E605

Alternator maintenance

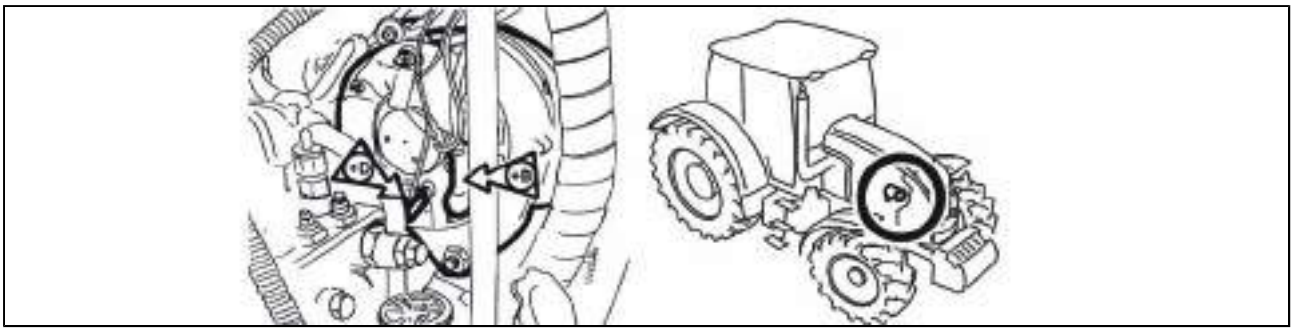

E606a

When washing and cleaning the tractor protect the alternator from penetration of water or diesel fuel! During operation the alternator must not be disconnected from the battery! The alternator must never be put in operation without load, i.e. with the conductor disconnected from the '+B' terminal and the '+D' terminal connected. Such a condition may induce an extremely high voltage when the engine speed is increased, which would destroy the semiconductors! Never short-circuit any alternator terminal during operation! The alternator must not be additionally excited. Such an intervention would damage the semiconductors. Ensure perfect electric connection of the alternator terminals and proper grounding of the alternator! Poles of the alternator may not be re-versed even for a short time!

Charging control

Charging control has two functions.
If there is:
1 - **red** light with the engine running, it is a charging failure,
2 - **orange** light signalizes a state when electrical installation of tractor has such intake that the performance of alternator is insufficient for charging the accumulator.

If this condition occurs, turn an appliance off and the control is off.
The engine operation with a lit orange charging control can result in accumulator depletion.

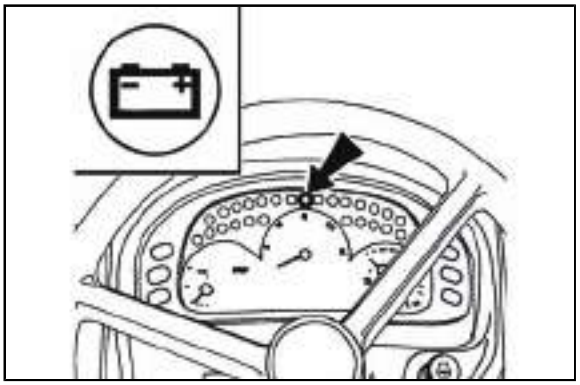

E605

Fuse box

Is accessible after removing the left cover of steering console.
Fuses (1) are shear and when replacing them, it is necessary to keep prescribed values of the fuse. With repeated chopping, find the nearest garage.
Ignition fuse (2) is strip of the size of 80 A.
Heating strip fuse (3) of the size of 30 A.

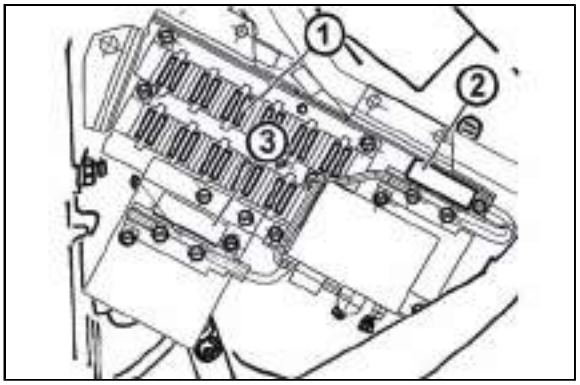

F13BN027

Lay out of fuses in the fuse box

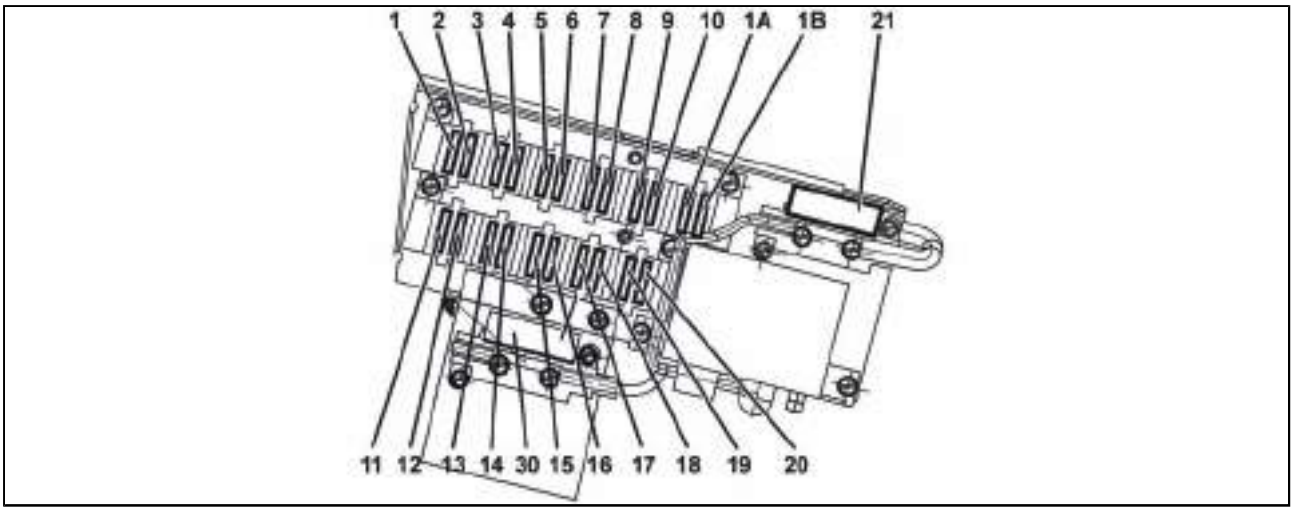

F13BN028

Pos.	Fuse rating	Protected system
1	15A	Interrupter of warning lights, stop lights
2	15A	Horn, beacon
3	15A	Control of front driving axle, control of differential lock, dashboard power supply,
4	15A	High beams with indicator
5	15A	Left marker lights, dashboard illumina- tion, registration plate illumination
6	15A	Right marker lights, rear working headlight with indicator
7	15A	Right low beams, fog light + indicator
8	7,5A	Left low beams, indicator of lights in the mask/on the roof of the tractor
9	15A	Working lights in the front mask
10	3A	Front VH Zuidberg
1A	15A	Diesel particle filter
1B	20A	
11	15A	Front and rear wipers, washer, radio '15'
12	20A	Heating fan, radio '30'
13	15A	Recirculation, cigarette lighter
14	7,5A	Air-conditioning (compressor clutch)
15	15A	mirror heating
16	15A	rear window defroster
17	15A	Driver's seat compressor
18	20A	3-pin socket
19	15A	Front working headlamps on the roof
20	15A	Rear working headlamps on the roof
21	80A	Heating plug
30	30A	Heating ventilator

Checking the adjustment of the front grill headlights

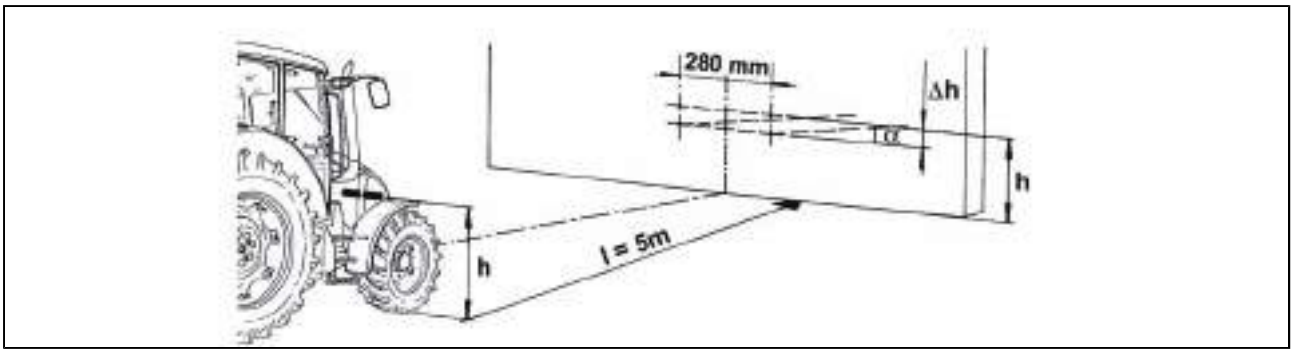

F_02_145

During a check on a test wall the tractor must stand on a level surface and the tyres must be inflated to the prescribed pressure. The basic vertical setting is 3.5% at the shipping weight of the tractor.In the horizontal direction the light beams must be parallel with the longitudinal axis of symmetry of the tractor.

l	-	distance of the test wall from the headlight (5 m)
h	-	height of the headlight centre above the road surface
Δh	-	headlight inclination (-3.5 %) to the distance of the test wall = 17.5 cm
α	-	raising of the outline of an asymmetrical headlight (15%)

Adjusting the front grill headlights

The adjustment is performed simultaneously with all the screws for the vertical and horizontal direction of the beam. In the adjusted condition all the springs of non-adjusting screws must be pre-tensioned. Each headlight is adjusted separately. The lamps are replaced by removing from the rear side of the reflector.

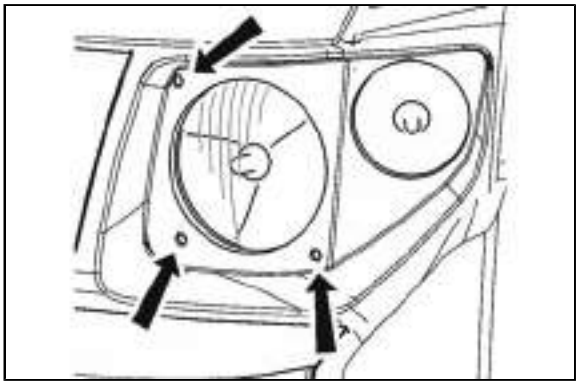

F12N00126

Checking the adjustment of the cab roof headlights

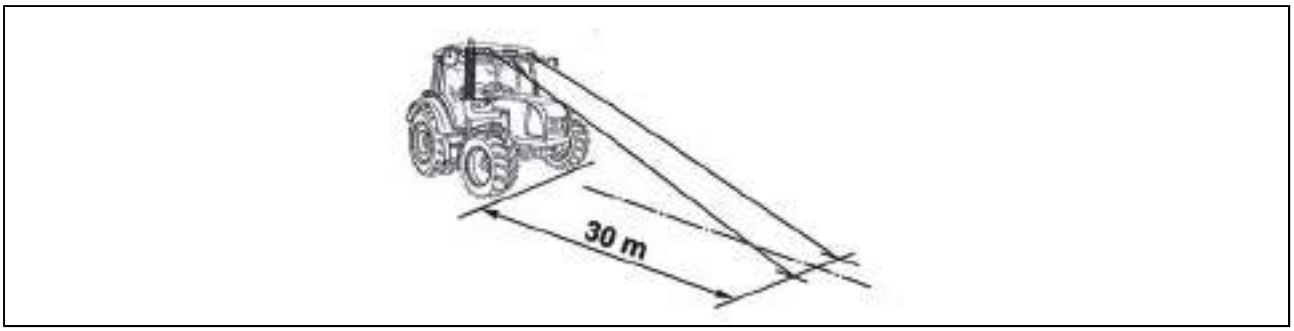

G611

In the vertical direction there must not be any point of illuminated area lying on the road surface plane to the left from the longitudinal vertical plane passing through the headlight centre further than 30 m from the front outline of the tractor.
In the horizontal direction the light beams must be parallel with the longitudinal axis of symmetry of the tractor.
Check the adjustment of the headlights at the shipping weight of the tractor. The front roof headlights may only be used when driving on public roads when the tractor carries a frontally attached machine or implement covering the main headlights (in the tractor grill).

List of lamps

Pos.	Lamp position	Voltage	Power	Socket	Note
1	Main headlights H4	12 V	55/60 W	P 43t	
2	Roof low beam headlights H7	12 V	55 W	PX26d	
3	Front combined headlights				
	Turn signal lights P21W	12 V	21 W	BA 15s	
	Position lights R5W	12 V	5 W	BA 15s	
4	Working and ploughing lights	12 V	65 W	PGJ19-5	
5	Rear combined lights				
	Tail lights and brake lights	12 V	5 /21W	BAY 15d	
	Turn signal lights	12 V	21 W	BA 15s	
6	Registration no. lighting C5W	12 V	2x5 W	SV 8,5-8	
7	Dashboard, switches	12 V	2 W	W2x4,6d	illumination
8	Cabin lighting	12 V	5 W	SV 8,5-8	All-glass without base
9	Heating panel lighting	12 V	1,2 W	W2x4,6d	

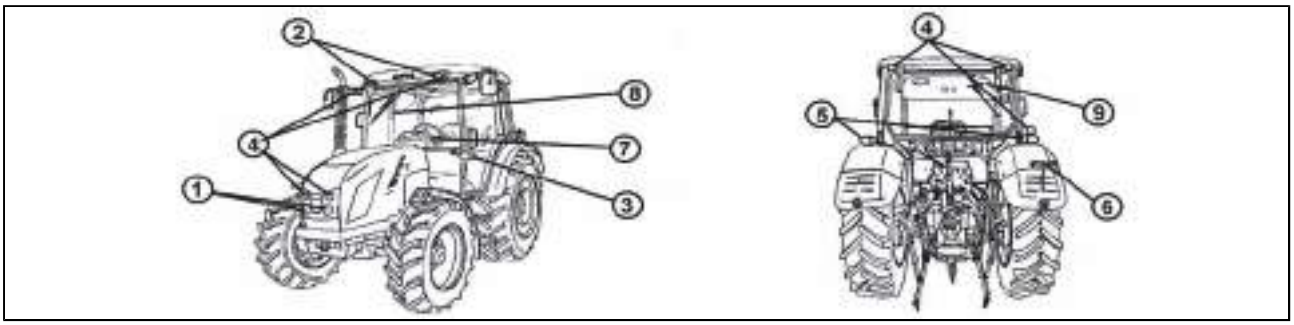

G612

TRACTOR MAINTENANCE

Service inspections
Service inspections are performed as follows:
The first service inspection at the state of the engine hour counter of 100 EH maximum, but not later than 6 months after commissioning of the tractor. The second service inspection after covering another 400 EH (at the state of the engine hour counter of 500 EH maximum) but not later than 12 months after the first service inspection. Next service inspections always after covering another 500 EH but not later than 12 months after the previous service inspection. The service inspections are a part of tractor maintenance. The services authorized by Zetor will provide professional performance of service inspections according to the manufacturer's instructions.

Steps performed daily before the start of work

Before starting the engine
Check the oil level in the engine
Check the level of cooling liquid and tightness of connections of the cooling system
Check the quantity of oil in the tank of the hydrostatic steering circuit
Check the quantity of the brake liquid and check the liquid brakes for leaks
Check the oil quantity in the gearbox and final drive housing
Check the air pressure in all tyres
Check the tightening of wheels
Check the condition of hitching and attaching equipment

After starting the engine
Check the engine lubrication function (indicator)
Check the charging function (indicator)
Check the steering function (indicator)
Check the function and tightness of the steering circuit
Check the function and efficiency of the tractor brakes
Check the function and efficiency of the brakes of the trailer or semi-trailer

Steps performed every 50 hours of work
Lubrication of the tractor according to the lubrication schedule
Inspection of fouling of the cabin filter elements

Steps performed every 100 hours of work
Steps performed every 50 hours of work
Cleaning of radiator elements with compressed air
Maintenance of dry air cleaner (depending on signal from the pollution indicator)
Check of amount of oil in gearbox and axle driving box
Check of amount of oil in rear axle portal
Check of amount of oil in front output shaft gearbox housing
Check of amount of oil in reducers and front driving axle housing
Discharge of condensate from air reservoir
Cleaning and application of a lubricating grease thin layer on accumulator battery terminals

Steps performed every 500 hours of work

Diesel particle filter maintenance
Steps performed every 100 hours of work
Check of Vee belt tension
Check of clearances in the whole hydrostatic steering system
Check of front axle pin clearance
Check of adjustment of coupling and brake pedal clearance
Check of foot brake and handbrake function
Check of hand coupling function
Check of trailer brake function
Check of air-pressure system impermeability and function
Check of driver's seat function, lubrication of movable parts with grease

TRACTOR MAINTENANCE

Steps performed outside the interval of 500 hours of work

in a new tractor or tractor after a general overhaul								
hour counter reading	100	500	1000	1500	2000	2500	3000	subsequently after every...hours
Check and adjust valve play		o				o		2000
Check the opening pressure of injectors and the function of injection nozzles							o	3000
Diesel particle filter maintenance							o	3000
Replace the hydrostatic steering hoses								every 3500 hours or once every 4 years
Check the toe-in of the front wheels					o			2000

Further actions for tractors without the front driving axle performed outside the interval of 500 Mth (hours of work)

Condition of engine hour-meter	In a new tractor or a tractor after overhaul						Always after...hours of work
	500	1000	1500	2000	2500	3000	
Refilling of lubricating grease in front wheel hubs (max.1/3 of the wheel hub space)			o			o	1500
Check of front wheel bearing clearance			o			o	1500

Monthly performed actions

If the tractor is equipped with the air conditioning system that has not been used, it is necessary at least once a month to switch for a minimum of 5 minutes at ambient temperature higher than 4°C.

Filling and filter replacement

In a new tractor or a tractor after overhaul						
Condition of engine hour-meter	100	500	1000	1500	2000	Always after....hours of work
Replacement of engine oil	o	o	o	o	o	500
Replacement of engine oil filter cartridge	o	o	o	o	o	500
Replacement of fuel filter cartridge		o	o	o	o	500
Replacement of air filter cartridge			o		o	1000
Replacement of air filter safety cartridge					o	2000
Replacement of heating filter cartridge						After every 1000 Mth or 2 years
Replacement of coolant						After every 2 years
Replacement of brake fluid						After every 2 years
Replacement of oil in gearbox and axle drive				o		1500
Replacement of oil in rear axle portals				o		1500
Changing suction filter (hydraulic pump suction filter)	o	o	o	o	o	500
Chaning insertion of oil cleaner	o	o	o	o	o	500
Replacement of oil in front driving axle housing	o		o		o	1000
Replacement of oil in front driving axle reducers	o		o		o	1000
Replacement of hydrostatic steering oil				o		1500
Replacement of hydrostatic steering filter cartridge				o		1500
Replacement of oil in front output shaft housing and cleaning of oil filter screen		o	o	o	o	500

Fuels, coolants and lubricants used - amounts

Name	litres
Brake fluid	0,5
Coolant	
Coolant without cabin	19
Coolant with cabin	20,5
Oil in engine	10
Oil for hydrostatic steering	2,5
Oil for front driving axle housing	5,5
Oil for front driving axle planet reducers	2x0,6
Oil for front driving axle planet reducers equipped with brakes	2x1,7
Oil for portal	2x1,9
Oil for gearbox and axle drive	59
Oil for front output shaft gearbox	2,7
Fuel	124/150

* - In tractors without the front driving axle the amount of oil should be by 2 litres lower. If the tractor works on a slope, filling should be increased by about another 7 litres oil. This should also apply to aggregation with machines connected with the hydraulic outside circuit.

The manufacturer does not take responsibility for any damages caused by the usage of service fillings that do not comply with requirements stated in this service manual.

ZETOR service fillings
To maintain best operational characteristics of your tractor, original operational **Zetor** fillings are recommended to be used.

Motor oils
Engine oil **Zetor 15W40 L-SAPS**

Oil to gear systems of tractors
(gearbox with final drive housing, portals of the rear axle)
Oil for gearing mechanisms of tractors **ZETOR 80W**

Oil for the front driving axle
Oil for the front axle **ZETOR LS 80W**

Oil for the hydrostatic steering of the tractors
Hydraulic oil **ZETOR HM 32**

Specification of oils for Zetor engines equipped by diesel particle filter

Classification ACEA	Viscosity class SAE	Performance class API
E9/E7	15W-40	API CJ-4/SM

Specification of oil for tractor transmission devices

Viscosity class SAE	Performance class API
80W	GL-4

Specification of oil for the front driving axle

Viscosity class SAE	Performance class API
80W 80W-90 10W - 30	GL-4 / GL-5

Use oils with additives for the limited slip differential.

Specification of oil for the tractor hydrostatic control system

Specification DIN
51524 HLP

Other recommended service fillings tested on Zetor tractors

Oils for Zetor engines which are equipped with diesel particle filter

Oil marking	Viscosity class SAE	Performance class API
MOGUL DIESEL L-SAPS	15W-40	API CJ-4/SM

Front PTO oil

Manufacturer	Oil designation
Shell	Donax TX
BP	Autran DX III
	Fluid 9
Esso	ATF E 25131
Castrol	Transmax S
Elf	Elfmatic G2 Syn
	Elfmatic G3
FINA	Finamatic HP
	Finamatic S6726
Mobil	Mobil ATF
Texaco	Texamatic 7045
Valvoline	ATF Dextron II-E
Beverol	Dextron II-E
	(Fina)matic HP
JD	Hygard JDMJ 20C
Total	Fluide AT42
	Fluidematic Syn
MOL	ATF 3G

Oils for tractor transmission gearing

Manufacturer	Oil designation	Viscosity class SAE	Performance class API
Shell	Shell Donax TD	80W	GL-4
	Shell spirax GX	80W	GL-4
Aral	EP 80	80W	GL-4
	Fluid HGS	80W	GL-4
	Super Traktoral	10W - 30	GL-4
Esso	Torque Fluid 62	80W	GL-4
Paramo Pardubice	Mogul Trans 80	80W	GL-4
	Mogul Traktol UTTO/EKO	80W	GL-4
	Gyrol - UTTO	80W	GL-4
	Gyrol 80W	80W	GL-4
ÖMV	Austromatic HGN	80W	GL-4
	Gear Oil EC 4	80W - 85	GL-4
	Austrotrac	10W - 40	GL-4
	Austrotrac	10W - 30	GL-4
Fuchs	Titan Hydramot 1030MC	10W - 30	GL-4
	Renolin G 100	80W	GL-4
MOL	Farm NH Ultra (UTTO)	80W	GL-4
ORLEN OIL	Hipol® 6	80W	GL-4

Oil for the front driving axle

Manufacturer	Oil designation	Viscosity class SAE	Performance class API
Shell	Spirax AX	80W - 90	GL-5
Aral	Fluid HGS	80W	GL-4
Agip	Rotra Multi THT	80W	GL-4
Esso	Torque Fluid 62	80W	GL-4
Fuchs	Titan Supergear	80W - 90	GL-4/GL-5
	Titan Hydramot 1030MC	10W - 30	GL-4
	Titan Renep 8090MC	80W - 90	GL-4/GL-5
ÖMV	Gear Oil LS	85W - 90	GL-5
MOL	Hykomol K 80W-90	80W - 90	GL-5
ORLEN OIL	Platinum Gear 80W-90	80W - 90	GL-5

Oil for the hydrostatic steering of the tractors

Manufacturer	Oil designation	Classification
Shell	TELLUS DO 32	HLP DIN 51524
Aral	Vitam DE 32	HLP DIN 51524
Fuchs	RENOLIND10VG32	HLP DIN 51524-2
ÖMV	Hyd HLP 32	HLP DIN 51524
PARAMO	MOGUL H-LPD 32	HLP DIN 51524
	MOGUL HM 32	HLP DIN 51524
MOL	Hydro HV 32	HVLP DIN 51524-3
ORLEN OIL	Hydrol L-HM 32	HLP DIN 51524-2
	Hydrol L-HM 46	HLP DIN 51524-2

Plastic lubricant for the tractor

Type	Classification
Shell retinax HD2	DIN 51825 KP 2 K-20
MOGUL LA 2	ISO 6743/9 CCEB 2/3, ISO - L - XBCEA 2
MOGUL LV 2M	ISO 6743/9 CCEB 2/3
ÖMV signum	DIN 51825-K 2 C-30
MOL	Liton LT 2EP
ORLEN OIL	Liten® Premium ŁT-4 EP2

Hydraulic brake liquid for the tractors

Type	Classification
Shell Donax YB	SAE J 1703, ISO 4925
Synthol 205	PND 31-656-80, ISO 4925, SAE - J 1703
Fuchs Stopred	SAE - J 1703
Brake Fluid DOT 4	ISO 4925, SAE - J 1703
EVOX DOT 4+	ISO 4925/4 SAE - J 1704
	CAUTION! 1. *The liquid is not designed for arctic conditions!* 2. *Replace the brake liquid once every two years regardless of the number of hours of work!* 3. *Liquids of the same classification can be mixed together.*

Liquid for the cooling system of the tractors

FRIDEX - STABIL, FRIDIOL 91 or FRICOFIN S and demineralised water in the proportion of 1:1.5 (replenish the mixture in this proportion).
Antifreeze liquids for replacement abroad must contain anti-corrosion additives protecting all materials (incl. rubber and head gaskets) of the cooling system of the engine.

CAUTION!
1. *Water without an antifreeze mixture must not be used in the tractors!*
2. *Replace the cooling liquid after two years of operation. The FRIDEX - STABIL and FRIDIOL 91 liquids can be mixed together.*
3. *Miscibility with liquids of other manufacturers has not been verified!*

Fuel for Zetor engines which are equipped with diesel paricle filter

Diesel complies with EN 590 standard
IMPORTANT NOTE! ***By using motor oil with elevated sulphur content, the service life of diesel particle filter can be significantly reduced.***

Tractor greasing plan

Safety instructions for lubrication of the tractor

- The tractor maintenance may be performed only by the trained personnel thoroughly familiarized with operational and safety principles.
- During maintenance of the tractor wear appropriate (specified) personal protective equipment (occupational footwear, protective gloves, safety goggles, etc.).
- Prior to starting the work, secure the tractor against movement using manual brake.

Lubrication must be performed only when the engine is at standstill!

Solid front drive axle

Pos. No.	Name	Number of lubr. points
1	Kingpins	4
2	Central pin	2
3	Connecting shaft coupling	2

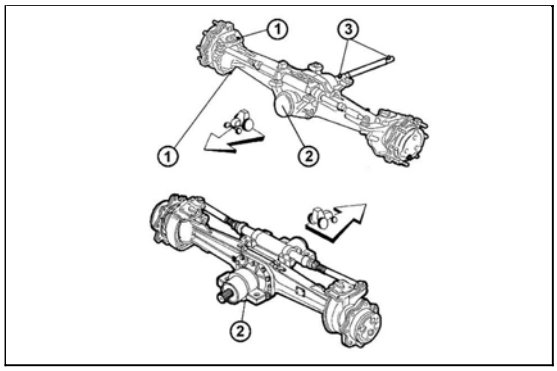

8P

Front non-driving axle

Pos. No.	Name	Number of lubr. points
1	Kingpins	2
2	Central pin	2

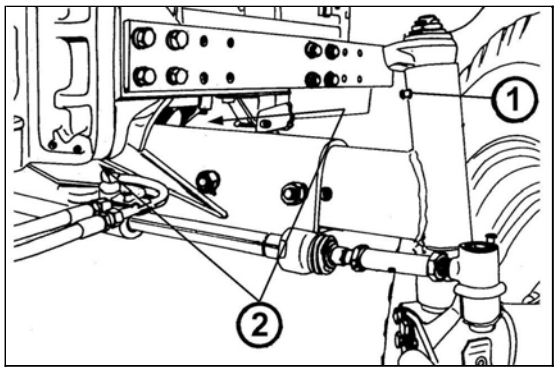

1P

Hitch for a single-axle semi-trailer

Pos. no.	Identification	No. of lubrication points
1	Hook pin bearings	0 to 4 (by version)

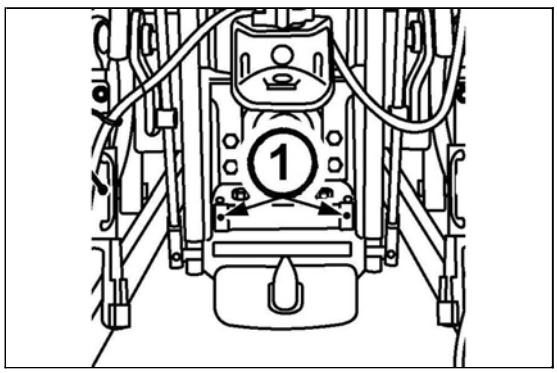

01F

Front three-point hitch

Pos. no.	Identification	No. of lubrication points
1	Pins of cylinders of the front three-point hitch	4

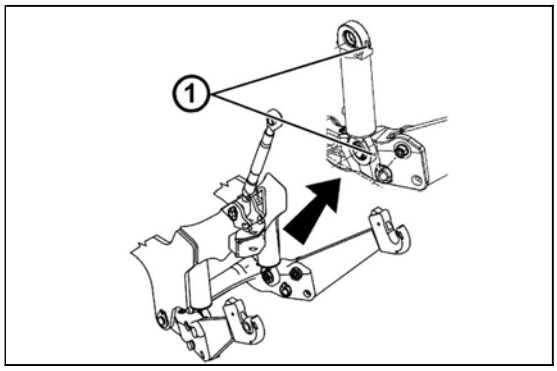

02F

Three-point hitch

Pos. no.	Identification	No. of lubrication points
1	Pins of auxiliary hydraulic cylinders	2
2	Lifting draw-bars	2

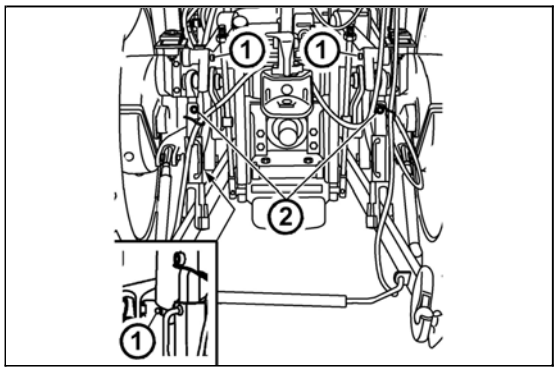

21

Hitch mouth for a trailer

Pos. no.	Identification	No. of lubrication points
1	Hitch mouth for a trailer	1

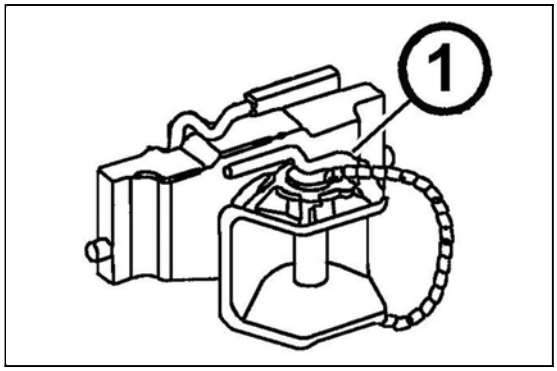

5P

Upper linkage bracket

Pos. No.	Name	Number of lubr. points
1	Pins of upper linkage bracket	2

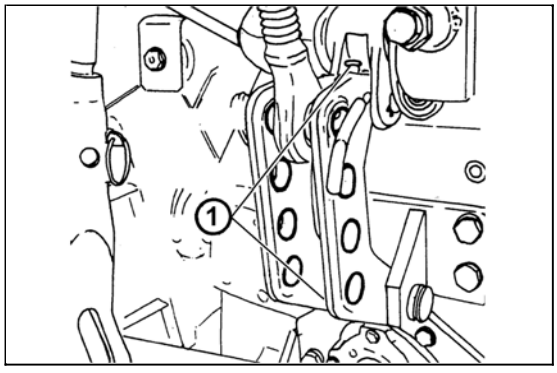

6P

Pin of coupling switching off

Pos. No.	Name	Number of lubr. points
1	Pin of coupling switching off	2

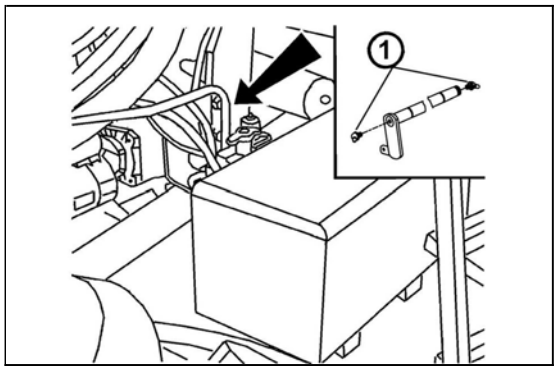

7P

Reversion lever pin

Disassemble the left side cover of the control panel.
Disassemble the lock ring (1) of the reversion lever pin.
Partly push out the reversion lever towards the instrument panel.
Lubricate reversion lever pin with lubricating oil.Push the reversion lever back and secure with the lock ring (1).

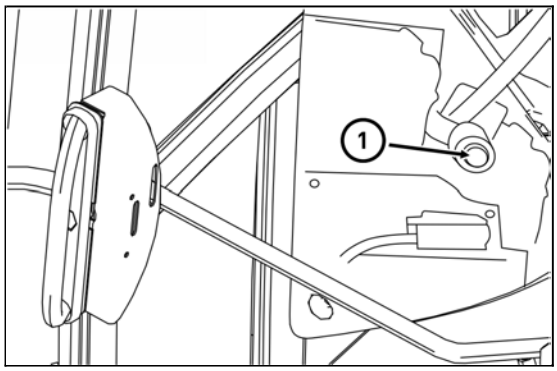

P15N066

Technical maintenance of the tractors after a general overhaul of the main groups

Run in the tractor after a general overhaul in accordance with the instructions for running in a new tractor.
Perform the maintenance in the same way as with a new tractor.

NOTES

MAINTENANCE INSTRUCTIONS

Most of operations of planned maintenance may be carried out by the driver or other user of the tractor.
In case you do not have sufficient technical equipment, let the difficult operations carried out by a specialised repair shop.

All works, connected with cleaning, lubrication and adjustments of the tractor or coupled mechanisms may only be carried out after stopping of the engine and other movable components except checks of brakes, recharging and hydraulic system.

Front bonnet opening

Opening the bonnet:
Unlock the bonnet by pulling the draw bar (1) in the direction of an arrow, grip where the arrows are and heave.
The bonnet is locked in the heaved position by a gas-fluid prop.

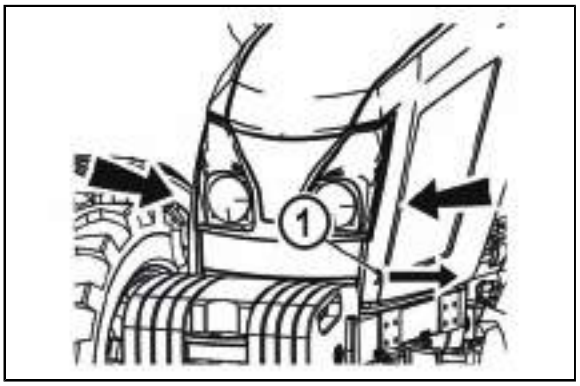

NM13N107

Closing the bonnet:
Pull the bonnet by means of a belt, grip where the arrows are and snap in the downward direction so that the lock of bonnet snaps down.

Rapid closing of the bonnet may damage filaments of bulbs in headlights in the front mask.

Checking oil levels in engine

Check daily before starting the operation with the tractor standing horizontally. Engine oil dipstick (1) and filling hole (2) are placed on the rights side of the engine. Unscrew the dipstick (1), wipe off with a cloth and screw back in. When you unscrew the dipstick again, the level must not drop below the bottom gauge. If necessary, refill oil by a filling hole (2).

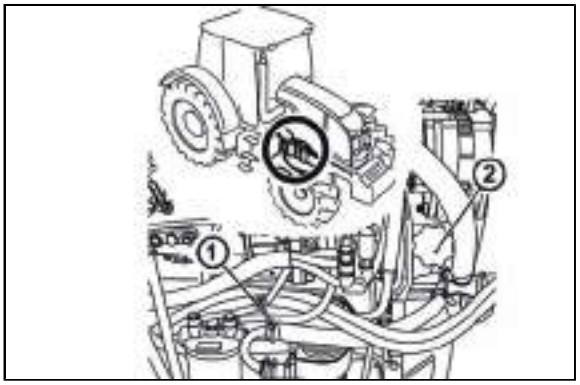

X903

Draining oil from engine

1. unscrew the drain plug (1), best immediately after terminating the drive or after heating the engine to working temperature
2. drain oil
3. clean the drain plug
4. screw the drain plug (1) back in

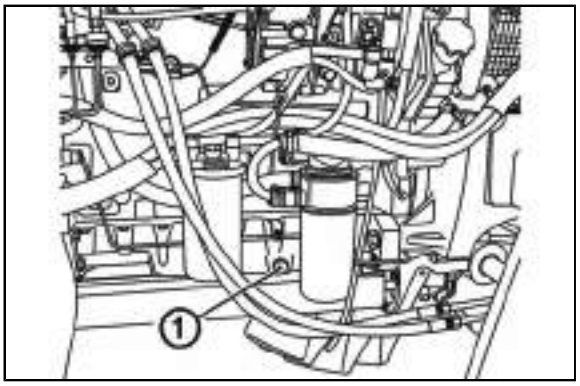

E703

Replacing full-continuous motor oil filter

To be done with every oil replacement in engine. Before you screw in a new filter, clean the sealing surface of the body (1) and the filter (2). Grease rubber sealing with oil, with which you will fill the engine and tighten the filter with your hand. After the sealing seats on the sealing of the block, tighten the filter for a 3/4 to 1 and 1/4 of a revolution. Check the tightness again after starting the engine.

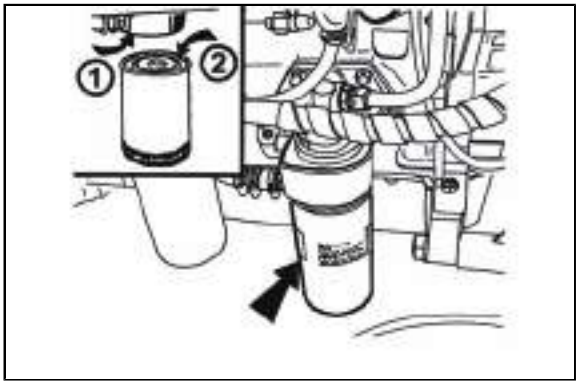

E704

Pouring oil to engine

Pour the set amount of motor oil engine by filling hole (2), start the engine and allow it to run for 2 - 3 minutes with engine revolutions of 750 - 800.
After stopping the engine and settling the level recheck the amount of oil with a dipstick (1) and check the tightness of filter, drain plug (3) and other joints.

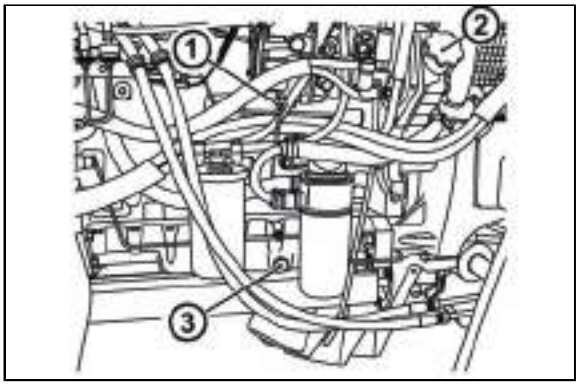

E705

Fuel filter element replacement

Before you replace fuel filter, place a suitable vessel under the engine for catching dripping fuel from the filter.

1. release the nut (1)
2. unscrew bulb (2)
3. clean the bulb and replace the filter element
4. check proper positioning of bulb sealing
5. do the bulb back assembly
6. do fuel system venting

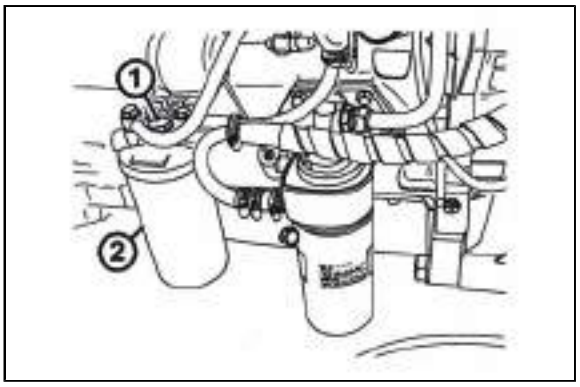

E706

Fuel system venting

Before you vent, place a suitable vessel under the engine to catch dripping fuel from the filter and injection pump.

1. by several heaves of a manual control of feeding pump (1) pressurize the fuel system
2. release the screw of branch pipe of fuel feeder to filter (2) and allow the fume to escape
3. tighten the screw (2) and repeat the procedure to the moment when a clear fuel starts flowing smoothly from the filter

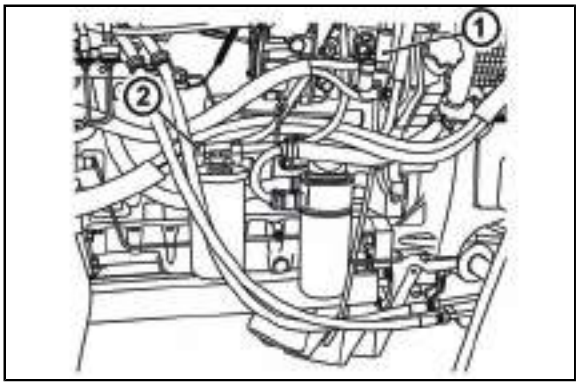

E707

4. vent injection pump in a similar procedure
5. vent with a screw (3) placed on the body of the pump

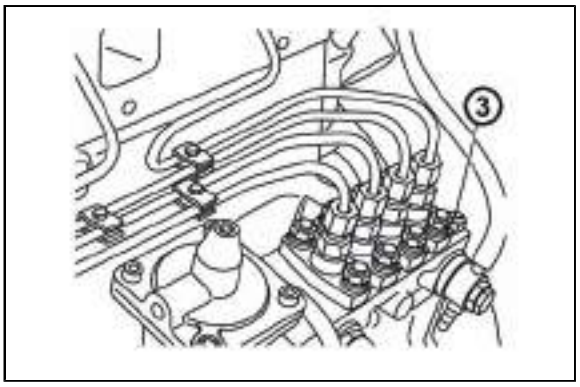

E708

Dry air filter maintenance - pollution indicator
Filter maintenance needs to be done after pollution signalization.
The indicator is accessible after opening the front bonnet of the tractor. It is placed on the left side of air cleaner near bend of sucking pipeline.

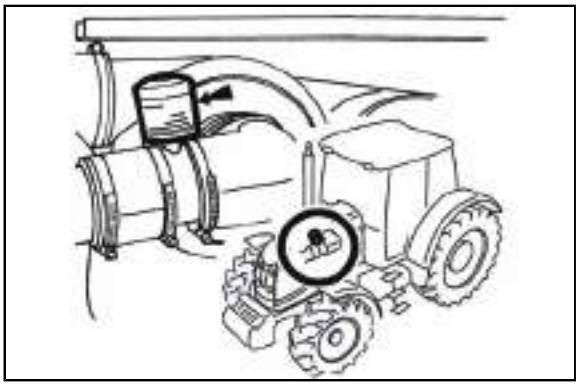

G710b

Contamination indicator function
The state of air filter pollution is signalized by the position of driver (1) in indicator window. If the driver (1) reaches a red box with a label service (2) it is necessary to do dry air filter maintenance.

After completing dry air filter maintenance, ensure repeated proper function of pollution indicator.

Press the cap on the body of the indicator (3) in the direction of an arrow; you will unblock the driver (1) signalizing pollution mechanically, it will return to initial position. That is how the activity of indicator is renewed.

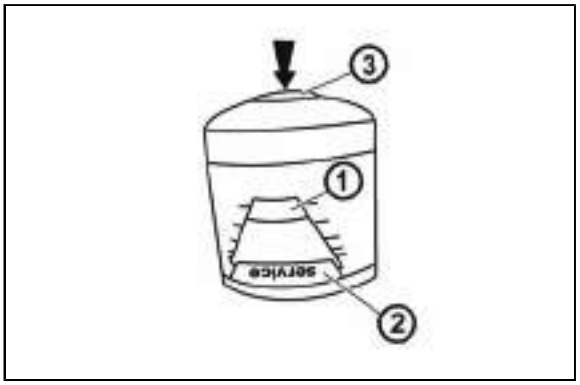

G711

Maintenance instruction of dry air filter
Do air filter maintenance accordingly:
1. heave the front bonnet
2. release the clamps of air filter lid (marked with arrows)
3. remove air filter lid (1)

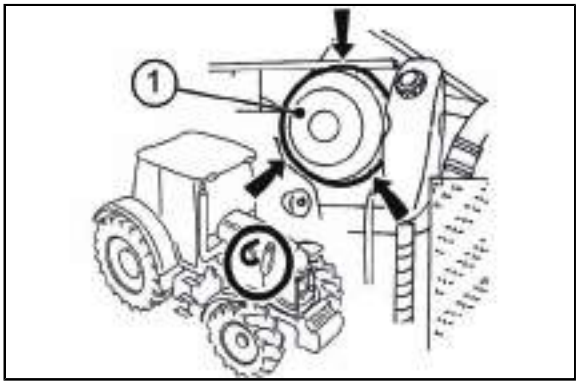

X712

Main air filter element regeneration

- pull to remove the main dry filter element (2)

If main element is not damaged (there must not be dust on the internal side of the element) regenerate by blowing with compressed air from the internal side of the element. Main element can be regenerated this way 3 times maximum. Element must be replaced once a year.

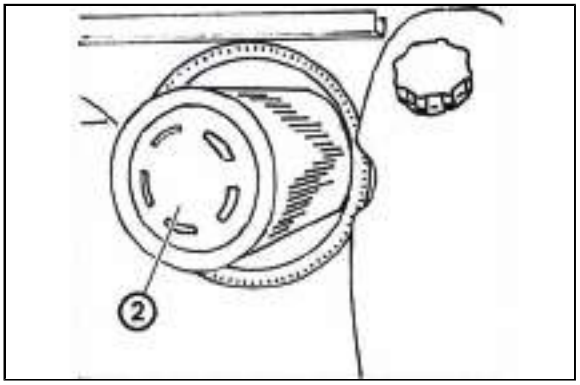

G713

Replacing dry filter locking element

- remove dry filter locking element (3) with a pull

Locking element cannot be regenerated. It must be always replaced in these cases:
- when damaging main element
- after 5 maintenances of air filter
- at least once in two years

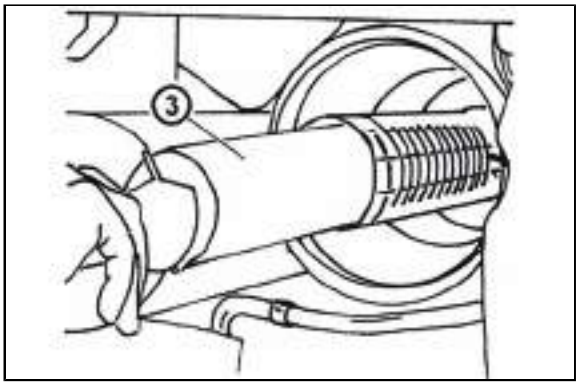

G714

Back assembly of air filter elements

Do back assembly of air filter elements reversely.
Mind the following with back assembly:

- contact surfaces cleanliness
- elements must not be deformed with assembly and must not vibrate after assembly
- after closing the filter with a lid a perfect tightness of the whole filter must be ensured
- after completing the maintenance of dry air filter, secure proper function of pollution indicator

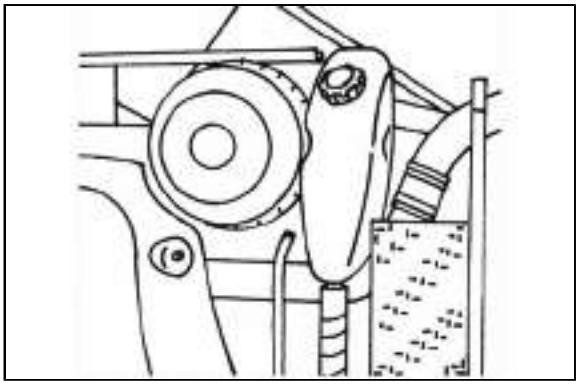

G715

Checking amount of oil in hydrostatic steering tank

Inspect daily before starting the operation with tractor standing horizontally. Lift off the bonnet. Unscrew dipstick, wipe off with a cloth and screw back in. After repeated unscrewing of the gauge, the level must not drop below bottom gauge line. Replenish the oil when necessary after demounting the cap of the tank.

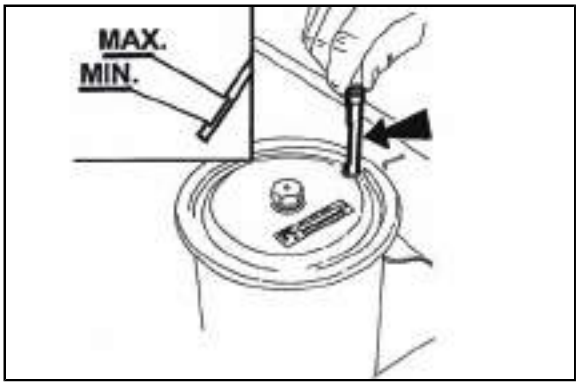

E719

Replacing oil and hydrostatic steering filter element

1. place a suitable vessel under the hydrostatic steering tank
2. unscrew drain screw at the bottom of the tank
3. drain the oil
4. unscrew the nut of tank cap
5. demount the cap of hydrostatic steering tank

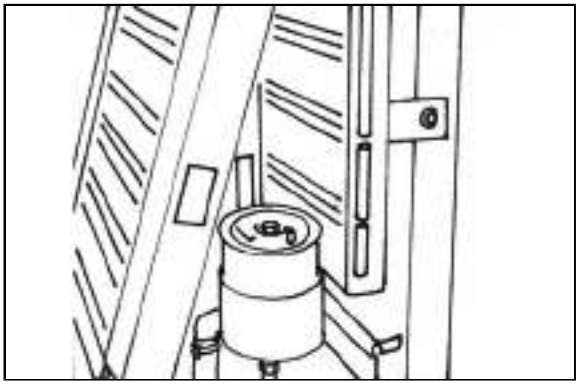

G750

6. remove and replace filter element
7. set the lid of the tank back in
8. lock its position with a nut
9. screw drain screw back in

10. disconnect both hoses from working roller and waste pipeline from the tank (place vessels for used oil under working roller hoses and waste pipeline)
11. start the engine and with idle run (max. 10 seconds) turn the steering wheel 2-3 times to both sides so that you pushed oil from control unit and pipeline
12. secure the tractor against movement and lift front drive axle

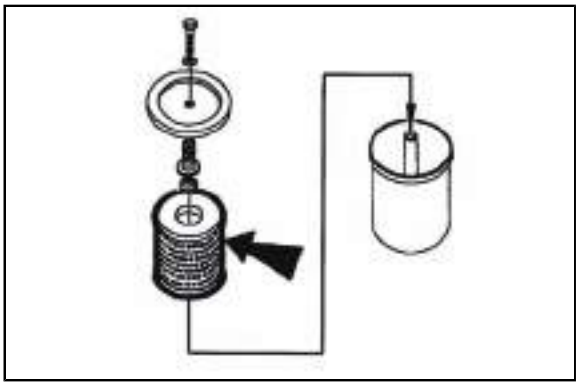

E721

13. place a vessel for oil under the working roller and by turning the wheels (manually) push the oil from working roller
14. do the back assembly of all disconnected joints
15. fill the tank with oil and vent hydrostatic steering circuit

Venting hydraulic circuit of hydrostatic steering

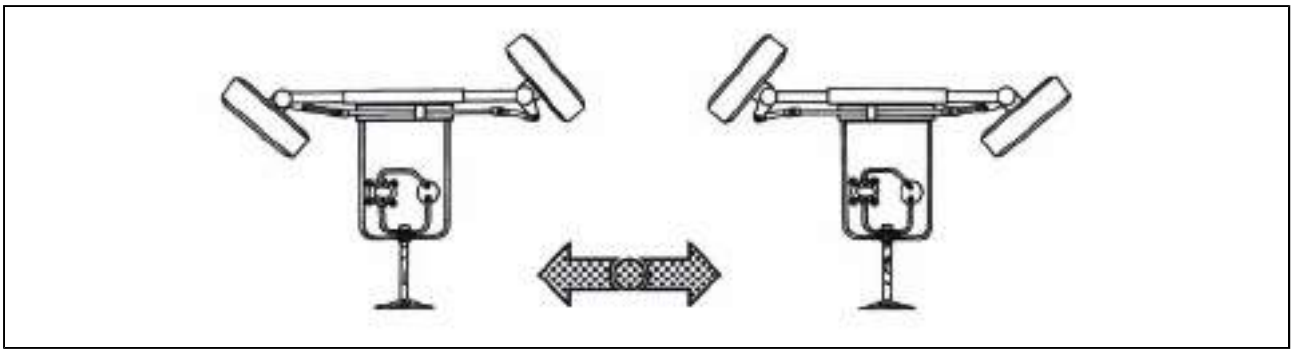

E722

1. secure the tractor against movement and lift the front axle
2. start the engine and allow it to run for approximately 1 minute in idle run
3. turn the steering wheel several times to both sides with idle run
4. with maximum engine revolutions, turn the steering wheel 3 times alternately slowly and quickly to both sides to restricting wheel stop
5. stop the engine
6. after completing the venting check or replenish the oil level to control gauge line. Check the tightness of all joints and hydraulic circuit guide-ways of hydrostatic steering
7. lower the tractor down to front wheels

Monitor oil level in the tank with all hydrostatic steering venting steps to prevent air sucking to the system of steering.

E723

Replacing the hoses of hydrostatic steering

Hoses need to be replaced four years from the date of their manufacture (date is given on their surface) or after working 3,500 hours with tractor, or right after learning the symptoms of their damage (hose, local swelling, penetration of working medium around endpoints and hose surface, wrapping damage by mechanical smear to a metallic body, damage to external buckle braid with low-pressure hoses).

If a pump gets damaged or if the engine is at standstill, steerability is observed, but the force on the steering wheel increases. It is possible to get to the nearest place where repairs can be done with lowered speed. The steering wheel must not be held in the positions of extreme wheel locks for long (maximum time is 20 sec.), otherwise there is excessive oil heating in hydrostatic steering circuit.

Replacing coolant

Proceed in the following way:
1. Open the heating valve and release the pressure cap (C) on equalizing vessel.
2. Drain the coolant from the radiator. Plug (A) is accessible after lifting the bonnet.
3. Drain the coolant from the block of engine. Drain cock (B) is accessible after the disassembly of right side part.
4. After draining the coolant close the drain valve and cap (leave heating cock open).
5. Fill the cooling system with a coolant to the neck in equalizing vessel and close by pressure cap.

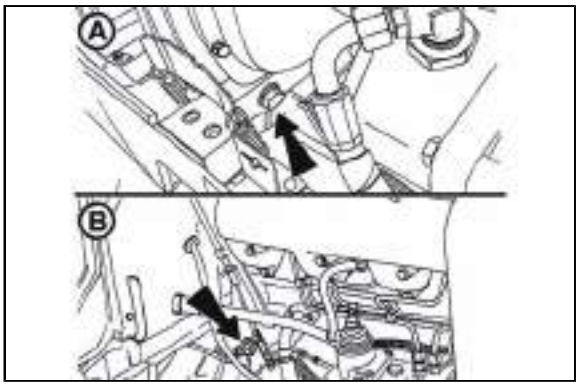

6. Start the engine and allow it to run for approximately 1 min.
7. Fill the level of coolant in equalizing vessel to MAX. gauge.
8. Close the vessel with a pressure cap (C).

Always use the prescribed coolant to fill the cooling system of the engine. Never fill the cooling system with water. Using other than the prescribed coolant may damage the engine.

XF_02_199

Check and replacement of oil in gearbox, axle drive and rear axle portals

Oil level in the gear mechanisms is checked oil gauges, whitch is located in left rear part of the gearbox case.
A - Standard oil filling

Carry out checks when the engine is stopped.

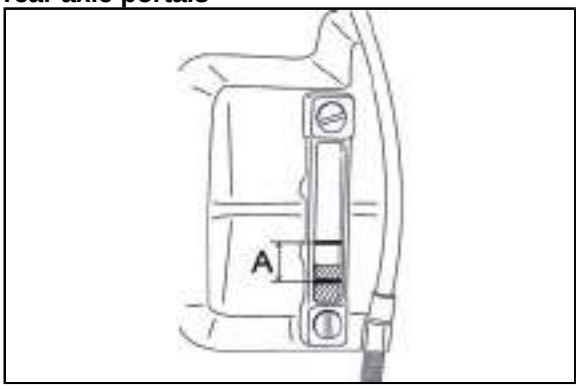

P12N001

Drainage and inspection holes

1. Drain plug of the gear mechanism.
2. Oil drain plug from the outlet for the front driving axle.
3. * Brake chamber inspection screw.
4. Plug for drainage of oil from the axle drive case.
5. Drain plugs of the left and right brake chambers.

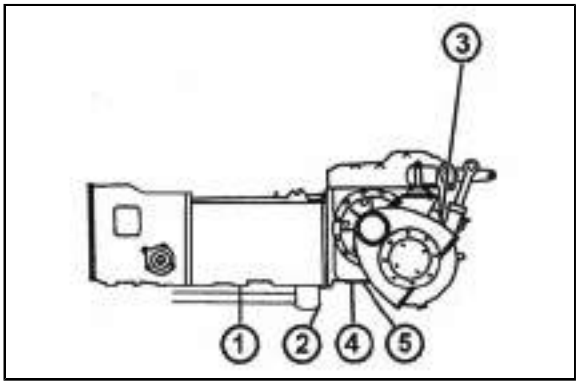

E729

1. * Inspection and oil filling screw of the axle shaft case (applicable for standard adjustment of the portal).
2. Plug for draining of oil from the axle shaft case.
3. * Inspection screw of the brake chamber.

****After screwing out the inspection screw the level of oil shall reach lower edge of the inspection hole.***

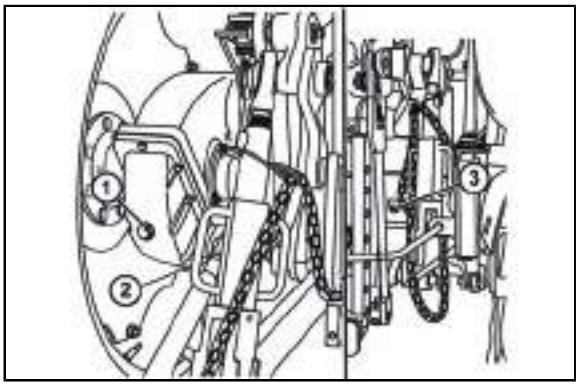

E730

Changing suction filter

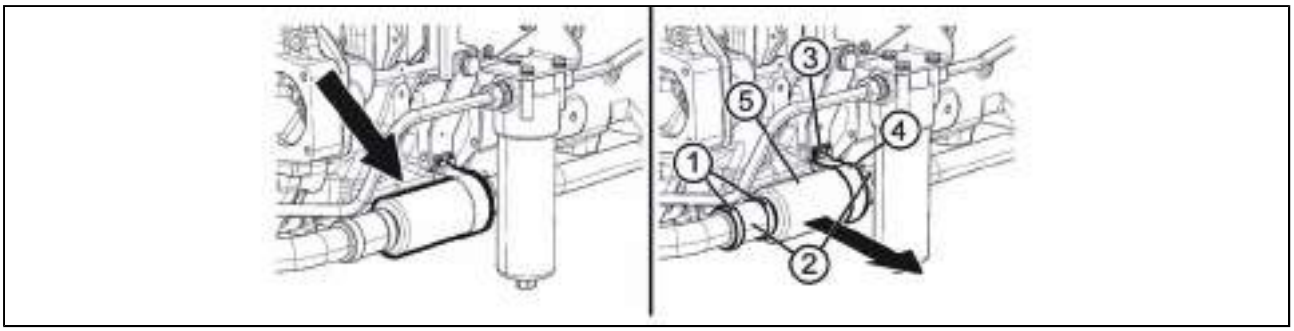

P11004

Suction filter is located on the left side of gearbox. To change the filter, empty the oil from gearbox.
Oil flows out of the hoses while changing the filter. Capture the oil in a clean container.
Loosen cuffs (1) on both sides and pull off the hoses (2). Remove the bolts (3), take off the cuff (4), and remove the filter (5). To place a new filter, proceed contrariwise. Put the oil which has flown out back to gearbox (this holds if it is necessary to change the filter outside the period recommended for changing the filter and oil).

Replacement of the transmission oil cleaner element with hydraulic pump suction filter

The oil cleaner is placed on the left side of the gearbox.

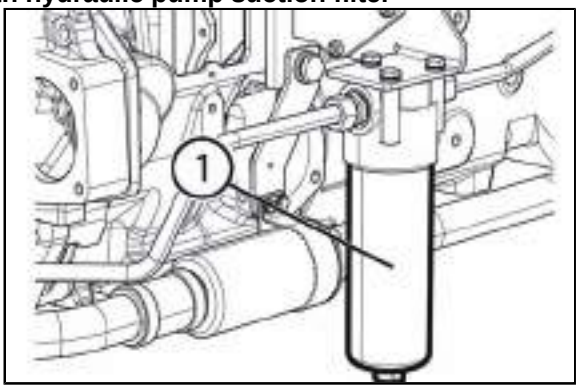

P11N005

Before replacing the oil cleaner element, place a suitable vessel for dripping oil under the tractor.

1. Unscrew the body of the cleaner (1)
2. Replace the filtration element
3. Reassemble the body of the cleaner

Front PTO

The inspection and filling plug of oil (1) is situated on the front side of the front PTO case.

Note: The front PTO with the standard turning direction is equipped with a hollow bolt of the oil cooler hose instead of the inspection and filling plug. Perform the check after removing the hollow bolt.

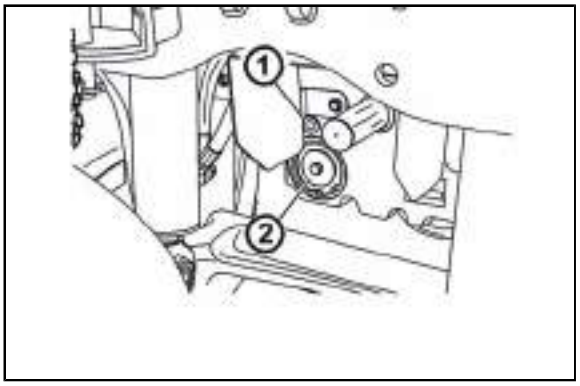

F206

After unscrewing of the inspection plug the oil level must reach the bottom edge of the inspection opening. During the oil replacement the oil cleaning strainer (2) must be cleaned. The cleaning strainer is accessible after the disassembly of the locking ring and removal of the cap.

Filling, controlling and draining hole of oil of front drive axle

1. Lubricating nipple of the kingpin
2. Sliding bearings (2 pieces) of the front driving axle
3. Drain opening of the final drive hous-ing oil
4. Filling and inspection opening of final drive housing oil (after removing of the inspection screw the oil level must reach the bottom edge of the inspection opening)

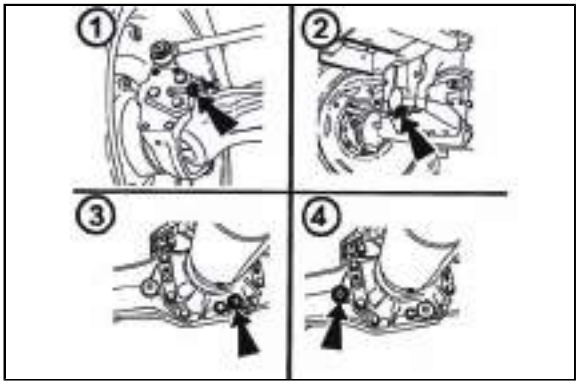

E733

Filling, controlling and draining hole of oil of front wheels reducers

Inspection, filling and draining oil is done by a one hole after turning reducer according to figure.

1. amount of oil inspection - hole in the horizontal axis of a reducer (after unscrewing control screw the level of oil must reach the brim of checking hole)
2. filling oil - hole at the top
3. draining hole - hole at the bottom

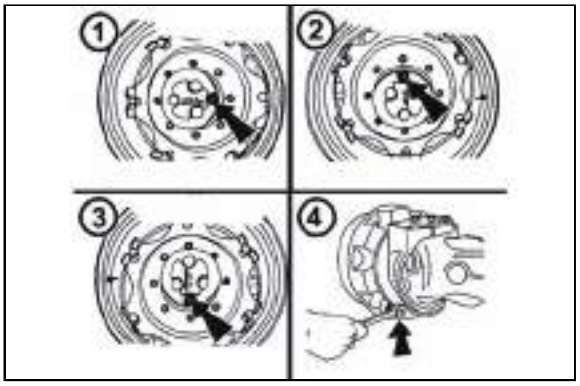

G731

Brake fluid replacement

The tank is located on the left side of the tractor in front of the cabin and accessible after lifting of the bonnet.
Keep level of brake fluid within 3/4 (max. height) and 1/2 (min. level) of the tank volume.

When manipulating with brake fluid observe strict cleanness. Check level every day before you drive out.

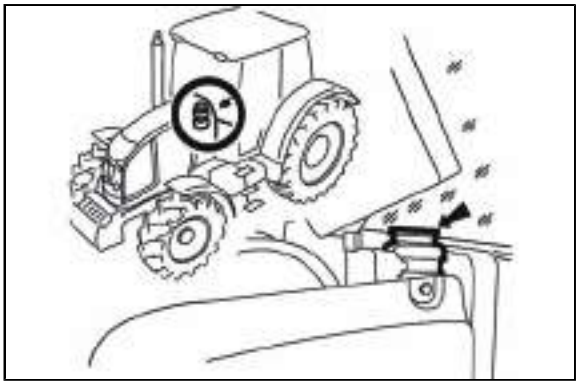

G735a

Cleaning the heating filters

Recover the filters positioned under the covering grills over the windshield outside the cabin with regard to the degree of clogging:
- by shaking
- by blowing with compressed air

Check the filters for clogging daily. Replace heavily clogged filters.

The safety cab of the tractor is not equipped with special filters of air aspirated to the cab.
It does not protect the operator from the effect of aerosols and other harmful substances!
Use a filter with active carbon when working with harmful substances.

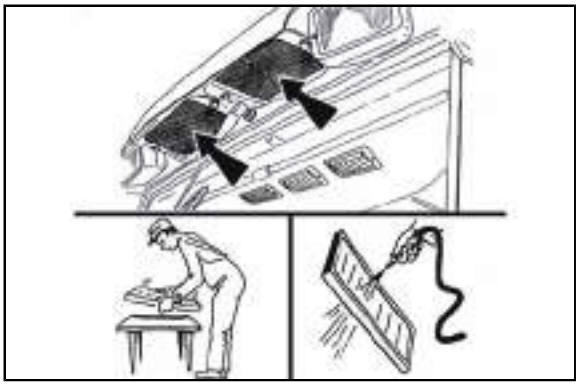

F13BN030

***Air filter with active carbon**

Filters with active carbon are installed instead of the standard dust filter and they are replaced in the same way as the normal filters. The filter must be inserted with the white side towards the grill. The installation instructions are found on the next page.
The filter is only used during spraying of pesticides; then it must be replaced with a paper filter again as flying dust would clog the carbon filter in a very short time.
During its use the recirculation control must be in the position of 'air suctioned from the outside'.
The fan control must be in the 'maximum' position.

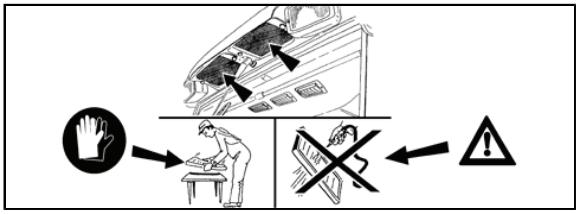

F13BN031

WARNING: The filter does not provide complete protection from toxic substances
- When handling the filter wear protective gloves
- Do not clean or blow the filter with compressed air

DANGER: Replace the active carbon filter every 200 hours or 36 months (the production date is printed on the filter). If you feel the smell of pesticides in the cab, replace the filter immediately and have the cab sealing checked. Used filters must be disposed of in specialized collection centres.

Carbon filter installation instructions

1. Remove the old filter from the air duct orifice in the place of its mounting.
2. Remove the protective package from the new filter.
3. Insert the filter into the air duct orifice in such a way to make the air flow direction correspond to the flow direction through the filter in accordance with the arrow on the filter. The entering air must first pass through the white dust filtration layer.
4. Check proper sealing of the filter.
5. Secure the filter.

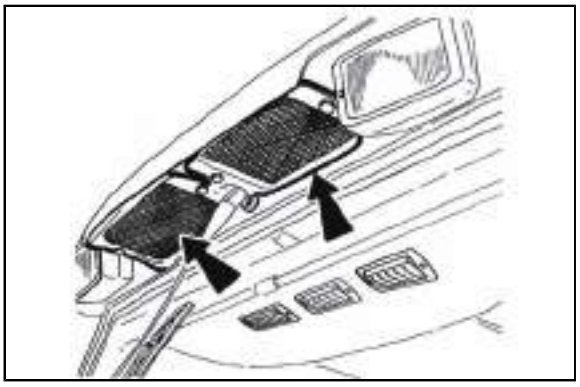

F13BN029

Air-conditioning maintenance

The most important element of maintenance of the air-conditioning system is cleaning the AC condenser (it is installed in front of the engine cooler). If the AC condenser is clogged, it does not only reduce the cooling efficiency of the AC system but also the efficiency of the engine cooling.

Remove the front side plate of the hood, release and slide the cooler towards the side and clean the condenser with pressurized air or pressurized water (against the driving direction of the tractor). Then, slide the cooler back and fix it properly. Be careful about the proper routing of hoses to the oil cooler.

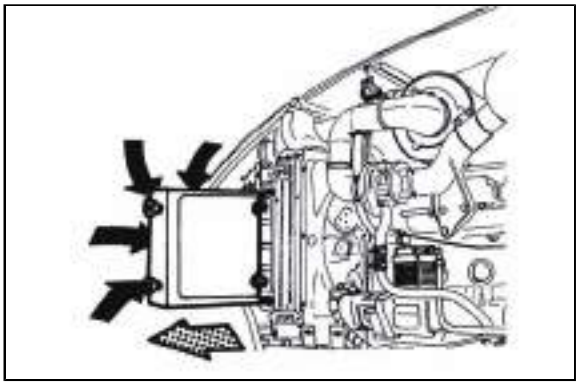

F_02_120

When the air-conditioning functions properly, water condenses in the roof space of the cab and the condensate is drained through hoses in the cab pillars and runs out at the bottom side of the pillar. This is why you must make sure that the condensate drain hoses will not be blocked.

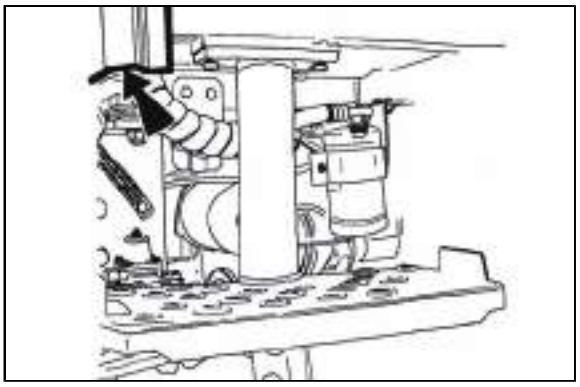

F267

Draining condensate from the air reservoir
Drain condensate by pulling the ring to deflect the bleeding valve.
The valve is installed on the air accumulator bottom.

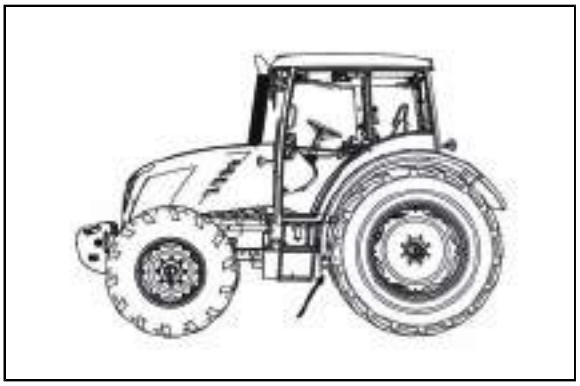

G731

Checking the air systems for leaks
- fill the air reservoir to the maximum pressure (730 ± 20 kPa).
- with the engine stopped the air pressure must not drop by more than 10 kPa in 10 minutes.

Perform the leak check daily before driving with a trailer or semi-trailer. In case of a brake system failure or if the pressure drops below 450 ± 30 kPa, the warning indicator on the dashboard will light up.

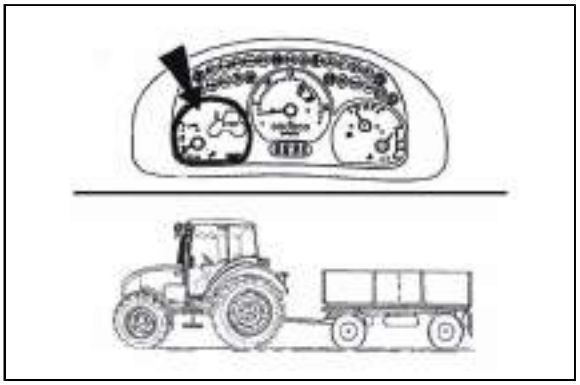

G732

Working pressure of air brakes

In the single- and double-hose version the air pressure at the double-hose coupling (2) (red cap) is 740 ± 20 kPa and at the single-hose coupling (1) max. 600 ± 20 kPa (at the moment the pressure controller relieves the compressor - blows out the air).

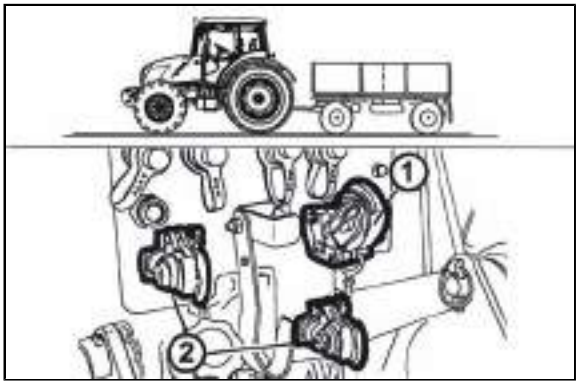

G733

Maintenance and treatment of tyres

Regularly check the outer surface of tyres and verify whether they are free of defects at the sides and over the bead and whether the reinforcement is not damaged.

Do not use tyres that show a defect any longer.

Tyre inflation

The basic recommended inflation values are specified in the table. Regularly check the tyre pressure before driving, when the tyres are cold. To inflate the tyres use the pressure controller (B), which acts as a pressure equalizer, tyre filling device and safety valve. Remove the rubber cap of the pressure controller and screw a tyre inflation hose instead. Screw the hose up to the end of the thread to compress the non-return valve. If there is the maximum pressure in the air reservoir (A), the tyres cannot be inflated. In this case you must first reduce the pressure with the condensate drain valve located in the bottom part of the air reservoir (A). After inflating the tyres you must put the rubber cap back on the pressure controller.

Storing the tractor

If the tractor is to be put out of operation for a shorter period, inflate the tyres to the value required for road transport. In case of a longer period of inactivity of the tractor (storage), support the tractor and reduce the pressure in the tyres to the minimum (the wheels must not touch the ground).

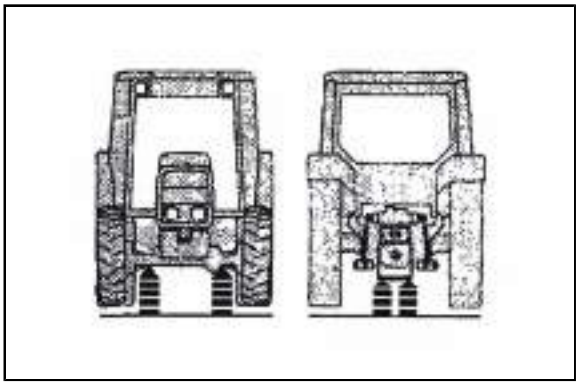

E743

Diesel particle filter maintenance

Leave the maintenance of diesel particle filter to an authorized service.

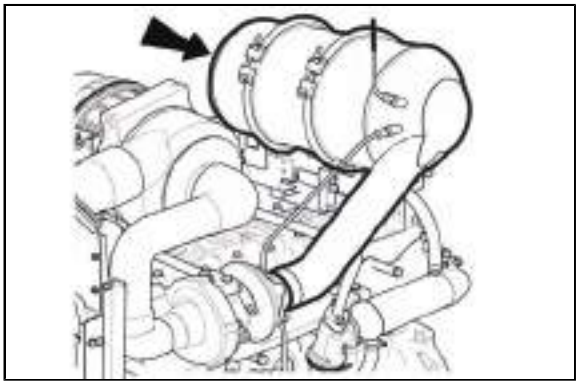

FH12N056

Almost all the following works require certain experience and more exacting service and diagnostic equipment. That's why we recommend to do the works at specialized or authorized workshops.

Cogged belt tension

With proper cogged belt tension the bending of belt must be 5.5 mm with force effect of 25 N on a single belt.
Perform cogged belt tension to prescribed value after releasing tightening screws (1, 2).

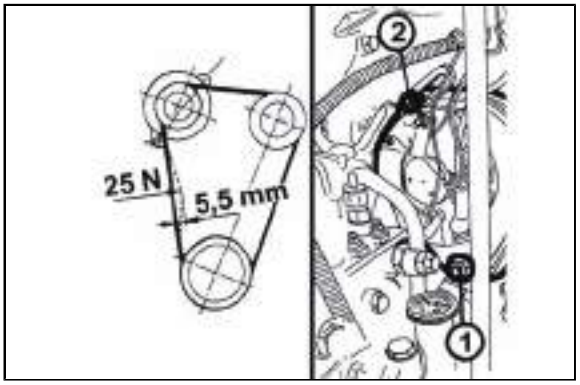

FH12N085

*** Cogged belt tension of air-condition compressor**

With proper cogged belt tension, bending of belt must be 7.5 mm with force effect of 25 N on a belt.
Perform cogged belt tension to prescribed value after releasing tightening screws of air-condition compressor.

Bleeding of tractor brake system

Bleeding of the tractor brake system always do in the following order:
1. pressure air brake system for trailers
2. rear wheel service brakes
3. hydraulic brakes of trailer.

Bleed the pressure air system for trailers and the rear wheel service brakesat unlatched brake pedals, separately for each wheel.Bleed the hydraulic brakes of trailerat latched brake pedals.
During bleeding observe brake fluid level in the equalizing tank to avoid suction of air into the system.
After each two years it is necessary to replace brake fluid in the entire brake circuit.

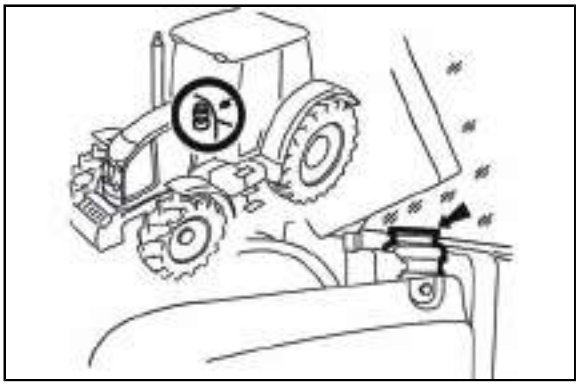

G735a

When bleeding the pressure air system for trailers and the rear wheel brakes, one pedal (1) must be always depressed by $7,5^{+0,5}$ mm -measured to the main brake valve piston rod i.e. $3^{+0,2}$ mm at the adjusting screw (2) and the second pedal is used for bleeding. For keeping the right distance, insert the flat gauge of corresponding thickness, i.e. $3^{+0,2}$ mm, between the pedal (1) and the adjusting screw (2).

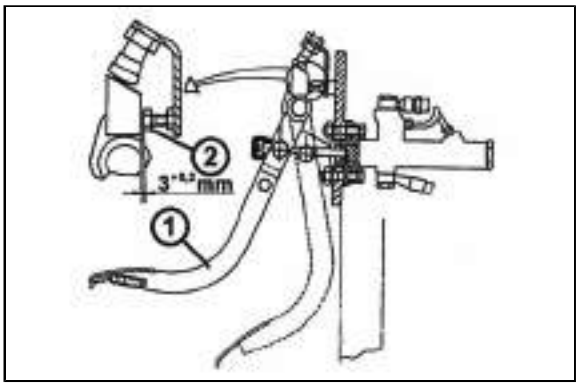

E757

ADJUSTMENT

1. Bleeding of pressure air brake system for trailers

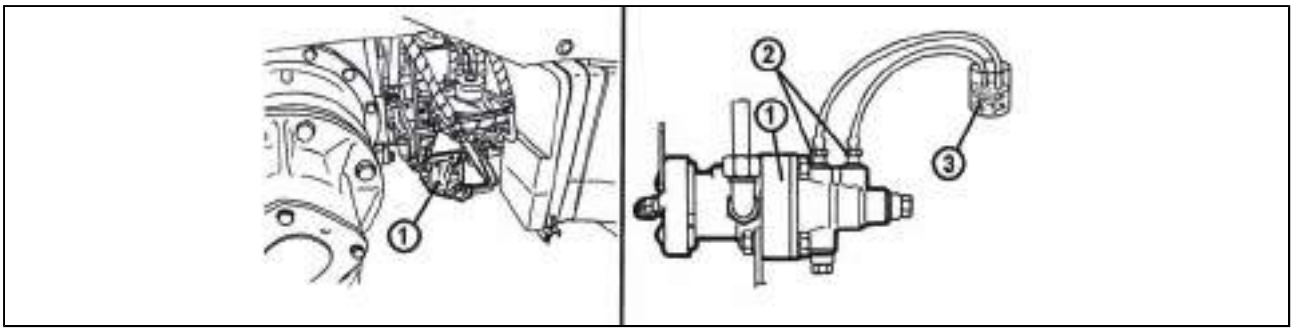

E758

Bleed he system at working air pressure 730 ± 20 kPa in the following way:
1. Add missing volume of brake fluid into the brake fluid tank up to the maximum level.
2. Remove the plugs of the vent screws (2) of trailer control valve (1) located at the right-hand side of the tractor between the fuel tank and the rear half-axle.
3. Slide hoses on the screws and put the other hose ends at the bottom of a transparent tank (3) partially filled with brake fluid. Place the tank minimum 300 mm above the vent screws. The screws must be permanently under pressure to avoid aerating of the brake system through the screw threads.
4. Loosen the bleeding screws maximum by 1/4 turn.
5. Bleeding process is the same as mentioned in - Important (see page 178).
6. Fully depress the pedal that is not blocked by the gauge and tighten the adjusting screw.
7. Release the brake pedal and repeat the process, until air bubbles cease escaping from the hose.

2. Bleeding of rear wheel brakes

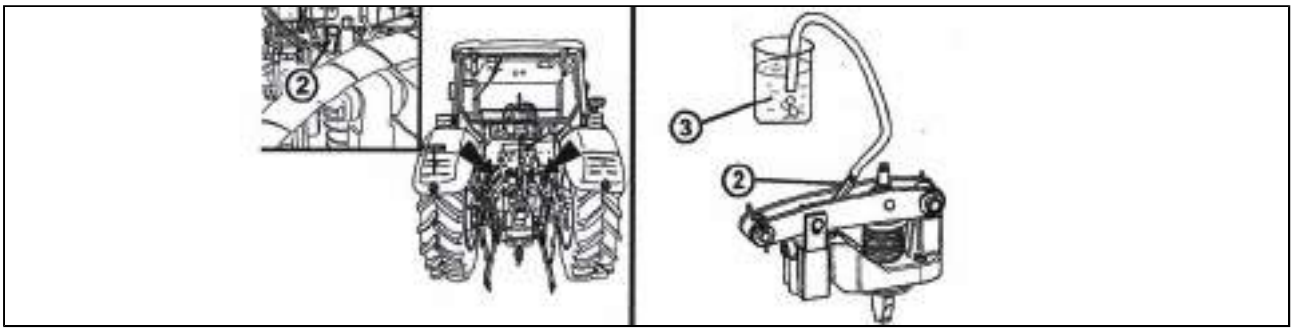

E759

Bleed the system in the following way:
1. Check brake fluid level in the equalising tank. Add missing volume of brake fluid into the brake fluid tank up to the maximum level.
2. After removing of the rubber cap, slide a hose on the vent screw (2) of the brake cylinder and put the hose end at the bottom of a transparent tank (3) partially filled with brake fluid. The vent screw must be permanently under pressure to avoid aerating of the brake system through the screw threads. Place the tank minimum 300 mm above the vent screw at this operation.
3. Loosen the bleeding screws maximum by 1/4 turn.
4. Bleeding process is the same as mentioned in - Important (see page 178).
5. Fully depress the pedal that is not blocked by the gauge and tighten the adjusting screw.
6. Release the brake pedal and repeat the process, until air bubbles cease escaping from the hose.

3. Bleeding of hydraulic brakes of trailer

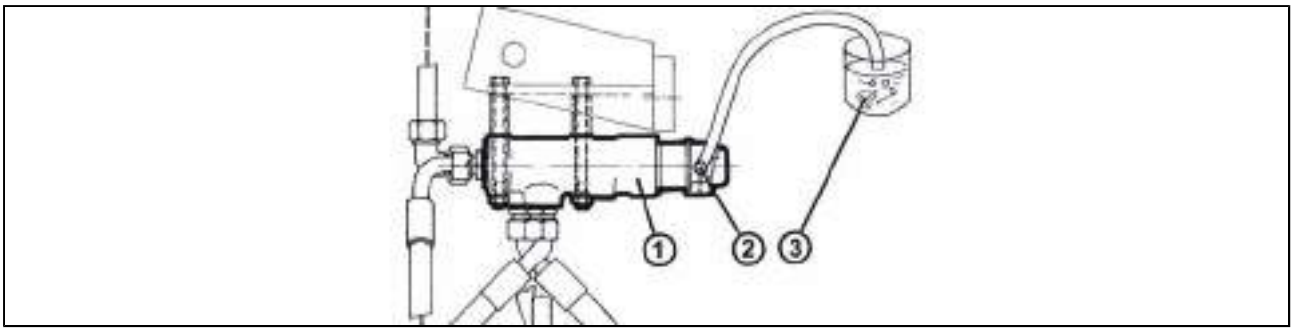

E762

Bleed the system in the following way:
1. Add missing volume of brake fluid into the equalising tank up to maximum level.
2. Remove plug of vent screw (2) of hydraulic trailer control valve (1) located at the left-hand front support of the cab silent-block.
3. Slide a hose on the screw and put the hose other end at the bottom of a transparent tank (3) partially filled with brake fluid. Place the tank minimally 300 mm above the vent screw. The vent screw must be permanently under pressure to avoid aerating of brake system through the screw threads.
4. Loosen the bleeding screws maximum by 1/4 turn.
5. Fully depress the latched brake pedals to the stop and tighten the adjusting screws.
6. Release the brake pedals and repeat the process, until air bubbles cease escaping from the hose.

Check and adjustment of service and parking brakes
Adjustment must be done in the following steps:
1. service brake adjustment
2. parking brake adjustment
Another way is not possible. Also only separate adjustment of either service or parking brake is not possible. Adjusting operations depend on one another.

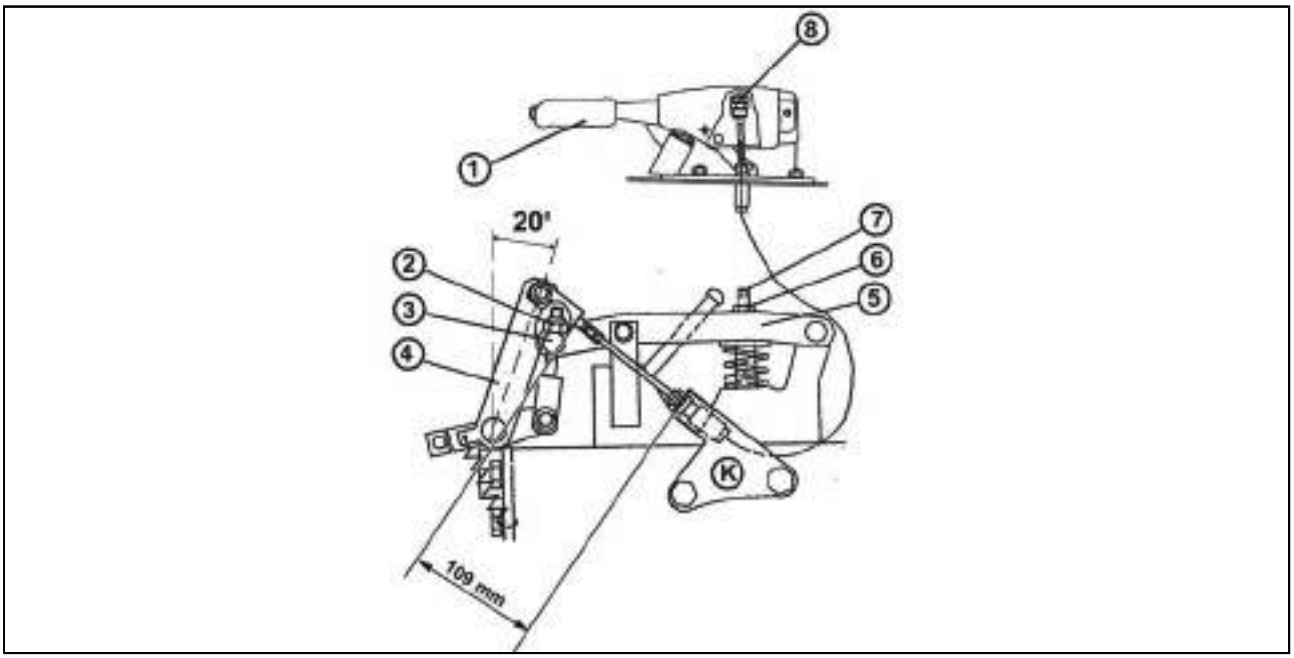

E763

ADJUSTMENT

Service brake adjustment

Secure the tractor against movement!

1. Lift the tractor rear wheels.
2. Loosen the nuts (2), nuts (6) and nuts (8).
3. Loosen the screw (7).
4. Let your helper turn one wheel and simultaneously tighten the screw (5) until the wheel starts to be braked.
5. Loosen the screw (7) by 5/6 turn, check, if the wheel can turn freely and secure the screw (7) with the nut (6).
6. Adjusting process is the same at the right-hand and left-hand sides.

If asymmetry of brake effect appears between the left and right brakes, it is necessary to loosen the adjusting screw (7) of the brake with bigger brake effect, until the brake effects of the right and left wheels are equal. But the screw can be loosened maximum by 1/2 turn. If asymmetry of brake effect is not eliminated even after such adjusting, the tractor brakes must be adjusted in an authorized service.

Parking brake adjustment

1. Set the lever (4), so that the distance between the bracket (K) and the fork face at the level (4) might be 109 mm (so that the lever (4) might form angle 20° with vertical plane)
2. Screw the nut (2) to the seating surface of the pin (3) without play and without pre-stressing - it must not come to depressing of the arms (5).
3. Adjusting process is the same at the right-hand and left-hand tractor sides.
4. By means of the nuts (8) adjust the Bowden cable of the parking brake lever so that at preservation of angle 20° at the lever (4), the parking brake lever could be without play.
5. Rise and lower the parking brake lever (1) several times. You will eliminate possible mutual plays among the parts by this way.
6. Check adjustment of the parking brake system, in case of necessity re-adjust, and check tightening of all locking nuts (6), (8)

If asymmetry of brake effect of the parking brake appears between the left and right brakes, it is necessary to loosen the upper adjusting nut (6) of the brake with bigger brake effect until the brake effects of the right and left wheels are equal. But the nut (2) can be loosened maximally by 1,5 turn. If asymmetry of brake effect is not eliminated after such adjusting, the tractor brakes must be adjusted in an authorized service.

Note: There are adjusting openings in the tractor cab floor for making easy the brake.

ADJUSTMENT

Adjustment of free travel of brake pedals

Correct play between the piston rod of brake pedal and the piston of main brake valve is 0.5 - 1.0 mm (3 - 6 mm when measured at the edge of the brake pedals at unlatched pedals). Adjust the play at unlatched pedals and after releasing of the adjusting nut (1), in which the piston rod is screwed.

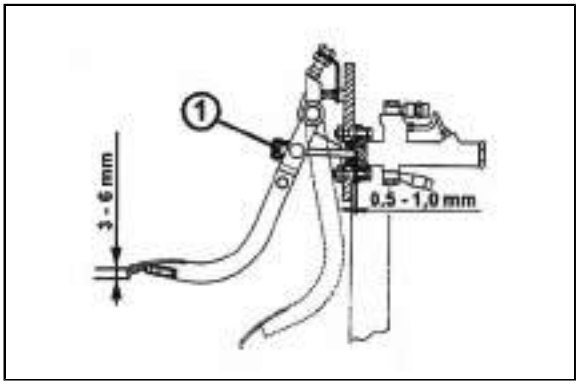

C754

Adjustment of free travel of clutch pedal

Correct play between pedal piston rod and main cylinder piston is not adjusted -play is adjusted by the producer. Mutual position between the piston rod and piston rod eye (1) is adjusted so that the piston rod might be maximally pulled out from the cylinder and simultaneously the play between the pedal and the upper stop screw (2) might be 0,1 - 0,2 mm. Subsequently the piston rod is fixed with the nut (3) to piston rod eye. Check eventual deformation of dust cap after adjustment, in case of deformation correct it by hand.

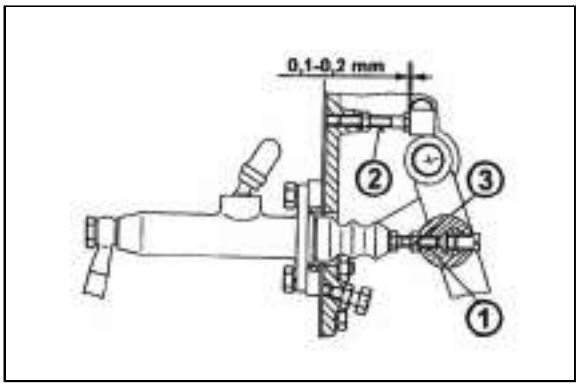

C765

Bleeding of hydraulic clutch circuit

Bleed the clutch hydraulic circuit in the same way as rear brake system bleeding. The vent screw of clutch hydraulic circuit is located at the clutch control cylinder (1).

Add only fresh brake fluid into the brake fluid tank, which is common for both brake and clutch circuits.
Brake fluid must be replaced in the entire brake circuit including the clutch hydraulic circuit after each two years of operation.

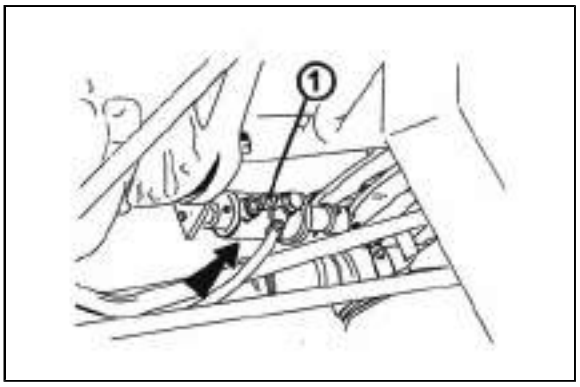

C767

ADJUSTMENT

Adjustment of mechanical control of PTO clutch

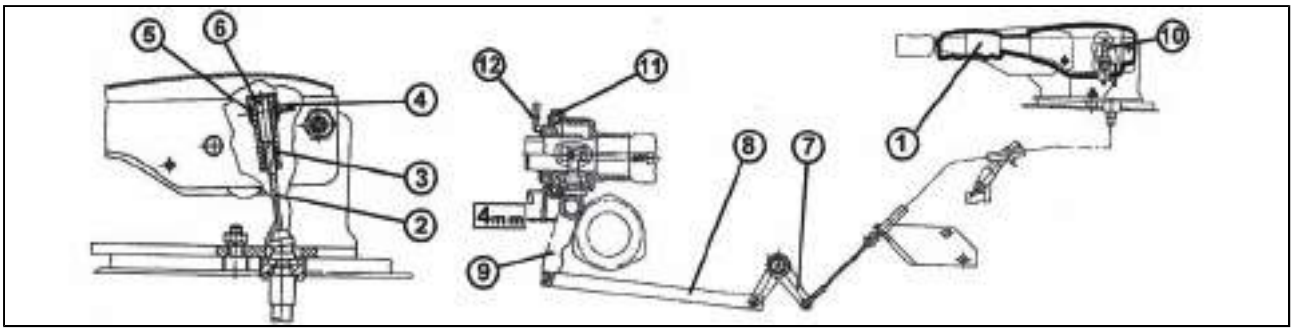

C769

It works through the release bearing on the PTO clutch levers.
1. Lever
2. Bowden cable
3. Adjusting nut
4. Adjusting screw
5. Pin
6. Bowden cable bolt
7. Two-arm lever
8. Draw rod
9. Shaft with lever
10. Electric switch
11. Bearing
12. Release levers of travel clutch

Adjustment procedure
1. Remove the plastic cover of the lever of hand control of the PTO clutch.
2. Loosen the adjusting screw (4). This way the adjusting nut (3) is released.
3. Adjust the play between the bearing (11) and the clutch levers (12). Perform the adjustment with the adjusting nut (3) so that the play between the bearing (11) and the clutch levers (12) might be 4 mm; at the same time it must not decrease under 2,5 mm. During adjusting hold the Bowden cable bolt (6) in the adjusting nut (3) so that it could not come to its turning together with the adjusting nut (3) and so to plying apart of the Bowden cable (2).
4. After adjusting secure the adjusting nut (3) with the adjusting screw (4). Check, that seating surface of the adjusting nut (3) is seated at upper surface of the pin (5).
5. By shifting of the lever (1) to the disengaged position, the indicator lamp at the dashboard must be 'on'.
6. When the release levers of the travel clutch are adjusted properly, the control force at the lever (1) is max. 200 N. If the force increases non-proportionally (ca 2 times) it is necessary to adjust the release levers of the travel clutch.

ADJUSTMENT

Adjustment of pneumatic control of PTO clutch with mechanical connection

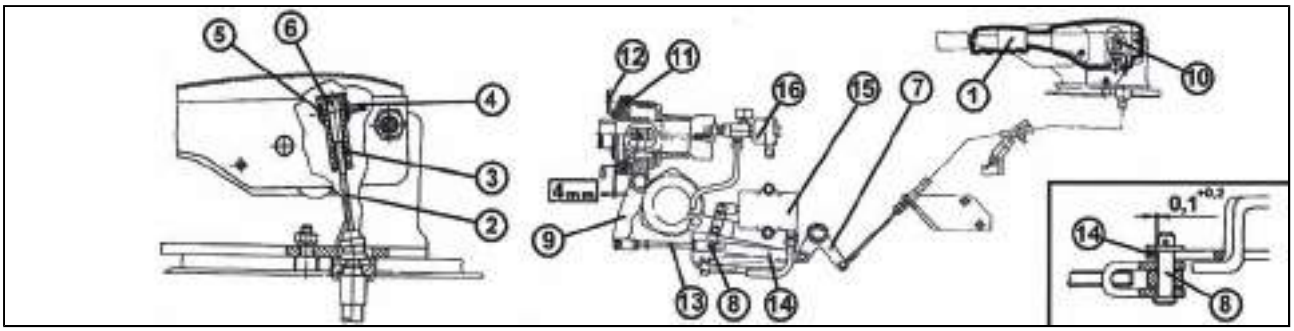

C771

1. Lever
2. Bowden cable
3. Adjusting nut
4. Adjusting screw
5. Pin
6. Bowden cable bolt
7. Two-arm lever
8. Pin
9. Shaft with lever
10. Electric switch
11. Bearing
12. Release levers of travel clutch
13. Adjusting draw rod
14. Draw rod
15. Air cylinder
16. Electromagnetic valve

Adjustment procedure:
1. Remove the plastic cover of the lever of hand control of the PTO clutch.
2. Adjust the play between the bearing (11) and the clutch levers (12). Perform the adjustment with the draw rod (13) so that the play between the bearing (11) and the clutch levers (12) might be 4 mm; at the same time it must not decrease under 2,5 mm.
3. The air cylinder piston (15) must be in the basic stop position during adjustment.
4. Loosen the adjusting screw (4). So the adjusting nut (3) is released. With the adjusting nut (3) adjust the play between the pin (8) and opening of the draw rod (14) to the value $0,1^{+0,2}$ mm. During adjusting hold the Bowden cable bolt (6) in the adjusting nut (3) so that it could not come to its turning together with the adjusting nut (3) and so to plying apart of the Bowden cable (2).
5. After adjusting secure the adjusting nut (3) with the adjusting screw (4). Check, that seating surface of the adjusting nut (3) is seated at upper surface of the pin (5).
6. Check the play between the bearing (11) and the clutch levers (12); eventually readjust with the draw rod (13).
7. After adjusting shift the lever (1), without switching-on of electric current supply to the electromagnetic valve (16), by the force that is needed for releasing of the PTO clutch. After releasing of the lever (1) check adjustment according to points 4., 5. and 6
8. At shifting of the lever (1) to the disengaged position, the indicator lamp at the dashboard must be 'on'.
9. When the release levers of the travel clutch (12) are adjusted properly, the control force at the lever (1) is max 120 N, at the electromagnetic valve switch (16) in 'on' position and 200 N at the valve in 'of' position. If the force increases non-proportionally (up to 2 times) it is necessary to adjust the release levers of the travel clutch.

ADJUSTMENT

Engine travel clutch adjustment

The travel clutch is designed in such manner that no adjustment is required during the entire service life of clutch plate lining. Full wear of the plate becomes evident by clutch slipping. All the three travel clutch levers must be in one plane and must be in touch with the clutch release sleeve. When replacing the travel clutch plate, adjust the clutch to the following value still at disassembled tractor. Set the travel clutch levers 25 mm from the recess in the clutch cover by means of the nuts. The difference in setting of the levers can be maximum 0,15 mm. Depress the clutch pedal approx. 5 times up to the stop after assembly of the engine with the transmission.

Play adjustment of front wheel roller bearings at tractor without front driving axle

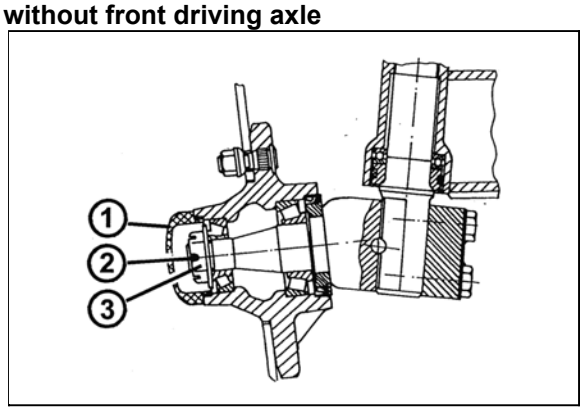

C772

Secure the tractor against movement!

- Lift up and support the front axle.
- Screw off the bearing cover (1).
- Remove the cotter pin (2) from the slotted nut (3).
- Tighten the slotted nut (3) by torque 15 Nm.
- Loosen the nut by 180° and release the bearing by knocking with wooden mallet at the wheel hub.
- Retighten the slotted nut (3) with torque wrench by torque 3-5 Nm. It must be possible to turn the wheel freely without any evident play but without any evident resistance. (Hub sealing resistance must be taken into consideration)
- Lock the slotted nut with a new cotter pin.
- Screw in the bearing cover.

Adjustment of hitch for single-axle trailers

1. Lift the hydraulic arms to their upper (transport) position with selected position regulation (**P**)
2. Screw the nuts on the adjustable pull rods to the guide tube without any play.
3. Further tighten the nuts by 3.5 turns.
4. Check free tilting of the supporting hooks.
5. By repeated lowering and lifting of the hydraulic arms to their transport position verify free run of the engine at idle speed; the safety valve of the hydraulic pump shall not be activated.
6. Then lower slightly the arms.

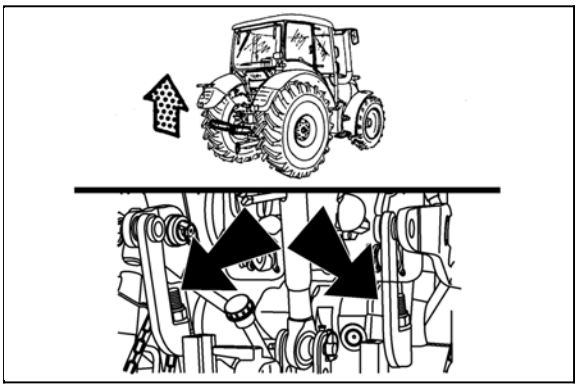

E766

Adjustment of bowden cable

The hitch is in transport position. The Bowden cable shall be stretched so that there is no play on the control lever in the cabin. In case that it is stretched insufficiently, adjust it using the set screw (1). After completion of the adjustment lock the set screw by the lock nut (2).

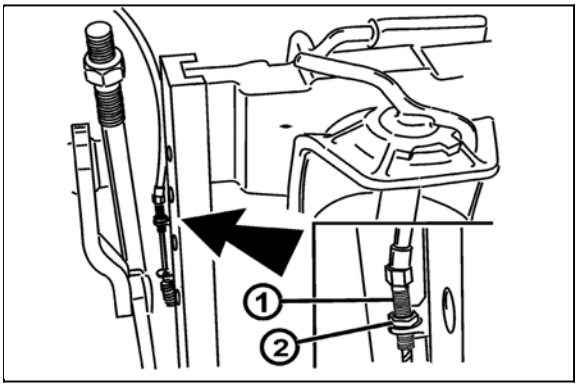

G767

Calibration of travel speed of digital dashboard

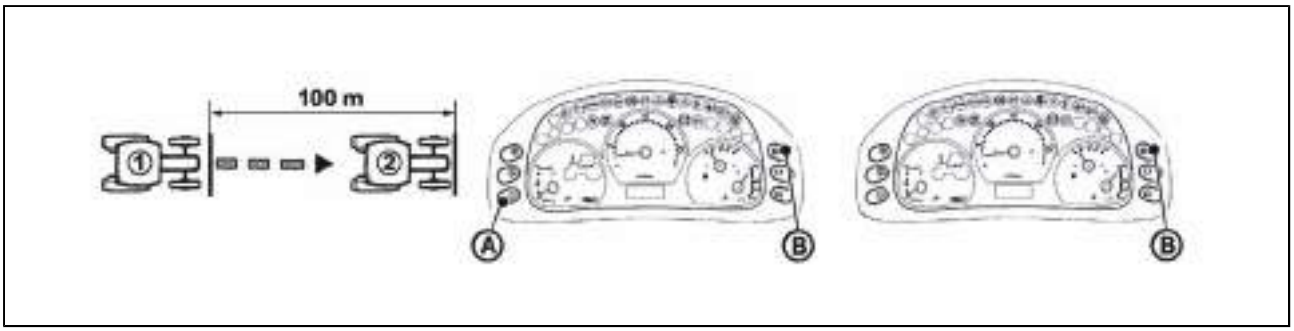

E769a

Dashboard is calibrated after the assembly in production plant. Do the repeated calibration:
- After significant wear of tyres
- When assembling new tyres
- When replacing the dashboard

Calibration procedure
- On an appropriate area, mark a track of 100 m length
- Inflate the tyres of the tractor to the prescribed pressure, see tables of this Operator´s Manual
- Start the engine
- Locate the tractor at the beginning of the hundred-metre track
- Press the **(A)** and **(B)** buttons simultaneously. Keep the buttons pressed for 7 sec. There will be an acoustic signal and in **'c-n-t'** inscription starts flashing on the display.
- Release both buttons **(A)** and (**B), 'c-n-t'** inscription stops flashing
- Start the tractor in a balanced speed of 10 $km.h^{-1}$
- After travelling the whole distance of 100 m, stop the tractor on a marked end of the track (see fig. E769)
- Press **(B)** button.
- If calibration has been completed without errors, there will be acoustic signal and **'Pulse'** inscription will appear on the display
- After 2 sec, calibration value will appear on the display.
- After another 2 sec, the calibration is automatically completed, dashboard is calibrated and ready for operation.

MAIN TECHNICAL PARAMETERS

Main dimensions of tractor (mm)

Tractor model	tractors without front drive	tractors with front drive	Note
Contour length with hitches with lowered front three point hitch	4803	4717	
Contour length with hitches without front three point hitch			
- without ballast weights in front of tractor mask	3873	3787,5	
- with ballast weights in front of tractor mask	4152	4066,5	
Width over rear fenders	1910	1910	
Height up to muffler top	2622 - 2684	2671 - 2692	According to applied tires
Height up to cab top	2580 - 2633	2600 - 2667	According to applied tires
Ground clearanceunder front axle housing	470 - 540	385 - 429	According to applied tires
Height of trailer hitch mouth in highest position (mouth centre)	862 - 989	826 -972	According to applied tires
Height of swinging draw bar (to inner bottom surface of clevis)	247 - 376	209- 358	According to applied tires
Height of rear PTO shaft	660 - 770	641 - 764	According to applied tires
Height of front PTO shaft	438 - 544	512 - 600	According to applied tires
Wheel base	2321,5	2236	

MAIN TECHNICAL PARAMETERS

Technical specifications of engines of tractors Proxima (Stage III B 16V)

Type of tractor		Proxima CL 80	Proxima CL 90
Type of engine		1106	1206
Engine		compression ignition, 4-stroke cycle, direct fuel injection, turbo-charged	
Engine design		in-line, vertical, water-cooled	
Number of cylinders		4	
Stroke volume	cm^3	4156	
Bore x stroke	mm	105x120	
Nominal speed	rpm	2,200	
Order of injection		1-3-4-2	
Compression ratio		17	
Max. override speed	rpm	2,460	
Idle speed	rpm	800 ± 25	
Net power at nominal speed, measured acc. to EC24	kW	56	64
Specific fuel consumption at the given power	g/kWh	216	258
Max. torque (Mt)	Nm	329	355
Excess of Mt	%	35	38
Lubrication of engine		Pressure system with gear pump	
Max. consumption of oil after 100 Mh of engine running-in	g/kWh	0.5	
Pressure of oil at engine nominal speed and temperature of oil 80 °C	MPa	0.2 - 0.5	
Minimum pressure of oil at 750 rpm and oil temp. 80 °C	MPa	0.08	
Max. temp. of cooling fluid	°C	106	
Valve gear		OHV	
Angle of injections advance		11	
Valve play of cold engine: - inlet valve - exhaust valve - valve bridge clearance	 mm mm mm	 0.25 ± 0.05 0.25 ± 0.05 0.05	

MAIN TECHNICAL PARAMETERS

Max. allowed load of front axle tractors without front drive (kg)

Travel speed ($km.h^{-1}$)	Wheel base (mm)		
	1,495 - 1,500	**1,570 - 1,600**	**1,870 - 1,900**
30	1,500	1,500	1,500

The load is valid with regard to axle. The allowed load with regard to tires is given in chart 'Loading capacity of front tires'.

Max. permitted loading of the front axle tractors with front drive (kg)

Travel speed ($km.h^{-1}$)	Wheel track (mm)				
	1,525	**1,610 - 1,620**	**1,680 - 1,690**	**1,760 - 1,770**	**1,825 - 1,835**
40	2,600	2,600	2,600	2,600	2,600

The load is valid with regard to axle. The allowed load with regard to tires is given in chart 'Loading capacity of front tires'.

Max. allowed load of rear axle (kg)

Travel speed ($km.h^{-1}$)	Wheel base (mm)						
	1,350	**1,425**	**1,500**	**1,575**	**1,650**	**1,725**	**1,800**
40	5,000	5,000	5,000	5,000	5,000	4,500	4,300

The load is valid with regard to axle. The allowed load with regard to tires is given in chart 'Loading capacity of rear tires'.

Max. allowed weight of set 'tractor + hitched implement' (kg)

Travel speed ($km.h^{-1}$)	Maximum weight of set	
	tractors without front drive	tractors with front drive
40	-	5400

Condition of steeringability

Travel speed ($km.h^{-1}$)	Load of tractor front axle of overall weight tractor + hitched implement (%)
max. 40	min. 25

MAIN TECHNICAL PARAMETERS

Loading capacity of front tires

Tire size	Travel speed					
	40 km.h^{-1}			**30 km.h^{-1}**		
	Loading capacity of tires (kg)			Loading capacity of tires (kg)		
	Tire 1 pc	Axle	Inflating (kPa)	Tire 1 pc	Axle	Inflating (kPa)
9,5-24	890	1780	280	1110	2220	280
11,2-24	980	1960	240	1225	2450	240
11,2R24	1000	2000	130	1250	2500	160
320/70R24	1000	2000	120	1300	2600	160
12,4-24	1000	2000	190	1300	2600	200
12,4R24	1000	2000	100	1300	2600	140
12,4-28 $_{10\ PR}$	1000	2000	170	1300	2600	180
13,6R24	1000	2000	90	1300	2600	130
380/70R24	1000	2000	80	1300	2600	110
6,00-16	-	-	-	570	1140	340
6,50-16	-	-	-	625	1250	320
7,50-16	-	-	-	750	1500	280
9,00-16	-	-	-	750	1500	180
10,00-16	-	-	-	750	1500	225
7,50-20	-	-	-	750	1500	240

MAIN TECHNICAL PARAMETERS

Tire size	Travel speed					
	20 km.h^{-1}			**8 km.h^{-1}**		
	Loading capacity of tires (kg)			Loading capacity of tires (kg)		
	Tire 1 pc	Axle	Inflating (kPa)	Tire 1 pc	Axle	Inflating (kPa)
9,5-24	1330	2660	280	1550	3100	280
11,2-24	1450	2900	240	1700	3400	240
11,2R24	1450	2900	160	1700	3400	150
320/70R24	1450	2900	150	1700	3400	140
12,4-24	1450	2900	180	1700	3400	180
12,4R24	1450	2900	130	1700	3400	120
12,4-28 $_{10\ PR}$	1450	2900	160	1700	3400	160
13,6R24	1450	2900	120	1700	3400	110
380/70R24	1450	2900	100	1700	3400	90
6,00-16	685	1370	340	800	1600	340
6,50-16	750	1500	320	875	1750	320
7,50-16	900	1800	280	1040	2080	280
9,00-16	1065	2163	220	1240	2480	220
10,00-16	1150	2300	225	1500	3000	225
7,50-20	1050	2100	280	1225	2450	280

Note: Loading capacity values are valid for front wheel tread 1495 - 1525 mm and are in accordance with axle loading capacity.
At operation on hard surface it is suitable with regard to slipping and galling of tire to raise pressure by 30 kPa.

MAIN TECHNICAL PARAMETERS

Loading capacity of rear tires

Tire size	Travel speed					
	40 km.h^{-1}			**30 km.h^{-1}**		
	Loading capacity of tires (kg)			Loading capacity of tires (kg)		
	Tire 1 pc	Axle	Inflating (kPa)	Tire 1pc	Axle	Inflating (kPa)
12,4-28 $_{10\ PR}$	1430	2860	280	1790	3580	280
14,9-28	1500	3000	180	1880	3760	180
14,9R28	1700	3400	150	1930	3860	160
16,9-28	1700	3400	170	2000	4000	150
16,9R28	1700	3400	110	2000	4000	130
16,9-30	1700	3400	160	2000	4000	150
16,9R30	1700	3400	100	2000	4000	120
480/70R30	1700	3400	90	2000	4000	100
18,4-30	1700	3400	120	2000	4000	100
18,4R30	1700	3400	80	2000	4000	100
16,9-34	1700	3400	150	2000	4000	130
16,9R34	1700	3400	100	2000	4000	110
480/70R34	1700	3400	80	2000	4000	90
18,4-34 $_{8\ PR}$	1700	3400	110	2000	4000	110
18,4R34	1700	3400	80	2000	4000	90
12,4-36	1150	2300	170	1440	2880	170
520/70R34	2680	5000	120	2640	5000	100
600/65R34	2520	5000	80	2700	5000	80
13,6-36	1300	2600	160	1615	3230	160

MAIN TECHNICAL PARAMETERS

Tire size	Travel speed					
	20 km.h^{-1}			**8 km.h^{-1}**		
	Loading capacity of tires (kg)			Loading capacity of tires (kg)		
	Tire 1 pc	Axle	Inflating (kPa)	Tire 1 pc	Axle	Inflating (kPa)
12,4-28 $_{10\ PR}$	2000	4000	260	2000	4000	210
14,9-28	2000	4000	150	2000	4000	120
14,9R28	2000	4000	140	2000	4000	100
16,9-28	2000	4000	110	2000	4000	90
16,9R28	2000	4000	100	2000	4000	80
16,9-30	2000	4000	100	2000	4000	80
16,9R30	2000	4000	100	2000	4000	80
480/70R30	2000	4000	80	2000	4000	80
18,4-30	2000	4000	80	2000	4000	80
18,4R30	2000	4000	80	2000	4000	80
16,9-34	2000	4000	100	2000	4000	80
16,9R34	2000	4000	90	2000	4000	80
480/70R34	2000	4000	80	2000	4000	80
18,4-34 $_{8\ PR}$	2000	4000	110	2000	4000	110
18,4R34	2000	4000	80	2000	4000	80
12,4-36	1730	3460	170	2000	4000	170
520/70R34	2640	5000	100	2930	5500	80
600/65R34	2700	5000	80	2960	5500	60
13,6-36	1940	3880	160	2000	4000	140

Note: Loading capacity values are valid for rear wheel tread 1725 mm and are in accordance with axle loading capacity.
At operation on hard surface it is suitable with regard to slipping and galling of tire to raise pressure by 30 kPa.

MAIN TECHNICAL PARAMETERS

Change of load capacity of front tires %

Travel speed ($km.h^{-1}$)	**diagonal**	**radial**
8	+ 40	+ 50
20	+ 20	+ 23
30	0	+ 7
40	- 20	0

Change of load capacity of rear tires %

Travel speed ($km.h^{-1}$)	**diagonal**	**radial**
8	+ 40	+ 50
20	+ 20	+ 23
30	0	+ 7
40	- 20	0

Permitted combinations of wheels for tractors

Front wheels		**Rear wheels**	
Tyre size	equivalent	Tyre size	equivalent
11,2-24	11,2R24	13,6-36	
	320/70R24	16,9-30	16,9R30 480/70R30
12,4-24	12,4R24 360/70R24	18,4 -30	18,4 R30 520/70R30
		16,9-34	16,9R34 480/70R34
		13,6-36	
13,6-24	13,6R24 380/70R24	16,9-34	16,9R34 480/70R34
		18,4-34	18,4R34 520/70R34 600/65R34

MAIN TECHNICAL PARAMETERS

Lifting force of the three-point hitch

Type of engine	**Proxima CL 80**	**Proxima CL 90**
Lift capacity at the end of the lower drawbars of the rear thee-point hitch during the entire lift while using up the maximum pressure with 2 outer cylinders - cylinder 63mm in diameter (kN) - *cylinder 75mm in diameter (kN)	 27 38	
Lift capacity at the end of the lower drawbars of the front three-point hitch during the entire lift while using up the maximum pressure (kN)	 23	

Power

Type of engine	**Proxima CL 80**	**Proxima CL 90**
Power on output shaft (kW ± 2%) - at nominal speed engine and shifted speed 1,000 rpm of the output shaft		
New engine having 100 Mh max.	45.5	52
Run-in engine (over 100 Mh)	48	54.5

Tensile force

2WD / 4WD		
Type of engine	**Proxima CL 80**	**Proxima CL 90**
Maximum tensile force (kN) in swinging draw bar on concrete, tractor in emergency finish with ballast weights, with slippage to 15%	28,5 / 33,5	30 / 35

MAIN TECHNICAL PARAMETERS

Speed of tractor with engine revolutions of 2 200 rpm and parameter of rear wheels (km/h)

Tractor equipped with synchronized transmission - speed 30 km.h^{-1}

Shifted gear	Ground PTO speed	**Tractor travel speed (km.h^{-1}) at rated engine speed and at below stated tire dimensions of rear wheels**							
		14,9 - 28	**16,9 - 28**	**12,4 - 36**	**16,9 - 30**	**13,6 - 36**	**18,4 - 30**	**16,9 - 34**	**18,4 - 34**
1	293,43	5,59	5,85	6,03	6,07	6,24	6,29	6,51	6,72
2	418,20	7,97	8,34	8,59	8,65	8,90	8,96	9,27	9,58
3	590,96	11,26	11,78	12,13	12,22	12,57	12,66	13,10	13,54
4	935,05	17,81	18,64	19,20	19,34	19,90	20,04	20,73	21,43
5	1344,44	25,61	26,81	27,61	27,81	28,61	28,81	29,81	30,81
1L	293,43	1,42	1,48	1,53	1,54	1,58	1,59	1,65	1,70
2L	418,20	2,02	2,11	2,18	2,19	2,25	2,27	2,35	2,43
3L	590,96	2,85	2,99	3,07	3,10	3,19	3,21	3,32	3,43
4L	935,05	4,51	4,72	4,87	4,90	5,04	5,08	5,25	5,43
5L	1344,44	6,49	6,79	7,00	7,05	7,25	7,30	7,55	7,81
R	-364,92	6,95	7,28	7,49	7,55	7,76	7,82	8,09	8,36
RL	-364,92	1,76	1,84	1,90	1,91	1,97	1,98	2,05	2,12

L - reduction, R - reverse gear

Tractor equipped with synchronized transmission - speed 40 km.h^{-1}

Shifted gear	Ground PTO speed	**Tractor travel speed (km.h^{-1}) at rated engine speed and at below stated tire dimensions of rear wheels**							
		14,9 - 28	**16,9 - 28**	**12,4 - 36**	**16,9 - 30**	**13,6 - 36**	**18,4 - 30**	**16,9 - 34**	**18,4 - 34**
1	293,43	6,74	7,06	7,27	7,32	7,53	99,08	7,85	8,11
2	418,20	9,61	10,06	10,36	10,43	10,73	69,52	11,18	11,56
3	590,96	13,58	14,21	14,64	14,74	15,17	49,20	15,80	16,33
4	935,05	21,48	22,49	23,16	23,33	24,00	31,09	25,01	25,84
5	1344,44	30,89	32,33	33,30	33,54	34,51	21,63	35,95	37,16
1L	293,43	1,71	1,79	1,84	1,85	1,91	391,04	1,99	2,06
2L	418,20	2,43	2,55	2,62	2,64	2,72	274,37	2,83	2,93
3L	590,96	3,44	3,60	3,71	3,74	3,84	194,16	4,00	4,14
4L	935,05	5,44	5,70	5,87	5,91	6,08	122,71	6,34	6,55
5L	1344,44	7,83	8,19	8,44	8,50	8,74	85,35	9,11	9,42
R	-364,92	8,38	8,78	9,04	9,10	9,37	9,43	9,76	10,09
RL	-364,92	2,12	2,22	2,29	2,31	2,37	2,39	2,47	2,56

L - reduction, R - reverse gear

MAIN TECHNICAL PARAMETERS

Tractor equipped with synchronized transmission and reversor - speed 30 km.h^{-1}

Shifted gear	Ground PTO speed	**Tractor travel speed (km.h^{-1}) at rated engine speed and at below stated tire dimensions of rear wheels**							
		14,9 - 28	**16,9 - 28**	**12,4 - 36**	**16,9 - 30**	**13,6 - 36**	**18,4 - 30**	**16,9 - 34**	**18,4 - 34**
1	228,08	4,34	4,55	4,68	4,72	4,85	4,89	5,06	5,23
2	293,43	5,59	5,85	6,03	6,07	6,24	6,29	6,51	6,72
3	418,20	7,97	8,34	8,59	8,65	8,90	8,96	9,27	9,58
4	590,96	11,26	11,78	12,13	12,22	12,57	12,66	13,10	13,54
5	935,05	17,81	18,64	19,20	19,34	19,90	20,04	20,73	21,43
6	1344,44	25,61	26,81	27,61	27,81	28,61	28,81	29,81	30,81
1L	228,08	1,10	1,15	1,19	1,20	1,23	1,24	1,28	1,32
2L	293,43	1,42	1,48	1,53	1,54	1,58	1,59	1,65	1,70
3L	418,20	2,02	2,11	2,18	2,19	2,25	2,27	2,35	2,43
4L	590,96	2,85	2,99	3,07	3,10	3,19	3,21	3,32	3,43
5L	935,05	4,51	4,72	4,87	4,90	5,04	5,08	5,25	5,43
6L	1344,44	6,49	6,79	7,00	7,05	7,25	7,30	7,55	7,81
1R	-249,21	4,75	4,97	5,12	5,15	5,30	5,34	5,53	5,71
2R	-320,63	6,11	6,39	6,58	6,63	6,82	6,87	7,11	7,35
3R	-456,96	8,70	9,11	9,38	9,45	9,72	9,79	10,13	10,47
4R	-645,74	12,30	12,88	13,26	13,36	13,74	13,84	14,32	14,80
5R	-1021,71	19,46	20,37	20,98	21,13	21,74	21,89	22,65	23,41
6R	-1469,05	27,98	29,29	30,17	30,38	31,26	31,48	32,57	33,66
1LR	-249,21	1,20	1,26	1,30	1,31	1,34	1,35	1,40	1,45
2LR	-320,63	1,55	1,62	1,67	1,68	1,73	1,74	1,80	1,86
3LR	-456,96	2,21	2,31	2,38	2,39	2,46	2,48	2,57	2,65
4LR	-645,74	3,12	3,26	3,36	3,38	3,48	3,51	3,63	3,75
5LR	-1021,71	4,93	5,16	5,32	5,35	5,51	5,55	5,74	5,93
6LR	-1469,05	7,09	7,42	7,64	7,70	7,92	7,98	8,25	8,53

L - reduction, R - reverse gear

MAIN TECHNICAL PARAMETERS

Tractor equipped with synchronized transmission and reversor - speed 40 km.h^{-1}

Shifted gear	Ground PTO speed	**Tractor travel speed (km.h^{-1}) at rated engine speed and at below stated tire dimensions of rear wheels**							
		14,9 - 28	**16,9 - 28**	**12,4 - 36**	**16,9 - 30**	**13,6 - 36**	**18,4 - 30**	**16,9 - 34**	**18,4 - 34**
1	228,08	5,24	5,49	5,65	5,69	5,85	5,89	6,10	6,30
2	293,43	6,74	7,06	7,27	7,32	7,53	7,58	7,85	8,11
3	418,20	9,61	10,06	10,36	10,43	10,73	10,81	11,18	11,56
4	590,96	13,58	14,21	14,64	14,74	15,17	15,27	15,80	16,33
5	935,05	21,48	22,49	23,16	23,33	24,00	24,17	25,01	25,84
6	1344,44	30,89	32,33	33,30	33,54	34,51	34,75	35,95	37,16
1L	228,08	1,33	1,39	1,43	1,44	1,48	1,49	1,55	1,60
2L	293,43	1,71	1,79	1,84	1,85	1,91	1,92	1,99	2,06
3L	418,20	2,43	2,55	2,62	2,64	2,72	2,74	2,83	2,93
4L	590,96	3,44	3,60	3,71	3,74	3,84	3,87	4,00	4,14
5L	935,05	5,44	5,70	5,87	5,91	6,08	6,12	6,34	6,55
6L	1344,44	7,83	8,19	8,44	8,50	8,74	8,80	9,11	9,42
1R	-249,21	5,73	5,99	6,17	6,22	6,40	6,44	6,66	6,89
2R	-320,63	7,37	7,71	7,94	8,00	8,23	8,29	8,57	8,86
3R	-456,96	10,50	10,99	11,32	11,40	11,73	11,81	12,22	12,63
4R	-645,74	14,83	15,53	15,99	16,11	16,57	16,69	17,27	17,85
5R	-1021,71	23,47	24,57	25,31	25,49	26,22	26,41	27,32	28,24
6R	-1469,05	33,75	35,33	36,39	36,65	37,70	37,97	39,29	40,60
1LR	-249,21	1,45	1,52	1,56	1,58	1,62	1,63	1,69	1,75
2LR	-320,63	1,87	1,95	2,01	2,03	2,09	2,10	2,17	2,25
3LR	-456,96	2,66	2,78	2,87	2,89	2,97	2,99	3,10	3,20
4LR	-645,74	3,76	3,94	4,05	4,08	4,20	4,23	4,38	4,52
5LR	-1021,71	5,95	6,23	6,41	6,46	6,64	6,69	6,92	7,16
6LR	-1469,05	8,55	8,95	9,22	9,29	9,55	9,62	9,95	10,29

L - reduction, R - reverse gear

MAIN TECHNICAL PARAMETERS

Tractor equipped with reductor for creeping gears - speed 30 km.h^{-1}

Shifted gear	Ground PTO speed	**Tractor travel speed (km.h^{-1}) at rated engine speed and at below stated tire dimensions of rear wheels**							
		14,9 - 28	**16,9 - 28**	**12,4 - 36**	**16,9 - 30**	**13,6 - 36**	**18,4 - 30**	**16,9 - 34**	**18,4 - 34**
1	293,43	5,59	5,85	6,03	6,07	6,24	6,29	6,51	6,72
2	418,20	7,97	8,34	8,59	8,65	8,90	8,96	9,27	9,58
3	590,96	11,26	11,78	12,13	12,22	12,57	12,66	13,10	13,54
4	935,05	17,81	18,64	19,20	19,34	19,90	20,04	20,73	21,43
5	1344,44	25,61	26,81	27,61	27,81	28,61	28,81	29,81	30,81
1L	293,43	1,42	1,48	1,53	1,54	1,58	1,59	1,65	1,70
2L	418,20	2,02	2,11	2,18	2,19	2,25	2,27	2,35	2,43
3L	590,96	2,85	2,99	3,07	3,10	3,19	3,21	3,32	3,43
4L	935,05	4,51	4,72	4,87	4,90	5,04	5,08	5,25	5,43
5L	1344,44	6,49	6,79	7,00	7,05	7,25	7,30	7,55	7,81
1S	31,64	0,60	0,63	0,65	0,65	0,67	0,68	0,70	0,72
2S	45,09	0,86	0,90	0,93	0,93	0,96	0,97	1,00	1,03
3S	63,72	1,21	1,27	1,31	1,32	1,36	1,37	1,41	1,46
4S	100,82	1,92	2,01	2,07	2,09	2,15	2,16	2,24	2,31
5S	144,96	2,76	2,89	2,98	3,00	3,08	3,11	3,21	3,32
1LS	31,64	0,15	0,16	0,16	0,17	0,17	0,17	0,18	0,18
2LS	45,09	0,22	0,23	0,23	0,24	0,24	0,24	0,25	0,26
3LS	63,72	0,31	0,32	0,33	0,33	0,34	0,35	0,36	0,37
4LS	100,82	0,49	0,51	0,52	0,53	0,54	0,55	0,57	0,59
5LS	144,96	0,70	0,73	0,75	0,76	0,78	0,79	0,81	0,84
R	-364,92	6,95	7,28	7,49	7,55	7,76	7,82	8,09	8,36
RL	-364,92	1,76	1,84	1,90	1,91	1,97	1,98	2,05	2,12
RS	-39,35	0,75	0,78	0,81	0,81	0,84	0,84	0,87	0,90
RLS	-39,35	0,19	0,20	0,20	0,21	0,21	0,21	0,22	0,23

L - reduction, R - reverse gear, S - creeping gears

MAIN TECHNICAL PARAMETERS

Tractor equipped with reductor for creeping gears - speed 40 km.h^{-1}

Shifted gear	Ground PTO speed	**Tractor travel speed (km.h^{-1}) at rated engine speed and at below stated tire dimensions of rear wheels**							
		14,9 - 28	**16,9 - 28**	**12,4 - 36**	**16,9 - 30**	**13,6 - 36**	**18,4 - 30**	**16,9 - 34**	**18,4 - 34**
1	293,43	6,74	7,06	7,27	7,32	7,53	7,58	7,85	8,11
2	418,20	9,61	10,06	10,36	10,43	10,73	10,81	11,18	11,56
3	590,96	13,58	14,21	14,64	14,74	15,17	15,27	15,80	16,33
4	935,05	21,48	22,49	23,16	23,33	24,00	24,17	25,01	25,84
5	1344,44	30,89	32,33	33,30	33,54	34,51	34,75	35,95	37,16
1L	293,43	1,71	1,79	1,84	1,85	1,91	1,92	1,99	2,06
2L	418,20	2,43	2,55	2,62	2,64	2,72	2,74	2,83	2,93
3L	590,96	3,44	3,60	3,71	3,74	3,84	3,87	4,00	4,14
4L	935,05	5,44	5,70	5,87	5,91	6,08	6,12	6,34	6,55
5L	1344,44	7,83	8,19	8,44	8,50	8,74	8,80	9,11	9,42
1S	31,64	0,73	0,76	0,78	0,79	0,81	0,82	0,85	0,87
2S	45,09	1,04	1,08	1,12	1,12	1,16	1,17	1,21	1,25
3S	63,72	1,46	1,53	1,58	1,59	1,64	1,65	1,70	1,76
4S	100,82	2,32	2,42	2,50	2,52	2,59	2,61	2,70	2,79
5S	144,96	3,33	3,49	3,59	3,62	3,72	3,75	3,88	4,01
1LS	31,64	0,18	0,19	0,20	0,20	0,21	0,21	0,21	0,22
2LS	45,09	0,26	0,27	0,28	0,29	0,29	0,30	0,31	0,32
3LS	63,72	0,37	0,39	0,40	0,40	0,41	0,42	0,43	0,45
4LS	100,82	0,59	0,61	0,63	0,64	0,66	0,66	0,68	0,71
5LS	144,96	0,84	0,88	0,91	0,92	0,94	0,95	0,98	1,02
R	-364,92	8,38	8,78	9,04	9,10	9,37	9,43	9,76	10,09
RL	-364,92	2,12	2,22	2,29	2,31	2,37	2,39	2,47	2,56
RS	-39,35	0,90	0,95	0,97	0,98	1,01	1,02	1,05	1,09
RLS	-39,35	0,23	0,24	0,25	0,25	0,26	0,26	0,27	0,28

L - reduction, R - reverse gear, S - creeping gears

MAIN TECHNICAL PARAMETERS

Standard tractors

Independent rear PTO shaft rotation

Designation	PTO shaft speed /engine speed	PTO shaft speed /engine speed
540	540/1994	596/2200
540E	540/1519	782/2200
1 000	1000/2050	1073/2200

Tractors equipped with reversation or creeper

Rear independent PTO shaft rotation

mark	rotation	shaft rotation/engine rotation	shaft rotation/engine rotation
540/1000	**540**	540 / 1987	598 / 2200
	1000	1000 / 1950	1128 / 2200
540/540E	**540**	540 / 2005	592 / 2200
	540E	540 / 1584	750 / 2200

Front PTO shaft

Sense of rotation	PTO shaft speed/engine speed	PTO shaft speed/engine speed
right	1000/1818	1210/2200
***left**	1000/1870	1176/2200

* - option

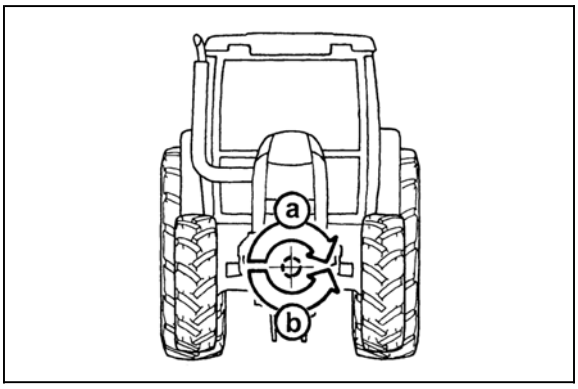

E80

MAIN TECHNICAL PARAMETERS

Contour and tread turning diameters tractors without front drive

Wheel tread	front	1515 mm	Tire size	front	9,00-16	Left	Right
	rear	1500 mm		rear	16,9R34		
Tread diameter (mm)						8090 mm	8260 mm
	with inner rear wheel braked					7200 mm	7290 mm
Contour diameter (mm)						8710 mm	8920 mm
	with inner rear wheel braked					7820 mm	7950 mm

Contour and tread turning diameters tractors with front drive

Wheel tread	front	1585 mm	Tire size	front	13,6R24	Left	Right
	rear	1500 mm		rear	16,9R34		
Tread diameter (mm)	without engaged front driving axle					11150 mm	11100 mm
	without engaged front driving axle with inner rear wheel braked					9360 mm	9110 mm
	with engaged front driving axle					11970 mm	11930 mm
	with engaged front driving axle with inner rear wheel braked					8025 mm	8025 mm
Contour diameter (mm)	without engaged front driving axle					11690 mm	11600 mm
	without engaged front driving axle with inner rear wheel braked					9900 mm	9620 mm
	with engaged front driving axle					12510 mm	12430 mm
	with engaged front driving axle with inner rear wheel braked					8565 mm	8525 mm

Calculation of tractor load limit

Connection of machines to the front or rear hydraulic arms must not exceed the allowed total load of the tractor, individual axles and tractor tyres. Therefore make sure before buying the aggregation that these assumptions are fulfilled using the following calculation:

The following data must be known for the calculation:

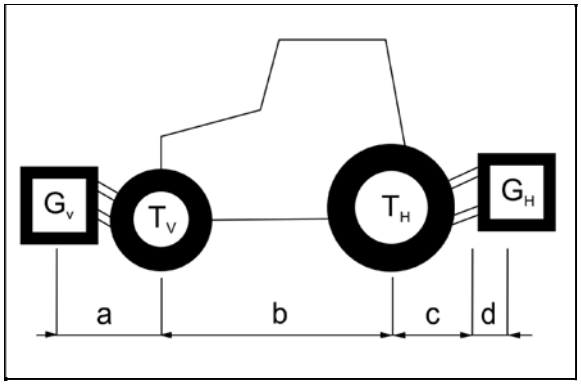

GT

$\mathbf{T_L}$ (kg) - instantaneous mass ❶

$\mathbf{T_v}$ (kg) - instantaneous front axle load ❶

$\mathbf{T_H}$ (kg) - instantaneous rear axle load ❶

$\mathbf{G_H}$ (kg) - total machine weight suspended in the rear / rear load ❷

$\mathbf{G_V}$ (kg) - total machine weight suspended in the front / front load ❷

a (m) - distance between the gravity centre of the front carried machine / front load and load through the centre of the front axle ❷ ❸

b (m) - tractor wheelbase ❶ ❸

c (m) - distance between the centre of the rear axle and the centre of fixing holes of lower hydraulic arms ❶ ❸

d (m) - distance between the centre of fixing holes of lower hydraulic arms and the gravity centre of the machine suspended in the rear / rear load ❷

❶ see instructions for use of the tractor

❷ see instructions for use of the machine

❸ machine measurement

Rear carried machine or front and rear carried combination

1. Calculation of the minimum front axle load $G_{V\ min}$

The calculated value of the minimum front axle load should be recorded in the table.

$$G_{V\,min} = \frac{G_H \bullet (c+d) - T_V \bullet b + 0{,}2 \bullet T_L \bullet b}{a + b}$$

2. Calculation of the minimum rear axle load $G_{H\ min}$

The calculated value of the minimum rear axle load should be recorded in the table.

$$G_{V\,min} = \frac{G_V \bullet a - T_H \bullet b + 0{,}45 \bullet T_L \bullet b}{b + c + d}$$

Front carried machine

4. Calculation of the real total load G_{tat}

If the necessary rear axle load cannot be reached with the rear attached machine (G_H), the weight of the rear carried machine must be increased to the minimum allowed load.

The real values and allowed values specified in the instructions for use of the tractor designed for the total load should be recorded in the table.

$$G_{tat} = G_V + T_L + G_H$$

3. Calculation of the real front axle load $T_{v\ tat}$

If the necessary front axle load cannot be reached with the front attached machine (G_V), the weight of the front carried machine must be increased to the minimum allowed load.

The real values and allowed values specified in the instructions for use of the tractor designed for the front axle should be recorded in the table.

$$T_{V\,tat} = \frac{G_V \bullet (a + b) + T_V \bullet b - G_H \bullet (c + d)}{b}$$

5. Calculation of the real rear axle load $T_{h\ tat}$

The real values and allowed values specified in the instructions for use of the tractor valid for the rear axle load should be recorded in the table.

$$T_{H\,tat} = G_{tat} - T_{V\,tat}$$

6. Load-bearing capacity of tyres

The calculation of the double value (two tyres) of the allowed tyre load (see, e.g., documents for tyre manufacturers) should be recorded in the table.

MAIN TECHNICAL PARAMETERS

Allowed load of the tractor and axles

Table
The real value according to the calculation must be lower or equal to the allowed value specified by the tractor manufacturer.

	Real value according to the calculation	Allowed value according to the manufacturer
Total tractor weight		5,500 kg
Front axle load		2,600 kg
Rear axle load		5,000 kg

The driveability of the front axle must be preserved under all load conditions, i.e., min. 20% of the real tractor weight must lie on the front axle.

During aggregation with side moving machines, side ditch trimmers and similar types of aggregation, there is an unequal distribution of the load on the right and on the left side of the tractor axle. It is necessary to ensure that the load on one side of the axle does not exceed ½ of the allowed load of the rear axle of the tractor.

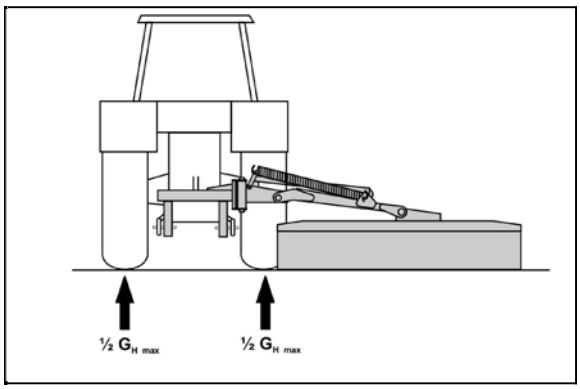

GT_6

$G_{H\ max}$ - allowed load of the rear axle

INDEX

A

Accumulator battery 103
Accumulator battery maintenance 104
Acquaintance with tractor 23
Additional weights 99
Adjustable stop 74
Adjusting the front grill headlights 107
Adjusting the lowering rate of the front three-point hitch 89
Adjustment 133
Adjustment of bowden cable 140
Adjustment of free travel of brake pedals 137
Adjustment of free travel of clutch pedal 137
Adjustment of hitch for single-axle trailers 140
Adjustment of mechanical control of PTO clutch 138
Adjustment of pneumatic control of PTO clutch with mechanical connection 139
Adjustment of toe-in of the wheels of the front driving axle 95
After work with front implements and in case of cooler clogging 21
Air brakes of trailers and semi-trailers 56
Air circulation in cabin control (D) 33
Air cleaner 21
Air filter with active carbon 31
Air filter with active carbon 130
Air-condition and heating registers (A) 35
Air-conditioning maintenance 130
Alternator 104
Alternator maintenance 105
Amount of oil taken from outer hydraulic drives 81
Antifreeze solution for tyre filling 101
Automatic mouth of the CBM stage hitch 64

B

Back assembly of air filter elements 124
Basic service information 103
Battery disconnector 45
Bleeding of hydraulic brakes of trailer 135
Bleeding of hydraulic clutch circuit 137
Bleeding of pressure air brake system for trailers 134
Bleeding of rear wheel brakes 134
Bleeding of tractor brake system 133
Brake fluid replacement 129

C

Cab filtration 21
Calculation of tractor load limit 159
Calibration of travel speed of digital dashboard 141
Carbon filter installation instructions 130
Cleaning the heating filters 129
Cogged belt tension 133
Condition of steeringability 145
Connecting and disconnecting quick couplings of trailer hydraulic brakes 58
Connecting and disconnecting quick-couplers 81
Connecting machines and tools to External hydraulic circuit 82
Console with a ? 80 ball module 65
Contamination indicator function 123
Contour and tread turning diameters tractors with front drive 158
Contour and tread turning diameters tractors without front drive 158
Control of front driving axle 55
Control of the external hydraulic circuit front outlets 83
Control panel on right cab pillar 35
Controlling front three-point hitch 82
Controlling the inner hydraulic circuit 74
Coolant heater 49
Cooling system 20
Coupling of a single-axle trailer 65
Coupling with a trailer or semi-trailer 66

D

Dashboard 36
Diesel particle filter 51
Diesel particle filter - system failures signalization 51
Diesel particle filter failure codes 52
Diesel particle filter maintenance 132
Diesel particle filter regeneration 52
Different functions of outer hydraulic circuit control levers 79
Different functions of outer hydraulic circuit control levers-one section distributor 80
Differential lock 55
Direction lights, lower beam head lights, head lights and horn switches 39
Display of PTO speed 37
Drainage and inspection holes 127
Draining condensate from the air reservoir 131
Draining oil from engine 121
Drive away 50
Drive of machines with greater inertia masses 72
Driver´s seat 29
Driver's seat 29
Driver's seat Mars Svratka 28
Driver's seat Sears 29
Driving operation 12
Driving with agricultural machines attached to the front three-point hitch 89
Driving with engaged front driving axle 55
Dry air filter maintenance - pollution indicator 123

E

Electric installation 103
Engagement of the front output shaft Zuidberg 71
Engine heating 49
Engine oil level 19
Engine travel clutch adjustment 140
Exterior rear hydraulic arms controls 77

F

Fast cooling of the space of the cabin 33
Fast heating of the cabin area 33
Filling and filter replacement 111
Filling, controlling and draining hole of oil of front drive axle 129
Filling, controlling and draining hole of oil of front wheels reducers 129
Fire prevention principles 14
Fixed and free position of the lower hydraulic draw-bars 86
Foot brakes 56
Free (floating) position 74
From 100 hours of operation 61
Front bonnet opening 121
Front drive axle fenders 96
Front hook 63
Front non-driving axle 117
Front outlets of the external hydraulic circuit 83
Front passenger´s seat notification 15
Front PTO 128
Front PTO oil 114
Front PTO shaft 71
Front PTO shaft 157
Front three-point hitch 88
Front three-point hitch 118
Front wheel drive switch 40
Front wheels toe-in 94
Front wheels track of front drive axle in tractors equipped with non-removable discs 93
Front windshield (B) defrosting 35
Fuel filter element replacement 122
Fuel for Zetor engines which are equipped with diesel paricle filter 116
Fuel system leaks 19
Fuel system venting 122
Fuel tank 45
Fuel tank drain plug 45
Fuels, coolants and lubricants used - amounts 112
Fuse box 105

G

Gauges of the front wheels of the front drive axle of the tractors equipped with screwed footer discs 92
Gauges of the tractor rear wheels equipped with screwed footer discs 96
Gear shifting 53
Gear shifting from higher to lower gears 54
Gear shifting from lower to higher gears 53
Gear shifting lever 42

INDEX

Gear shifting scheme 42
General principles of new tractor run-in in first 100 hours of operation 61
General safety regulations 11

H

Hand control lever of PTO shaft clutch 69
Hand control lever of PTO shaft clutch with pneumatic control 69
Heating control panel, * air-condition 32
Heating valve control (A) 32
Height adjustment and disassembly of the CBM stage hitch 63
Height adjustment of the lifting draw-bars 86
Hitch for a single-axle CBM semi-trailer 65
Hitch for a single-axle semi-trailer 117
Hitch mouth for a trailer 118
Hitches 21
Hitches 85
Hook of the mounting for a single-axle trailer 66
Hydraulic brake liquid for the tractors 116
Hydraulic brakes of trailers 58
Hydraulic lock of the front three-point hitch 89
Hydraulic system 73
Hydraulic system 73
Hydraulic system sensitivity control 75
Hydraulics control panel 73
Hydrostatic steering 20

CH

Change of front wheels track with front drive axle 92
Change of load capacity of front tires % 150
Change of load capacity of rear tires % 150
Change of the front wheel tread at front non-driven axle 91
Changing suction filter 128
Charging control 105
Check and adjustment of service and parking brakes 135
Check and replacement of oil in gearbox, axle drive and rear axle portals 127
Checking amount of oil in hydrostatic steering tank 124
Checking oil levels in engine 121
Checking the adjustment of the cab roof headlights 108
Checking the adjustment of the front grill headlights 107
Checking the air systems for leaks 131
Chocking of front wheels 100

I

If engine does not start 47
Ignition system failure signalization 48
Immediately after cooling the cabin 34
Immediately after start 48
Important warnings 59
In first 10 hours of operation 61
Independent rear PTO shaft rotation 157
Internal lighting 25

L

Lay out of fuses in the fuse box 106
Leaving the tractor 59
Lifting force of the three-point hitch 151
Lights switch 39
Lights switch between the grill and the cabin 39
Limiting draw-bars 86
Liquid brakes 20
Liquid for the cooling system of the tractors 116
List of lamps 108
Loading capacity of front tires 146
Loading capacity of rear tires 148
Location of serial numbers 9
Locking control levers 78
Lower draw bar with CBM hooks 87
Lower draw bar with slipping out end pieces 87

M

Main air filter element regeneration 124
Main dimensions of tractor (mm) 143
Main technical parameters 143
Maintenance and treatment of tyres 132
Maintenance instruction of dry air filter 123
Maintenance instructions 121
Manipulation with starter 48
Manual throttle 42
Max. allowed load of front axle tractors without front drive (kg) 145
Max. allowed load of rear axle (kg) 145
Max. allowed weight of set 'tractor + hitched implement' (kg) 145
Max. permitted loading of the front axle tractors with front drive (kg) 145
Maximum transferred output 72
Mixed regulation of lifting the rear three-point hitch 76
Modular system of hitches for trailers and semi-trailers 64
Monthly performed actions 110
Motor oils 112
Multistage adjustable suspension 63

O

Oil for the front driving axle 112
Oil for the front driving axle 115
Oil for the hydrostatic steering of the tractors 112
Oil for the hydrostatic steering of the tractors 115
Oil to gear systems of tractors 112
Oils for tractor transmission gearing 114
Oils for Zetor engines which are equipped with diesel particle filter 113
One-hose and two-hose brakes 57
One-hose brakes 57
Opening doors from the outside 23
Opening the door from the inside 23
Operation 47
Operation of heating or air-condition with tractor´s work 34
Other recommended service fillings tested on Zetor tractors 113
Outer hydraulic circuit 77
Outer hydraulic circuit controls 78

P

Parking brake adjustment 136
Parking brake lever, pto shaft control lever and pick up hitch control lever 44
Passenger´s seat 27
Pedals and levers 42
Permitted combinations of wheels for tractors 150
Pin of coupling switching off 118
Plastic lubricant for the tractor 115
Play adjustment of front wheel roller bearings at tractor without front driving axle 140
Position regulation of the lifting of the rear three-point hitch 75
Possible adjustable tracks of the front wheels of the front driving axle of the tractors 92
Pouring oil to engine 122
Power 151
Power regulation of the lifting of the rear three-point hitch 76
Preventive daily maintenance 14
Preventive daily maintenance 19
Preventive daily service 19
Principles for operating tractors equipped with front end loader 17
Procedure of draining liquid from the tyres 101
Procedure of filling the tyres with liquid 100
Proper clothing 11
Proper function of the heating and air-condition system 33
Protection of cab against aerosols 16
Pto drive of agricultural machines 69
PTO selection control lever 43
PTO speed control lever 43
PTO speed control lever 70
PTO speed control lever - tractor equipped with reversor or reductor for creeping gears 44
PTO speed control lever - Tractor equipped with reversor or reductor for creeping gears 71
Push button of rear, front differential locks 40

Q

Quick-couplings with drip collection 81

R

Rear independent PTO shaft rotation 157
Rear three-point hitch 85
Rear view mirrors 24
Rear wheel track change 97

INDEX

Rear wheels wheel track 96
Rear window 24
Replaceable end points of rear PTO shaft 70
Replacement of the transmission oil cleaner element with hydraulic pump suction filter 128
Replacing coolant 126
Replacing dry filter locking element 124
Replacing full-continuous motor oil filter 122
Replacing oil and hydrostatic steering filter element 125
Replacing the hoses of hydrostatic steering 126
Reversing lever 43
Reversing lever 53
Reversion lever pin 118
Right rear panel 24
Road and reduced speeds shifting lever 43
Running-in the tractor 61

S

Safety cab 23
Safety instructions for lubrication of the tractor 117
Safety instructions for users 11
Safety labels 18
Safety principles of working with the three-point hitch 85
Securing lower draw bars with CBM hooks 88
Selection of holes in the bracket 87
Service brake adjustment 136
Service inspections 109
Setting the front axle knees (extensions) 91
Setting the wheel toe-in at tractors without front driving axle 95
Setting wheel stops with front drive axle 94
Shifting road and reduced speeds 53
Short functional test 22
Side window 24
Solid front drive axle 117
Specification of oil for the front driving axle 113
Specification of oil for the tractor hydrostatic control system 113
Specification of oil for tractor transmission devices 113
Specification of oils for Zetor engines equipped by diesel particle filter 113
Speed of tractor with engine revolutions of 2 200 rpm and parameter of rear wheels (km/h) 152
Standard tractors 157
Starting the engine 47
Starting the engine 12
Starting the engine while using coolant heater 50
Steps performed daily before the start of work 109
Steps performed every 100 hours of work 109
Steps performed every 50 hours of work 109
Steps performed every 500 hours of work 109
Steps performed outside the interval of 500 hours of work 110
Stopping the engine 59
Stopping the tractor - manual brake 58
Storing the tractor 132
Sun screen 25
Swinging draw-bar console module 64
Swinging draw-bar console with a fixed pin module 64
Switch air-condition (C) 32
Switch box 40
Switch box key in the position (0) 41
Switch box key in the position (I) 41
Switch box key in the position (II) 41
Switch of warning lights 39
Switchers, switches and levers 38
Switching on the front output shaft Zuidberg 44

T

Technical maintenance of the tractors after a general overhaul of the main groups 118
Technical specifications of engines of tractors Proxima (Stage III B 16V) 144
Tensile force 151
The gauges of the tractor rear wheels equipped with solid discs 97
Three-point hitch 118
Three-point hitch lowering speed control 74
Tilt steering wheel 30
Tilting and protrusion of steering wheel 30
Towing bar 65
Tractor equipped with reductor for creeping gears - speed 30 km.h-1 155
Tractor equipped with reductor for creeping gears - speed 40 km.h-1 156
Tractor equipped with synchronized transmission - speed 30 km.h-1 152
Tractor equipped with synchronized transmission - speed 40 km.h-1 152
Tractor equipped with synchronized transmission and reversor - speed 30 km.h-1 153
Tractor equipped with synchronized transmission and reversor - speed 40 km.h-1 154
Tractor greasing plan 117
Tractor maintenance 109
Tractors equipped with front end loader 16
Tractors equipped with reversation or creeper 157
Trailer brakes 20
Transport use 63
Transportation of persons, operation 13
Travelling down the slope 54
Travelling up the slope 54
Two-hose brakes 57
Tyres and wheels 22

U

Uncoupling of a single-axle trailer 66
Upper linkage bracket 118
Upper pull rod 86

V

Valve for filling tyre tubes with liquid 100
Venting hydraulic circuit of hydrostatic steering 126

W

Warning indication of air pressure drop 56
Warning signalization of hydrostatic steering failure 59
Washer control 26
Washer nozzle 25
Ways to regulate inner hydraulic circuit 73
Weights in front of the bonnet mask 99
Weights of rear wheels 99
Weights of the front three-point hitch 99
Wheel tread change 91
Windshield washer tank 26
Work with PTO shaft 69
Working and transport position of the front three-point hitch 89
Working pressure of air brakes 132

Z

ZETOR service fillings 112
Zetor tractors used for work in the woods 18

Operator's manual
Proxima CL 80
Proxima CL 90

Edition: 7-100-2017
Publication No.: 222.213.004
ZETOR TRACTORS a.s.
Department of Technical Documentation
Trnkova 111
628 00
Brno

Zetor

www.zetor.com
zetor@zetor.com

Made in EU