TRACTOR 6185

TRADITION TO BE RENEWED

High performance, convenience and durability are some of the differentials that make Tractor 6185 an excellent option for field routine, especially in scale agriculture.

AGRALE

www.agrale.com.br
agraleSA

- Prepared for precision farming
- Higher number of working speeds
- Speed Memory
- Torque of 710 N.m

AGRALUB PARTS & SERVICES WARRANTY

https://tractormanualz.com/

TRACTOR 6185

Generated on 29/05/2022 03:27:29

ENGINE	
Brand / model	MWM 229-6 TCE
No. of Cylinders	6 - Vertical in line / 6.200 dm
Aspiration	Turbo
Power	175 cv (129 kW) @ 2.300 rpm
Maximum Power in PTO	NI
Maximum Torque	72 Kgf.m @ 1.300 - 1.500 rpm
DRIVING TRANSMISSION	
Type	Synchronized mechanical
No. of Gears	24 Front /12 Reverse
Front axle	Limited slip center differential (4WD)
CLUTCH	
Type	Simple disc
Drive	Mechanical
POWER TAKEOFF	
Drive	Electro-hydraulic
Type / drive	Independent, with multidisc wet clutch
Nominal Speed	540 rpm @ 2083 engine rpm and 1000 rpm @ 2136 engine rpm
HYDRAULIC SYSTEM	
Pressure	180 kgf/cm
Maximum Flow	126 L/min
Remote control	4 ways double command Opcional: 1 control remoto de flujo continuo
Hitch	3 Points - Category III
Lift capacity	6.700 kg

BRAKES	
Service Brake	Wet disc oil bath
STEERING WHEEL	
Type	Hydrostatic
WHEELSETS	
Standard Front Tires	18.4 26" R1
Standard Rear Tires	24.5 32" R1
Optional Weelsets	Muddy soil tires 14.9 28 R2 / 23.1 30 R2 Row crop tires 18.4-26/20.8-38 Double Rear Wheel 18. 4-26R1-20.8-38R1 Land farm tires 16.9-30R1/24.5-32R1 14.9-28R1 / 23.1-30R1
ELECTRIC SYSTEM	
Battery	12V 135 A.h
Alternator	14V 120 A
CAPACITIES	
Fuel Tank	280 L
DIMENSIONS	
Width	2670 mm
WEIGHTS	
Shipping weight	7.020 kg
Operating weight (curb weight)	9.500 kg

MARCHAS		1º	2º	3º	4º
FRENTE	B	1,2	1,8	2,7	3,8
	M	3,9	5,9	8,8	12,3
	A	12,6	18,8	28,0	39,2
FRENTE REDUZIDA	B	1,0	1,5	2,2	3,1
	M	3,2	4,8	7,2	10,1
	A	10,3	15,4	22,9	32,2
RÉ	B	1,0	1,6	2,4	3,3
	M	3,4	5,1	7,6	10,7
	A	10,9	16,4	24,4	34,2

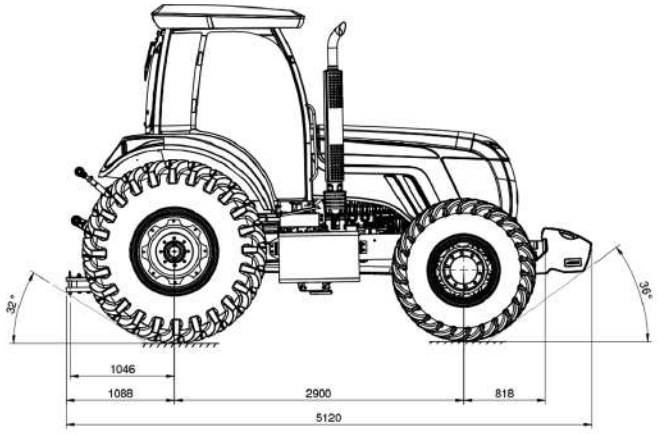

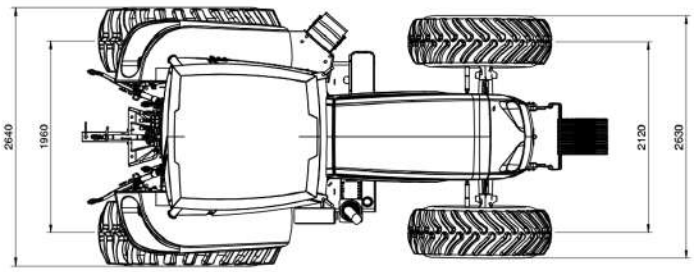

https://tractormanualz.com/