SERVICE MANUAL

DISTRIBUTION SYSTEMS

Puma 165 CVX
Puma 180 CVX
Puma 195 CVX
Puma 210 CVX
Puma 225 CVX

84172758A 0 06/02/2009
A
https://tractormanualz.com/

Contents

DISTRIBUTION SYSTEMS - A

PRIMARY HYDRAULIC POWER SYSTEM A.10.A
Puma 165 CVX , Puma 180 CVX , Puma 195 CVX , Puma 210 CVX , Puma 225 CVX

PRIMARY HYDRAULIC POWER SYSTEM Electro-hydraulic remote valve A.10.C
Puma 165 CVX , Puma 180 CVX , Puma 195 CVX , Puma 210 CVX , Puma 225 CVX

SECONDARY HYDRAULIC POWER SYSTEM. A.12.A
Puma 165 CVX , Puma 180 CVX , Puma 195 CVX , Puma 210 CVX , Puma 225 CVX

HYDRAULIC COMMAND SYSTEM A.14.A
Puma 165 CVX , Puma 180 CVX , Puma 195 CVX , Puma 210 CVX , Puma 225 CVX

ELECTRICAL POWER SYSTEM A.30.A
Puma 165 CVX , Puma 180 CVX , Puma 195 CVX , Puma 210 CVX , Puma 225 CVX

ELECTRONIC SYSTEM A.50.A
Puma 165 CVX , Puma 180 CVX , Puma 195 CVX , Puma 210 CVX , Puma 225 CVX

FAULT CODES A.50.A
Puma 165 CVX , Puma 180 CVX , Puma 195 CVX , Puma 210 CVX , Puma 225 CVX

PNEUMATIC SYSTEM A.20.A
Puma 165 CVX , Puma 180 CVX , Puma 195 CVX , Puma 210 CVX , Puma 225 CVX

https://tractormanualz.com/

DISTRIBUTION SYSTEMS - A

PRIMARY HYDRAULIC POWER SYSTEM - 10.A

Puma 165 CVX
Puma 180 CVX
Puma 195 CVX
Puma 210 CVX
Puma 225 CVX

https://tractormanualz.com/

Contents

DISTRIBUTION SYSTEMS - A

PRIMARY HYDRAULIC POWER SYSTEM - 10.A

TECHNICAL DATA
PRIMARY HYDRAULIC POWER SYSTEM
Torque 4
Special tools 4
Hydraulic pump
Variable displacement pump - General specification 6

FUNCTIONAL DATA
PRIMARY HYDRAULIC POWER SYSTEM
Hydraulic schema 8
Static description 11
Static description Pressure testing 17
Relief valve
Static description Air bleed relief valve 22
Hydraulic pump
Variable displacement pump - Dynamic description 23
Variable displacement pump - Static description 25
Variable displacement pump - Sectional view 28
Charge pump
Exploded view 29
Compensator
Exploded view 30
Hydraulic line
Overview 32

SERVICE
Power beyond
Remove 35
Install 36
Hydraulic pump
Variable displacement pump - Remove 37
Variable displacement pump - Overhaul 40
Variable displacement pump - Install 44
Compensator
Overhaul 46
Filter
Remove 48

https://tractormanualz.com/

Install 50
Replace 51

DIAGNOSTIC
PRIMARY HYDRAULIC POWER SYSTEM
Troubleshooting 52

https://tractormanualz.com/

PRIMARY HYDRAULIC POWER SYSTEM - Torque

Variable flow closed centre hydraulic pump	**135 Nm** (**99.6 lb ft**)
Vane pump	**60 Nm** (**44.3 lb ft**)
Priority valve	**50 Nm** (**36.9 lb ft**)
Pressure compensating valve	**15.5 Nm** (**11.4 lb ft**)
Main suction filter housing	**40 Nm** (**29.5 lb ft**)

PRIMARY HYDRAULIC POWER SYSTEM - Special tools

DESCRIPTION	PART NUMBER
Tee adaptor 11/16 ORFS female x 11/16 ORFS male x 7/16 UNF female	380000570*
Tee adaptor 7/16 JIC female x 7/16 JIC male x 7/16 UNF female	380000571*
Adaptor M10 banjo x 7/16 UNF female	380000572*
Tee adaptor 9/16 ORFS female x 9/16 ORFS male x 7/16 UNF female	380000572*
Blanking Cap 9/16 ORFS	380000573*
Blanking Cap 7/16 ORFS	380000575*
Adaptor 7/16 UNF female x 1/2 BSP male	380000576*
Adaptor 7/16 UNF female x M12 x 1.5p male	380000577*
Adaptor 7/16 UNF female x M14 x 1.5p male	380000578*
Adaptor M14 banjo x M14 x 1.5p female	380000579*
Tee adaptor 7/16 UNF female x 1/4 BSP hose tail x 1/2 hose	380000580*
7/16 UNF male Quick release adaptor	**380000492***
Adaptor M10 x 1.0p x 7/16 UNF female	**380000493***
Tee adaptor 1” ORFS female x 1” ORFS male x 7/16 UNF female	380000517
Blanking Cap 11/16 ORFS	380000599*
Pressure Gauge 0–10 bar	380000551#
Pressure Gauge 0–40 bar (5 off)	**380000552#**
Pressure Gauge 0–250 bar	380000553#
Remote valve coupling	380000554#
Quick release adaptor	**380000543**
Pressure gauge hose	**380000545#**
1/8 NPT fitting to attach hose 292246 to gauge	**380000544#**
Adaptor M10 x 1.0p x 7/16 JIC male (enables use of gauges with 7/16 JIC hoses if used)	**380000494**
diagnostic switch	**380000488**
Bypass connector	**380000561**
Trailer brake fitting	**380000550#**
Flow Meter **120 l/min**)	
* Part of hydraulic adaptor kit **380000464**	
# Part of hydraulic pressure test kit **380000240**	
Remote valve check valve removal tool	**380002720**

https://tractormanualz.com/

Charge pump pressure test adaptor	**380200015**
Lift ram pressure test tee piece 13/16 ORFS	**380200012**
Oil cooler pressure test adaptor	**380200006**
Hydraulic pump pressure test adaptor	**380200090**
Lube pressure test adaptor	**380200091**

https://tractormanualz.com/

Hydraulic pump Variable displacement pump - General specification

Charge Pump

Type	Internal rotor gear pump
Charge Pump displacement	**90 cm³/rev**
Output @ engine speed **2200 RPM** Standard flow	**250 l/min** (**66 US gpm**)
Output @ engine speed **2200 RPM** Hi flow	**250 l/min** (**66 US gpm**)
Charge pressure filter dump valve : Crack open	 **10 bar** (**145.0 psi**)
Fully open	**15 bar** (**217.5 psi**)
Charge pressure	**2 - 4 bar** (**29.0 - 58.0 psi**)
Charge pressure switch closes	**1 bar** (**14.5 psi**)

Variable displacement pump

Type	Variable Displacement Closed Centre Load Sensing Piston Pump
Rotation	Clockwise
Pump speed @ engine speed **2400 RPM** maximum rated speed (Theoretical)	**3000 RPM**
Pump speed @ engine speed **2200 RPM**	**2750 RPM**
Output @ engine speed **2200 RPM** (Standard flow)	**150 l/min** (**39.6 US gpm**)
Output @ engine speed **2200 RPM**(High flow)	**170 l/min** (**44.9 US gpm**)
Piston Pump displacement (Standard flow)	**56 cm³/rev**
Piston Pump displacement (High flow)	**63 cm³/rev**
Low Standby Pressure	**26 bar** (**377.0 psi**) ± **1 bar** (**14.5 psi**)
Low Standby Pressure (with Italian trailer brakes)	**36 bar** (**522.0 psi**)
High Standby Pressure	**210 bar** (**3045.00 psi**) ± **5 bar** (**72.5 psi**)
Maximum system pressure	**245 bar** (**3552.5 psi**)± **5 bar** (**72.5 psi**)
Cooler By Pass valve	**5.8 bar** (**84.1 psi**).

https://tractormanualz.com/

https://tractormanualz.com/

PRIMARY HYDRAULIC POWER SYSTEM - Hydraulic schema

1. Steering motor
2. Trailer brake valve (Italian)
2a. Trailer brake valve (Universal)
3. Priority valve (refer to **Priority valve - Dynamic description (A.14.A)**
4. Load levelling valve
5. Italian trailer brake Manifold
6. Suspension control valve
7. Hydraulic top link and right hand link diverter valve
8. Hydrostatic motor
9. Electro-hydraulic remote valve
10. Electro-hydraulic remote valve
11. Electro-hydraulic remote valve
12. Distribution manifold
13. Electronic draft control valve
14. Electro-hydraulic remote valve
15. Electro-hydraulic remote valve
16. Power beyond manifold
17. CVT control manifold
18. Low pressure distribution Manifold
19. Vane pump (low pressure supply- **22 - 25 bar** (**319.0 - 362.5 psi**) (refer to **Hydraulic pump - Dynamic description (A.12.A)**
20. Variable displacement closed centre load sensing pump (refer to **Hydraulic pump Variable displacement pump - Dynamic description (A.10.A)**
21. Suction filter
22. Vacuum switch
23. Temperature switch
24. Cooler
25. Lubrication

https://tractormanualz.com/

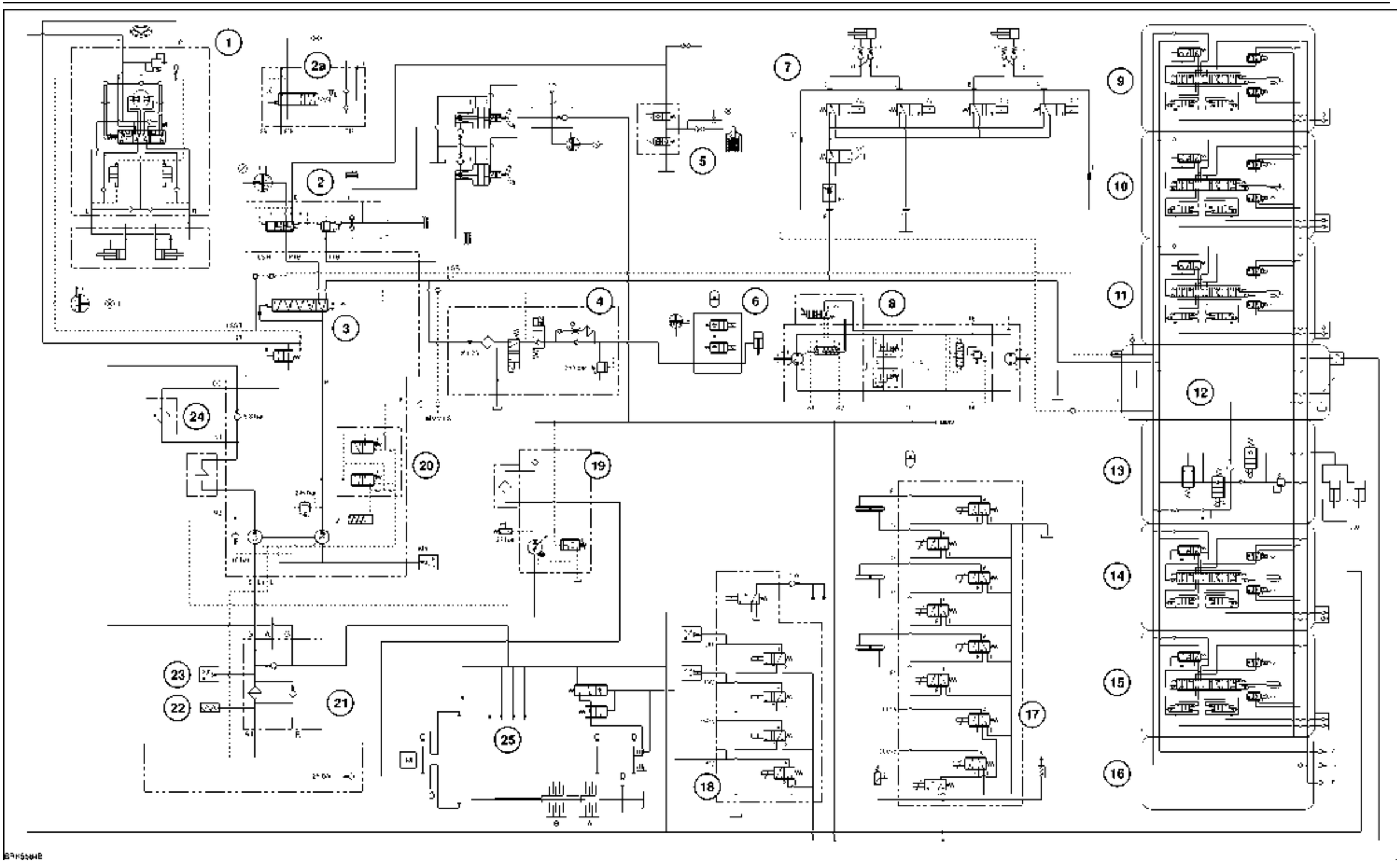

BAIL08CVT135JSA 1

https://tractormanualz.com/

https://tractormanualz.com/

PRIMARY HYDRAULIC POWER SYSTEM - Static description

The hydraulic systems can be separated into the following circuits : -

High pressure circuit

Rear hydraulic lift with electronic draft control including external control
Remote control valves
Trailer brake (where fitted)
Suspended front axle (where fitted)

Steering circuit

Steering motor and cylinders
Turn assist Valve (where fitted)
Autoguidance valve (where fitted)

Low pressure circuit

(Supplied by vane pump)

Rear power take off (PTO) and brakes
Differential lock
Front wheel drive engagement
Transmission clutch and synchroniser engagement
Front axle brake booster unit
Power boosted master cylinder
Front P.T.O (Where Fitted)

Lubrication circuit

(Supplied by vane pump)

PTO clutch plates
Transmission clutch plates
Transmission shaft pressure lube
Pump drive gear bearing
Hydraulic lift cross shaft
The high pressure circuit is a closed centre load sensing design.

Transmission	High pressure hydraulic system	Hydraulic pump	Hydraulic power lift	Remote valves
Continuously Variable Transmission	Closed system	**120 l/min** CCLS variable displacement pump **150 l/min**Hi flow CCLS variable displacement pump	Electronic power lift control	Closed system

https://tractormanualz.com/

Main hydraulic components

1.Remote valve assembly
2.Low pressure distribution valve
3.Load levelling valve (Suspension models only)
4.Brake Lubrication manifold
5.Low pressure system relief valve (no longer used)
6.Hydrostatic unit for CVT transmission
7.Transmission valve manifold and accumulator
8.Hydraulic pump and filter assembly
9.Trailer brake valve (where fitted)
10.Priority valve manifold

https://tractormanualz.com/

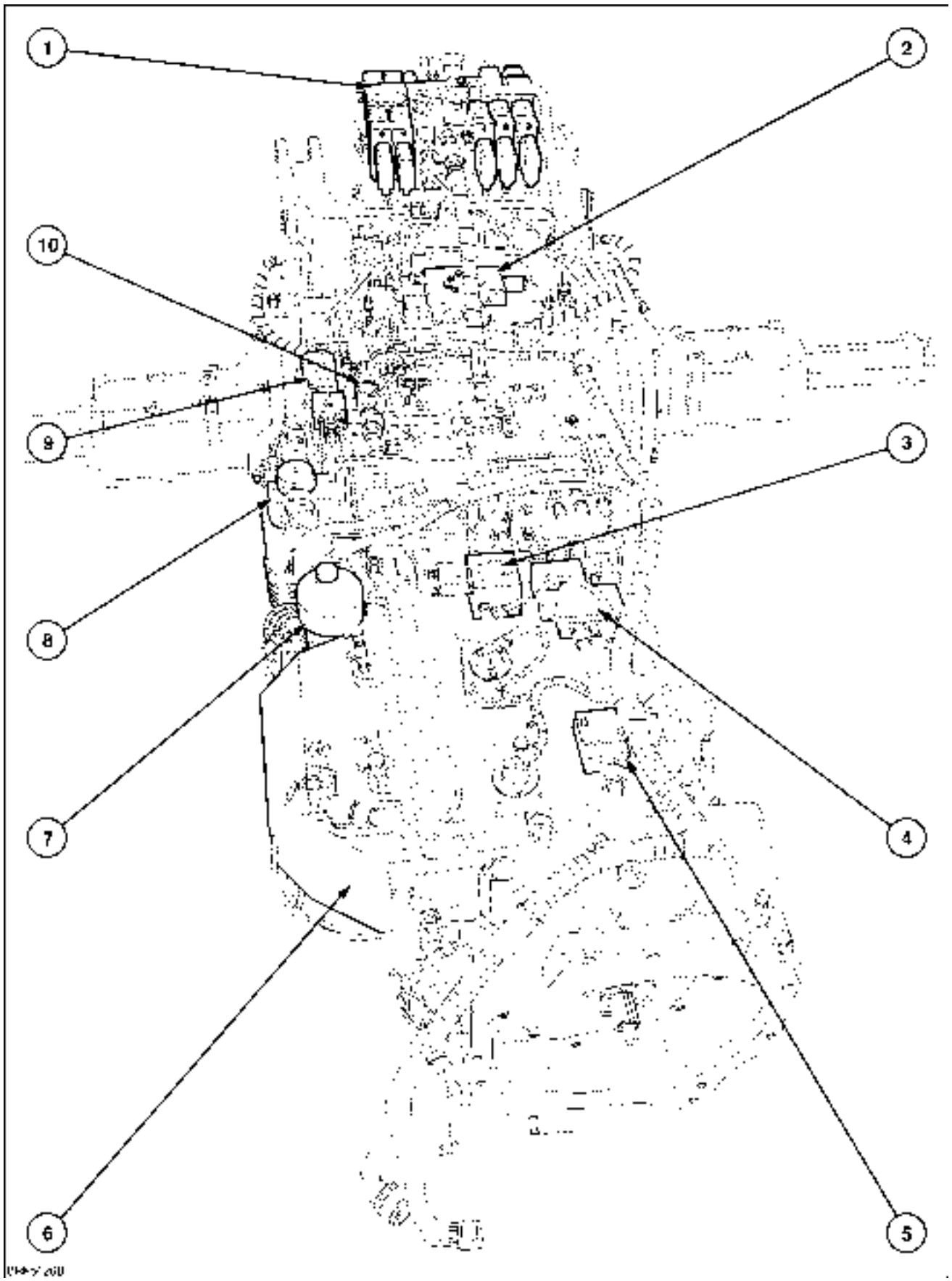

BAIL08CVT017HSA 1

https://tractormanualz.com/

Hydraulic pump assembly

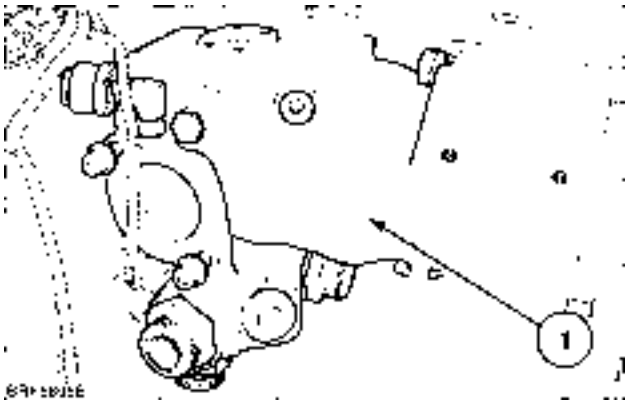

BAIL08CVT085ASA 2

The variable flow closed centre load sensing hydraulic pump assembly is mounted on the right hand side of the rear axle centre housing and contains within its body two hydraulic pumps. A charge pump of the gear type to supply oil at a charge pressure of **10 bar** (**145.0 psi**) to a variable flow closed centre load sensing hydraulic piston pump and a variable flow closed centre load sensing piston type hydraulic pump supplying oil to the high pressure circuit (Refer to **Hydraulic pump Variable displacement pump - Static description (A.10.A)**).

There are 3 filters attached to the hydraulic pump assembly. The main suction filter **(1)**, the vane pump filter **(2)**, and the charge filter **(3)**.

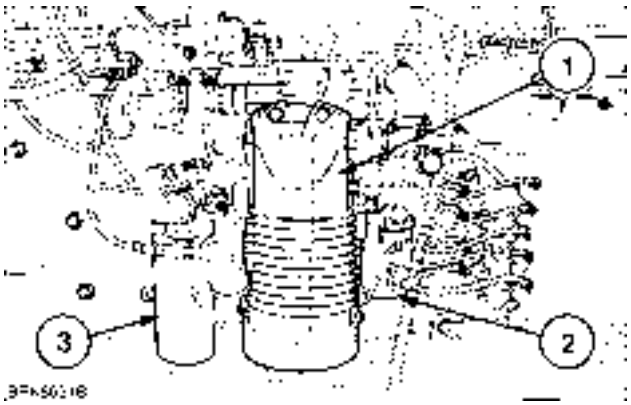

BAIL08CVT008ASA 3

The priority valve **(1)** located on the top of the main pump diverts high pressure oil to the steering, the trailer brake valve (where fitted) **(2)** and high pressure circuit. (Refer to **Priority valve - Dynamic description (A.14.A)**)

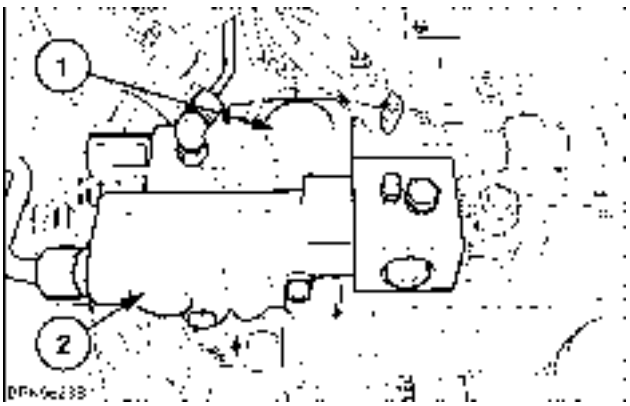

BAIL08CVT007ASA 4

https://tractormanualz.com/

High pressure circuit

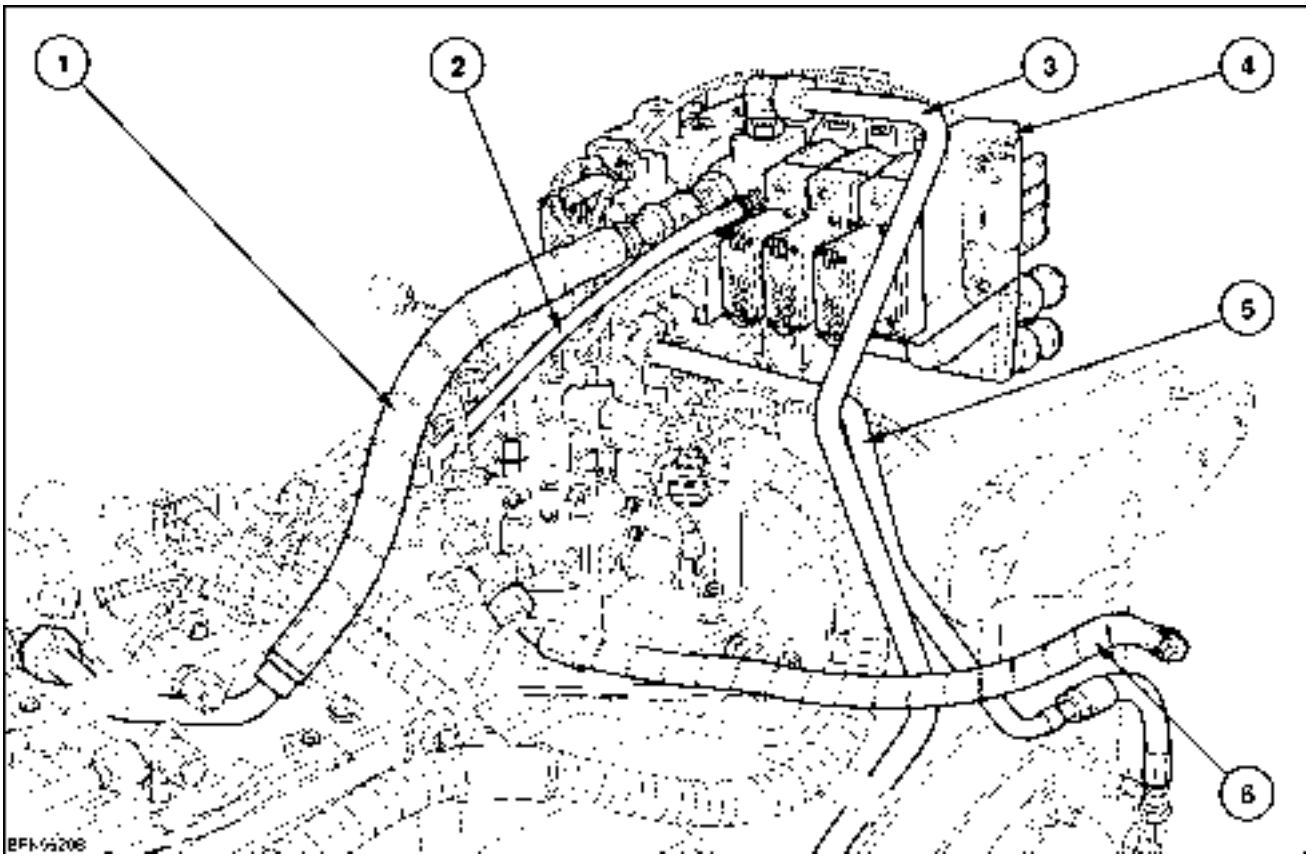

BAIL08CVT005FSA 5

1. Pump feed to electro-hydraulic remotes and electronic draft control
2. Load sensing line
3. Return pipe
4. Remote valve
5. Feed to lift cylinders

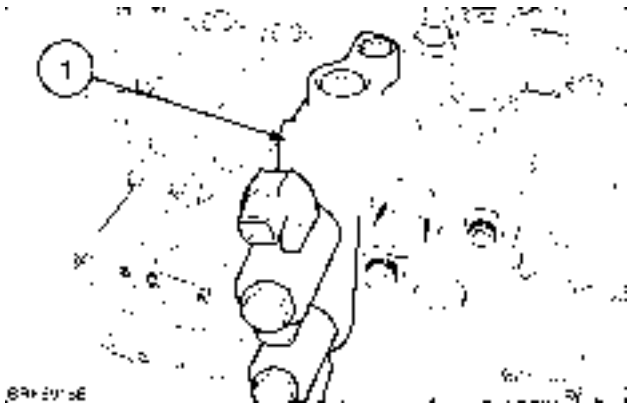

BAIL08CVT084ASA 6

Electronic draft control valve (1)

https://tractormanualz.com/

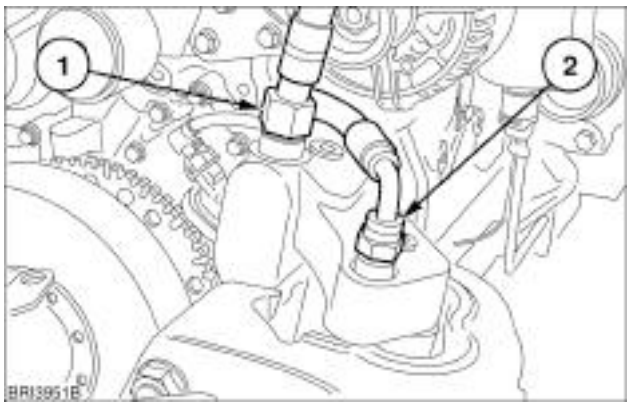

BAIL06CCM037ASA 7

Suspension (where fitted)

Trailer brake valve

The trailer brake valve **(2)** is located above the hydraulic pump and is connected directly to the priority valve **(1)**.

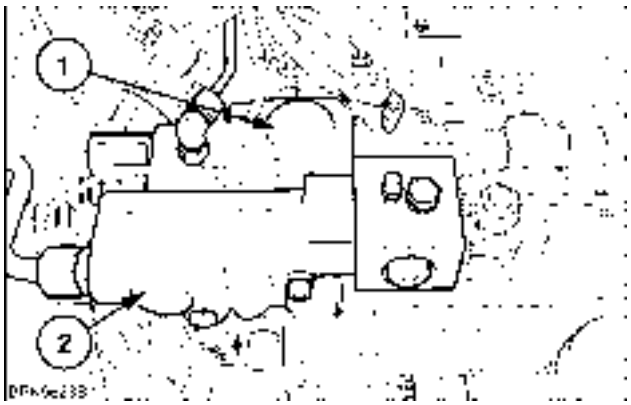

BAIL08CVT007ASA 8

https://tractormanualz.com/

PRIMARY HYDRAULIC POWER SYSTEM - Static description Pressure testing

⚠ WARNING ⚠

Hydraulic oil or diesel fuel leaking under pressure can penetrate the skin and cause infection or other injury. To Prevent Personal Injury: Relieve all pressure, before disconnecting fluid lines or performing work on the hydraulic system. Before applying pressure, make sure all connections are tight and components are in good condition. Never use your hand to check for suspected leaks under pressure. Use a piece of cardboard or wood for this purpose. If injured by leaking fluid, see your doctor immediately.

M149C

⚠ WARNING ⚠

Before carrying out any servicing or repairs on tractors equipped with Independent Front Suspension make sure the keyswitch is in the OFF position, the suspension ON/OFF switch is in the OFF position and the axle is fully lowered to the bottom mechanical stop. Failure to do this may result in serious injury.

M753

To determine if the hydraulic system and the various hydraulic components are working correctly several tests are required. These can be separated into pressure tests and flow tests. The tools required for these tests are listed in **PRIMARY HYDRAULIC POWER SYSTEM - Special tools (A.10.A)** and have been specifically developed for use with these tractors.

Specifications for the hydraulic components can be found in the relevant Chapters :
Hydraulic pump Variable displacement pump - General specification (A.10.A)
Hydraulic pump - General specification (A.12.A)
Priority valve - General specification (A.14.A)
TRANSMISSION Continuously Variable Transmission (CVT) - General specification (C.20.G)
Hydrostat - General specification (C.20.G)

IMPORTANT: *Before performing any pressure or flow testing operate the tractor until the oil in the rear axle is at normal operating temperature.* ***65 °C*** *(* ***145 °F****).*

https://tractormanualz.com/

Tests

Type of test	Range	Tool or gauge required	Accuracy	Purpose
Pressure test	See location table : **2**			
(a) High pressure test	**200 - 250 bar** (**2900 - 3625 psi**)	**300 - 400 bar** (**4350 - 5800 psi**)	**4 %**	Full high pressure system test
(b) Reduced high pressure test	**135 - 200 bar** (**1958 - 2900 psi**)	**150 bar** (**2175 psi**) **250 bar** (**3625 psi**) **300 bar** (**4350 psi**)	**4 %**	Reduced high pressure system test
(c) Low pressure test	**20 - 30 bar** (**290 - 435 psi**)	**30 bar** (**435 psi**) **40 bar** (**580 psi**)	**8 %**	Low pressure standby is the system pressure maintained by the pump when high pressure hydraulic components are not being operated.
(d) Lubrication or charge test	**4 - 20 bar** (**58 - 290 psi**)	**20 bar** (**290 psi**) **30 bar** (**435 psi**)	**8 %**	This test determines if the charge pressure filter dump valve or the charge pressure valve are operating correctly, or whether the charge pump components are worn or damaged.
Flow tests				
(e) High pressure flow test	**0 - 200 l/min** (**0 - 53 US gpm**)	1 x **200 l/min** or 2 x **100 l/min @ 200 bar**		High pressure pump and circuits flow
(f) Low pressure flow test	**0 - 270 l/min** (**0 - 71 US gpm**)	1 x **300 l/min** or 2 x **150 l/min @ 30 bar**		Low pressure, charge pump and circuits flow
(g) Efficiency test	**0 - 270 l/min** (**0 - 71 US gpm**)	1 x **300 l/min** or 2 x **150 l/min @ 30 bar** or **200 bar**		Output comparison at increased pressures

Table 1

https://tractormanualz.com/

Locations

Location	Type of test See table: 1	Tools required	Purpose
(1)	**(d)**	**380200015 380000545 380000543 380001145**	Check output of charge pump (Charge and lubrication)
	(f)	Flowmeter	
(2)	**(d)**	380200006, **380001145 380000543 380000545**	Cooler by pass test
	(f)	Flowmeter	Cooler/charge flow
	(g)	Flowmeter	
(3)	**(d)**		Check output of charge pump
(4)	**(b)**	**380000492 380000545 380000543**	Check steering circuit pressure
	(a)		Check shock valve circuit
(5)	**(d)**	See **(1)**	Check output of charge pump
(6)	**(d)**		Check lubrication pressure
(7)	**(a)**		Check high pressure output
(8a)	**(a)**		Check High pressure output from priority valve
(8b)	**(a)**		Check high pressure output to suspension
(8c)	**(a)**		Check high pressure output to remote valve assembly
(9a)	**(b)**	**380000550 380000552**	Check universal trailer brake valve
(9b)	**(b)**		Check Italian trailer brake valve
(10)	**(a)**		Check suspension (where fitted). *See warning message.
(11)	**(a)**		Check Mid mount valve output
(12)	**(a)**	380000553, **380000492 380000543 380000545**	Rear remote output (high pressure standby)
	(c)	380000554, 380000576, **380000552 380000492 380000543 380000545**	Low pressure standby
	(e)	**200 l/min** flowmeter	Check volume flow of variable displacement pump
(13)	**(a)**		Check Electronic draft control valve
(14)	**(a)**	380000577, **380000552 380000492 380000543 380000545**	Check low pressure output
	(f)	Flowmeter	Check volume flow of variable displacement pump
(15)	**(c)**		Check low pressure relief valve
(16)	**(c)**		Check low pressure flow

https://tractormanualz.com/

Location	Type of test See table: 1	Tools required	Purpose
(17)	**(a)**		Check low pressure output
(18)	**(a)**		Check low pressure output (low pressure warning switch)
(19)	**(c)**	**380000492 380000552 380000543 380000545**	Check PTO brake lubrication
(20)	**(c)**	See **(19)**	Check PTO lubrication
(21)	**(c)**	See **(19)**	Check differential lock lubrication
(22)	**(c)**	See **(19)**	Check front wheel drive supply
(23)	**(c)**		Check pressure to synchronisers
(24)	**(c)**		Check supply to A/B clutch
(25)	**(c)**	380000577, **380000492 380000552 380000543 380000545**	Check brake boost pressure

Table 2

https://tractormanualz.com/

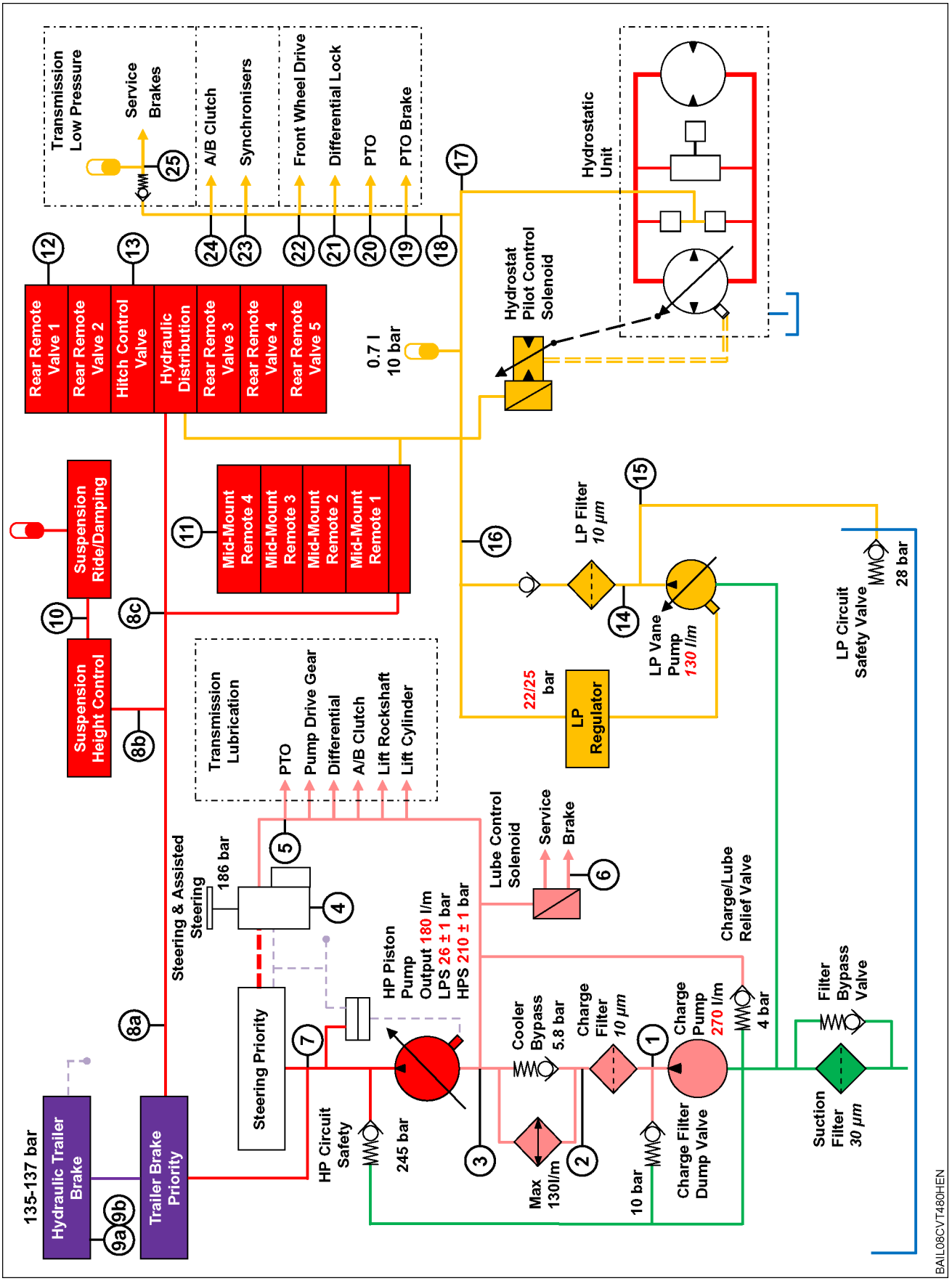

BAIL08CVT480HEN 1

NOTE: *Other tests may be carried out at the positions indicated. The tests listed are normal at the locations shown*

https://tractormanualz.com/

Relief valve - Static description Air bleed relief valve

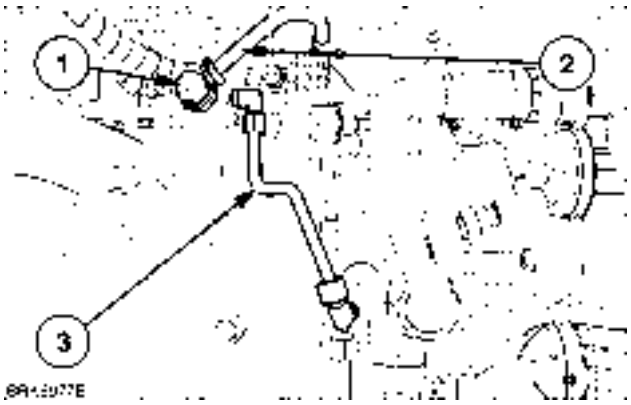

BAIL08CVT144ASA 1

To reduce air ingress an air bleed relief valve is used in the charge pump hydraulic circuit. Oil at charge pump pressure is drawn up to the valve through pipe **(3)**. The valve **(1)** directs excess oil back to sump by a tube and pipe assembly **(2)** on the top of the transmission housing. The valve has an internal piston and spring assembly . When normal charge pressure is supplied the piston is forced against spring pressure. An orifice at the side of the piston allows any air to leak to the inside of the piston and out through to hose **(2)**. The excess air is vented back into the top of the transmission housing.

https://tractormanualz.com/

Hydraulic pump Variable displacement pump - Dynamic description

The operating principal of a variable flow piston pump is to provide oil flow on demand and minimise the engine power absorbed in driving the hydraulic pump when the hydraulic circuits do not require maximum pump flow. The variable flow piston pump in hydraulic systems therefore has distinct power loss advantages over fixed displacement gear type pumps, which continually provide oil flow and absorb engine power even when the hydraulic circuits do not require the total pump output.

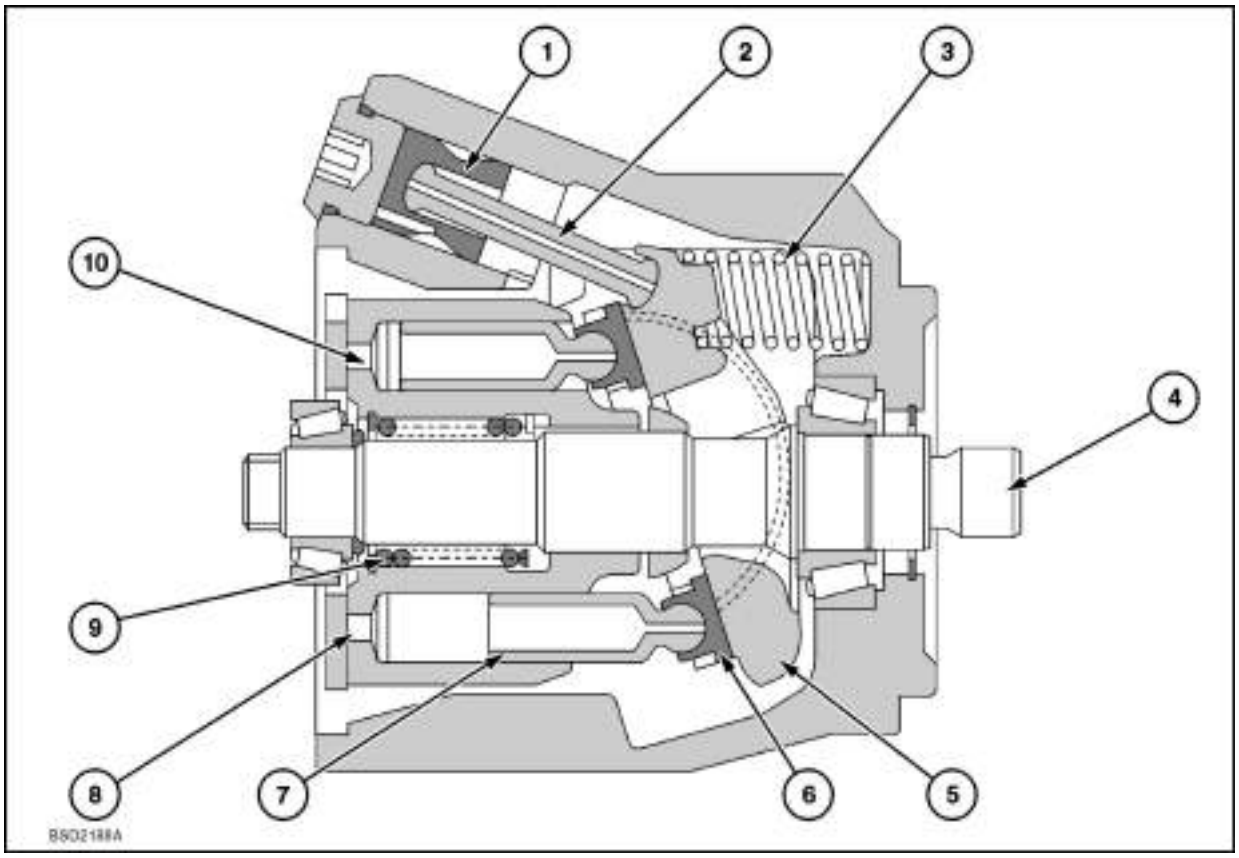

bsd2188A 1

1.Stroke Control Piston
2.Rod
3.Swash Plate Return Spring
4.Driveshaft
5.Swash Plate
6.Slipper (Quantity 9)
7.Piston and Barrel (Quantity 9)
8.Inlet Port
9.Shaft Pre-Load Spring
10.Outlet Port

The major components of the variable flow piston pump with closed centre load sensing are :-

- A nine element pumping head.
- A plate mechanism (swash plate) to adjust piston stroke and corresponding pump output.
- A load sensing valve which monitors the requirements of the hydraulic circuits and signals the pump to increase or decrease hydraulic oil flow accordingly.

https://tractormanualz.com/

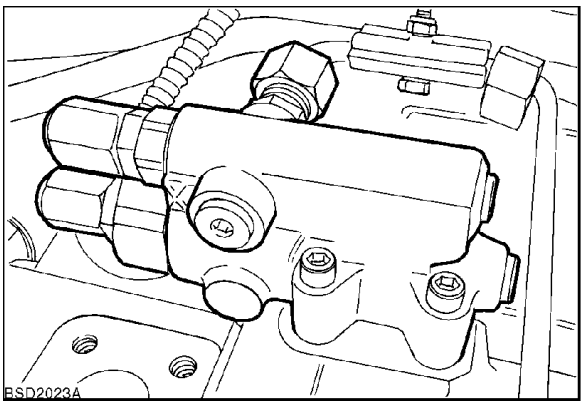

BSD2023A 2

The nine element pumping head is cylindrical in shape and has nine barrels, into each of which, is installed a piston **(7)**. On the end of each piston is pressed a slipper **(6)** which always remains in contact with the face of the swash plate **(5)** located at the front of the pumping head.

The drive shaft **(4)**, which is driven by the pump drive gear, rotates the pumping head. As the pumping head rotates, the pistons move in and out of their barrels, following the contour of the swash plate. For every revolution of the drive shaft each piston completes one pumping cycle.

The swash plate, which does not rotate but pivots about the front of the pumping head, is the control mechanism that limits the stroke of each piston and works in conjunction with the pressure and flow compensating valves in the load sensing line.

As the pumping head rotates each barrel passes over the inlet **(8)** and then the outlet ports **(10)** of the pump. During the inlet cycle for each piston and barrel, oil is pumped into the barrel pushing the piston forward so that it always remains in contact with the swash plate. The stroke of each piston and volume of oil charged into its barrel is therefore dependent on the angle of the swash plate.

After a piston and barrel has completed the inlet stroke, further rotation of the head aligns the barrel with the outlet port. **(10)** Oil within the barrel is then forcibly ejected by the piston through the exhaust port to the hydraulic circuits.

https://tractormanualz.com/

Hydraulic pump Variable displacement pump - Static description

The variable flow closed centre load sensing hydraulic pump assembly is mounted on the right hand side of the rear axle centre housing and contains within its body two hydraulic pumps See Figure **1**.

- A charge pump of the gear type to supply oil at a charge pressure of **10 bar** (**145.0 psi**) to a variable flow closed centre load sensing hydraulic piston pump.
- A variable flow closed centre load sensing piston type hydraulic pump supplying oil to the high pressure circuits for operation of:-
  Trailer Brake (Where fitted)
  Hydraulic Lift Assembly
  Remote Control Valves
  Front Axle Suspension (Where fitted)
  Front Lift (Where fitted)
  Mid Mount remote valves (Where fitted)

Principal of Operation

Both pumping elements are driven by a 'live' drive gear train directly connected to the PTO clutch input drive shaft and driven by the engine flywheel.
The operating principal of the fixed displacement gear pump is to provide a constant oil flow directly related to the rotation speed of the pump.
The operating principal of a variable flow piston pump is to provide oil flow on demand and minimises the engine power absorbed in driving the hydraulic pump when the hydraulic circuits do not require maximum pump flow.
The variable flow piston pump in hydraulic systems therefore has distinct power loss advantages over fixed displacement gear type pumps, which continually provide oil flow and absorb engine power even when the hydraulic circuits do not require the total pump output.

Variable Displacement Piston Pump (Refer to **Hydraulic pump Variable displacement pump - Sectional view (A.10.A)**)
The major components of the variable flow piston pump with closed centre load sensing are:-

- A nine element pumping head.
- A plate mechanism (swash plate) to adjust piston stroke and corresponding pump output.
- A load sensing valve which monitors the requirements of the hydraulic circuits and signals the pump to increase or decrease hydraulic oil flow accordingly.

Refer to **Hydraulic pump Variable displacement pump - Dynamic description (A.10.A)** for pump functional description.

https://tractormanualz.com/

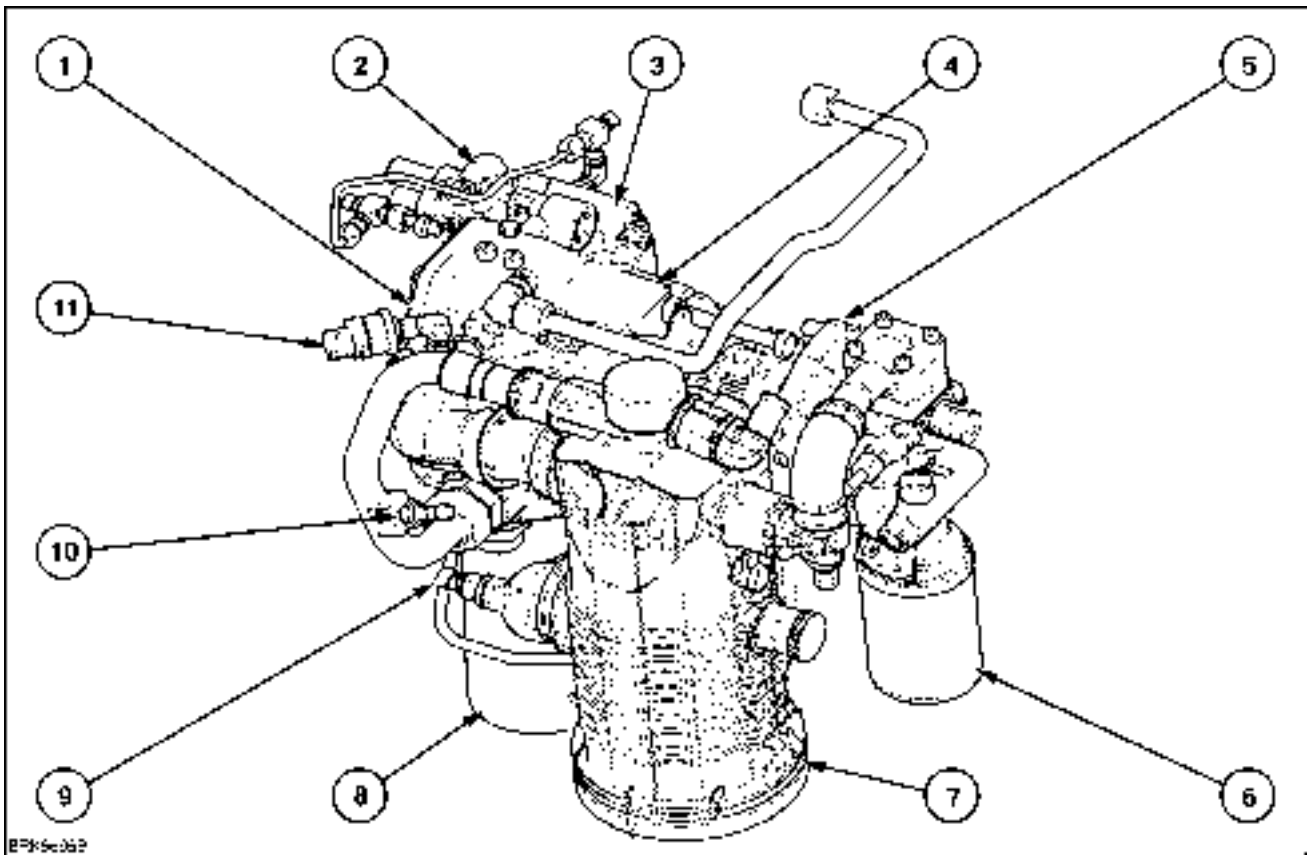

BAIL08CVT026FSA 1

Hydraulic pump and related components

1. Charge pump
2. Priority valve
3. Pressure and flow compensating valve
4. Variable displacement hydraulic pump
5. Vane pump
6. Vane pump filter
7. Suction filter assembly
8. Charge pump filter
9. Low oil temperature switch
10. Low charge pressure switch
11. Filter restriction switch

The location of the principal components in the hydraulic pump assembly are identified above. These items are shown on the hydraulic circuit diagram. (Refer to **PRIMARY HYDRAULIC POWER SYSTEM - Hydraulic schema (A.10.A)**). The principal function of the components are as follows:-

(1) Charge Pump

The charge pump (Refer to **Charge pump - Exploded view (A.10.A)** supplies oil at a charge pressure of **10 bar** (**145.0 psi**) to the variable flow closed centre load sensing pump.

(2) Priority valve

The priority valve is located on the top of the variable displacement pump and contains two valves. One ensures priority oil to the trailer brake system and the other controls priority of oil to the steering system. Once these systems are satisfied with the correct amount of oil, the high pressure system oil to the hydraulic power lift and remote control valves are supplied.

(3) Flow and Pressure Compensating Valves (Refer to **Compensator - Exploded view (A.10.A)**). These valves monitor the requirements of the hydraulic circuits and signal the pump to increase or decrease flow accordingly.

(4) Variable Displacement Piston Pump (Refer to **Hydraulic pump Variable displacement pump - Dynamic description (A.10.A)**)
The variable flow piston pump with closed centre load sensing provides oil flow on demand.

(5) Vane Pump

https://tractormanualz.com/

This pump provides system oil pressure at **22 - 25 bar** (**319.0 - 362.5 psi**) for PWM's and oil for the CVT hydrostatic motor.

(6), **(7)**, and **(8)** Hydraulic filters .

These filters provide effective filtration for the hydraulic circuit. There is an audible warning and visual alarm if the filters become partially blocked.

(9) Low oil temperature switch

Because oil is more viscous (thicker) when cold and can falsely indicate that the filter requires servicing a low temperature oil switch is also used in the filter restriction circuit. This switch ensures that the warning light will not operate if the oil temperature is less than **40 °C**.

(10) Low charge pressure switch

The low charge pressure switch will cause a light to 'Flash' on the instrument cluster whenever the charge pressure is less than **0.75 bar** (**11 lbf/in2**)

(11) Intake Filter and Restriction Switch

Oil for both the charge and steering pump is drawn from the rear axle centre housing via the intake filter **(8)**. The filter incorporates a by-pass valve, which is an integral part of the replaceable filter and it is therefore essential that the correct filter is installed at every filter change.
When the filter is blocked the oil filter restriction vacuum switch **(11)** is activated and illuminates the oil filter restriction warning light on the instrument panel.

Charge Pressure Filter Dump Valve **Charge pump - Exploded view (A.10.A)**)

The charge pressure filter dump valve is a safety relief valve for relieving excess pressure on the charge pump should the filter be restricted. This valve will start to operate if the charge pressure exceeds **10 bar** (**145.0 psi**)).
Charge Pressure Bypass Valve
The charge pressure bypass valve diverts excess oil supplied by the charge pump and not required by the variable flow piston pump to vane pump.
This valve when fully open limits the charge pressure circuit oil to **4 bar** (**58.0 psi**)) .

Output from the variable flow piston pump is determined by adjusting the angle of the swash plate in the pump. The flow compensating valve senses the circuit operating pressure and adjusts the swash plate angle to control pump output.
If pump output and circuit pressure rises to **210 bar** (**3045.00 psi**) the pressure compensating valve overrides the flow compensating valve and adjusts the swash plate angle to limit maximum system pressure.

https://tractormanualz.com/

Hydraulic pump Variable displacement pump - Sectional view

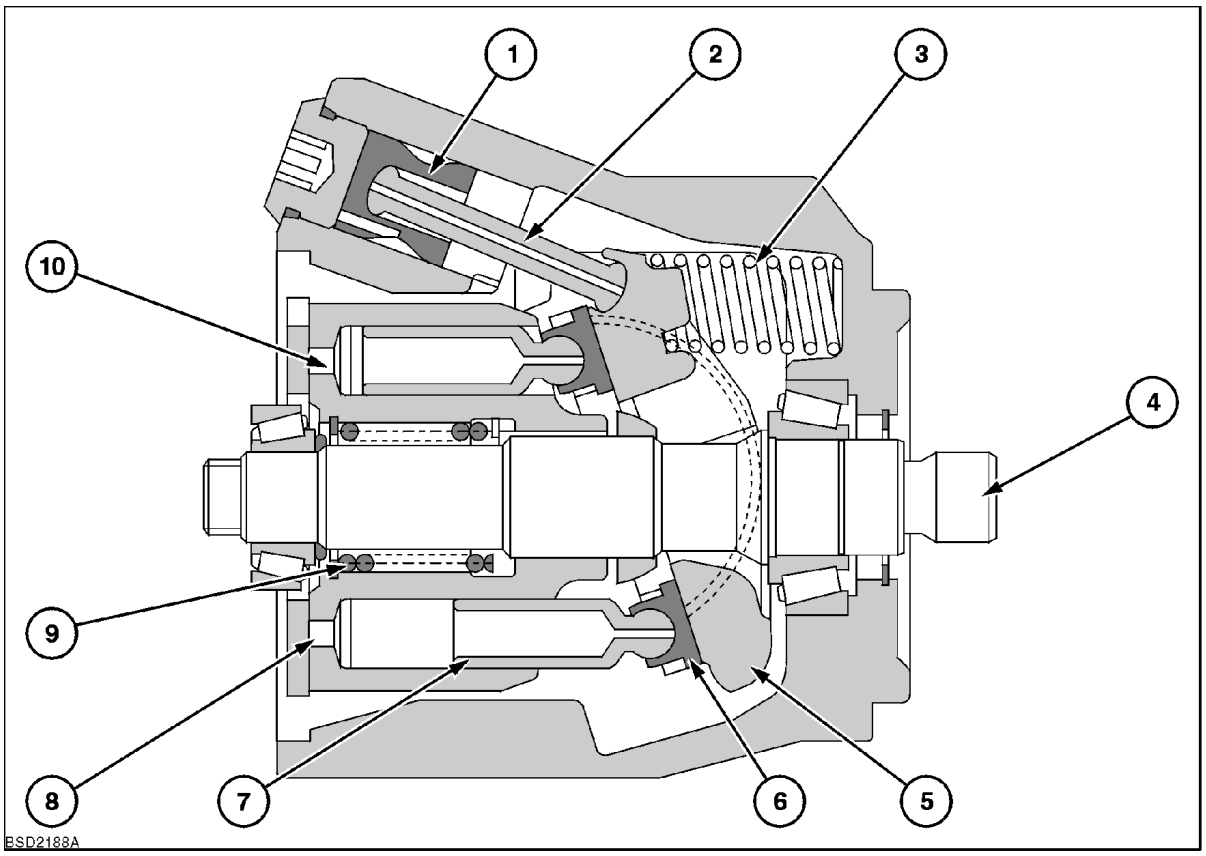

BSD2188A 1

Variable Displacement Piston Pump-Sectional Drawing

1 Stroke control piston
2 Rod
3 Swash plate return spring
4 Driveshaft
5 Swash plate
6 Slipper (Quantity 9)
7 Piston and barrel (Quantity 9)
8 Inlet port
9 Shaft pre-load spring
10 Outlet port

https://tractormanualz.com/

Charge pump - Exploded view

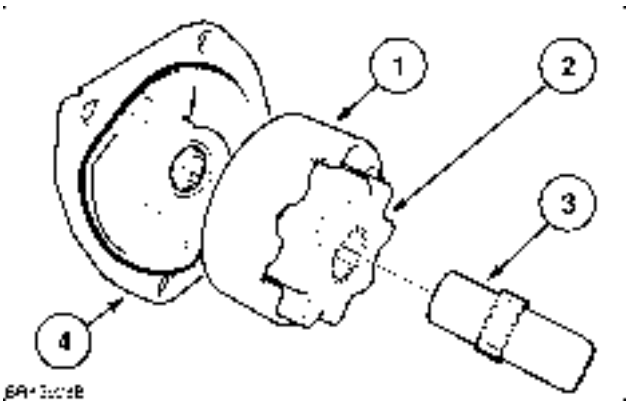

BAIL08CVT102ASA 1

1 Rotor housing
2 Rotor
3 Rotor shaft
4 End plate

https://tractormanualz.com/

Compensator - Exploded view

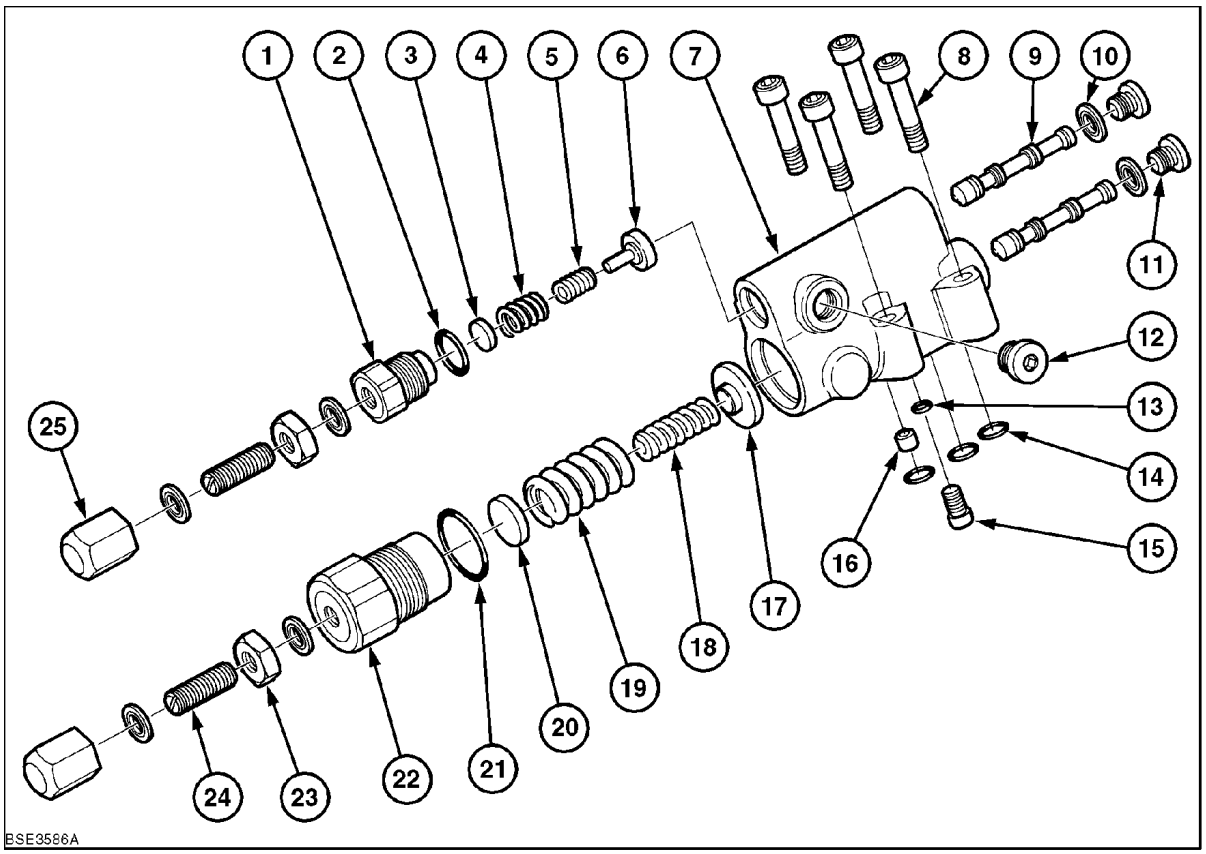

BSE3586A_454 1

Flow and Pressure Compensating Valves

1 Plug
2 Seal
3 Disc
4 Spring
5 Spring
6 Seat
7 Housing
8 Screw
9 Spool
10 Snap-ring
11 Plug
12 Plug
13 Seal
14 Seal
15 Damper Screw
16 Nozzle
17 Seat
18 Spring
19 Spring
20 Disc
21 Seal
22 Plug
23 Nut
24 Screw
25 Locknut

https://tractormanualz.com/

https://tractormanualz.com/

Hydraulic line - Overview

System pressure @ **210 bar** (**3045.00 psi**).

Load sensing pressure .

Lubrication and charge pressure

Suction

Return to reservoir

Trapped oil

Low Pressure @ **22 - 25 bar** (**319.0 - 362.5 psi**).

Lubrication Oil

https://tractormanualz.com/

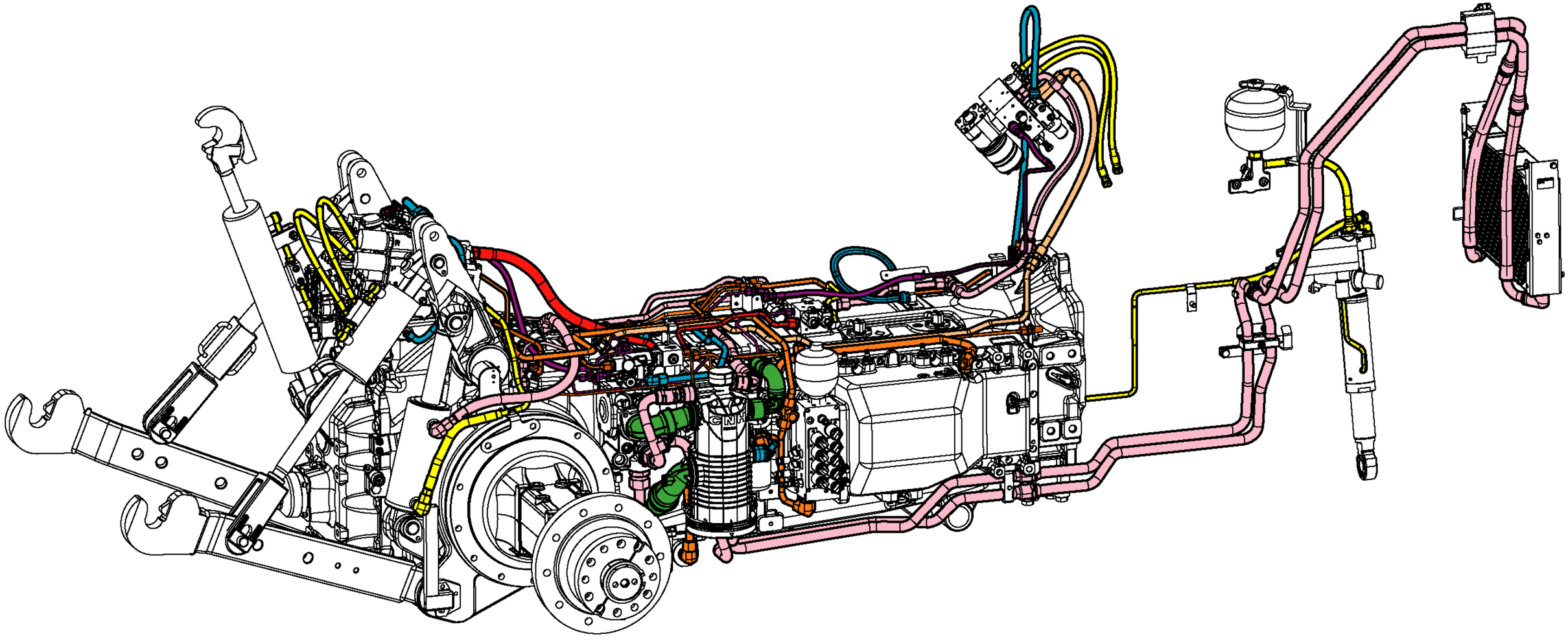

BAIL08CVT136FF 1

https://tractormanualz.com/

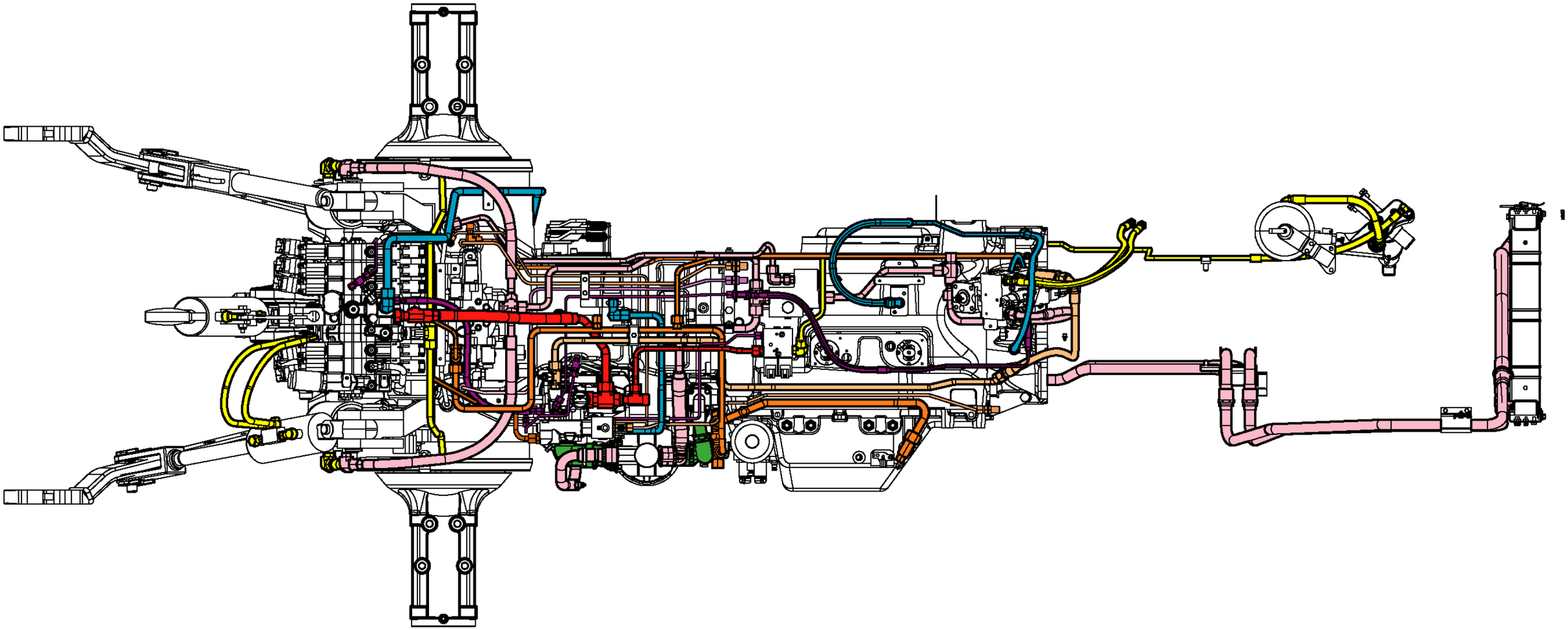

BAIL08CVT137FFA 2

https://tractormanualz.com/

Power beyond - Remove

1. Remove pneumatic trailer brake valve bracket (Where fitted). Undo the three retaining nuts **(1)**.

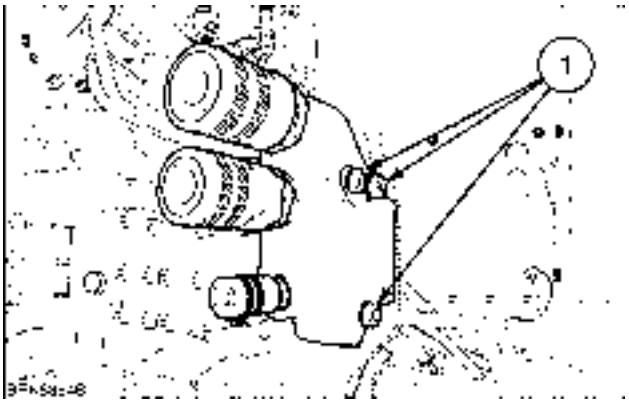

BAIL08CVT065ASA 1

2. Remove the power beyond slice from the tie rods.

NOTE: *Ensure O-rings are not dislodged from the power beyond slice on removal.*

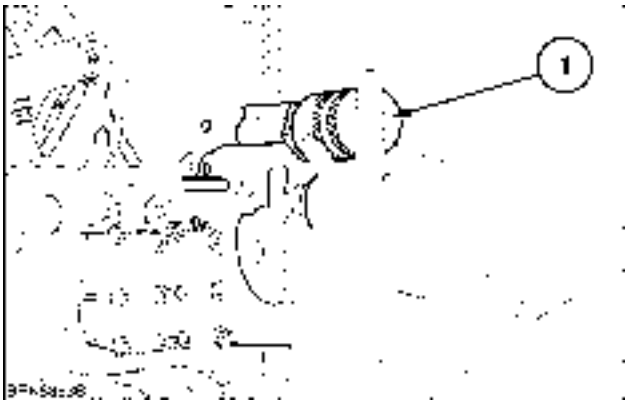

BAIL08CVT066ASA 2

https://tractormanualz.com/

Power beyond - Install

1. Install the power beyond slice on the three tie rods. Ensure the O-rings are not dislodged during installation.

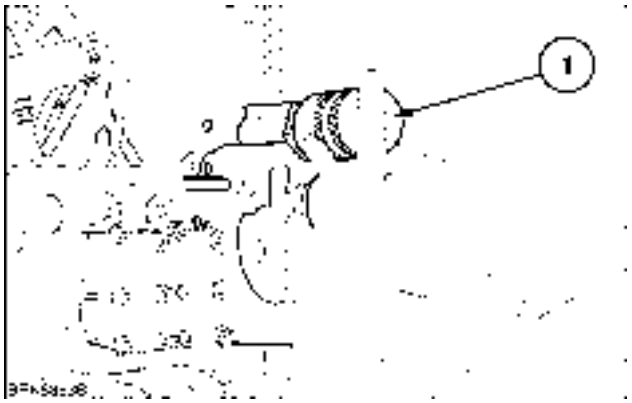

BAIL08CVT066ASA 1

2. Install the three retaining nuts and tighten to **45 Nm** (**33.2 lb ft**).

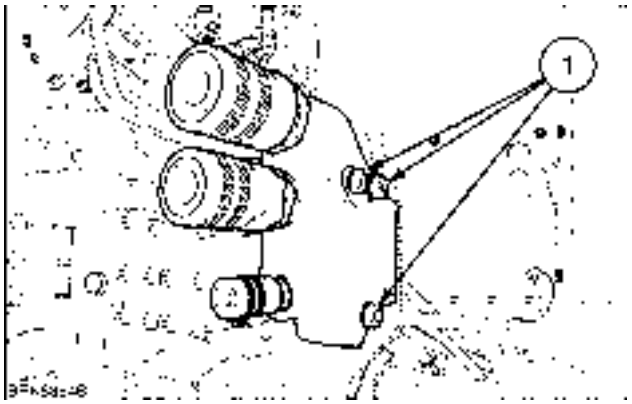

BAIL08CVT065ASA 2

https://tractormanualz.com/

Hydraulic pump Variable displacement pump - Remove

Prior operation:
Battery - Disconnect (A.30.A)

1. Raise the rear of the tractor and place two suitable axle stands **(1)** under the final drive cases.

NOTE: *If required, detach the lift rods from the lower links.*

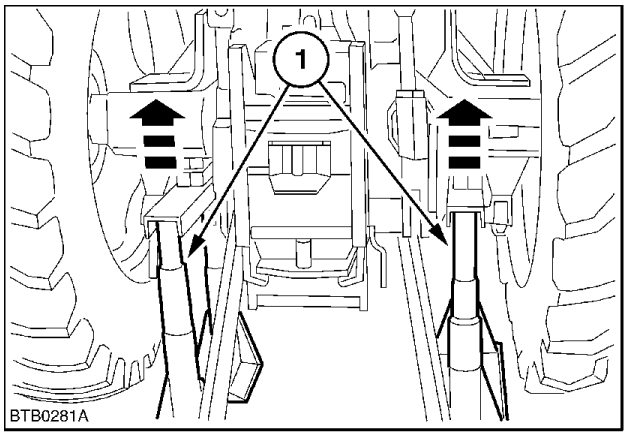

BTB0281A 1

2. Using a suitable sling **(1)** and hoist, or wheel removal tool, remove the rear right-hand wheel.

⚠ WARNING ⚠

Tractor wheels are very heavy. Handle with care and ensure, when stored, that they cannot fall and cause injury. Never operate the tractor with a loose wheel rim or disc. Always tighten nuts to the specified torque and at the recommended intervals.

B105

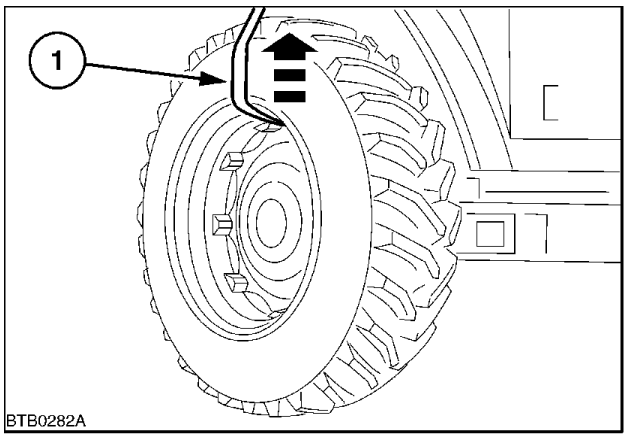

BTB0282A 2

3. Disconnect the main filter fittings and remove the hydraulic oil filter

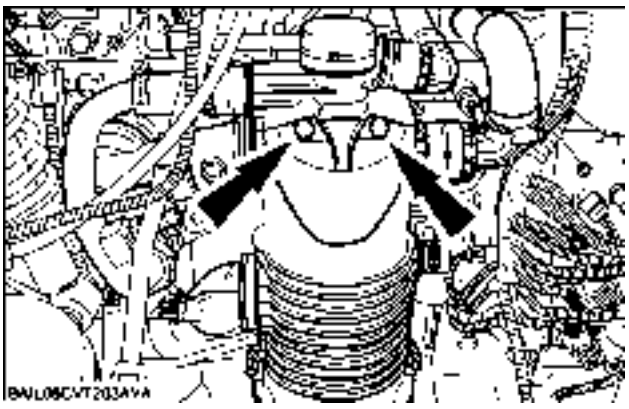

BAIL08CVT263AVA 3

NOTE: *Loosen the oil filter vent cap and leave for one minute to allow oil in the filters to drain into the sump.*

https://tractormanualz.com/

4. Disconnect the load sensing line **(1)**, steering supply pipe **(2)**, high pressure supply pipe **(3)** , load sensing line, **(4)** and trailer brake coupler pipe **(5)**.

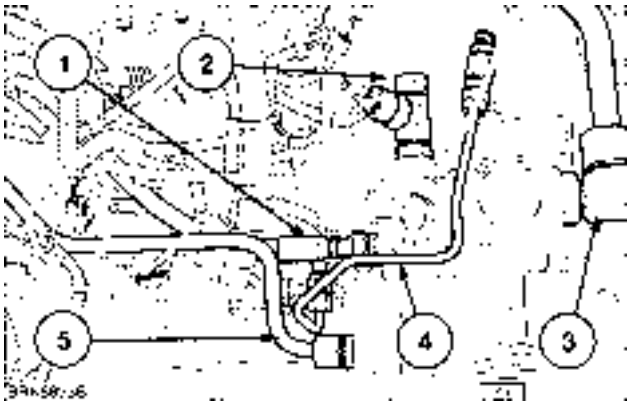

BAIL08CVT071ASA 4

5. Disconnect the brake pipes **(1)** and the trailer brake valve drain pipe **(2)**. If required remove trailer brake valve (where fitted).

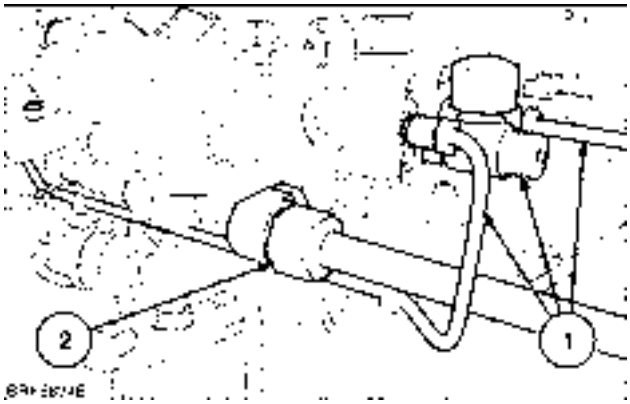

BAIL08CVT072ASA 5

6. Undo and remove priority valve retaining bolts **(1)** and **(2)** and remove the priority valve assembly.

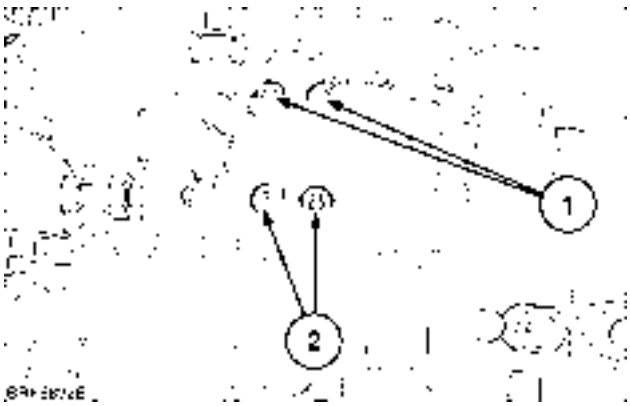

BAIL08CVT073ASA 6

7. Using a suitable hoist and sling **(1)** support the pump.

BAIL08CVT074ASA 7

https://tractormanualz.com/

8. Undo and remove the pump retaining nut and bolt **(1)** and remove the pump from the rear axle housing.

⚠ WARNING ⚠

Lift and handle all heavy components using lifting equipment of appropriate lifting capacity. Make sure that units or parts are supported by suitable slings or hooks. Make sure that no-one is in the vicinity of the load to be lifted. Failure to comply could result in serious injury or death.

B012

BAIL08CVT075ASA 8

https://tractormanualz.com/

Hydraulic pump Variable displacement pump - Overhaul

This procedure describes the overhaul of the Load Sensed Variable Displacement pump assembly when removed from the tractor. The following items however can be serviced with the pump installed on the tractor.
Blocked filter dump valve
Pressure and flow compensating valves
Steering flow control valve (Priority valve)
Steering pump assembly

1. Remove the pump. (Refer to **Hydraulic pump Variable displacement pump - Remove (A.10.A)**)

BAIL08CVT075ASA 1

2. Remove pressure and flow compensating valves assembly. Refer to **Compensator - Overhaul (A.10.A)**

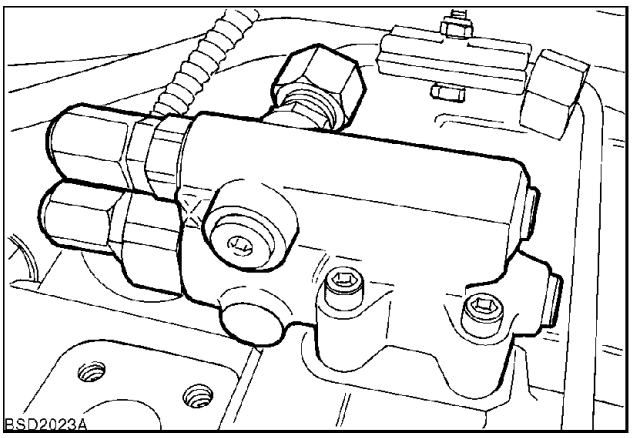

BSD2023A 2

3. Undo the 4 retaining bolts **(1)** and remove the end plate. Remove circlip from opposite end of pump.

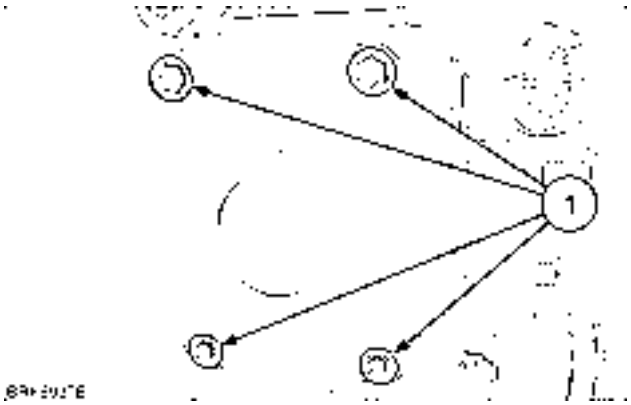

BAIL08101ASA 3

https://tractormanualz.com/

4. Remove the charge pump components from main pump assembly.
   (1) Rotor housing
   (2) Rotor
   (3) Rotor shaft
   (4) End plate

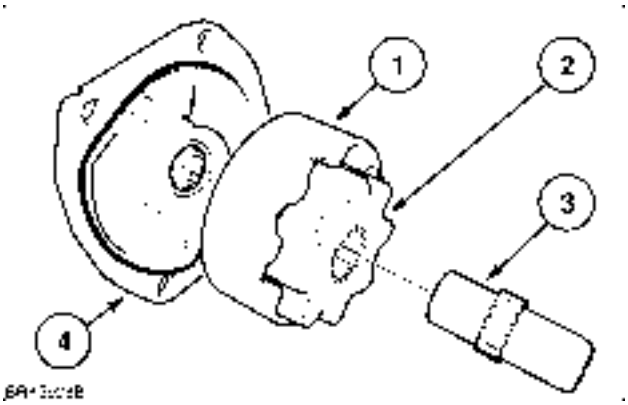

BAIL08CVT102ASA 4

5. When replacing the input shaft seal, make sure the pump housings mounting flange is clean. Use circlip pliers to remove the input shaft seal retaining ring.

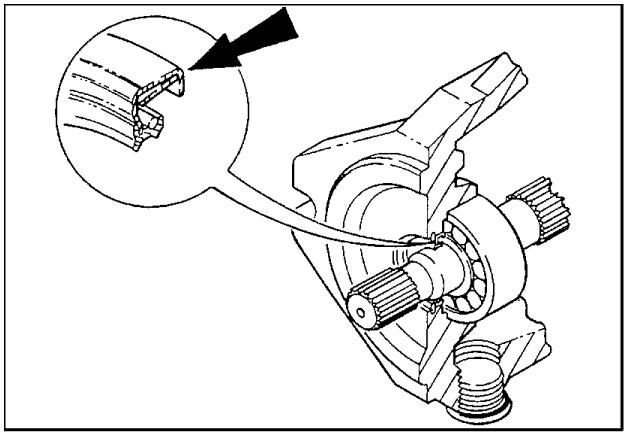

1b0o2004061061 5

6. With the retaining ring removed, use a punch or similar tool, and carefully pierce the top of the lip seal. Using the punch, pry the seal from its bore.

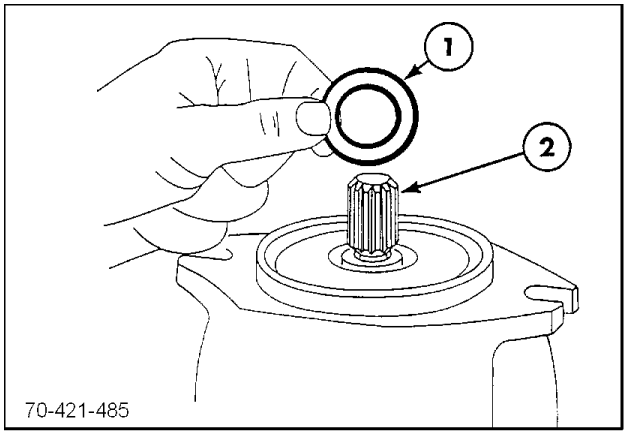

70-421-485 6

7. Examine valve plate **(1)**. Check to see if it is scored, nicked, warped or damaged by cavitation. Look for score marks or damage around the bearing surface area. Check the inlet and discharge port area for signs of contamination. This contamination may show as grooves starting in the feathering notch,

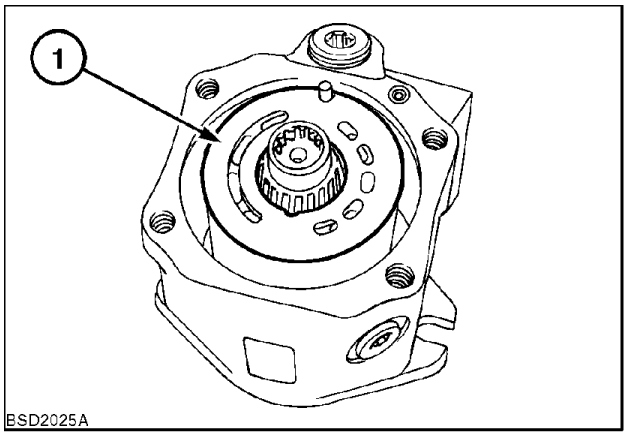

BSD2025A 7

https://tractormanualz.com/

8. Remove bearing cone **(1)** and splined connector.

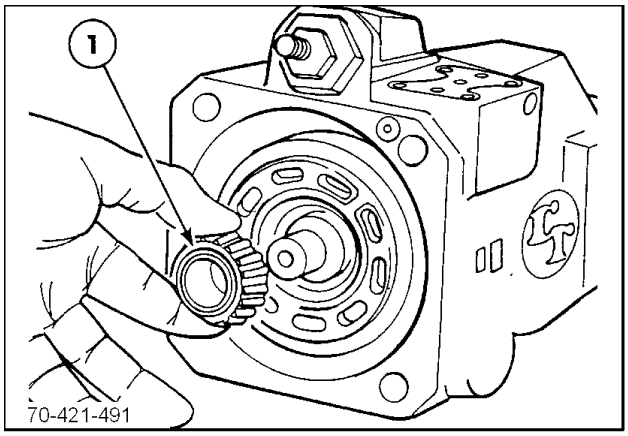

70-421-491 8

9. Remove preload spacer from driveshaft. Remove pumping head and piston from housing. Using a suitable marker identify each piston and slipper to their corresponding barrel in the pumping head.

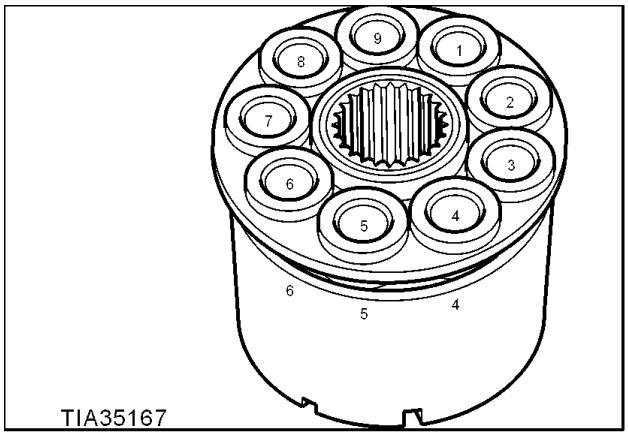

TIA35167 9

10. Separate pumping head and slipper assembly and inspect for damage. Where damage is identified the pumping element must be replaced.
Pumping head and slipper assembly
(1) Pistons and slippers
(2) Cone
(3) Washer
(4) Pumping head
(5) Pins (quantity 3)

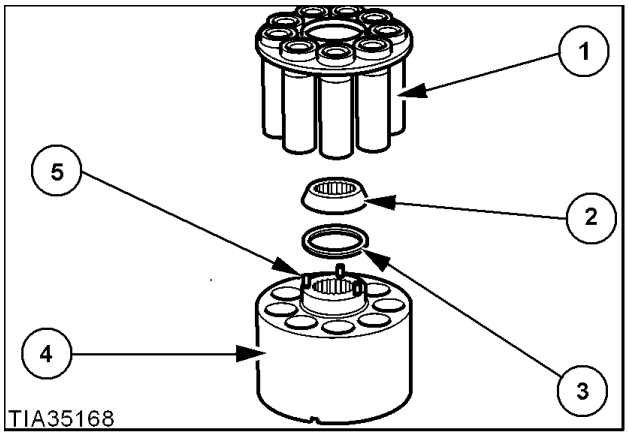

TIA35168 10

11. If necessary disassemble pumping head spring assembly by compressing the retaining ring against the spring.
Pumping head spring assembly
(1) Washer
(2) Retaining ring
(3) Spring
(4) Pumping head

IMPORTANT: *Due to high spring pressure take care when removing retaining ring.*

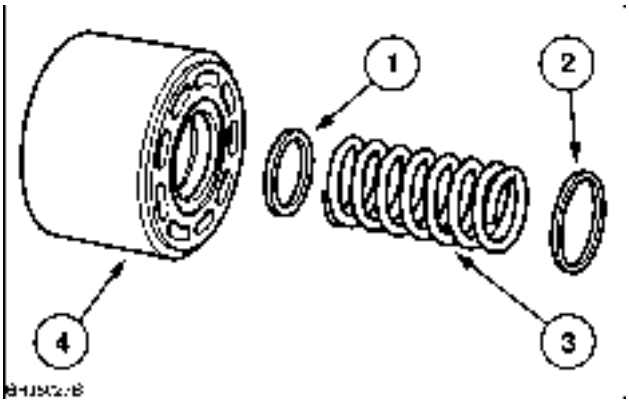

BAIL07APH347ASA 11

https://tractormanualz.com/

12. Remove swash plate **(1)** assembly.
Inspect components for wear and replace if damaged or worn.

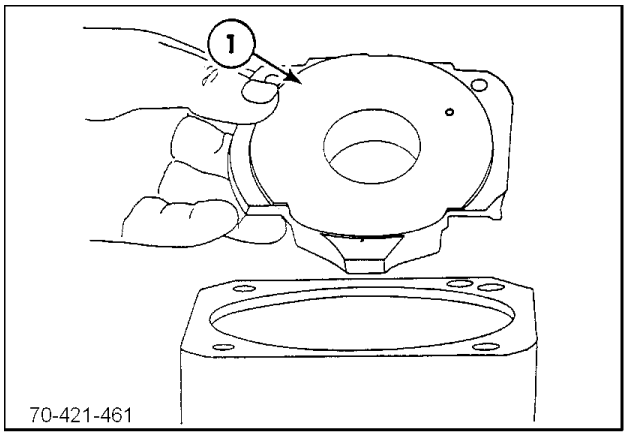

70-421-461 12

https://tractormanualz.com/

Hydraulic pump Variable displacement pump - Install

1. Using a suitable hoist and sling **(1)** support the pump.

BAIL08CVT074ASA 1

⚠ WARNING ⚠

Lift and handle all heavy components using lifting equipment of appropriate lifting capacity. Make sure that units or parts are supported by suitable slings or hooks. Make sure that no-one is in the vicinity of the load to be lifted. Failure to comply could result in serious injury or death.

B012

2. Mate the pump drive shaft into the drive gear. Tighten the retaining nuts to **135 Nm** (**99.6 lb ft**).

BAIL08CVT075ASA 2

3. Install the priority and trailer brake valve assembly on the top of the pump. Tighten the retaining bolts.

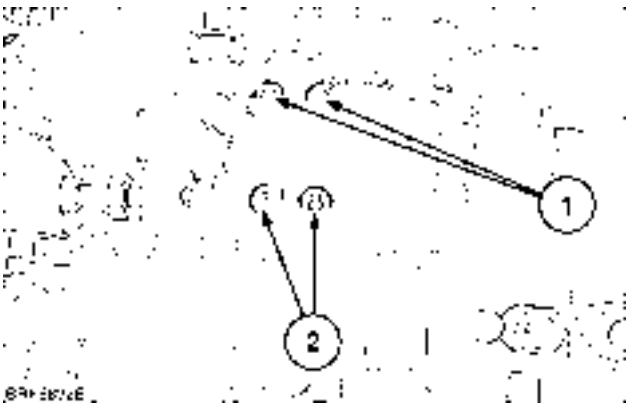

BAIL08CVT073ASA 3

https://tractormanualz.com/

4. Reconnect the brake pipes **(1)** and the trailer brake valve drain pipe **(2)**.

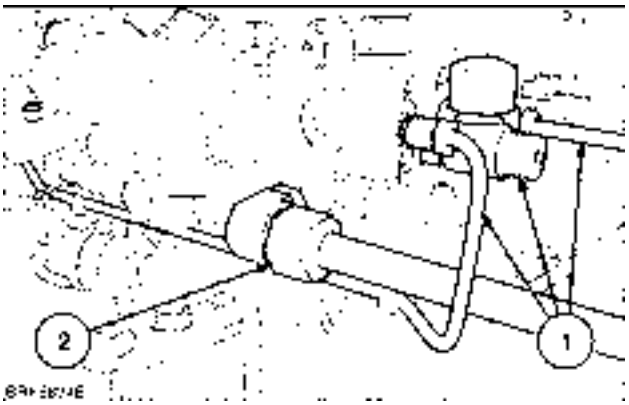

BAIL08CVT072ASA 4

5. Reconnect the load sensing line **(1)**, steering supply pipe **(2)**, high pressure supply pipe **(3)**, load sensing line **(4)**, and trailer brake coupling pipe **(5)**.

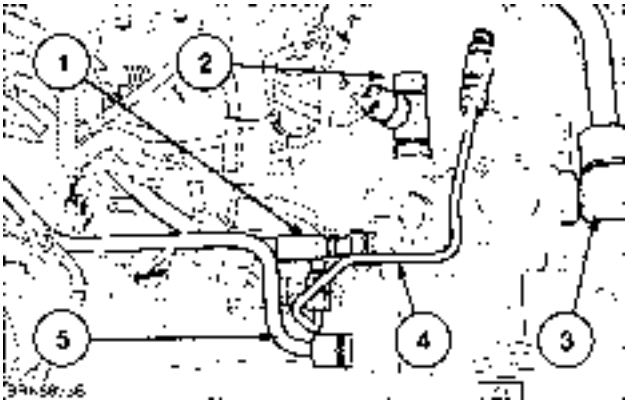

BAIL08CVT071ASA 5

Next operation:
Filter - Install (A.10.A)

https://tractormanualz.com/

Compensator - Overhaul

1. Disconnect load sense line connection and remove pressure and flow compensating valve assembly. Remove the tamper proof caps, carefully unscrew each adjuster and remove the component parts. Refer to **Compensator - Exploded view (A.10.A)** To ensure correct reassembly keep the component parts for each valve separate.

IMPORTANT: *Due to extreme spring pressure within valves DO NOT remove rear plugs until the adjusters have been removed.*

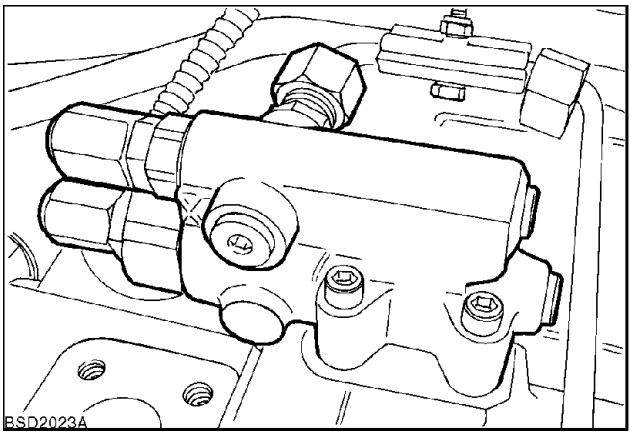

BSD2023A 1

2. Reassembly of the valves follows the removal procedure in reverse. On reassembly observe the following :-
   Wash all components in a suitable solvent.
   Examine all components for wear or damage. If the spools are damaged it is necessary to replace the complete valve assembly.
   Lubricate all parts with clean hydraulic oil.
   To aid reassembly of pressure and flow compensating valves, the spools should be inserted into the rear of the housing.
   Tighten all plugs and locknuts to the correct torque as detailed in Specifications.

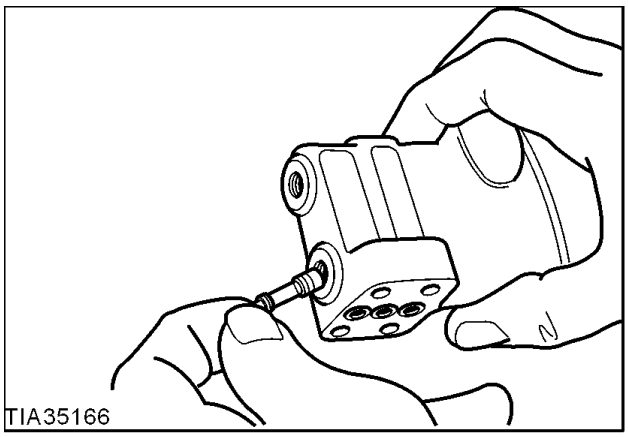

TIA35166 2

3. When installing valve on pump ensure all 'O' ring seals are correctly installed.
   Pressure test the pump and adjust the pressure and flow compensating valves to the correct specification as detailed **Hydraulic pump - Pressure test (A.10.A)**.

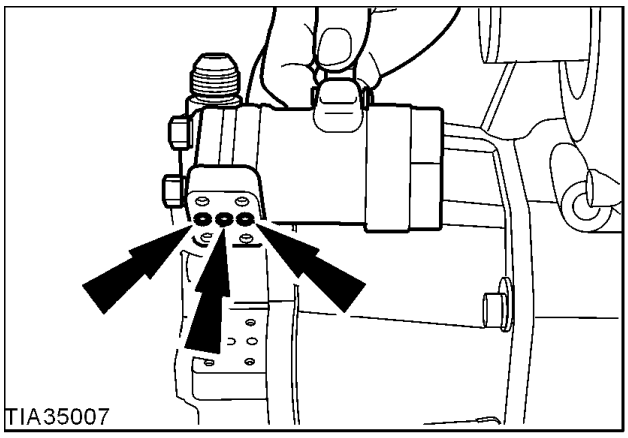

TIA35007 3

https://tractormanualz.com/

NOTE: *If the damper screw* ***(1)*** *is removed for any reason it should be reinstalled in alignment with the three ports and should be fixed into position using a suitable threadlock and seal.product. Failure to adjust this screw correctly could reduce the efficiency of the system.*

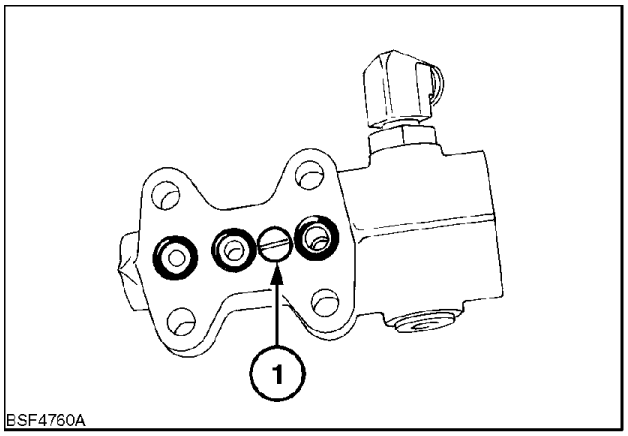

BSF4760A 4

https://tractormanualz.com/

Filter - Remove

1. Loosen the oil filter vent cap and leave for one minute to allow oil in the filter to drain into the sump.

NOTE: *Remove rear wheel to enable full access to filter and pipes.*

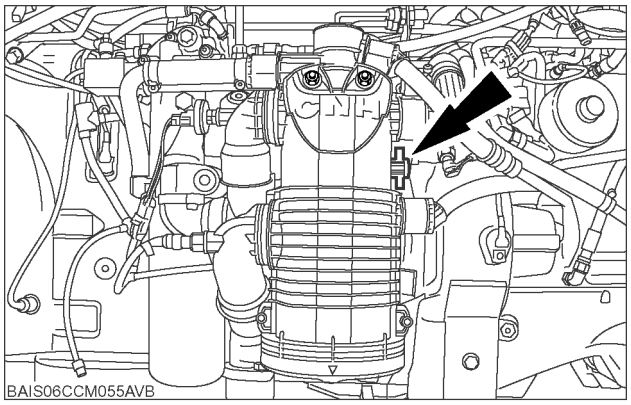

BAIS06CCM055AVB 1

2. Remove the hydraulic oil pump filter housing drain plug.

NOTE: *Place a suitable container under the oil filter housing to collect the hydraulic oil.*

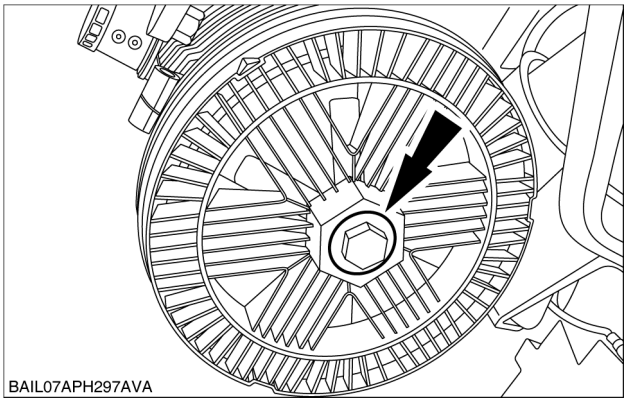

BAIL07APH297AVA 2

3. Disconnect the hydraulic oil pipes from the hydraulic oil pump and hydraulic oil pump filter housing.

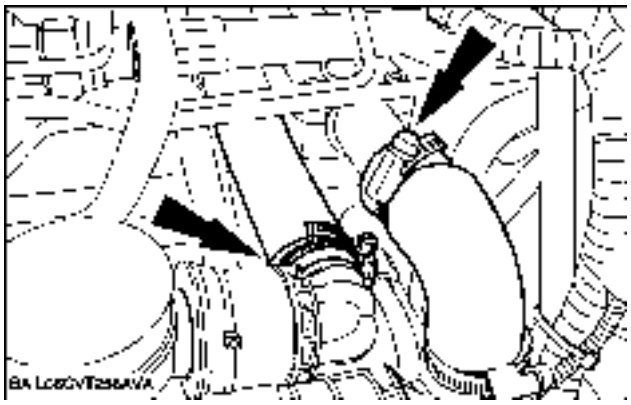

BAIL08CVT258AVA 3

4. Disconnect the hydraulic charge pipe **(1)**.
Disconnect the electrical connectors **(2)**.

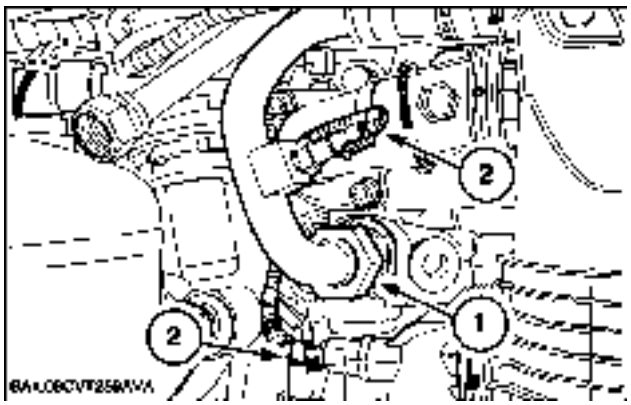

BAIL08CVT259AVA 4

https://tractormanualz.com/

5. Disconnect the hydraulic pipe.

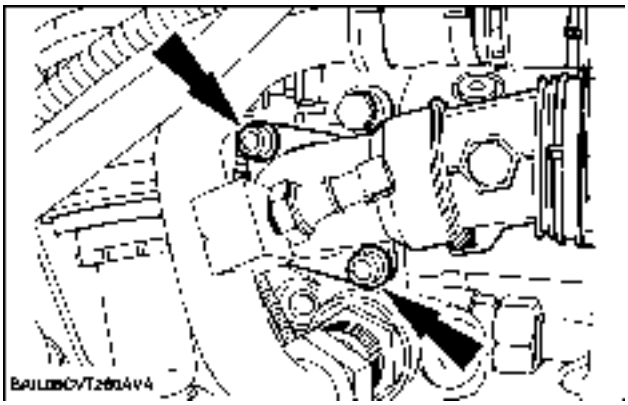

BAIL08CVT260AVA 5

6. Remove the retaining bolt from the rear axle housing.

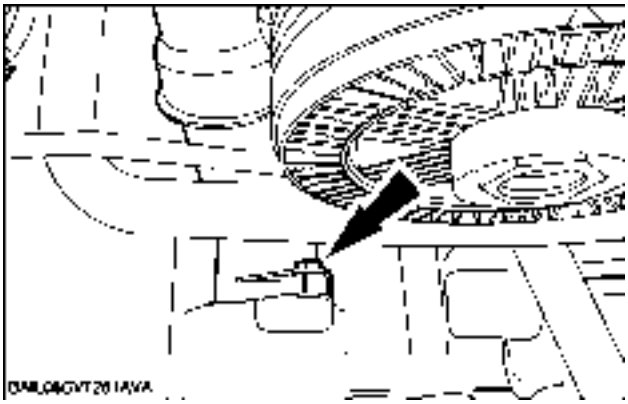

BAIL08CVT261AVA 6

7. Disconnect the mid mounted remote valve return hose (where fitted).

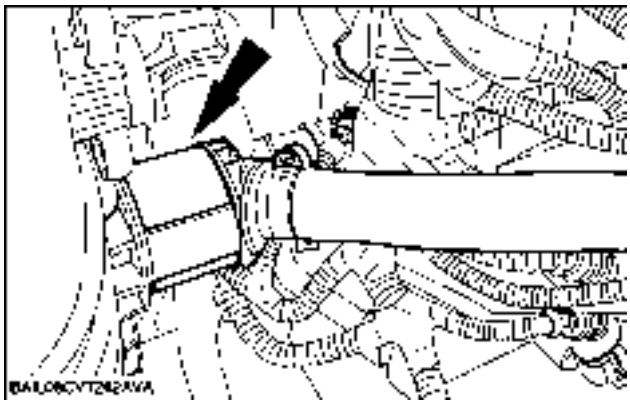

BAIL08CVT262AVA 7

8. Loosen the retaining bolts and remove the hydraulic oil pump filter housing.

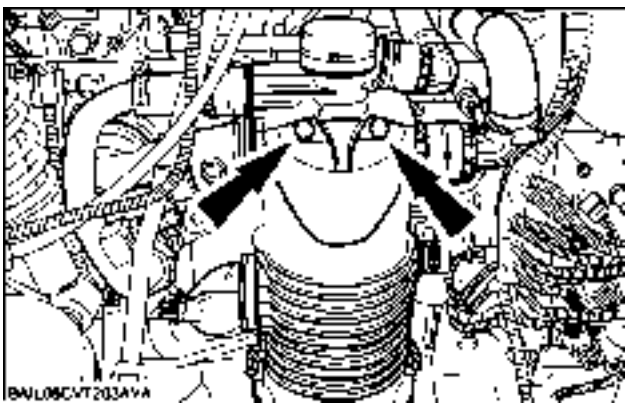

BAIL08CVT263AVA 8

https://tractormanualz.com/

Filter - Install

1. Install the filter housing to the rear axle housing and tighten the retaining bolts to **40 Nm** (**29.5 lb ft**).
2. Connect all the relevant hoses and pipes. Ensure the filter oil filter vent cap is tightened.

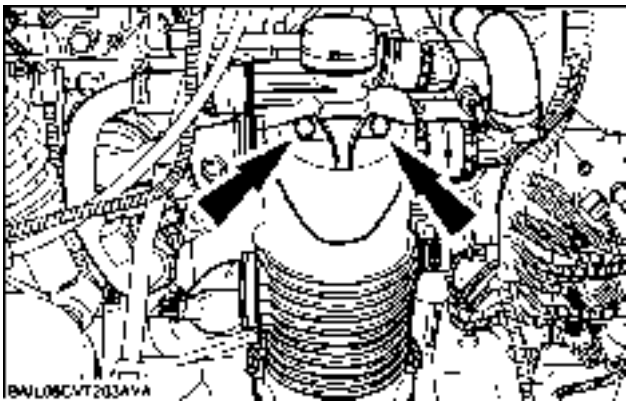

BAIL08CVT263AVA 1

https://tractormanualz.com/

Filter - Replace

1. Before changing the main filter cartridge in housing **(3)** Figure **1** , release the air bleed valve **(2)** by unscrewing fully. This will allow air into the filter so that most of the oil can drain back to the reservoir. Wait a few moments and then remove the 19 mm plug **(5)** from the filter casing and allow the oil to drain out into a suitable container.

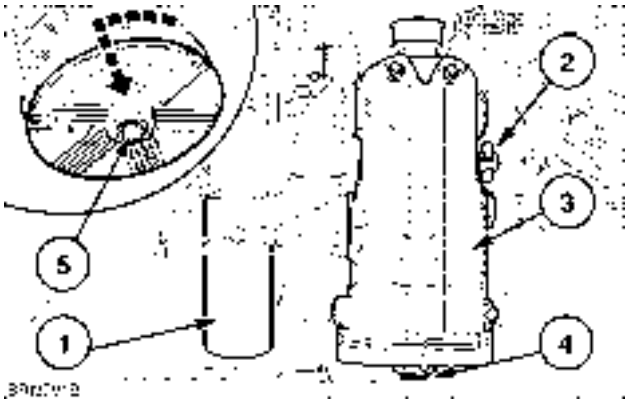

BAIL06CCM090ASA 1

2. Using as **41 mm** socket or ring spanner, remove the filter support plate by turning approximately **45 °** to the left. Remove filter and plate.

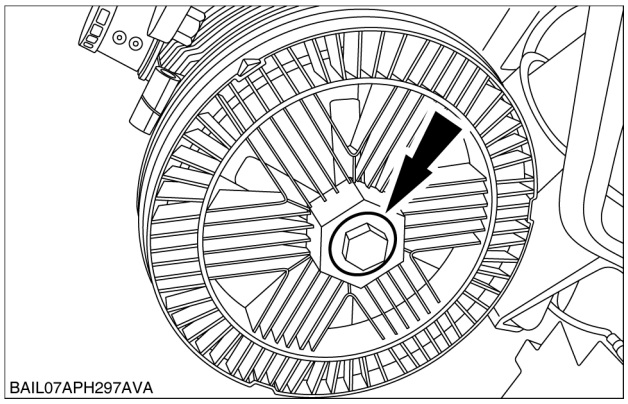

BAIL07APH297AVA 2

3. Ensure support plate is clean before installing the new cartridge. Lightly oil the sealing ring and refit the assembly to the filter housing, making sure that plate locks into place and the lug **(4)** (Figure **1**) aligns correctly with the arrow on the filter casing.

NOTE: *When replacing the main filter cartridge the bottom cover sealing ring must also be replaced.*

4. Unscrew the vane pump filter **(2)** and charge pump filter **(3)** and discard in an appropriate container.

5. Clean the inlet channel and the face of the filter mountings. Smear clean oil around the rubber seal of the new filters and install into the filter housings. Screw up until the faces just meet, then tighten a further 3/4 of a turn. Do not overtighten.

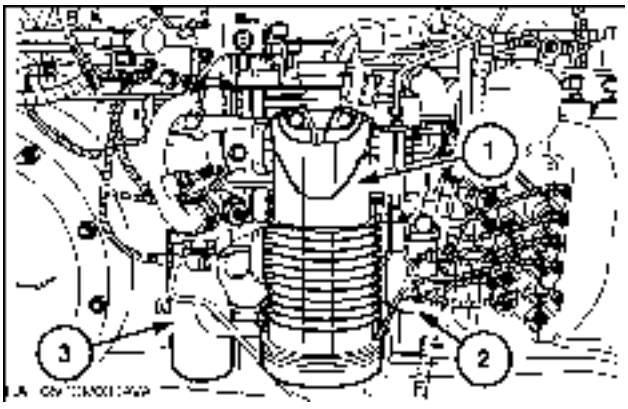

BAIL08CCM030AVA 3

https://tractormanualz.com/

PRIMARY HYDRAULIC POWER SYSTEM - Troubleshooting

Problem	Possible Cause	Correction
Initial fault finding checks to be performed before proceeding to general diagnostic procedure	Error code identified by microprocessor Component malfunction	Refer to error code fault finding list or search using fault code search facility (interactive CD only)
	Rear axle oil level incorrect Oil level not checked and adjusted at appropriate service interval	Add oil to rear axle
	Oil contaminated with dirt, water, or antifreeze Filters not replaced at correct service interval	Replace all filters on pump. See **Filter - Replace (A.10.A)**
	Warning light displayed on instrument cluster Component not functioning correctly	Identify function not operating correctly and refer to the appropriate fault finding chart
Charge Pressure Light Flashing	Rear axle oil level incorrect Oil level not checked and adjusted at appropriate service interval	Add oil to rear axle
	If charge pressure is correct **2 - 4 bar** (**29.0 - 58.0 psi**) disconnect wiring to low charge pressure switch. If the light is not extinguished Short circuit to chassis in wire from instrument console connector and charge pressure switch **X473**	Locate and repair short circuit
	As above, but light is extinguished Blocked/contaminated filters	Replace charge pump and inlet filters Refer to **Filter - Replace (A.10.A)**
	If filters have been replaced and pressure is correct Faulty low charge pressure switch	Replace low charge pressure switch
	Filters changed but still pressure is incorrect Charge pressure filter dump valve and charge pressure valves sticking open	Replace valves
	Filters changed but still pressure is incorrect Worn charge pump	Replace pump. See **Hydraulic pump Variable displacement pump - Overhaul (A.10.A)**
Power Steering Not Working or Working Incorrectly	Steering pressure warning light is illuminated Incorrect pressure in the steering system	Pressure test the steering system as described in **STEERING Hydraulic - Pressure test (D.20.C)** .
	Steering pressure warning light is illuminated Hydraulic pump faulty or priority valve sticking	Remove pump and examine the drive to the pump, if O.K. repair or replace the pump assembly (refer to **Hydraulic pump Variable displacement pump - Remove (A.10.A)** and **Hydraulic pump Variable displacement pump - Overhaul (A.10.A)**). Check if priority valve spool is sticking . Refer to **Priority valve - Remove (A.14.A)**
	Pressure is correct up to the steering cylinders Mechanical fault in the steering components	If pump output is good but pressure to the cylinders is low or zero, suspect a faulty steering motor. See **Control valve - Remove (D.20.C)** and **Control valve - Overhaul (D.20.C)**for steering motor removal and overhaul.
Hydraulic Lift Not Working Correctly	In cab fast raise/work switch not in correct position	Move switch to work position
	Is hitch enabled symbol illuminated	Capture hitch Check position of controls on control panel

https://tractormanualz.com/

Problem	Possible Cause	Correction
	Charge pressure light flashing Charge pump system problem	refer to charge pressure light flashing fault finding chart **Charge pump - Flash (A.10.A)**
	Electronic draft control error code identified	Refer to Electronic draft control fault codes in fault code chapter or search using fault code search facility (interactive CD only)
	Trailer brakes (if fitted) not working correctly. (Install a pressure gauge in the trailer brake coupler) Fault in the variable displacement pump	Pressure test the pump to determine the fault Refer to **Hydraulic pump - Pressure test (A.10.A)**
	Remote valves not operating correctly. (Install a pressure gauge in the remote valve coupler and check pressure and flow) Contaminated components in priority valve assembly	Inspect the priority valve assembly for sticking spool. dirt contamination or broken components. Rectify as required Refer to **Priority valve - Disassemble (A.14.A)**
	Hydraulic lift working erratically Circuit leak	Perform pump leak test to determine if fault relates to either internal leak or hydraulic circuit leak
	Lift arms locked in either fully raised or lowered position Sticking plunger in EDC valve raise or lower solenoid	Check EDC valve raise or lower solenoid for sticking plungers and rectify accordingly. Refer to **Control valve - Disassemble (H.10.D)**
	Perform low standby pressure test . If pressure is not **24 - 26 bar** (**348.0 - 377.0 psi**)) Flow compensating valve requires examination or adjustment	Adjust/examine flow compensating valve . Refer to **Compensator - Overhaul (A.10.A)**
	Perform standby pressure test . If pressure is not **24 - 26 bar** (**348.0 - 377.0 psi**)) Variable displacement pump swash plate sticking	Disassemble variable displacement and check swash plate piston for sticking. Refer to **Hydraulic pump Variable displacement pump - Overhaul (A.10.A)**
	Standby pressure is correct and whilst operating remotes at high pressure standby hydraulic lift operates correctly Fault in load sensing line from EDC valve	Investigate and rectify fault in load sensing line
	If the hydraulic lift does not operate correctly Sticking spools in EDC valve or leaking lift cylinder safety valve	Examine EDC valve for sticking spool and rectify or if lift cylinder safety valve is leaking replace.
	If the hydraulic lift does not operate correctly Lift arms leak down under pressure if heavy weight is placed on them	Overhaul lift cylinder
All of the EHR valves are inoperative	Isolator switch not activated	Press the switch to activate
	Faulty switch	Check operation of the switch using a suitable multi-meter and if faulty replace the switch
	EHR relay not operating	Replace the relay (Refer to **Fuse and relay box - General specification (A.30.A)**
	EHR CAN BUS wiring faulty	Disconnect one of the remote valve connectors and using a suitable multi-meter check the resistance of the CAN wiring between terminals 2 and 3 (blue and red). If the resistance is not approximately **120 Ω** Trace the fault in the wiring and repair If the resistance is approximately **120 Ω** reload the software into the XCM processor - RM Module If the EHR's are still inoperative replace the processor with one of known performance

https://tractormanualz.com/

Problem	Possible Cause	Correction
One or more EHR valves do not operate	Error code 4*** displayed on instrument cluster	Refer to **Control module - Fault code index (A.50.A)**
	If hydraulic lift is not working this may indicate a high pressure system fault	Refer to **HITCH Electronic draft control - Not function (H.10.D)**
	If hydraulic lift is working flow compensating valve could be faulty	Operate and hold control lever to test maximum system pressure at each remote valve coupler. If pressure at each valve coupler is below **205 - 210 bar** (**2972.5 - 3045.0 psi**)) examine flow/pressure compensating valve for sticking Repair or replace the flow compensating valve
	Load Sensing valve between valve sections requires check	Operate all remote valve levers simultaneously and check if the pressure at the defective remote valve is **205 - 210 bar** (**2972.5 - 3045.0 psi**))
	Faulty remote valve	Operate all remote valve levers simultaneously and check if the pressure at the defective remote valve is not **205 - 210 bar** (**2972.5 - 3045.0 psi**)) overhaul remote valve which failed the pressure test - Refer to **PRIMARY HYDRAULIC POWER SYSTEM Electro-hydraulic remote valve - Disassemble (A.10.C)**
Remote Control Valves Not Working - Electro-Hydraulic (EHR) Type	When the key start is switched on the EHR control lever solenoids cannot be heard to activate Faulty fuse (24)	Replace fuses if faulty. (Refer to **Fuse and relay box - General specification (A.30.A)**
	The EHR control lever solenoids can be heard to activate Hydraulic stop button not in the operating position	Activate switch to the operating position
	Hydraulic stop button is in operating position Hydraulic lift not working	Refer to 'Hydraulic lift not working' **HITCH Electronic draft control - Not function (H.10.D)**
	Hydraulic stop button is in operating position EHR enable relay faulty	Replace the relay
	Hydraulic stop button is in operating position EHR fault codes may be stored in the controller memory	Refer to the fault code chapter or search using the fault code search facility (interactive CD only)
	Hydraulic stop button is in operating position Components in low pressure system may not be operating correctly	Low pressure supply to remotes not available. Fault find the low-pressure system.
	Hydraulic lift and remote valve are operated simultaneously and pressure is registered from the remote coupler Fault in the load sense circuit or the compensating valve in the variable displacement pump	Identify and remedy fault
	Hydraulic lift and remote valve are operated simultaneously and pressure is not registered from the remote coupler Fault in the electrical system	Perform the EHR valve renumbering procedure **Control module - Configure (A.50.A)**. If the valves are still inoperative check the CAN BUS wiring between the remotes and the central controller. If the fault still persists reload the software into the central controller and if still inoperative replace the processor

https://tractormanualz.com/

Index

DISTRIBUTION SYSTEMS - A

PRIMARY HYDRAULIC POWER SYSTEM - 10.A

Charge pump - Exploded view 29
Compensator - Exploded view 30
Compensator - Overhaul 46
Filter - Install 50
Filter - Remove 48
Filter - Replace 51
Hydraulic line - Overview 32
Hydraulic pump Variable displacement pump - Dynamic description 23
Hydraulic pump Variable displacement pump - General specification 6
Hydraulic pump Variable displacement pump - Install 44
Hydraulic pump Variable displacement pump - Overhaul 40
Hydraulic pump Variable displacement pump - Remove 37
Hydraulic pump Variable displacement pump - Sectional view 28
Hydraulic pump Variable displacement pump - Static description 25
Power beyond - Install 36
Power beyond - Remove 35
PRIMARY HYDRAULIC POWER SYSTEM - Hydraulic schema 8
PRIMARY HYDRAULIC POWER SYSTEM - Special tools 4
PRIMARY HYDRAULIC POWER SYSTEM - Static description 11
PRIMARY HYDRAULIC POWER SYSTEM - Static description Pressure testing 17
PRIMARY HYDRAULIC POWER SYSTEM - Torque 4
PRIMARY HYDRAULIC POWER SYSTEM - Troubleshooting 52
Relief valve - Static description Air bleed relief valve 22

https://tractormanualz.com/

https://tractormanualz.com/

DISTRIBUTION SYSTEMS - A

PRIMARY HYDRAULIC POWER SYSTEM Electro-hydraulic remote valve - 10.C

Puma 165 CVX
Puma 180 CVX
Puma 195 CVX
Puma 210 CVX
Puma 225 CVX

https://tractormanualz.com/

Contents

DISTRIBUTION SYSTEMS - A

PRIMARY HYDRAULIC POWER SYSTEM Electro-hydraulic remote valve - 10.C

TECHNICAL DATA
PRIMARY HYDRAULIC POWER SYSTEM Electro-hydraulic remote valve
Torque . . . 3
Remote control valve
Torque . . . 4
Mid-mount remote control valve
Torque . . . 5

FUNCTIONAL DATA
PRIMARY HYDRAULIC POWER SYSTEM Electro-hydraulic remote valve
Hydraulic schema . . . 6
Static description . . . 7
Sectional view . . . 11
Exploded view . . . 12
Mid-mount remote control valve
Exploded view . . . 13
Static description . . . 14

SERVICE
PRIMARY HYDRAULIC POWER SYSTEM Electro-hydraulic remote valve
Remove . . . 19
Install . . . 21
Disassemble . . . 24
Calibrate . . . 25
Coupler
Overhaul . . . 28
Mid-mount remote control valve
Remove . . . 29
Disassemble . . . 31
Assemble . . . 32
Install . . . 36
Stack valve
Remove . . . 37
Install . . . 39

https://tractormanualz.com/

PRIMARY HYDRAULIC POWER SYSTEM Electro-hydraulic remote valve - Torque

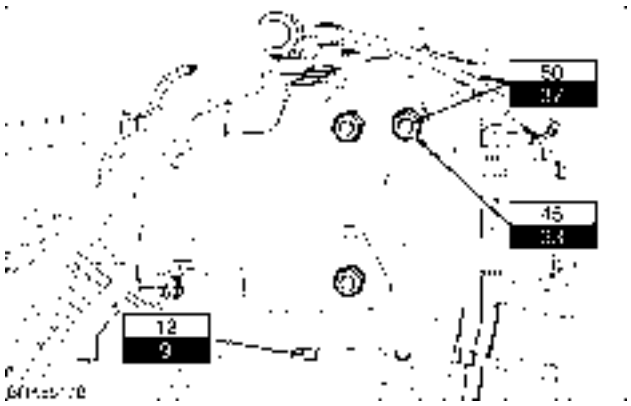

BAIL08CVT001ASA 1

https://tractormanualz.com/

Remote control valve - Torque

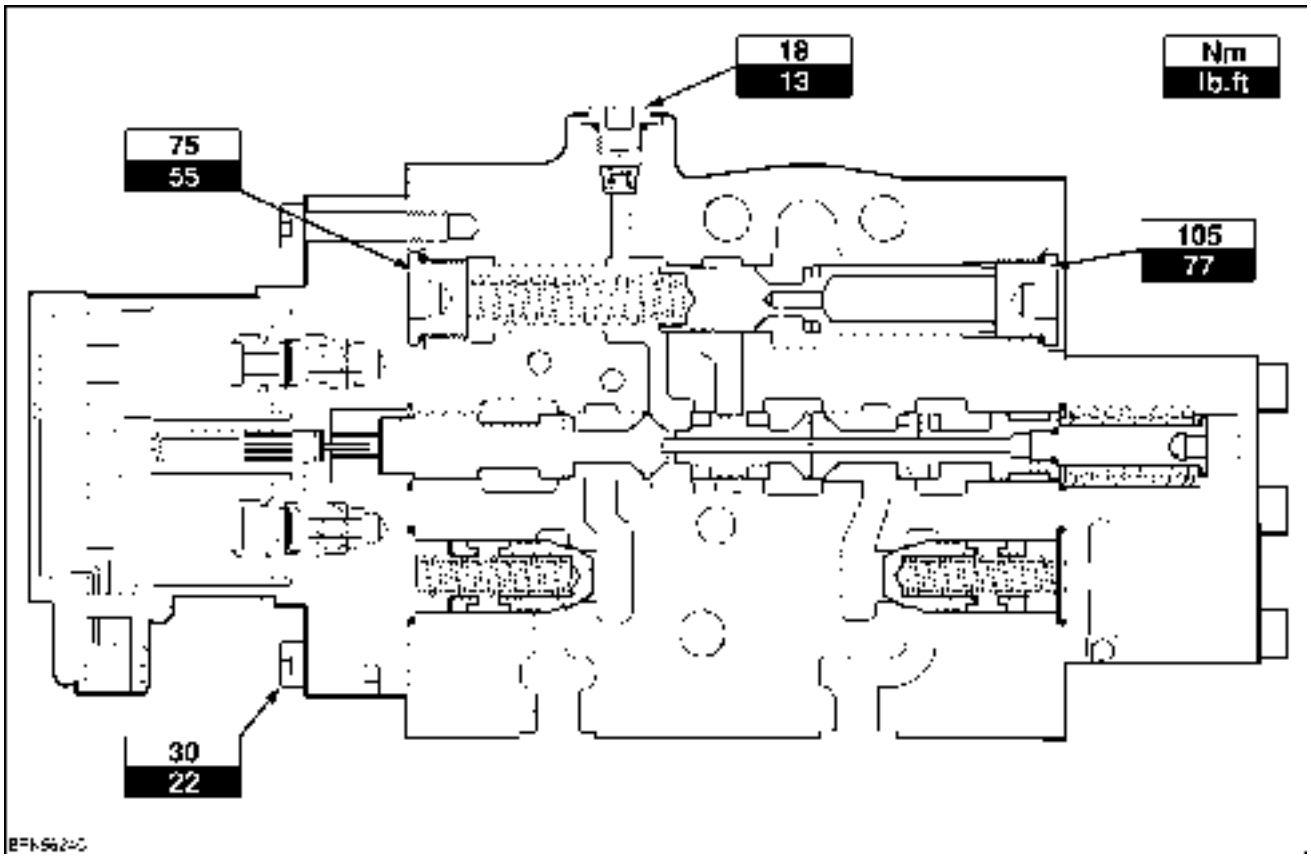

BAIL08CVT143FSA 1

https://tractormanualz.com/

Mid-mount remote control valve - Torque

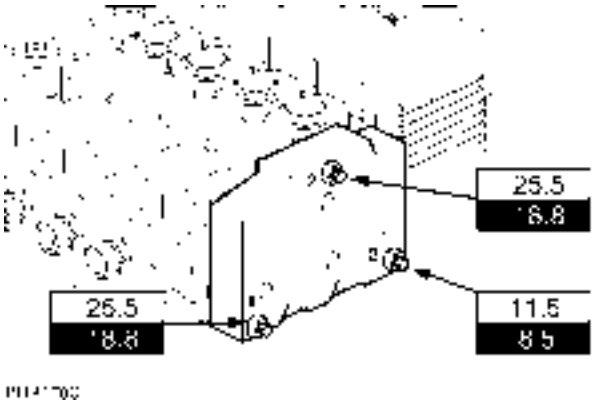

BAIL06CCM141ASA 1

Mid Mount Valve Assembly Torques showing tightening sequence
Refer to Mid-mount remote control valve - Assemble (A.10.C)

https://tractormanualz.com/

PRIMARY HYDRAULIC POWER SYSTEM Electro-hydraulic remote valve - Hydraulic schema

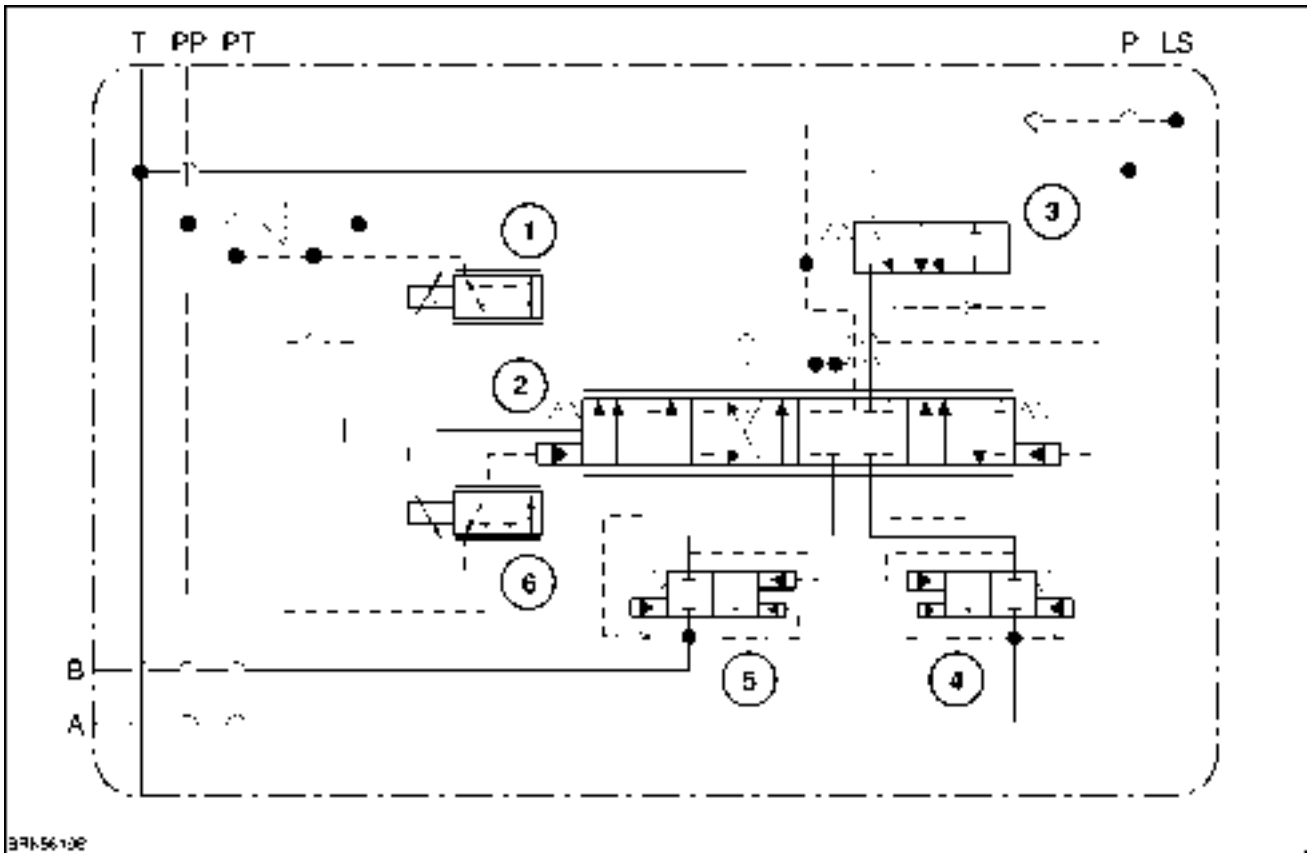

BAIL08CVT142FSA 1

1. Solenoid
2. Main spool
3. Pressure compensating spool
4. Check valve
5. Check valve
6. Solenoid

A Extend port
B Retract port
T Return to tank
PP Pilot pressure line
PT Pilot tank line
P Pressure line
LS Load sense line

https://tractormanualz.com/

PRIMARY HYDRAULIC POWER SYSTEM Electro-hydraulic remote valve - Static description

Electro-hydraulic remote valves are standard on all models.
Each remote valve has its own built in micro processor which controls the oil flow through a solenoid activated valve, based on inputs received from the operator controlled switches. Maximum flow rate for each valve is **140 l/min** (**37 US gpm**).
Each remote valve is connected into the electrical CAN BUS system to the XCM processor , which is located in a panel behind the operators seat. Each remote valve can detect system faults and send a message to the processor which in turn sends a signal to allow a fault code to be displayed on the integrated control panel.

Controls

The controls for the remote valves are located on the right hand armrest unit of the operator seat. Remotes valves I to IV are operated by control levers **(1)**, **(2)**, **(3)**, and **(4)** in the right-hand console. Each control lever is numbered to correspond to the relevant remote valve. A maximum of five electro-hydraulic remote valves may be fitted.

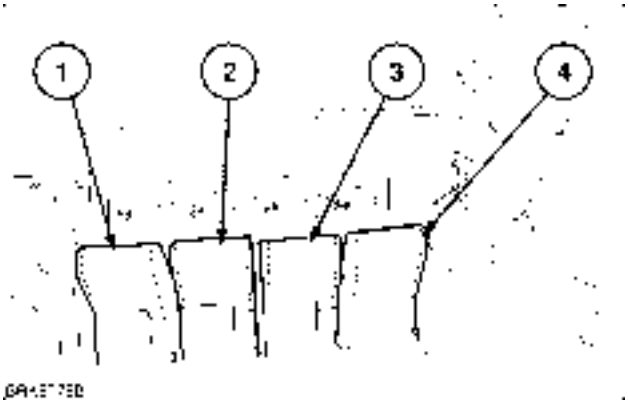

BAIL08CVT030ASA 1

The fifth valve is operated by a switch **(1)** situated on the multifunction control lever.

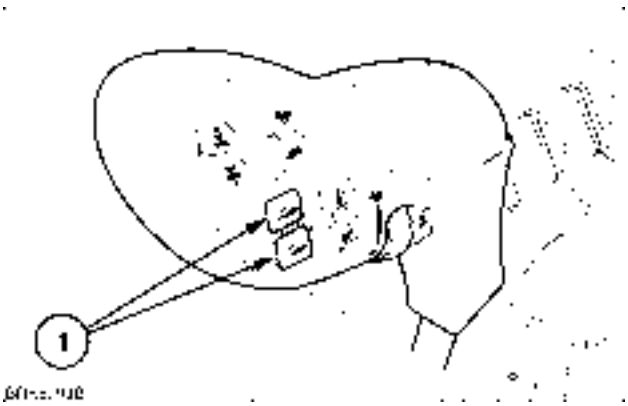

BAIL08CVT053ASA 2

https://tractormanualz.com/

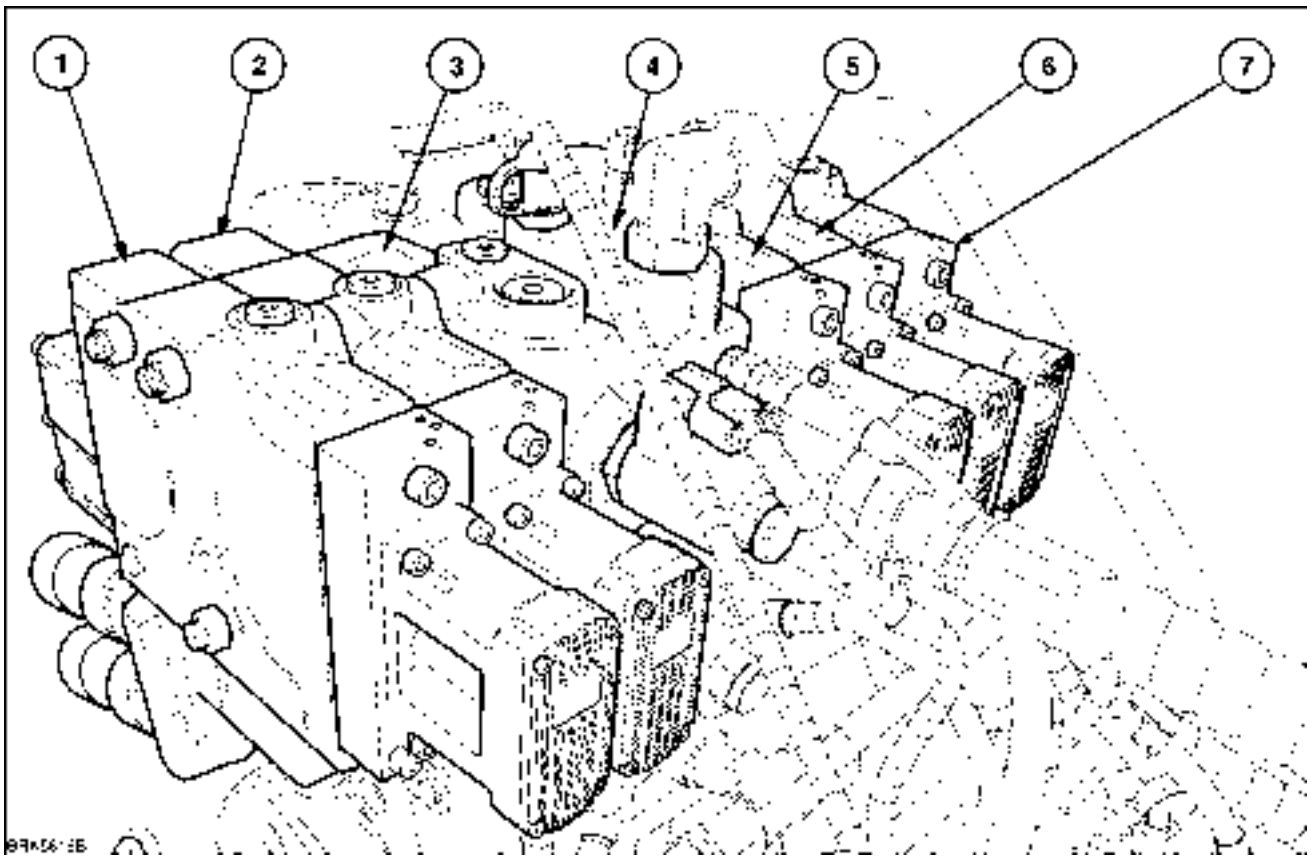

BAIL08CVT003FSA 3

Remote control valve layout

1.Remote valve No.1
2.Remote valve No.2
3.Electronic draft control valve
4.Manifold block
5.Remote valve No.3
6.Remote valve No.4
7.Remote valve No.5

https://tractormanualz.com/

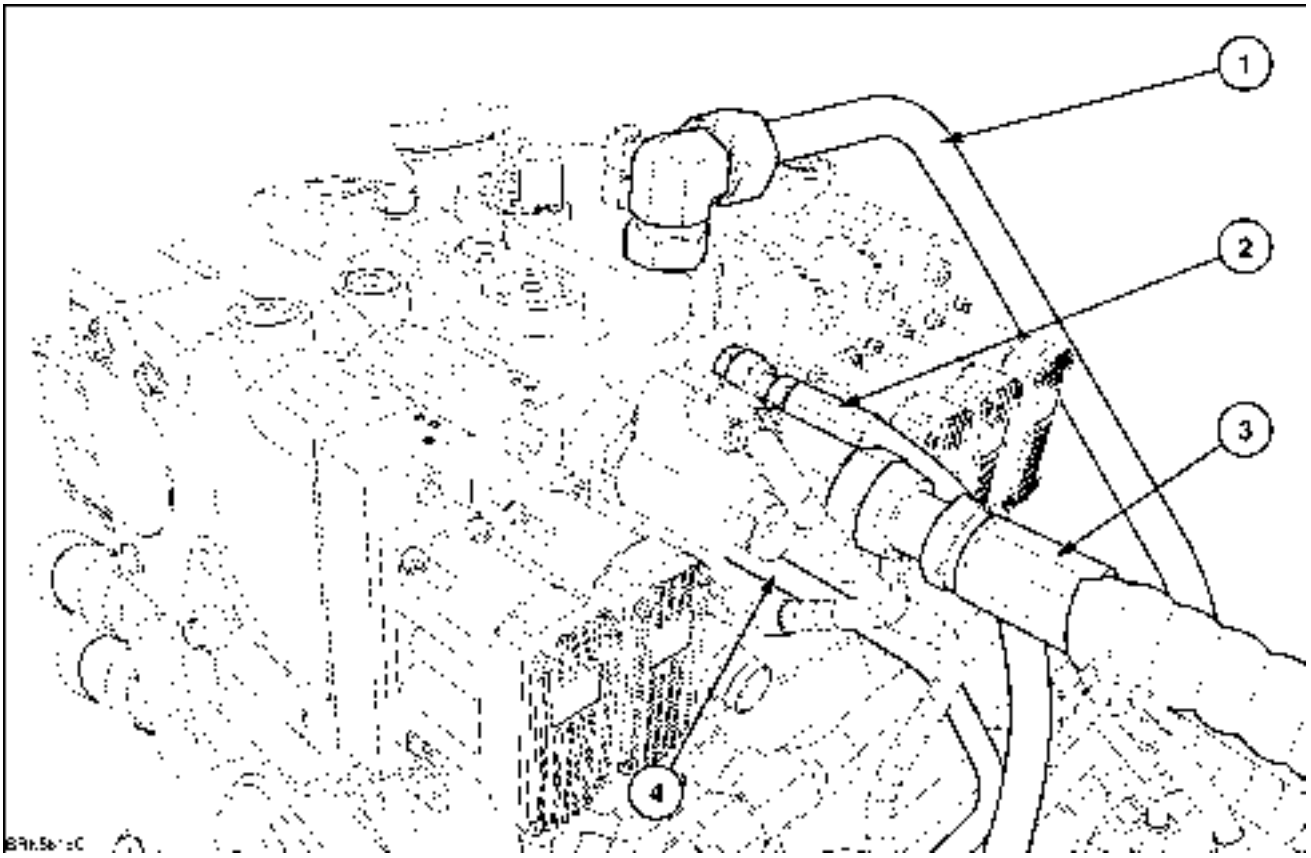

BAIL08CVT042C 4

Hydraulic connections

1.Return to tank pipe
2.Load sensing hose
3.Pressure feed Hose
4.Pilot supply hose

All valve sections have a common parallel inlet and return to reservoir gallery. The electro-hydraulic remote valve sections also have common galleries for the control valve pilot pressure and return oil.
The load sensing gallery passes through the centre of the valve stack and signals the pump to increase or decrease output according to demand.
The parallel gallery and load sensing system enables two or more valves to be operated simultaneously without loss of efficiency.
'O' ring seals **(1)** and load sense check valves **(2)** between each valve section ensure the highest circuit load sense pressure is transmitted to control output of the hydraulic pump.
The principal hydraulic components within each Electro-Hydraulic remote control valve section are:-

Solenoid valve assembly (refer to **PRIMARY HYDRAULIC POWER SYSTEM Electro-hydraulic remote valve - Sectional view (A.10.C)**)

A signal to operate a solenoid activated valve is received from the operator control switches into the microprocessor of the control unit. The spool within the solenoid valve moves according to the forces of the solenoid which allows pilot oil pressure, regulated to **22 - 25 bar** (**319.0 - 362.5 psi**), to act on the control valve spool. The control unit is also able to accurately sense the position of the spool and can detect errors in the system, via the CAN BUS electric system. These errors will be displayed as fault codes which are in the 4000 range.

Pressure compensating spool.

Ensures that if more than one remote valve is operated that the available oil flow is proportionally distributed amongst the valves being operated depending on demand. The Pressure compensating spool senses the differential pressure within the valve and regulates the flow accordingly. Because each flow control spool individually senses the pressure in the remote valve being operated, two or more circuits working at different pressures can be controlled simultaneously.

Load sense check Valve

https://tractormanualz.com/

The check valve prevents a back flow of pressure from the remote valve circuit when the control spool is operated and pump system pressure is less than the back pressure in the circuit.
This is explained by the following example:-
When a cylinder is holding a heavy load and the control valve spool is moved from the neutral to raise position, the pump system pressure may be less than the back pressure in the remote valve circuit. When this occurs the back pressure would cause oil in the circuit to flow backwards and the load to momentarily drop before pump system pressure has risen to hold and then raise the load further. The load sense check valve prevents this situation from occurring.

Lock Valve

The lock valve is located in the raise port of the remote valve and is closed whenever the remote valve is in neutral. The lock valve prevents leakdown of an implement should there be any leakage across the lands of the spool when in the neutral position. The lock valve is automatically opened whenever the control spool is moved from the neutral position.

Main control valve spool

The control valve spool is spring centred to a neutral position and when moved by the regulated pilot pressure, via the solenoid control unit directs oil flow to the raise or lower ports of the control valve.

Spool Centering Spring

The spool centering mechanism spring loads the control valve spool to the neutral position.

https://tractormanualz.com/

PRIMARY HYDRAULIC POWER SYSTEM Electro-hydraulic remote valve - Sectional view

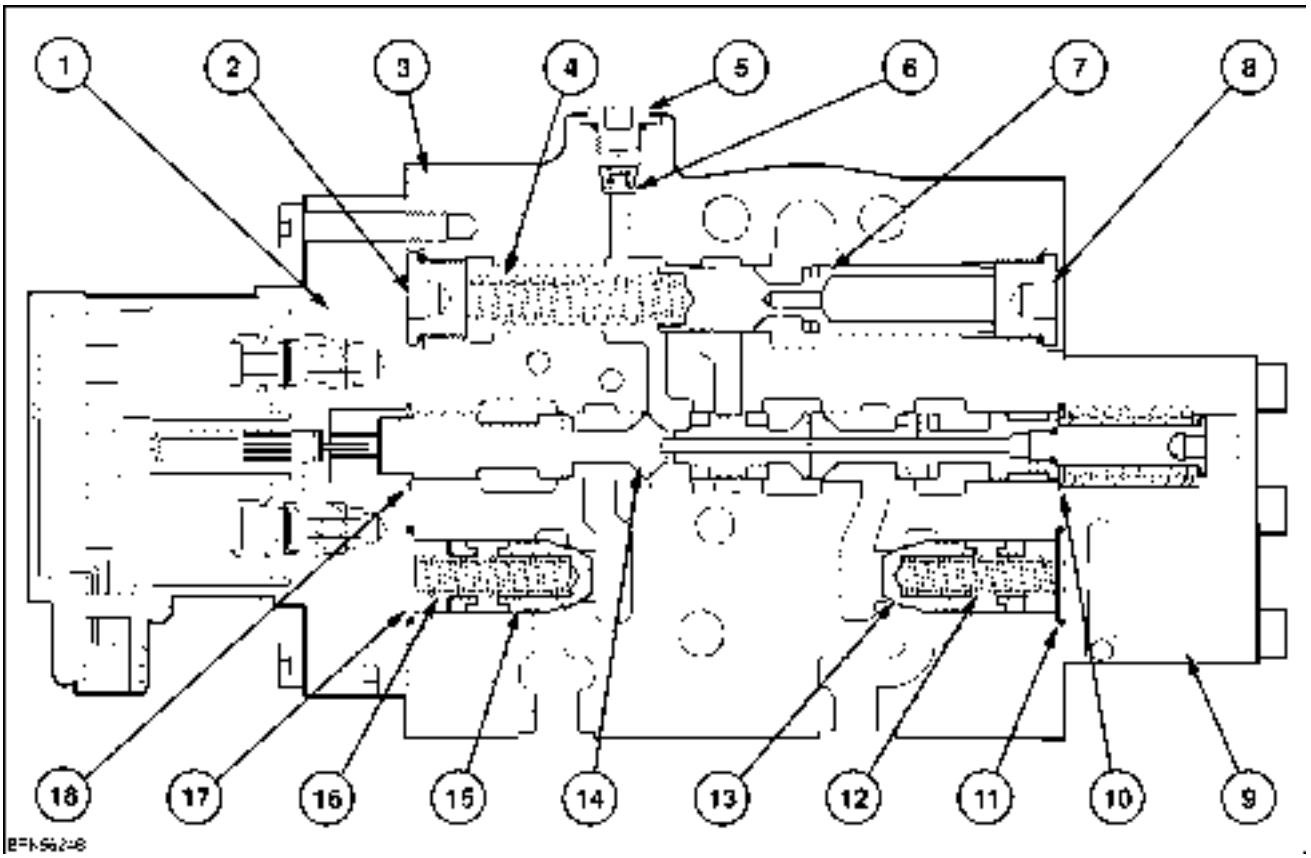

BAIL08CVT004FSA 1

1.Solenoid valve assembly
2.Plug
3.Valve body
4.Spring
5.Plug
6.Load sense check assembly
7.Pressure compensating spool
8.Plug
9.Pilot block assembly
10.Seal
11.Seal
12.Spring
13.Check lock poppet
14.Main spool
15.Check lock poppet
16.Spring
17.Seal
18.Seal

https://tractormanualz.com/

PRIMARY HYDRAULIC POWER SYSTEM Electro-hydraulic remote valve - Exploded view

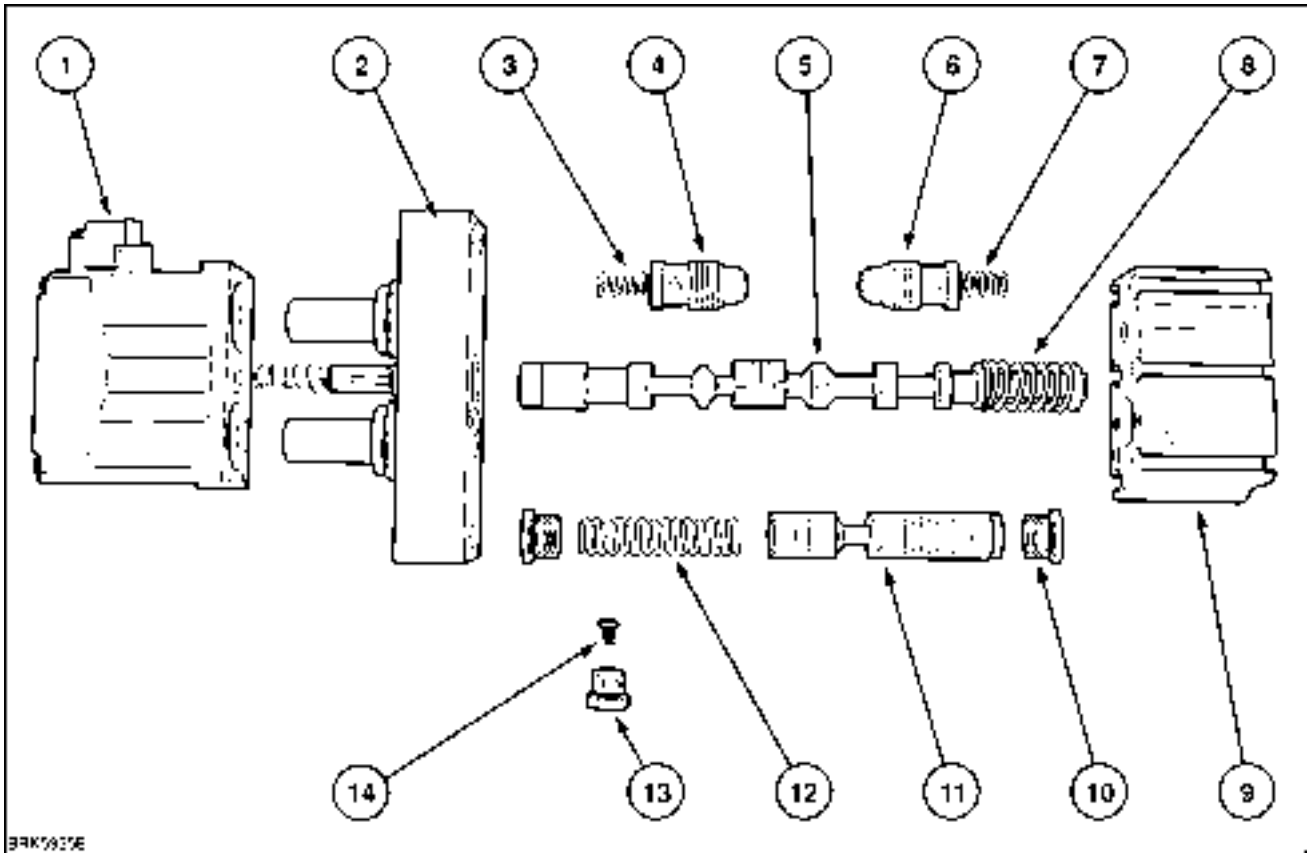

BAIL08CVT125FSA 1

1. Solenoid control unit
2. Solenoid valve manifold
3. Spring
4. Check lock poppet
5. Main spool
6. Check lock poppet
7. Spring
8. Centreing spring
9. Pilot block assembly
10. Plug
11. Pressure compensating spool
12. Spring
13. Plug
14. Load sense check valve

https://tractormanualz.com/

Mid-mount remote control valve - Exploded view

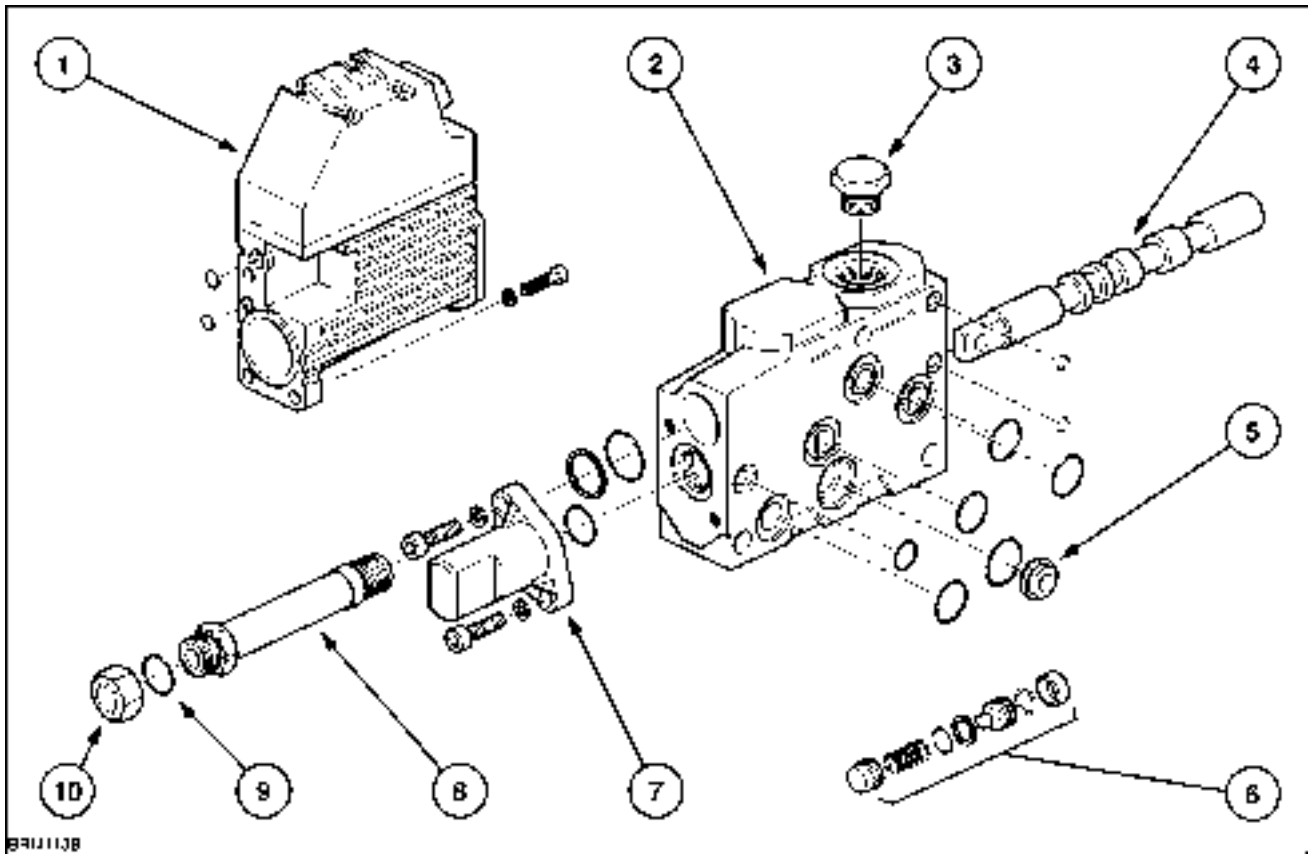

BAIL06CCM125FSA 1

Mid Mount Valve Components

1. Spool Control Unit
2. Valve slice
3. Plug
4. Spool Valve
5. Load Sensing Valve
6. Check Valve
7. End Cap
8. Connection port
9. 'O' Ring
10. Nut

https://tractormanualz.com/

Mid-mount remote control valve - Static description

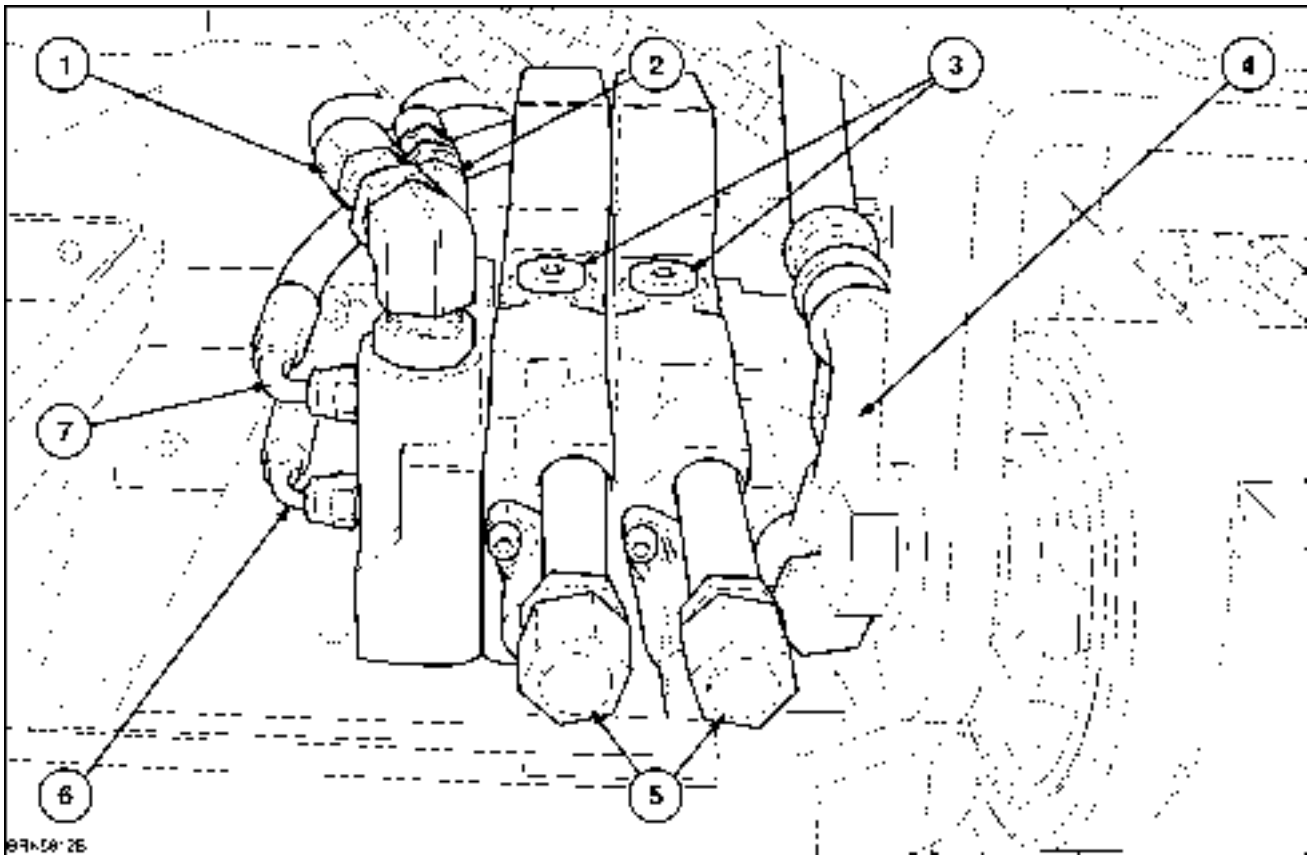

BRK5812B 1

1. High Pressure Supply Hose
2. Pilot Return Line
3. Loader Hose Pressure Port
4. Return Hose
5. Loader Hose Return Port
6. Load Sensing Hose
7. Pilot Line Pressure Hose

Tractors equipped with the Mid Mount Valve option are fitted with an armrest mounted joystick, a mid mount valve assembly, plumbing and loader mounting brackets ready for attaching the loader arms.
The Mid Mount Valve assembly is located underneath the cab on the right hand side. The base version has a two spool valve for raising and lowering the boom and tipping and curling the bucket when used with a loader. Three and four valve options are also available.
The valves are operated by means of a joystick control mounted on the right hand armrest of the seat. For front loader operation an electronic joystick is utilised with a push button switch **(1)** mounted on the top side of the handle and a proportional paddle switch **(2)** mounted on the side of the handle for EHR control.

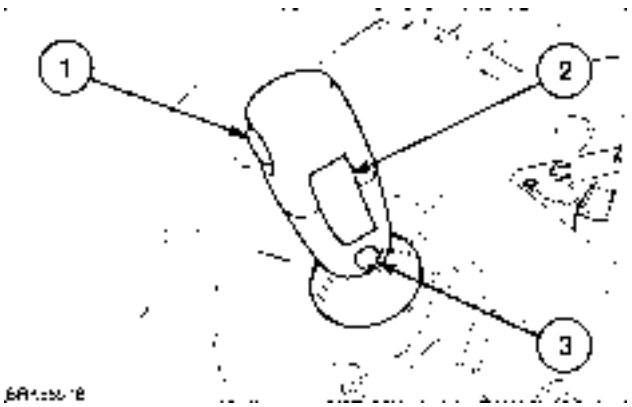

BAIL08CVT039ASA 2

For front hitch operation a three button electronic joystick is used to control the mid mount valves.

https://tractormanualz.com/

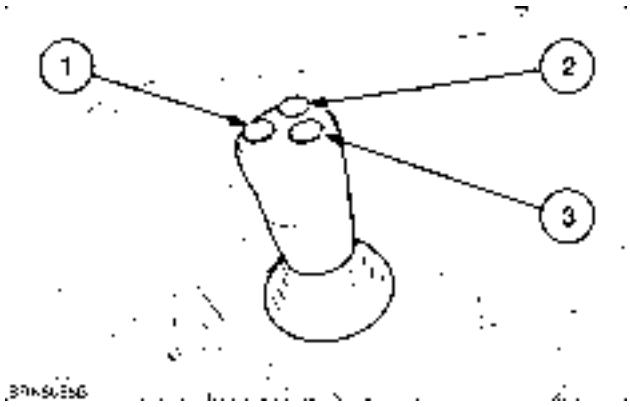

BAIL08CVT038ASA 3

The valves can also be operated by the remote levers also mounted on the armrest.

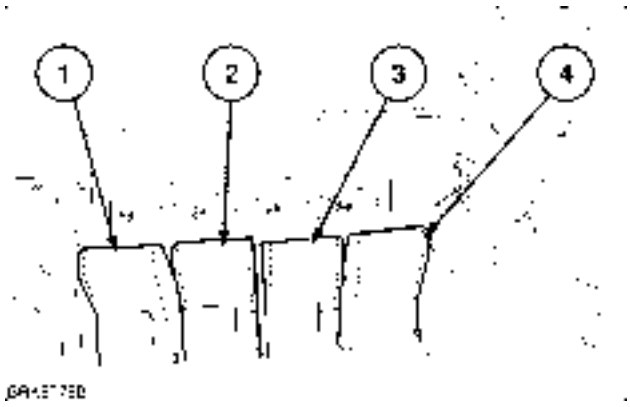

BAIL08CVT030ASA 4

On tractors equipped with both mid and rear mounted valves, the joystick can be used to control either valve pack. At key-on, the joystick indicator lamps will not illuminate and the joystick remains disabled. To activate the joystick, momentarily depress the button **(1)**. The mid-mount valve indicator lamp will illuminate to confirm activation. A selector switch on the armrest console allows the operator to switch joystick control between the rear and mid-mount remote valves Refer to figure **5** .

BAIL08CVT027ASA 5

European loader ready options come complete with a “Multi-Quick" coupler. This allows the couplers to be connected and disconnected at once with the minimum of leakage.

https://tractormanualz.com/

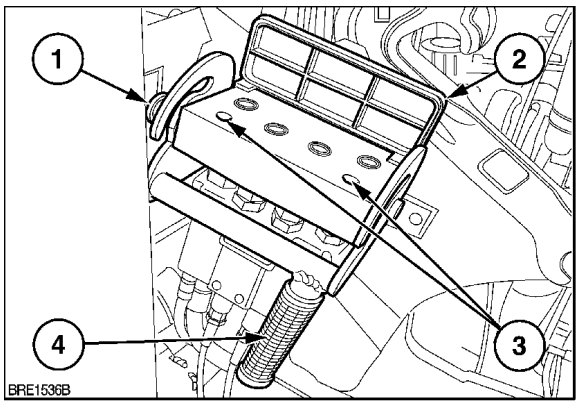

BRE1536B 6

1. Lock Button
2. Protective Cover
3. Alignment Holes
4. Clamp Handle

The mid mount valves are fed high pressure oil from the variable displacement pump via a priority valve block **(1)** located on the rear axle housing on the right hand side.

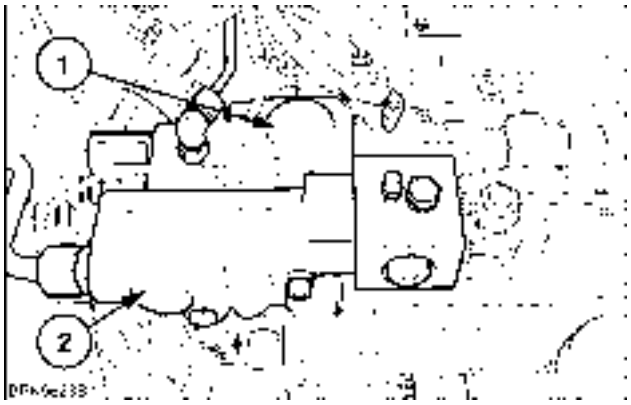

BAIL08CVT007ASA 7

The high pressure oil is fed into the inlet manifold through hose **(1)** .

BAIL08CVT037ASA 8

Return oil is fed back to tank via hose **(1)** to the suction filter

https://tractormanualz.com/

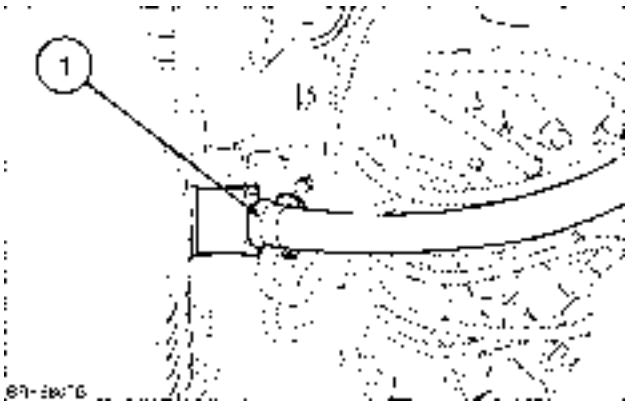

BAIL08CVT033ASA 9

Pilot line pressure is fed from the vane pump by a hose connected to a ‘T‘ connector on top of the hydrostatic motor housing.

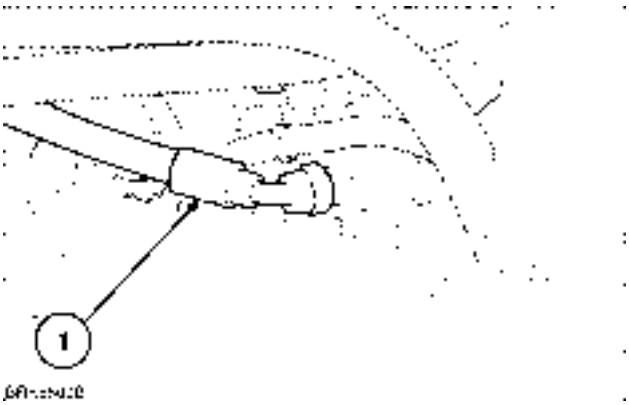

BAIL08CVT035ASA 10

Pilot line return oil is fed back to tank by a hose **(1)** connected to an elbow also on top of the hydrostatic motor housing.

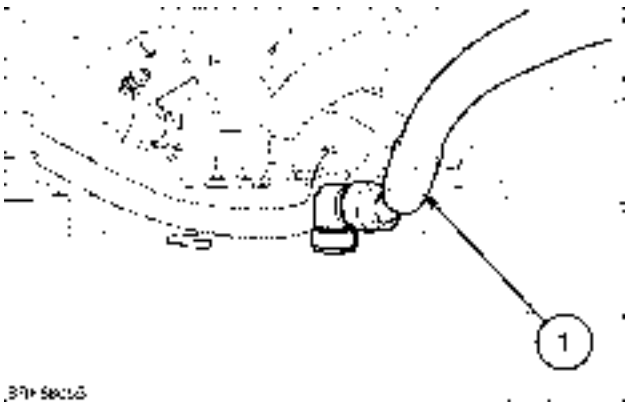

BAIL08CVT032ASA 11

Load sensing oil is fed from a hose **(1)** connected by a ‘T‘ connector on top of the rear axle housing.

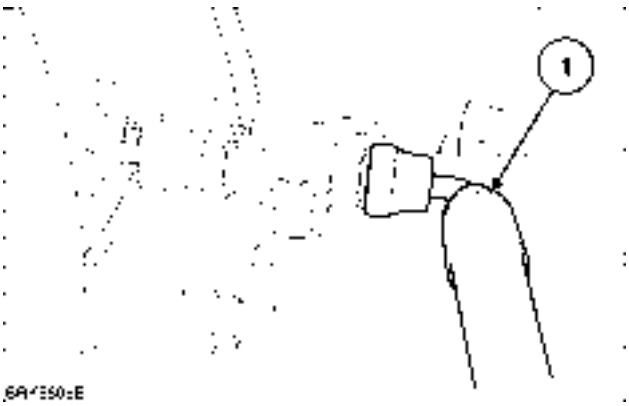

BAIL08CVT034ASA 12

https://tractormanualz.com/

Pilot line pressure oil to operate the electronic solenoids is fed from the low pressure system from hose **(7)** (refer to figure **1**) to the inlet manifold . The load sensing hose **(6)** is also connected at the inlet manifold and feeds back to a 'T' connector on the priority valve block.

https://tractormanualz.com/

PRIMARY HYDRAULIC POWER SYSTEM Electro-hydraulic remote valve - Remove

Prior operation:
Battery - Disconnect (A.30.A)

Removing valves 1 and 2

1. Disconnect the electrical connectors **(1)**.

BAIL08CVT055ASA 1

2. Remove pneumatic trailer brake bracket bolt from the top of the valve assembly **(1)**. Loosen and remove the top two retaining nuts on the side of the remote valve **(2)**. These also retain the trailer brake valve bracket (Where fitted). Undo and remove the remaining retaining nut at the lower part of the valve slice **(3)**.
3. Remove the oil collection bottles.

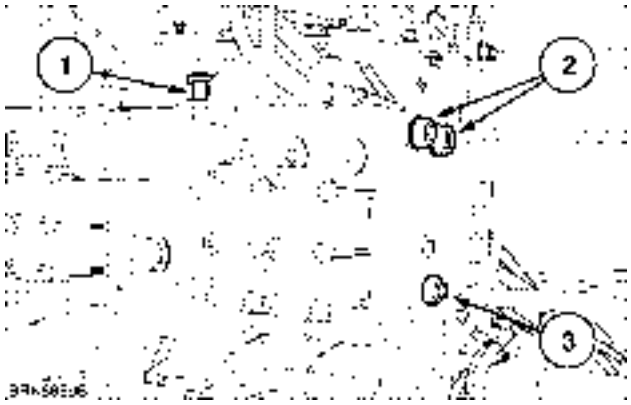

BAIL08CVT054ASA 2

4. Remove the end valve slice **(1)** from the tie rods.

NOTE: *There are O-rings situated between the valve slices. Take care when removing the valves not to dislodge the O-rings.*

BAIL08CVT056ASA 3

https://tractormanualz.com/

Removing valves 3, 4, and 5.(Where fitted)

5. If the machine is fitted with five valves it may be necessary to undo the return pipe from the central manifold in order to remove the fifth valve.

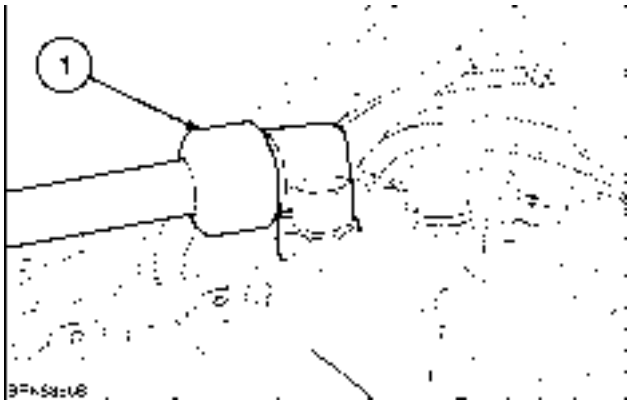

BAIL08CVT061ASA 4

6. Undo and remove the valve slice retaining nuts **(1)**.

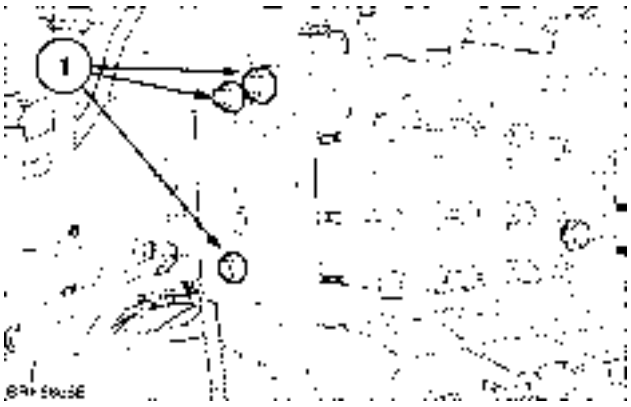

BAIL08CVT060ASA 5

7. Remove valve slice **(1)** from tie rods

BAIL08CVT062ASA 6

8. Remove spacer (where fitted)
9. Remove remaining valve slices

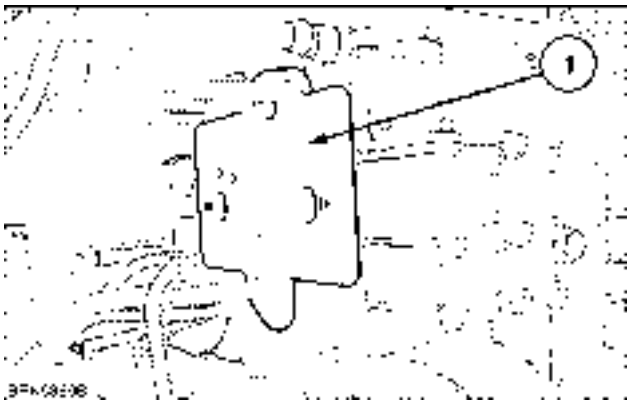

BAIL08CVT064ASA 7

https://tractormanualz.com/

PRIMARY HYDRAULIC POWER SYSTEM Electro-hydraulic remote valve - Install

Valves 3, 4, and 5 (Where fitted)

1. Mount the valve **(1)** on the tie rods ensuring the O-rings are correctly installed.

BAIL08CVT062ASA 1

2. Install the spacer **(1)** (if required)

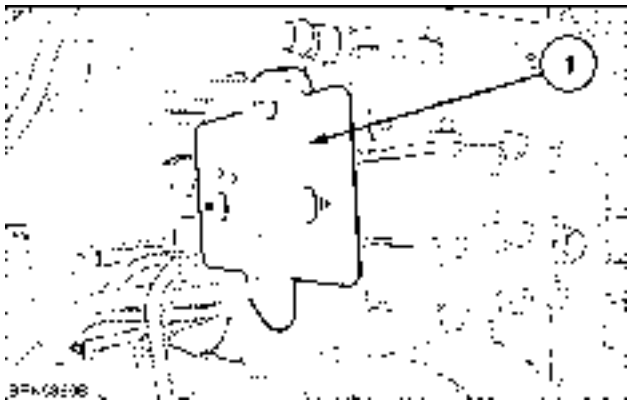

BAIL08CVT064ASA 2

3. Install the end valve slice ensuring all O-rings are in place. Tighten the retaining nuts to **45 Nm** (**33.2 lb ft**).

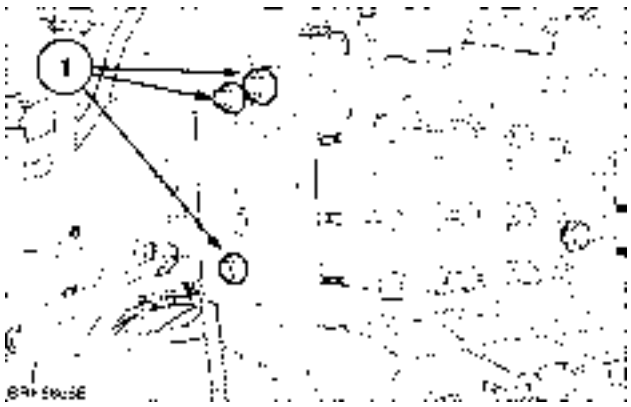

BAIL08CVT060ASA 3

https://tractormanualz.com/

4. Connect return pipe **(1)**.

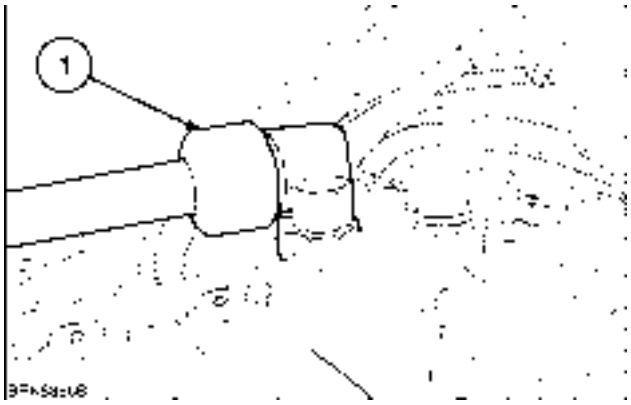

BAIL08CVT061ASA 4

5. Reconnect electrical connectors **(1)** to the remote valve control modules.

BAIL08CVT063ASA 5

Valves 1 and 2

6. Mount valve 2 and then the end slice **(1)** onto the tie rods.

BAIL08CVT056ASA 6

7. Install the pneumatic valve bracket to the valve assembly and tighten the top retaining bolt **(1)** to **85 Nm** (**62.7 lb ft**) and nuts **(2)** and **(3)** to **45 Nm** (**33.2 lb ft**).

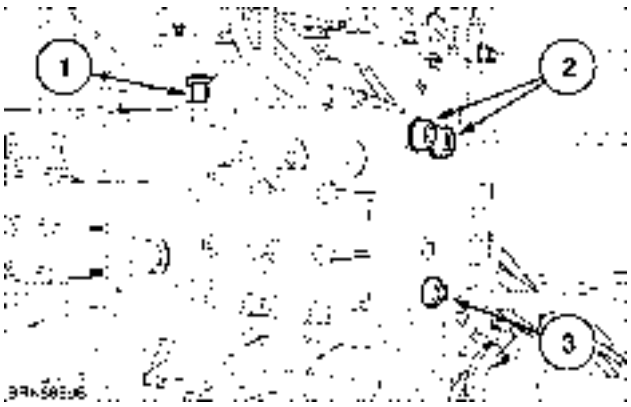

BAIL08CVT054ASA 7

https://tractormanualz.com/

8. Reconnect the electrical connectors **(1)** to the remote valve control modules.

BAIL08CVT055ASA 8

Next operation:
Refer to **Control module - Configure - Front Axle Suspension, Rear Electronic Hydraulic Remote Valves, Front PTO, Front Hitch (A.50.A)** for calibration and valve renumbering.

https://tractormanualz.com/

PRIMARY HYDRAULIC POWER SYSTEM Electro-hydraulic remote valve - Disassemble

NOTE: *If a valve bore shows heavy wear or damage, the valve section must be replaced. Discontinue disassembly and replace the valve section.*

NOTE: *Always replace parts which show heavy wear or damage. if the parts are not serviced separately, the entire valve or valve section must be replaced.*

1. Thoroughly clean the valve section. Use a clean work surface to service the valve.
2. Remove the solenoid manifold from the valve body. See **PRIMARY HYDRAULIC POWER SYSTEM Electro-hydraulic remote valve - Exploded view (A.10.C)** and **PRIMARY HYDRAULIC POWER SYSTEM Electro-hydraulic remote valve - Sectional view (A.10.C)**
3. Remove the solenoid control unit and spring from the end of the solenoid manifold. Inspect the manifold and spring for damage.
4. Remove the main valve spool and spring. Mark which end of the spool is toward the solenoid for reference on reassembly. Inspect the spool and bore for heavy wear or damage. The spool must move freely within the bore.
5. Remove the pressure compensating spool and spring. Inspect the spool and bore for heavy wear or damage: the spool must move freely in the bore.
6. Remove the load sense check valve assembly. .
7. Remove the two signal check valves.

https://tractormanualz.com/

PRIMARY HYDRAULIC POWER SYSTEM Electro-hydraulic remote valve - Calibrate

NOTE: *The calibration procedure is controlled by the electronic management system. To prevent inadvertent movement of the tractor, park the tractor away from any obstacles, firmly apply the parking brake and block the wheels, front and rear. Check that the Ground speed display is Zero before commencing.*

1. Install the diagnostic connector **380000843** into the diagnostic socket **(1)**.

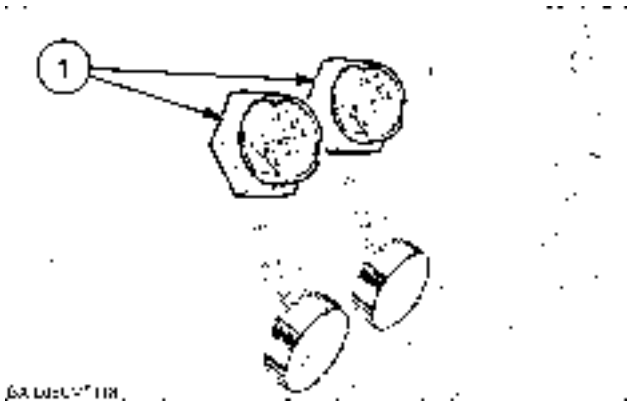

BAIL08CVT118B 1

2. Disconnect all implements from the rear remotes.
3. Make sure all EHR program switches are in the OFF position.
4. Use the "up", "down" and "menu" keys on the ICU3 to navigate the HH menu's to H1 and the rear EHR symbol on the RM controller.
   The top section of the display will show "CAL".

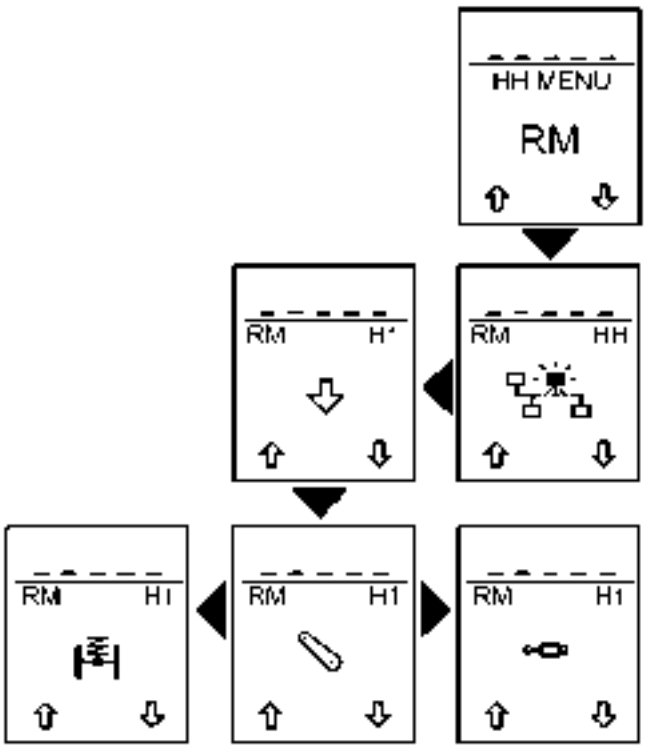

BAIL08CVT051 2

https://tractormanualz.com/

5. Press and hold the program switch **(1)**,for lever No.1 for at least 2 seconds until the display changes.

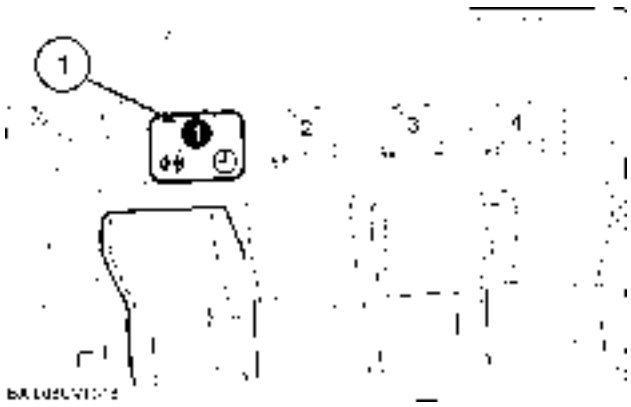

BAIL08CVT318 3

6. The calibration will proceed, the program lamp for EHR 1 will be illuminated and the top section of the display will show "1".
When the neutral position has been acquired and stored, the program lamp is turned off and the top section of the display will show "2".

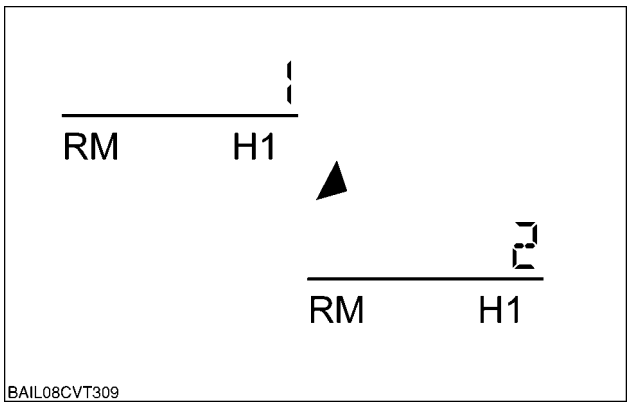

BAIL08CVT309 4

7. While 2 is displayed move the lever to the raise position, the program light will illuminate.
When movement is detected the program lamp for EHR 1 is turned off. After the raise position is established the top section of the display will change to 3, the program light will switch off.

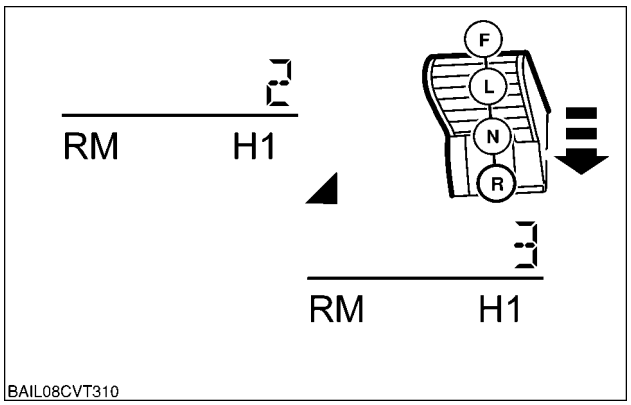

BAIL08CVT310 5

8. While 3 is displayed move the lever to the full flow lower position, the program light will illuminate.
When a stable value for the full flow lower position of the lever is seen it is recorded with the minimum flow rate value, the top section of the display will change to 4, the program light will switch off.

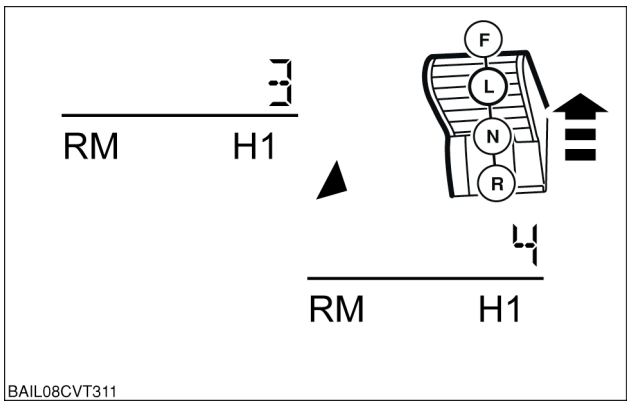

BAIL08CVT311 6

https://tractormanualz.com/

9. While 4 is displayed move the lever to the float position, the program light will illuminate.
   When a stable value for the float position of the lever is seen and recorded the top section of the display will change to "CAL" to indicate the calibration procedure is complete.

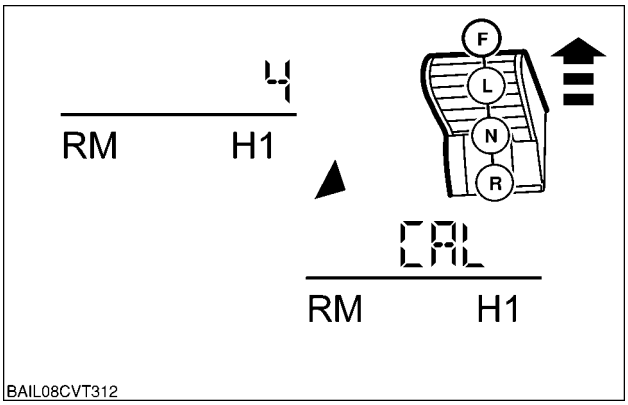

BAIL08CVT312 7

10. To calibrate the remaining EHR levers (2 to 4), repeat the steps 5 to 9.
11. Key OFF to store the calibration values.

NOTE: *If a lever is not calibrated the program lamp is switched on regardless of the program switch state.*

https://tractormanualz.com/

Coupler - Overhaul

1. Remove the 'O' ring and back up ring using a suitable hooked tool.
   Ensure the groove is clean

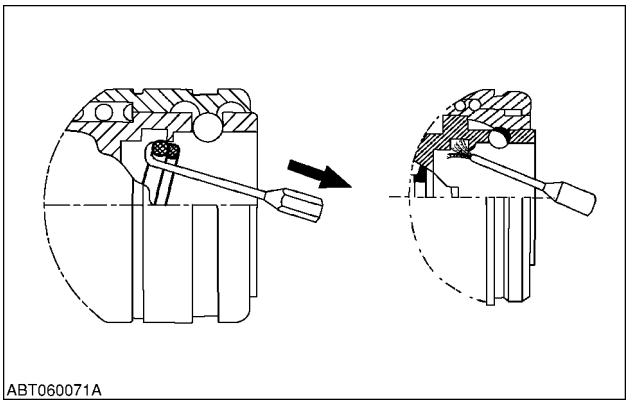

BAIL06CCM206ASA 1

2. Install the new back up ring ensuring that it is fully seated in the groove.

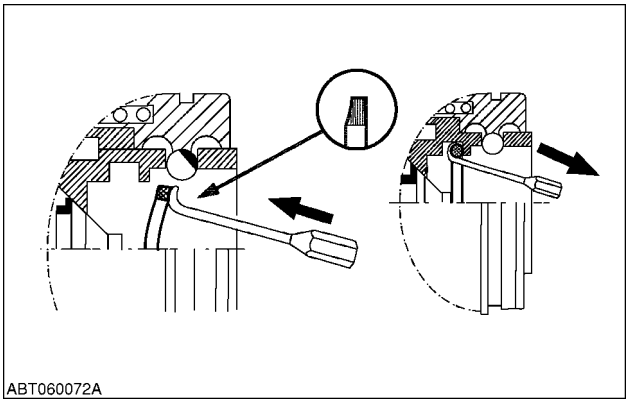

BAIL06CCM207ASA 2

3. Lubricate the new 'O' ring with clean transmission oil and insert into the groove.

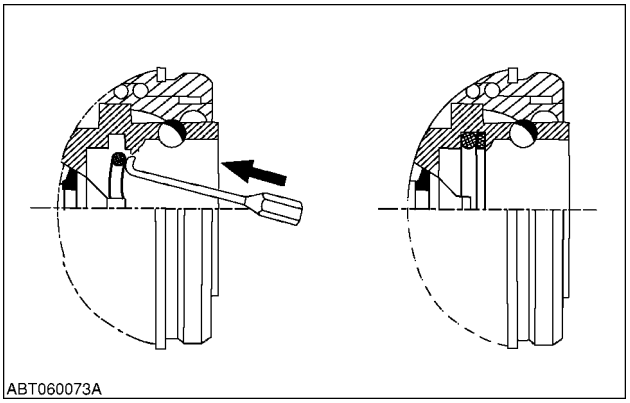

BAIL06CCM208ASA 3

https://tractormanualz.com/

Mid-mount remote control valve - Remove

1. Disconnect the negative cable **(1)** from the battery and insulate. Refer to **Battery - Disconnect (A.30.A)**

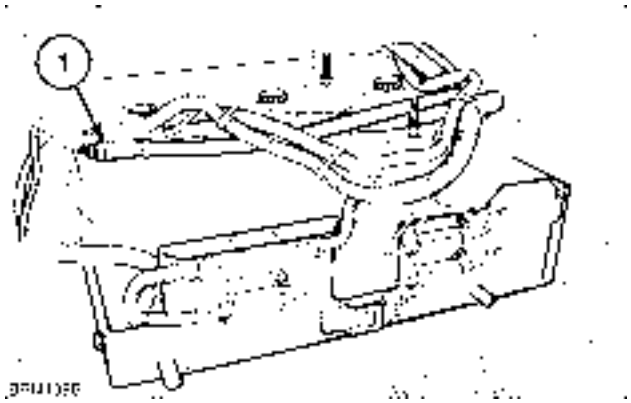

BAIL06CCM151ASA 1

2. Disconnect the mid mount valve pilot return hose **(1)**, return hose **(2)**and supply hose **(3)** .

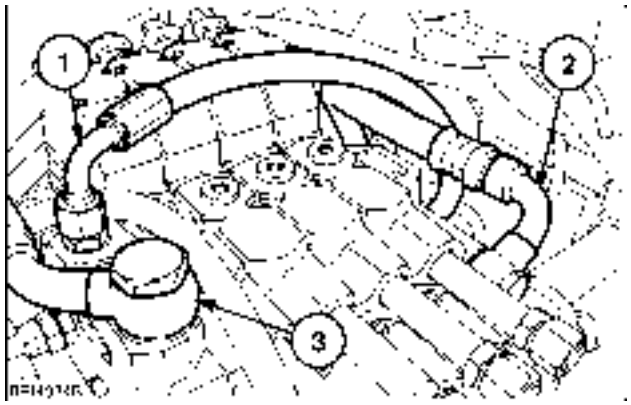

BAIL06CCM061ASA 2

3. Disconnect the pilot line pressure hose **(1)** and the load sensing hose **(2)**

NOTE: *Drain all hoses into a suitable receptacle*

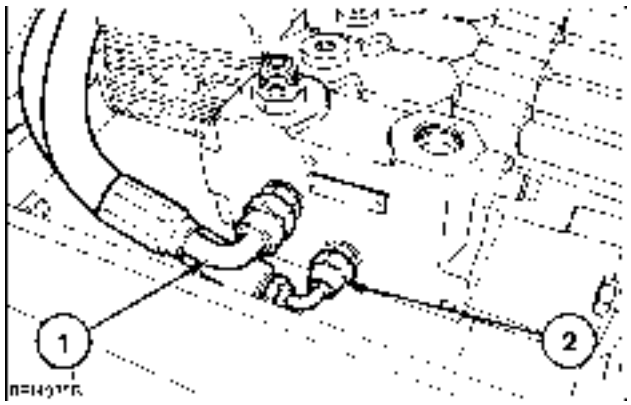

BAIL06CCM062ASA 3

4. Disconnect the electrical connectors **(1)** .

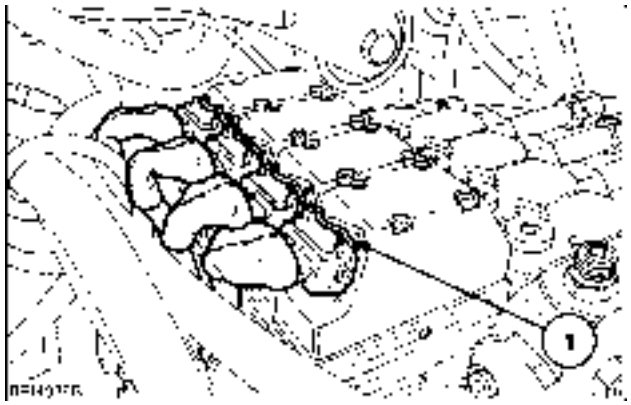

BAIL06CCM063ASA 4

https://tractormanualz.com/

5. Undo the mid mount valve stack retaining bolts. **(1)** . Remove valve stack from support.

⚠ WARNING ⚠

The remote valve assembly is heavy and must be removed under the complete control of the technician to prevent bodily injury.

M484

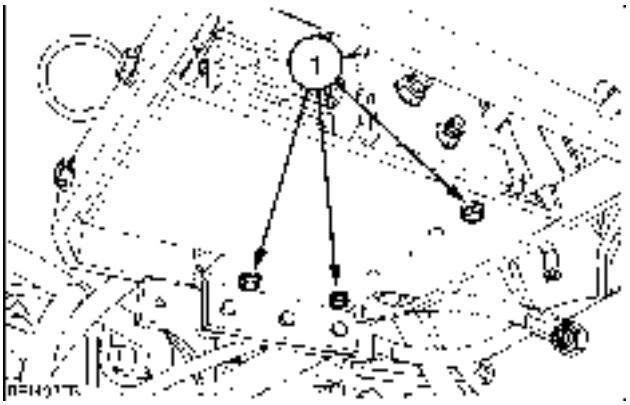

BAIL06CCM064ASA 5

Next operation:
Mid-mount remote control valve - Disassemble (A.10.C)

https://tractormanualz.com/

Mid-mount remote control valve - Disassemble

Prior operation:
Mid-mount remote control valve - Remove (A.10.C)

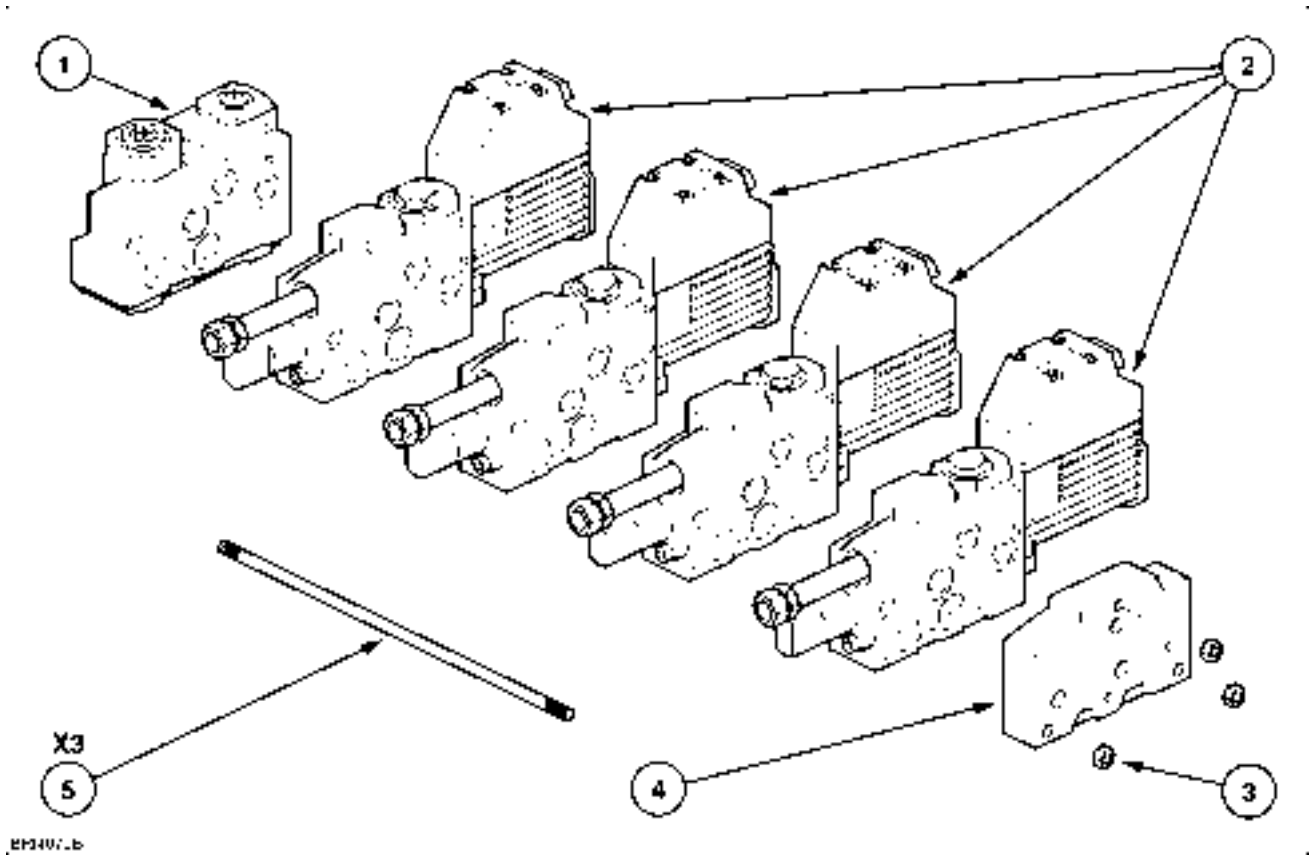

BAIL06CCM092FSA 1

1. Inlet Manifold
2. Electronic Remote Valves
3. Tie Rod Nuts
4. End Plate
5. Tie Rod

1. Loosen and remove the tie rod nuts **(3)** from the end plate **(4)** .
2. Remove the end plate .
3. Remove the remote valve slices **(2)** taking care not to dislodge the load sensing valves and 'O' rings seated in the valve face.
4. Unscrew the tie rod bolts from inlet manifold
5. Refer to **Mid-mount remote control valve - Exploded view (A.10.C)** to view valve components and **Mid-mount remote control valve - Assemble (A.10.C)** for reassembly.

https://tractormanualz.com/

Mid-mount remote control valve - Assemble

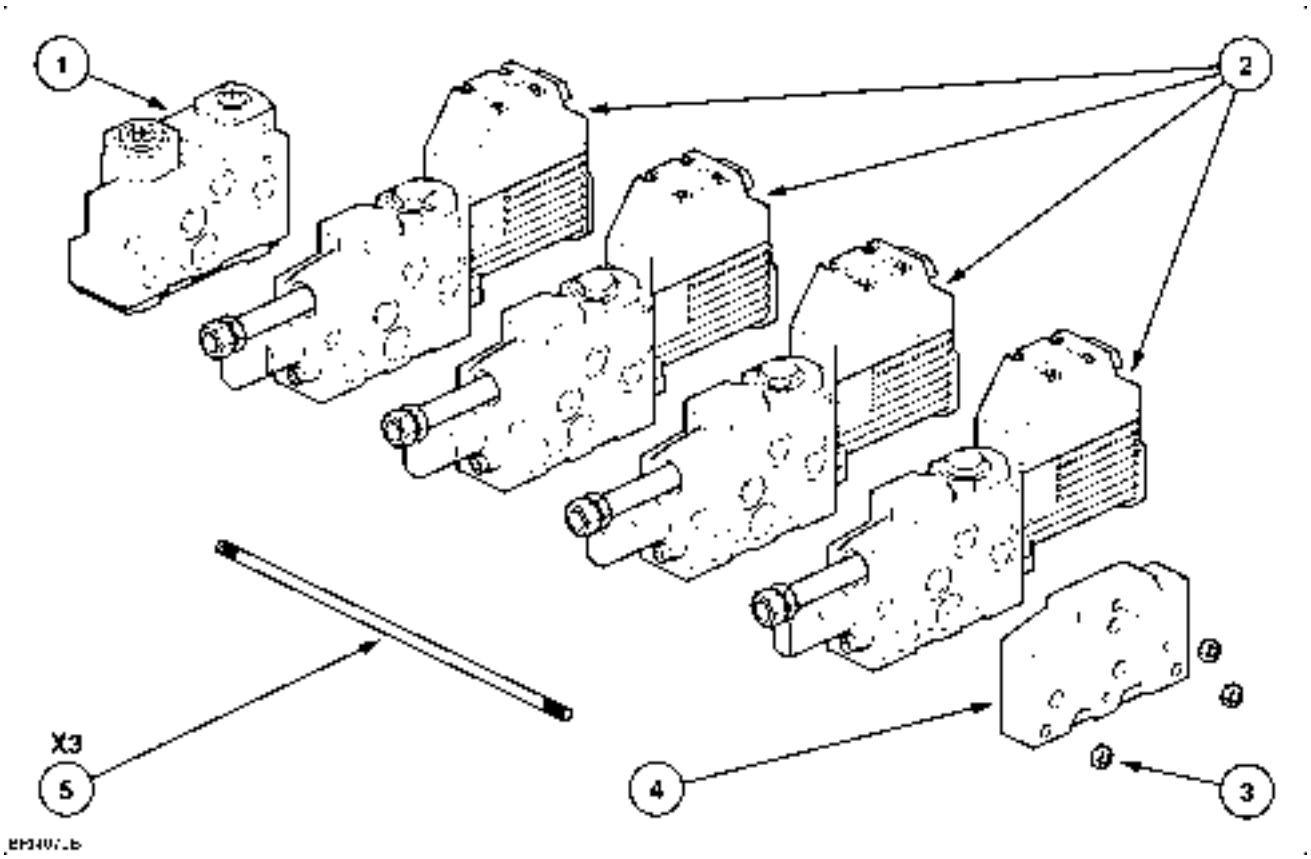

BAIL06CCM092FSA 1

1.Inlet Manifold
2.Electronic Remote Valves
3.Tie Rod Nuts
4.End Plate
5.Tie Rod

1. Insert the tie rods into the inlet manifold and screw in by hand as far as they will go.

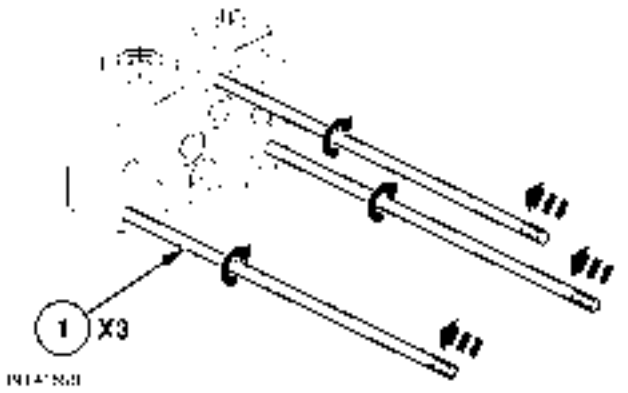

BAIL06CCM128ASA 2

https://tractormanualz.com/

2. Push a shim onto the tie rods if any adhesive shims have been used previously.

BAIL06CCM129ASA 3

3. Insert load sensing shuttle valve along with the 'O' ring and support ring as shown in Figure **4** in port 'Y'. Figure **5**

NOTE: *Clearance X should be approximately* ***0.5 mm*** *from the flange face of the valve segment to the top edge of the inserted shuttle valve.*

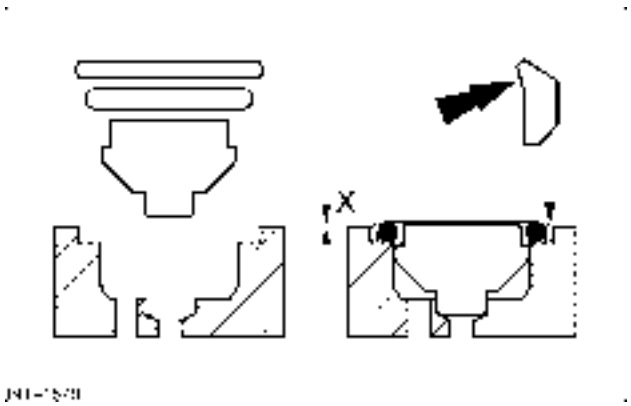

BAIL06CCM139ASA 4

4. Insert new 'O' Rings **(3)** into the pressure and return ports and also the load sense 'O Ring and support ring **(4)**.

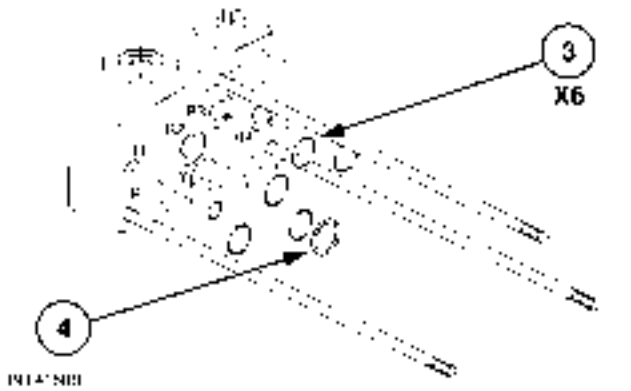

BAIL06CCM131ASA 5

5. Insert new 'O' Rings **(5)** into pilot line oil holes

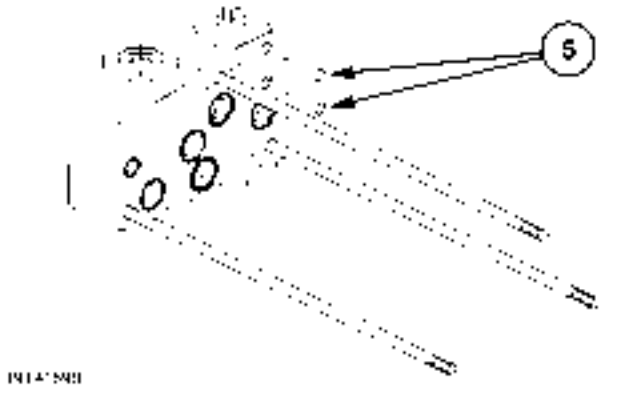

BAIL06CCM132ASA 6

https://tractormanualz.com/

6. Place the first valve slice onto the tie rods and insert new 'O' rings **(6)** into the relevant ports.

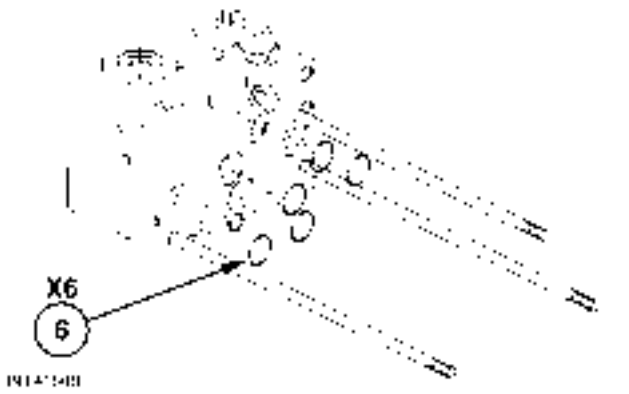

BAILCCM133ASA 7

7. If the flange face has corrugations that have been smoothed with a dressing stone, one spacer **(7)** must be threaded onto each tie rod. Insert the load sense valve **(8)** and support ring as shown.

NOTE: *Clearance X should be approximately* ***0.5 mm*** *from the flange face of the valve segment to the top edge of the inserted shuttle valve.*

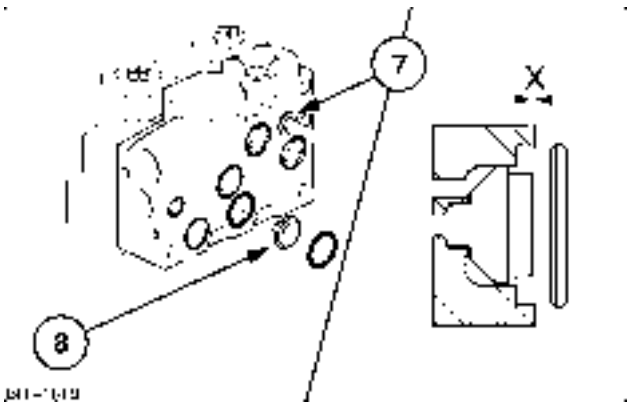

BAIL06CCM134ASA 8

8. Insert the 'O' rings **(9)** into the control oil holes.

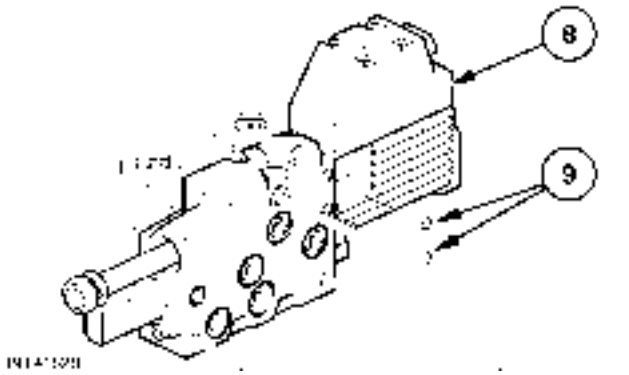

BAIL06CCM135ASA 9

9. Push the last slice **(10)** onto the tie rods and insert the 'O' rings.

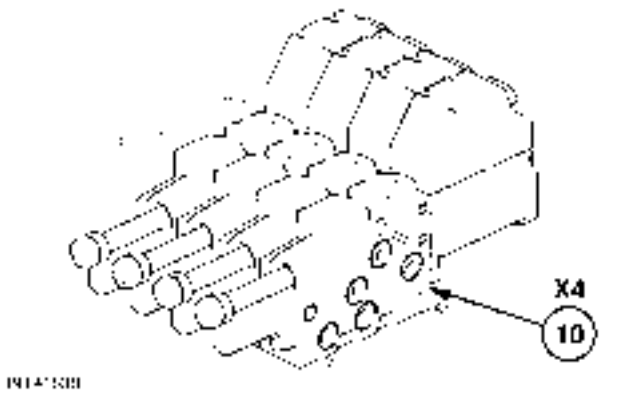

BAIL06CCM136ASA 10

https://tractormanualz.com/

10. Fit the end plate **(12)**.

BAIL06CCM138ASA 11

11. Push the end plate onto the tie rods and screw on the nuts **(13)** by hand

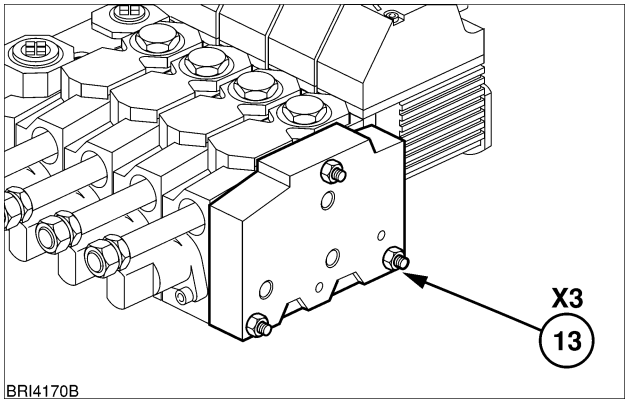

BAIL06CCM140ASA 12

12. Place the now assembled valve stack onto a level surface to correctly align the sections.
13. Tighten the nuts in the specified order and to the correct torque. See figure **13**

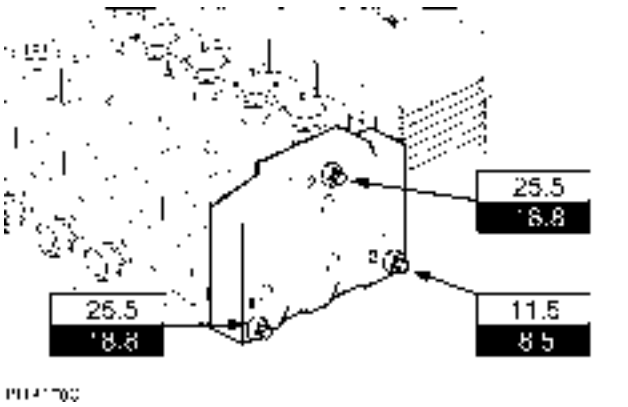

BAIL06CCM141ASA 13

Next operation:
Mid-mount remote control valve - Install (A.10.C)

https://tractormanualz.com/

Mid-mount remote control valve - Install

Prior operation:
Mid-mount remote control valve - Remove (A.10.C) Mid-mount remote control valve - Disassemble (A.10.C)

1. Place the remote valve assembly onto the support.

⚠ WARNING ⚠
The valve stack is very heavy DO NOT attempt to install without the use of lifting equipment.

B037

2. Tighten retaining bolts **(1)** to **24 Nm 18 Foot pounds**.

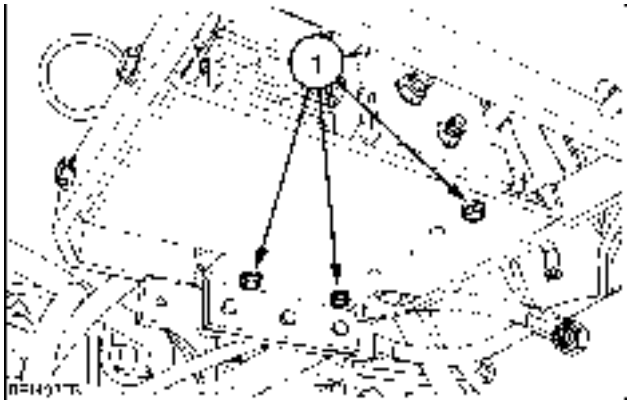

BAIL06CCM064ASA 1

3. Connect the harness connectors **(1)** to the remote valve solenoids.

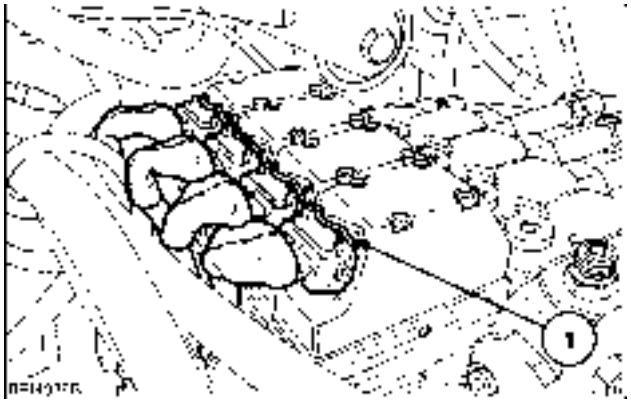

BAIL06CCM063ASA 2

4. Reconnect hoses as shown in **Mid-mount remote control valve - Static description (A.10.C)** Figure 1. .
5. If a new valve slice has been replaced or added it will be necessary to reprogram the number of the valves within the valve assembly. See **Control module - Configure (A.50.A)** ..

https://tractormanualz.com/

Stack valve - Remove

Prior operation:
Battery - Disconnect (A.30.A)

1. Remove the pneumatic trailer brake valve bracket assembly

NOTE: *The top right hand side retaining nuts are also the remote valve slice retaining nuts . Ensure these nuts are relocated on the valve assembly and retightened.*

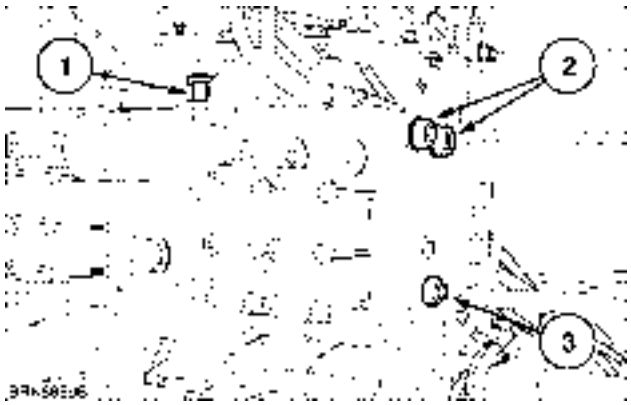

BAIL08CVT054ASA 1

2. Undo the return to tank pipe **(1)** from the top of the valve assembly and the load sensing hose **(2)** and main pressure feed hose **(3)** from the rear of the stack.

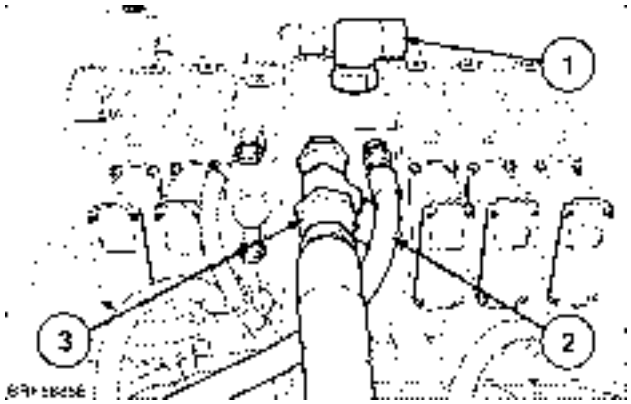

BAIL08CVT076ASA 2

3. Remove the pilot supply pipe **(1)** and the hydraulic lift pipe from **(2)** the EDC valve slice.

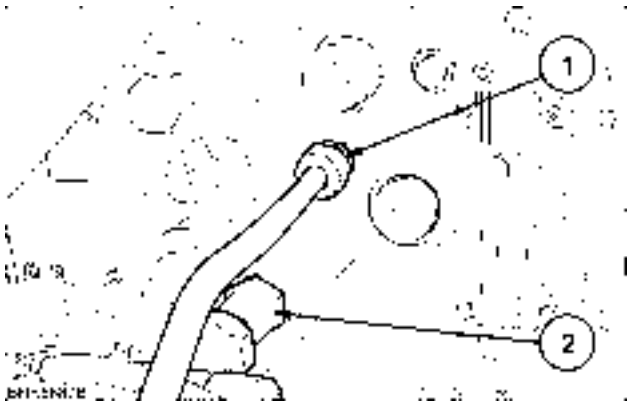

BAIL08CVT078ASA 3

4. Remove connectors **(1)** from EDC solenoids.

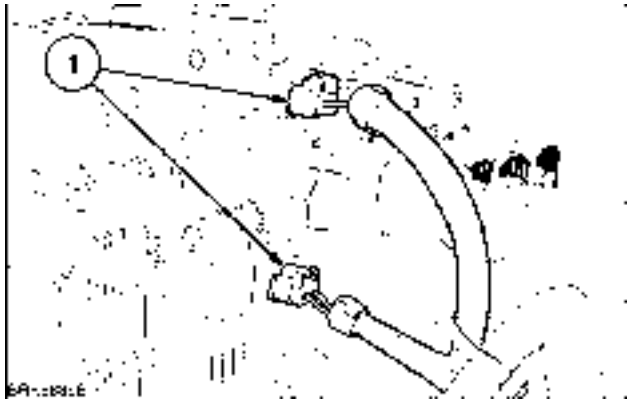

BAIL08CVT077ASA 4

https://tractormanualz.com/

5. Disconnect the electrical connectors **(1)** from the remote valve solenoids.

BAIL08CVT079ASA 5

6. Undo and remove the rear retaining nuts **(1)** at the base of the remote valve manifold.

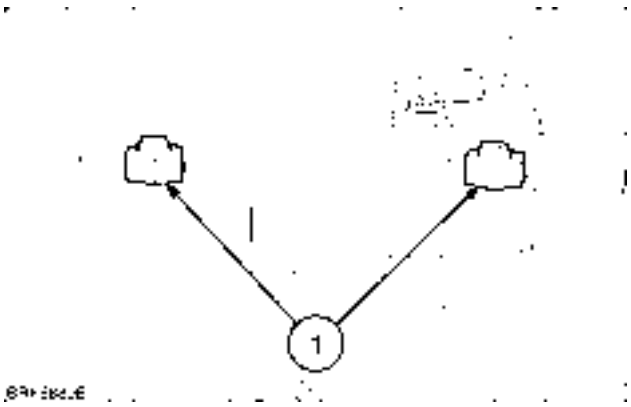

BAIL08CVT080ASA 6

7. Undo and remove the retaining bolts **(1)** at the front of the manifold. There is a slot where the right hand bolt is mounted to allow easier removal of the bolt due to the proximity of the EDC valve pipe.

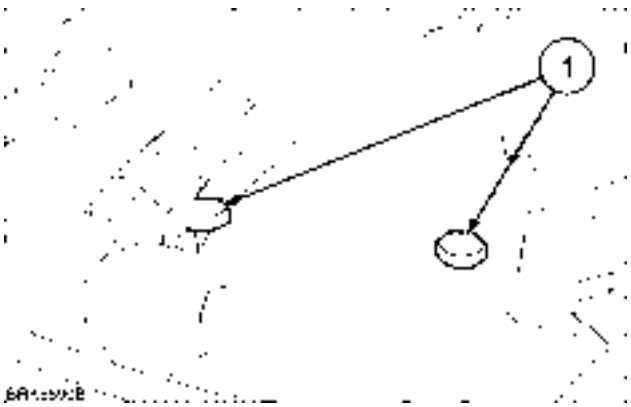

BAIL08CVT081ASA 7

8. Using a suitable hoist and supports, lift the remote valve stack **(1)** clear of the rear axle housing. Place on a suitable support.

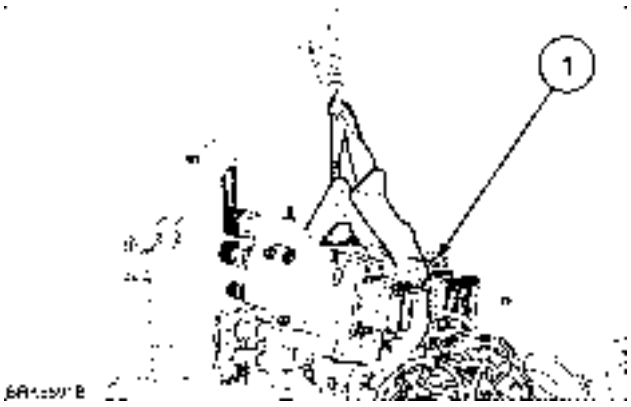

BAIL08CVT082ASA 8

https://tractormanualz.com/

Stack valve - Install

1. Using a suitable hoist locate the valve stack assembly **(1)** on to the rear axle housing.

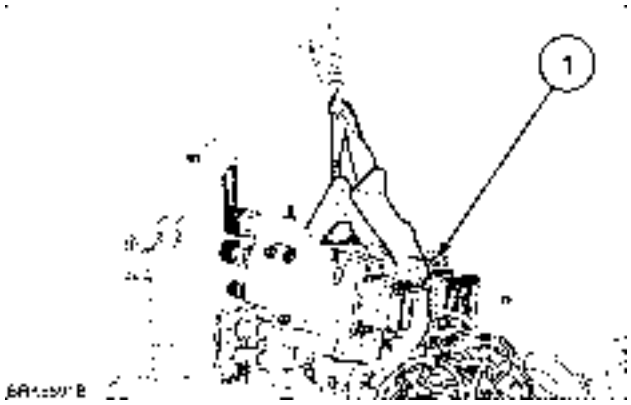

BAIL08CVT082ASA 1

2. Insert and tighten the retaining bolts **(1)** at the front of the manifold to **43 Nm** (**31.7 lb ft**).

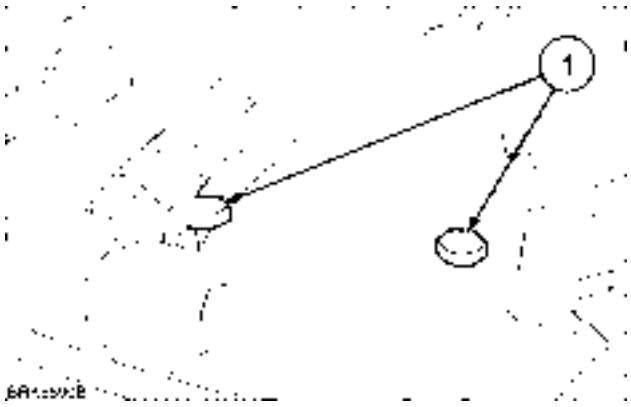

BAIL08CVT081ASA 2

3. Locate the retaining nuts at the rear of the manifold and tighten to **43 Nm** (**31.7 lb ft**).

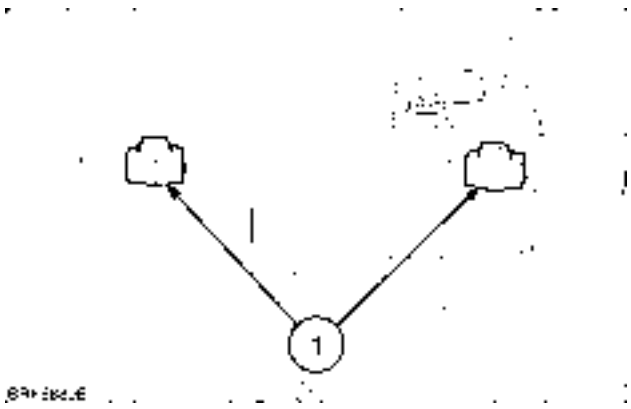

BAIL08CVT080ASA 3

4. Connect the electrical connectors **(1)** to the remote valve solenoids.

BAIL08CVT079ASA 4

https://tractormanualz.com/

5. Connect the wiring harness connectors **(1)** to the EDC solenoids.

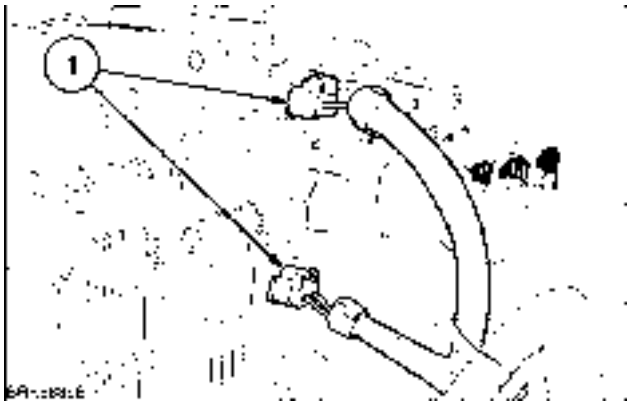

BAIL08CVT077ASA 5

6. Install the pilot supply pipe **(1)** and the EDC hydraulic lift pipe **(2)**.

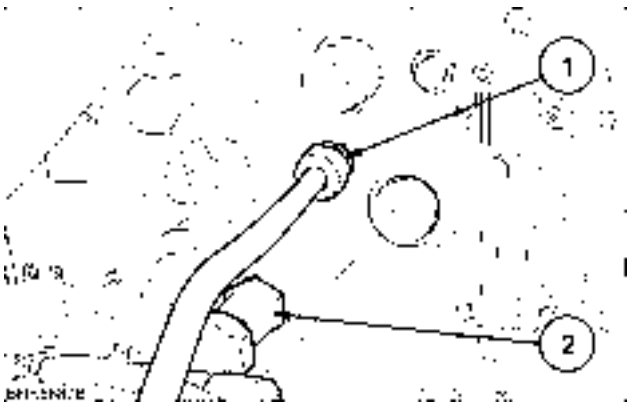

BAIL08CVT078ASA 6

7. Install the return to tank pipe connector **(1)** (if removed). Install the load sensing hose **(2)** and the main pressure feed hose **(3)**.

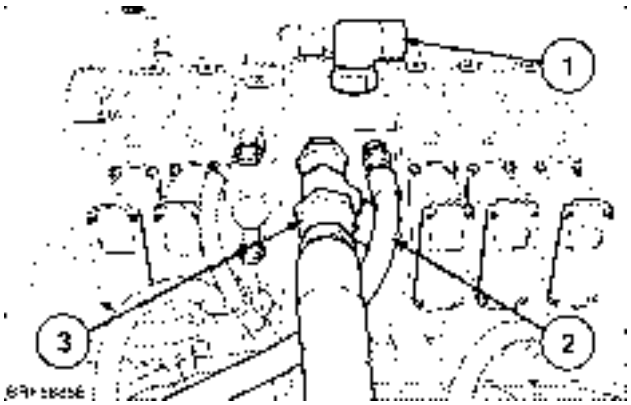

BAIL08CVT076ASA 7

8. Connect the return pipe **(1)**.

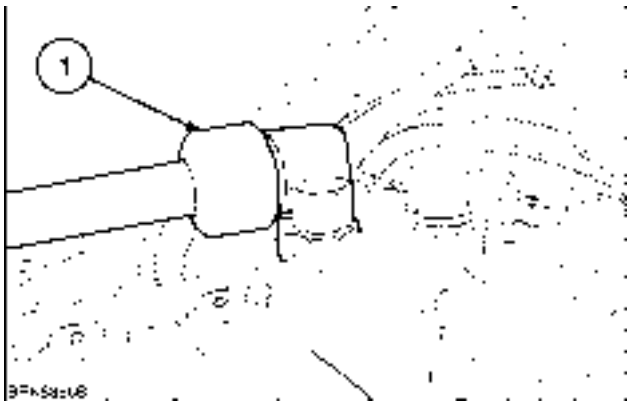

BAIL08CVT061ASA 8

https://tractormanualz.com/

9. Install the pneumatic valve bracket to the valve assembly and tighten the top retaining bolt **(1)** to **85 Nm** (**62.7 lb ft**) and nuts **(2)** and **(3)** to **45 Nm** (**33.2 lb ft**).

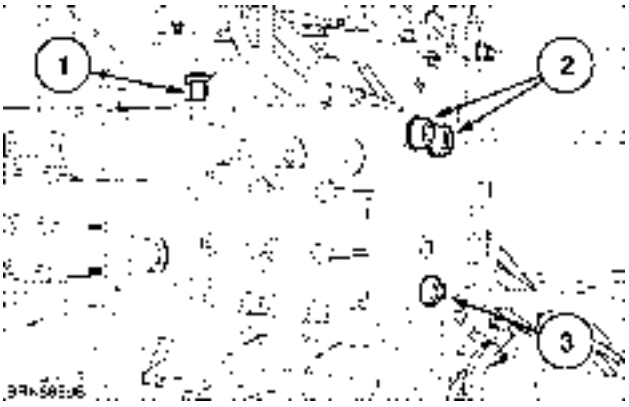

BAIL08CVT054ASA 9

https://tractormanualz.com/

Index

DISTRIBUTION SYSTEMS - A

PRIMARY HYDRAULIC POWER SYSTEM Electro-hydraulic remote valve - 10.C

Coupler - Overhaul 28
Mid-mount remote control valve - Assemble 32
Mid-mount remote control valve - Disassemble 31
Mid-mount remote control valve - Exploded view 13
Mid-mount remote control valve - Install 36
Mid-mount remote control valve - Remove 29
Mid-mount remote control valve - Static description 14
Mid-mount remote control valve - Torque 5
PRIMARY HYDRAULIC POWER SYSTEM Electro-hydraulic remote valve - Calibrate 25
PRIMARY HYDRAULIC POWER SYSTEM Electro-hydraulic remote valve - Disassemble 24
PRIMARY HYDRAULIC POWER SYSTEM Electro-hydraulic remote valve - Exploded view 12
PRIMARY HYDRAULIC POWER SYSTEM Electro-hydraulic remote valve - Hydraulic schema 6
PRIMARY HYDRAULIC POWER SYSTEM Electro-hydraulic remote valve - Install 21
PRIMARY HYDRAULIC POWER SYSTEM Electro-hydraulic remote valve - Remove 19
PRIMARY HYDRAULIC POWER SYSTEM Electro-hydraulic remote valve - Sectional view 11
PRIMARY HYDRAULIC POWER SYSTEM Electro-hydraulic remote valve - Static description 7
PRIMARY HYDRAULIC POWER SYSTEM Electro-hydraulic remote valve - Torque 3
Remote control valve - Torque 4
Stack valve - Install 39
Stack valve - Remove 37

https://tractormanualz.com/

DISTRIBUTION SYSTEMS - A

SECONDARY HYDRAULIC POWER SYSTEM - 12.A

Puma 165 CVX
Puma 180 CVX
Puma 195 CVX
Puma 210 CVX
Puma 225 CVX

https://tractormanualz.com/

Contents

DISTRIBUTION SYSTEMS - A

SECONDARY HYDRAULIC POWER SYSTEM - 12.A

TECHNICAL DATA
Hydraulic pump
General specification Vane pump 3

FUNCTIONAL DATA
Hydraulic pump
Exploded view 4
Dynamic description Vane Pump 6
Static description Vane pump 9
Valve block
Static description 12

SERVICE
Hydraulic pump
Remove Vane Pump 13
Install Vane Pump 15
Disassemble Vane Pump 16

https://tractormanualz.com/

Hydraulic pump - General specification Vane pump

Type	Vane pump
Output @ engine speed **2200 RPM**	**60 l/min** (**15.9 US gpm**)
Pressure filter relief valve	**28 bar** (**406.0 psi**)
Low pressure regulated	**22 - 25 bar** (**319.0 - 362.5 psi**)
Over pressure switch closes	**27 bar** (**391.5 psi**)

https://tractormanualz.com/

Hydraulic pump - Exploded view

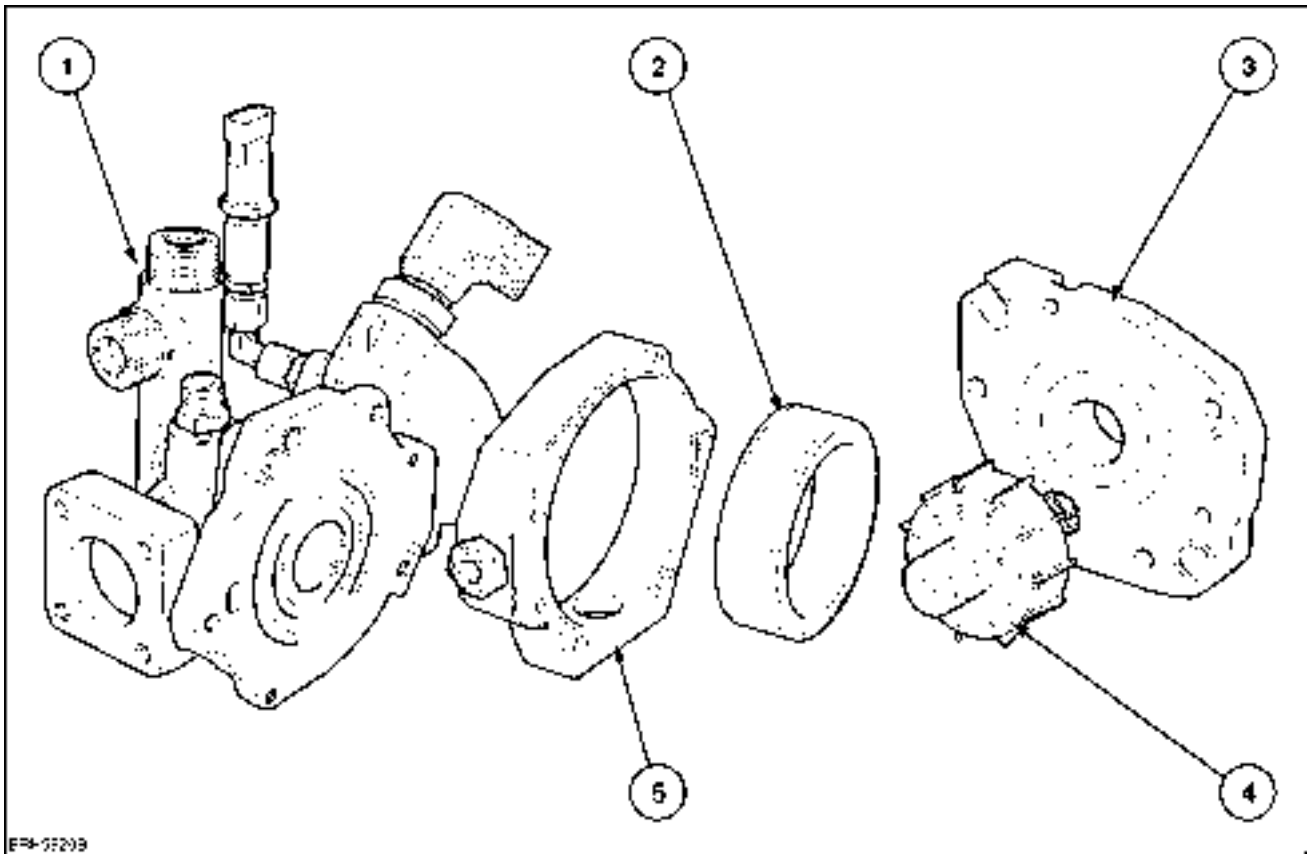

BAIL08CVT089FSA 1

Vane pump components

1. Valve body
2. Stator ring
3. Retaining plate
4. Rotor and vanes
5. Housing

https://tractormanualz.com/

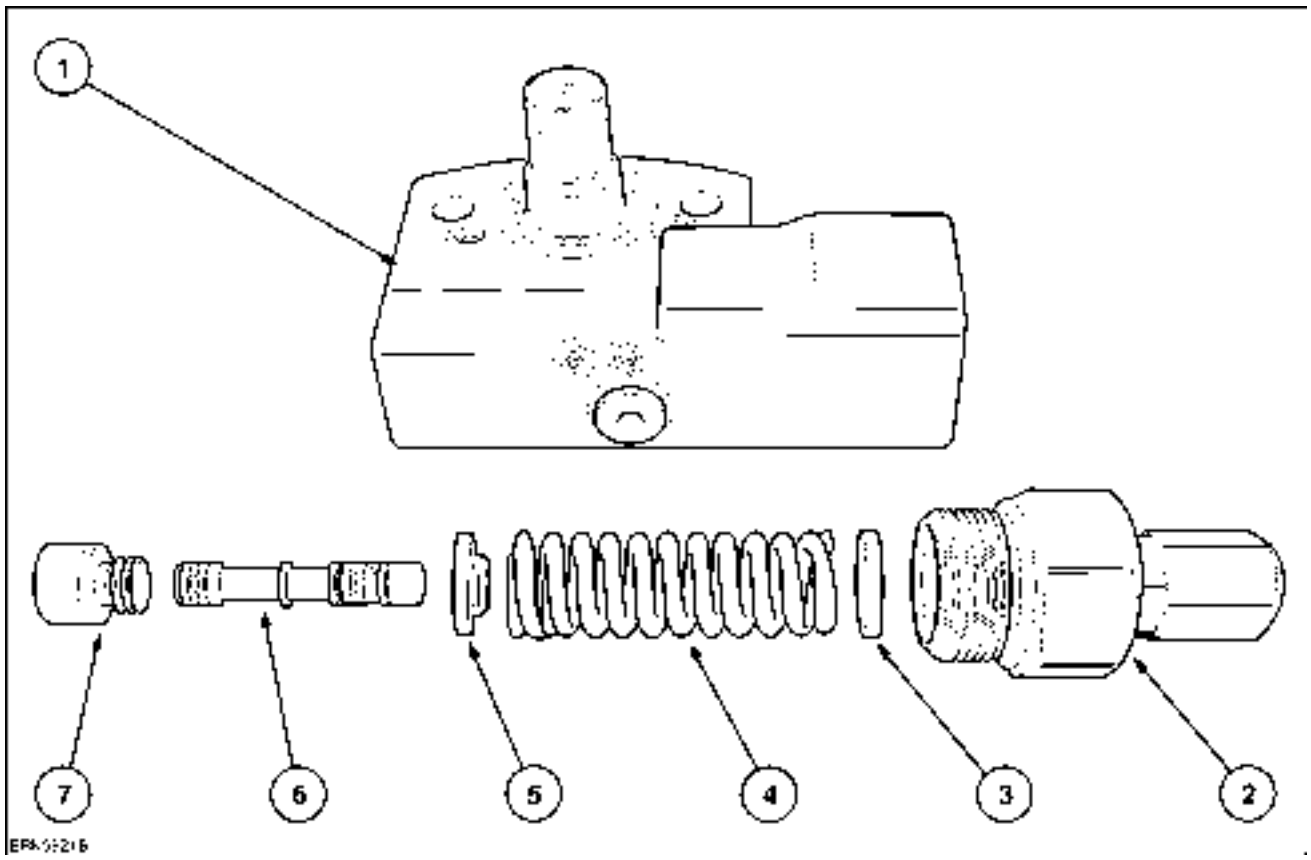

BAIL08CVT090ASA 2

Pressure controller components

1.Pressure controller manifold
2.Pressure controller adjuster
3.Retainer
4.Spring
5.Retainer
6.Control spool
7.Plug

https://tractormanualz.com/

Hydraulic pump - Dynamic description Vane Pump

The vane pump is directly driven by an intermediate gear connected to the PTO shaft.
The pump comprises of the following components (Refer to **Hydraulic pump - Exploded view (A.12.A)** :
Housing
End plate
Rotor
Vanes
Stator ring
Control valve and stroking piston
Filter

Prestart

The stator ring is held in the full demand position by the stroking piston spring. This ensures that pumping occurs immediately at start up.
The control valve is also held in the full demand position by the pressure control spring.

Start up

Refer to figure **2**.

1. The engine is cranked and the PTO shaft and pump drive begin to rotate. All three pumps (charge gear, variable piston and variable vane) turn on the shaft.
2. Although the vane pump rotor turns it will not pump until the vanes are fully extended against the stator ring.
3. Pressure increases from the charge pump via the 'V' port and the pump gallery, and this pressure acts upon the back of the vanes forcing them outwards.
4. From the suction gallery to the bottom of the pump rotor the pumping volume increases and oil is drawn into the pumping chambers. At this position the 'V' gallery also ends and the vanes are now fed from the output pressure gallery 'Pv'.
5. From the bottom of the pump to the top, the pumping volume decreases and the oil exits the gallery through port 'P'.
6. From the main output of the pump, oil is delivered through the pressure filter to the low pressure circuits. Prior to the filter is a filter/system protection valve. After the filter, oil pressure is also fed via the control valve to the stroking piston to assist the spring on the stator ring.

Pump on demand

When "on demand", the pressure being created by the pump output flow is diverted to the control valve. The oil pressure passes through the control valve and on to the stroking piston. This assists the stroking spring to keep the pump on full demand/flow.

https://tractormanualz.com/

Pressure variations within the pumping chamber.

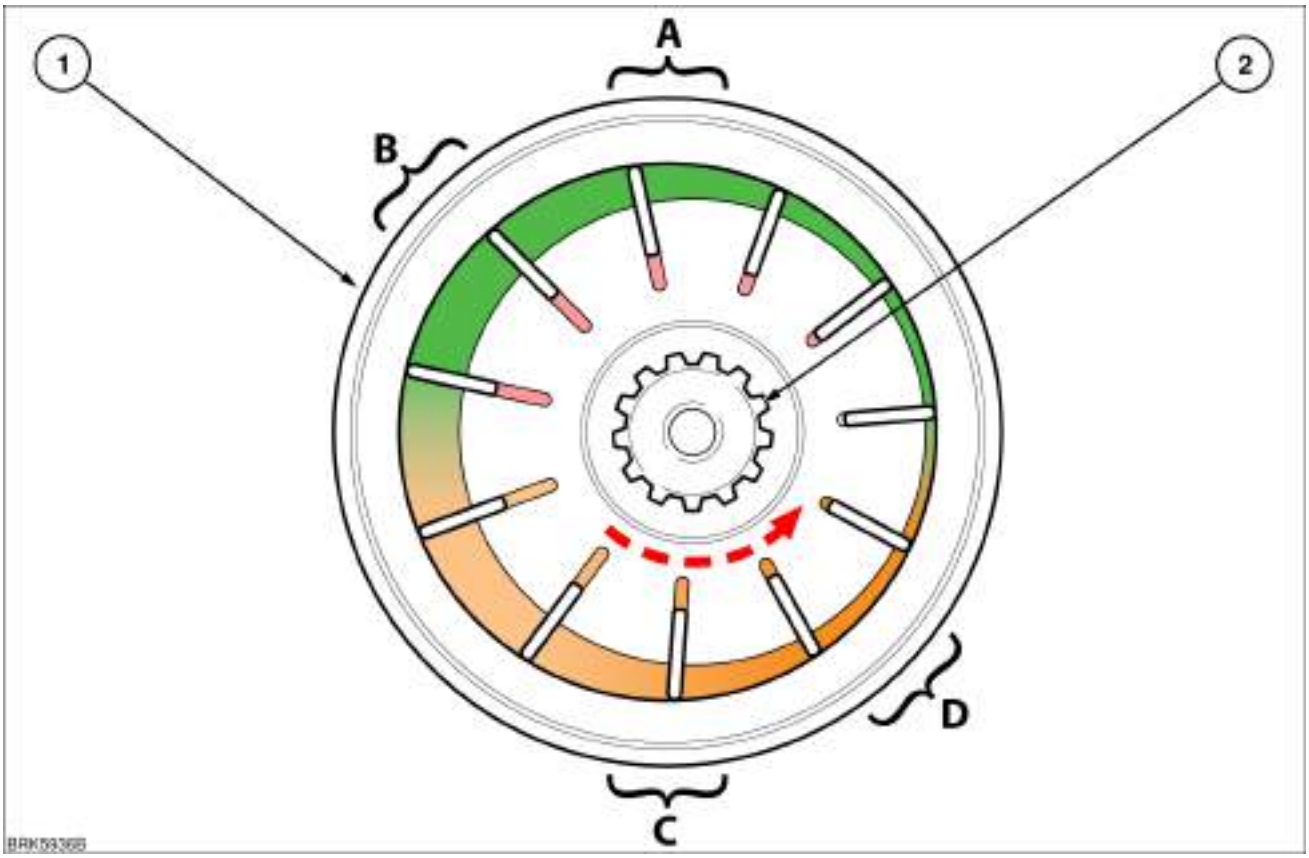

BAIL08CVT100FSA 1

	Suction	1.Stator ring
	Low Pressure.	2.Rotor driveshaft
	Control Pressure	

The rotor is on a fixed axis and continually rotates if the engine is operating. The stator ring has a linear movement from top to bottom.
During pumping the pressure at **(C)** compared to **(A)** and also **(D)** compared to **(B)** is higher therefore the stator ring will be forced right and down against the thrust pin and piston, destroking the pump.

As the output pressure increases then so does the stroking pressure to a point where the control valve spring is overcome. This becomes the regulated pressure.

Pump off demand

As the pump delivers flow and self strokes to "On demand", the pressure continues to increase to the point where regulated pressure is reached. This point is determined by the spring rate of the control valve spring acting on the control valve spool.
When regulated pressure is reached, the spool moves towards the spring, and restricts the flow being delivered to the stroking piston also allowing the oil in this part of the circuit to be vented to the suction side of the pump (Refer to figure **1** and schematic Figure **2**).

Pump regulating

The pump is self regulating and fluctuates between ’on’ demand and ’off’ demand to deliver flow and a constant regulated pressure.

https://tractormanualz.com/

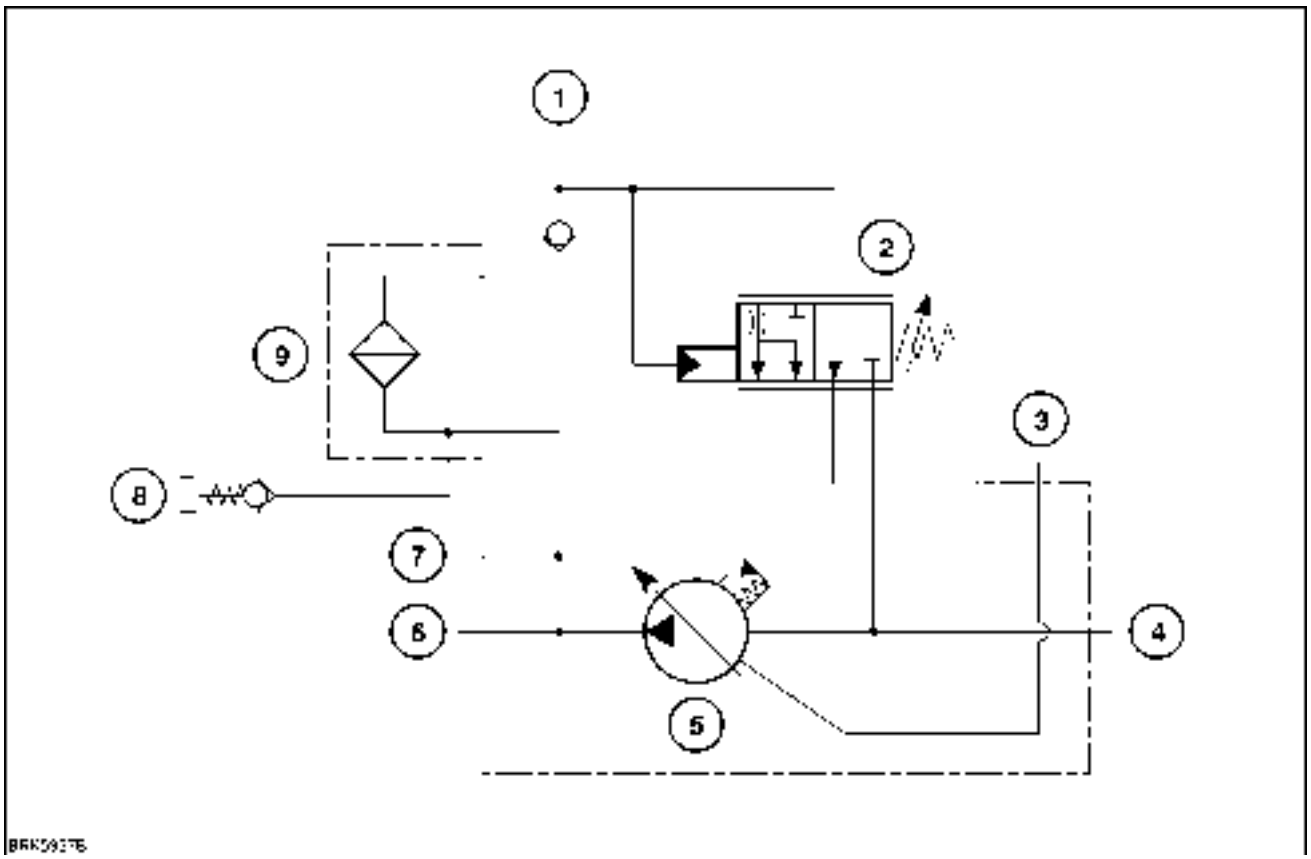

BAIL08CVT120FSA 2

Vane pump schematic

1. **(P)** Pressure port
2. Control spool
3. **(Pv)** Pressure vane
4. Return to tank
5. Vane pump
6. Suction
7. **(V)** port - Charge boost pressure
8. **28 bar** (**406.0 psi**) Filter relief valve
9. Filter

https://tractormanualz.com/

Hydraulic pump - Static description Vane pump

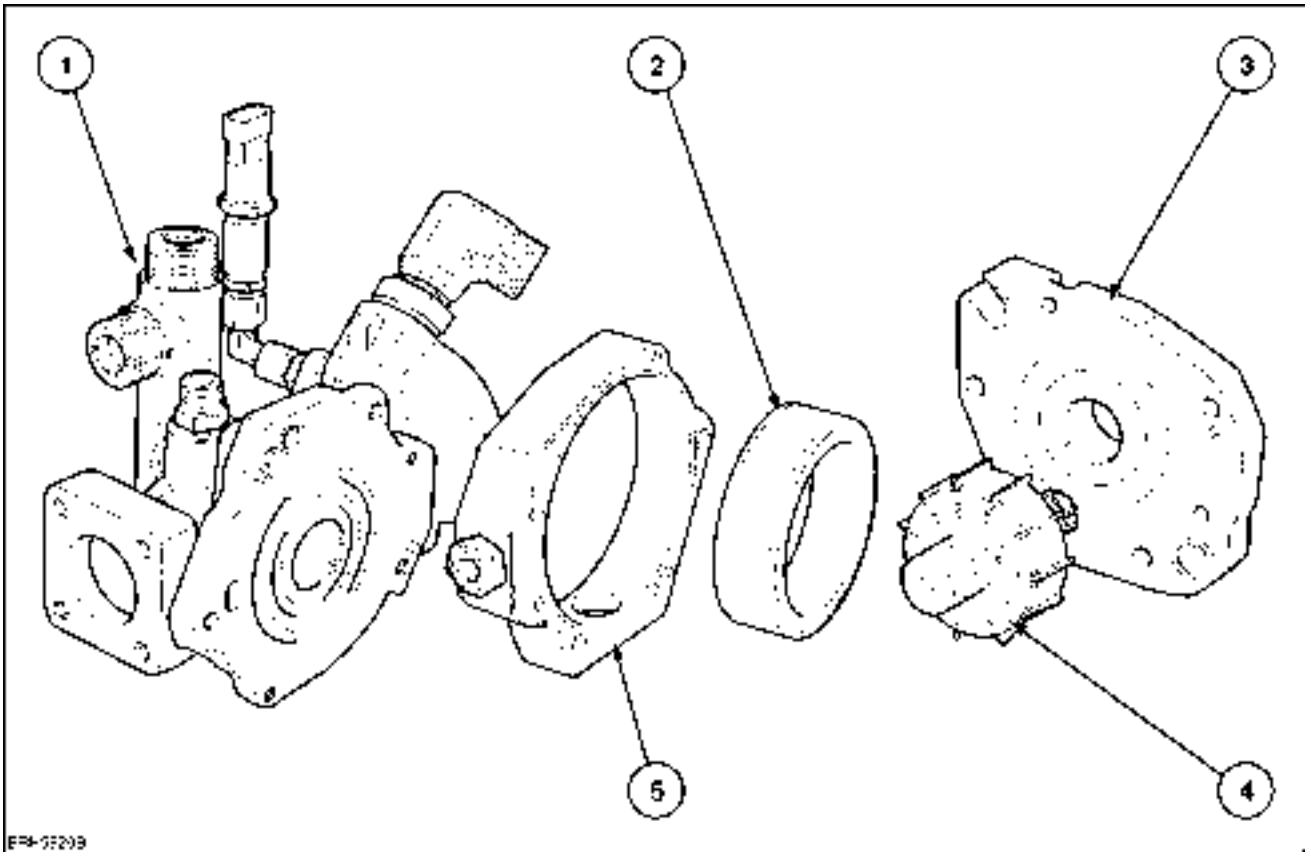

BAIL08CVT089FSA 1

Valve body components

1. Pump body
2. Stator ring
3. Retaining plate
4. Rotor and vanes
5. Housing

The Vane pump is located on the right hand side of the rear axle housing and supplies low pressure oil to the following components:
Rear Power Take Off (PTO) and brake
Differential Lock
Front Wheel Drive engagement
Transmission Synchronisers
Transmission clutches
Servo Assisted Master cylinder
Remote Valve pilot pressure
Hydro replenishing and cooling.
Refer to **PRIMARY HYDRAULIC POWER SYSTEM - Hydraulic schema (A.10.A)**

The pump is driven from the PTO drive shaft **(1)** via an idler gear **(2)** and pump drive gear **(3)**.

https://tractormanualz.com/

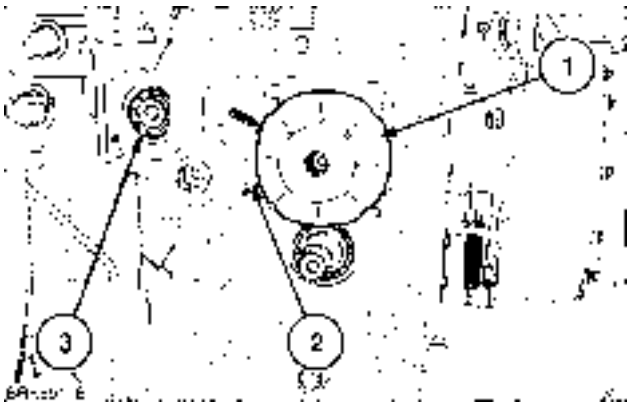

BAIL08CVT098ASA 2

https://tractormanualz.com/

The vane pump assembly consists of six main component parts.

- Pump body
- Rotor and vanes
- Rotor or Stator ring
- Control valve and stroking piston (refer to **Hydraulic pump - Exploded view (A.12.A)**)
- Filter

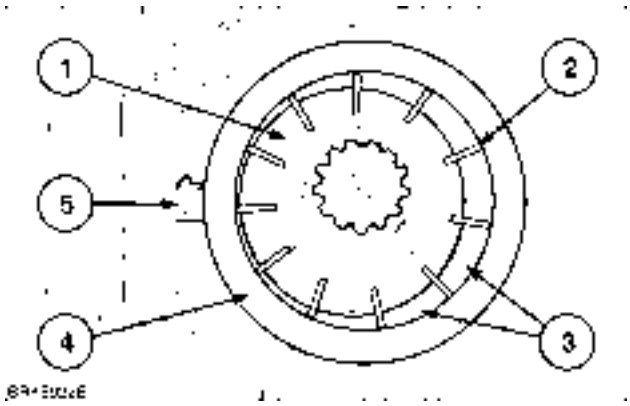

BAIL08CVT099ASA 3

1. Rotor
2. Vane
3. Pump chamber
4. Stator ring
5. Stroking piston

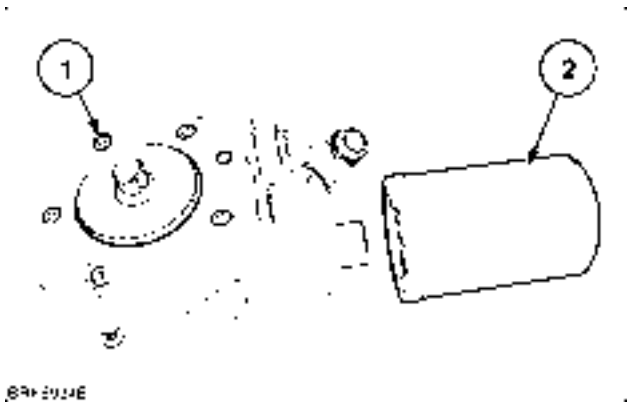

BAIL08CVT093ASA 4

1. Pump assembly
2. Filter

https://tractormanualz.com/

Valve block - Static description

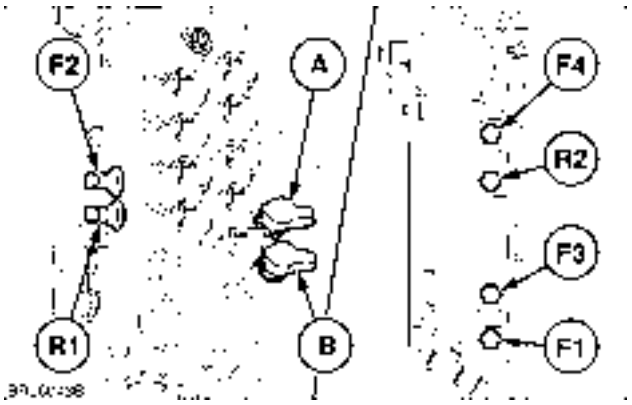

BRL6043B 1

(A) Clutch test port
(B) Clutch test port
(F1) (F2) (F3) (F4) (R1) (R2) Synchroniser test ports

Refer to **PRIMARY HYDRAULIC POWER SYSTEM - Static description (A.10.A)**

https://tractormanualz.com/

Hydraulic pump - Remove Vane Pump

Prior operation:
Filter - Remove (A.10.A)

1. Remove pipe from charge pump **(1)** and pipe to sump **(2)**.

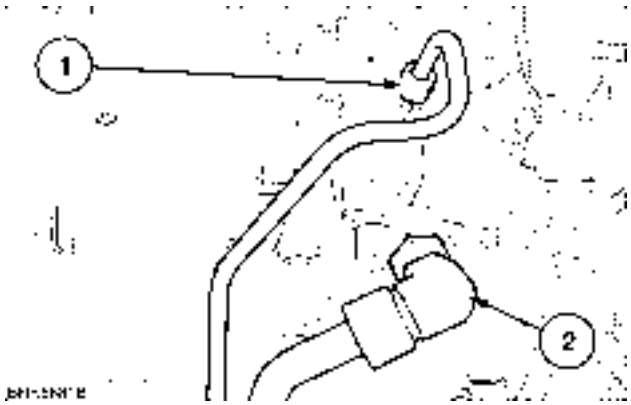

BAIL08CVT067ASA 1

2. Undo and remove the pump regulator screws **(1)** and remove pump regulator assembly from the pump.

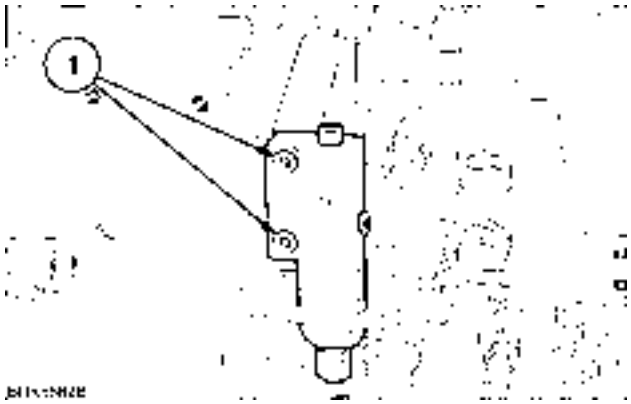

BAIL08CVT068ASA 2

3. Remove the lower retaining bolt **(1)**.

BAIL08CVT070ASA 3

4. Support the pump assembly and remove the upper bolt **(1)** from the pump and lift the pump from the rear axle housing.

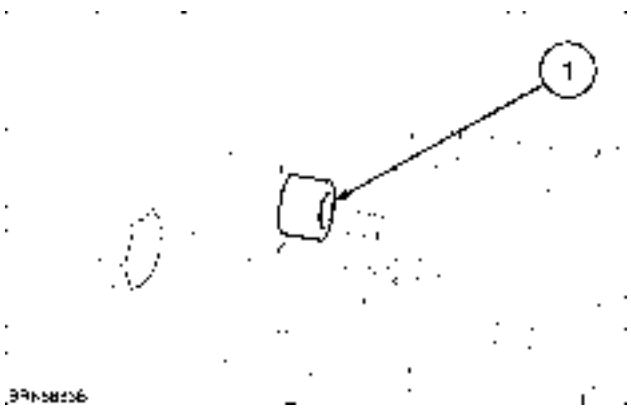

BAIL08CVT069ASA 4

https://tractormanualz.com/

⚠ WARNING ⚠

Lift and handle all heavy components using lifting equipment of appropriate lifting capacity. Make sure that units or parts are supported by suitable slings or hooks. Make sure that no-one is in the vicinity of the load to be lifted. Failure to comply could result in serious injury or death.

B012

https://tractormanualz.com/

Hydraulic pump - Install Vane Pump

1. Support the pump assembly on the rear axle housing and locate the top retaining bolt **(1)** in the in the housing.

⚠ WARNING ⚠

Lift and handle all heavy components using lifting equipment of appropriate lifting capacity. Make sure that units or parts are supported by suitable slings or hooks. Make sure that no-one is in the vicinity of the load to be lifted. Failure to comply could result in serious injury or death.

B012

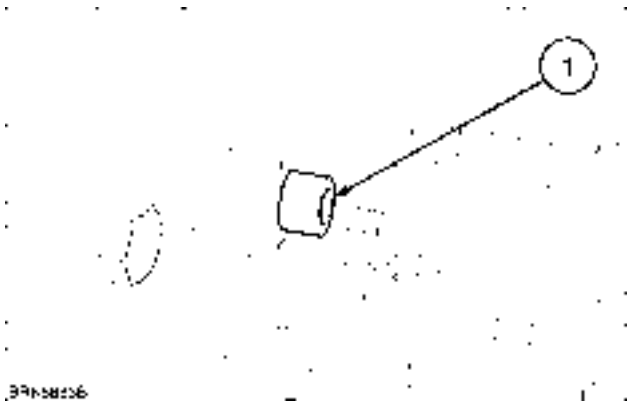

BAIL08CVT069ASA 1

2. Locate the lower retaining bolt **(1)** in the housing. Tighten to **60 Nm** (**44.3 lb ft**) .

BAIL08CVT070ASA 2

3. Attach the pipe from the rear axle sump **(2)** and the pipe to charge pump housing **(1)**.

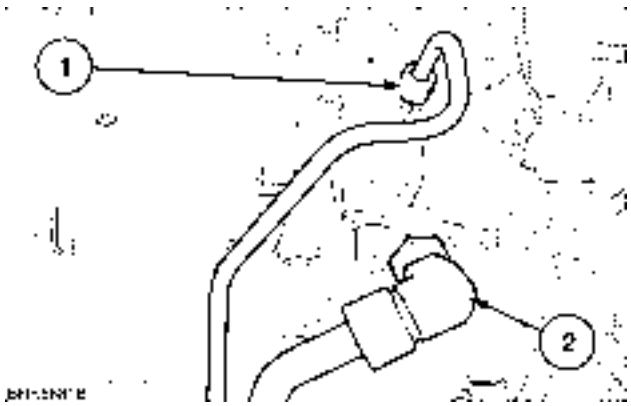

BAIL08CVT067ASA 3

https://tractormanualz.com/

Hydraulic pump - Disassemble Vane Pump

1. Remove the filter **(2)** using a suitable tool. Undo and remove the hexagon headed screws **(1)** from the pump housing . Separate the components and place on a clean surface. (Refer to **Hydraulic pump - Exploded view (A.12.A)**) .

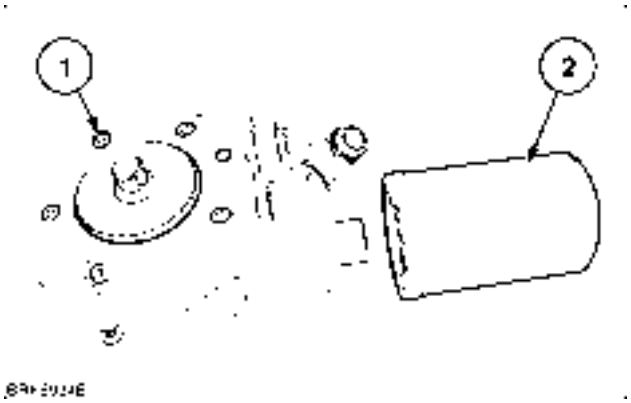

BAIL08CVT093ASA 1

2. Remove the filter mounting screw.

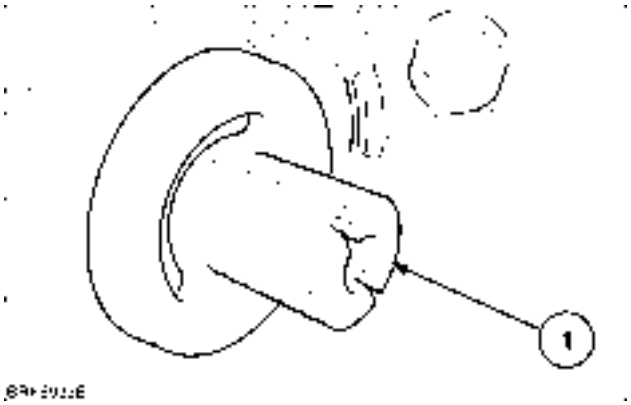

BAIL08CVT092ASA 2

3. Remove the retaining ring **(2)** and remove the regulator valve **(1)**.

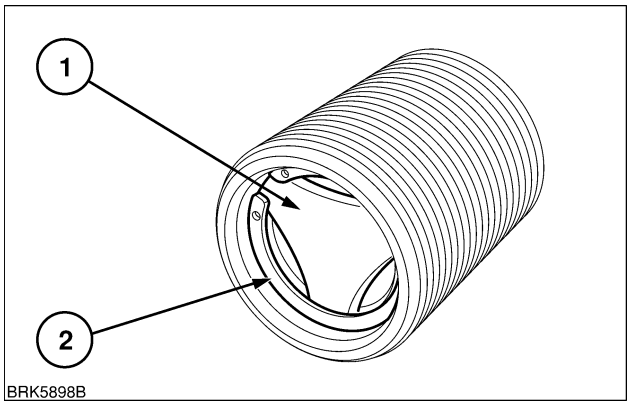

BAIL08CVT087ASA 3

4. Regulator valve **(1)**.
Filter screw **(2)**

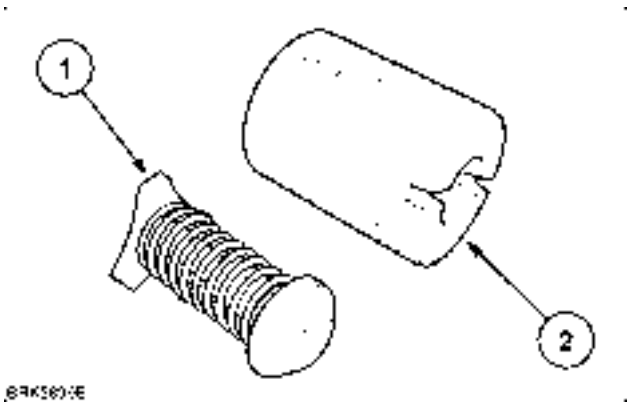

BAILO8CVT088ASA 4

https://tractormanualz.com/

Index

DISTRIBUTION SYSTEMS - A

SECONDARY HYDRAULIC POWER SYSTEM - 12.A

Hydraulic pump - Disassemble Vane Pump 16
Hydraulic pump - Dynamic description Vane Pump 6
Hydraulic pump - Exploded view 4
Hydraulic pump - General specification Vane pump 3
Hydraulic pump - Install Vane Pump 15
Hydraulic pump - Remove Vane Pump 13
Hydraulic pump - Static description Vane pump 9
Valve block - Static description 12

https://tractormanualz.com/

https://tractormanualz.com/

DISTRIBUTION SYSTEMS - A

HYDRAULIC COMMAND SYSTEM - 14.A

Puma 165 CVX
Puma 180 CVX
Puma 195 CVX
Puma 210 CVX
Puma 225 CVX

https://tractormanualz.com/

Contents

DISTRIBUTION SYSTEMS - A

HYDRAULIC COMMAND SYSTEM - 14.A

TECHNICAL DATA
- Priority valve
  - General specification 3
- Hydraulic pump
  - General specification Vane Pump 4

FUNCTIONAL DATA
- Priority valve
  - Exploded view 5
  - Hydraulic schema 6
  - Dynamic description 7

SERVICE
- Priority valve
  - Remove 13
  - Install 14
  - Disassemble 15

https://tractormanualz.com/

Priority valve - General specification

Maximum inlet flow at port P	**165 l/min** (**43.59 US gpm**)
Maximum Pressure at port P	**250 bar** (**3625.00 psi**)
Master priority working pressure	**5.8 - 11.6 bar** (**84.1 - 168.2 psi**)
Steering compensator working pressure	**12.8 - 17.4 bar** (**185.6 - 252.3 psi**)

https://tractormanualz.com/

Hydraulic pump - General specification Vane Pump

Maximum displacement	**45 cm³**
Direction of rotation (view on pump shaft)	Counter clockwise
Minimum continuous pump speed	**900 RPM**
Maximum continuous pump speed	**3000 RPM**
Maximum flow	**130 l/min** (**34.3 US gpm**)
Minimum flow requirement of pump at **22 bar**	**3 l/min** (**0.8 US gpm**)
Minimum suction pressure at cold start - **30 °C**, no function required, pump without damage	**0.3 bar** absolute
Nominal suction pressure range	**0.8 - 1.2 bar** (**11.6 - 17.4 psi**)
Normal working pressure	**22 - 25 bar** (**319.0 - 362.5 psi**)
Overpressure resistance	**80 bar** (**1160.0 psi**)

https://tractormanualz.com/

Priority valve - Exploded view

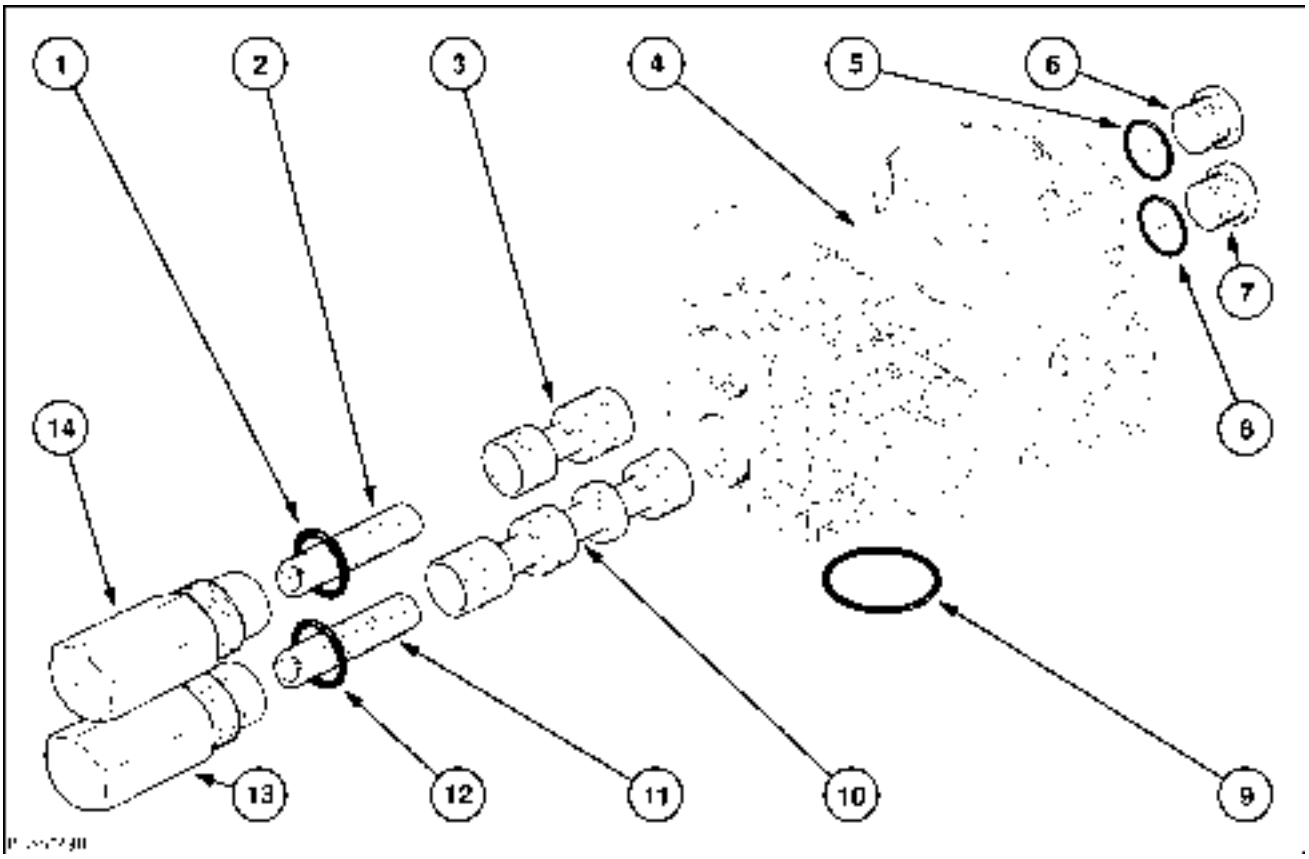

BAIL08CVT086FSA 1

1. Seal
2. Spring
3. Steering priority spool
4. Manifold body
5. Seal
6. Plug
7. Plug
8. Seal
9. Seal
10. Trailer brake priority valve Spool
11. Spring
12. Seal
13. Cap
14. Cap

https://tractormanualz.com/

Priority valve - Hydraulic schema

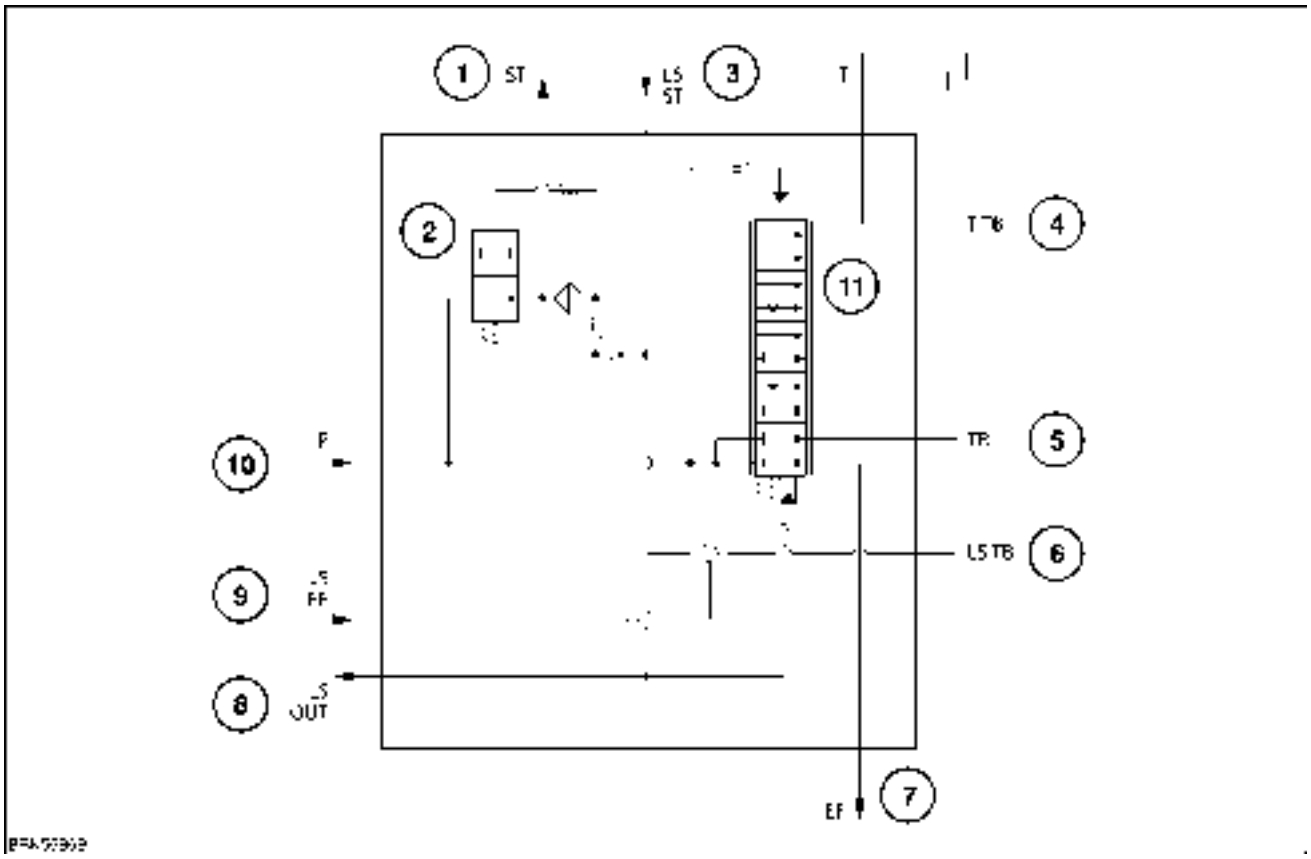

BAIL08CVT139FSA 1

1. Steering system line
2. Steering priority valve
3. Load sense line to steering
4. Trailer brake return to tank
5. Trailer brake pressure
6. Trailer brake load sensing line
7. Pressure to Remote valves
8. Load sensing line
9. Load sensing
10. High pressure from pump

https://tractormanualz.com/

Priority valve - Dynamic description

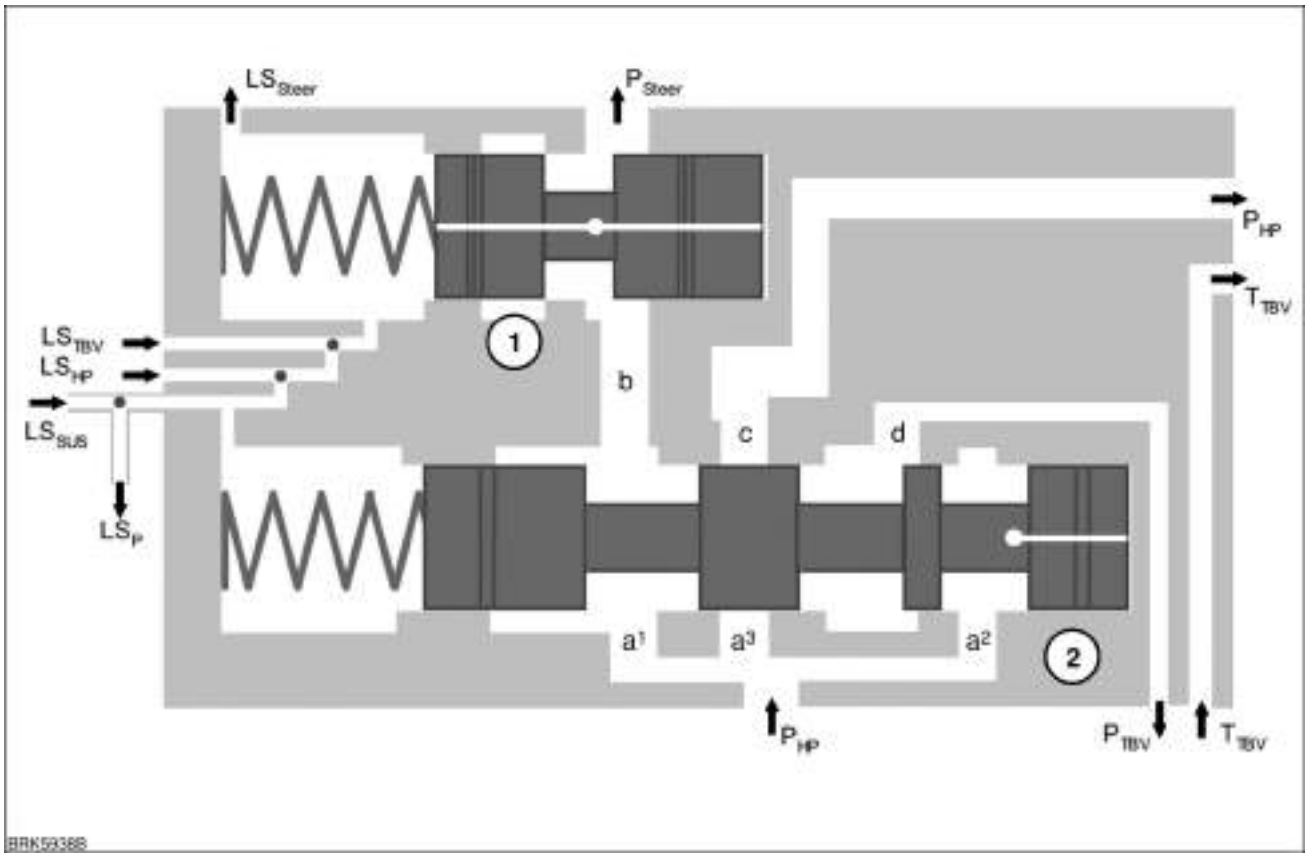

BAIL08CVT114FSA 1

No demand

Pump oil from the variable piston pump enters at Php and is delivered at, a¹ the steering supply; a² the trailer brake supply; and a³ the high pressure supply. Ports connect to the various tractor systems at PSteer, (steering); Ptbv, (trailer brake valve); and Php, (high pressure) circuits via galleries b, c, and d. Each system will transmit its pump requirements through the load sense lines LSsteer, (steering); LStbv (trailer brake valve); LSsus, (suspension); and LShp, high pressure lift and auxiliary remote valves. Sense line oil is fed to the pump compensating valves via LSp. A further gallery included is the trailer brake valve to tank TTBV for returning trailer brake oil.

https://tractormanualz.com/

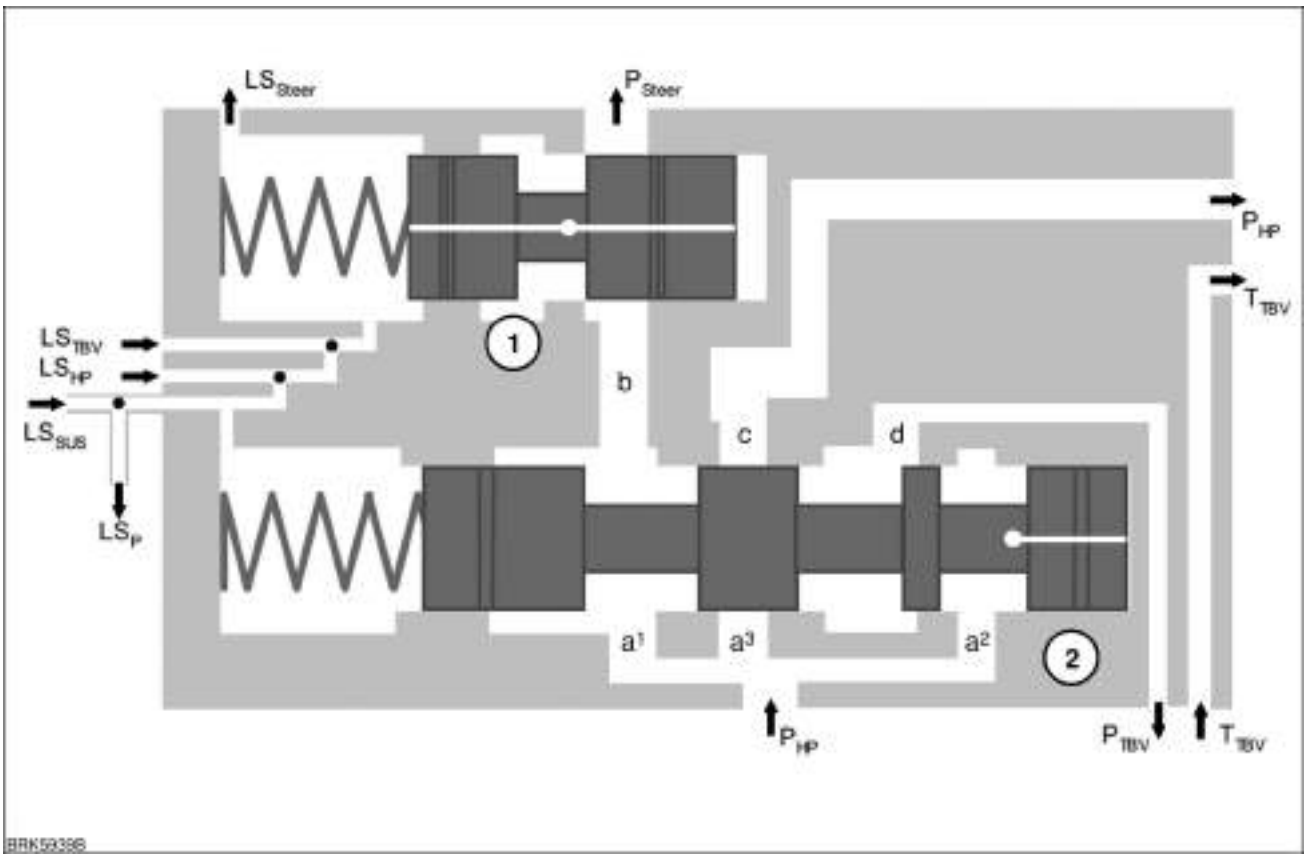

BAIL08CVT115FSA 2

Position 1

Pump oil passes a¹ to b then past the steering priority valve **(1)** then onto the steering orbital valve via PSteer. At the orbital valve the oil is capped and the pressure builds back through the circuit. Oil flows into the centre of the valve and out at each end via 2 restrictors. With the LSSteer port being open to tank at the orbital valve, less pressure can build on the spring side but can do so on the opposing side moving the valve **(1)** towards the spring causing a restriction. The reduced LS pressure is also seen at the pump flow compensating valve and adds pressure to the low pressure standby 'LPS' The pressure is now seen at gallery a² passes into the trailer brake priority valve **(2)** and acts on the end of the valve against the spring.

https://tractormanualz.com/

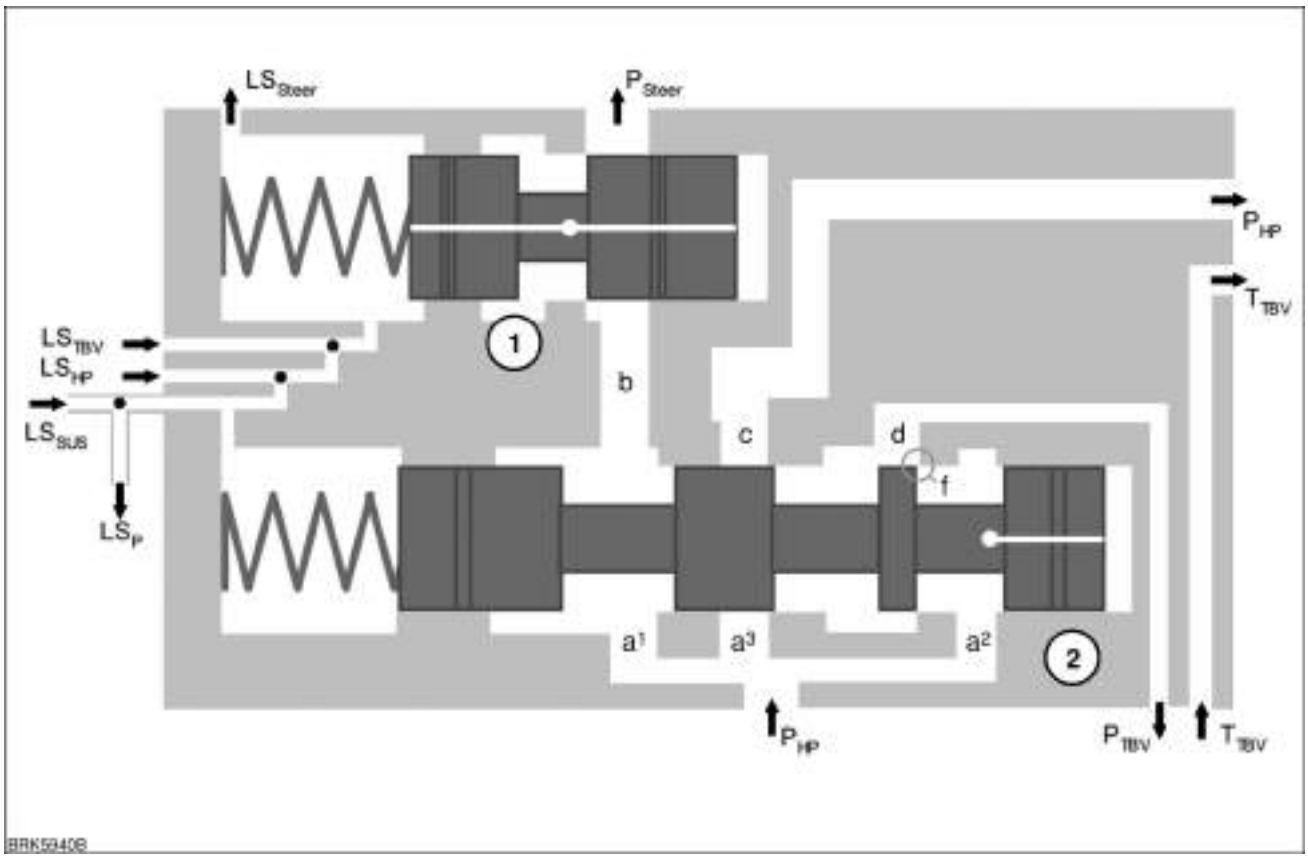

BAIL08CVT116FSA 3

Position 2

The valve moves to position 2. A restricted delivery is now being made to the trailer brake valve at ’f’.

https://tractormanualz.com/

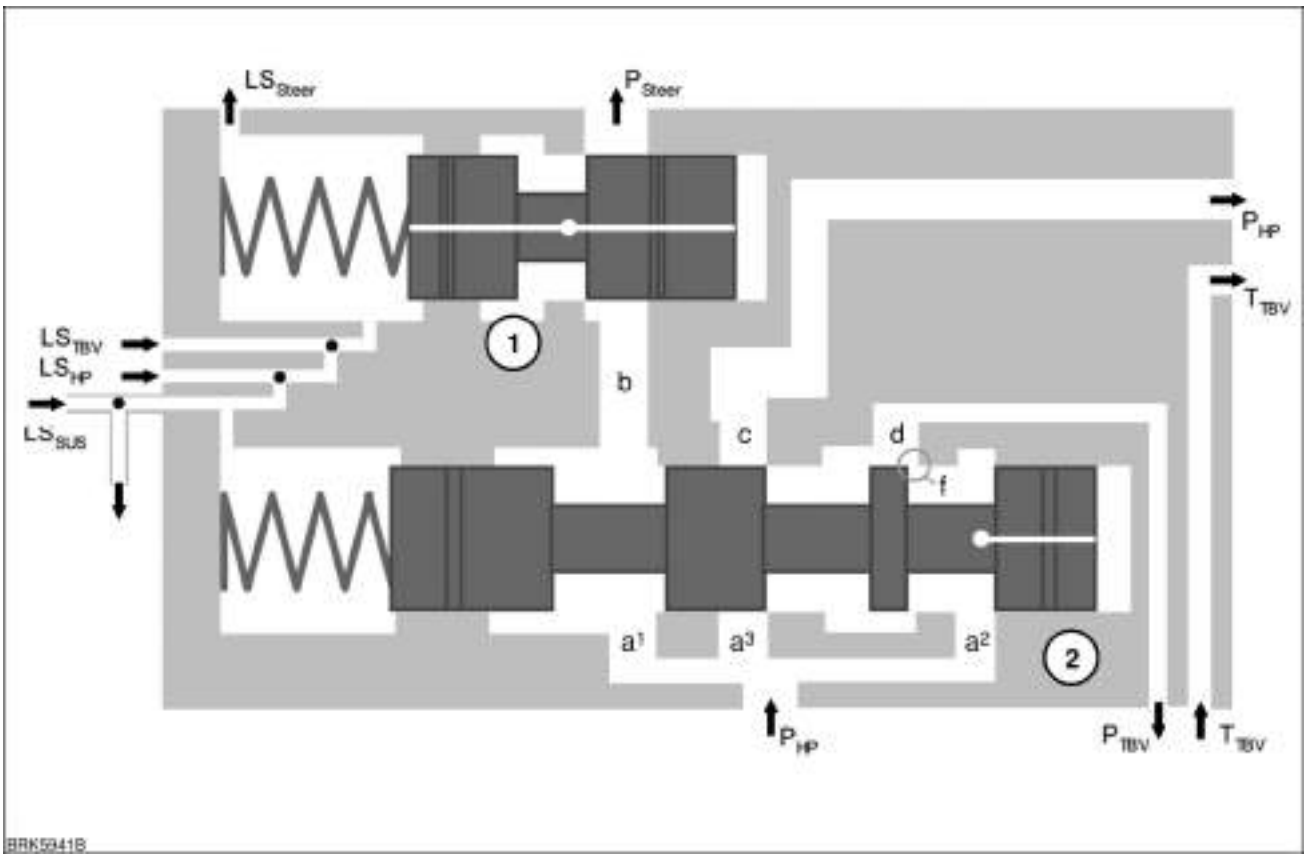

BAIL08CVT117FSA 4

Position 3

As pressure continues to rise against the spring the valve continues to move to position 3, with full delivery to the trailer brake valve at ’f’.

https://tractormanualz.com/

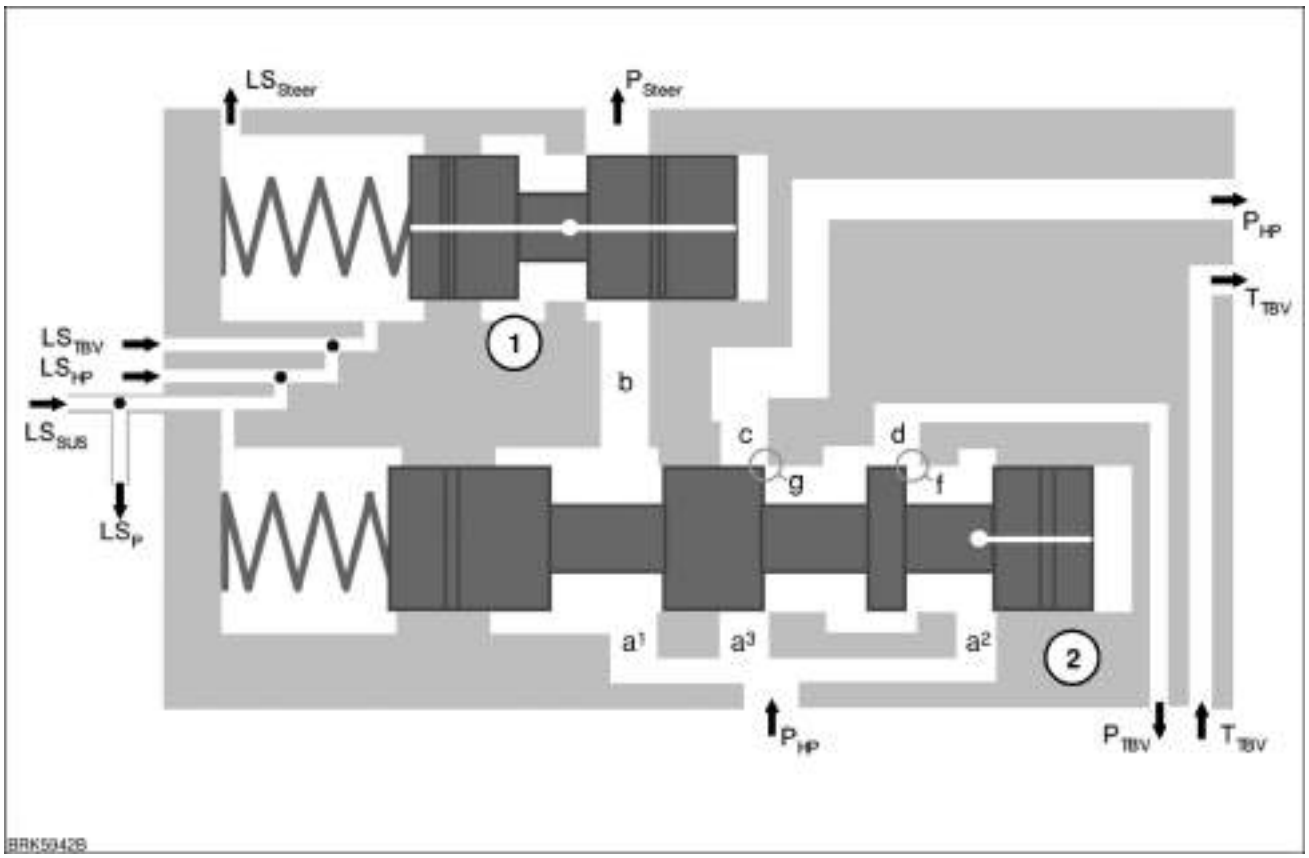

BAIL08CVT118FSA 5

Position 4

As pressure continues to rise against the spring, the valve now moves to position 4, full delivery to the trailer brake valve at ’f’, and a restricted delivery to the high pressure circuits at ’g’.

https://tractormanualz.com/

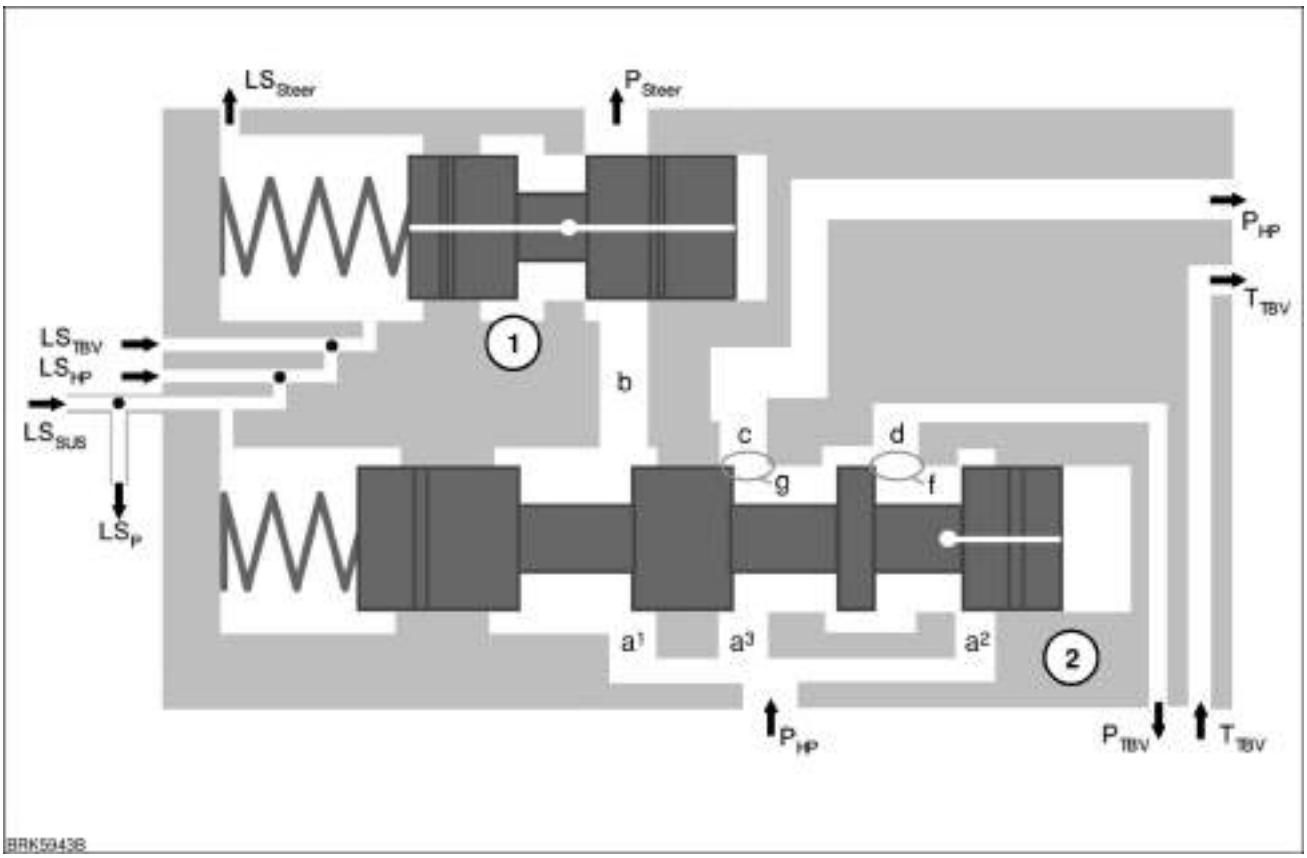

BAIL08CVT119FSA 6

Position 5

As all the circuits are satisfied and the pump meets the demands of tractor systems, pressure continues to rise against the spring, the valve continues to move to position 5, with full delivery to the trailer brake valve and the high pressure circuits. During steering, the LSSteer route to tank is stopped and pressure feed from the pump gallery of the orbital valve builds on the spring side of the valve **(1)** and also to the flow compensating valve. The priority valve moves with the spring allowing flow to the orbital valve and additional oil is provided by stroking the pump.

https://tractormanualz.com/

Priority valve - Remove

Prior operation:
Battery - Disconnect (A.30.A)

1. Remove trailer brake coupler pipe **(5)**
2. Disconnect the load sensing inlet pipe **(1)** and load sensing outlet pipe directly beneath (not shown).
3. Remove steering switch connectors. Disconnect steering pressure pipe from connector **(2)** and pipe to pressure compensator valve **(4)**
4. Disconnect high pressure feed to remote valves **(3)**.

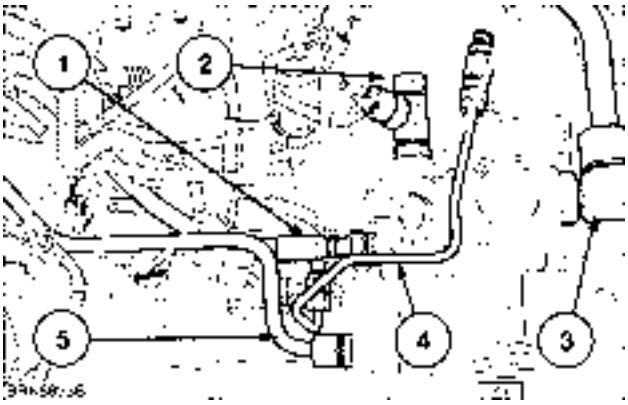

BAIL08CVT071ASA 1

5. Disconnect trailer brake return to tank pipe **(2)** and remove brake pipes **(1)** from pilot head.

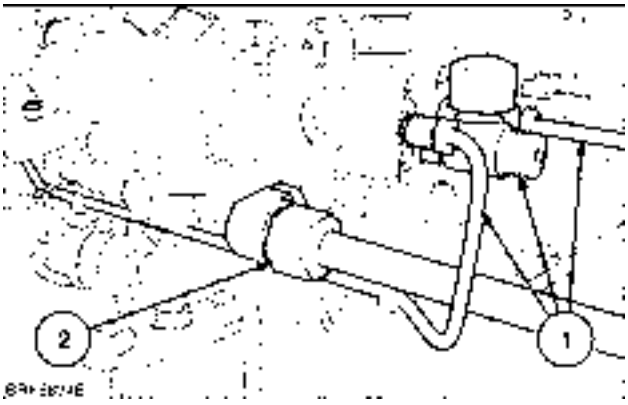

BAIL08CVT072ASA 2

6. Undo the hexagon headed screws **(1)** and **(2)** and remove the assembly from the rear axle housing.

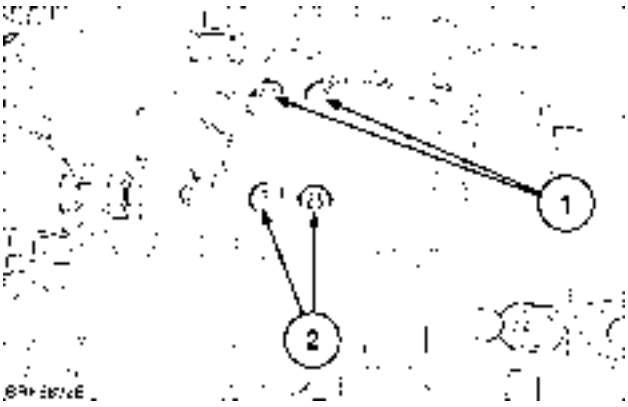

BAIL08CVT073ASA 3

https://tractormanualz.com/

Priority valve - Install

1. Place the priority valve assembly on the hydraulic pump housing. Install the hexagon headed screws and tighten to **50 Nm** (**36.9 lb ft**) .

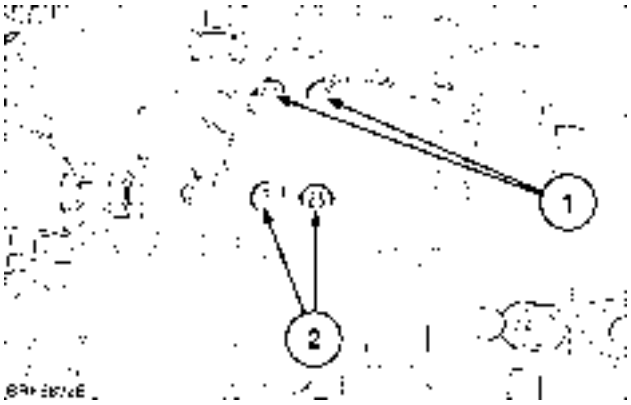

BAIL08CVT073ASA 1

2. Connect the brake pipes **(1)** to the pilot head and reconnect the trailer brake return pipe **(2)**.

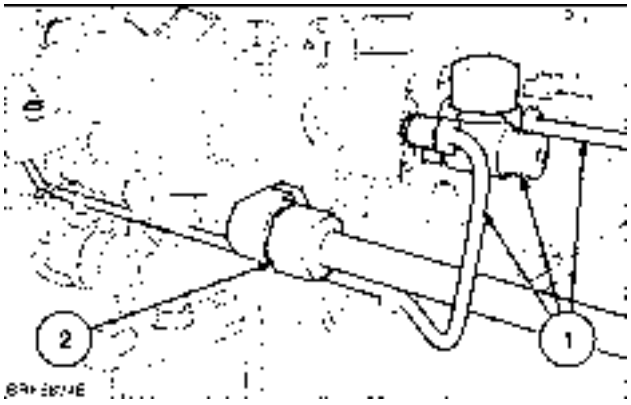

BAIL08CVT072ASA 2

3. Connect load sensing pipe **(1)**.
4. Connect the steering pressure pipe **(2)** and the pipe to the pressure compensating valve. **(4)**.
5. Connect the high pressure feed pipe **(3)** and the trailer brake coupler pipe **(5)**.

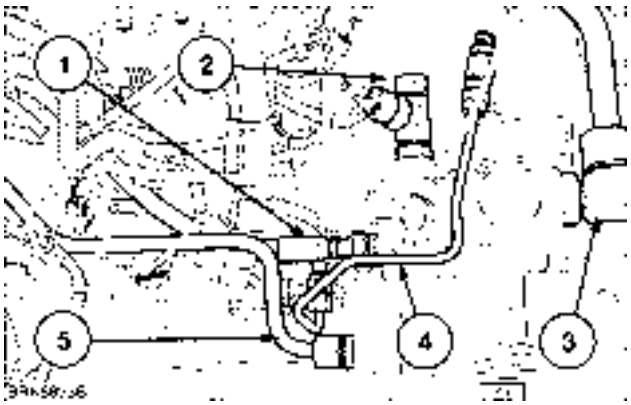

BAIL08CVT071ASA 3

https://tractormanualz.com/

Priority valve - Disassemble

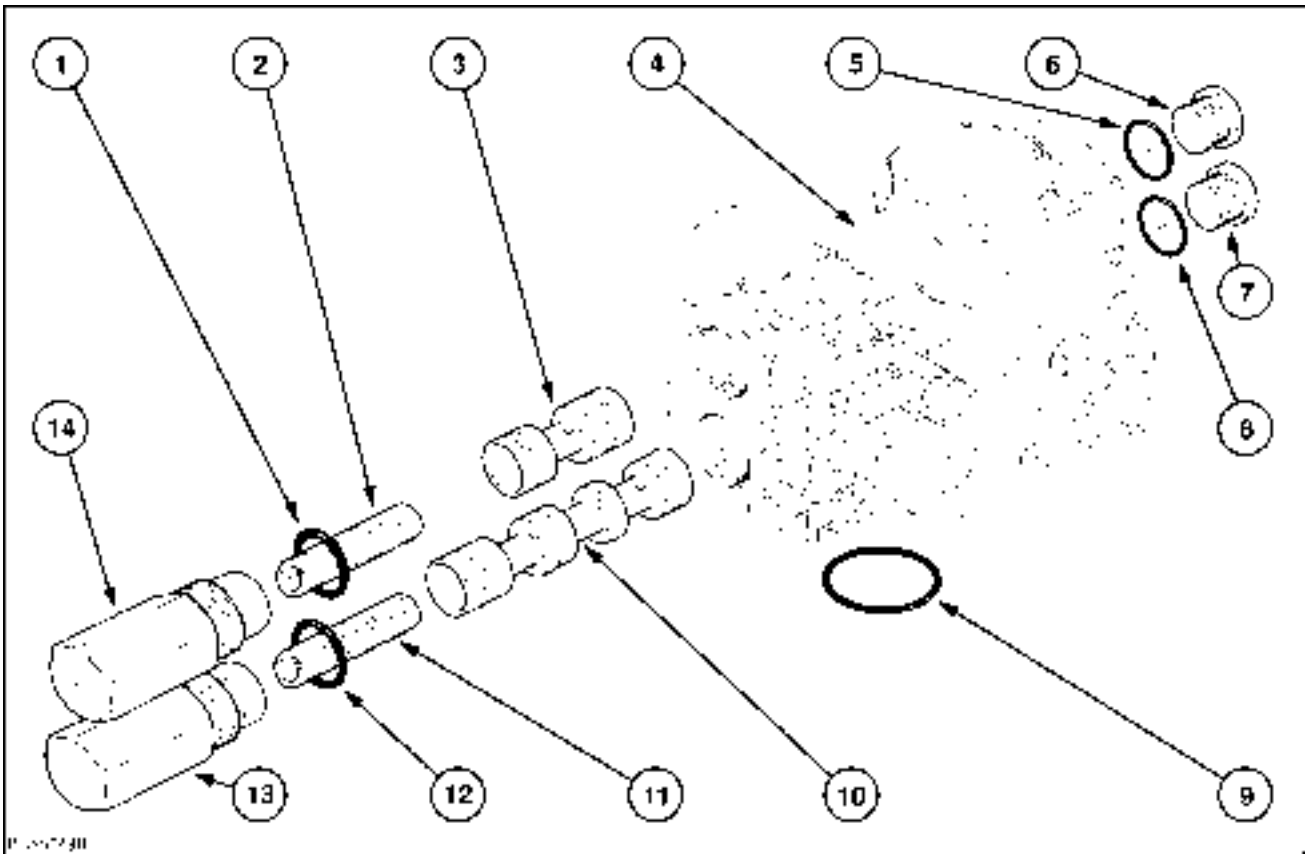

BAIL08CVT086FSA 1

1. Seal
2. Spring
3. Steering priority spool
4. Manifold body
5. Seal
6. Plug
7. Plug
8. Seal
9. Seal
10. Trailer brake priority valve Spool
11. Spring
12. Seal
13. Cap
14. Cap

1. Remove steering spool retaining nut **(14)**.
2. Remove trailer brake priority spool retaining nut. **(13)**.

⚠ WARNING ⚠

The capscrew is under spring pressure. Hold the spring compressed while removing the capscrew.

SM204A

3. Withdraw the spools from the housing and inspect for damage.
4. If the spools or bores are damaged replace the valve assembly.

https://tractormanualz.com/

Index

DISTRIBUTION SYSTEMS - A

HYDRAULIC COMMAND SYSTEM - 14.A

Hydraulic pump - General specification Vane Pump 4
Priority valve - Disassemble 15
Priority valve - Dynamic description 7
Priority valve - Exploded view 5
Priority valve - General specification 3
Priority valve - Hydraulic schema 6
Priority valve - Install 14
Priority valve - Remove 13

https://tractormanualz.com/

DISTRIBUTION SYSTEMS - A

ELECTRICAL POWER SYSTEM - 30.A

Puma 165 CVX
Puma 180 CVX
Puma 195 CVX
Puma 210 CVX
Puma 225 CVX

https://tractormanualz.com/

Contents

DISTRIBUTION SYSTEMS - A

ELECTRICAL POWER SYSTEM - 30.A

TECHNICAL DATA
ELECTRICAL POWER SYSTEM
General specification 6
Fuse and relay box
General specification 7
Alternator
Torque 11
General specification 11
Battery
General specification 12

FUNCTIONAL DATA
ELECTRICAL POWER SYSTEM
Static description PROTECTING THE ELECTRONIC AND ELECTRICAL SYSTEMS DURING BATTERY CHARGING OR WELDING 13
Fuse and relay box
Static description 14
Alternator
Static description 16
Battery
Static description 17
Connector
Overview Wiring Harness Hood 18
Overview Wiring Harness Engine 19
Overview Wiring Harness Drive Line 21
Overview Wiring Harness Main Cab 23
Overview Wiring Harness Fender 25
Overview Wiring Harness Roof 26
Component Diagram 00 27
Component diagram 01 33
Component diagram 02 37
Component diagram 03 44
Component diagram 05 52
Component diagram 06 54
Component diagram 07 55
Component diagram 08 61
Component diagram 09 67

https://tractormanualz.com/

Component diagram 10 75
Component diagram 11 80
Component diagram 12 84
Component diagram 13 87
Component diagram 15 89
Component diagram 16 91
Component diagram 17 96
Component diagram 18 100
Component diagram 19 104
Component diagram 20 108
Component diagram 21 109
Component diagram 22 115
Component diagram 23 119
Component diagram 24 125
Component diagram 25 126
Component diagram 26 129
Component diagram 27 132
Component diagram 28 135
Component diagram 29 136
Component diagram 30 137
Component diagram 32 142
Component diagram 33 143
Component diagram 39 147
Component diagram 40 149
Component diagram 42 158
Component diagram 43 162
Component diagram 44 164
Component diagram 45 165
Component diagram 46 166
Component diagram 47 169
Component diagram 48 170
Component diagram 49 173
Component diagram 50 174
Component diagram 52 177
Component diagram 53 180
Component diagram 54 183
Component diagram 55 187
Component diagram 57 190
Component diagram 60 191
Component diagram 61 195
Component diagram 62 201
Component diagram 63 207
Component diagram 65 208

https://tractormanualz.com/

Component diagram 66 210
Component diagram 67 213
Component diagram 68 216
Component diagram 69 219
Component diagram 70 223
Component diagram 71 227
Component diagram 72 233
Component diagram 73 236
Component diagram 74 239
Component diagram 75 242
Component diagram 76 248
Component diagram 77 251
Component diagram 78 254
Component diagram 80 258
Component diagram 81 260
Component diagram 82 266
Component diagram 83 270

Wiring harness

Overview 273
Electrical schematic frame 01 Power Distribution (Maxi Fuses 1 - 6) 290
Electrical schematic frame 02 Power Distribution (Fuses 1 - 14) 292
Electrical schematic frame 03 Power Distribution (Fuses 15 - 21) 294
Electrical schematic frame 04 Power Distribution (Fuses 22 - 30) 296
Electrical schematic frame 05 Power Distribution (Fuses 31 - 45) 298
Electrical schematic frame 06 Power Distribution (Fuses 46 - 54) 300
Electrical schematic frame 07 Power Distribution (Fuses 55 - 60) 302
Electrical schematic frame 08 Start/Charging (Start & Charging W/Isolator) 304
Electrical schematic frame 09 Start/Charging (without Isolator) 306
Electrical schematic frame 10 ECU (Engine ECU) 308
Electrical schematic frame 11 Engine Control Unit (Engine ECU) 310
Electrical schematic frame 12 Power Distribution (Power Earthing) 312
Electrical schematic frame 13 Transmission (Transmission Controller) 314
Electrical schematic frame 14 Transmission (Transmission Controller) 316
Electrical schematic frame 15 Electronic Draft Control (Transmission Controller) 318
Electrical schematic frame 16 5V Supply, Sensor Ground, Seat (Transmission Controller) 320
Electrical schematic frame 17 Transmission (Power Take Off) 322
Electrical schematic frame 18 SFA, EHR'S, Link Leveling (Auxiliary Control Unit) 324
Electrical schematic frame 19 Front Hitch, PTO (Auxiliary Control Unit) 326
Electrical schematic frame 20 Fast Steer (Steering Control Unit) 328
Electrical schematic frame 21 Lighting (Instrument Cluster) 330
Electrical schematic frame 22 Instruments (Instrument Cluster) 332
Electrical schematic frame 23 ECU (Armrest) 334
Electrical schematic frame 24 ECU (Armrest) 336

https://tractormanualz.com/

Electrical schematic frame 25 Steering (Auto Guidance) 338
Electrical schematic frame 26 Can Power (Can System) 340
Electrical schematic frame 27 Heating (Climate Control Auto) 342
Electrical schematic frame 28 Heating (Climate Control Manual) 344
Electrical schematic frame 29 Heated Mirrors 346
Electrical schematic frame 30 Heating (Heated Screen) 348
Electrical schematic frame 31 Cigar Lighter (Implement Sockets) 350
Electrical schematic frame 32 Lighting 352
Electrical schematic frame 33 Lighting Auxiliary (Worklamps/Beacons) 354
Electrical schematic frame 34 Lighting (Side, Console & Licence Plate Lamps) 356
Electrical schematic frame 37 Lighting (Headlamps / Worklamps Hood) 358
Electrical schematic frame 38 Lighting (Trailer) 360
Electrical schematic frame 39 Lighting (Interior Lights) 362
Electrical schematic frame 40 Lighting (Stop / Tail Lamps & Worklamps) 364
Electrical schematic frame 41 I.C.E (Radio) 366
Electrical schematic frame 42 Washers & Wipers 368
Electrical schematic frame 43 Colour Display (Instruments) 370
Electrical schematic frame 44 Braking (Trailer Brakes) 372
Electrical schematic frame 45 Braking (Electronic Park Lock) 374
Electrical schematic frame 46 Front Loader Relays 376
Electrical schematic frame 47 Isobus (Isobus Power) 378
Electrical schematic frame 48 Diagnostics 380
Electrical schematic frame 49 CAN System (CAN BUS 1) 382
Electrical schematic frame 50 CAN System (EHR CAN) 384
Electrical schematic frame 51 CAN System (EHR CAN) 386
Electrical schematic frame 52 CAN System (EHR CAN) 388
Electrical schematic frame 53 CAN System (ISO BUS CAN) 390

SERVICE

Battery

Disconnect 393
Connect 394
Remove 396
Install 398

https://tractormanualz.com/

ELECTRICAL POWER SYSTEM - General specification

Description	All Models
Alternator	ISKRA, **12 V**, **150 A** (optional with heated screen **200 A**)
Battery	Minimum maintenance **12 V** 176 Ah (1300 cca)
Starting motor	Positive engagement, solenoid operated **4.2 kW** - geared reduction
Cold starting aid	Optional inlet manifold grid heater (**80 A**) and fuel heater
Bulb rating and type	
- headlights	**60/55 W** - H4
- parking lights (front)	**5 W** - R**5 W**
- parking lights (rear)	**5 W** - P **21/5 W**
- work lights (hi-mount rear, on C-pillar and grabrail)	**12 V 55 W** - H3
- turn indicators (front)	**21 W** - PY**21 W**
- turn indicators (rear)	**21 W** - R**21 W** or PY**21 W**
- stop lights	**21 W** - P **21/5 W**
- licence plate lights	**5 W** - R**5 W**
- rotating beacon	**55 W** - H1
- interior / step light	**12 V** R **10 W**
- HID Xenon work lights rear roof	HID DIS **12 V 35 W**
- work lights hood	**12 V 50 W** - GE886
- SMV (slow moving vehicle) lights (N. America only) and extremity lights	**21 W**-P**21 W**
- intermediate front hood Xenon	HID DIS **12 V 35 W**
- roof front work lights	**12.8 V 50 W** - GE885

https://tractormanualz.com/

Fuse and relay box - General specification

Description of the relays

Relay	Function
K001 / K002	Wiper Module Front & Rear
K003	Ignition Relay
K004	Lights Relay
K005	Starter Motor On
K006	Blower Motor
K007	Dipped Beam Headlamps
K008	Stop Lamps Relay
K009	Main Beam Headlamps
K010	Hydraulic Trailer Brake
K011	Electronic Park Brake
K012	Pneumatic Trailer Brake
K013	Engine Shutdown
K014	Get U Home
K015	Front Worklamps Hood
K016	Rear Worklamps C Pillar Relay
K017	Power Supply ECU
K018	EL.Battery Isolator
K019	Air Condition Clutch Relay
K020	El.Hydraulic Remote Lock Relay
K021	Timer Relay Battery Isolator
K022	Heated Mirror Timer Relay
K044	Front Screen Heater Relay
K045	Rear Screen Heater Relay
NOTE: The following relays are located outside the safety box!	
K023	Grid Heater Relay
K024	Fuel Heater Relay
K040	ISO Relay 1 Rear
K041	ISO Relay 2 Rear
K042	ISO Relay 1 Front
K043	ISO Relay 2 Front
K046	Reversible Fan Relay
K050	Relay Base Crank Isolate
K051	Relay Base Solenoid B
K052	Relay Base Solenoid A
K053	EL.Shiftable PTO Drive Upper Speed Relay
K054	EL.Shiftable PTO Drive Lower Speed Relay

Fuses

No.	Amps	Circuit
F001	10	Interior and step lighting and relay mirror heating
F002	25	Cigar lighter and power socket, cab (potential 30)
F003	10	Coupling of the A/C compressor
F004	10	Screw terminal red (potential 30)
F005	30	Blower motor
F006	10	Station memory and work lamp control unit
F007	20	Switch - Main headlights and hazard light switch
F008	20	Starter switch
F009	25	Front loader power
F010	30	Rear power socket (potential 15)
F011	15	Front windscreen wiper

https://tractormanualz.com/

No.	Amps	Circuit
F012	10	Rear windscreen wiper / switch, windscreen washing system, front/rear
F013	15	Relay, brake lights
F014	15	Headlight switch and flasher
F015	20	Brake light switch and pedal lock
F016	15	Trailer brake
F017	25	Power socket, cab (potential 15)
F018	15	Air blower motor relay and driver's seat / Armrest adjust
F019	15	Heated mirrors
F020	10	Radar sensor, normal signal socket / keypad
F021	15	Water sensor for the fuel filter, brake fluid level switch
F022	15	Side marker lights, right
F023	15	Side marker lights, left / licence plate lights
F024	10	Illumination - Lighting / cigar lighter - ICU - VT - heated mirror switch - EHR-lock switch
F025	15	Dipped beam headlights relay, get you home
F026	15	Main beam headlights
F027	30	Front work lamp (bonnet)
F028	15	Work lamp control unit / Roof rear worklamps
F029	30	Work lamp control unit / Roof front worklamps + grabrail
F030	15	Work lamp (C-pillar)
F031	15	Rotating beacon (via work lamp control unit)
F032	15	Flasher unit
F033	25	Diagnostics plug 1/2
F034	10	ICU 3 and hand brake switch
F035	10	Potential 30 for electronics
F039		Not used
F040	10	Radio memory
F041		Not used
F042		Not used
F043	10	Engine electronics (potential 15)
F044	25	Front-mounted equipment socket (B+)
F045	25	Power supply - **8 A** socket (potential 15) C-pillar left
F046	15	Engine controller B+ supply
F047	10	Engine controller B+ supply
F048		Not Used
F049	15	Viscotronic fan, relay heater grid, relay fuel filter heater, exhaust brake
F050	15	Reversible fan
F051	25	Electronic park brake
F052	10	ICU 3 supply
F053	15	Transmission control supply (potential 15)
F054	10	PTO rear
F055	10	Supply Ignition Fast Steer / GARU / A/C pressure switch / ACU / CCU
F056	15	PTO front
F057	15	Supply Ignition / ACU - Front hitch
F058		Not Used
F059		Not Used
F060	10	Timer relay battery isolator - battery isolator control switch

https://tractormanualz.com/

Maxi Fuses

No.	Amps	Fused components
MF1	80	Supply to F009, F013, F018, F021, F045, F050
MF2	30	Supply to F006, F007, F008, F036, F037, F038
MF3	80	Supply to V019, F030, K005, K013
MF4	80	Supply to F027, K015
MF5	80	Supply to F026, F031, F051
MF6	80	Supply to F001, F002, F003, F004, F005, F044
MF7	30	Supply heated windscreen front
MF8	20	Supply heated screen rear

Diode

Diode	Function
V001	Get you home
V002	Get you home
V003	Get you home
V004	Dipped Beam Headlamps Diode
V005	Brake Light Diode
V006	Brake Light Diode
V007	El. Battery Isolator Diode
V019	Less El. Battery Isolator Diode
V020	With El. Battery Isolator Doide

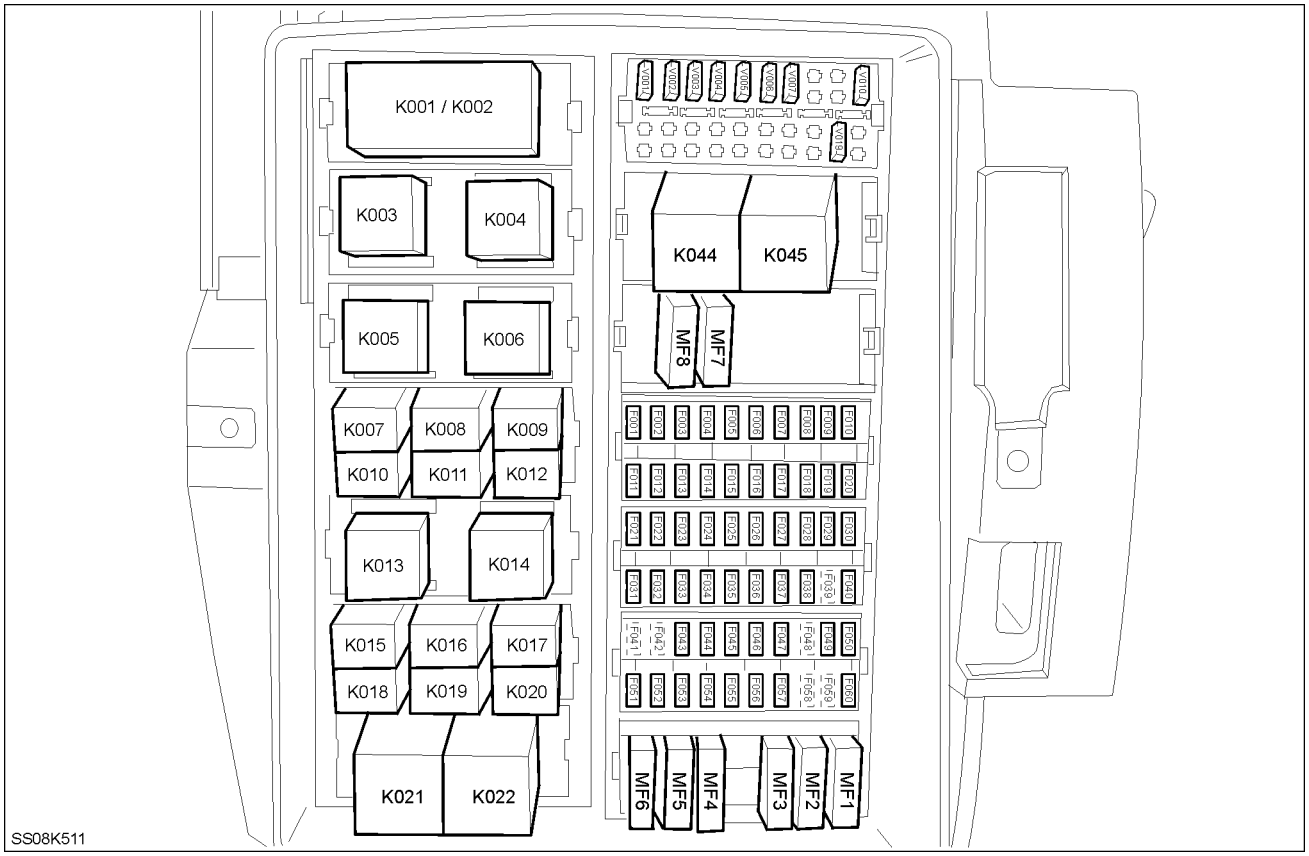

SS08K511 1

https://tractormanualz.com/

Fuses for the electrical supply

Fuse No.	Amps	Fuse-protected power supply
PF1	250	Power Fuse, Main power supply B+ (250A)
PF2	30	Power Fuse, Power Supply CCU
PF3	30	Power Fuse, Power Supply Memory

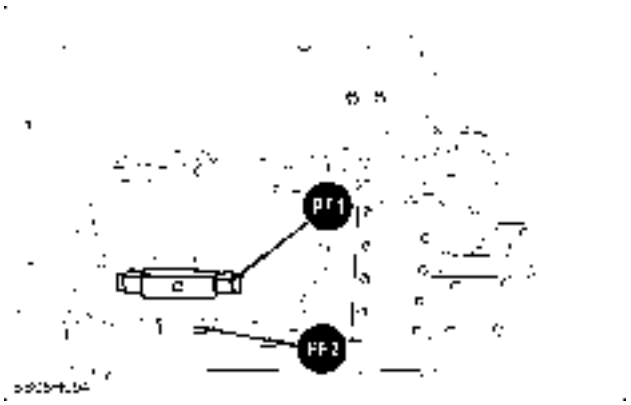

SS08H094 2

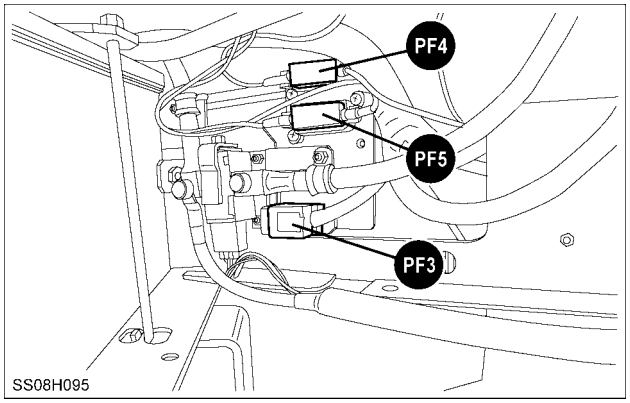

SS08H095 3

Main current fuses for the ISO BUS power supply (if installed)

Fuse No.	Amps	Fuse-protected power supply
PF4	30	Power Fuse, ISO Bus Rear
PF5	30	Power Fuse, ISO Bus Rear
PF6	30	Power Fuse, ISO Bus Front
PF7	30	Power Fuse, ISO Bus Front

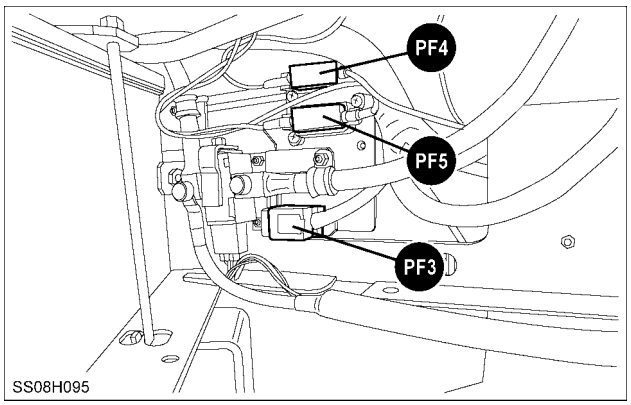

SS08H095 4

https://tractormanualz.com/

Alternator - Torque

	Value
Pulley Retaining Nut	**80 Nm** (**59.0 lb ft**)
Terminal Nut - B+	**12 Nm** (**8.9 lb ft**)
Terminal Nut - D+	**3.5 Nm** (**2.6 lb ft**)
Mounting Bolts	**25 Nm** (**18.4 lb ft**)

Alternator - General specification

Polarity	Negative Ground
Nominal Voltage	**14.0 V**
Maximum Rev/Min. - Permanent/Intermittent	15,000/18,000
Nominal Output	**150 A** / **200 A**
Regulator Controlled Voltage	**14.1 V +/- 0.15**
Rotor Field Winding Resistance	**2.7 Ω +/- 0.27 @ 23 °C** (**73.4 °F**) ± **5 °C** (**41.0 °F**) (at **150 A**) **2.9 Ω +/- 0.10 @ 23 °C** (**73.4 °F**) ± **5 °C** (**41.0 °F**) (at **200 A**)

https://tractormanualz.com/

Battery - General specification

Temperature	Efficiency of a Fully Charged Battery
25.0 °C (**77.0 °F**)	**100 %**
-4.5 °C (**23.9 °F**)	**82 %**
-24.0 °C (**-11.2 °F**)	**64 %**
-27.5 °C (**-17.5 °F**)	**58 %**
-31.0 °C (**-23.8 °F**)	**50 %**
-34.5 °C (**-30.1 °F**)	**40 %**
-37.5 °C (**-35.5 °F**)	**33 %**

	176 Ah (**1300 cca**)
Slow Charge Programs	46 hours at **5 A**
	23 hours at **10 A**
Fast charge Program (emergencies only)	13 hours at **18 A**

Use the following table to determine the state of charge

State of Charge	Corrected Specific Gravity @ **15 °C** (**59.0 °F**)	Corrected Specific Gravity @ **25 °C** (**77.0 °F**)	Average Battery Voltage
100 %	1.295	1.287	12.76
75 %	1.253	1.246	12.52
50 %	1.217	1.210	12.30
25 %	1.177	1.170	12.06
Discharged	1.137	1.130	11.84

Specific Gravity	Fast charge up to :
1.150 SG or less	**60 minutes**
1.151 - 1.175 SG	**45 minutes**
1.176 - 1.200 SG	**30 minutes**
1.201 - 1.225 SG	**15 minutes**
	(Slow charge only)

Description	Battery Specification
Capacity (Ampere hour at 20 hour rate)	176
Cold Cranking Ampere Rating	1300
Voltage	12
Cells	6
Ground Terminal	Negative

https://tractormanualz.com/

ELECTRICAL POWER SYSTEM - Static description PROTECTING THE ELECTRONIC AND ELECTRICAL SYSTEMS DURING BATTERY CHARGING OR WELDING

Precautions

To avoid damage to the electronic/electrical systems, always observe the following:

1. Never make or break any of the charging circuit connections, including the battery connections, when the engine is running.
2. Never short any of the charging components to earth.
3. Do not use a slave battery of higher than **12 V** nominal voltage.
4. Always observe correct polarity when installing the batteries or using a slave battery to jump start the engine. Follow the instructions in the operator's manual when jump starting the tractor. Connect positive to positive and negative to negative.
5. Always disconnect the earth cable from the batteries before carrying out arc welding on the tractor or on any implement attached to the tractor.
6. Position the welder earth cable clamp as close to the welding area as possible.
7. If welding is to be carried out in close proximity to a computer module, then the module should be removed from the tractor. It is recommended that this procedure be carried out by an authorised dealer.
8. Never allow welding cables to lay on, near or across any electrical wiring or electronic component while welding is in progress.
9. Always disconnect the negative cable from the batteries when charging the batteries in the tractor with a battery charger.

⚠ WARNING ⚠

Batteries contain sulphuric acid. In case of contact with skin, flush the affected area with water for five minutes. Seek medical attention immediately. Avoid contact with the skin, eyes or clothing. Wear eye protection when working near batteries.

B040

IMPORTANT: *Failure to disconnect the two earth cable connections at the battery prior to charging the batteries or welding on the tractor or attached implement will result in damage to the electronic and electrical systems.*

https://tractormanualz.com/

Fuse and relay box - Static description

Fuses and Relays

IMPORTANT: *Do not replace a blown fuse with another of a different rating.*

The fuse box and relay box is located behind a panel at the right-hand side.
To check or change fuses or relays, remove the two screws securing the panel to the console.
In addition to the main fuses there are additional 'Maxi' fuses which are provided to protect the main fuses and electrical circuit.
There is provision for 60 fuses although they may not all be fitted, depending on the specification of the tractor. The fuses are numbered and colour coded.
Refer to **Fuse and relay box - General specification (A.30.A)** for fuse positions and descriptions and for relay functions.

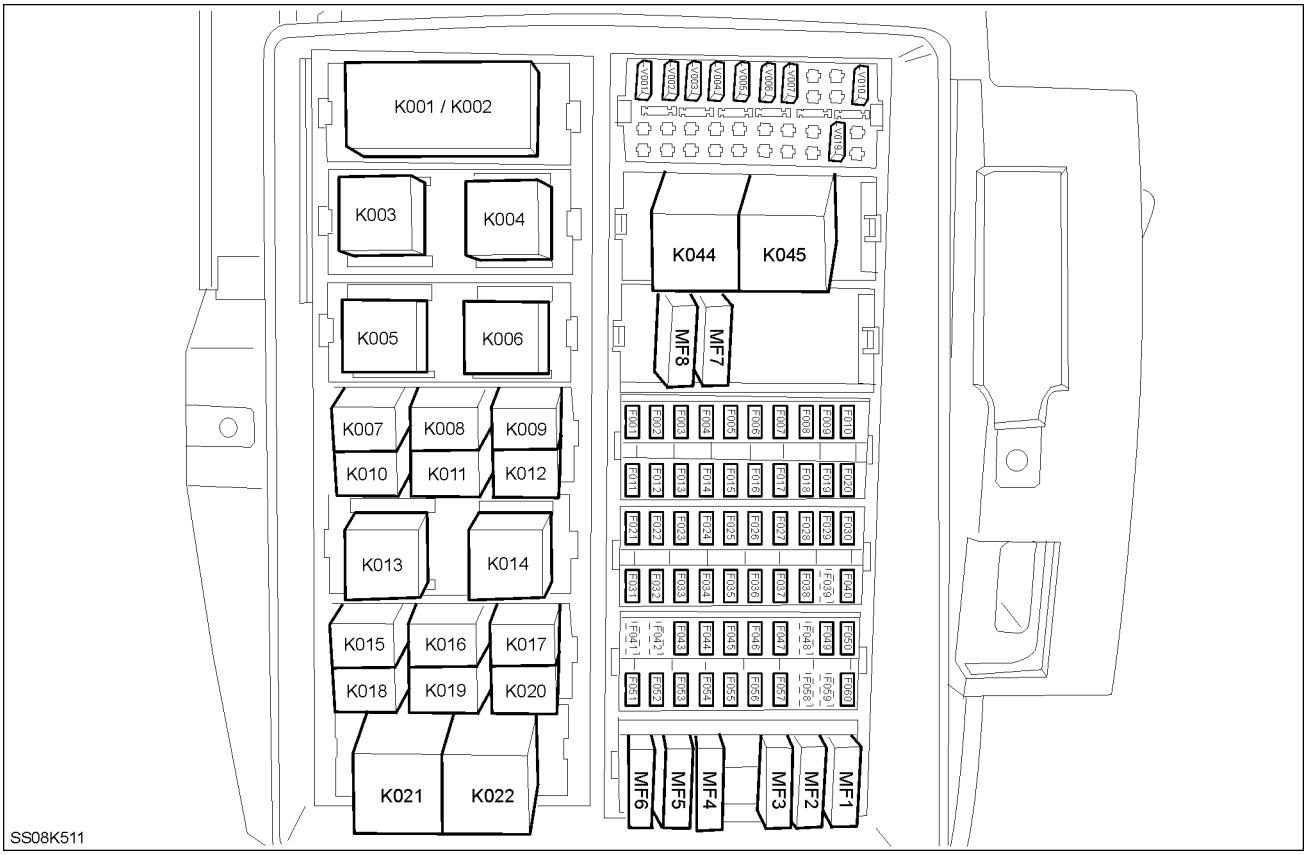

SS08K511 1

The flasher relay unit **(1)**, is located behind the right hand trim on the top of the fuse and relay box.

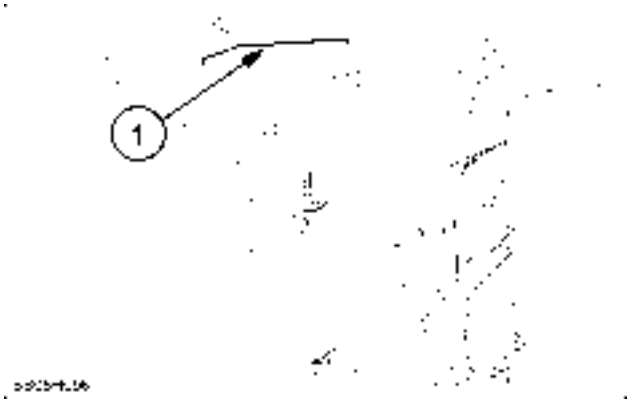

SS08H096 2

https://tractormanualz.com/

Grid Heater relay **(1)**, located to the rear of the left hand side of the engine.

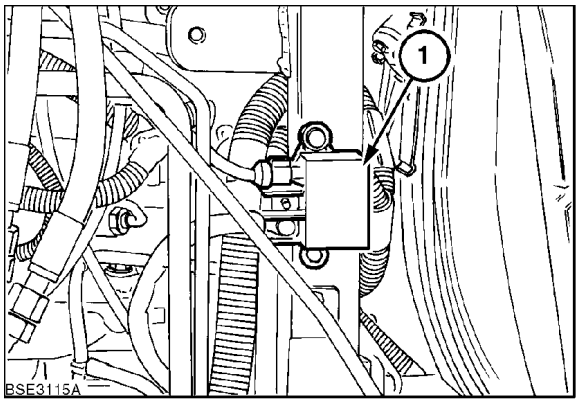

BSE3115A 3

Grid Heater Fuse (**125 A**) **(1)**, located on the right hand side of the engine near the starter motor.

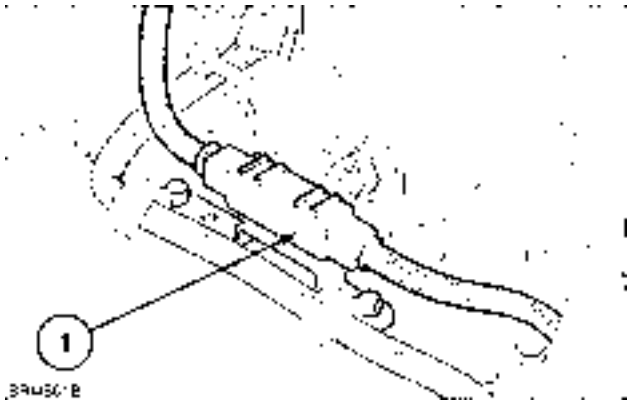

BRI4561B 4

In addition to the fuses in the internal fuse box, there are also extra fuses located on the battery tray. A **250 A** 'MEGA' fuse **(1)** which protects the main electrical system and one **30 A** fuse **(2)** which protect the front lift electrical system, supply to the electronics system and implement ISO BUS circuit and battery isolator circuit (where fitted).

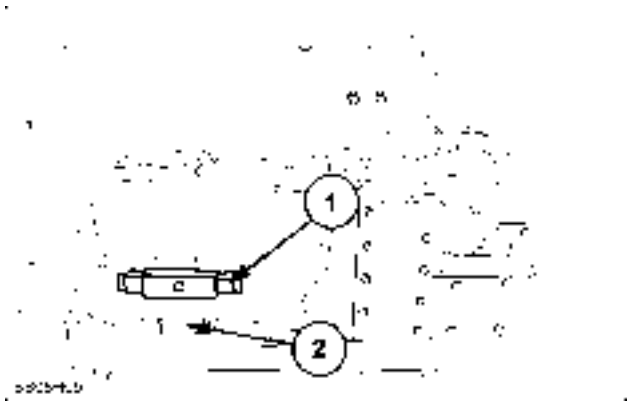

SS08H097 5

https://tractormanualz.com/

Alternator - Static description

ISKRA **150 A** (optional with heated screen **200 A**) alternators are fitted to all models. They incorporate internal cooling fans and integral regulators. The alternator is mounted at the front on the left hand side of the engine and is driven from a crankshaft pulley via a 'poly vee' drive belt.

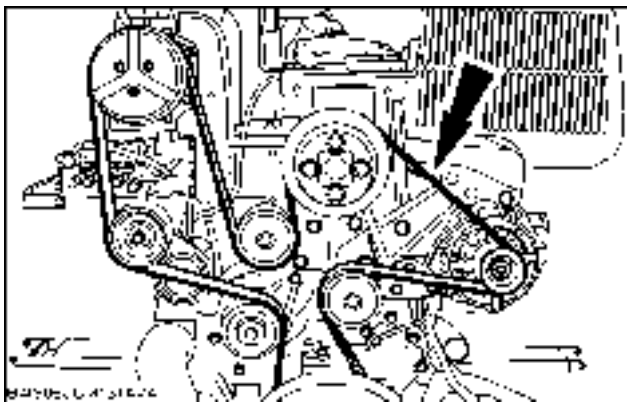

BAIS06CCM131AVA 1

Alternator Operation

Refer to **Wiring harness - Electrical schematic frame 08 Start/Charging (Start & Charging W/Isolator) (A.30.A)** for charging circuit schematic.
When the key start switch is turned on a small current flows from the battery through the rotor field wiring. The circuit is made via the charge indicator warning lamp, alternator terminal 'D+' the rotor field winding, the alternator regulator and ground.
At this stage the warning light is illuminated and the rotor partially magnetised.
When the engine is started and the partially magnetised rotor revolves within the stator windings a 3-phase alternating current is generated. A constant portion of the generated current is converted to direct current by the three field diodes incorporated in the rectifier pack.
This direct current is fed back to supplement the current flowing through the rotor field winding.
This action results in an ever increasing magnetic influence of the rotor along with an associated rapid rise in generated output current and voltage.
During the rise in generated output voltage (reflected at the 'D+' terminal) the brilliance of the warning lamp is reduced and when the voltage at the 'D+' terminal equates to that at the battery side of the warning light the lamp is extinguished.
The voltage continues to rise until the predetermined regulated voltage level is reached.
In the event of drive belt breakage the voltage will not build up within the alternator and so the charge indicator light will remain on to indicate failure.

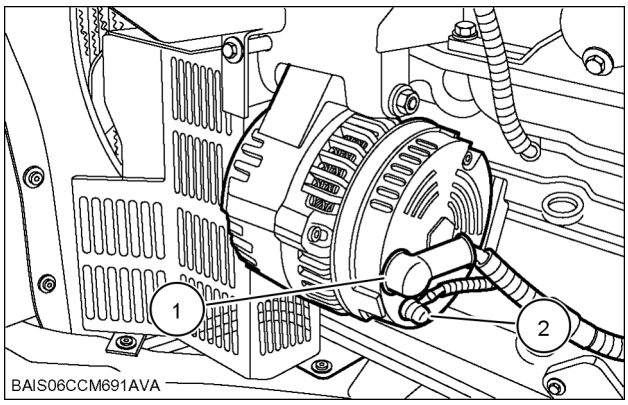

BAIS06CCM691AVA 2

Alternator

1 Output Connection (B+ Terminal)
2 Warning Lamp (D+ terminal)

https://tractormanualz.com/

Battery - Static description

All models use a single “low maintenance - hybrid" battery with negative ground of six cell construction and is located on the right hand side of the tractor behind the cab steps.

NOTE: *"Low maintenance" means that under normal charging conditions the battery may lose a small amount of water from the electrolyte. Conditions that may cause water loss include prolonged charging above* ***14.4 V*** *where gassing occurs as it approaches full charge. This can be caused by a faulty charging system or boost/recovery charging equipment.*

The battery has four major functions:

- To provide a source of current for starting, lighting and instrumentation.
- To help control the voltage in the electrical system.
- To furnish current when the electrical demands exceed the alternator output.
- To support quiescent loads from radio and micro processor memory.

The battery is constructed in such a manner that each cell contains positive and negative plates placed alternatively next to each other. Each positive plate is separated from a negative plate by a non-conducting porous envelope separator. If any of the positive plates should make contact with negative plates within a cell, the cell will short circuit and suffer irreparable damage. All of the positive plates are welded to a bus-bar, forming a positive terminal and all of the negative plates are welded to a similar bus-bar forming a negative terminal.
Each positive plate is composed of a lead grid with lead peroxide pasted into the grid openings. The negative plates are composed of a lead grid with spongy lead pasted into the grid openings.
The plates are submerged in a liquid electrolyte solution of diluted sulphuric acid.

https://tractormanualz.com/

Connector - Overview Wiring Harness Hood

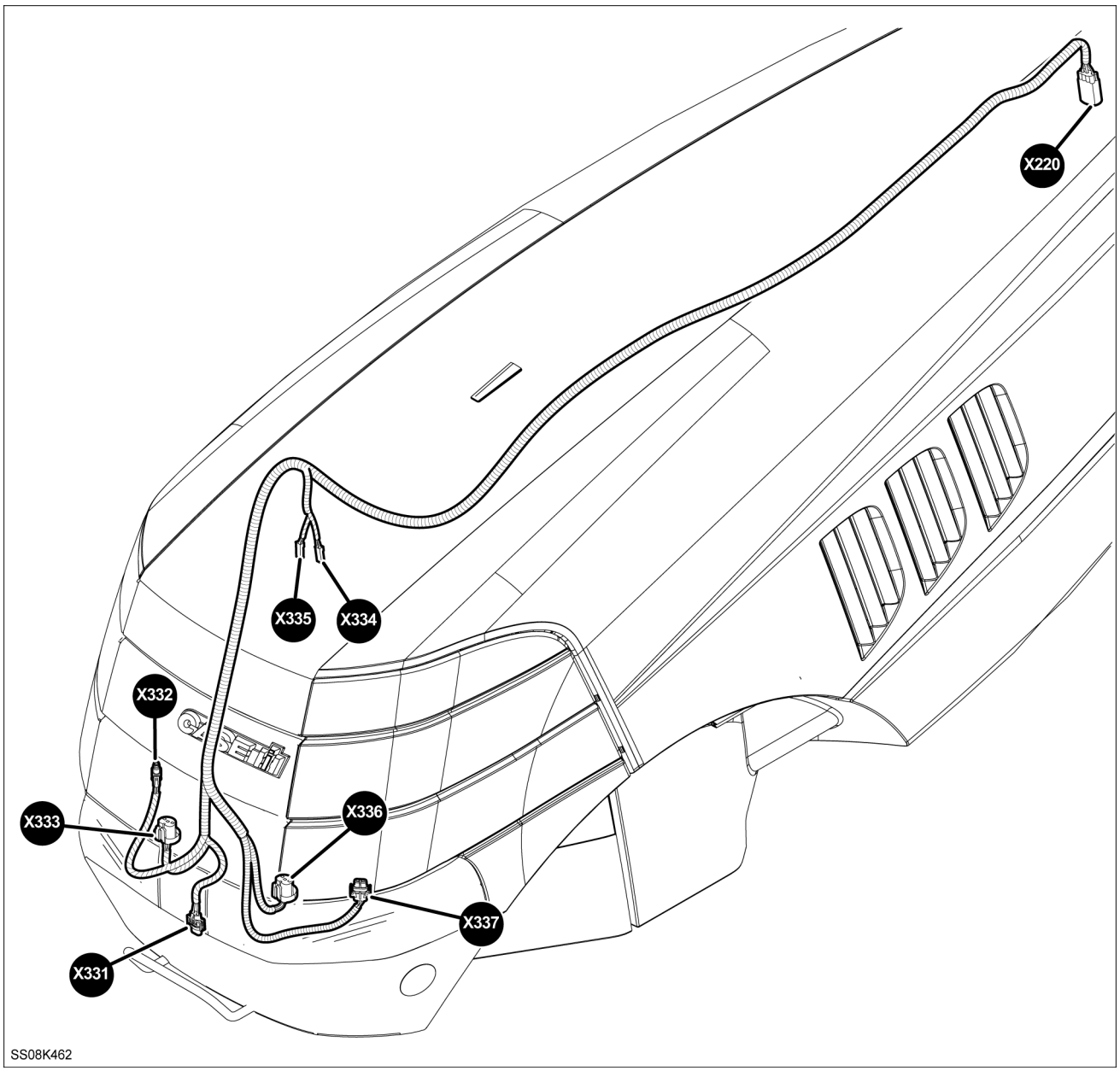

SS08K462 1

Con.	Description	Con.	Description
X220	Front Lamps	**X331**	Worklamp Right Hand
X332	Corner Lamp Right Hand	**X333**	Headlamp Right Hand
X334	Horn	**X335**	Horn
X336	Headlamp Left Hand	**X337**	Corner Lamp Left Hand

https://tractormanualz.com/

Connector - Overview Wiring Harness Engine

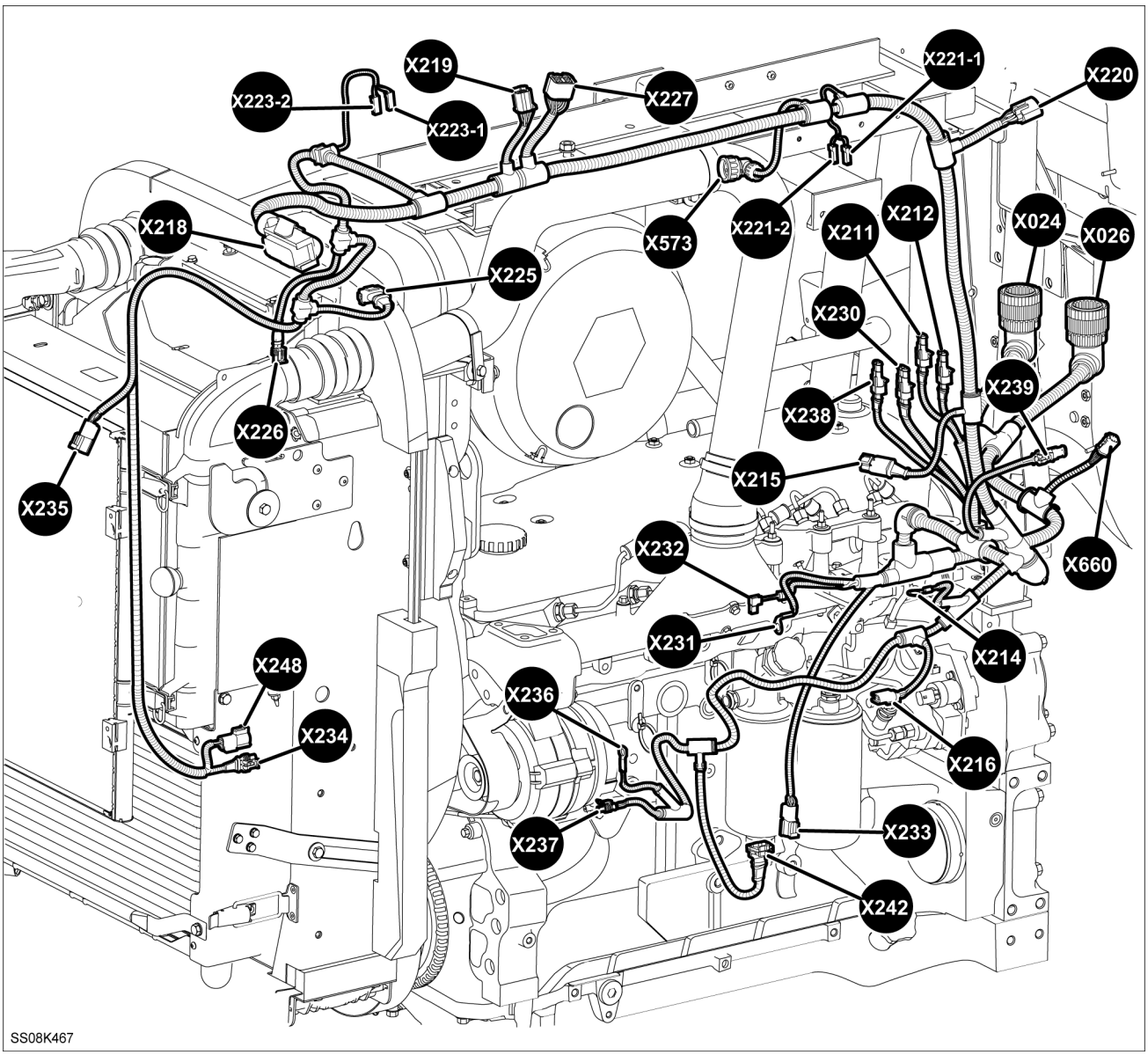

SS08K467 1

Con.	Description	Con.	Description
X024	Cab to Engine Main Connector E2	**X026**	Main Harness Connector - E1 - Engine to Cab
X211	Loader Valve Option A	**X212**	Loader Valve Option B
X214	Earth Point - Electronic Module	**X215**	Grid Heater Relay
X216	Fuel Heater Relay	**X218**	Engine Module Bosch EDC 16
X219	Visctronic Fan	**X220**	Front Lamps
X221	Brake Fluid Level (1/2)	**X223**	Air Cleaner Switch (1/2)
X225	A/C Pressure Switch	**X226**	A/C Clutch
X227	Front Hitch and Front PTO	**X230**	D.I.A Engine Inline
X231	Starter Solenoid B+	**X232**	Starter Solenoid 1
X233	Radar Gun	**X234**	Front Axle (Self Level)
X235	Steering Angle Sensor	**X236**	Alternator B+
X237	Alternator D+	**X238**	Battery Isolator
X239	Reversible Fan	**X242**	Water in Fuel Sensor
X248	Suspension Accelerometer	**X573**	Exhaust Brake Solenoid
X660	ISO Implement Connector		

https://tractormanualz.com/

Wiring Harness IVECO Engine

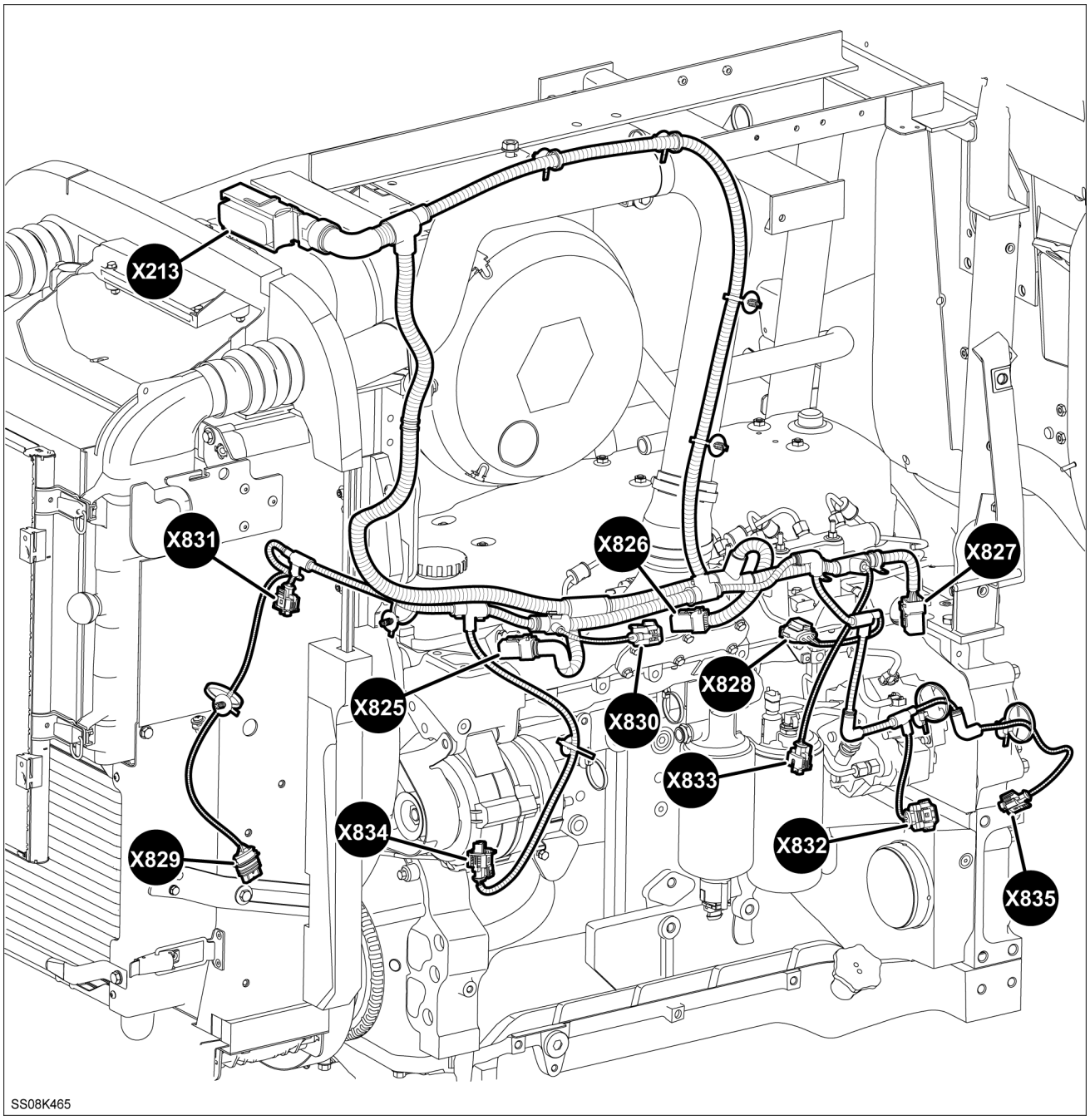

SS08K465 2

Con.	Description	Con.	Description
X213	Engine Control Unit A	**X825**	Injector Cylinder 1 & 2 (EDC16)
X826	Injector Cylinder 3 & 4 (EDC16)	**X827**	Injector Cylinder 5 & 6 (EDC16)
X828	Boost Pressure / Temperature Sensor (EDC16)	**X829**	Oil Pressure / Temperature Sensor (EDC16)
X830	Rail Pressure Sensor (EDC16)	**X831**	Coolant Temperature Sensor
X832	Fuel Temperature Sensor	**X833**	High Pressure Pump
X834	Increment Speed Sensor	**X835**	Camshaft Speed Sensor

https://tractormanualz.com/

Connector - Overview Wiring Harness Drive Line

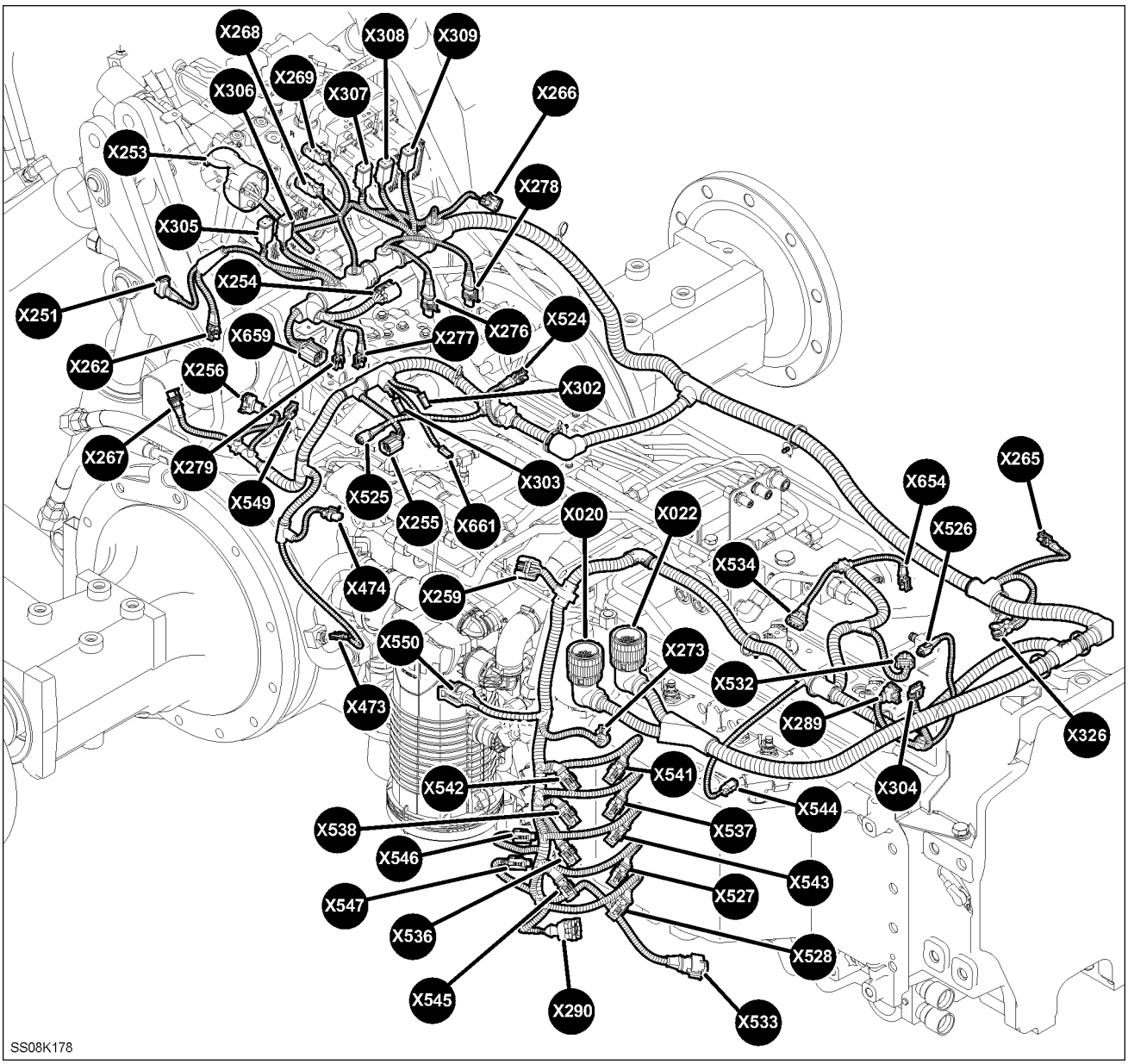

SS08K178 1

Con.	Description	Con.	Description
X020	Extension Harness Connector 2 (Cab)	**X022**	Extension Harness Connector 1 (Electronic)
X251	PTO Speed Sensor	**X253**	Trailer Socket
X254	Trailer Brakes - Air	**X255**	Trailer Brakes Hydraulic
X256	Draft Pin Right Hand	**X259**	Front Suspension Connector
X262	PTO Twist Sensor	**X265**	Fuel Tank Sensor
X266	Draft Pin Left Hand	**X267**	Rock Shaft Potentiometer
X268	EDC Valve Raise	**X269**	EDC Valve Lower
X273	Transmission Oil Pressure Sensor	**X276**	Diff. Lock Solenoid
X277	Rear PTO Brake Solenoid	**X278**	Rear PTO Solenoid
X279	4WD Solenoid	**X289**	Fly Wheel Speed Sensor
X290	Trans Oil Temperatur Sensor	**X302**	Power Steering Pressure Switch Pin 2
X303	Power Steering Pressure Switch Pin 1	**X304**	CAN Terminator Resistor
X305	EHR Valve Connector 1	**X306**	EHR Valve Connector 2
X307	EHR Valve Connector 3	**X308**	EHR Valve Connector 4
X309	EHR Valve Connector 5	**X326**	Earth Transmission

https://tractormanualz.com/

Con.	Description	Con.	Description
X473	Low Hydro Charge Switch	**X474**	Hydraulic Filter Blocked (Vacuum Switch)
X524	Output Wheel Speed Sensor	**X525**	Hydrostat Input Speed Sensor
X526	Ring Speed Sensor	**X527**	Clutch Solenoid A
X528	Clutch Solenoid B	**X532**	Potentiometer Synchroniser F1 - F3
X533	Potentiometer Synchroniser F2 - R1	**X534**	Potentiometer Synchroniser F4 - R2
X536	Solenoid Valve R1	**X537**	Solenoid Valve F1
X538	Solenoid Valve F3	**X541**	Solenoid Valve R2
X542	Solenoid Valve F4	**X543**	Solenoid Valve F2
X544	Solenoid Valve Hydrostat 1	**X545**	Solenoid Valve Dump
X546	A Clutch Pressure Sensor	**X547**	B Clutch Pressure Sensor
X549	Brake Pressure Sensor	**X550**	Vane Pump Pressure Sensor
X654	Brake Lubrication Control Solenoid	**X659**	Link Level (External Connection)
X661	High Flow Pump (detection)		

https://tractormanualz.com/

Connector - Overview Wiring Harness Main Cab

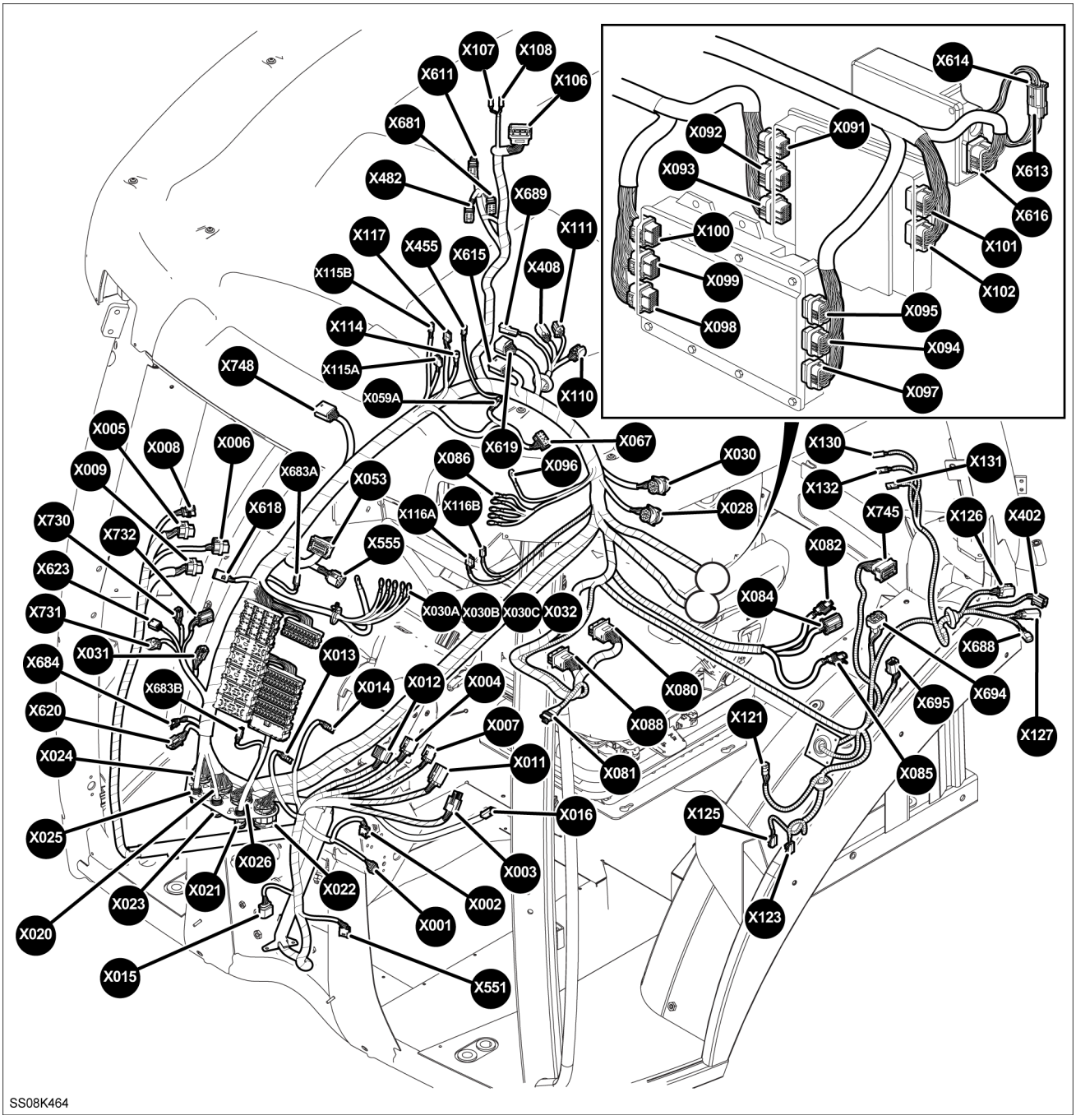

SS08K464 1

Con.	Description	Con.	Description
X001	Clutch Switch	**X002**	Clutch Potentiometer
X003	Starter Switch	**X004**	Main Light Switch
X005	Instrument Cluster Unit CN1	**X006**	Instrument Cluster Unit CN2
X007	Hazard Switch Harness	**X008**	Key Pad
X009	Instrument Cluster Unit CN3	**X011**	Front and Rear Wiper Switch
X012	Shuttle Lever	**X013**	Stop Lamp Switch Left
X014	Stop Lamp Switch Right	**X015**	Foot Throttle
X016	Brake Pedals Latched Switch	**X020**	Extension Harness Connector 2 (Cab)
X021	Main Power (Fuse) 1 Power B+	**X022**	Extension Harness Connector 1 (Electronic)
X023	Main Power (Fuse) 2 Power E	**X024**	Cab to Engine Main Connector E2
X025	Main Power (Fuse) 3 Power B-	**X026**	Main Harness Connector - E1 - Engine to Cab
X028	Diagnostic Connector 2	**X030**	Diagnostic Connector

https://tractormanualz.com/

Con.	Description	Con.	Description
X030A	Earth Header 2	**X030B**	Earth Header 2
X030C	Earth Header 2	**X031**	ADIC Diagnostic Connector
X032A	Earth Header 2	**X032B**	Earth Header 2
X053	Flasher ECU	**X059A**	Lever Mounted PTO Brake Switch
X067	Rear PTO Brake Switch	**X080**	Armrest 1
X081	Seat Connector	**X082**	Loader Power
X084	Loader Valve 2	**X085**	Loader Valve 1
X086A	Earth Header 1	**X086B**	Earth Header 1
X086C	Earth Header 1	**X086D**	Earth Header 1
X088	Armrest 2	**X091**	CCM Central Control Unit (CN2)
X092	CCM Central Control Unit (CN1a)	**X093**	CCM Central Control Unit (CN1b)
X094	CCM Central Control Unit (CN3a)	**X095**	CCM Central Control Unit (CN3b)
X096	Case Earth CCM & ACU	**X097**	CCM Central Control Unit (CN4)
X098	ACU Auxiliary Control Unit (CN2)	**X099**	ACU Auxiliary Control Unit (CN1a)
X100	ACU Auxiliary Control Unit (CN1b)	**X101**	ACU Auxiliary Control Unit (CN3b)
X102	ACU Auxiliary Control Unit (CN3a)	**X106**	Roof to Cab Harness - Roof
X107	Aux Headlamp Switch	**X108**	Aux Headlamp Switch
X110	Right Hand Fender Connector 2 HPL Raise/Lower Switch	**X111**	Right Hand Fender Connector 1 Tail Lamp
X114	ISO 11786 Signal Socket	**X115A**	30A Power Socket Positiv
X115B	30A Power Socket Negativ	**X116A**	Rear Power Socket Implement Positive
X116B	Rear Power Socket Implement Negative	**X117**	Power Studs
X121	Hand Brake	**X123**	Washer Motor Rear
X125	Washer Motor Front	**X126**	Left Hand Fender Connector 1 Tail Lamp
X127	Left Hand Fender Connector 2 HPL Raise/Lower Switch	**X130**	Cigar Lighter (Illumination)
X131	Cigar Lighter (Power)	**X132**	8 Amp Socket
X402	Rear Fender 3rd Remote Left	**X408**	Rear Fender 3rd Remote Right
X455	Rev. Alarm H58	**X482**	Battery Isolator Control Switch
X551	Exhaust Brake Switch	**X555**	Additional Roof Headlamps
X611	Heated Mirror Switch	**X613**	TECU Power In/Out
X614	TECU By-Pass	**X615**	TECU VT / SWCD Input
X616	TECU Unit - CN1	**X618**	ISO BUS CAN Extension
X619	TECU VT / SWCD Output	**X620**	Front Break Away (Option)
X623	Fast Steer Connector	**X681**	Hydraulics Master Switch
X683A	Heated Screen B+	**X683B**	Heated Screen D+
X684	Front Hitch Detect	**X688**	Extremity Lamp Left Hand
X689	Extremity Lamp Right Hand	**X694**	Air Con Power
X695	Air Con Control	**X730**	Multi Control Option
X731	Multi Control Option	**X732**	Can Dog Power
X745	Electronic Park Brake Interface Connector	**X748**	Electric Shift PTO

https://tractormanualz.com/

Connector - Overview Wiring Harness Fender

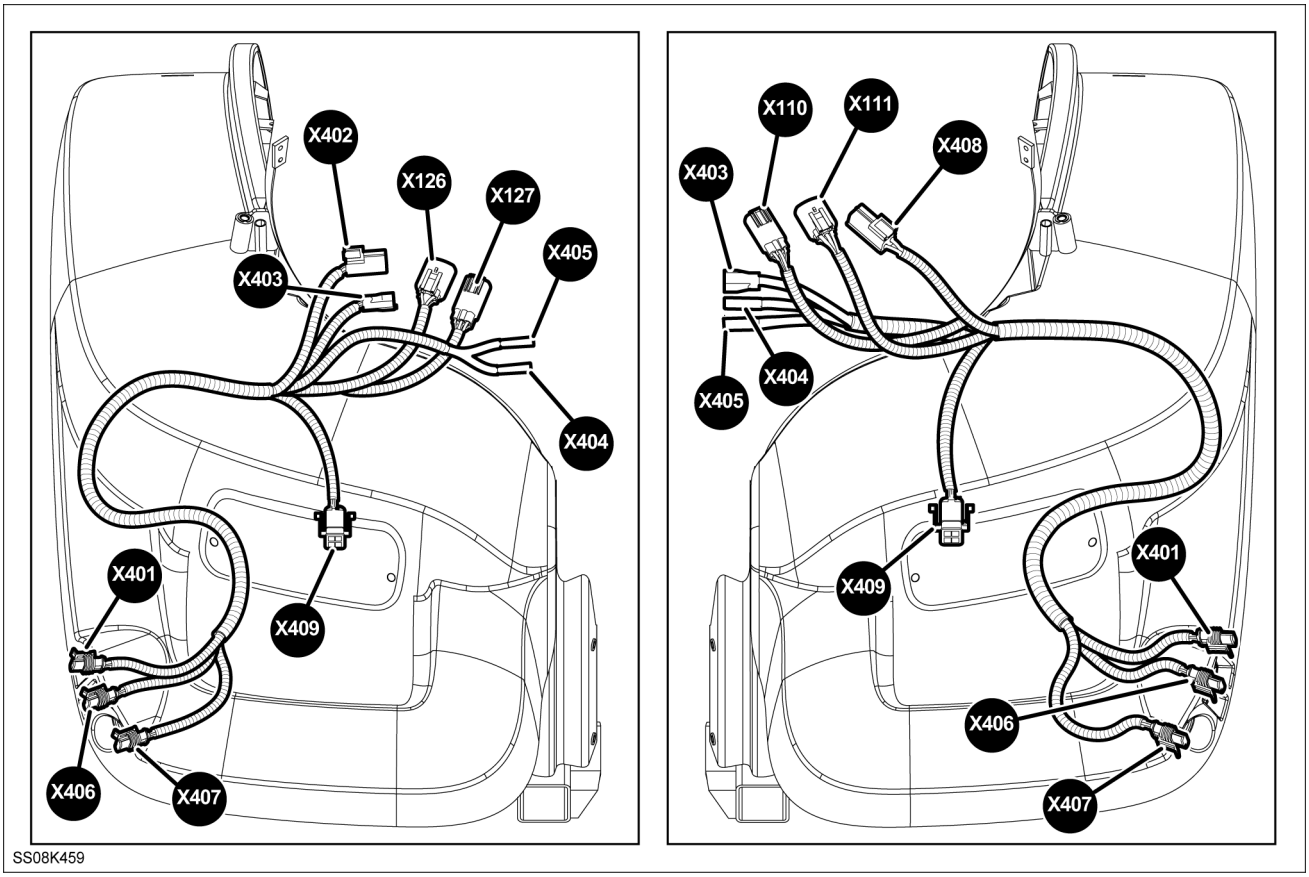

SS08K459 1

Con.	Description	Con.	Description
X110	Right Hand Fender Connector 2 HPL Raise/Lower Switch	**X111**	Right Hand Fender Connector 1 Tail Lamp
X126	Left Hand Fender Connector 1 Tail Lamp	**X127**	Left Hand Fender Connector 2 HPL Raise/Lower Switch
X401	EHR 3 Switch Fender Right and Left	**X402**	Rear Fender 3rd Remote Left
X403	Worklamp C - Pillar Right and Left	**X404**	License Lamp Right and Left
X405	License Lamp Right and Left	**X406**	Rear PTO Switch Right and Left
X407	HPL Switch Right and Left	**X408**	Rear Fender 3rd Remote Right
X409	Stop Tail Light Right and Left (LMP-018)		

https://tractormanualz.com/

Connector - Overview Wiring Harness Roof

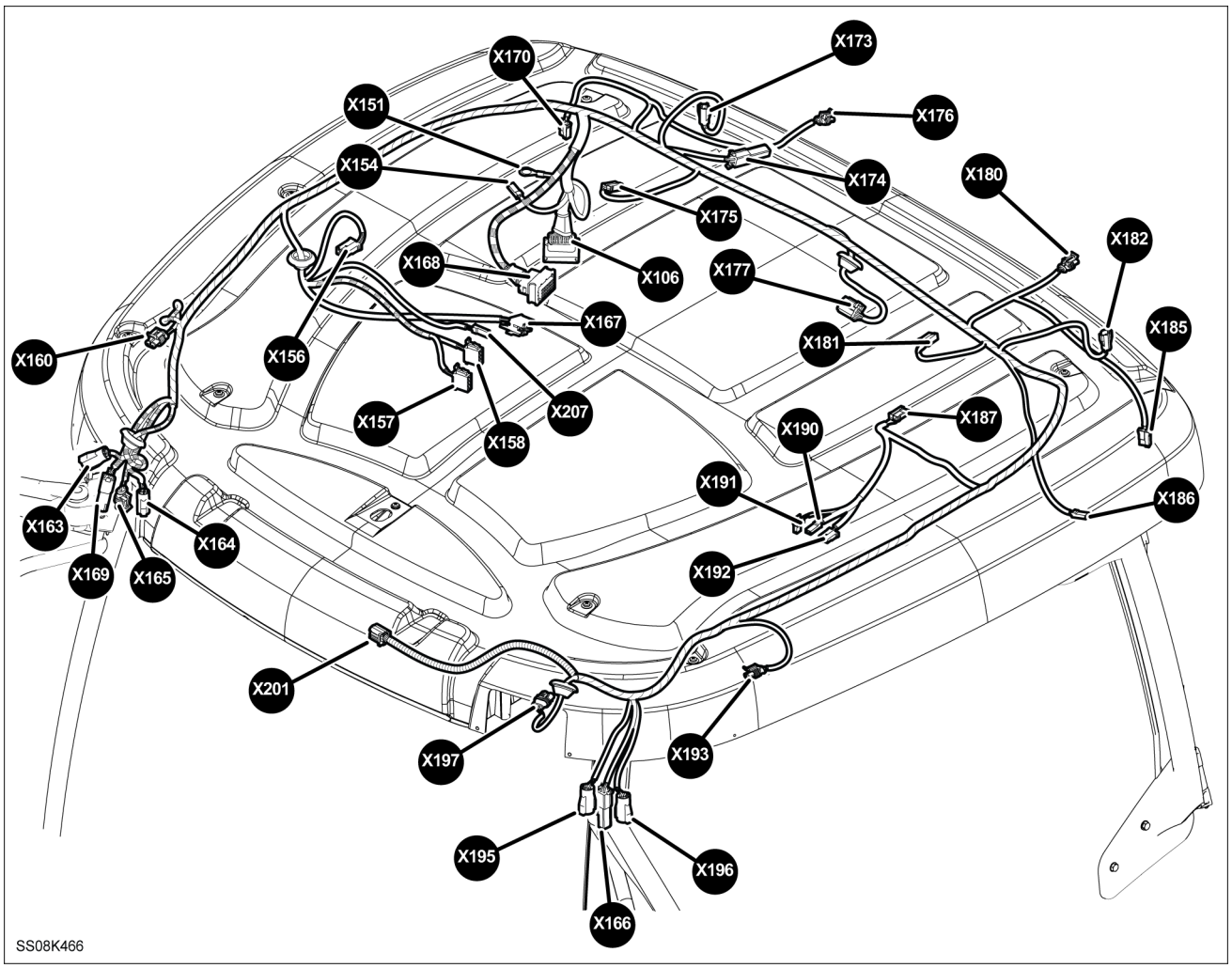

SS08K466 1

Con.	Description	Con.	Description
X106	Roof to Cab Harness - Roof	**X151**	Roof Earth
X154	not used	**X156**	Console Lamp Right Hand
X157	Radio 2	**X158**	Radio 1
X160	not used	**X163**	Grabrail Side lamp Right Hand
X164	Worklamp Grabrail Right Hand Front	**X165**	Worklamp Roof Front Left Hand 2
X166	Electric Mirror Left Hand	**X167**	Mirror Control
X168	Worklamps ECU	**X169**	Electric Mirror Right Hand
X170	Rotating Beacon Right Hand	**X171**	not used
X173	Worklamp Rear Right	**X174**	Licence Plate Diode
X175	Radio Speaker Right Hand Rear	**X176**	License Plate Right Hand
X177	Wiper Motor Rear	**X180**	Licence Plate Left Hand
X181	Radio Speaker Left Hand Rear	**X182**	Worklamp Left Rear
X184	not used	**X185**	Rotating Beacon Left Hand
X186	Door Switch Left Hand	**X187**	not used
X190	Interior Lamp A	**X191**	Interior Lamp B1
X192	Interior Lamp B2	**X193**	Puddle Lamp Left Hand
X195	Side Lamp Grabrail Left Hand	**X196**	Worklamp Grabrail Left Hand
X197	Worklamp Left Hand Front Upper	**X201**	Wiper Motor Front (Cab)
X207	Antenne Plus		

https://tractormanualz.com/

Connector - Component Diagram 00

X001 CLUTCH SWITCH

POS.	WIRE NUMBER	CIRCUIT REFERENCE
1	1001AH (W)	STARTER SOLENOID FEED
2	7425 (Y)	DRIVE SIGNAL
3	7660 (R)	TRANS CLUTCH DISCONNECT
4	1000 (W)	SAFETY START SWITCH SUPPLY

NOTE: *For the wiring color code refer to,* ***Wiring harness - Overview (A.30.A)****.*

SS08K077 1

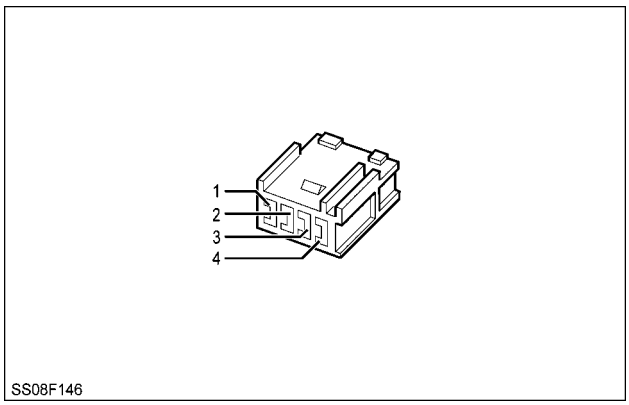

SS08F146 2

STEERING CONSOLE

X002 CLUTCH POTENTIOMETER

POS.	WIRE NUMBER	CIRCUIT REFERENCE
1	7525A (G)	TRANS SENSOR SUPPLY 5v
2	7430 (Y)	CLUTCH POSITION SIGNAL
3	60B (B/W)	SENSOR GROUND

NOTE: *For the wiring color code refer to,* ***Wiring harness - Overview (A.30.A)****.*

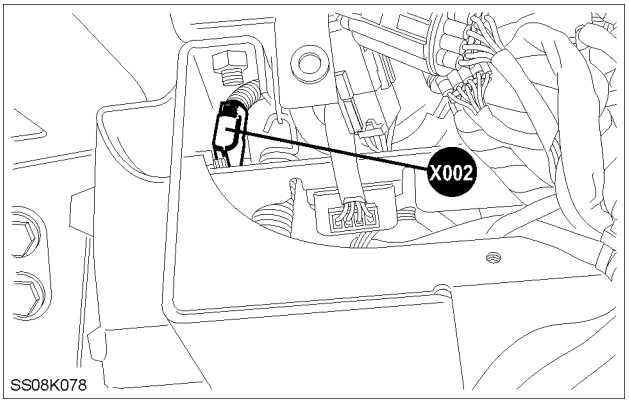

SS08K078 3

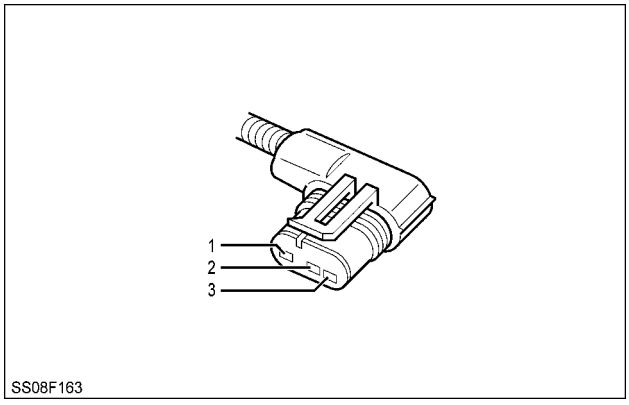

SS08F163 4

STEERING CONSOLE

https://tractormanualz.com/

X003 STARTER SWITCH

POS.	WIRE NUMBER	CIRCUIT REFERENCE
1	150A (N)	BATTERY FEED (UNFUSED)(ALL)
2	137 (W)	RADIO FEED
3	71 (W)	IGNITION SWITCHED FEEDS (UNFUSED)
4	1010 (G)	IGNITION RELAY (COIL)
6	1000 (W)	SAFETY START SWITCH SUPPLY

NOTE: *For the wiring color code refer to,* ***Wiring harness - Overview (A.30.A)****.*

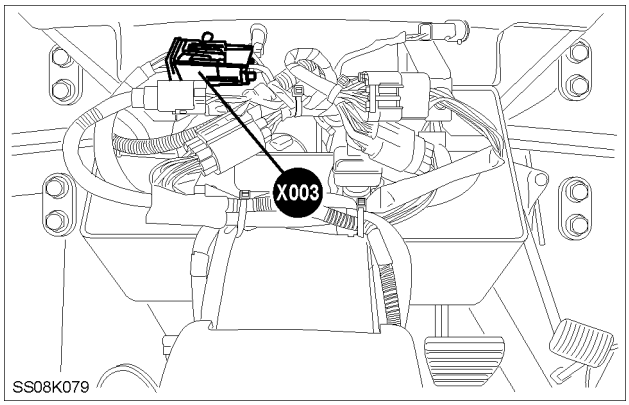

SS08K079 5

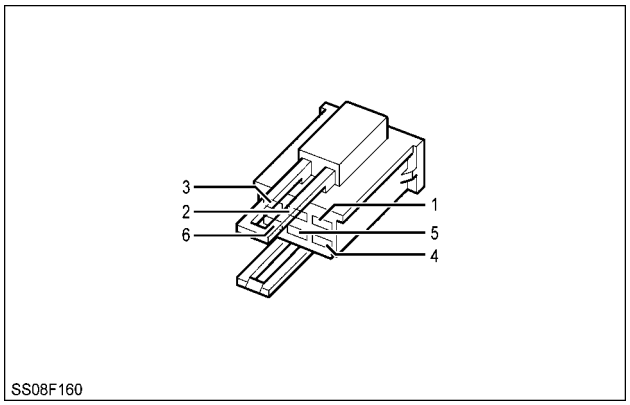

SS08F160 6

STEERING CONSOLE

X004 MAIN LIGHT SWITCH

POS.	WIRE NUMBER	CIRCUIT REFERENCE
1	150AA (N)	BATTERY FEED (UNFUSED)(ALL)
2	1024 (R)	RIGHT & LEFT HAND SIDELAMP FEED
3	1027D (U)	HEADLAMP MAIN BEAM
4	1030C (U)	HEADLAMP DIP BEAM
5	3000 (G)	FLASHER UNIT SUPPLY (TERMINAL 49)
6	376 (L)	HORN FEED
7	3001 (G)	LEFT HAND FLASHER CIRCUIT
8	3002 (G)	RIGHT HAND FLASHER CIRCUIT

NOTE: *For the wiring color code refer to,* ***Wiring harness - Overview (A.30.A)****.*

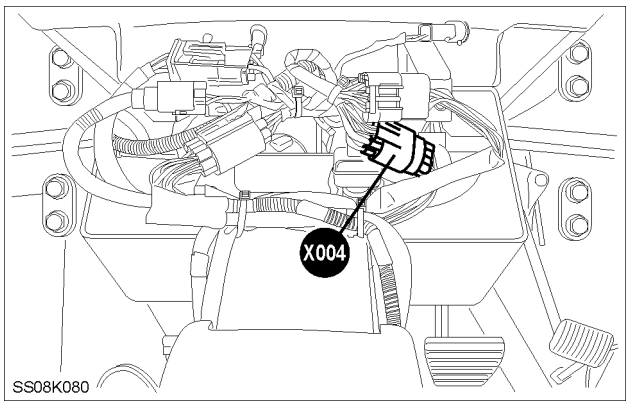

SS08K080 7

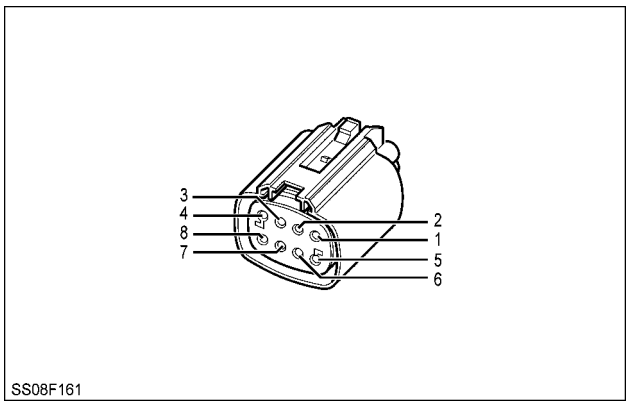

SS08F161 8

BEHIND STEERING CONSOLE

https://tractormanualz.com/

X005 INSTRUMENT CLUSTER UNIT CN1

POS.	WIRE NUMBER	CIRCUIT REFERENCE
1	3017 (G)	EPB SYSTEM FAILURE WARNING LIGHT
4	3016 (S)	BRAKE FLUID LEVEL SIGNAL
5	3005 (G)	LEFT HAND TURN SIGNAL WARNING LAMP
6	3004 (G)	RIGHT HAND TURN SIGNAL WARNING LAMP
8	7640Z (TN)	DIAGNOSTIC PLUG RS232 IN
9	7650Z (W)	DIAGNOSTIC PLUG RS232 OUT
11	1005 (S)	AIR CLEANER WARNING LAMP
12	7130 (N)	HYD FILTER WNG LP
14	1052 (Y)	GET U HOME LIGHTS RELAY
15	1012E (R)	ILLUMINATION
16	1001P (W)	STARTER SOLENOID FEED
19	2014A (G)	ENGINE OIL PRESSURE SENDER (+5 VOLT)
22	2095 (G)	INSTRUMENT SIGNAL GROUND
23	57BE (B)	EARTH (ALL)
24	160R (Y)	BATTERY SUPPLY ELECTRONICS
25	1006 (N)	ALTERNATOR WARNING LAMP
26	9031A (L)	ADIC MEMORY B+

NOTE: *For the wiring color code refer to,* ***Wiring harness - Overview (A.30.A)****.*

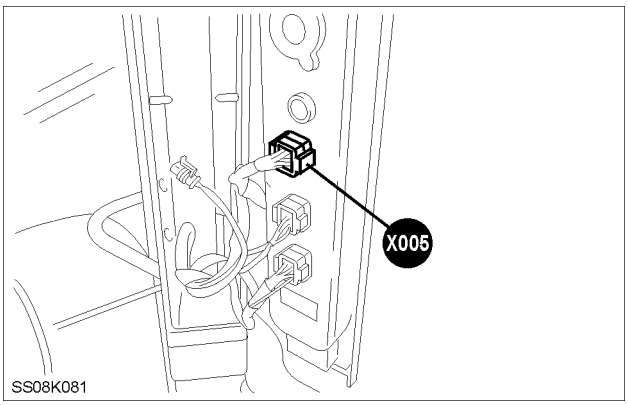

SS08K081 9

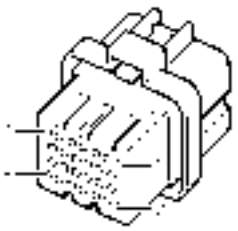

BRI4416B-02 10

BEHIND INSTRUMENT CLUSTER

https://tractormanualz.com/

X006 INSTRUMENT CLUSTER UNIT CN2

POS.	WIRE NUMBER	CIRCUIT REFERENCE
11	3062 (L)	IMPLEMENT SOCKET SWITCH
14	2330 (L)	PTO SPEED ISO11876 SKT.PIN#3
15	2320 (L)	TRUE GROUND SPEED ISO 11786 SKT.PIN#1
16	2300 (L)	THEORETICAL GROUND SPEED ISO 11786 SKT.PIN#2
17	2310 (L)	IN/OUT OF WORK-HPL MODE ISO11786 SKT.PIN#4

NOTE: *For the wiring color code refer to,* ***Wiring harness - Overview (A.30.A)****.*

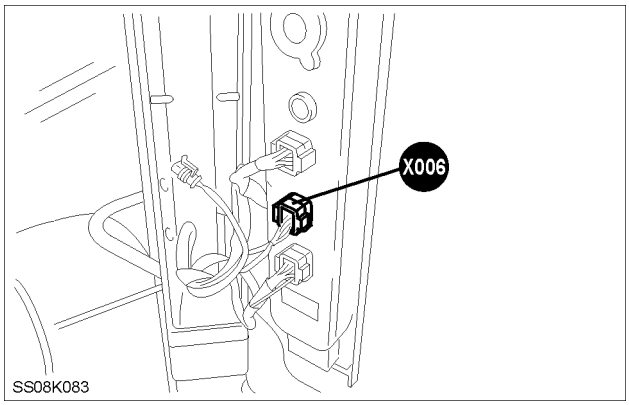

SS08K083 11

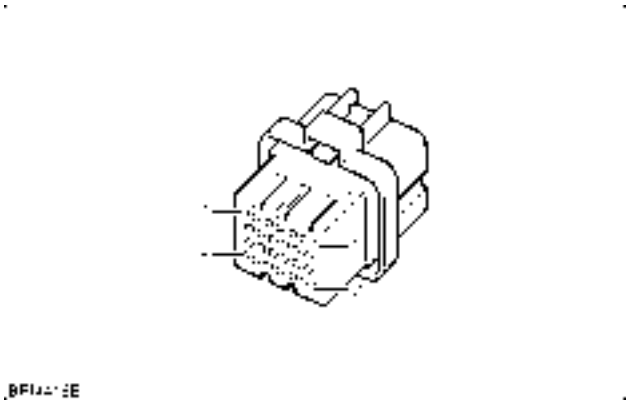

BRI4416B-03 12

BEHIND INSTRUMENT CLUSTER

X007 HAZARD SWITCH HARNESS

POS.	WIRE NUMBER	CIRCUIT REFERENCE
1	1021 (L) / 1021 (P)	HAZARD SWITCH SUPPLY (BATTERY)
2	1020A (G) / 1020A (G/W)	HAZARD SWITCH SUPPLY
3	57BF (B)	EARTH (ALL)
4	1020 (G) / 1020 (G/S)	HAZARD SWITCH SUPPLY

NOTE: *For the wiring color code refer to,* ***Wiring harness - Overview (A.30.A)****.*

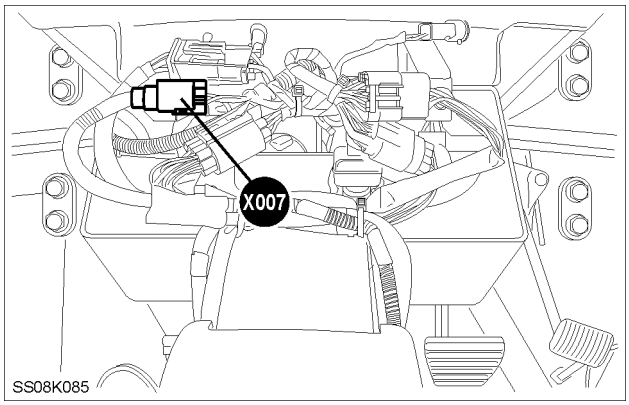

SS08K085 13

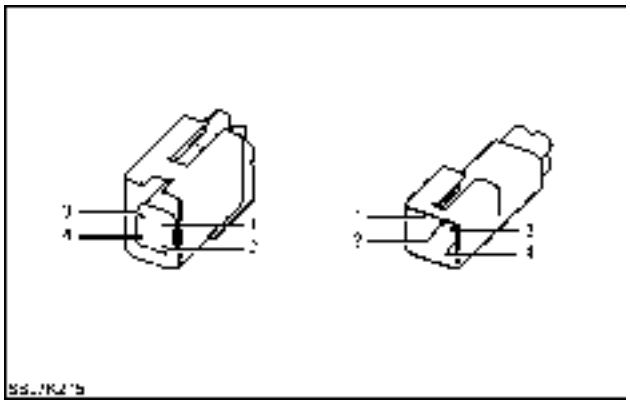

SS07K215 14

STEERING CONSOLE

https://tractormanualz.com/

X008 KEY PAD

POS.	WIRE NUMBER	CIRCUIT REFERENCE
1	1050F (G)	ACCESSORY FEED
2	5420H (G)	CAN L
3	5400A (Y)	CAN H
4	61H (B/O)	CASE GROUND

NOTE: *For the wiring color code refer to,* ***Wiring harness - Overview (A.30.A)****.*

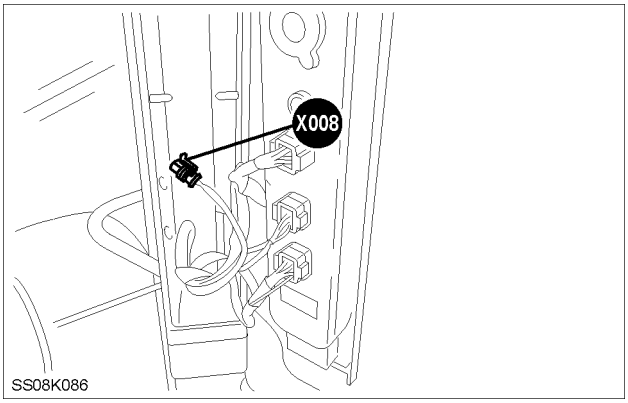

SS08K086 15

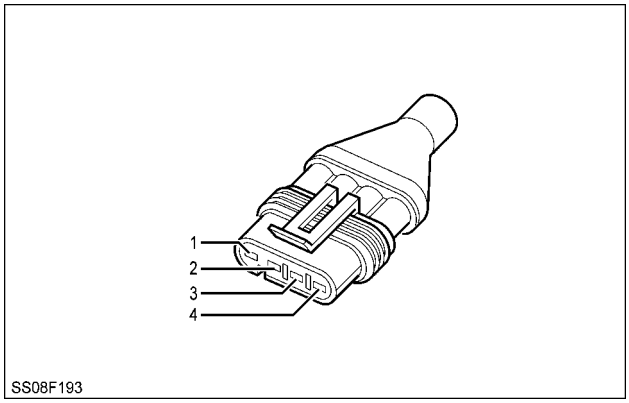

SS08F193 16

BEHIND INSTRUMENT CLUSTER

https://tractormanualz.com/

X009 INSTRUMENT CLUSTER UNIT CN3

POS.	WIRE NUMBER	CIRCUIT REFERENCE
2	7160 (R)	HYD LOW CHARGE WARNING
3	7135 (N)	HYD FILTER PRESSURE SWITCH
6	8020 (TN)	TRAILER BRAKE PRESSURE
7	3014A (R)	HANDBRAKE WARNING LAMP SIGNAL
9	2087 (O)	EXHAUST BRAKE SOLENOID
11	3052 (L)	DOME LAMP TO DOOR SWITCH
12	3500 (W)	POWER STEERING PRESSURE SIGNAL
13	1034 (LTG)	TURN SIGNAL WARNING LAMP (TERM C3)
14	29 (G)	MAIN FUEL SENDER SIGNAL
15	8010 (TN)	TRAILER BRAKE PRESSURE
16	1033 (LTG)	TURN SIGNAL WARNING LAMP (TERM C2)
17	7996 (R)	BRAKE PEDALS UNLATCHED SIGNAL
18	1026 (U)	HIGH BEAM INDICATOR LAMP
19	2200Z (G)	SERVICE MODE INITIATE
21	7155 (U)	VANE PUMP PRESSURE SENSOR SIGNAL
22	3120 (K)	STEERING SENSOR SIGNAL
25	5420G (G)	CAN L
26	5400G (Y)	CAN H

NOTE: *For the wiring color code refer to,* ***Wiring harness - Overview (A.30.A)****.*

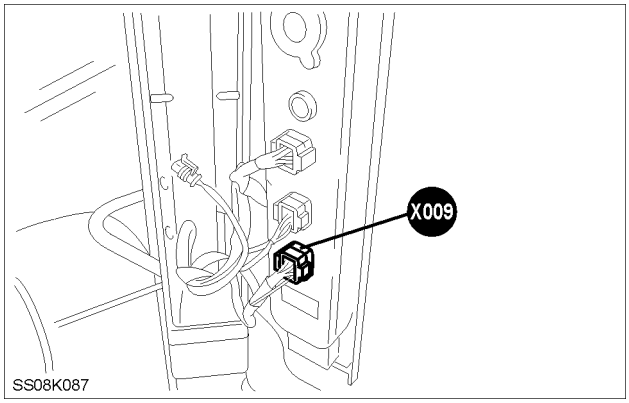

SS08K087 17

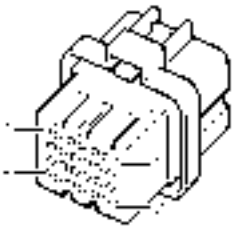

BRI4416B-02 18

BEHIND INSTRUMENT CLUSTER

https://tractormanualz.com/

Connector - Component diagram 01

X011 FRONT AND REAR WIPER SWITCH

POS.	WIRE NUMBER	CIRCUIT REFERENCE
1	1038A (TN)	WINDSHIELD WIPER FEED-REAR
2	57E (B)	EARTH (ALL)
3	587 (LTG)	WINDSHIELD WIPER INTERMITTENT DELAY
5	58 (R)	WIPER MOTOR-LOW
6	56 (W)	WIPER MOTOR-HIGH
7	1121 (G)	RR WINDSHIELD WASH
8	1119 (G)	RR WINDSHIELD WIPER
9	97 (LTG)	WINDSHIELD WASHER FEED
10	63 (U)	WIPER MOTOR-PARK FEED

NOTE: *For the wiring color code refer to,* ***Wiring harness - Overview (A.30.A)****.*

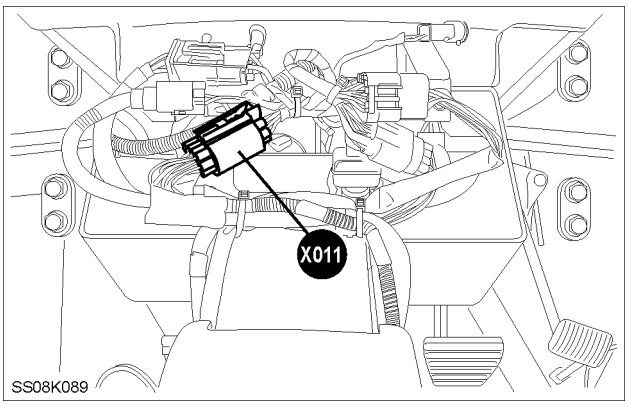

SS08K089 1

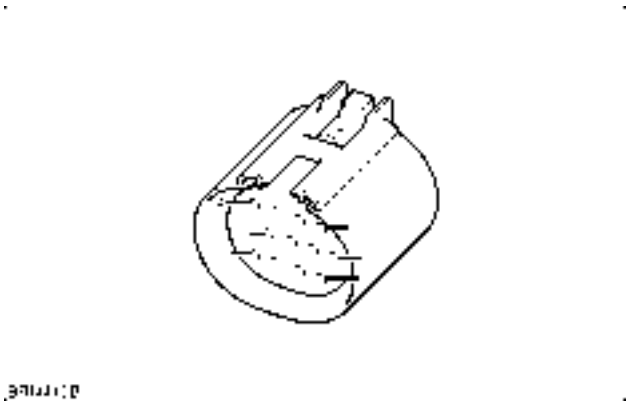

BRI4410B 2

STEERING CONSOLE

https://tractormanualz.com/

X012 SHUTTLE LEVER

POS.	WIRE NUMBER	CIRCUIT REFERENCE
1	7525C (G)	TRANS SENSOR SUPPLY 5v
2	7250 (S)	TRANSMISSION FORWARD SIGNAL
3	7260 (S)	TRANSMISSION REVERSE SIGNAL
4	7295 (W)	DRIVE DISABLE SIGNAL
5	7000B (U)	TRANS CONTROL SUPPLY
6	7420A (Y)	TCM TO CLUTCH POSITION SWITCH
7	7425 (Y)	DRIVE SIGNAL
8	57SS (B)	EARTH (ALL)
9	3036 (O)	EPB SHUTTLE PARK SWITCH INPUT
10	3039 (U)	EPB SHUTTLE PARK SWITCH OUTPUT
11	7730 (TN)	NOT IN PARKLOCK
12	1001X (W)	STARTER SOLENOID FEED
13	1001AH (W)	STARTER SOLENOID FEED

NOTE: *For the wiring color code refer to,* ***Wiring harness - Overview (A.30.A)****.*

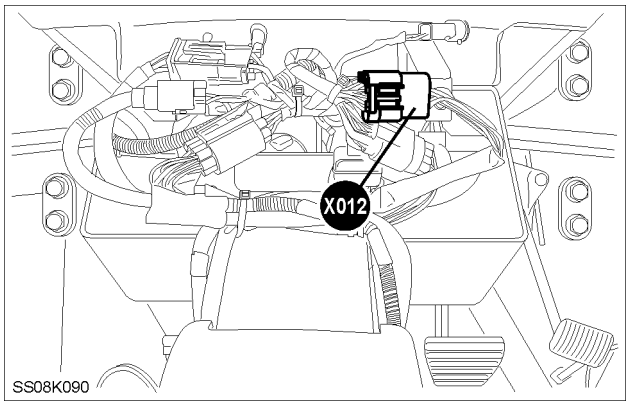

SS08K090 3

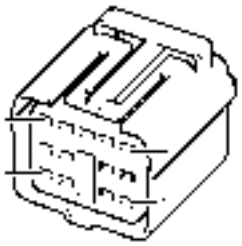

BRI4411B 4

STEERING CONSOLE

https://tractormanualz.com/

X013 STOP LAMP SWITCH LEFT

POS.	WIRE NUMBER	CIRCUIT REFERENCE
1	10B (G)	IGNITION SUPPLY
2	10A (G)	IGNITION SUPPLY
3	840A (G)	R & L STOPLAMP SIGNAL
4	820 (R)	STOPLAMP SWITCH LH

NOTE: *For the wiring color code refer to,* ***Wiring harness - Overview (A.30.A)****.*

SS08K091 5

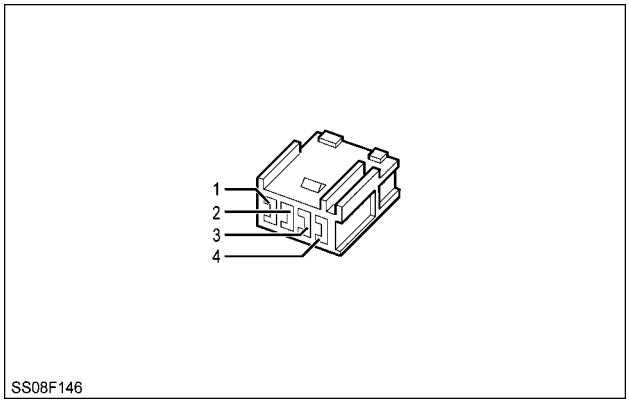

SS08F146 6

BEHIND STEERING CONSOLE

X014 STOP LAMP SWITCH RIGHT

POS.	WIRE NUMBER	CIRCUIT REFERENCE
1	10C (G)	IGNITION SUPPLY
2	10DG)	IGNITION SUPPLY
3	840 (G)	R & L STOPLAMP SIGNAL
4	830 (R)	STOPLAMP SWITCH RH

NOTE: *For the wiring color code refer to,* ***Wiring harness - Overview (A.30.A)****.*

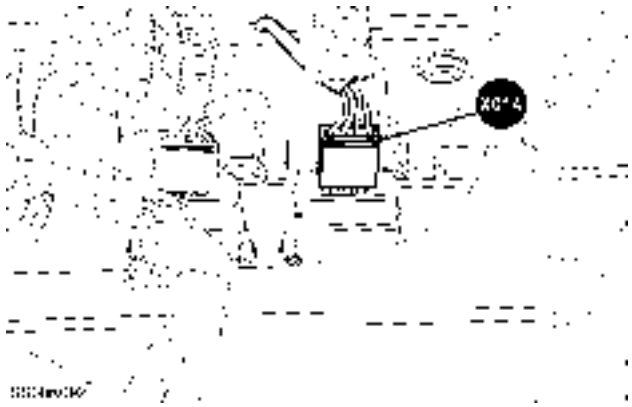

SS08K092 7

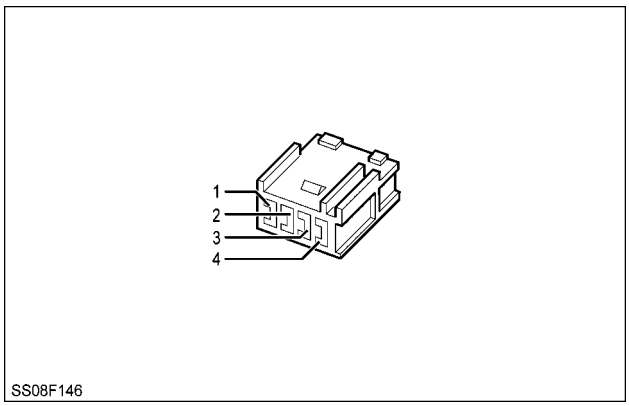

SS08F146 8

BEHIND STEERING CONSOLE

https://tractormanualz.com/

X015 FOOT THROTTLE

POS.	WIRE NUMBER	CIRCUIT REFERENCE
2	6402 (G)	ECU TO THROTTLE POT. VAR
3	7000L (U)	TRANS CONTROL SUPPLY
4	6355B (R)	+5V LOW POWER REFERENCE
6	6404 (G)	THROTTLE POT. TO LOW IDLE SWITCH
7	60BL (B/W)	SENSOR GROUND
8	60BM (B/W)	SENSOR GROUND

NOTE: *For the wiring color code refer to,* ***Wiring harness - Overview (A.30.A)****.*

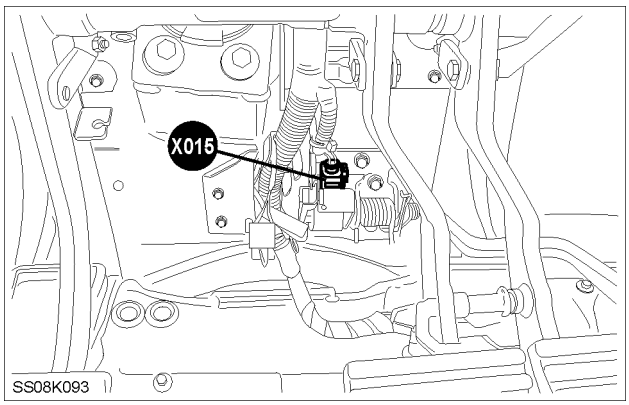

SS08K093 9

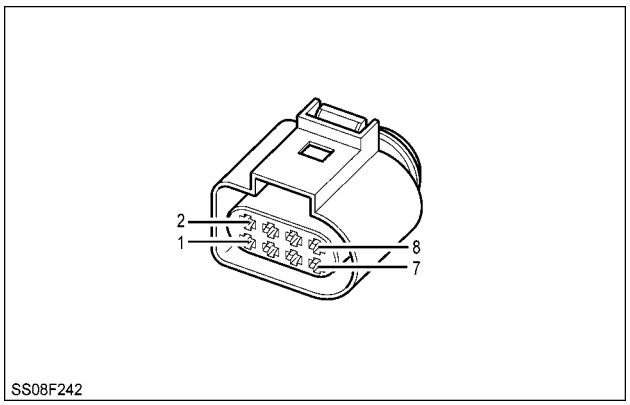

SS08F242 10

BASE STEERING CONSOLE

X016 BRAKE PEDALS LATCHED SWITCH

POS.	WIRE NUMBER	CIRCUIT REFERENCE
1	10L (G)	IGNITION SUPPLY
2	7996 (R)	BRAKE PEDALS UNLATCHED SIGNAL

NOTE: *For the wiring color code refer to,* ***Wiring harness - Overview (A.30.A)****.*

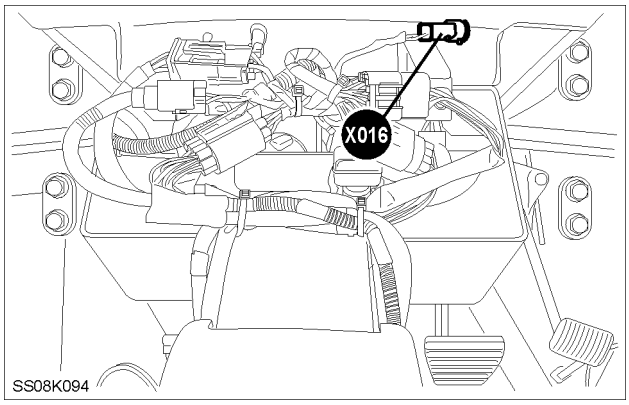

SS08K094 11

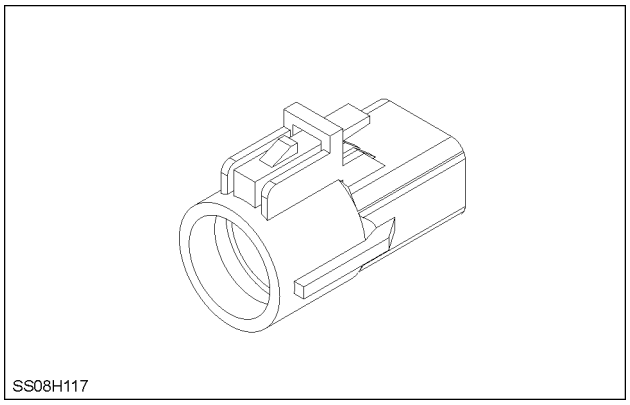

SS08H117 12

STEERING CONSOLE

https://tractormanualz.com/

Connector - Component diagram 02

X020 EXTENSION HARNESS CONNECTOR 2 (CAB)

POS.	WIRE NUMBER	CIRCUIT REFERENCE
1	29 (G)	MAIN FUEL SENDER SIGNAL
2	1013D (R) / 1013D (N)	RIGHT HAND LAMPS
3	1014E (R) / 1014E (B)	LEFT HAND LAMPS
4	810A (G) / 810A (R)	STOPLAMPS
5	349 (TN) / 349 (G)	TRAILER TURN LAMPS RH
6	350 (TN) / 350 (Y)	TRAILER TURN LAMPS LH
7	7925 (L)	TCM CLUTCH C RETURN
8	3286 (TN)	SUSPENSION LOCKOUT SOLENOID LOWER RETURN (-)
9	7160 (R)	HYD LOW CHARGE WARNING
10	3281 (TN)	SUSPENSION LOCKOUT SOLENOID UPPER RETURN (-)
11	2055A (W) / -	PTO SYNCHRO GROUND SPEED ENGAGED
12	2095B (G)	INSTRUMENT SIGNAL GROUND
13	3270 (O)	LOWER SOLENOID RET
14	3250 (O)	RAISE SOLENOID RET
15	7407 (K)	HYDROSTAT 1 SOLENOID +
16	3240 (O)	RAISE SOLENOID PWR
18	3260 (O)	LOWER SOLENOID PWR
19	7408 (L)	HYDROSTAT 1 SOLENOID GND
20	8010A (TN)	TRAILER BRAKE PRESSURE
21	8000A (N)	TRAILER BRAKE SOLENOID
22	8000X (N)	TRAILER BRAKE SOLENOID
23	3280 (O)	SUSPENSION LOCKOUT SOLENOID UPPER
24	8010 (TN)	TRAILER BRAKE PRESSURE
25	60A (B/W)	SENSOR GROUND
26	8020 (TN)	TRAILER BRAKE PRESSURE
27	8060D (U)	TRAILER BRAKE SUPPLY
28	3500 (W)	POWER STEERING PRESSURE SIGNAL
29	3285 (TN)	SUSPENSION LOCKOUT SOLENOID LOWER
30	5515 (S)	EHR +12V IGN.
31	5500V (R) / 5500L (R)	EHR CAN HIGH
32	5510V (U) / 5510L (U)	EHR CAN LOW
33	4055 (W)	LINK LEVEL TOP LINK EXTEND SOLENOID
34	4056 (W)	LINK LEVEL TOP LINK RETRACT SOLENOID
35	4057 (W)	LINK LEVEL RIGHT LINK RAISE SOLENOID
36	4058 (W)	LINK LEVEL RIGHT LINK LOWER SOLENOID
37	7135 (N) / -	HYD FILTER PRESSURE SWITCH
38	4054 (W)	LINK LEVEL DUMP SOLENOID
39	5830 (R) / 5830 (U)	HIGH FLOW PUMP LINK
40	5900F (Y) / 5900B (Y)	ISO BUS CAN SIGNAL LOW
41	5910F (G) / 5910B (G)	ISO BUS CAN SIGNAL HIGH
42	5915F (B) / 5915B (B)	ISO BUS CAN SUPPLY GROUND
43	5920F (R) / 5920B (R)	ISO BUS CAN SUPPLY POSITIVE
44	5970A (O)	ISO BUS ECU SIGNAL
45	5980 (U)	ISO BUS IMPLEMENT SIGNAL
46	7411 (Y)	TRANS HYDROSTAT INPUT SPEED SENSOR (CVT)
47	7970 (L)	TRANS MED/REV
48	7130 (N)	HYD FILTER WNG LP
49	8070 (L)	TRAILER PARK BRAKE SOLENOID
50	2250N (K) / -	PTO FRONT - SUPPLY
51	2012 (Y)	TRANS OIL PRESSURE WARNING LAMP

https://tractormanualz.com/

NOTE: *For the wiring color code refer to,* ***Wiring harness - Overview (A.30.A)****.*

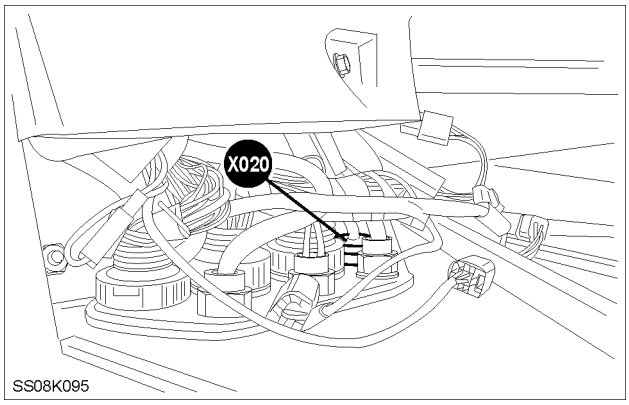

SS08K095 1

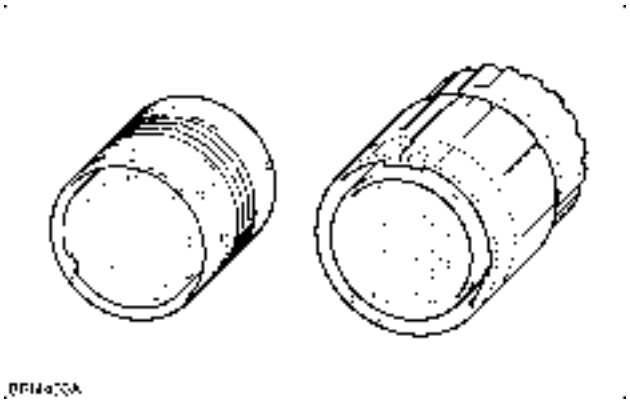

BRI4400B-03 2

FRONT RIGHT HAND CAB FLOOR

X021 MAIN POWER (FUSE) 1 POWER B+

POS.	WIRE NUMBER	CIRCUIT REFERENCE
1	1 (R)	BATTERY SUPPLY

NOTE: *For the wiring color code refer to,* ***Wiring harness - Overview (A.30.A)****.*

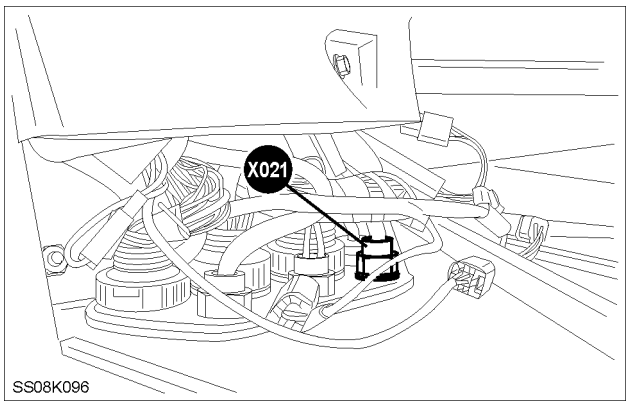

SS08K096 3

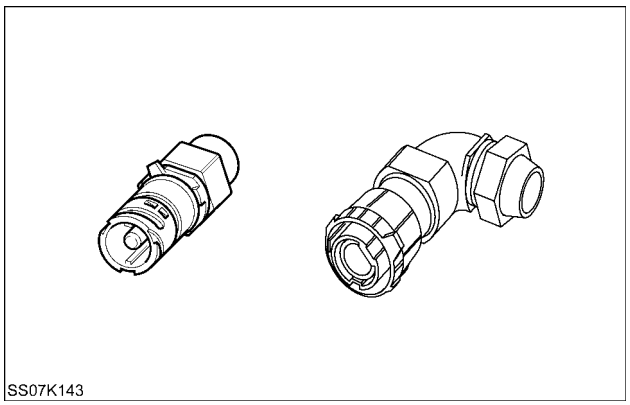

SS07K143 4

FRONT RIGHT HAND CAB FLOOR

X022 EXTENSION HARNESS CONNECTOR 1 (ELECTRONIC)

POS.	WIRE NUMBER	CIRCUIT REFERENCE
1	3024 (Y)	2WD SOLENOID
2	7584 (U) / 7584 (R)	PARKLOCK SENSOR SWITCH SIGNAL
3	7080 (LTG)	DIFF-LOCK SOLENOID FEED
4	2130 (N)	PTO BRAKE SOLENOID
5	2051 (O)	PTO SOLENOID RETURN (-)
6	2042 (O)	PTO SOLENOID-REAR
7	2140 (O)	PTO SPEED SENSOR
8	2062 (W)	PTO TWIST SENSOR
9	7910 (TQ)	CLUTCH 'B' SIGNAL
10	7935 (L)	TCM CLUTCH D RETURN
11	7401 (L)	TRANS RPM SPEED SENSOR
12	7400 (Y)	TRANS RPM SPEED SENSOR TO TCM INPUT
13	7155 (U)	VANE PUMP PRESSURE SENSOR SIGNAL
14	7930 (TQ)	CLUTCH 'D' SIGNAL
15	7940 (TQ)	CLUTCH 'E' SIGNAL

https://tractormanualz.com/

POS.	WIRE NUMBER	CIRCUIT REFERENCE
16	7960 (W)	TRANS SLOW/FAST
17	7431 (TQ)	SUPPLY
18	7915 (L)	TCM CLUTCH B RETURN
19	7000P (U)	TRANS CONTROL SUPPLY
20	7945 (L)	TCM CLUTCH E RETURN
21	9036 (TN)	50KPH DUMP SOLENOID RETURN
22	7225 (W)	TRANS HI RANGE SOL - RET
23	8045 (L) / -	TRANS REV SOL RET
24	7985 (G) / -	TRANS REVERSE RANGE
25	3295 (O)	FRONT SUSPENSION PRESSURE SWITCH SIGNAL
26	7235 (Y)	TRANS LOW RANGE SOL - RET
27	7785 (O) / 7785 (K)	A CLUTCH PRESSURE SIGNAL
28	7760 (W)	TORQUE SENSOR
29	9035 (TN)	50KPH DUMP SOLENOID
30	7586 (U)	PARKLOCK SOLENOID
31	7500 (G)	TRANS OIL TEMP. SENSOR
32	5097 (K)	EDC VALVE DOWN RETURN
33	5090 (K)	EDC VALVE DOWN
34	5087 (K)	EDC VALVE UP RETURN
35	5085 (K)	EDC VALVE UP
36	5070 (TN)	EDC LEFT PIN
37	5075 (K)	EDC VOLTAGE TO PINS
38	5065 (TN)	EDC RIGHT PIN
39	9033 (TN)	50KPH SOLENOID+
40	9034 (TN)	50KPH SOLENOID-
41	2014B (G)	ENGINE OIL PRESSURE SENDER (+5 VOLT)
42	7220 (S)	TRANSMISSION HIGH RANGE
43	7230 (S)	TRANSMISSION LOW RANGE
44	7900 (TQ)	CLUTCH 'A' SIGNAL
45	7775 (K) / 7775 (O)	B CLUTCH PRESSURE SIGNAL
46	5080 (K)	EDC ROCKSHAFT
47	5020A (TN)	EDC PROC +5V REF VOLTAGE DROP POSN/RATE
48	7920 (TQ)	CLUTCH 'C' SIGNAL
49	2050L (G) / 2050AV (G)	PTO SUPPLY / DOG SUPPLY
51	7589 (U)	BRAKE PRESSURE SIGNAL

NOTE: *For the wiring color code refer to,* ***Wiring harness - Overview (A.30.A)****.*

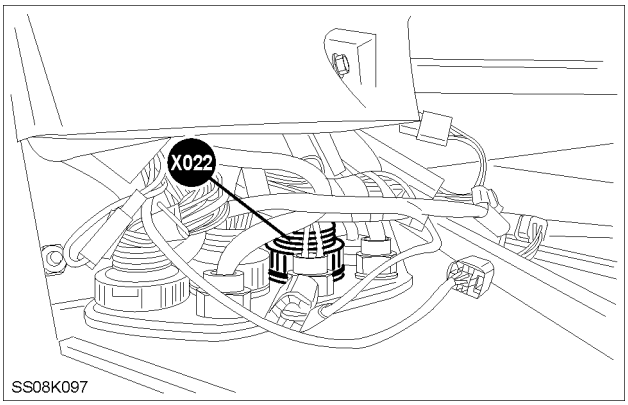

SS08K097 5

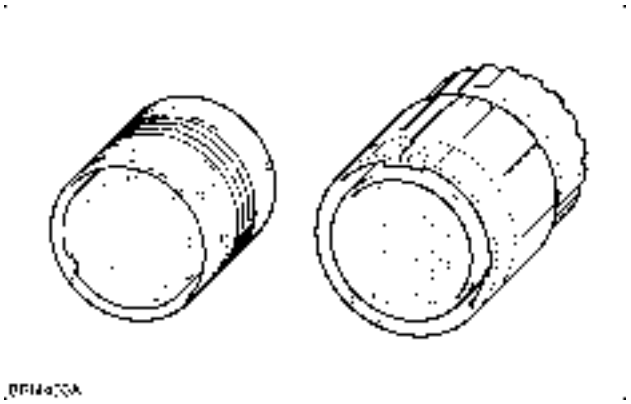

BRI4400B-03 6

FRONT RIGHT HAND CAB FLOOR

https://tractormanualz.com/

X023 MAIN POWER (FUSE) 2 POWER E

POS.	WIRE NUMBER	CIRCUIT REFERENCE
1	160 (U)	BATTERY SUPPLY ELECTRONICS
2	1C (R)	BATTERY SUPPLY

NOTE: *For the wiring color code refer to,* ***Wiring harness - Overview (A.30.A)****.*

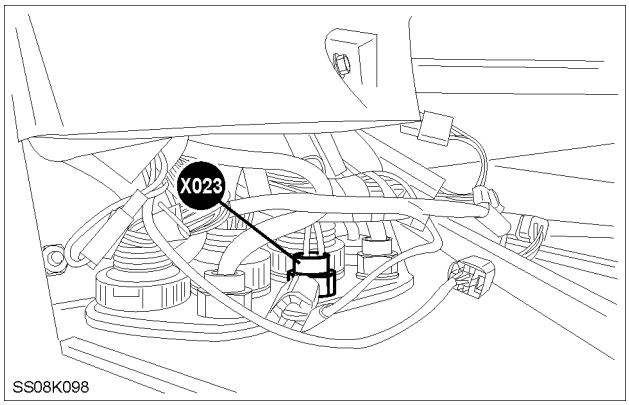

SS08K098 7

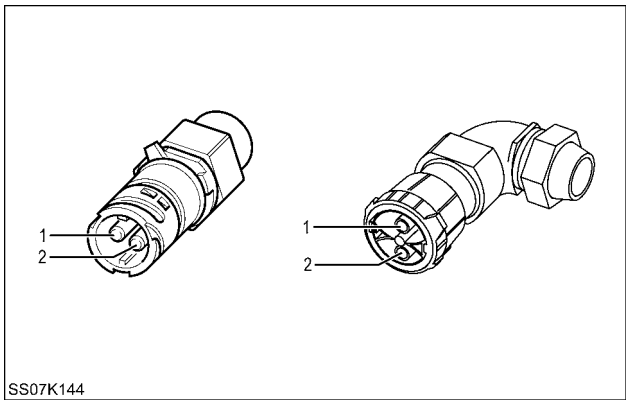

SS07K144 8

FRONT RIGHT HAND CAB FLOOR

X024 CAB TO ENGINE MAIN CONNECTOR E2

POS.	WIRE NUMBER	CIRCUIT REFERENCE
1	3272 (O)	LOADER VALVE #1 OUT
2	3273 (O)	LOADER VALVE #1 RETURN
3	3235 (O) / 3235 (TN)	ACCELEROMETER SIGNAL
4	2590 (TN)	EXTERNAL SWITCH FHPL UP
5	2591 (TN)	EXTERNAL SWITCH FHPL DOWN
6	5920F (R) / 5920B (R)	ISO BUS CAN SUPPLY POSITIVE
7	5900F (G) / 5900B (Y)	ISO BUS CAN SIGNAL LOW
8	5915F (B) / 5915B (B)	ISO BUS CAN SUPPLY GROUND
9	5910F (Y) / 5910B (G)	ISO BUS CAN SIGNAL HIGH
10	5970A (O)	ISO BUS ECU SIGNAL
11	5980 (U)	ISO BUS IMPLEMENT SIGNAL
12	2027 (R)	RADAR ASSEMBLY (GUN) POWER
13	3120 (K)	STEERING SENSOR SIGNAL
14	2044 (O)	PTO SOLENOID-FRONT RETURN(-)
19	2570 (R)	FRONT HITCH RAISE SOLENOID
20	60AA (B/W) / 60AC (B/W)	SENSOR GROUND
21	2510 (N)	FRONT HITCH POSITION SIGNAL
22	2530 (N) / 2530B (N)	FRONT HITCH V REF
23	2031 (Y)	RADAR PRESENT
24	2028B (G)	RADAR ASSEMBLY (GUN) SIGNAL
25	3230 (U)	AXLE HEIGHT SENSOR POSITION
26	3220 (LTG) / 3220A (LTG)	AXLE HEIGHT SENSOR 5V REF
31	2043 (O)	PTO SOLENOID-FRONT
32	- / 2260 (O)	PTO FRONT - SPEED SIGNAL
34	1010C (G) / 1010 (G)	IGNITION RELAY (COIL)
35	3274 (R)	LOADER VALVE #2 OUT
36	3275 (R)	LOADER VALVE #2 RETURN
38	1018 (LTG)	AIR CONDITIONER CLUTCH
39	2006B (U)	DE-ICING SWITCH - AIR CONDITIONER
40	2006A (U)	DE-ICING SWITCH - AIR CONDITIONER

https://tractormanualz.com/

POS.	WIRE NUMBER	CIRCUIT REFERENCE
42	5200AA (N)	EDC VALVE SUPPLY
44	2007 (Y)	AIR CONDITIONER LOW PRESSURE
46	2250L (K) / 2250 (K)	PTO FRONT - SUPPLY
47	3070D (L) / -	'B' PILLAR SKT SUPPLY
48	9032B (Y) / -	IGN+ TO POWER SKT
49	172B (W) / 172A (W)	BATTERY ISOLATOR RELAY COIL (OFF)
50	171B (W)	BATTERY ISOLATOR RELAY COIL

NOTE: *For the wiring color code refer to,* ***Wiring harness - Overview (A.30.A)****.*

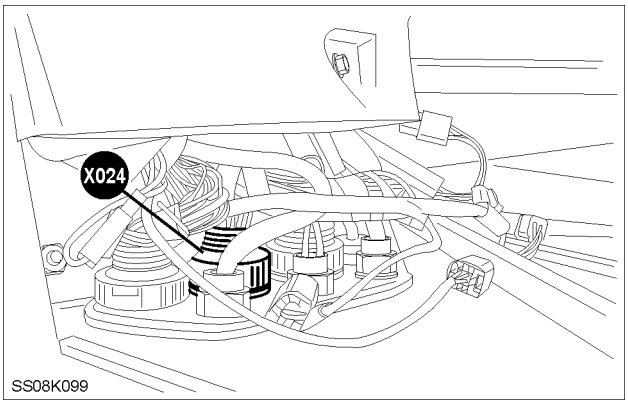

SS08K099 9

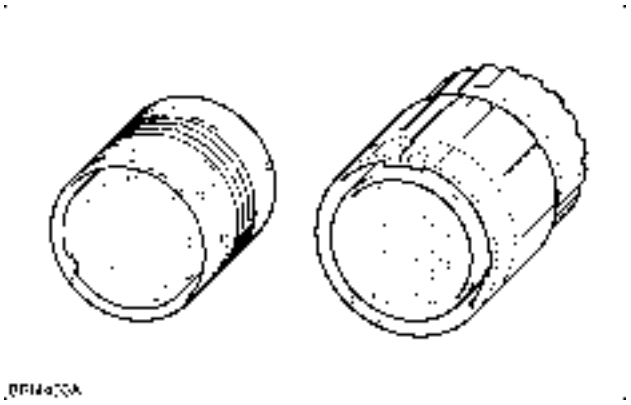

BRI4400B-03 10

FRONT RIGHT HAND CAB FLOOR

X025 MAIN POWER (FUSE) 3 POWER B

POS.	WIRE NUMBER	CIRCUIT REFERENCE
1	57 (B)	EARTH (ALL)

NOTE: *For the wiring color code refer to,* ***Wiring harness - Overview (A.30.A)****.*

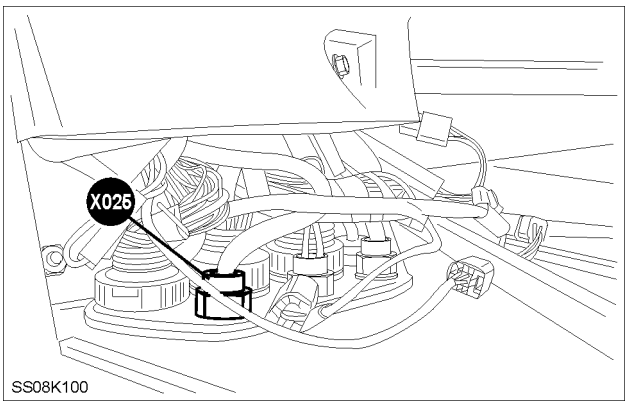

SS08K100 11

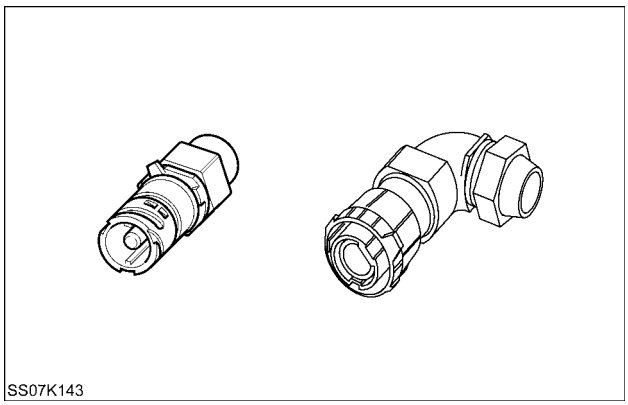

SS07K143 12

FRONT RIGHT HAND CAB FLOOR

https://tractormanualz.com/

X026 MAIN HARNESS CONNECTOR - E1 - ENIGNE TO CAB

POS.	WIRE NUMBER	CIRCUIT REFERENCE
1	5400BJ (Y) / 5400D (Y)	CAN H
2	5420BJ (G) / 5420D (G)	CAN L
10	2556 (N)	FRONT HITCH SWITCH COMMON RAIL
12	6315 (N)	REVERSIBLE FAN OPTION - RELAY CONTROL
13	6407 (O)	ENGINE SHUTDOWN SIGNAL (EDC16)
14	6408D (O) / 6408D (G)	FUSED B+ TO ECU (1)
15	6408N (G) / 6408A (G)	FUSED B+ TO ECU (1)
16	6408B (G)	FUSED B+ TO ECU (1)
17	6408C (G)	FUSED B+ TO ECU (1)
20	6418 (K)	ECU TO J1941(ISO) INTERFACE #2 CONNECTOR ISO K
24	3016 (S)	BRAKE FLUID LEVEL SIGNAL
25	10J (G) / 10H (G)	IGNITION SUPPLY
26	1030BB (U) / 1030B (U)	HEADLAMP DIP BEAM
27	1030A (U)	HEADLAMP DIP BEAM
28	6325 (N)	REVERSIBLE FAN OPTION - RELAY FEED
29	1073A (L)	WORKLAMP FRONT FEED
30	376 (L)	HORN FEED
36	1027BB (U) / 1027B (U)	HEADLAMP MAIN BEAM
37	1027A (U)	HEADLAMP MAIN BEAM
38	2095A (G) / 2095 (G)	INSTRUMENT SIGNAL GROUND
40	2014 (G)	ENGINE OIL PRESSURE SENDER (+5 VOLT)
41	1006A (N) / 1006 (N)	ALTERNATOR WARNING LAMP
43	71D (W) / 71C (W)	IGNITION SWITCHED FEEDS (UNFUSED)
44	1005 (S)	AIR CLEANER WARNING LAMP
45	1001S (W)	STARTER SOLENOID FEED
46	1001T (W)	STARTER SOLENOID FEED
47	2050AF (G) / -	PTO SUPPLY / DOG SUPPLY
48	6300 (N) / -	FAN SPEED
49	5020H (TN) / -	EDC PROC +5V REF VOLTAGE DROP POSN/RATE
51	6408F (G) / 6408N (G)	FUSED B+ TO ECU (1)

NOTE: *For the wiring color code refer to,* ***Wiring harness - Overview (A.30.A)****.*

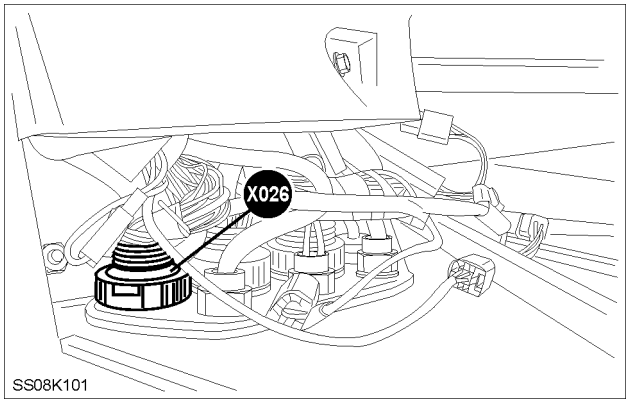

SS08K101 13

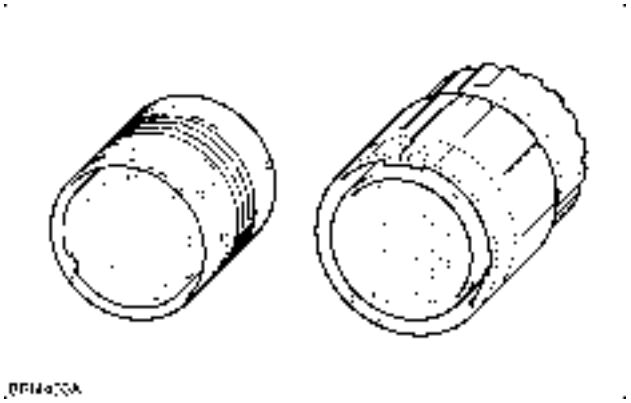

BRI4400B-03 14

FRONT RIGHT HAND CAB FLOOR

https://tractormanualz.com/

X028 DIAGNOSTIC CONNECTOR 2

POS.	WIRE NUMBER	CIRCUIT REFERENCE
A	57RG (B)	EARTH (ALL)
B	6408N (G)	FUSED B+ TO ECU (1)
C	5500E (R)	EHR CAN HIGH
D	5510E (U)	EHR CAN LOW
F	5960E (W)	RS232 OUTPUT TECU
G	5955C (G)	RS232 INPUT TECU

NOTE: *For the wiring color code refer to,* ***Wiring harness - Overview (A.30.A)****.*

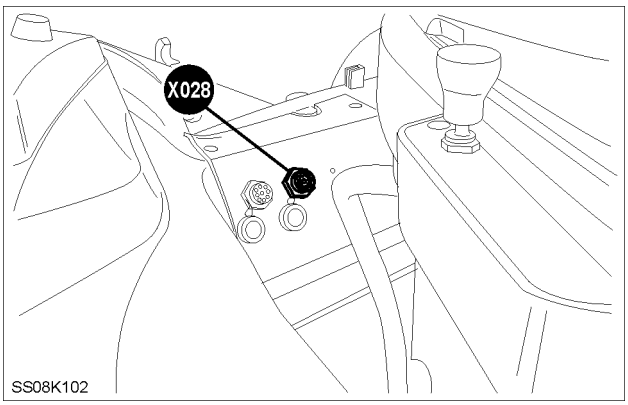

SS08K102 15

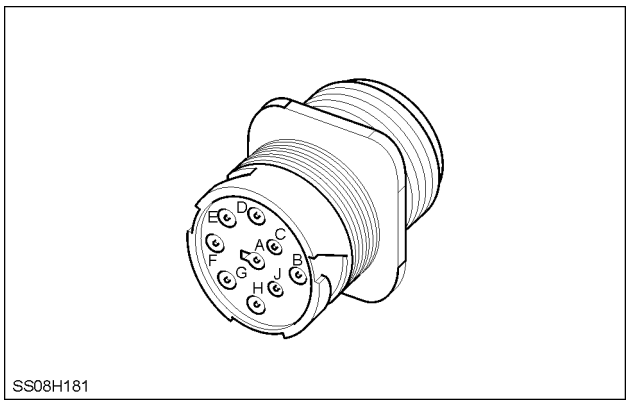

SS08H181 16

CAB RIGHT HAND BEHIND OPERATOR'S SEAT

https://tractormanualz.com/

Connector - Component diagram 03

X030 DIAGNOSTIC CONNECTOR

POS.	WIRE NUMBER	CIRCUIT REFERENCE
A	57AL (B)	EARTH (ALL)
B	6408E (G)	FUSED B+ TO ECU (1)
C	5400E (Y)	CAN H
D	5420E (G)	CAN L
E	6418 (K)	ECU TO J1941(ISO) INTERFACE #2 CONNECTOR ISO K
G	2200Z (G)	SERVICE MODE INITIATE
H	5900B (Y)	ISO BUS CAN SIGNAL LOW
J	5910B (G)	ISO BUS CAN SIGNAL HIGH

NOTE: *For the wiring color code refer to,* ***Wiring harness - Overview (A.30.A)****.*

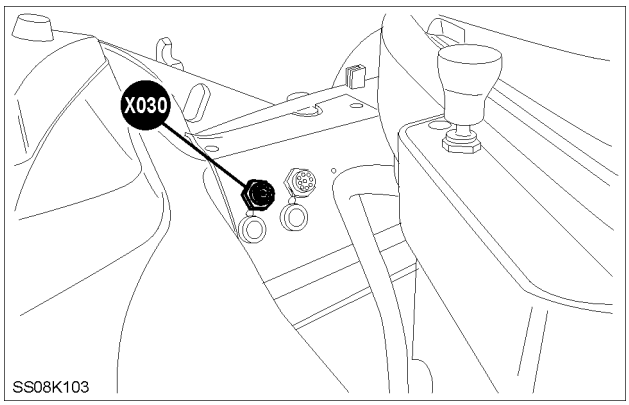

SS08K103 1

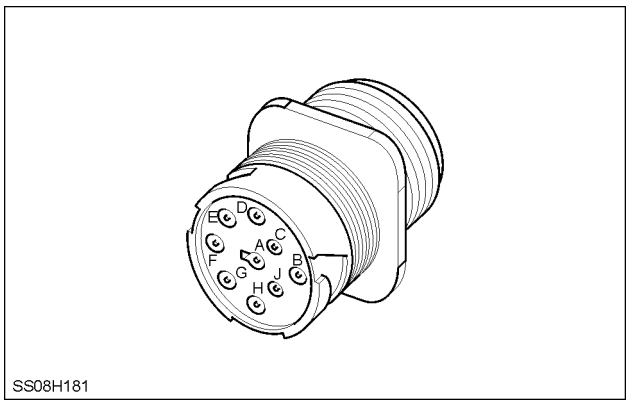

SS08H181 2

CAB RIGHT HAND BEHIND OPERATOR'S SEAT

X030A EARTH HEADER 2

POS.	WIRE NUMBER	CIRCUIT REFERENCE
X	57BU (B)	EARTH (ALL)

NOTE: *For the wiring color code refer to,* ***Wiring harness - Overview (A.30.A)****.*

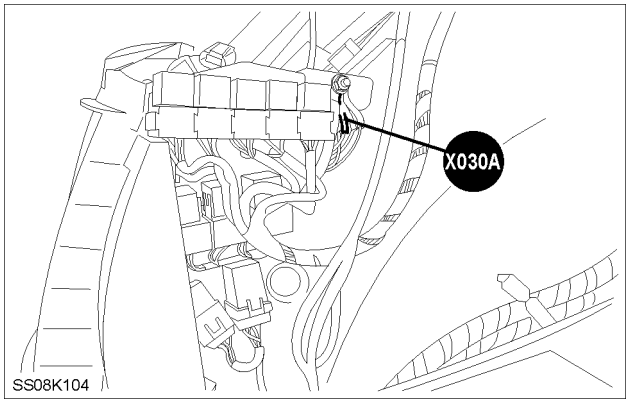

SS08K104 3

BRI4404B 4

BEHIND RIGHT HAND TRIM

https://tractormanualz.com/

X030B EARTH HEADER 2

POS.	WIRE NUMBER	CIRCUIT REFERENCE
X	57XX (B)	EARTH (ALL)

NOTE: *For the wiring color code refer to,* ***Wiring harness - Overview (A.30.A)****.*

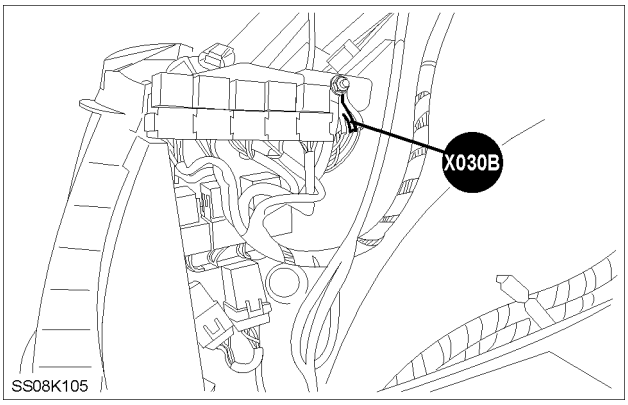

SS08K105 5

BRI4404B 6

BEHIND RIGHT HAND TRIM

X030C EARTH HEADER 2

POS.	WIRE NUMBER	CIRCUIT REFERENCE
X	57BB (B)	EARTH (ALL)

NOTE: *For the wiring color code refer to,* ***Wiring harness - Overview (A.30.A)****.*

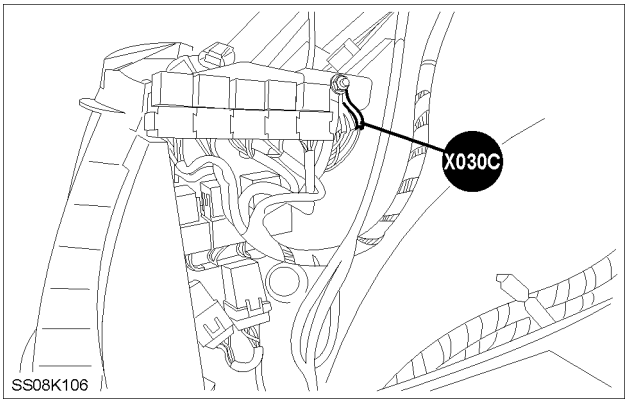

SS08K106 7

BRI4404B 8

BEHIND RIGHT HAND TRIM

https://tractormanualz.com/

X031 ADIC DIAGNOSTIC CONNECTOR

POS.	WIRE NUMBER	CIRCUIT REFERENCE
1	7650Z (W)	DIAGNOSTIC PLUG RS232 OUT
2	7640Z (TN)	DIAGNOSTIC PLUG RS232 IN
3	57BT (B)	EARTH (ALL)

NOTE: *For the wiring color code refer to,* ***Wiring harness - Overview (A.30.A)****.*

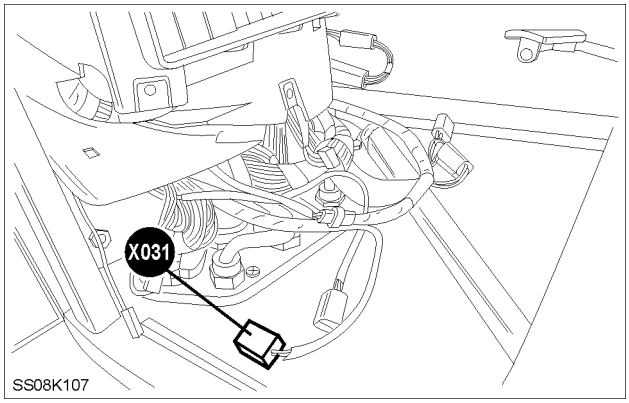

SS08K107 9

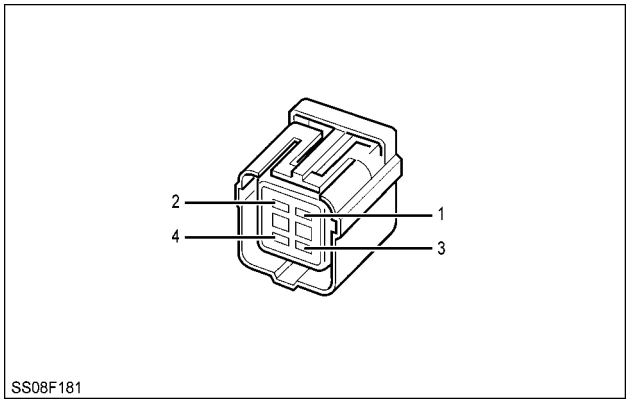

SS08F181 10

FRONT RIGHT HAND CAB FLOOR

X032 TIMER RELAY FOR BATTERY ISOLATOR AND HEATED MIRROR

POS.	WIRE NUMBER	CIRCUIT REFERENCE
1	57HM (B)	EARTH (ALL)
2	1928 (R)	HEATED MIRROR RELAY COIL +12V FROM SW
3	1925B (R)	MIRROR CONTROL +12V
4	1927 (R)	MIRROR ILLUMINATION
5	666C (L)	DOMELAMP SWITCH FEED
6	172A (W)	BATTERY ISOLATOR RELAY COIL (OFF)
7	172 (W)	BATTERY ISOLATOR RELAY COIL (OFF)
9	57SL (B)	EARTH (ALL)
10	1L (R)	BATTERY SUPPLY

NOTE: *For the wiring color code refer to,* ***Wiring harness - Overview (A.30.A)****.*

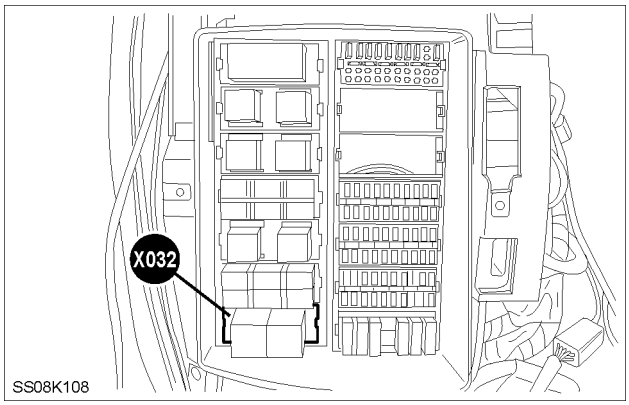

SS08K108 11

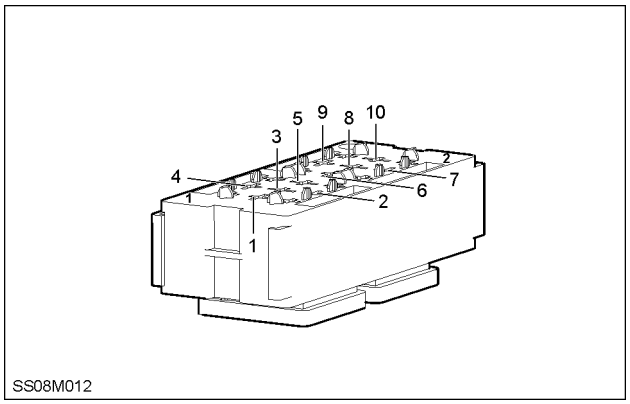

SS08M012 12

FRONT RIGHT HAND CAB

https://tractormanualz.com/

X032A EARTH HEADER 2

POS.	WIRE NUMBER	CIRCUIT REFERENCE
X	57 (B)	EARTH (ALL)

NOTE: *For the wiring color code refer to,* ***Wiring harness - Overview (A.30.A)****.*

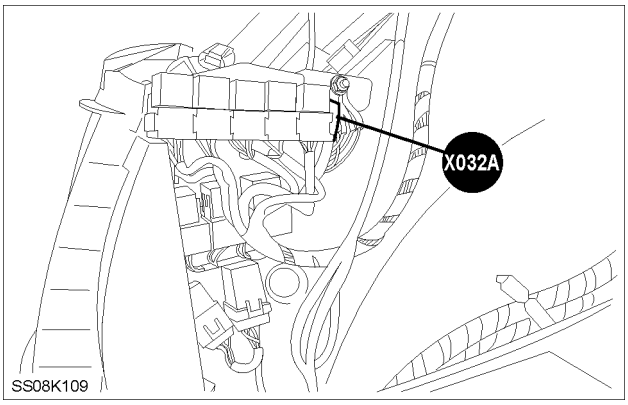

SS08K109 13

BRI4474B 14

BEHIND RIGHT HAND TRIM

X032B EARTH HEADER 2

POS.	WIRE NUMBER	CIRCUIT REFERENCE
X	57CR (B)	EARTH (ALL)

NOTE: *For the wiring color code refer to,* ***Wiring harness - Overview (A.30.A)****.*

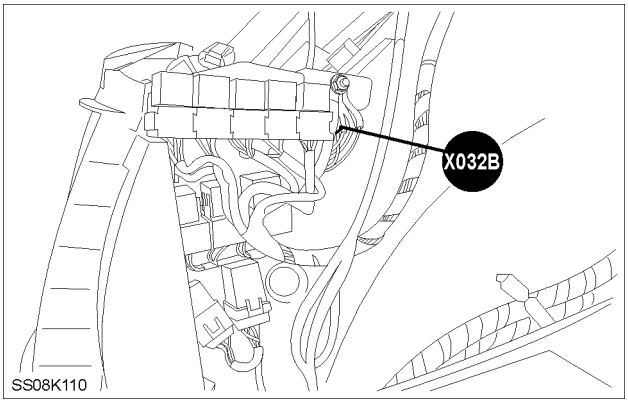

SS08K110 15

BRI4404B 16

BEHIND RIGHT HAND TRIM

https://tractormanualz.com/

X033 WINDSCREEN WIPERS FRONT & REAR (K001 / K002)

POS.	WIRE NUMBER	CIRCUIT REFERENCE
1	1120 (G)	RR WINDSHIELD WIPER PARK RETURN
2	1121B (G)	RR WINDSHIELD WASH
4	57K (B)	EARTH (ALL)
5	1119 (G)	RR WINDSHIELD WIPER
6	28 (Y)	WIPER MOTOR (PARK RETURN)
7	587 (LTG)	WINDSHIELD WIPER INTERMITTENT DELAY
8	1019B (G)	WINDSHIELD WIPER FEED
9	57J (B)	EARTH (ALL)
10	63 (U)	WIPER MOTOR-PARK FEED

NOTE: *For the wiring color code refer to,* ***Wiring harness - Overview (A.30.A)****.*

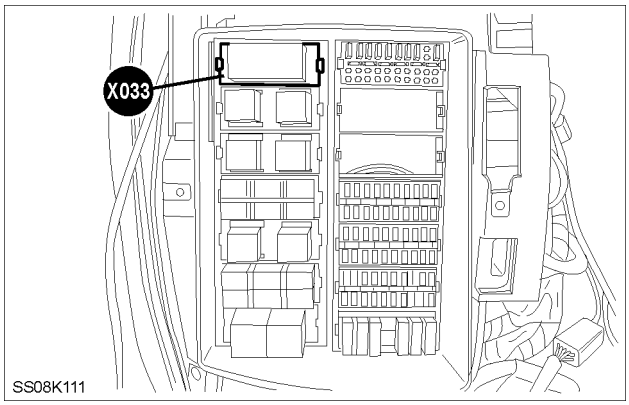

SS08K111 17

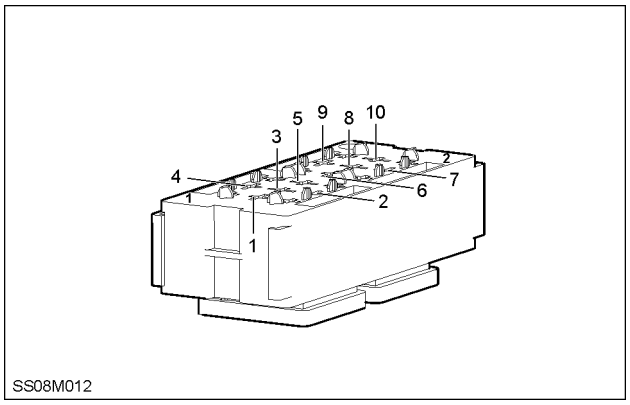

SS08M012 18

FRONT RIGHT HAND CAB

https://tractormanualz.com/

X034 IGNITION / LIGHTS RELAY (K003 / K004)

POS.	WIRE NUMBER	CIRCUIT REFERENCE
A30	150E (N)	BATTERY FEED (UNFUSED)(ALL)
A85	57AG (B)	EARTH (ALL)
A86	1010A (G)	IGNITION RELAY (COIL)
A87	1011 (Y)	SUPPLY TO FUSES
B30	1023 (N)	LIGHT SWITCH FEED
B85	57BC (B)	EARTH (ALL)
B86	1024 (R)	RIGHT & LEFT HAND SIDELAMP FEED
B87	1023A (N)	LIGHT SWITCH FEED

NOTE: *For the wiring color code refer to,* ***Wiring harness - Overview (A.30.A)****.*

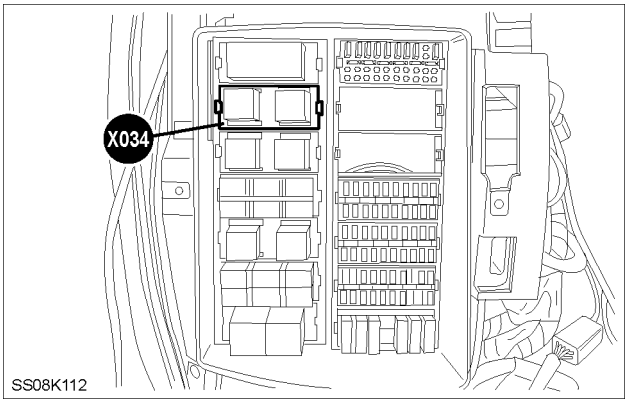

SS08K112 19

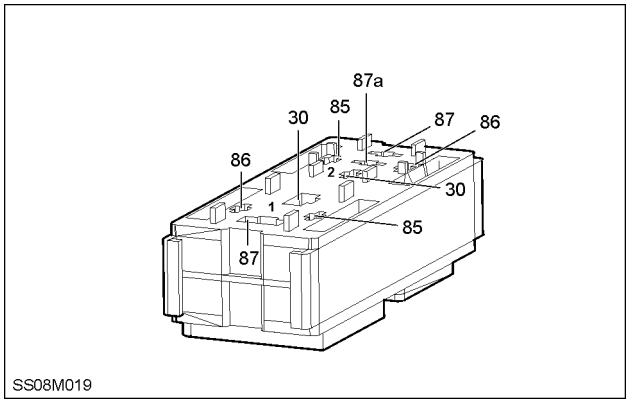

SS08M019 20

FRONT RIGHT HAND CAB

X035 STARTER MOTOR ON / BLOWER MOTOR RELAY (K005 / K006)

POS.	WIRE NUMBER	CIRCUIT REFERENCE
A30	150W (N)	BATTERY FEED (UNFUSED)(ALL)
A85	57AC (B)	EARTH (ALL)
A86	1001L (W)	STARTER SOLENOID FEED
A87	1001Y (W)	STARTER SOLENOID FEED
B30	982 (G)	BLOWER MOTOR FEED
B85	57CJ (B)	EARTH (ALL)
B86	181J (G)	BLOWER MOTOR FEED
B87	982A (G)	BLOWER MOTOR FEED

NOTE: *For the wiring color code refer to,* ***Wiring harness - Overview (A.30.A)****.*

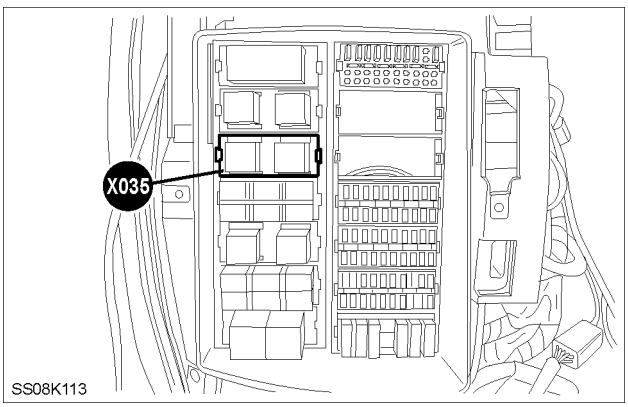

SS08K113 21

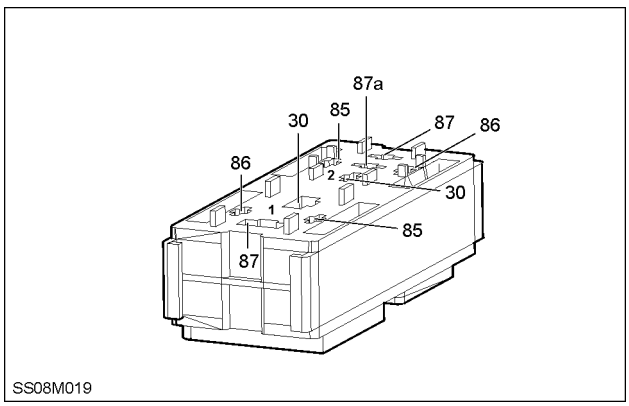

SS08M019 22

FRONT RIGHT HAND CAB

https://tractormanualz.com/

X036 CONTROL RELAYS (K007 / K012)

POS.	WIRE NUMBER	CIRCUIT REFERENCE
A1	825 (Y)	PNEUMATIC TRAILER SOLENOID +12V
A2	57CZ (B)	EARTH (ALL)
A3	10E (G)	IGNITION SUPPLY
A5	8000X (N)	TRAILER BRAKE SOLENOID
B1	57SZ (B)	EARTH (ALL)
B2	3150A (W)	HANDBRAKE SWITCH (N.C CONTACT) OFF SIG
B3	8060B (U)	TRAILER BRAKE SUPPLY
B4	8000B (N)	TRAILER BRAKE SOLENOID
B5	8070 (L)	TRAILER PARK BRAKE SOLENOID
C1	8010A (TN)	TRAILER BRAKE PRESSURE
C2	57BM (B)	EARTH (ALL)
C3	8060A (U)	TRAILER BRAKE SUPPLY
C5	8000C (N)	TRAILER BRAKE SOLENOID
D1	1027C (U)	HEADLAMP MAIN BEAM
D2	57BA (B)	EARTH (ALL)
D3	1027 (U)	HEADLAMP MAIN BEAM
D5	1027B (U)	HEADLAMP MAIN BEAM
E1	840B (G)	R & L STOPLAMP SIGNAL
E2	57BJ (B)	EARTH (ALL)
E3	810 (G)	STOPLAMPS
E5	810D (G)	STOPLAMPS
F1	1030AE (U)	HEADLAMP DIP BEAM
F2	57AZ (B)	EARTH (ALL)
F3	1030AA (U)	HEADLAMP DIP BEAM
F5	1030B (U)	HEADLAMP DIP BEAM

NOTE: *For the wiring color code refer to,* ***Wiring harness - Overview (A.30.A)****.*

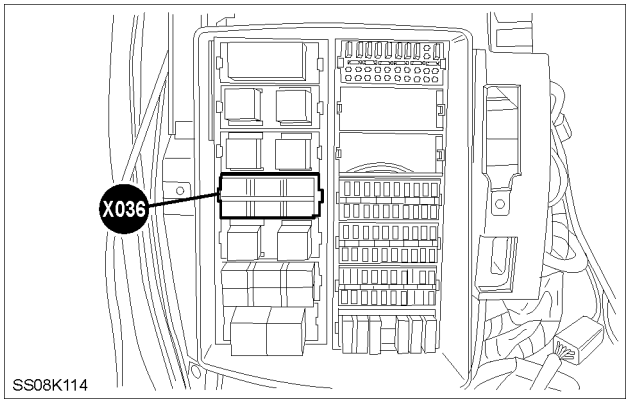

SS08K114 23

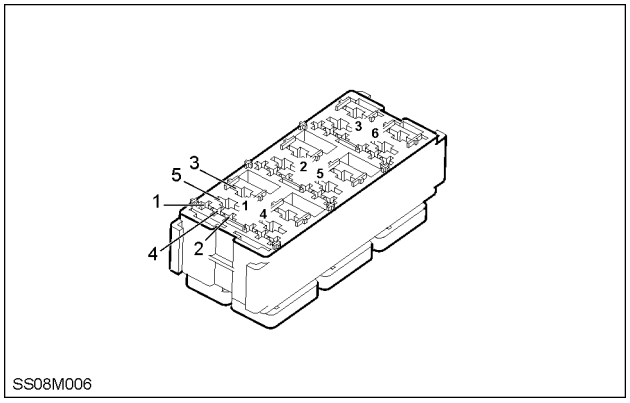

SS08M006 24

FRONT RIGHT HAND CAB

https://tractormanualz.com/

X037 ENGINE SHUTDOWN / GET U HOME RELAY (K013 / K014)

POS.	WIRE NUMBER	CIRCUIT REFERENCE
A30	6413B (O)	ENGINE SHUTDOWN RELAY SUPPLY
A85	6407 (O)	ENGINE SHUTDOWN SIGNAL (EDC16)
A86	150AP (N)	BATTERY FEED (UNFUSED)(ALL)
A87	150AN (N)	BATTERY FEED (UNFUSED)(ALL)
B30	1024 (R)	RIGHT & LEFT HAND SIDELAMP FEED
B85	1052 (Y)	GET U HOME LIGHTS RELAY
B86	1030AC (U)	HEADLAMP DIP BEAM
B87	1030AB (U)	HEADLAMP DIP BEAM

NOTE: *For the wiring color code refer to,* ***Wiring harness - Overview (A.30.A)****.*

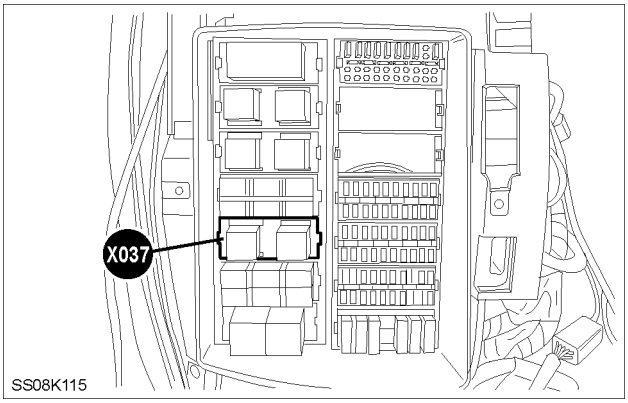

SS08K115 25

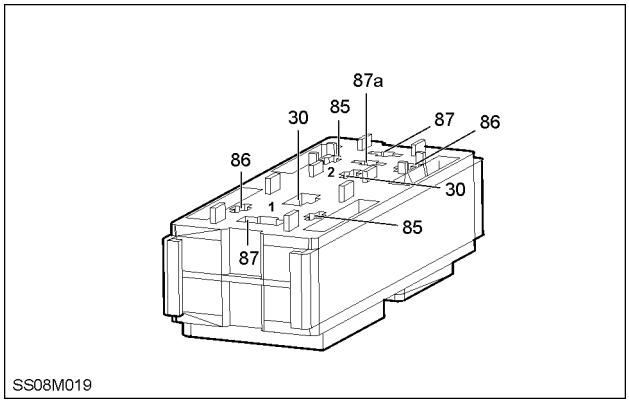

SS08M019 26

FRONT RIGHT HAND CAB

https://tractormanualz.com/

Connector - Component diagram 05

X053 FLASHER ECU

POS.	WIRE NUMBER	CIRCUIT REFERENCE
A1	3009A (G)	FLASHER UNIT SUPPLY B+
A2	249 (LTG)	SMV LAMPS RH
A3	349 (TN)	TRAILER TURN LAMPS RH
A4	250 (LTG)	SMV LAMPS LH
A5	350 (TN)	TRAILER TURN LAMPS LH
A6	1020 (G)	HAZARD SWITCH SUPPLY
A7	1034 (LTG)	TURN SIGNAL WARNING LAMP (TERM C3
A8	3000B (G)	FLASHER UNIT SUPPLY (TERMINAL 49)
B1	3009B (G)	FLASHER UNIT SUPPLY B+
B2	3002 (G)	RIGHT HAND FLASHER CIRCUIT
B3	3001 (G)	LEFT HAND FLASHER CIRCUIT
B4	1020A (G)	HAZARD SWITCH SUPPLY
B5	1033 (LTG)	TURN SIGNAL WARNING LAMP (TERM C2)
B6	50 (G)	LEFT HAND TURN SIGNAL
B7	49 (G)	RIGHT HAND TURN SIGNAL
B8	57BG (B)	EARTH (ALL)
C1	49A (G)	RIGHT HAND TURN SIGNAL
C2	50A (G)	LEFT HAND TURN SIGNAL
C3	1039 (LTG)	NASO LIGHTS INPUT

NOTE: *For the wiring color code refer to,* ***Wiring harness - Overview (A.30.A)****.*

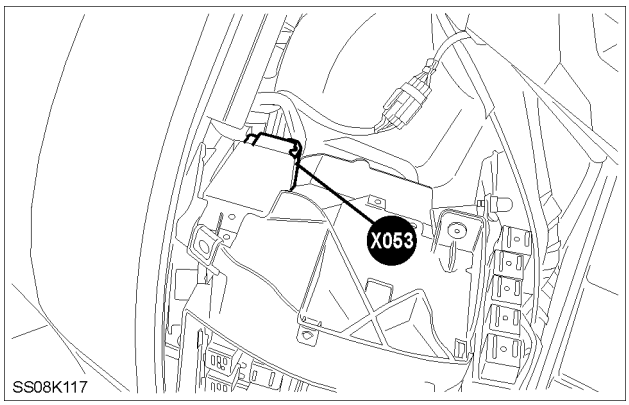

SS08K117 1

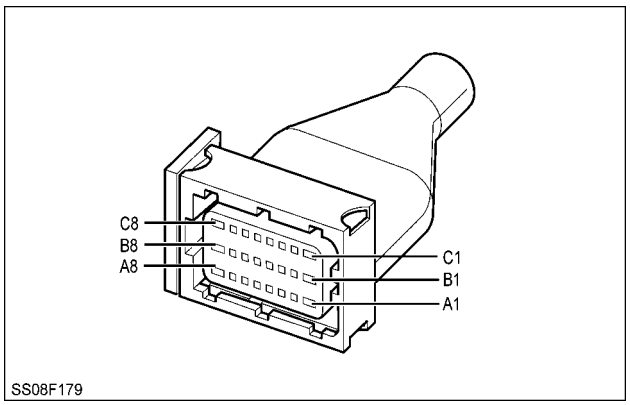

SS08F179 2

BEHIND RIGHT HAND TRIM TOP THE FUSEBOX

https://tractormanualz.com/

X059A LEVER MOUNTED PTO BRAKE SWITCH

POS.	WIRE NUMBER	CIRCUIT REFERENCE
2	2120 (TN)	PTO BRAKE SIGNAL
4	2120A (TN)	PTO BRAKE SIGNAL

NOTE: *For the wiring color code refer to,* ***Wiring harness - Overview (A.30.A)****.*

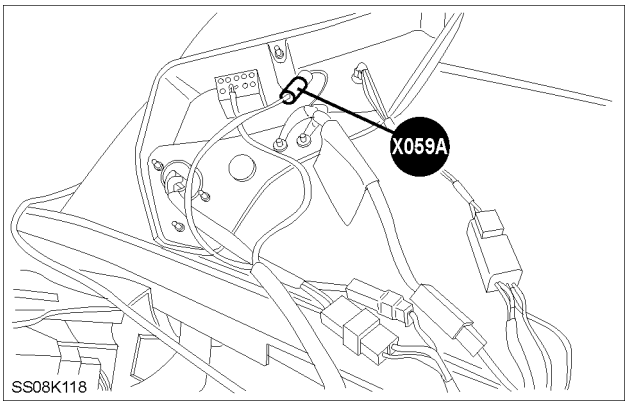

SS08K118 3

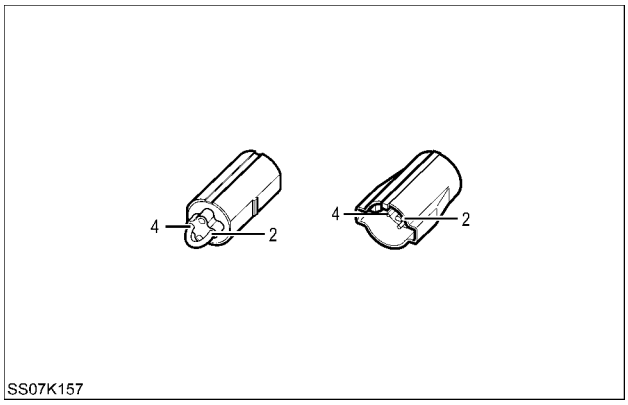

SS07K157 4

BEHIND RIGHT HAND SWITCH PANEL

X059B LEVER MOUNTED PTO MATING HALF

POS.	WIRE NUMBER	CIRCUIT REFERENCE
2	2120B (TN)	PTO BRAKE SIGNAL
4	2120B (TN)	PTO BRAKE SIGNAL

NOTE: *For the wiring color code refer to,* ***Wiring harness - Overview (A.30.A)****.*

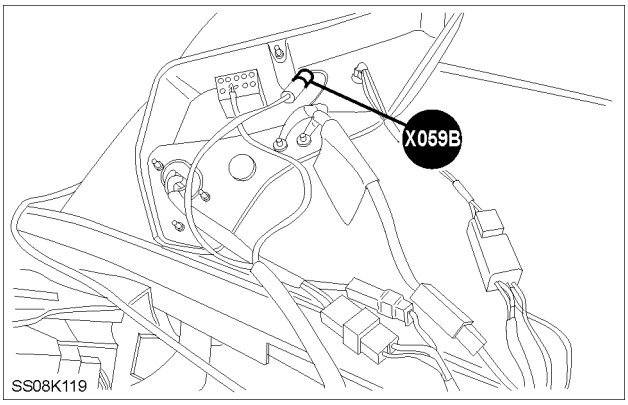

SS08K119 5

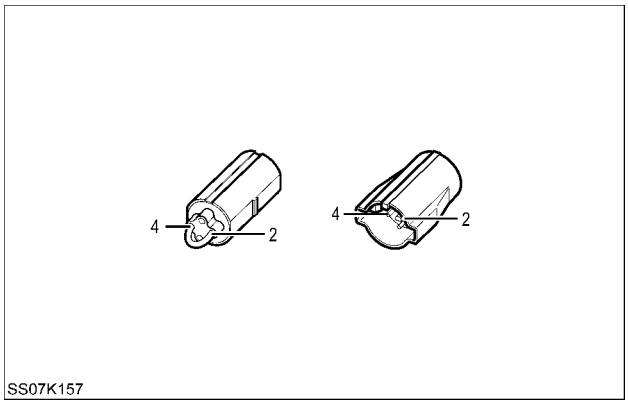

SS07K157 6

BEHIND RIGHT HAND SWITCH PANEL

https://tractormanualz.com/

Connector - Component diagram 06

X060 FUSE BOX MAIN B+ FEED

POS.	WIRE NUMBER	CIRCUIT REFERENCE
1	1 (R)	BATTERY SUPPLY

NOTE: *For the wiring color code refer to,* ***Wiring harness - Overview (A.30.A)****.*

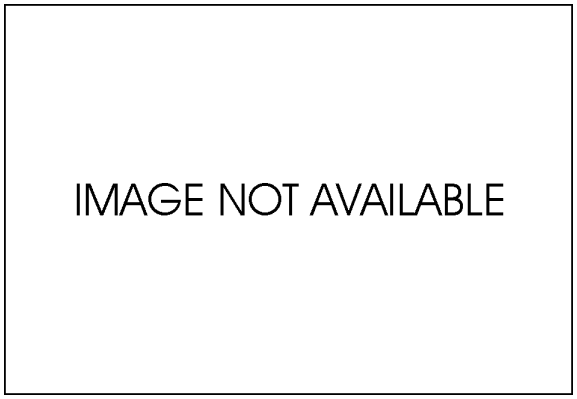

INA 1

BRI4474B 2

BEHIND RIGHT HAND FUSEBOX

X067 REAR PTO BRAKE SWITCH

POS.	WIRE NUMBER	CIRCUIT REFERENCE
1	2120A (TN)	PTO BRAKE SIGNAL
2	2050J (G)	PTO SUPPLY / DOG SUPPLY

NOTE: *For the wiring color code refer to,* ***Wiring harness - Overview (A.30.A)****.*

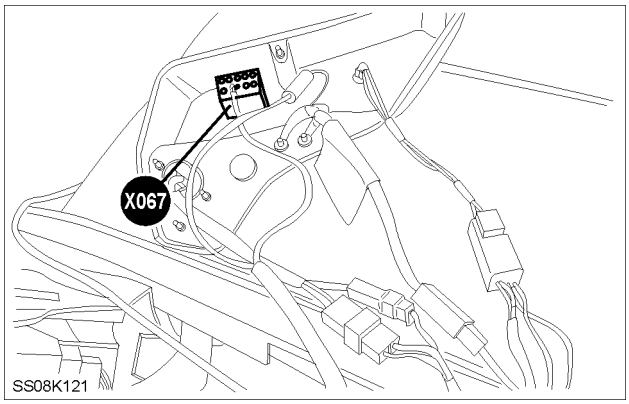

SS08K121 3

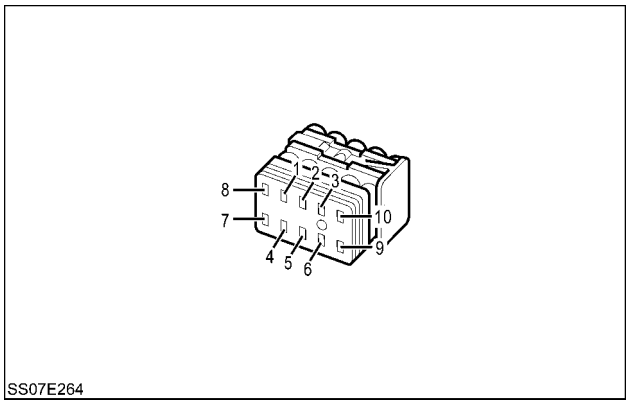

SS07E264 4

BEHIND RIGHT HAND SWITCH PANEL

https://tractormanualz.com/

Connector - Component diagram 07

X070 MAXI - FUSE MODULE

POS.	WIRE NUMBER	CIRCUIT REFERENCE
M1	150E (N)	BATTERY FEED (UNFUSED)(ALL)
M2	150V (N)	BATTERY FEED (UNFUSED)(ALL)
M3	150AF (N)	BATTERY FEED (UNFUSED)(ALL)
M4	150Y (N)	BATTERY FEED (UNFUSED)(ALL)
M5	150G (N)	BATTERY FEED (UNFUSED)(ALL)
M6	150F (N)	BATTERY FEED (UNFUSED)(ALL)

NOTE: *For the wiring color code refer to,* ***Wiring harness - Overview (A.30.A)****.*

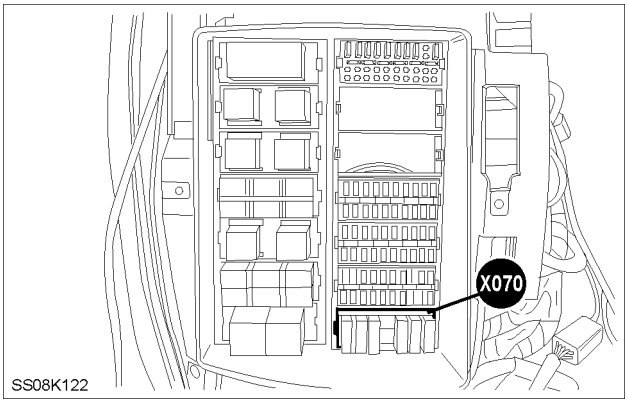

SS08K122 1

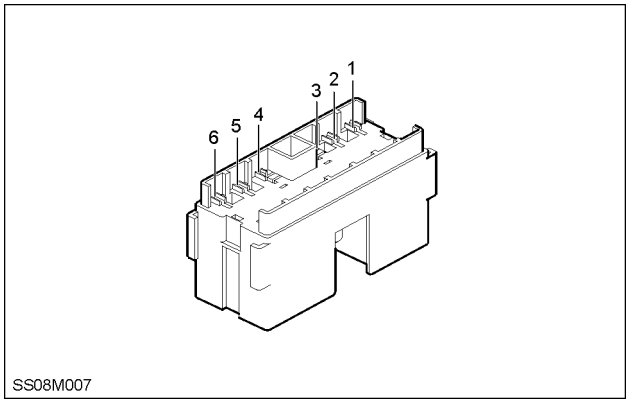

SS08M007 2

FRONT RIGHT HAND CAB

https://tractormanualz.com/

X071 MINI FUSE MODULE F041 TO F060

POS.	WIRE NUMBER	CIRCUIT REFERENCE
3A	71 (W)	IGNITION SWITCHED FEEDS (UNFUSED)
3B	71D (W)	IGNITION SWITCHED FEEDS (UNFUSED)
4A	3070D (L)	'B' PILLAR SKT SUPPLY
4B	150AJ (N)	BATTERY FEED (UNFUSED)(ALL)
5A	9032C (Y)	IGN+ TO POWER SKT.
5B	1011E (Y)	SUPPLY TO FUSES
6A	6408K (G)	FUSED B+ TO ECU (1)
7A	6413B (O)	ENGINE SHUTDOWN RELAY SUPPLY
9A	6408D (O)	FUSED B+ TO ECU (1)
10A	6325 (N)	REVERSIBLE FAN OPTION - RELAY FEED
10B	1011K (Y)	SUPPLY TO FUSES
11A	3031 (N)	EPB +12 HOT
11B	150BC (N)	BATTERY FEED (UNFUSED)(ALL)
12A	160R (Y)	BATTERY SUPPLY ELECTRONICS
13A	7000 (U)	TRANS CONTROL SUPPLY
14A	2050 (G)	PTO SUPPLY / DOG SUPPLY
14B	160C (U)	BATTERY SUPPLY ELECTRONICS
15A	5200 (N)	EDC VALVE SUPPLY
16A	2250 (K)	PTO FRONT - SUPPLY
17A	2540 (N)	FRONT HITCH +12v IGN
20A	1H (R)	BATTERY SUPPLY
20B	1E (R)	BATTERY SUPPLY

NOTE: *For the wiring color code refer to,* ***Wiring harness - Overview (A.30.A)****.*

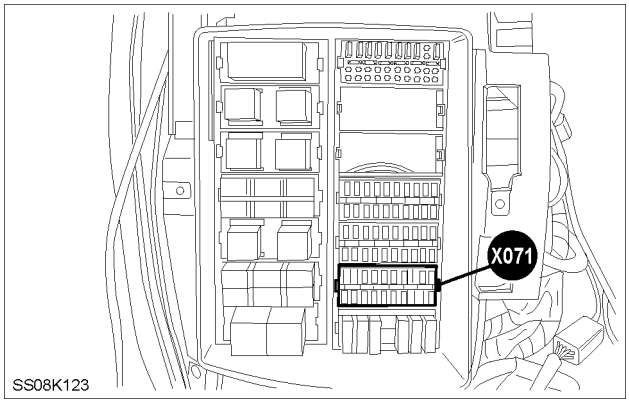

SS08K123 3

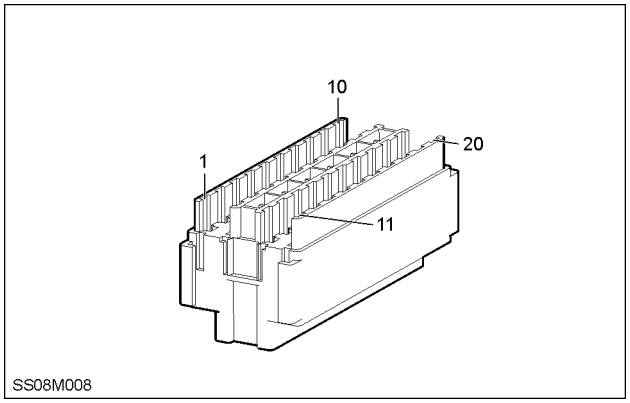

SS08M008 4

FRONT RIGHT HAND CAB

https://tractormanualz.com/

X072 MINI FUSE MODULE F021 TO F040

POS.	WIRE NUMBER	CIRCUIT REFERENCE
1A	10J (G)	IGNITION SUPPLY
1B	1011D (Y)	SUPPLY TO FUSES
2A	1013 (R)	RIGHT HAND LAMPS
3A	1014 (R)	LEFT HAND LAMPS
3B	1023A (N)	LIGHT SWITCH FEED
4A	1012 (R)	ILLUMINATION
5A	1030 (U)	HEADLAMP DIP BEAM
5B	1023 (N)	LIGHT SWITCH FEED
6A	1027 (U)	HEADLAMP MAIN BEAM
6B	150T (N)	BATTERY FEED (UNFUSED)(ALL)
7A	1073 (L)	WORKLAMP FRONT FEED
7B	150P (N)	BATTERY FEED (UNFUSED)(ALL)
8A	998D (G)	WORK LAMP-REAR FEED (INNER)
9A	1071 (L)	WORKLAMP FRONT FEED
10A	998C (G)	WORK LAMP-REAR FEED (INNER)
10B	150AB (N)	BATTERY FEED (UNFUSED)(ALL)
11A	4011 (L)	ROTATING BEACON SWITCH SUPPLY
11B	150BA (N)	BATTERY FEED (UNFUSED)(ALL)
12A	3009 (G)	FLASHER UNIT SUPPLY B+
13A	6408 (G)	FUSED B+ TO ECU (1)
14A	9031 (L)	ADIC MEMORY B+
14B	150AG (N)	BATTERY FEED (UNFUSED)(ALL)
15A	5000 (L)	EDC MEMORY POWER
16A	1072A (L)	WORKLAMP FRONT RELAY SUPPLY
17A	1072B (L)	WORKLAMP FRONT RELAY SUPPLY
17B	150JA (N)	BATTERY FEED (UNFUSED)(ALL)
18A	1099 (R)	FEED FRONT WORKLAMP INNER
20A	3079 (R)	RADIO +12V IGNITION
20B	137 (W)	RADIO FEED

NOTE: *For the wiring color code refer to,* ***Wiring harness - Overview (A.30.A)****.*

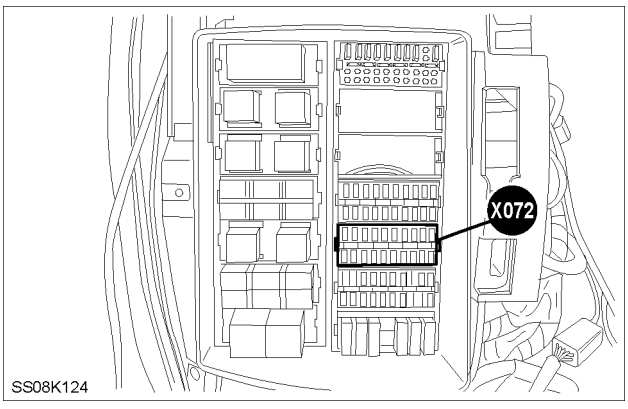

SS08K124 5

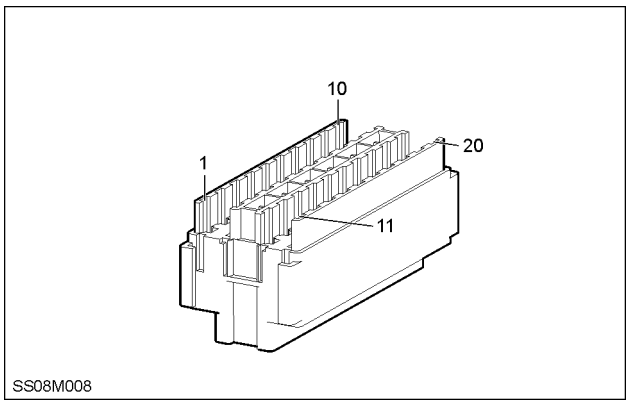

SS08M008 6

FRONT RIGHT HAND CAB

https://tractormanualz.com/

X073 MINI FUSE MODULE F001 TO F020

POS.	WIRE NUMBER	CIRCUIT REFERENCE
1A	666 (L)	DOMELAMP SWITCH FEED
1B	150AC (N)	BATTERY FEED (UNFUSED)(ALL)
2A	3070 (L)	'B' PILLAR SKT SUPPLY
3A	981 (G)	A/C CLUTCH RELAY FEED
4A	3070A (L)	'B' PILLAR SKT SUPPLY
5A	982 (G)	BLOWER MOTOR FEED
5B	150AD (N)	BATTERY FEED (UNFUSED)(ALL)
6A	138A (L)	RADIO KAM
7A	150B (N)	BATTERY FEED (UNFUSED)(ALL)
7B	150J (N)	BATTERY FEED (UNFUSED)(ALL)
8A	150A (N)	BATTERY FEED (UNFUSED)(ALL)
9A	3271A (O)	LOADER RELAY FEED
9B	1011A (Y)	SUPPLY TO FUSES
10A	3070E (L)	'B' PILLAR SKT SUPPLY
11A	1019 (G)	WINDSHIELD WIPER FEED
12A	1038 (TN)	WINDSHIELD WIPER FEED-REAR
13A	810 (G)	STOPLAMPS
13B	1011B (Y)	SUPPLY TO FUSES
14A	3000A (G)	FLASHER UNIT SUPPLY (TERMINAL 49)
15A	10 (G)	IGNITION SUPPLY
16A	8060 (U)	TRAILER BRAKE SUPPLY
17A	9032 (Y)	IGN+ TO POWER SKT.
18A	181A (G)	BLOWER MOTOR FEED
18B	1011C (Y)	SUPPLY TO FUSES
19A	1925 (R)	MIRROR CONTROL +12V
20A	1050 (G)	BLOWER MOTOR FEED

NOTE: *For the wiring color code refer to,* ***Wiring harness - Overview (A.30.A)****.*

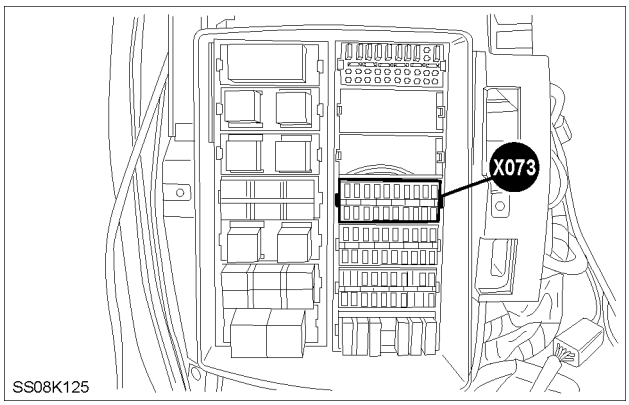

SS08K125 7

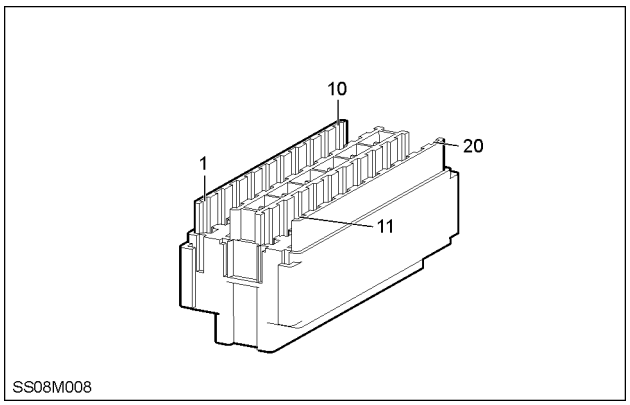

SS08M008 8

FRONT RIGHT HAND CAB

https://tractormanualz.com/

X074 RELAY MODULE (K015 - K020)

POS.	WIRE NUMBER	CIRCUIT REFERENCE
A1	5597A (S)	EHR MASTER ENABLE
A2	57GH (B)	EARTH (ALL)
A3	2250F (K)	PTO FRONT - SUPPLY
A5	5515 (S)	EHR +12V IGN.
B1	2005 (O)	AIR CON CLUTCH RELAY
B2	57CK (B)	EARTH (ALL)
B3	981 (G)	A/C CLUTCH RELAY FEED
B5	1018 (LTG)	AIR CONDITIONER CLUTCH
C1	173A (W)	BATTERY ISOLATOR RELAY COIL +12V
C2	57CC (B)	EARTH (ALL)
C3	172A (W)	BATTERY ISOLATOR RELAY COIL (OFF)
C4	172B (W)	BATTERY ISOLATOR RELAY COIL (OFF)
D1	1010B (G)	IGNITION RELAY (COIL)
D2	57AF (B)	EARTH (ALL)
D3	160 (U)	BATTERY SUPPLY ELECTRONICS
D5	160C (U)	BATTERY SUPPLY ELECTRONICS
E1	1090 (R)	REAR WORKLAMP RELAY SIGNAL
E2	57AS (B)	EARTH (ALL)
E3	998C (G)	WORK LAMP-REAR FEED (INNER)
E5	998 (G)	WORK LAMP-REAR FEED (INNER)
F1	1092 (R)	FRONT WORKLAMP RELAY SIGNAL
F2	57AR (B)	EARTH (ALL)
F3	1073 (L)	WORKLAMP FRONT FEED
F5	1073A (L)	WORKLAMP FRONT FEED

NOTE: *For the wiring color code refer to,* ***Wiring harness - Overview (A.30.A)****.*

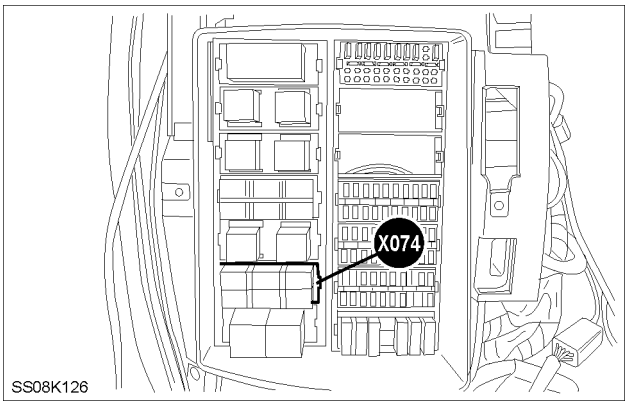

SS08K126 9

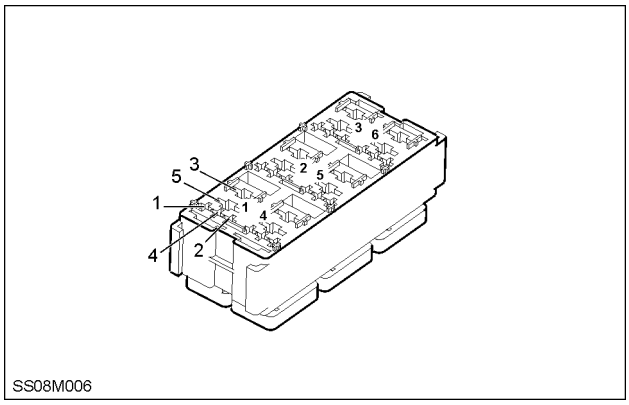

SS08M006 10

FRONT RIGHT HAND CAB

https://tractormanualz.com/

X076 DIODE BLOCK

POS.	WIRE NUMBER	CIRCUIT REFERENCE
1A	1013AG (R)	RIGHT HAND LAMPS
1B	1024A (R)	RIGHT & LEFT HAND SIDELAMP FEED
2A	1013AF (R)	RIGHT HAND LAMPS
2B	1013AE (R)	RIGHT HAND LAMPS
3A	1030AE (U)	HEADLAMP DIP BEAM
3B	1024B (R)	RIGHT & LEFT HAND SIDELAMP FEED
4A	1030AF (U)	HEADLAMP DIP BEAM
4B	1030C (U)	HEADLAMP DIP BEAM
5A	825B (Y)	PNEUMATIC TRAILER SOLENOID +12V
5B	830A (R)	STOPLAMP SWITCH RH
6A	820A (R)	STOPLAMP SWITCH LH
6B	825A (Y)	PNEUMATIC TRAILER SOLENOID +12V
7A	171A (W)	BATTERY ISOLATOR RELAY COIL
7B	1001AD (W)	STARTER SOLENOID FEED
10A	1030AJ (U)	HEADLAMP DIP BEAM
10B	1027AA (U)	HEADLAMP MAIN BEAM
19A	150AH (N)	BATTERY FEED (UNFUSED)(ALL)
19B	150AM (N)	BATTERY FEED (UNFUSED)(ALL)
20A	150AI (N)	BATTERY FEED (UNFUSED)(ALL)
20B	1D (R)	BATTERY SUPPLY

NOTE: *For the wiring color code refer to,* ***Wiring harness - Overview (A.30.A)****.*

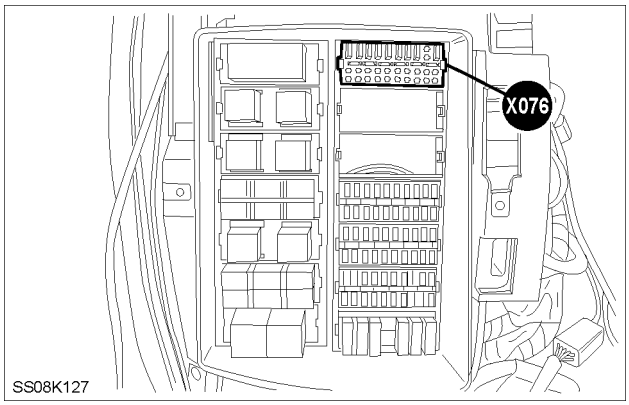

SS08K127 11

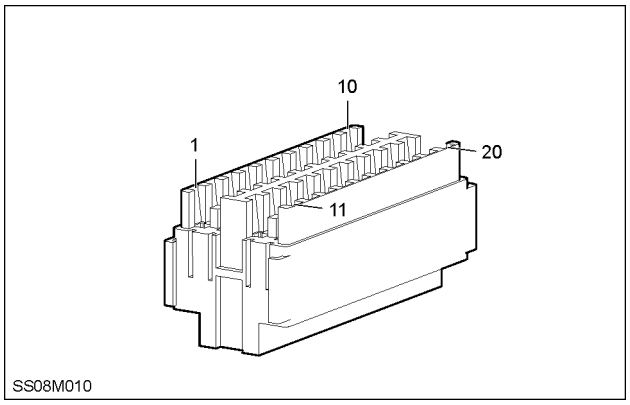

SS08M010 12

FRONT RIGHT HAND CAB

https://tractormanualz.com/

Connector - Component diagram 08

X080 ARMREST 1

POS.	WIRE NUMBER	CIRCUIT REFERENCE
A1	5200AT (N)	EDC VALVE SUPPLY
A2	5400D (Y)	CAN H
A3	5420D (G)	CAN L
A4	5500W (R) / 5500B (R)	EHR CAN HIGH
A5	5510W (U) / 5510B (U)	EHR CAN LOW
A6	5955C (G) / 5955C (S)	RS232 INPUT TECU
A7	5960E (W) / 5960C (W)	RS232 OUTPUT TECU
A8	2250S (K)	PTO FRONT - SUPPLY
B1	7000BM (U)	TRANS CONTROL SUPPLY
B2	2045 (O)	PTO SWITCH TO MODULE
B3	2046 (O)	PTO SWITCH (VCC)
B4	2248 (K)	PTO FRONT - SWITCH (VCCS)
B5	2245 (K)	PTO FRONT - SWITCH TO MODULE
B6	2065 (N)	PTO ENGAGED
B7	2270 (O)	PTO FRONT - WARNING LAMP
B8	57RE (B)	EARTH (ALL)
C2	5915 (B)	EDC VALVE SUPPLY
C3	5900 (G)	ISO BUS CAN SIGNAL LOW
C4	5910 (Y)	ISO BUS CAN SIGNAL HIGH
C5	5920 (R)	ISO BUS CAN SUPPLY POSITIVE
C8	57RF (B)	EARTH (ALL)

NOTE: *For the wiring color code refer to,* ***Wiring harness - Overview (A.30.A)****.*

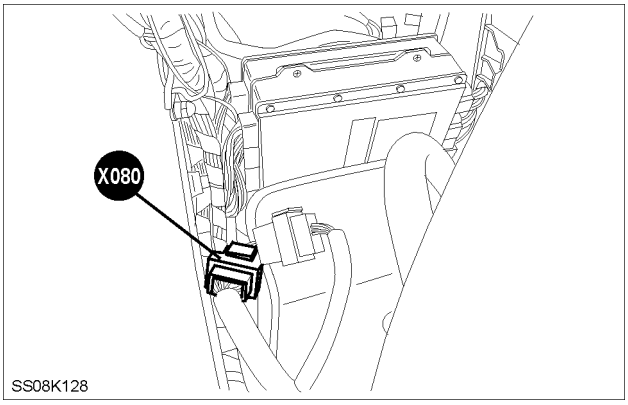

SS08K128 1

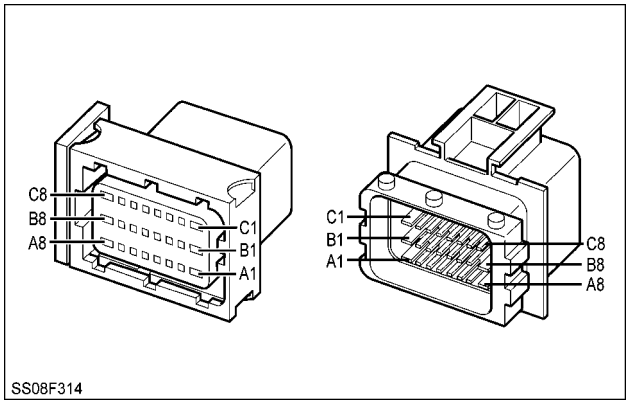

SS08F314 2

BEHIND RIGHT HAND TRIM

https://tractormanualz.com/

X081 SEAT CONNECTOR

POS.	WIRE NUMBER	CIRCUIT REFERENCE
1	6355A (R)	+5V LOW POWER REFERENCE
2	2069 (O)	PTO MANAGEMENT ON
3	181K (G)	BLOWER MOTOR FEED
4	57CN (B)	EARTH (ALL)

NOTE: *For the wiring color code refer to,* ***Wiring harness - Overview (A.30.A)****.*

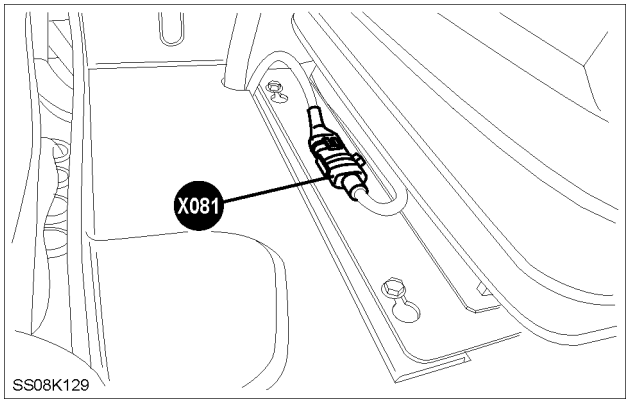

SS08K129 3

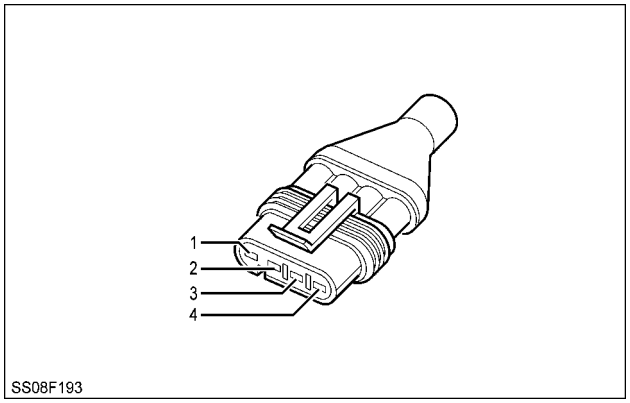

SS08F193 4

IN CAB RIGHT OF OPERATOR'S SEAT

X082 LOADER POWER

POS.	WIRE NUMBER	CIRCUIT REFERENCE
1	3271A (O)	LOADER RELAY FEED
2	57FP (B)	EARTH (ALL)

NOTE: *For the wiring color code refer to,* ***Wiring harness - Overview (A.30.A)****.*

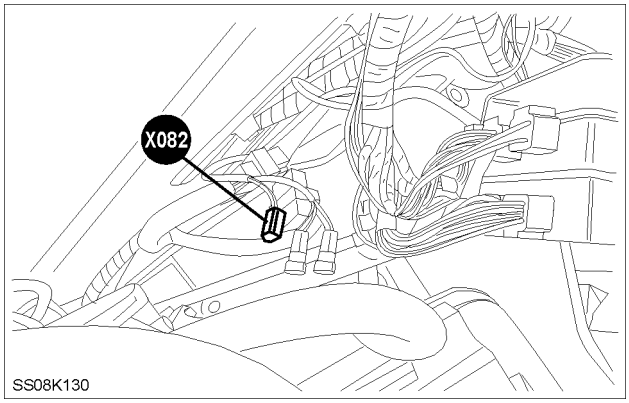

SS08K130 5

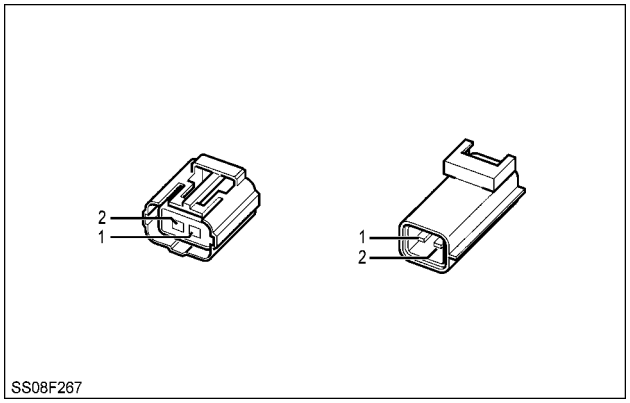

SS08F267 6

BEHIND RIGHT HAND TRIM

https://tractormanualz.com/

X084 LOADER VALVE 2

POS.	WIRE NUMBER	CIRCUIT REFERENCE
1	3274 (R)	LOADER VALVE #2 OUT
2	3275 (R)	LOADER VALVE #2 RETURN

NOTE: *For the wiring color code refer to,* ***Wiring harness - Overview (A.30.A)****.*

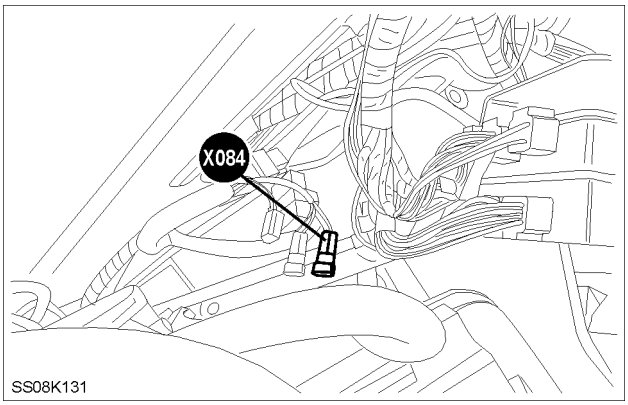

SS08K131 7

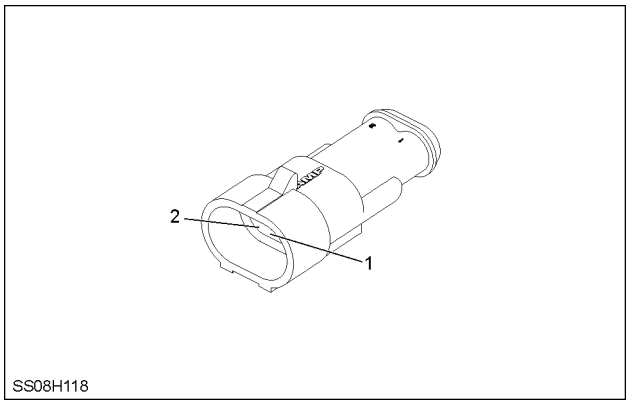

SS08H118 8

BEHIND RIGHT HAND TRIM

X085 LOADER VALVE 1

POS.	WIRE NUMBER	CIRCUIT REFERENCE
1	3272 (O)	LOADER VALVE #1 OUT
2	3273 (O)	LOADER VALVE #1 RETURN

NOTE: *For the wiring color code refer to,* ***Wiring harness - Overview (A.30.A)****.*

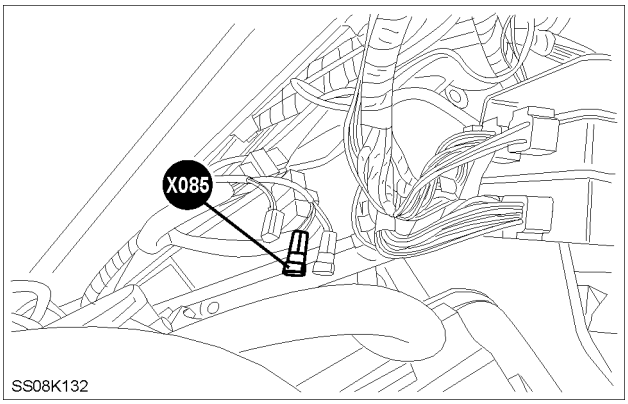

SS08K132 9

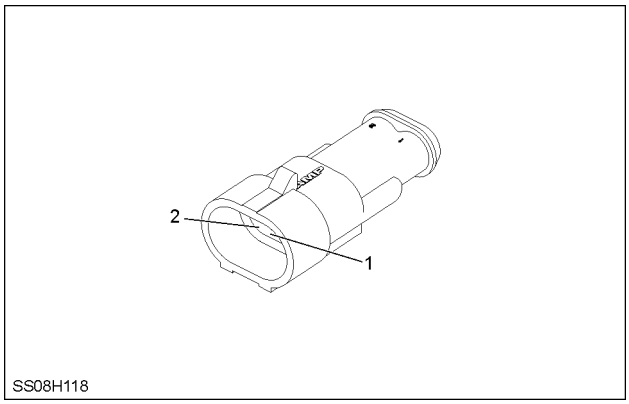

SS08H118 10

BEHIND RIGHT HAND TRIM

https://tractormanualz.com/

X086A EARTH HEADER 1

POS.	WIRE NUMBER	CIRCUIT REFERENCE
1	57CG (B)	EARTH (ALL)

NOTE: *For the wiring color code refer to,* ***Wiring harness - Overview (A.30.A)****.*

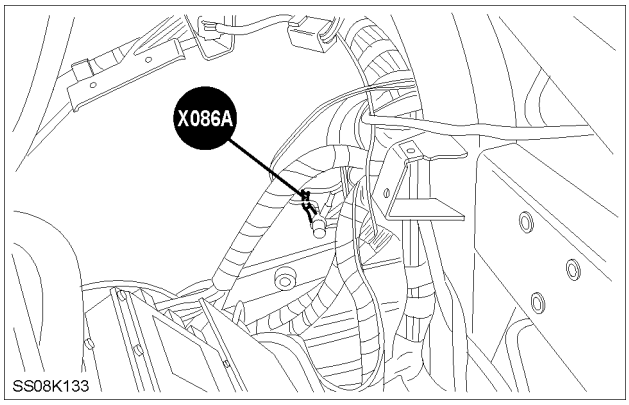

SS08K133 11

BRI4404B 12

BEHIND RIGHT HAND TRIM

X086B EARTH HEADER 1

POS.	WIRE NUMBER	CIRCUIT REFERENCE
1	57CH (B)	EARTH (ALL)

NOTE: *For the wiring color code refer to,* ***Wiring harness - Overview (A.30.A)****.*

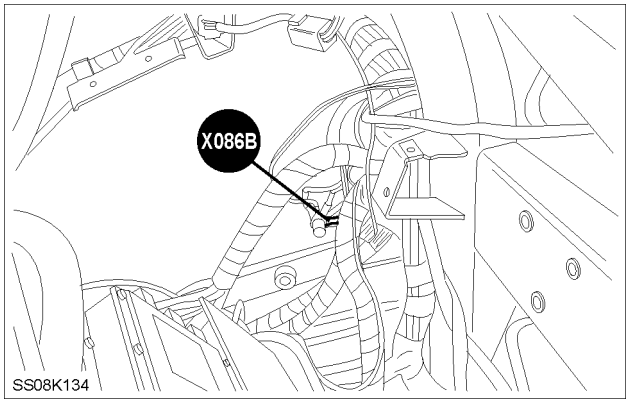

SS08K134 13

BRI4404B 14

BEHIND RIGHT HAND TRIM

https://tractormanualz.com/

X086C EARTH HEADER 1

POS.	WIRE NUMBER	CIRCUIT REFERENCE
1	57BH (B)	EARTH (ALL)

NOTE: *For the wiring color code refer to,* ***Wiring harness - Overview (A.30.A)****.*

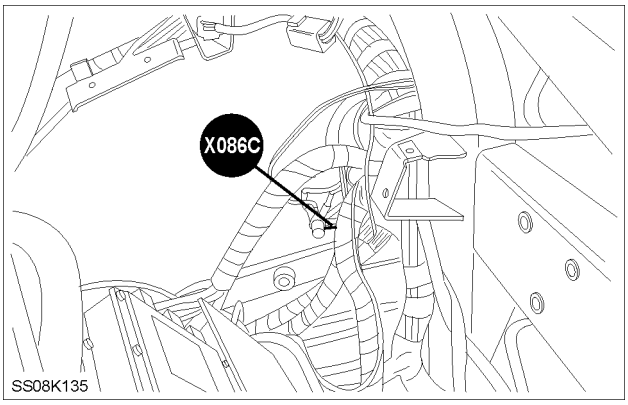

SS08K135 15

BRI4404B 16

BEHIND RIGHT HAND TRIM

X086D EARTH HEADER 1

POS.	WIRE NUMBER	CIRCUIT REFERENCE
1	57CF (B)	EARTH (ALL)

NOTE: *For the wiring color code refer to,* ***Wiring harness - Overview (A.30.A)****.*

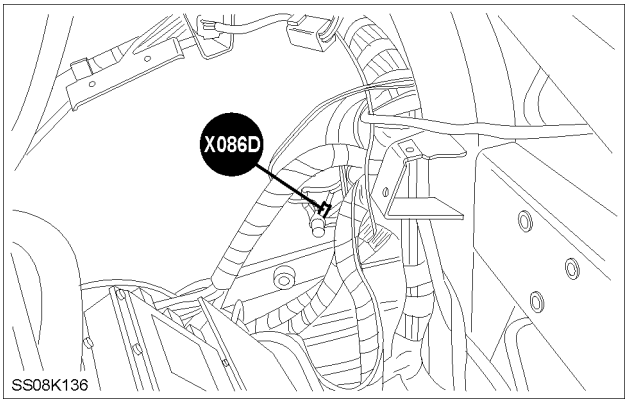

SS08K136 17

BRI4474B 18

BEHIND RIGHT HAND TRIM

https://tractormanualz.com/

X088 ARMREST 2

POS.	WIRE NUMBER	CIRCUIT REFERENCE
A1	181L (G) / 181P (W)	BLOWER MOTOR FEED
A2	5400BJ (Y) / 5400H (Y)	CAN H
A3	5420BJ (G) / 5420H (G)	CAN L
A4	5500V (R) / 5500D (R)	EHR CAN HIGH
A5	5510V (U) / 5510D (U)	EHR CAN LOW
B1	57AD (B) / 57 (B)	EARTH (ALL)
C2	5915F (B)	EDC VALVE SUPPLY
C3	5900F (Y) / 5900F (G)	ISO BUS CAN SIGNAL LOW
C4	5910F (G) / 5910F (Y)	ISO BUS CAN SIGNAL HIGH
C5	5920F (R)	ISO BUS CAN SUPPLY POSITIVE

NOTE: *For the wiring color code refer to,* ***Wiring harness - Overview (A.30.A)****.*

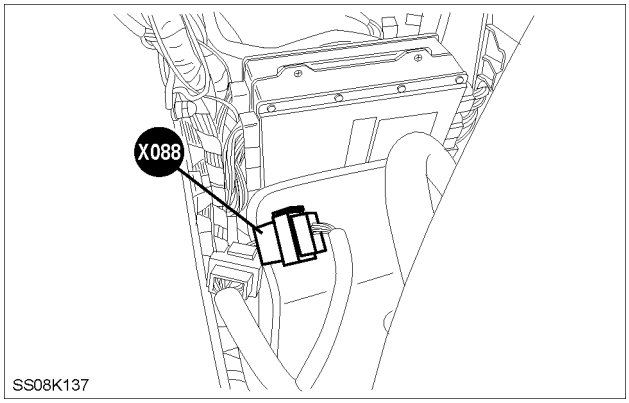

SS08K137 19

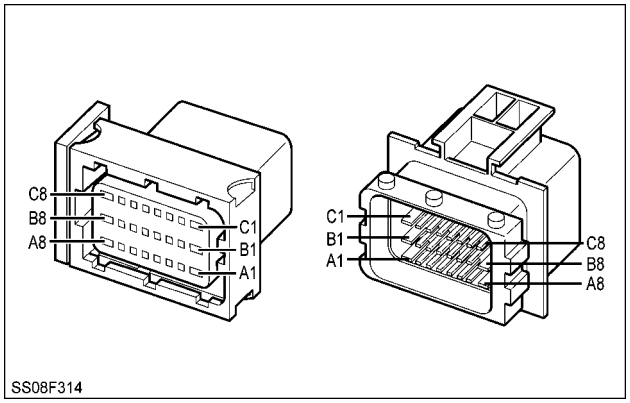

SS08F314 20

BEHIND RIGHT HAND TRIM

https://tractormanualz.com/

Connector - Component diagram 09

X091 CCM CENTRAL CONTROL UNIT (CN2)

POS.	WIRE NUMBER	CIRCUIT REFERENCE
1	7915 (L)	TCM CLUTCH B RETURN
2	7225 (W)	TRANS HI RANGE SOL - RET
3	7935 (L)	TCM CLUTCH D RETURN
4	5087 (K)	EDC VALVE UP RETURN
5	5097 (K)	EDC VALVE DOWN RETURN
6	7925 (L)	TCM CLUTCH C RETURN
7	7982 (W)	TCM CLUTCH C RETURN
8	7900 (TQ)	CLUTCH 'A' SIGNAL
14	2062 (W)	PTO TWIST SENSOR
15	2151 (K)	EPTO DRIVE RELAY UPPER SPEED
16	3168 (O)	AUTO GUIDANCE DUMP SOLENOID FEED (HSD)
17	2152 (K)	ESPTO DRIVE RELAY LOWER SPEED
20	2140 (O)	PTO SPEED SENSOR
21	57W (B)	EARTH (ALL)
23	6355 (R)	+5V LOW POWER REFERENCE
24	6315 (N)	REVERSIBLE FAN OPTION - RELAY CONTROL
26	57X (B)	EARTH (ALL)

NOTE: *For the wiring color code refer to,* ***Wiring harness - Overview (A.30.A)****.*

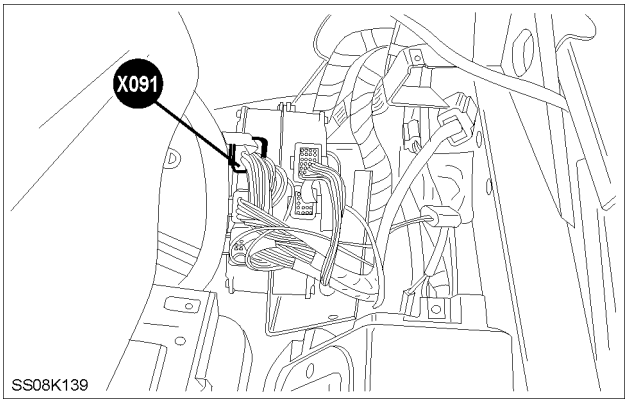

SS08K139 1

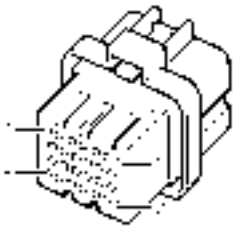

BRI4416B-02 2

BEHIND OPERATOR'S SEAT

https://tractormanualz.com/

X092 CCM CENTRAL CONTROL UNIT (CN1a)

POS.	WIRE NUMBER	CIRCUIT REFERENCE
1	7000C (U)	TRANS CONTROL SUPPLY
2	7000D (U)	TRANS CONTROL SUPPLY
3	7000E (U)	TRANS CONTROL SUPPLY
4	7431 (TQ)	SUPPLY
5	5085 (K)	EDC VALVE UP
6	7920 (TQ)	CLUTCH 'C' SIGNAL
7	7930 (TQ)	CLUTCH 'D' SIGNAL
8	7660 (R)	TRANS CLUTCH DISCONNECT
9	7220 (S)	TRANSMISSION HIGH RANGE
11	7910 (TQ)	CLUTCH 'B' SIGNAL
12	5090 (K)	EDC VALVE DOWN
13	7980 (K)	TRANS MED. RANGE
14	5000A (L)	EDC MEMORY POWER
15	5400T (Y)	CAN H
16	5420T (G)	CAN L
19	61 (O)	CASE GROUND
20	5200A (N)	EDC VALVE SUPPLY
21	5500H (R)	EHR CAN HIGH
22	5510H (U)	EHR CAN LOW
23	60 (B/W)	SENSOR GROUND
25	57Y (B)	EARTH (ALL)
26	57Z (B)	EARTH (ALL)

NOTE: *For the wiring color code refer to,* ***Wiring harness - Overview (A.30.A)****.*

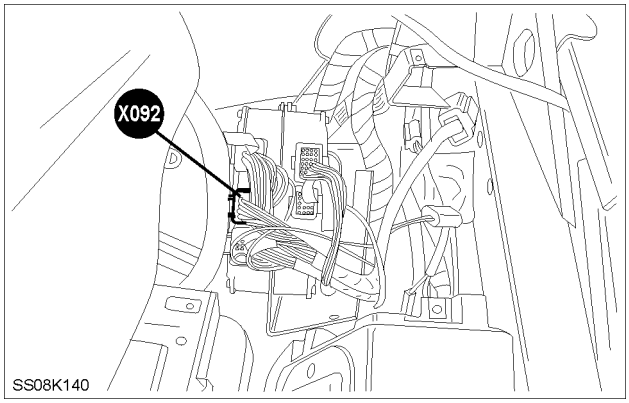

SS08K140 3

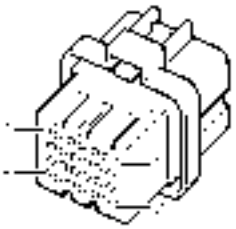

BRI4416B-02 4

BEHIND OPERATOR'S SEAT

https://tractormanualz.com/

X093 CCM CENTRAL CONTROL UNIT (CN1b)

POS.	WIRE NUMBER	CIRCUIT REFERENCE
1	6402 (G)	ECU TO THROTTLE POT. VAR
2	5080 (K)	EDC ROCKSHAFT
7	2012 (Y)	TRANS OIL PRESSURE WARNING LAMP
9	5065 (TN)	EDC RIGHT PIN
10	5070 (TN)	EDC LEFT PIN
11	2050K (G)	PTO SUPPLY / DOG SUPPLY
12	7250 (S)	TRANSMISSION FORWARD SIGNAL
13	7260 (S)	TRANSMISSION REVERSE SIGNAL
14	7500 (G)	TRANS OIL TEMP. SENSOR
16	5020 (TN)	EDC PROC +5V REF VOLTAGE DROP POSN/RATE
17	7525 (G)	TRANS SENSOR SUPPLY 5v
19	2031 (Y)	RADAR PRESENT
21	1001 (W)	STARTER SOLENOID FEED
22	820B (R)	STOPLAMP SWITCH LH
23	830B (R)	STOPLAMP SWITCH RH
25	5075 (K)	EDC VOLTAGE TO PINS
27	7420A (Y)	TCM TO CLUTCH POSITION SWITCH
29	5100 (K)	EDC EXTERNAL SWITCH UP
30	5095 (K)	EDC EXTERNAL SWITCH DOWN
33	2028B (G)	RADAR ASSEMBLY (GUN) SIGNAL
34	7401 (L	TRANS RPM SPEED SENSOR

NOTE: *For the wiring color code refer to,* ***Wiring harness - Overview (A.30.A)****.*

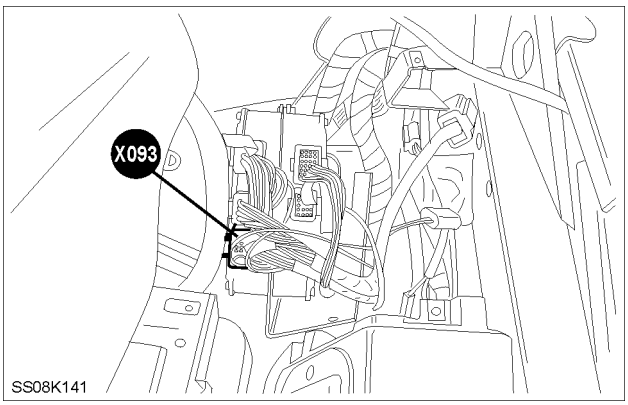

SS08K141 5

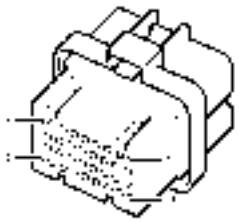

BRI4420B 6

BEHIND OPERATOR'S SEAT

https://tractormanualz.com/

X094 CCM CENTRAL CONTROL UNIT (CN3a)

POS.	WIRE NUMBER	CIRCUIT REFERENCE
1	7589 (U)	BRAKE PRESSURE SIGNAL
2	7970 (L)	TRANS MED/REV
3	2059 (W)	FENDER PTO SWITCH INPUT
8	7775 (K)	B CLUTCH PRESSURE SIGNAL
9	7785 (O)	A CLUTCH PRESSURE SIGNAL
10	7584 (U)	PARKLOCK SENSOR SWITCH SIGNAL
12	2045 (O)	PTO SWITCH TO MODULE
13	2046 (O)	PTO SWITCH (VCC)
14	2007 (Y)	AIR CONDITIONER LOW PRESSURE
15	1039 (LTG)	NASO LIGHTS INPUT
16	5595 (S)	EHR MASTER STOP SWITCH
17	5210 (O)	EDC VALVE ENABLE
18	2056 (W)	PTO FENDER PTO SWITCH ON
20	2159 (U)	PTO UPPER SPEED

NOTE: *For the wiring color code refer to,* ***Wiring harness - Overview (A.30.A)****.*

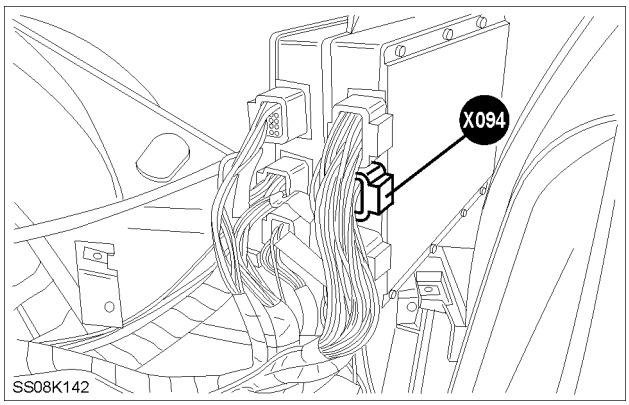

SS08K142 7

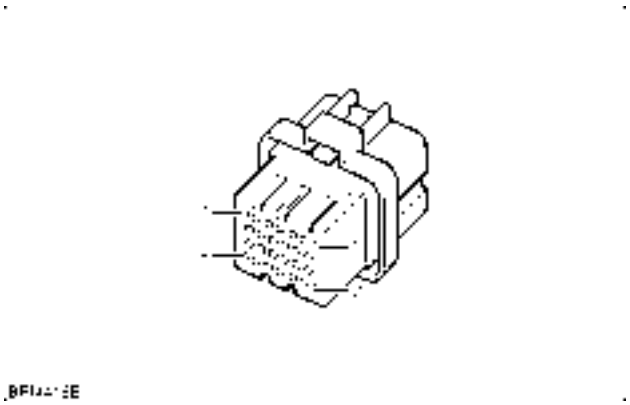

BRI4416B-02 8

BEHIND OPERATOR'S SEAT

https://tractormanualz.com/

X095 CCM CENTRAL CONTROL UNIT (CN3b)

POS.	WIRE NUMBER	CIRCUIT REFERENCE
1	7945 (L)	TCM CLUTCH E RETURN
2	9036 (TN)	50KPH DUMP SOLENOID RETURN
3	7235 (Y)	TRANS LOW RANGE SOL - RET
4	8045 (L)	TRANS REV SOL RET
5	9035 (TN)	50KPH DUMP SOLENOID
6	9033 (TN)	50KPH SOLENOID+
7	7985 (G)	TRANS REVERSE RANGE
8	2130 (N)	PTO BRAKE SOLENOID
9	7080 (LTG)	DIFF-LOCK SOLENOID FEED
10	9034 (TN)	50KPH SOLENOID-
12	7586 (U)	PARKLOCK SOLENOID
13	7940 (TQ)	CLUTCH 'E' SIGNAL
14	2042 (O)	PTO SOLENOID-REAR
15	7230 (S)	TRANSMISSION LOW RANGE
17	3024 (Y)	2WD SOLENOID
18	2051 (O)	PTO SOLENOID RETURN (-)
19	7411 (Y)	TRANS HYDROSTAT INPUT SPEED SENSOR (CVT)
20	7400 (Y)	TRANS RPM SPEED SENSOR TO TCM INPUT
21	6300 (N)	FAN SPEED
22	7760 (W)	TORQUE SENSOR
24	2120 (TN)	PTO BRAKE SIGNAL
25	7000J (U)	TRANS CONTROL SUPPLY
26	7295 (W)	DRIVE DISABLE SIGNAL
27	2065 (N)	PTO ENGAGED
32	6404 (G)	THROTTLE POT. TO LOW IDLE SWITCH
33	2055A (W)	PTO SYNCHRO GROUND SPEED ENGAGED
34	7000K (U)	TRANS CONTROL SUPPLY

NOTE: *For the wiring color code refer to,* ***Wiring harness - Overview (A.30.A)****.*

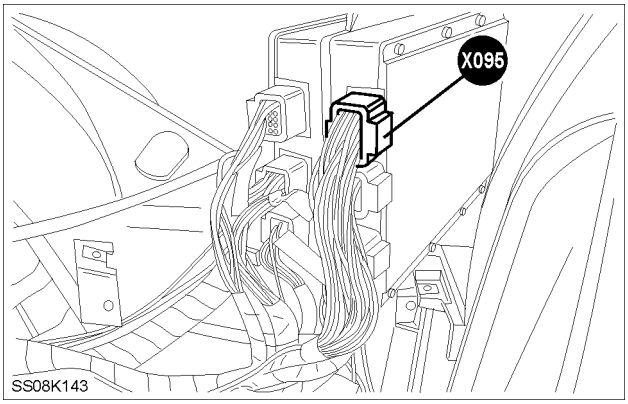

SS08K143 9

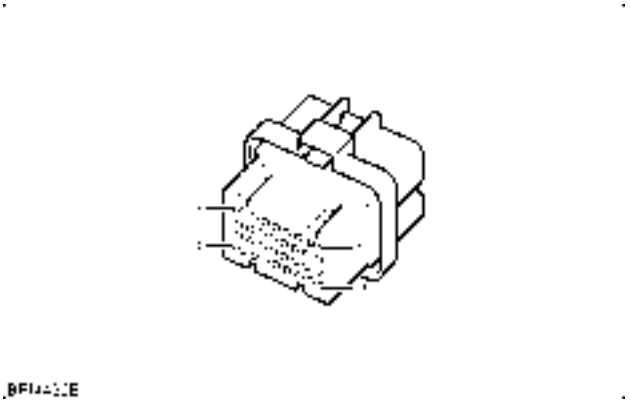

BRI4420B 10

BEHIND OPERATOR'S SEAT

https://tractormanualz.com/

X096 CASE EARTH CCM & ACU

POS.	WIRE NUMBER	CIRCUIT REFERENCE
1	61,61A,61G (O,B/O,B)	CASE GROUND

NOTE: *For the wiring color code refer to,* ***Wiring harness - Overview (A.30.A)****.*

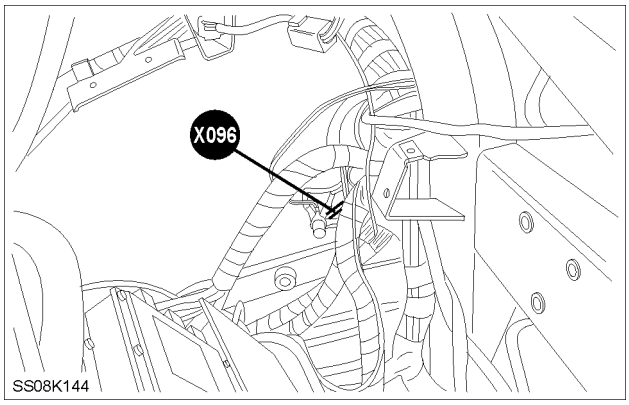

SS08K144 11

BRI4404B 12

BEHIND RIGHT HAND TRIM

X097 CCM CENTRAL CONTROL UNIT (CN4)

POS.	WIRE NUMBER	CIRCUIT REFERENCE
4	2157 (U)	ESPTO NEUTRAL
6	3169 (O)	AUTO GUIDANCE DUMP SOLENOID RETURN (CURSEN)
7	2155 (N)	ESPTO ACTUATOR POWER +12V
8	2156 (N)	ESPTO ACTUATOR POS SIGNAL
9	2069 (O)	PTO MANAGEMENT ON
10	3014C (R)	HANDBRAKE WARNING LAMP SIGNAL
14	7960 (W)	TRANS SLOW/FAST
16	7730 (TN)	NOT IN PARKLOCK
18	2158 (U)	ESPTO LOWER SPEED
20	7430 (Y)	CLUTCH POSITION SIGNAL
21	5830 (R)	HIGH FLOW PUMP LINK
24	5835 (S)	HYDRAULIC MASTER SWITCH HIGH FLOW PUMP LINK
25	5840 (W)	FRONT HITCH DETECT INPUT

NOTE: *For the wiring color code refer to,* ***Wiring harness - Overview (A.30.A)****.*

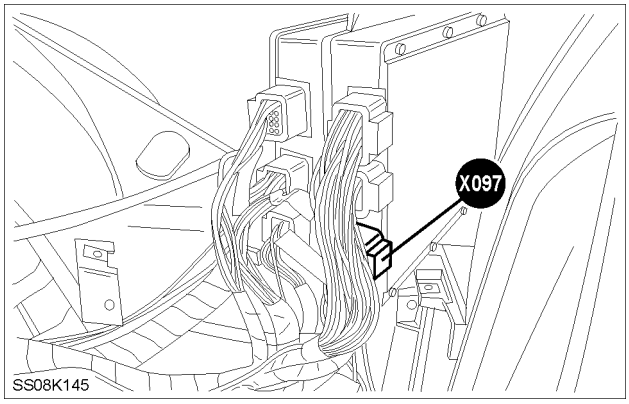

SS08K145 13

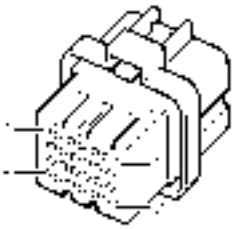

BRI4416B-02 14

BEHIND OPERATOR'S SEAT

https://tractormanualz.com/

X098 ACU AUXILIARY CONTROL UNIT (CN2)

POS.	WIRE NUMBER	CIRCUIT REFERENCE
1	3250 (O)	RAISE SOLENOID RET
3	3286 (TN)	SUSPENSION LOCKOUT SOLENOID LOWER RETURN (-)
6	3281 (TN)	SUSPENSION LOCKOUT SOLENOID UPPER RETURN (-)
7	2044 (O)	PTO SOLENOID-FRONT RETURN(-)
13	3270 (O)	LOWER SOLENOID RET
19	2270 (O)	PTO FRONT - WARNING LAMP
21	57BN (B)	EARTH (ALL)
26	57BP (B)	EARTH (ALL)

NOTE: *For the wiring color code refer to,* ***Wiring harness - Overview (A.30.A)****.*

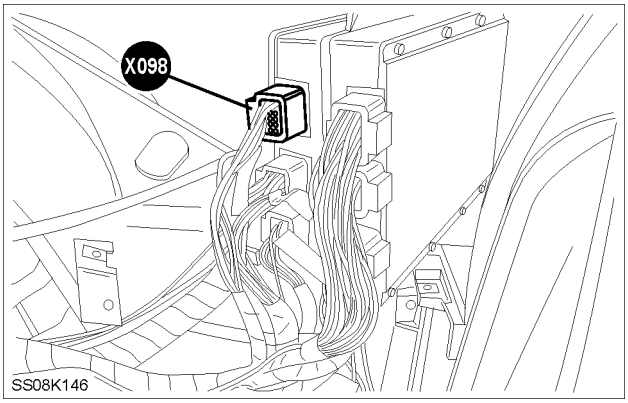

SS08K146 15

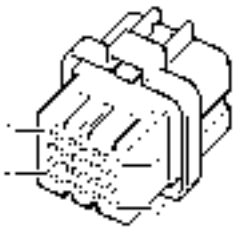

BRI4416B-02 16

BEHIND OPERATOR'S SEAT

https://tractormanualz.com/

X099 ACU AUXILIARY CONTROL UNIT (CN1a)

POS.	WIRE NUMBER	CIRCUIT REFERENCE
1	2540S (N)	FRONT HITCH +12v IGN
2	2540T (N)	FRONT HITCH +12v IGN
3	2540W (N)	FRONT HITCH +12v IGN
6	3280 (O)	SUSPENSION LOCKOUT SOLENOID UPPER
7	3285 (TN)	SUSPENSION LOCKOUT SOLENOID LOWER
8	2250K (K)	PTO FRONT - SUPPLY
10	3260 (O)	LOWER SOLENOID PWR
11	3240 (O)	RAISE SOLENOID PWR
12	2570 (R)	FRONT HITCH RAISE SOLENOID
13	2043 (O)	PTO SOLENOID-FRONT
14	5000B (L)	EDC MEMORY POWER
15	5400S (Y)	CAN H
16	5420S (G)	CAN L
19	61G (B)	CASE GROUND
20	5200N (N)	EDC VALVE SUPPLY
21	5500G (R)	EHR CAN HIGH
22	5510G (U)	EHR CAN LOW
23	60AA (B/W)	SENSOR GROUND
25	57BR (B)	EARTH (ALL)
26	57BS (B)	EARTH (ALL)

NOTE: *For the wiring color code refer to,* ***Wiring harness - Overview (A.30.A)****.*

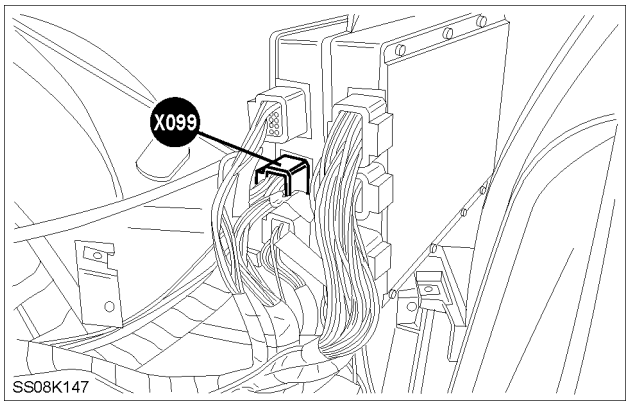

SS08K147 17

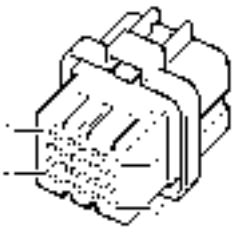

BRI4416B-02 18

BEHIND OPERATOR'S SEAT

https://tractormanualz.com/

Connector - Component diagram 10

X100 ACU AUXILIARY CONTROL UNIT (CN1b)

POS.	WIRE NUMBER	CIRCUIT REFERENCE
2	2510 (N)	FRONT HITCH POSITION SIGNAL
5	3235 (O)	ACCELEROMETER SIGNAL
6	3230 (U)	AXLE HEIGHT SENSOR POSITION
11	2248 (K)	PTO FRONT - SWITCH (VCCS)
12	2245 (K)	PTO FRONT - SWITCH TO MODULE (MOM)
16	2530 (N)	FRONT HITCH V REF
17	5520A (LTG)	EHR 5V Ref.
19	2591 (TN)	EXTERNAL SWITCH FHPL DOWN
21	1001Z (W)	STARTER SOLENOID FEED
22	2556 (N)	FRONT HITCH SWITCH COMMON RAIL
23	3295 (O)	FRONT SUSPENSION PRESSURE SWITCH SIGNAL
26	2590 (TN)	EXTERNAL SWITCH FHPL UP

NOTE: *For the wiring color code refer to,* ***Wiring harness - Overview (A.30.A)****.*

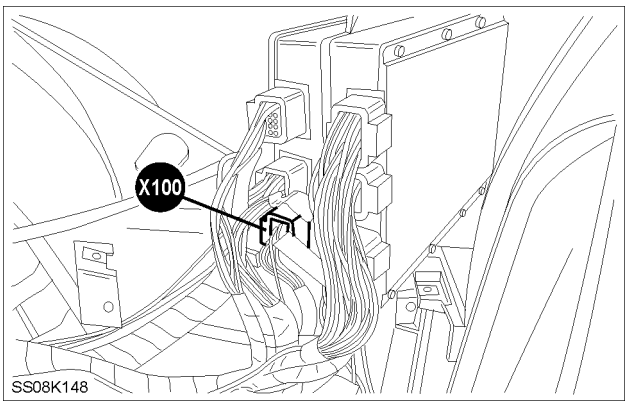

SS08K148 1

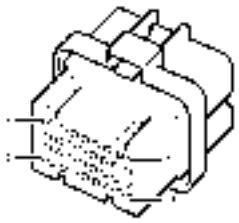

BRI4420B 2

IN CAB RIGHT HAND BEHIND OPERATOR'S SEAT

https://tractormanualz.com/

X101 ACU AUXILIARY CONTROL UNIT (CN3b)

POS.	WIRE NUMBER	CIRCUIT REFERENCE
5	4054 (W)	LINK LEVEL DUMP SOLENOID
6	4056 (W)	LINK LEVEL TOP LINK RETRACT SOLENOID
7	4058 (W)	LINK LEVEL RIGHT LINK LOWER SOLENOID
14	4055 (W)	LINK LEVEL TOP LINK EXTEND SOLENOID
15	4057 (W)	LINK LEVEL RIGHT LINK RAISE SOLENOID
25	2250C (K)	PTO FRONT - SUPPLY
34	2250B (K)	PTO FRONT - SUPPLY

NOTE: *For the wiring color code refer to,* ***Wiring harness - Overview (A.30.A)****.*

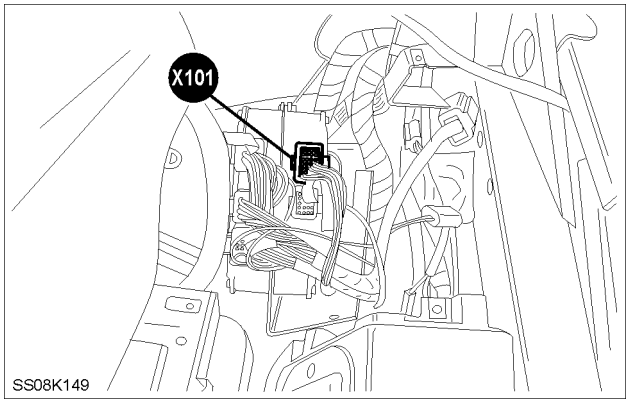

SS08K149 3

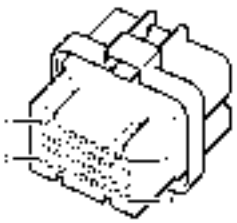

BRI4420B 4

IN CAB RIGHT HAND BEHIND OPERATOR'S SEAT

X102 ACU AUXILIARY CONTROL UNIT (CN3a)

POS.	WIRE NUMBER	CIRCUIT REFERENCE
16	5574 (L)	FENDER 3RD EHR SWITCH – UP
17	5576 (L)	FENDER 3RD EHR SWITCH – DOWN

NOTE: *For the wiring color code refer to,* ***Wiring harness - Overview (A.30.A)****.*

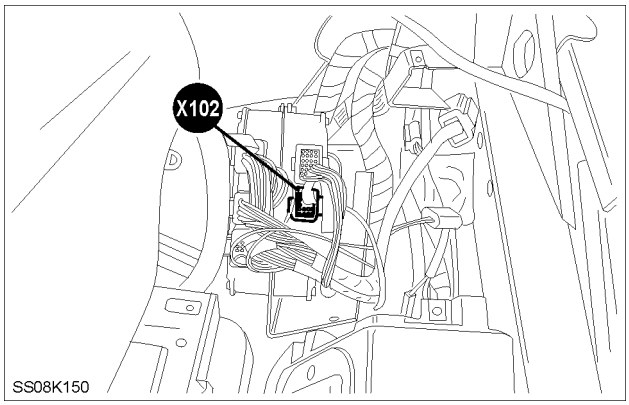

SS08K150 5

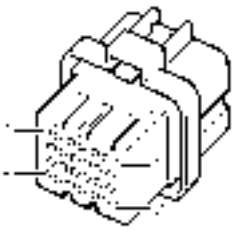

BRI4416B-01 6

IN CAB RIGHT HAND BEHIND OPERATOR'S SEAT

https://tractormanualz.com/

X106 ROOF TO CAB HARNESS - ROOF

POS.	WIRE NUMBER	CIRCUIT REFERENCE
A1	998D (G) / 998 (G)	WORK LAMP-REAR FEED (INNER)
A2	28 (Y)	WIPER MOTOR (PARK RETURN)
A3	56 (W)	WIPER MOTOR-HIGH
A4	58 (R)	WIPER MOTOR-LOW
A5	1019A (G) / 1019 (G)	WINDSHIELD WIPER FEED
A6	1038B (TN) / 1038 (TN)	WINDSHIELD WIPER FEED-REAR
A7	1120 (G)	RR WINDSHIELD WIPER PARK RETURN
A8	4011 (L)	ROTATING BEACON SWITCH SUPPLY
B1	1013B (R) / 1013 (R)	RIGHT HAND LAMPS
B2	249 (LTG)	SMV LAMPS RH
B3	666A (L) / 666 (L)	DOMELAMP SWITCH FEED
B4	1090 (R)	REAR WORKLAMP RELAY SIGNAL
B5	1092 (R)	FRONT WORKLAMP RELAY SIGNAL
B6	1925C (R) / 1925 (R)	MIRROR CONTROL +12V
B7	1071B (L)	WORKLAMP FRONT FEED
B8	1071A (L)	WORKLAMP FRONT FEED
C1	1014D (R) / 1014 (R)	LEFT HAND LAMPS
C2	250 (LTG)	SMV LAMPS LH
C3	138A (L) / 138 (L)	RADIO KAM
C4	3079 (R)	RADIO +12V IGNITION
C5	1927A (R) / 1927 (R)	MIRROR ILLUMINATION
C6	3052 (L) / -	DOME LAMP TO DOOR SWITCH
C7	1013AH (R)	RIGHT HAND LAMPS

NOTE: *For the wiring color code refer to,* ***Wiring harness - Overview (A.30.A)****.*

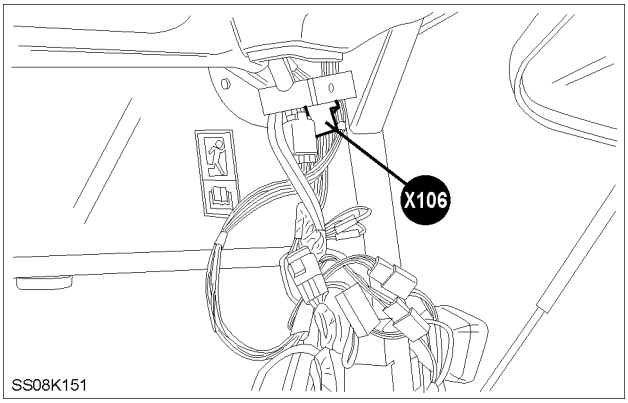

SS08K151 7

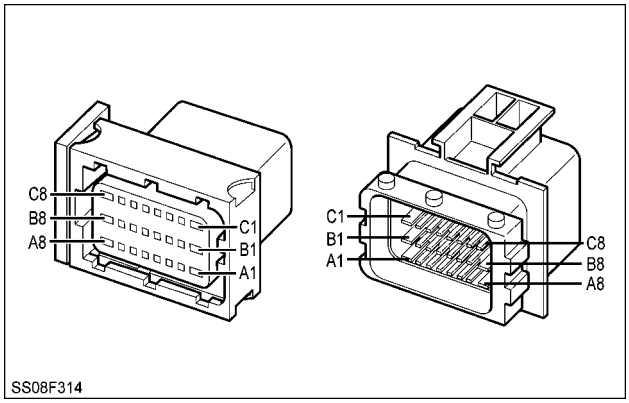

SS08F314 8

REAR RIGHT HAND C-PILLAR

https://tractormanualz.com/

X107 AUX HEADLAMP SWITCH

POS.	WIRE NUMBER	CIRCUIT REFERENCE
1	1030A (U)	HEADLAMP DIP BEAM

NOTE: *For the wiring color code refer to,* ***Wiring harness - Overview (A.30.A)****.*

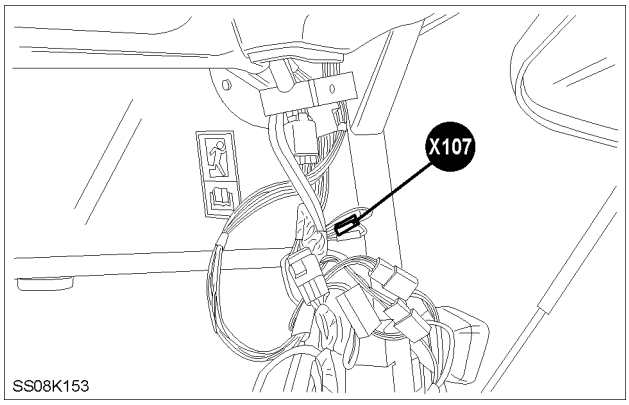

SS08K153 9

BRI4437B 10

REAR RIGHT HAND C-PILLAR

X107_A AUX HEADLAMP SWITCH

POS.	WIRE NUMBER	CIRCUIT REFERENCE
1	1030A (U)	HEADLAMP DIP BEAM

NOTE: For the wiring color code refer to, **Wiring harness - Overview (A.30.A)**.

IMAGE NOT AVAILABLE

INA 11

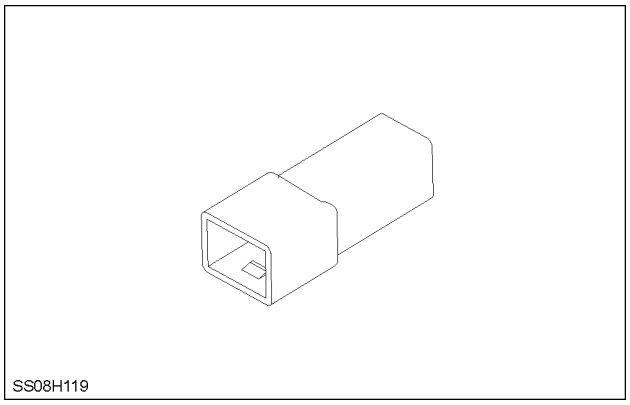

SS08H119 12

REAR RIGHT HAND C-PILLAR

https://tractormanualz.com/

X108 AUX HEADLAMP SWITCH

POS.	WIRE NUMBER	CIRCUIT REFERENCE
1	1027A (U)	HEADLAMP MAIN BEAM

NOTE: *For the wiring color code refer to,* ***Wiring harness - Overview (A.30.A)****.*

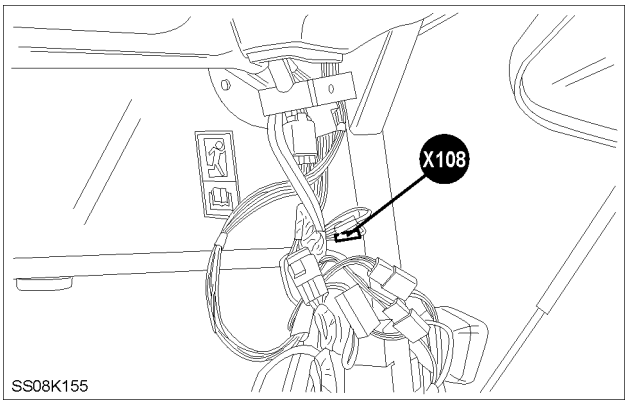

SS08K155 13

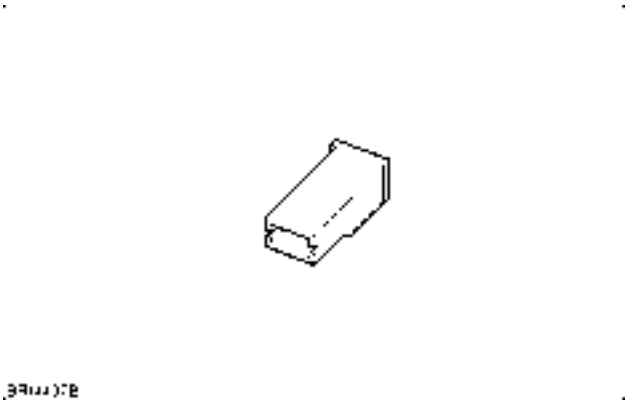

BRI4437B 14

REAR RIGHT HAND C-PILLAR

X108_A AUX HEADLAMP SWITCH

POS.	WIRE NUMBER	CIRCUIT REFERENCE
1	1027A (U)	HEADLAMP MAIN BEAM

NOTE: For the wiring color code refer to, **Wiring harness - Overview (A.30.A)**.

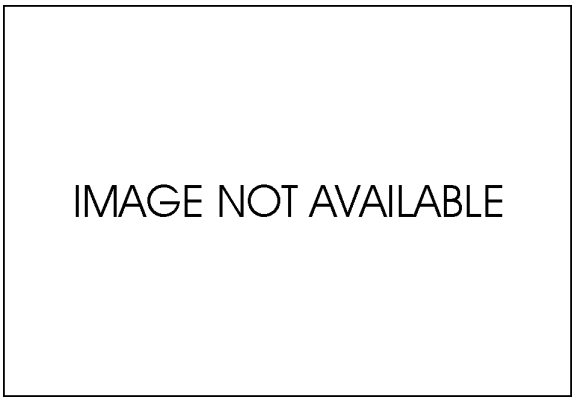

INA 15

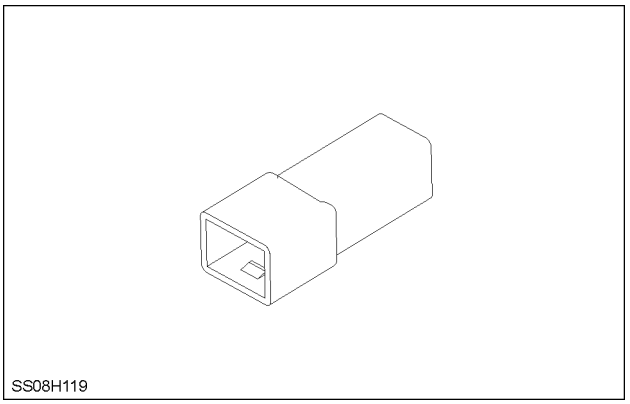

SS08H119 16

REAR RIGHT HAND C-PILLAR

https://tractormanualz.com/

Connector - Component diagram 11

X110 RIGHT HAND FENDER CONNECTOR 2 HPL RAISE/LOWER SWITCH

POS.	WIRE NUMBER	CIRCUIT REFERENCE
1	5100B (K) / 5100 (K)	EDC EXTERNAL SWITCH UP
2	5200B (N) / 5200 (N)	EDC VALVE SUPPLY
3	5095A (K) / 5095 (K)	EDC VALVE DOWN EDC EXTERNAL SWITCH DOWN
4	2059 (W)	FENDER PTO SWITCH INPUT
5	2050E (G) / 2050 (G)	PTO SUPPLY / DOG SUPPLY
6	2056A (W) / 2056 (W)	PTO FENDER PTO SWITCH ON

NOTE: *For the wiring color code refer to,* ***Wiring harness - Overview (A.30.A)****.*

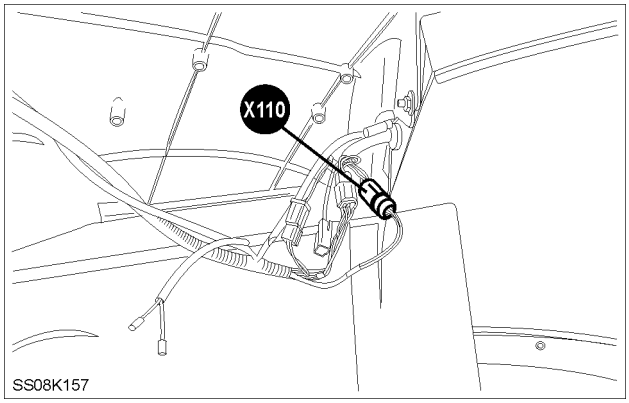

SS08K157 1

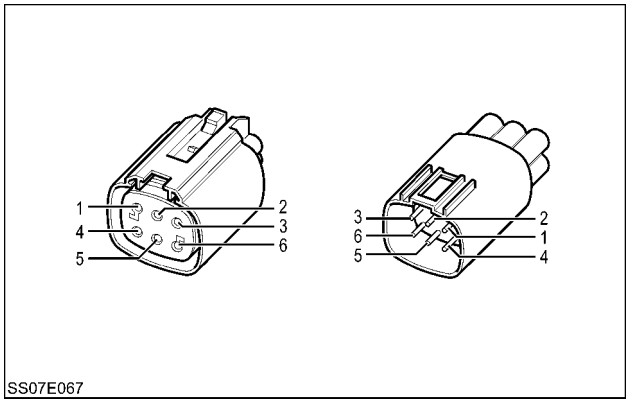

SS07E067 2

RIGHT HAND REAR FENDER

X111 RIGHT HAND FENDER CONNECTOR 1 TAIL LAMP

POS.	WIRE NUMBER	CIRCUIT REFERENCE
1	1013C (R) / 1013 (R)	RIGHT HAND LAMPS
2	810C (G) / 810 (G)	STOPLAMPS
3	3004B (G) / 3004 (G)	RIGHT HAND TURN SIGNAL WARNING LAMP
4	57AV (B)	EARTH (ALL)
5	998B (G) / 998 (G)	WORK LAMP-REAR FEED (INNER)
6	57AP (B)	EARTH (ALL)

NOTE: *For the wiring color code refer to,* ***Wiring harness - Overview (A.30.A)****.*

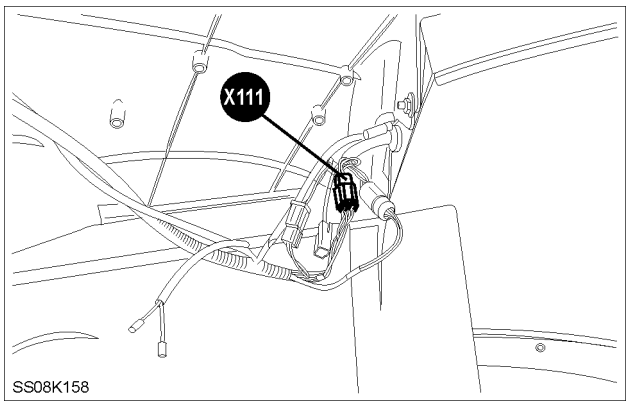

SS08K158 3

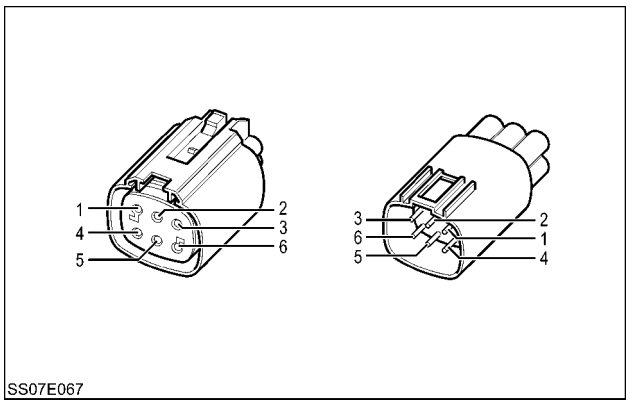

SS07E067 4

RIGHT HAND REAR FENDER

https://tractormanualz.com/

X114 ISO 11786 SIGNAL SOCKET

POS.	WIRE NUMBER	CIRCUIT REFERENCE
1	2320 (L) / 2320 (P/K/Y)	TRUE GROUND SPEED ISO 11786 SKT.PIN#1
2	2300 (L) / 2300 (P/B/Y)	THEORETICAL GROUND SPEED ISO 11786 SKT.PIN#2
3	2330 (L) / 2330 (P/LG/Y)	PTO SPEED ISO11876 SKT.PIN#3
4	2310 (L) / 2310 (P/G/Y)	IN/OUT OF WORK-HPL MODE ISO11786 SKT.PIN#4
5	3062 (L)	IMPLEMENT SOCKET SWITCH
6	1050A (G) / 1050 (G/W)	ACCESSORY FEED
7	61B (B/O) / 61 (B)	CASE GROUND

NOTE: *For the wiring color code refer to,* ***Wiring harness - Overview (A.30.A)****.*

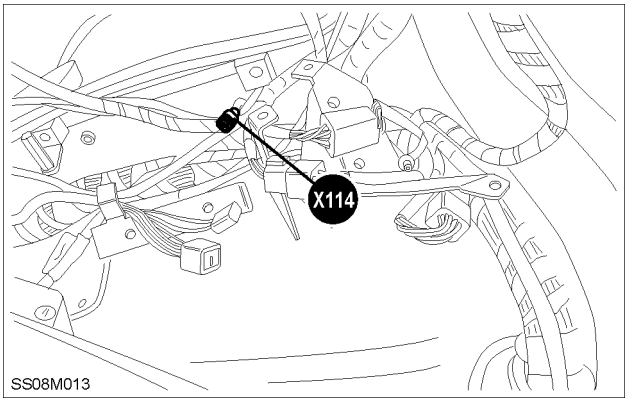

SS08M013 5

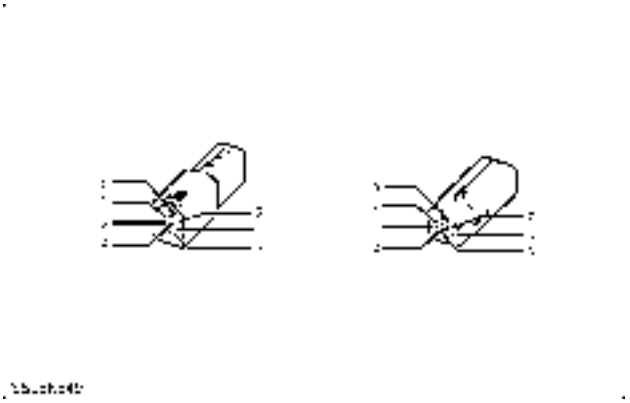

SS08K549 6

BEHIND RIGHT HAND SWITCH PANEL

X115A 30 AMPERE POWER SOCKET POSITIV

POS.	WIRE NUMBER	CIRCUIT REFERENCE
1	150BF (N)	BATTERY FEED (ALL)
2	9032A (Y) / 9032B (Y)	IGN+ TO POWER SKT.

NOTE: *For the wiring color code refer to,* ***Wiring harness - Overview (A.30.A)****.*

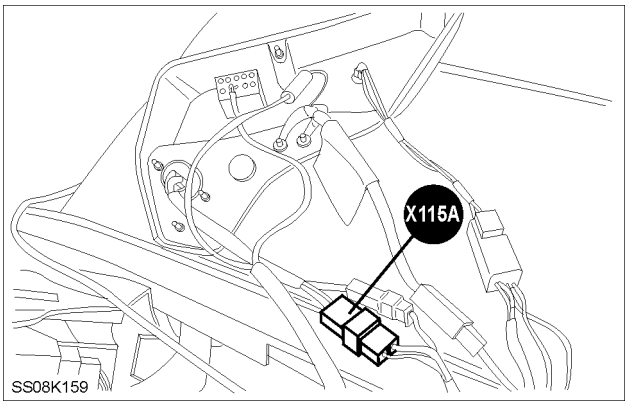

SS08K159 7

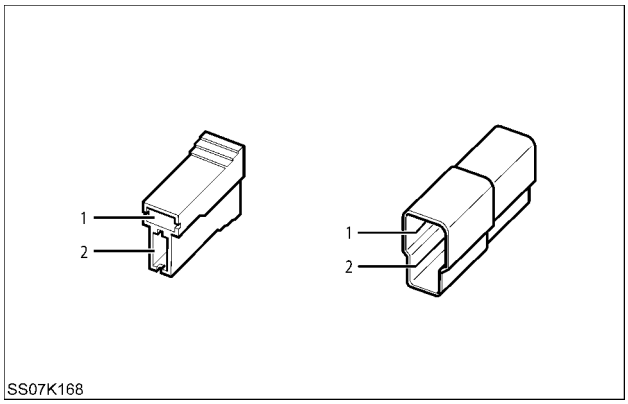

SS07K168 8

BEHIND RIGHT HAND SWITCH PANEL

https://tractormanualz.com/

X115B 30 AMPERE POWER SOCKET NEGATIV

POS.	WIRE NUMBER	CIRCUIT REFERENCE
1	57CW (B) / 57CR (B)	EARTH (ALL)

NOTE: *For the wiring color code refer to,* ***Wiring harness - Overview (A.30.A)****.*

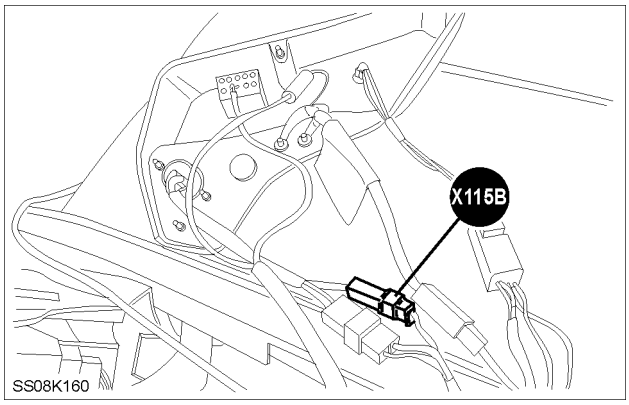

SS08K160 9

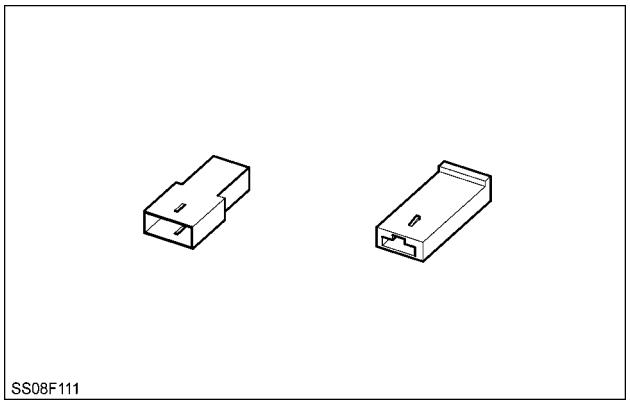

SS08F111 10

BEHIND RIGHT HAND SWITCH PANEL

X116A REAR POWER SOCKET IMPLEMENT POSITIVE

POS.	WIRE NUMBER	CIRCUIT REFERENCE
1	150BF (N)	BATTERY FEED (ALL)
2	9032B (Y)	IGN.+ TO POWER SKT.

NOTE: *For the wiring color code refer to,* ***Wiring harness - Overview (A.30.A)****.*

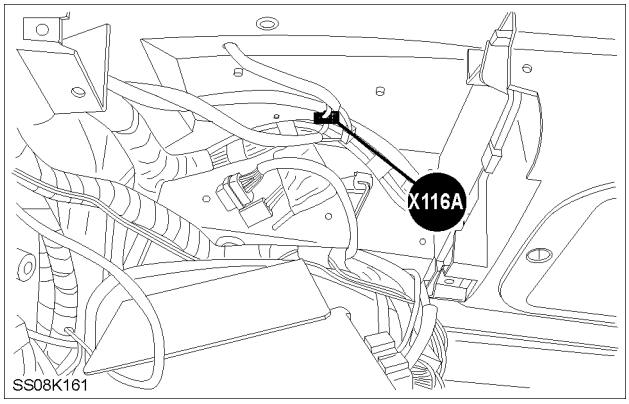

SS08K161 11

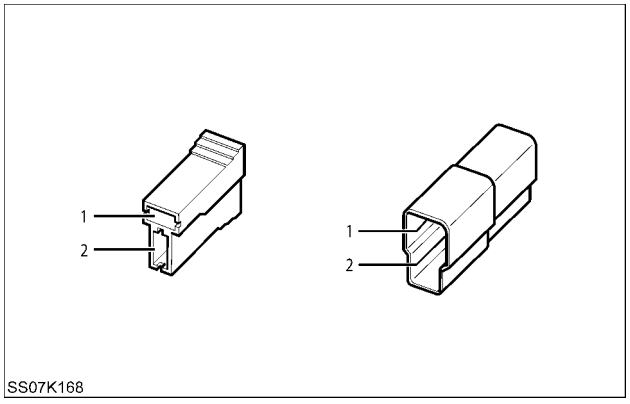

SS07K168 12

CAB RIGHT HAND BEHIND OPERATOR'S SEAT

https://tractormanualz.com/

X116B REAR POWER SOCKET IMPLEMENT NEGATIVE

POS.	WIRE NUMBER	CIRCUIT REFERENCE
1	57CR (B)	EARTH (ALL)

NOTE: *For the wiring color code refer to,* ***Wiring harness - Overview (A.30.A)****.*

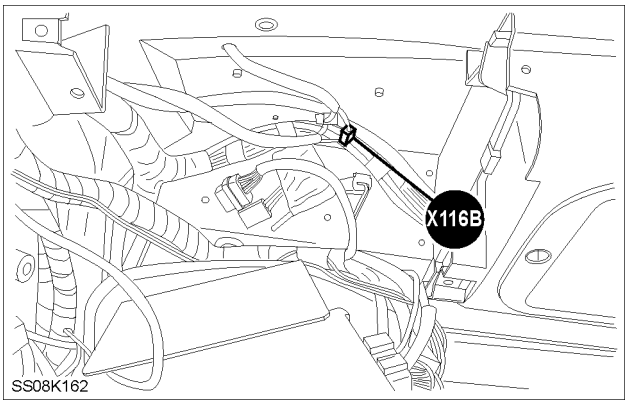

SS08K162 13

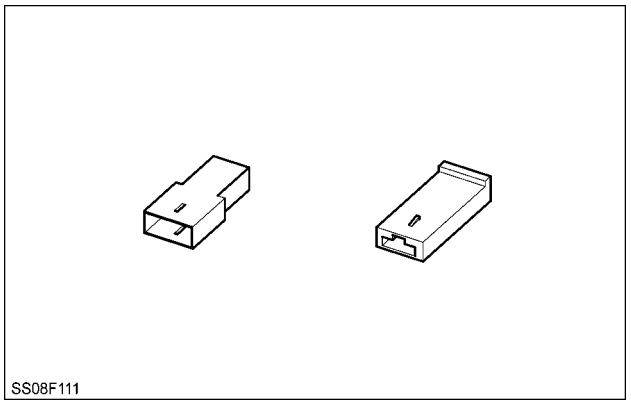

SS08F111 14

CAB RIGHT HAND BEHIND OPERATOR'S SEAT

X117 POWER STUDS

POS.	WIRE NUMBER	CIRCUIT REFERENCE
1	3070A (L) / 3070 (P/W)	'B' PILLAR SKT SUPPLY
2	57PT (B) / 57 (B)	EARTH (ALL)

NOTE: *For the wiring color code refer to,* ***Wiring harness - Overview (A.30.A)****.*

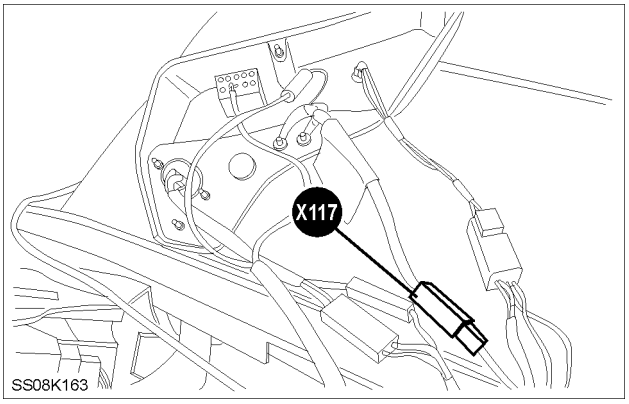

SS08K163 15

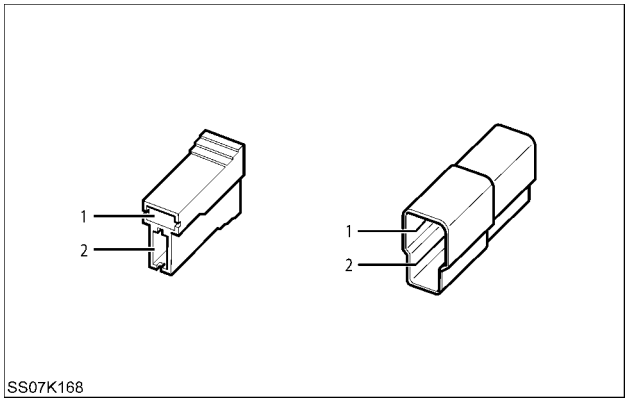

SS07K168 16

BEHIND RIGHT HAND SWITCH PANEL

https://tractormanualz.com/

Connector - Component diagram 12

X121 HAND BRAKE

POS.	WIRE NUMBER	CIRCUIT REFERENCE
1	57BL (B)	EARTH (ALL)
2	3014B (R)	HANDBRAKE WARNING LAMP SIGNAL
3	9031B (L)	ADIC MEMORY B+
4	3150 (W)	HANDBRAKE SWITCH (N.C CONTACT) OFF SIG

NOTE: *For the wiring color code refer to,* ***Wiring harness - Overview (A.30.A)****.*

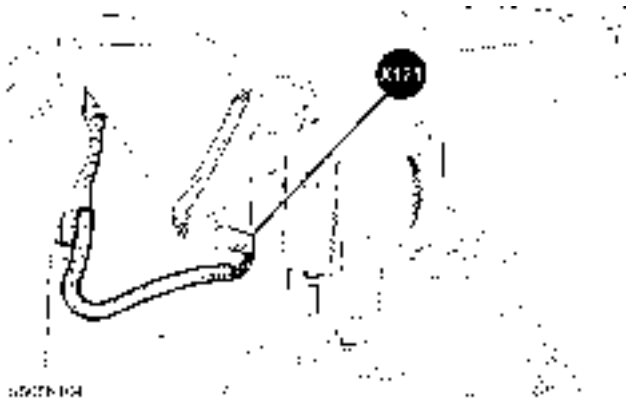

SS08K164 1

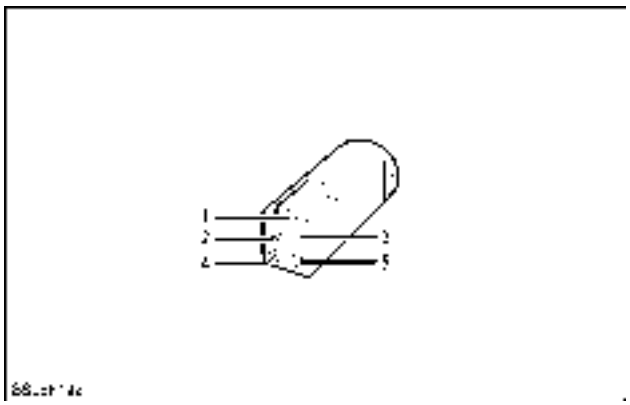

SS08F192 2

LEFT HAND SIDE OPERATOR'S SEAT

X123 WASHER MOTOR REAR

POS.	WIRE NUMBER	CIRCUIT REFERENCE
1	1121A (G)	HANDBRAKE SWITCH (N.C CONTACT) OFF SIG
2	57G (B)	EARTH (ALL)

NOTE: *For the wiring color code refer to,* ***Wiring harness - Overview (A.30.A)****.*

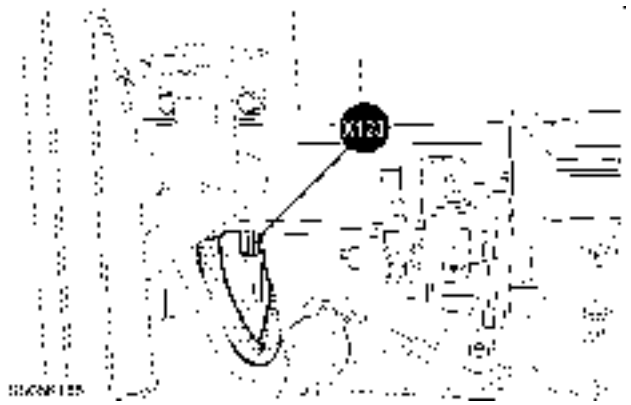

SS08K165 3

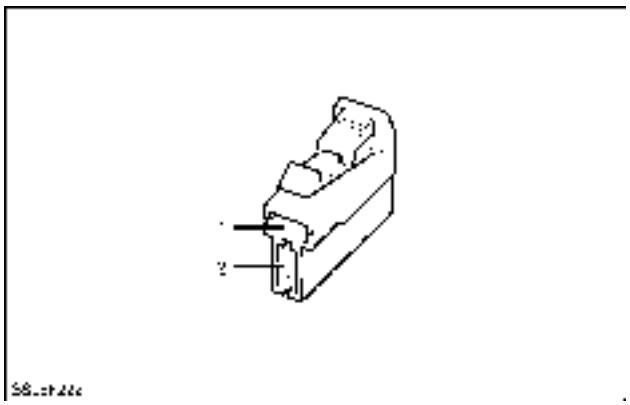

SS08F222 4

REAR OF TRACTOR UNDERNEATH CAB

https://tractormanualz.com/

X125 WASHER MOTOR FRONT

POS.	WIRE NUMBER	CIRCUIT REFERENCE
1	97 (LTG)	WINDSHIELD WASHER FEED
2	57F (B)	EARTH (ALL)

NOTE: *For the wiring color code refer to,* ***Wiring harness - Overview (A.30.A)****.*

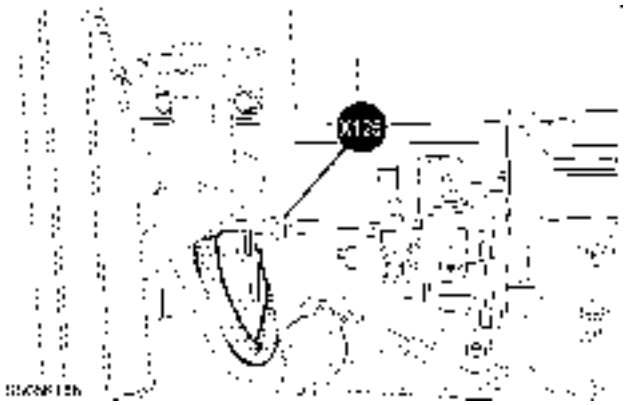

SS08K166 5

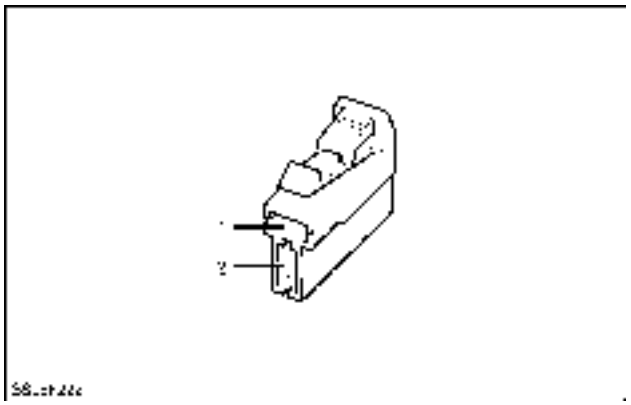

SS08F222 6

REAR OF TRACTOR UNDERNEATH CAB

X126 LEFT HAND FENDER CONNECTOR 1 TAIL LAMP

POS.	WIRE NUMBER	CIRCUIT REFERENCE
1	1014C (R) / 1013 (R)	LEFT HAND LAMPS
2	810B (G) / 810 (G)	STOPLAMPS
3	3005B (G) / 3004 (G)	LEFT HAND TURN SIGNAL WARNING LAMP
4	57AW (B) / 57AY (B)	EARTH (ALL)
5	998A (G) / 998 (G)	WORK LAMP-REAR FEED (INNER)
6	57AN (B) / 57AP (B)	EARTH (ALL)

NOTE: *For the wiring color code refer to,* ***Wiring harness - Overview (A.30.A)****.*

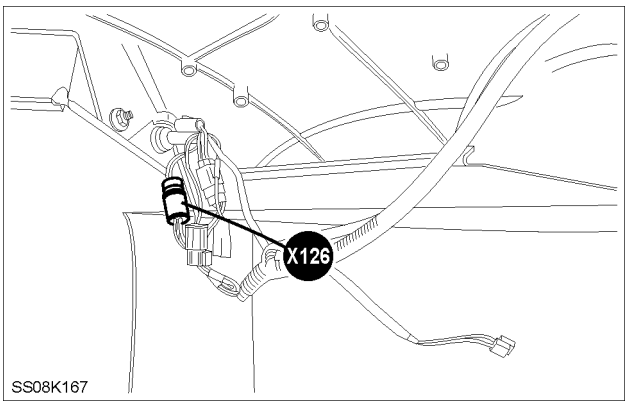

SS08K167 7

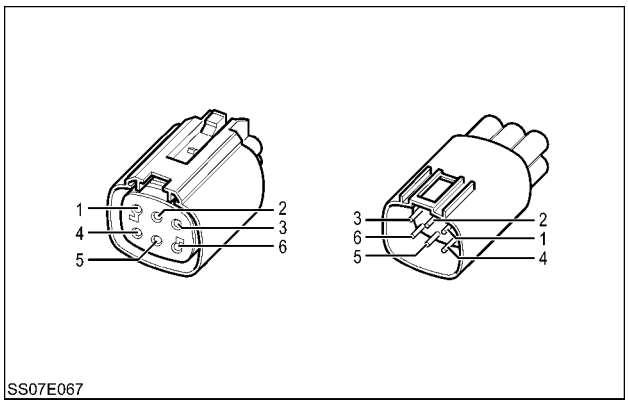

SS07E067 8

LEFT HAND REAR FENDER

https://tractormanualz.com/

X127 LEFT HAND FENDER CONNECTOR 2 HPL RAISE /LOWER SWITCH

POS.	WIRE NUMBER	CIRCUIT REFERENCE
1	5100A (K) / 5100 (K)	EDC EXTERNAL SWITCH UP
2	5200C (N) / 5200 (N)	EDC VALVE SUPPLY
3	5095B (K) / 5095 (K)	EDC EXTERNAL SWITCH DOWN
4	2059 (W)	FENDER PTO SWITCH INPUT
5	2057 (W)	PTO FENDER SWITCH LH - RH LINK
6	2056B (W) / 2056 (W)	PTO FENDER PTO SWITCH ON

NOTE: *For the wiring color code refer to,* ***Wiring harness - Overview (A.30.A)****.*

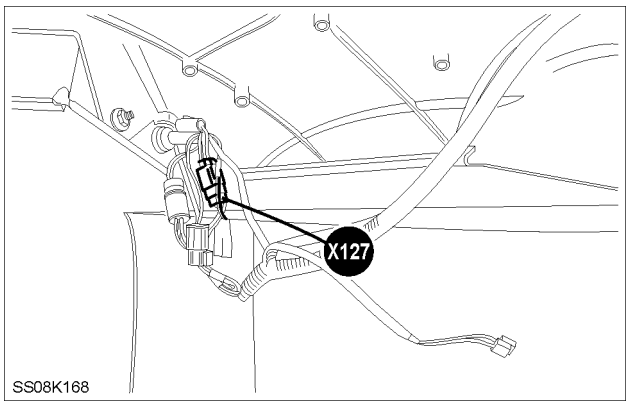

SS08K168 9

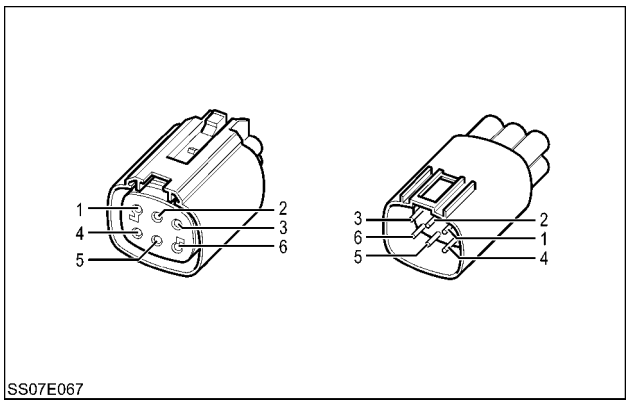

SS07E067 10

LEFT HAND REAR FENDER

https://tractormanualz.com/

Connector - Component diagram 13

X130 CIGAR LIGHTER (ILLUMINATION)

POS.	WIRE NUMBER	CIRCUIT REFERENCE
1	1012G (R)	ILLUMINATION

NOTE: *For the wiring color code refer to,* ***Wiring harness - Overview (A.30.A)****.*

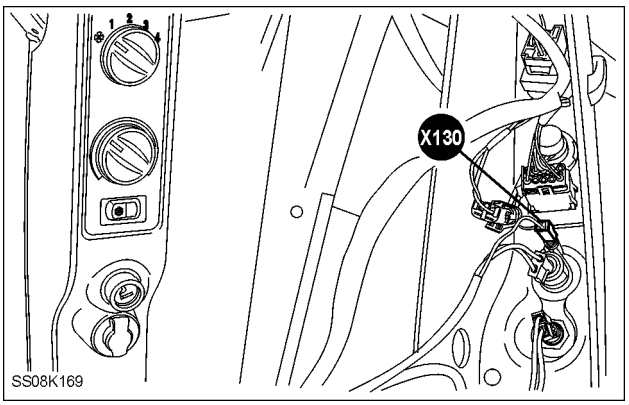

SS08K169 1

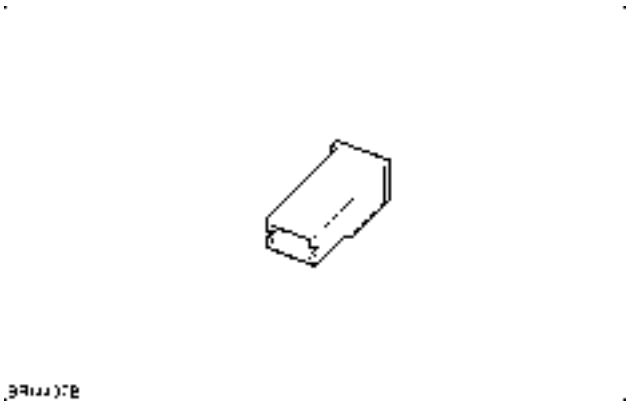

BRI4437B 2

REAR LEFT HAND C-PILLAR

X131 CIGAR LIGHTER (POWER)

POS.	WIRE NUMBER	CIRCUIT REFERENCE
1	3070B (L)	'B' PILLAR SKT SUPPLY
2	57CV (B)	EARTH (ALL)

NOTE: *For the wiring color code refer to,* ***Wiring harness - Overview (A.30.A)****.*

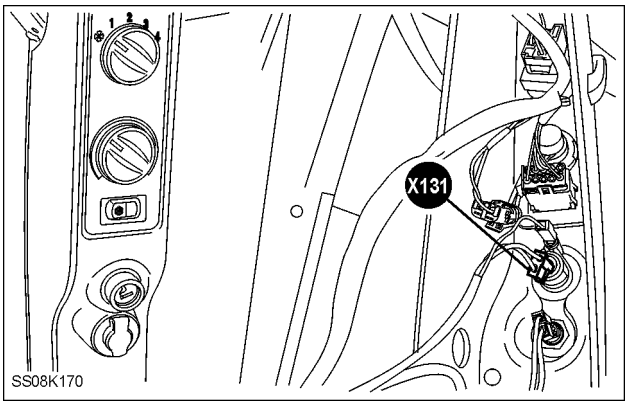

SS08K170 3

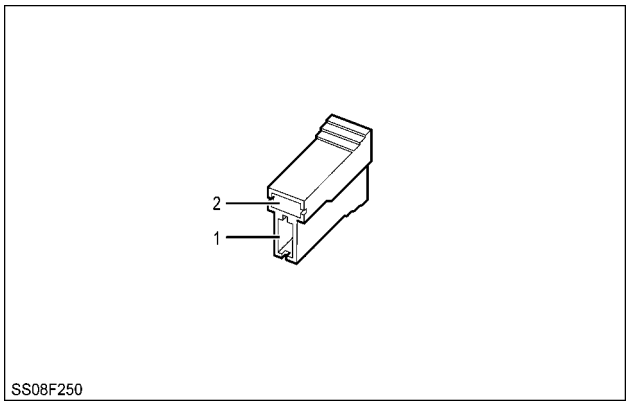

SS08F250 4

REAR LEFT HAND C-PILLAR

https://tractormanualz.com/

X132 8 AMPERE SOCKET

POS.	WIRE NUMBER	CIRCUIT REFERENCE
1	9032C (Y)	IGN+ TO POWER SKT.
2	57CT (B)	EARTH (ALL)

NOTE: *For the wiring color code refer to,* ***Wiring harness - Overview (A.30.A)****.*

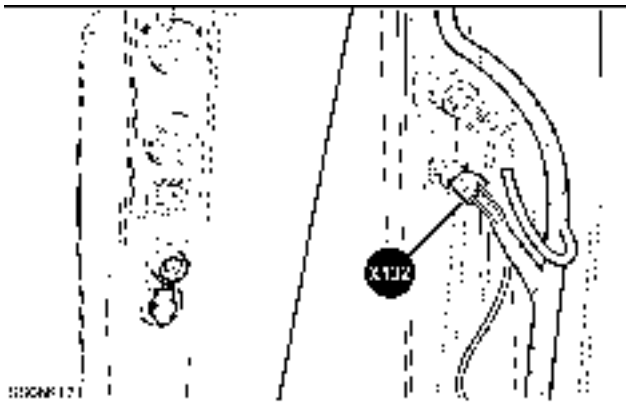

SS08K171 5

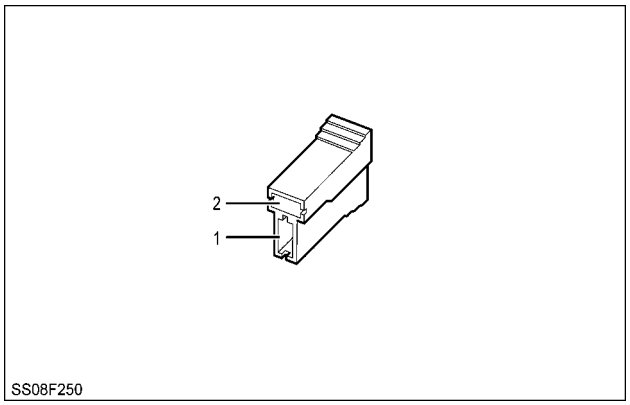

SS08F250 6

REAR LEFT HAND C-PILLAR

https://tractormanualz.com/

Connector - Component diagram 15

X151 ROOF EARTH

POS.	WIRE NUMBER	CIRCUIT REFERENCE
1	57,57A,57B (B)	EARTH (ALL)

NOTE: *For the wiring color code refer to,* ***Wiring harness - Overview (A.30.A)****.*

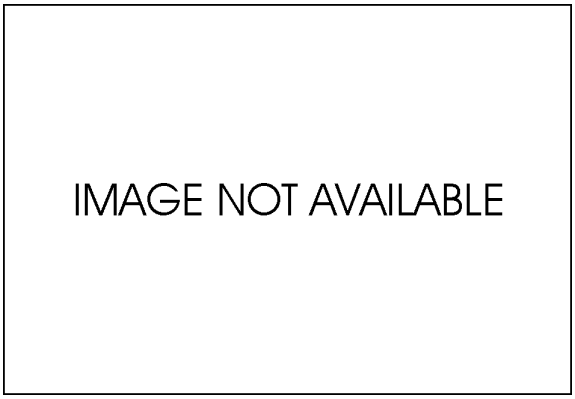

INA 1

BRI4474B 2

BEHIND RIGHT HAND C-PILLAR COVER TOP

X156 CONSOLE LAMP RIGHT HAND

POS.	WIRE NUMBER	CIRCUIT REFERENCE
1	57H (B)	EARTH (ALL)
2	1013B (R)	RIGHT HAND LAMPS

NOTE: *For the wiring color code refer to,* ***Wiring harness - Overview (A.30.A)****.*

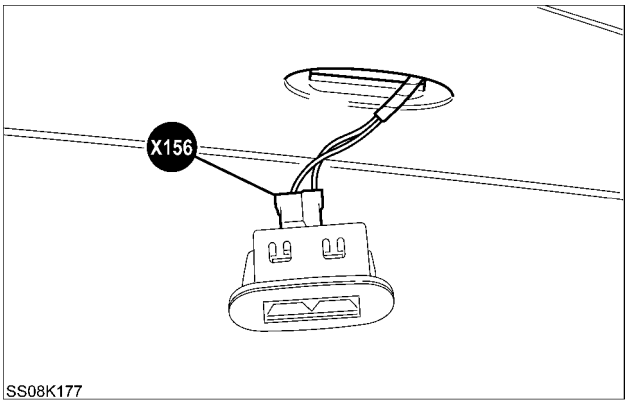

SS08K177 3

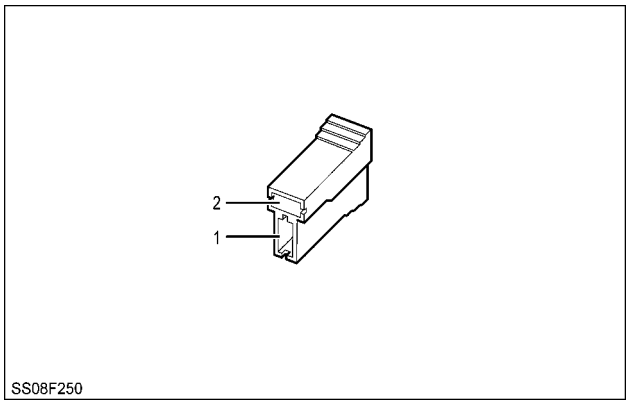

SS08F250 4

RIGHT HAND INSIDE CAB ROOF

https://tractormanualz.com/

X157 RADIO 2

POS.	WIRE NUMBER	CIRCUIT REFERENCE
3	3091 (L)	SPEAKER RR-RHS +
4	3092 (L)	SPEAKER RR-RHS -
5	3097 (G)	SPEAKER RR-LHS +
6	3098 (G)	SPEAKER RR-LHS -

NOTE: *For the wiring color code refer to,* ***Wiring harness - Overview (A.30.A)****.*

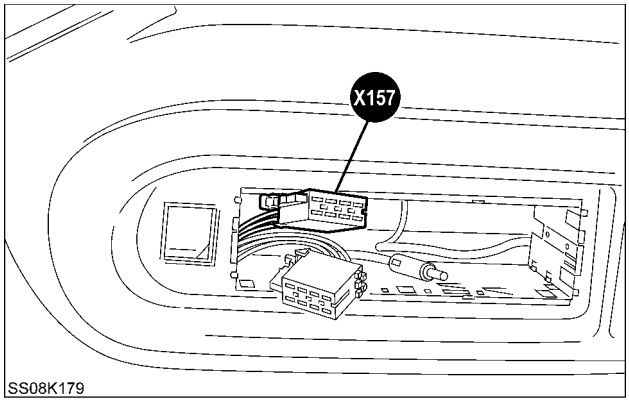

SS08K179 5

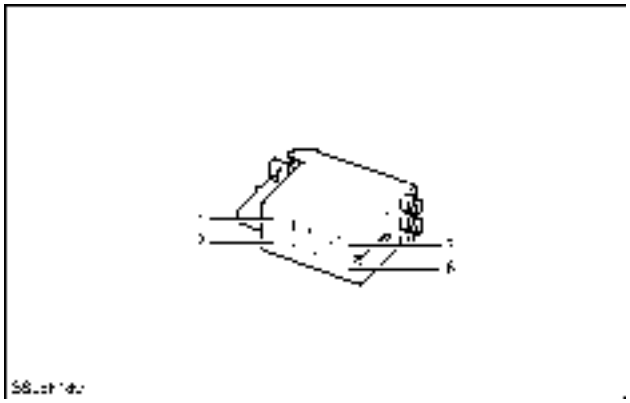

SS08F180 6

RIGHT HAND CAB ROOF

X158 RADIO 1

POS.	WIRE NUMBER	CIRCUIT REFERENCE
4	3077 (Y)	RADIO +12VB
6	3078 (O)	RADIO +12V ILLUMINATION
7	3079A (R)	RADIO +12V IGNITION
8	57 (B)	EARTH (ALL)

NOTE: *For the wiring color code refer to,* ***Wiring harness - Overview (A.30.A)****.*

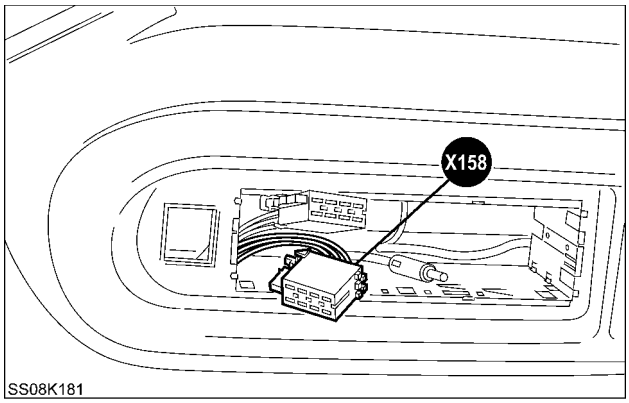

SS08K181 7

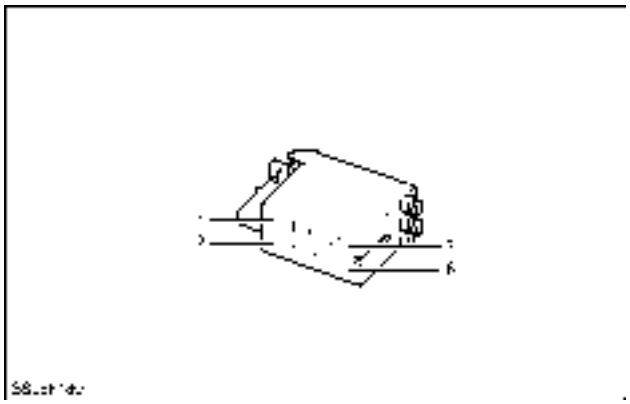

SS08F180 8

RIGHT HAND CAB ROOF

https://tractormanualz.com/

Connector - Component diagram 16

X163 GRABRAIL SIDE LAMP RIGHT HAND

POS.	WIRE NUMBER	CIRCUIT REFERENCE
1	249 (LTG)	SMV LAMPS RH
2	1013C (R)	RIGHT HAND LAMPS
4	57C (B)	EARTH (ALL)

NOTE: *For the wiring color code refer to,* ***Wiring harness - Overview (A.30.A)****.*

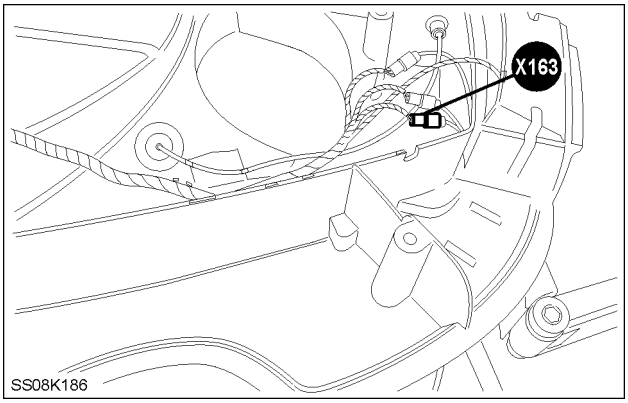

SS08K186 1

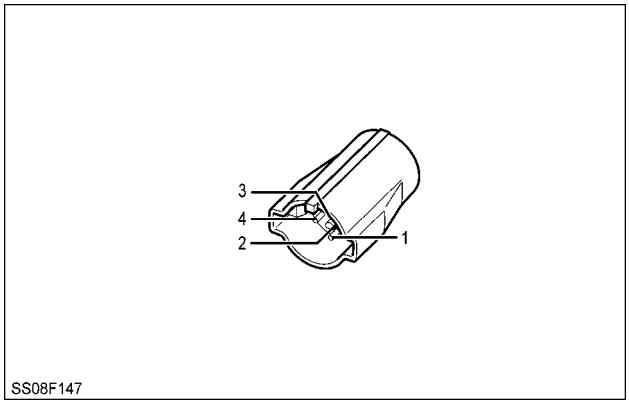

SS08F147 2

RIGHT HAND CAB ROOF

X164 WORKLAMP GRABRAIL RIGHT HAND FRONT

POS.	WIRE NUMBER	CIRCUIT REFERENCE
2	1097B (R)	FEED FRONT WORKLAMP OUTER
4	57L (B)	EARTH (ALL)

NOTE: *For the wiring color code refer to,* ***Wiring harness - Overview (A.30.A)****.*

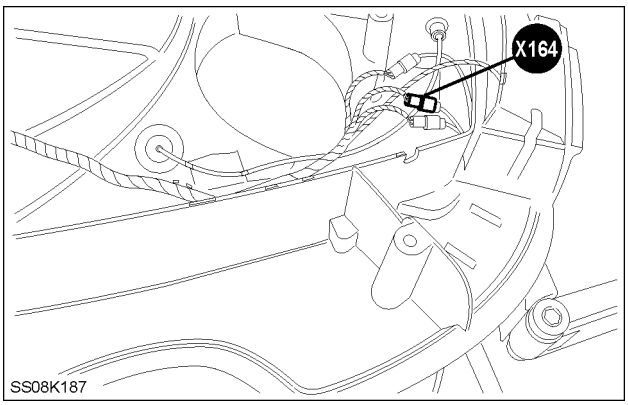

SS08K187 3

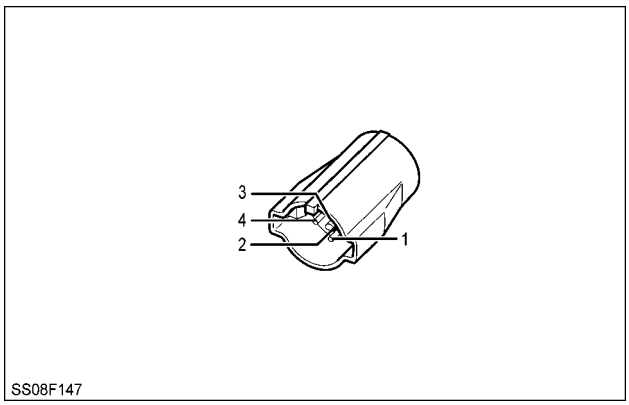

SS08F147 4

RIGHT HAND CAB ROOF

https://tractormanualz.com/

X165 WORKLAMP ROOF FRONT LEFT HAND 2

POS.	WIRE NUMBER	CIRCUIT REFERENCE
A	1098B (W)	FRONT WORKLAMP RELAY GROUND
B	57AA (B)	EARTH (ALL)

NOTE: For the wiring color code refer to, **Wiring harness - Overview (A.30.A)**.

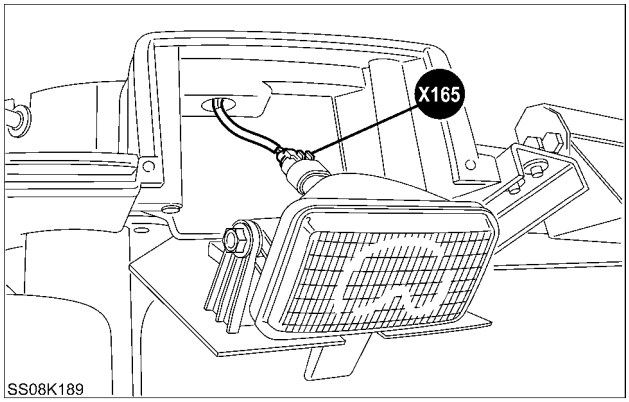

SS08K189 5

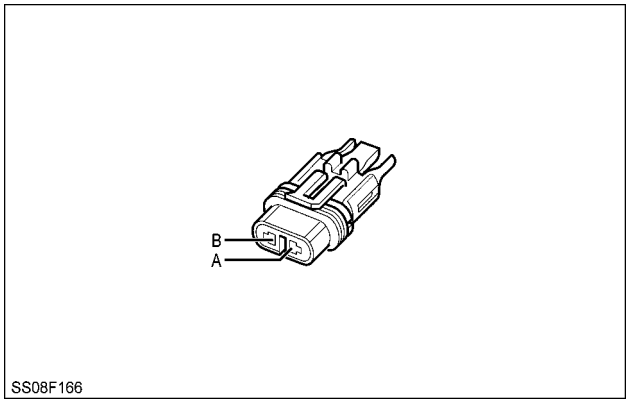

SS08F166 6

FRONT RIGHT HAND CAB ROOF

X166 ELECTRIC MIRROR LEFT HAND

POS.	WIRE NUMBER	CIRCUIT REFERENCE
1	1922A (G)	MIRROR CONTROL COMMON
2	1920 (O)	LH MIRROR CONTROL SIDE-SIDE
3	1921 (Y)	LH MIRROR CONTROL UP-DOWN
4	1927A (R)	MIRROR ILLUMINATION
5	57AC (B)	EARTH (ALL)

NOTE: *For the wiring color code refer to,* ***Wiring harness - Overview (A.30.A)****.*

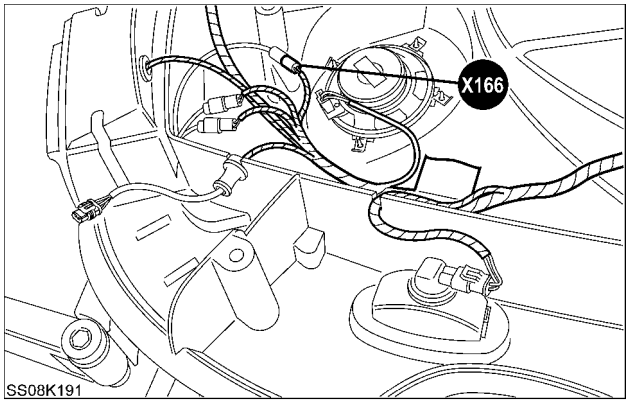

SS08K191 7

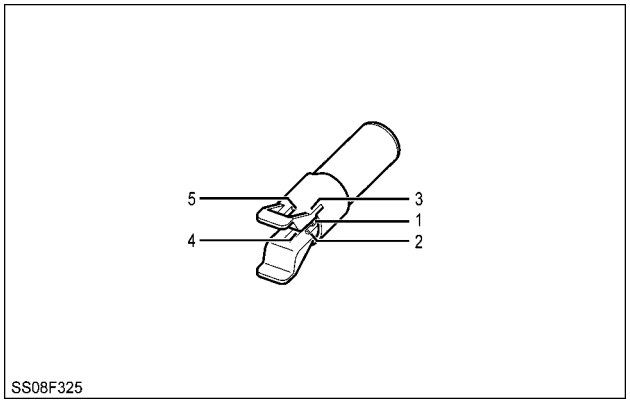

SS08F325 8

LEFT HAND FRONT CAB ROOF

https://tractormanualz.com/

X167 MIRROR CONTROL

POS.	WIRE NUMBER	CIRCUIT REFERENCE
1	1920 (O)	LH MIRROR CONTROL SIDE-SIDE
2	1923 (O)	RH MIRROR CONTROL SIDE-SIDE
4	57AE (B)	EARTH (ALL)
5	1924 (Y)	RH MIRROR CONTROL UP-DOWN
6	1921 (Y)	LH MIRROR CONTROL UP-DOWN
7	1922 (G)	MIRROR CONTROL COMMON
8	1925 (R)	MIRROR CONTROL +12V

NOTE: *For the wiring color code refer to,* ***Wiring harness - Overview (A.30.A)****.*

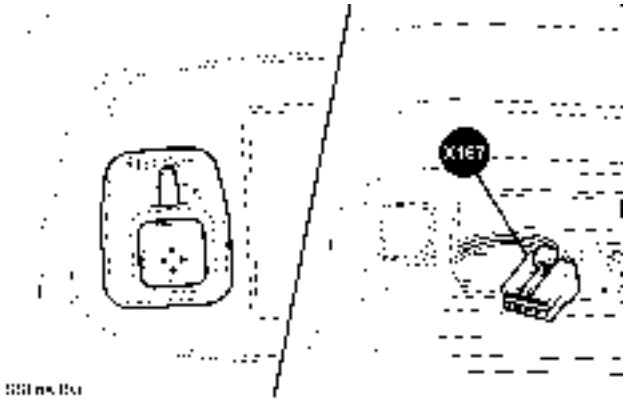

SS08K193 9

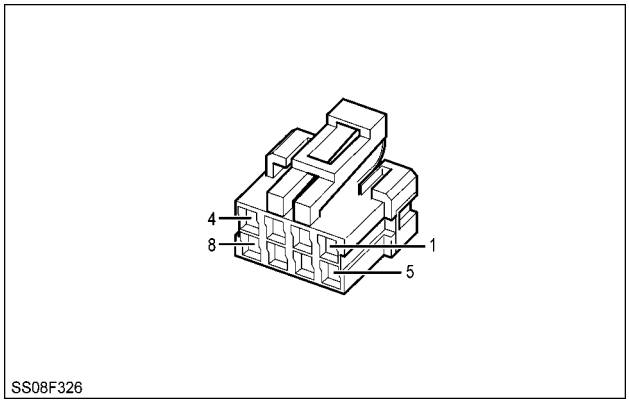

SS08F326 10

CAB ROOF

https://tractormanualz.com/

X168 WORKLAMPS ECU

POS.	WIRE NUMBER	CIRCUIT REFERENCE
B1	4011 (L)	ROTATING BEACON SWITCH SUPPLY
B2	138B (L)	RADIO KAM
B3	57X (B)	EARTH (ALL)
B4	1098A (W)	FRONT WORKLAMP RELAY GROUND
B5	1098B (W)	FRONT WORKLAMP RELAY GROUND
B6	1090 (R)	REAR WORKLAMP RELAY SIGNAL
B7	1097A (R)	FEED FRONT WORKLAMP OUTER
B8	1097B (R)	FEED FRONT WORKLAMP OUTER
C1	997 (G)	WORK LAMP-REAR FEED (OUTER)
C2	4012 (L)	ROTATING BEACON FEED
C3	998A (G)	WORK LAMP-REAR FEED (INNER)
C4	998B (G)	WORK LAMP-REAR FEED (INNER)
C5	1013AH (R)	RIGHT HAND LAMPS
C6	1092 (R)	FRONT WORKLAMP RELAY SIGNAL
C7	1071A (L)	WORKLAMP FRONT FEED
C8	1071B (L)	WORKLAMP FRONT FEED

NOTE: *For the wiring color code refer to,* ***Wiring harness - Overview (A.30.A)****.*

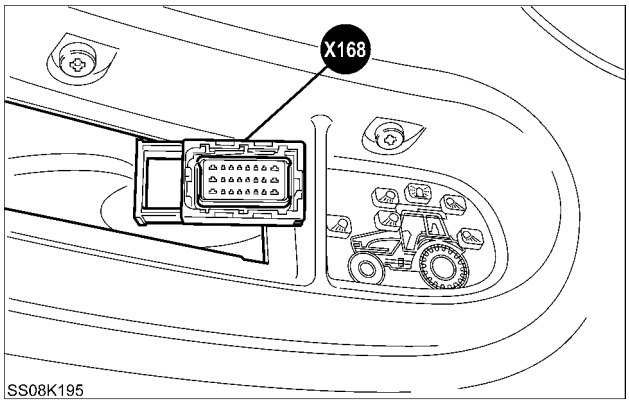

SS08K195 11

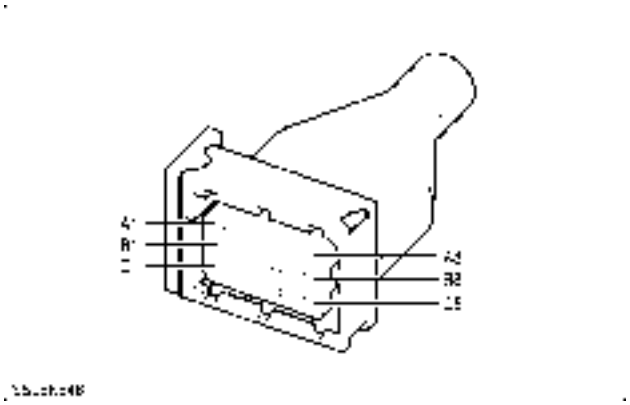

SS08K548 12

CAB ROOF

https://tractormanualz.com/

X169 ELECTRIC MIRROR RIGHT HAND

POS.	WIRE NUMBER	CIRCUIT REFERENCE
1	1922B (G)	MIRROR CONTROL COMMON
2	1923 (O)	RH MIRROR CONTROL SIDE-SIDE
3	1924 (Y)	RH MIRROR CONTROL UP-DOWN
4	1927B (R)	MIRROR ILLUMINATION
5	57AD (B)	EARTH (ALL)

NOTE: *For the wiring color code refer to,* ***Wiring harness - Overview (A.30.A)****.*

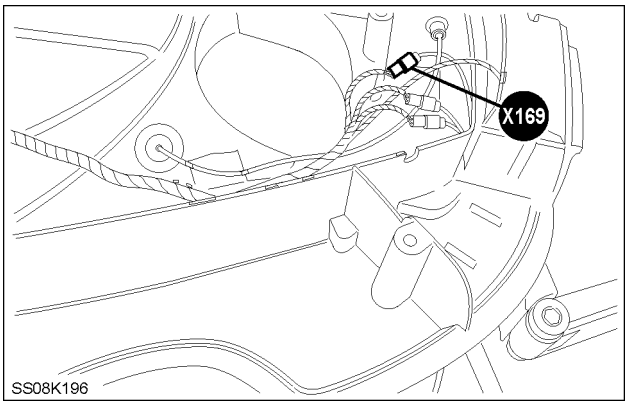

SS08K196 13

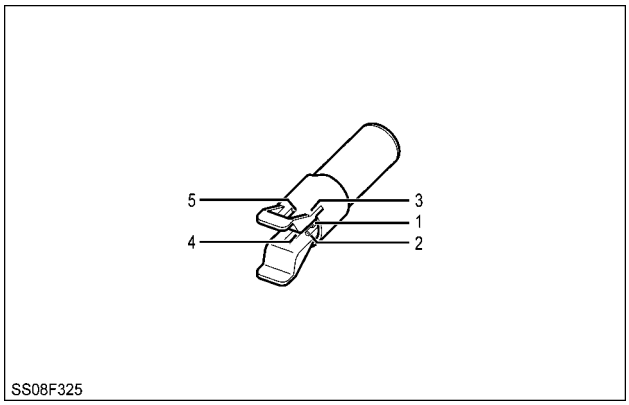

SS08F325 14

FRONT RIGHT HAND CAB ROOF

https://tractormanualz.com/

Connector - Component diagram 17

X170 ROTATING BEACON RIGHT HAND

POS.	WIRE NUMBER	CIRCUIT REFERENCE
1	4012B (L)	ROTATING BEACON FEED
2	57Y (B)	EARTH (ALL)

NOTE: *For the wiring color code refer to,* ***Wiring harness - Overview (A.30.A)****.*

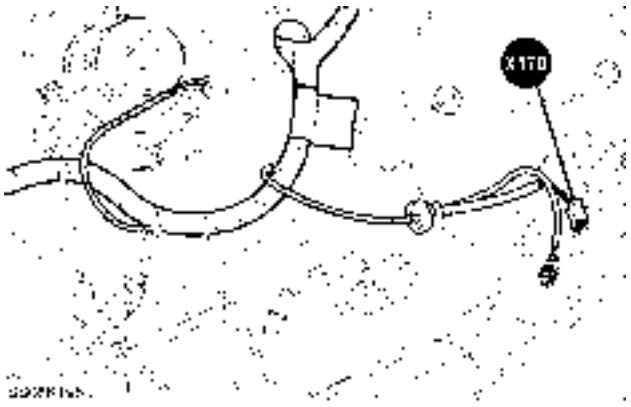

SS08K198 1

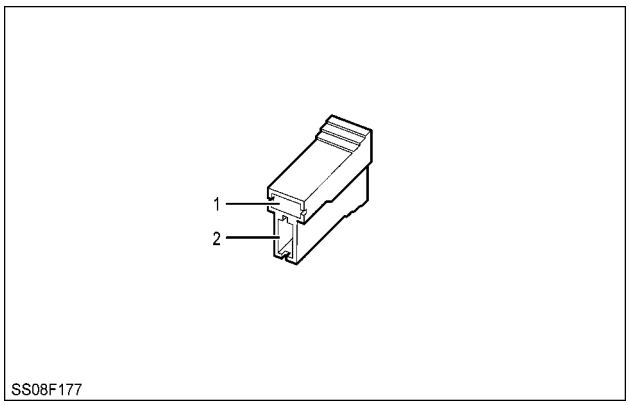

SS08F177 2

RIGHT HAND CAB ROOF

https://tractormanualz.com/

X173 WORKLAMP REAR RIGHT

POS.	WIRE NUMBER	CIRCUIT REFERENCE
2	997B (G)	WORK LAMP-REAR FEED (OUTER)
4	57F (B)	EARTH (ALL)

NOTE: *For the wiring color code refer to,* ***Wiring harness - Overview (A.30.A)****.*

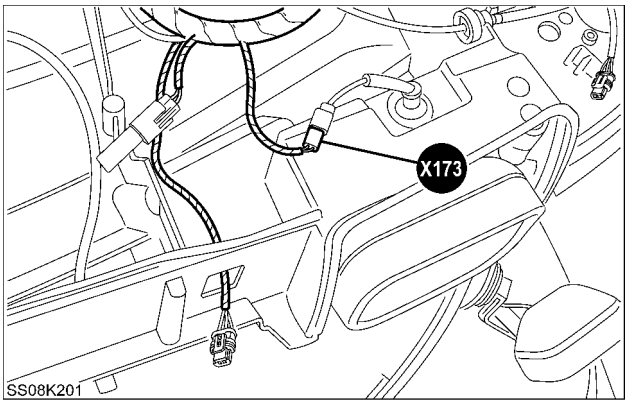

SS08K201 3

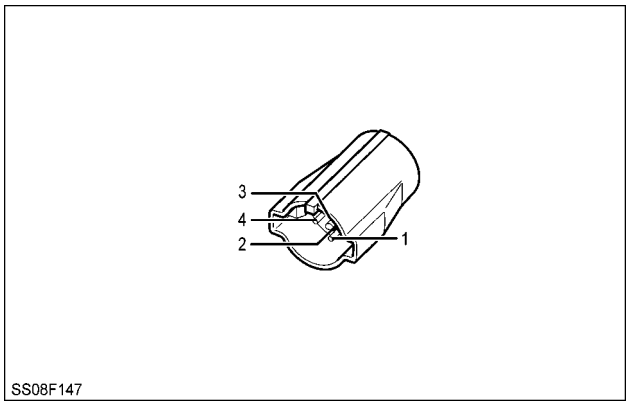

SS08F147 4

REAR RIGHT HAND CAB ROOF

X174 LICENCE PLATE DIODE

POS.	WIRE NUMBER	CIRCUIT REFERENCE
1	978 (W)	LICENCE PLATE LAMP
2	997C (G)	WORK LAMP-REAR FEED (OUTER)

NOTE: For the wiring color code refer to, **Wiring harness - Overview (A.30.A)**.

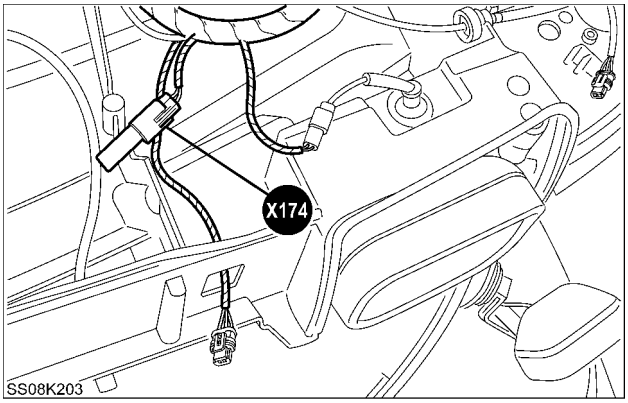

SS08K203 5

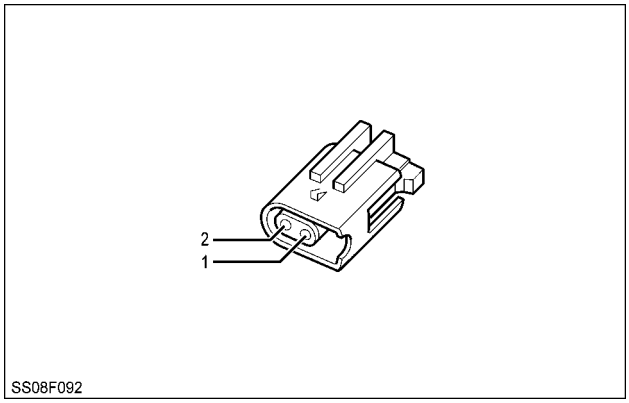

SS08F092 6

REAR RIGHT HAND CAB ROOF

https://tractormanualz.com/

X175 RADIO SPEAKER RIGHT HAND REAR

POS.	WIRE NUMBER	CIRCUIT REFERENCE
1	3091 (L)	SPEAKER RR-RHS +
2	3092 (L)	SPEAKER RR-RHS -

NOTE: *For the wiring color code refer to,* ***Wiring harness - Overview (A.30.A)****.*

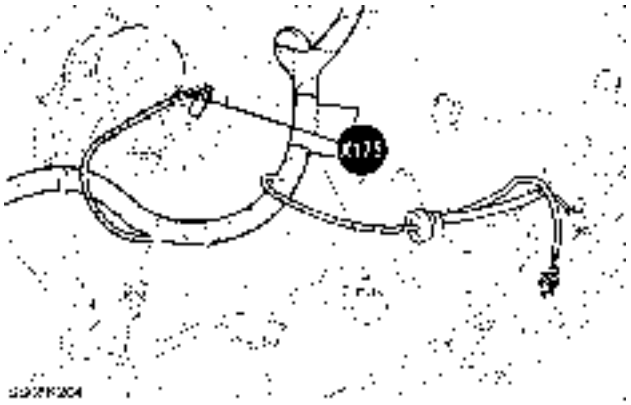

SS08K204 7

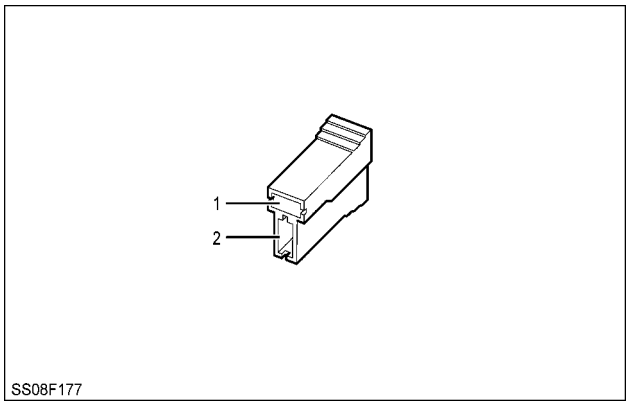

SS08F177 8

REAR RIGHT HAND CAB ROOF

X176 LICENCE PLATE RIGHT HAND

POS.	WIRE NUMBER	CIRCUIT REFERENCE
1	1014A (R)	LEFT HAND LAMPS
2	998A (W)	WORK LAMP-REAR FEED (INNER)

NOTE: For the wiring color code refer to, **Wiring harness - Overview (A.30.A)**.

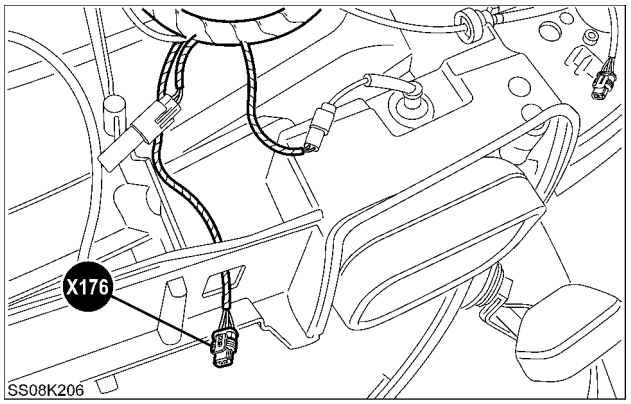

SS08K206 9

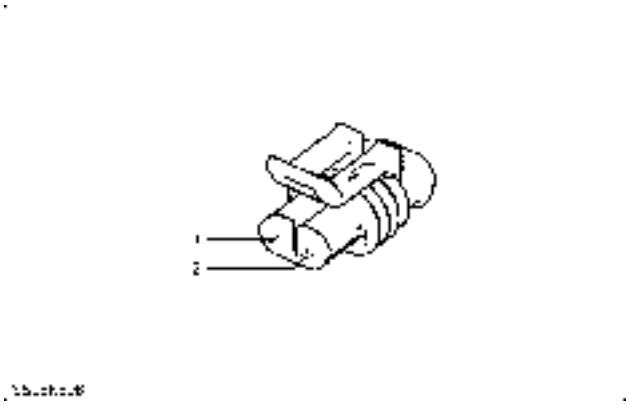

SS08K508 10

REAR RIGHT HAND CAB ROOF

https://tractormanualz.com/

X177 WIPER MOTOR REAR

POS.	WIRE NUMBER	CIRCUIT REFERENCE
1	1120 (G)	RR WINDSHIELD WIPER PARK RETURN
2	57D (B)	EARTH (ALL)
3	1038 (TN)	WINDSHIELD WIPER FEED-REAR

NOTE: *For the wiring color code refer to,* ***Wiring harness - Overview (A.30.A)****.*

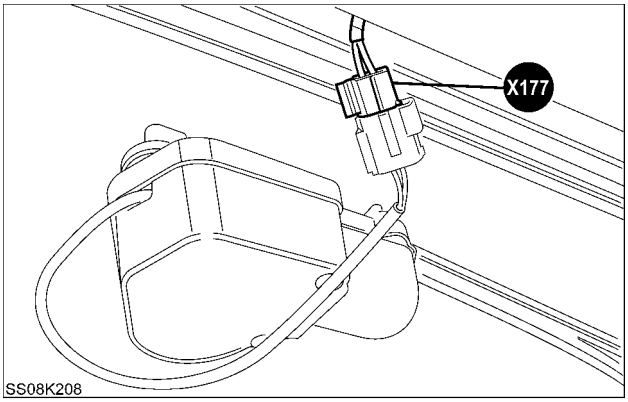

SS08K208 11

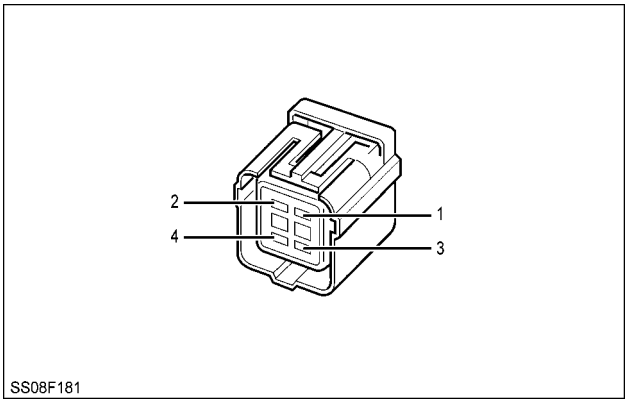

SS08F181 12

REAR CAB ROOF

https://tractormanualz.com/

Connector - Component diagram 18

X180 LICENCE PLATE LEFT HAND

POS.	WIRE NUMBER	CIRCUIT REFERENCE
1	1014B (R)	LEFT HAND LAMPS
2	978B (W)	LICENCE PLATE LAMP

NOTE: For the wiring color code refer to, **Wiring harness - Overview (A.30.A)**.

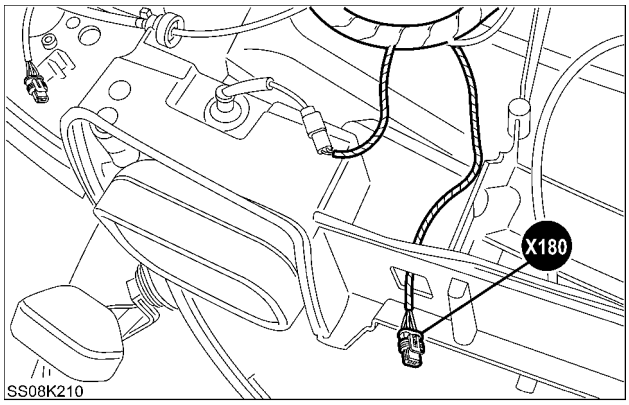

SS08K210 1

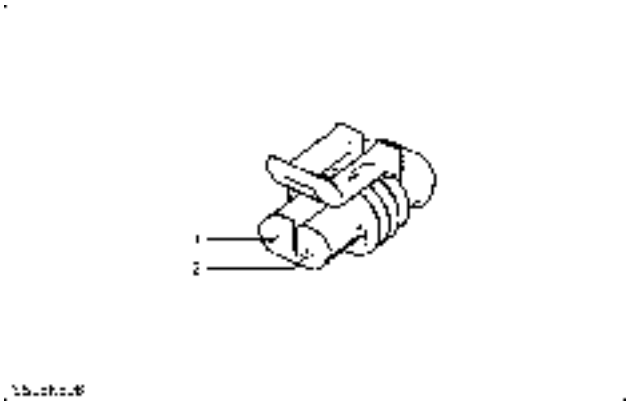

SS08K508 2

REAR LEFT HAND CAB ROOF

X181 RADIO SPEAKER LEFT HAND REAR

POS.	WIRE NUMBER	CIRCUIT REFERENCE
1	3097 (G)	SPEAKER RR-LHS +
2	3098 (G)	SPEAKER RR-LHS -

NOTE: *For the wiring color code refer to,* ***Wiring harness - Overview (A.30.A)****.*

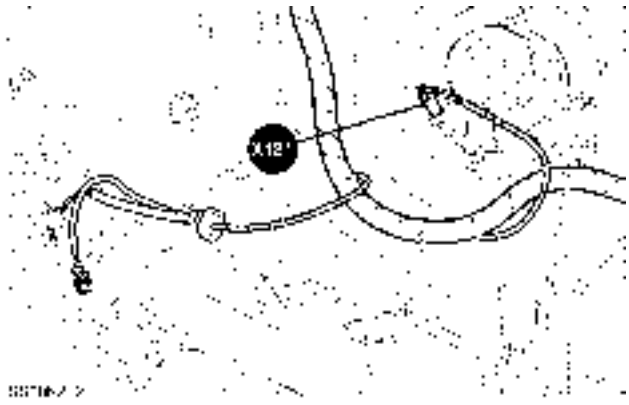

SS08K212 3

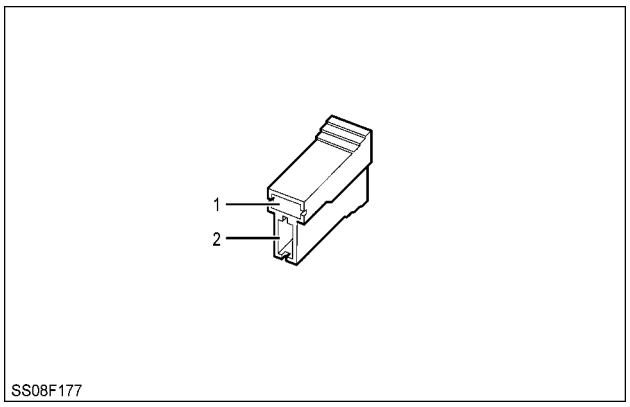

SS08F177 4

REAR LEFT HAND CAB ROOF

https://tractormanualz.com/

X182 WORKLAMP LEFT HAND REAR

POS.	WIRE NUMBER	CIRCUIT REFERENCE
2	997A (G)	WORK LAMP-REAR FEED (OUTER)
4	57P (B)	EARTH (ALL)

NOTE: *For the wiring color code refer to,* ***Wiring harness - Overview (A.30.A)****.*

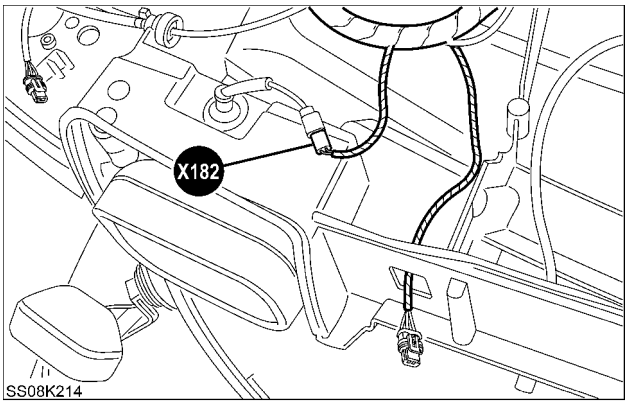

SS08K214 5

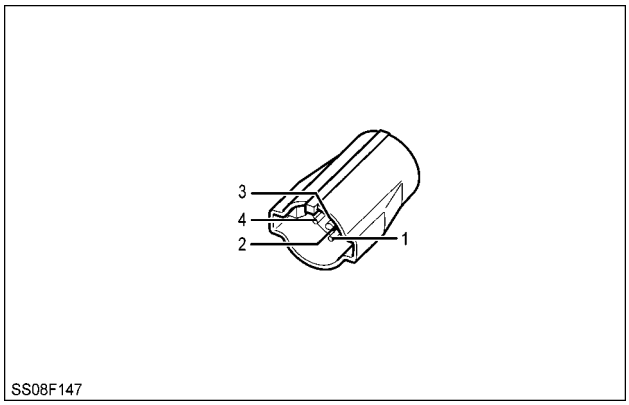

SS08F147 6

REAR LEFT HAND CAB ROOF

https://tractormanualz.com/

X185 ROTATING BEACON LEFT HAND

POS.	WIRE NUMBER	CIRCUIT REFERENCE
1	4012A (L)	ROTATING BEACON FEED
2	57Z (B)	EARTH (ALL)

NOTE: *For the wiring color code refer to,* ***Wiring harness - Overview (A.30.A)****.*

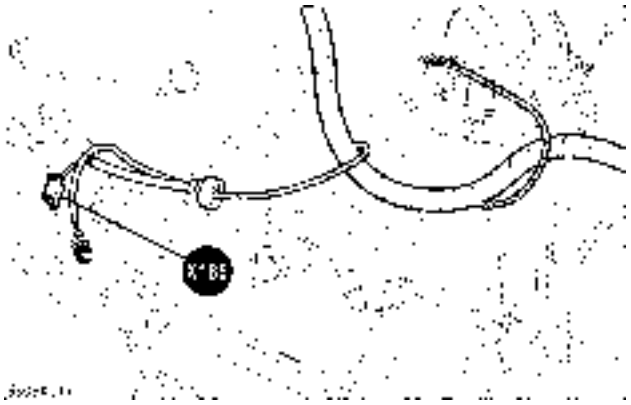

SS08K217 7

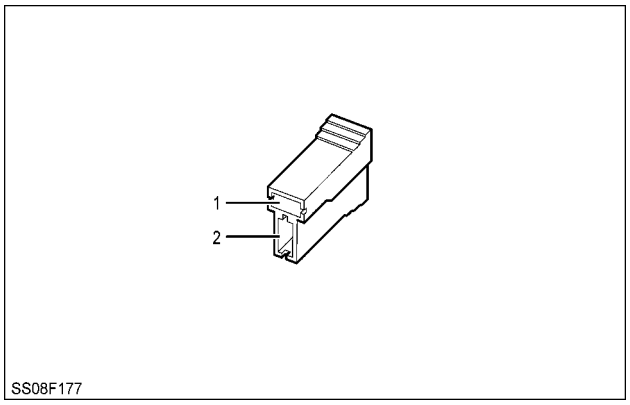

SS08F177 8

REAR LEFT HAND CAB ROOF

https://tractormanualz.com/

X186 DOOR SWITCH LEFT HAND

POS.	WIRE NUMBER	CIRCUIT REFERENCE
1	3052B (L)	DOME LAMP TO DOOR SWITCH

NOTE: *For the wiring color code refer to,* ***Wiring harness - Overview (A.30.A)****.*

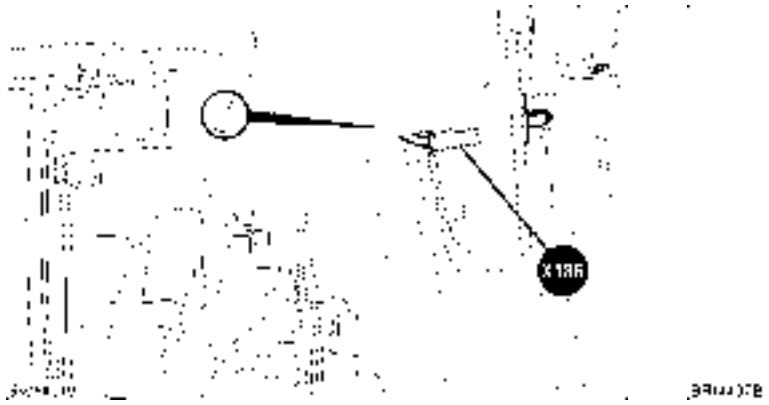

SS08K219 9

BRI4437B 10

TOP REAR LEFT HAND CAB DOOR

https://tractormanualz.com/

Connector - Component diagram 19

X190 INTERIOR LAMP A

POS.	WIRE NUMBER	CIRCUIT REFERENCE
1	3057,3057A (P)	PUDDLE LAMP RETURN

NOTE: *For the wiring color code refer to,* ***Wiring harness - Overview (A.30.A)****.*

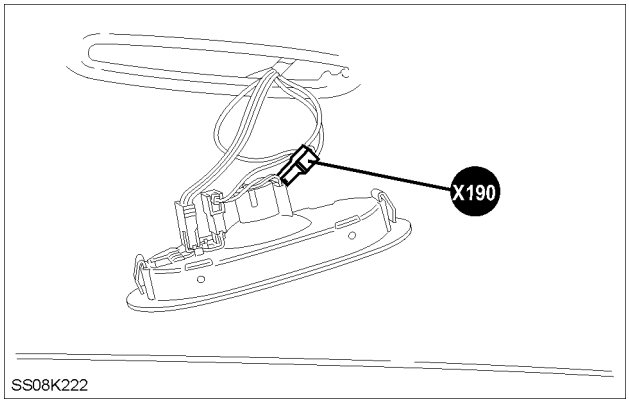

SS08K222 1

BRI4437B 2

CAB ROOF

X191 INTERIOR LAMP B1

POS.	WIRE NUMBER	CIRCUIT REFERENCE
1	666A (L)	DOMELAMP SWITCH FEED

NOTE: *For the wiring color code refer to,* ***Wiring harness - Overview (A.30.A)****.*

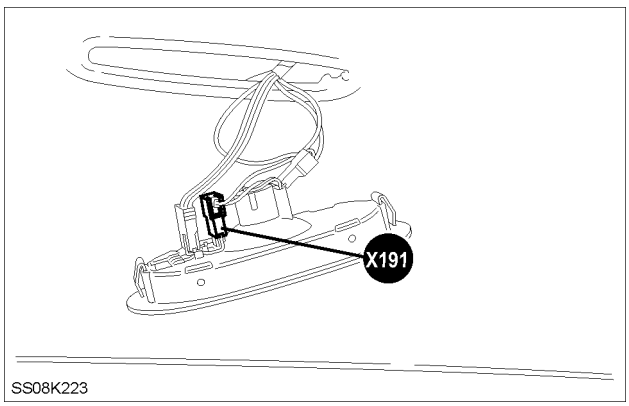

SS08K223 3

BRI4460C 4

CAB ROOF

https://tractormanualz.com/

X192 INTERIOR LAMP B2

POS.	WIRE NUMBER	CIRCUIT REFERENCE
1	3052A,3052B (L)	DOME LAMP TO DOOR SWITCH
2	57R (B)	EARTH (ALL)

NOTE: *For the wiring color code refer to,* ***Wiring harness - Overview (A.30.A)****.*

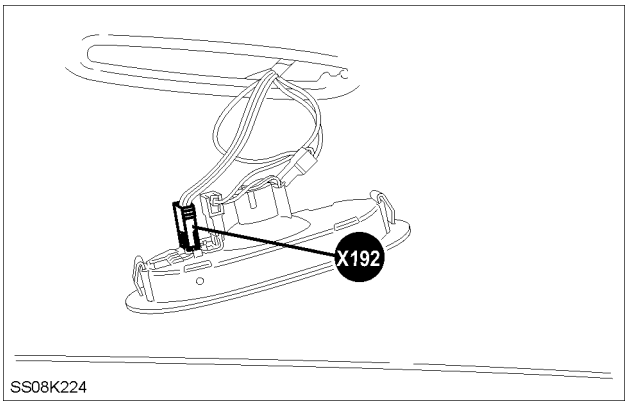

SS08K224 5

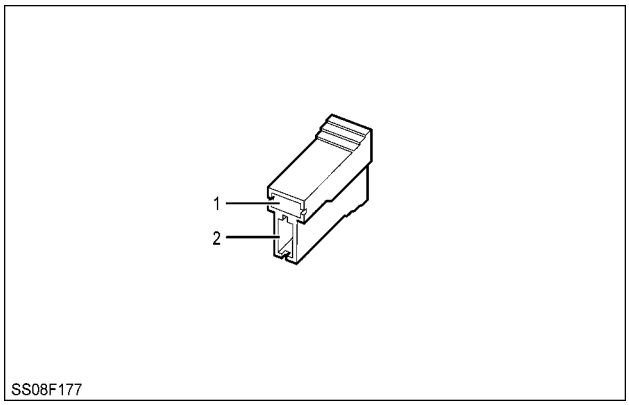

SS08F177 6

CAB ROOF

X193 PUDDLE LAMP LEFT HAND

POS.	WIRE NUMBER	CIRCUIT REFERENCE
1	3057A (L)	PUDDLE LAMP RETURN
2	666C (L)	DOMELAMP SWITCH FEED

NOTE: *For the wiring color code refer to,* ***Wiring harness - Overview (A.30.A)****.*

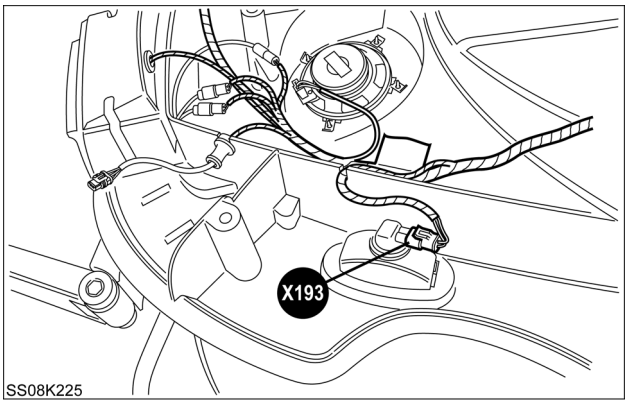

SS08K225 7

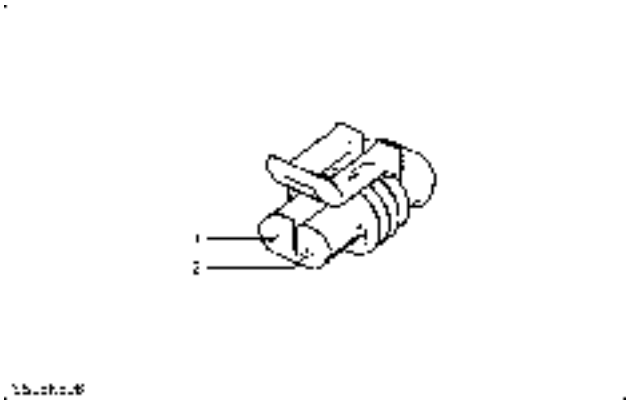

SS08K508 8

FRONT LEFT HAND CAB ROOF

https://tractormanualz.com/

X195 SIDE LAMP GRABRAIL LEFT HAND

POS.	WIRE NUMBER	CIRCUIT REFERENCE
1	250 (LTG)	SMV LAMPS LH
2	1014C (R)	LEFT HAND LAMPS
4	57E (B)	EARTH (ALL)

NOTE: *For the wiring color code refer to,* ***Wiring harness - Overview (A.30.A)****.*

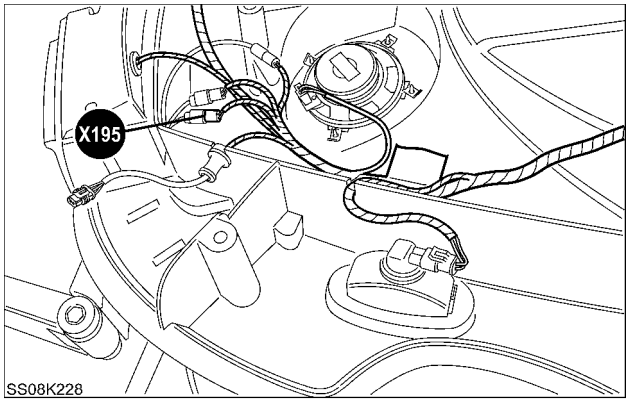

SS08K228 9

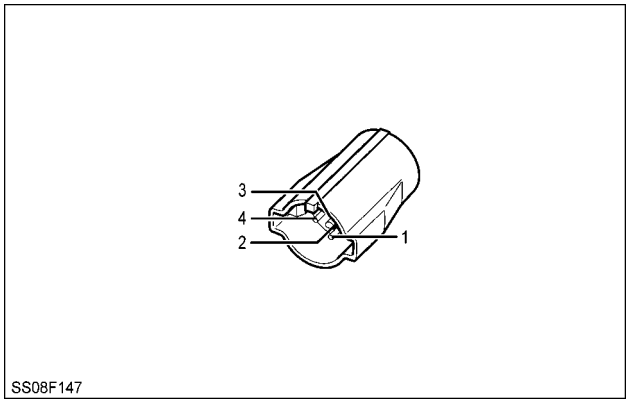

SS08F147 10

FRONT LEFT HAND CAB ROOF

X196 WORKLAMP GRABRAIL LEFT HAND

POS.	WIRE NUMBER	CIRCUIT REFERENCE
2	1097A (R)	FEED FRONT WORKLAMP OUTER
4	57V (B)	EARTH (ALL)

NOTE: *For the wiring color code refer to,* ***Wiring harness - Overview (A.30.A)****.*

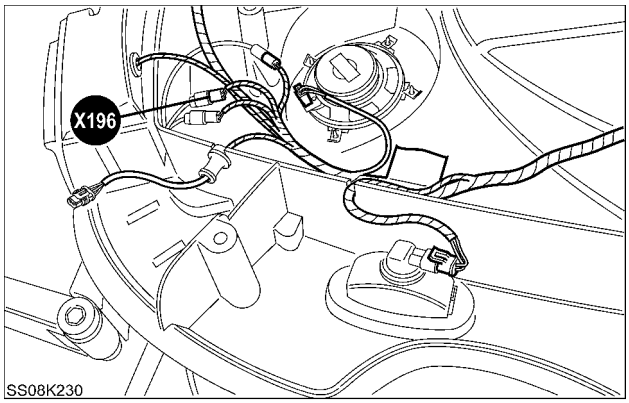

SS08K230 11

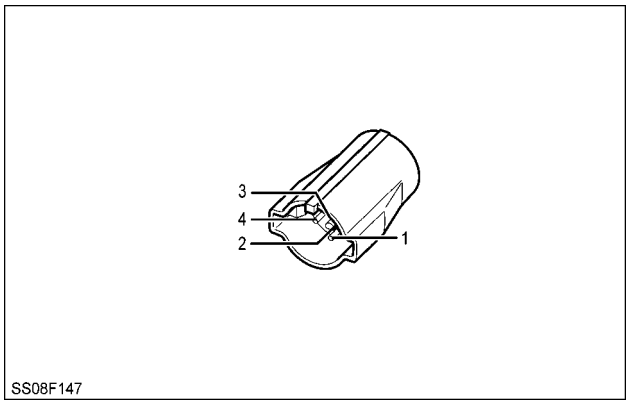

SS08F147 12

FRONT LEFT HAND CAB ROOF

https://tractormanualz.com/

X197 WORKLAMP LEFT HAND FRONT UPPER

POS.	WIRE NUMBER	CIRCUIT REFERENCE
A	1098A (W)	FRONT WORKLAMP RELAY GROUND
B	57AB (B)	EARTH (ALL)

NOTE: *For the wiring color code refer to,* ***Wiring harness - Overview (A.30.A)****.*

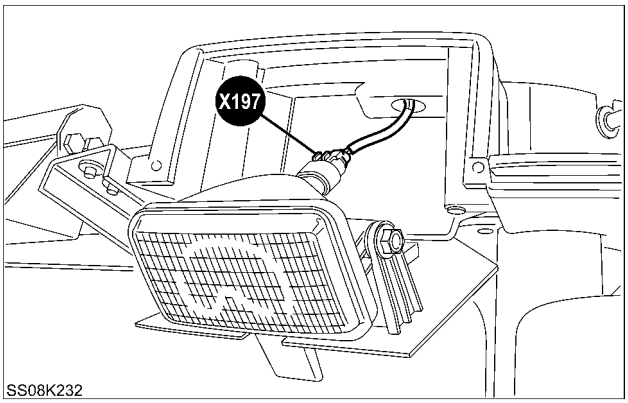

SS08K232 13

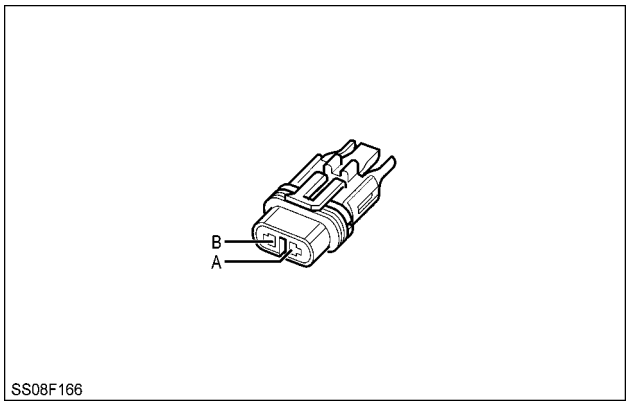

SS08F166 14

FRONT LEFT HAND CAB ROOF

https://tractormanualz.com/

Connector - Component diagram 20

X201 WIPER MOTOR FRONT (CABINE)

POS.	WIRE NUMBER	CIRCUIT REFERENCE
1	28 (Y)	WIPER MOTOR (PARK RETURN)
2	57M (B)	EARTH (ALL)
3	58 (R)	WIPER MOTOR-LOW
4	1019 (G)	WINDSHIELD WIPER FEED
6	56 (W)	WIPER MOTOR-HIGH

NOTE: *For the wiring color code refer to,* ***Wiring harness - Overview (A.30.A)****.*

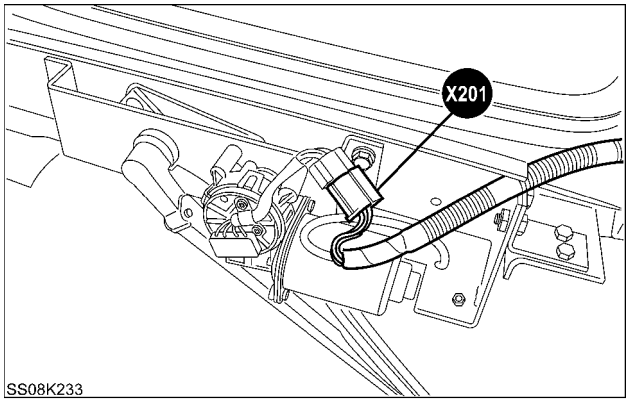

SS08K233 1

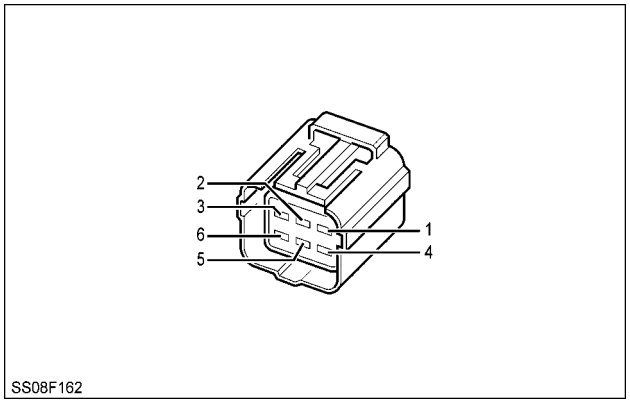

SS08F162 2

FRONT CAB ROOF

X207 ANTENNE PLUS

POS.	WIRE NUMBER	CIRCUIT REFERENCE
1	3079B (R)	RADIO +12V IGNITION

NOTE: *For the wiring color code refer to,* ***Wiring harness - Overview (A.30.A)****.*

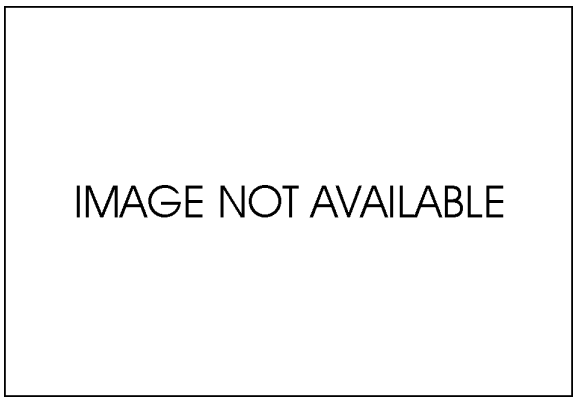

INA 3

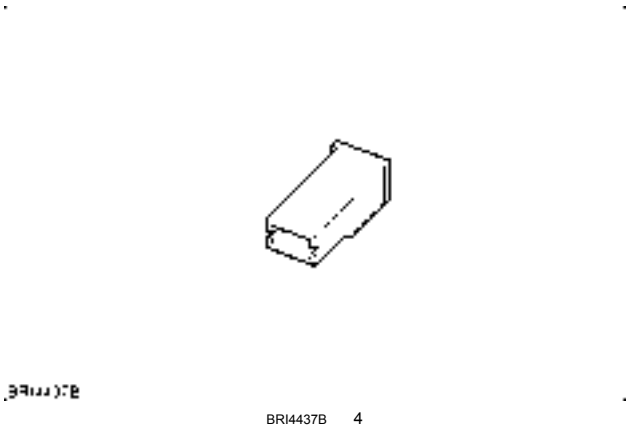

BRI4437B 4

CAB ROOF

https://tractormanualz.com/

Connector - Component diagram 21

X211 LOADER VALVE OPTION A

POS.	WIRE NUMBER	CIRCUIT REFERENCE
1	3272 (O)	LOADER VALVE #1 OUT
2	3273 (O)	LOADER VALVE #1 RETURN

NOTE: *For the wiring color code refer to,* ***Wiring harness - Overview (A.30.A)****.*

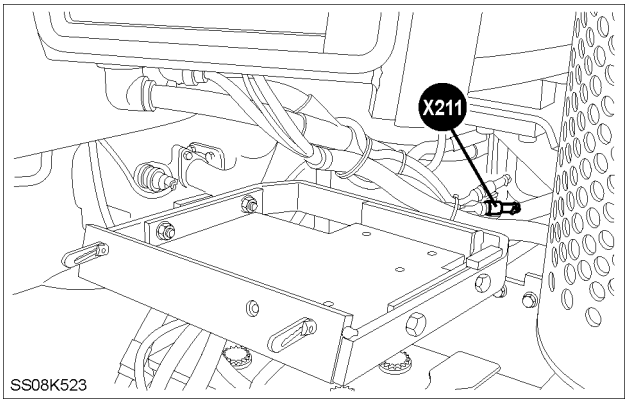

SS08K523 1

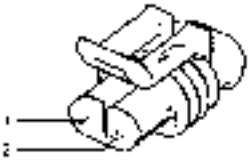

SS08K508 2

RIGHT HAND BEHIND STEPS

X212 LOADER VALVE OPTION B

POS.	WIRE NUMBER	CIRCUIT REFERENCE
1	3274 (R)	LOADER VALVE #2 OUT
2	3275 (R)	LOADER VALVE #2 RETURN

NOTE: *For the wiring color code refer to,* ***Wiring harness - Overview (A.30.A)****.*

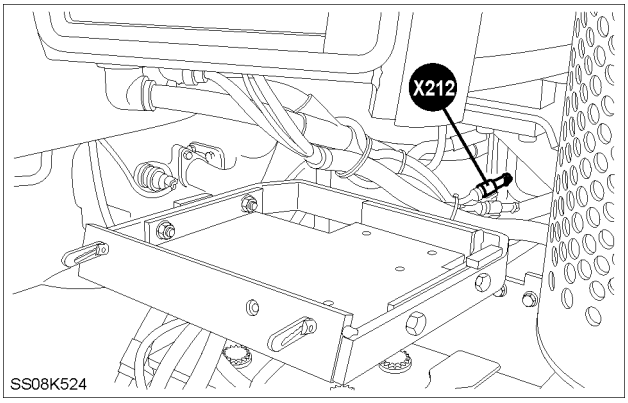

SS08K524 3

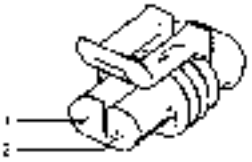

SS08K508 4

RIGHT HAND BEHIND STEPS

https://tractormanualz.com/

X213 ENGINE CONTROL UNIT - A

POS.	WIRE NUMBER	CIRCUIT REFERENCE
1	Y/B	
2	U/B	
3	W/G	
8	W/B	
9	N/B	
11	G	
12	W	
13	O/U	
16	S/Y	
17	S/B	
18	N/B	
19	G	
20	W	
21	B	
22	Y/G	
23	Y/B	
27	R	
28	S/B	
31	O/W	
32	O/U	
33	B/P	
36	K/N	
40	U/B	
41	W/Y	
43	R/G	
46	U/R	
47	N/W	
48	S/R	
49	O	
50	R	
51	O/B	
52	W/U	
53	W/R	
54	Y/R	
58	O/G	

NOTE: *For the wiring color code refer to,* ***Wiring harness - Overview (A.30.A)****.*

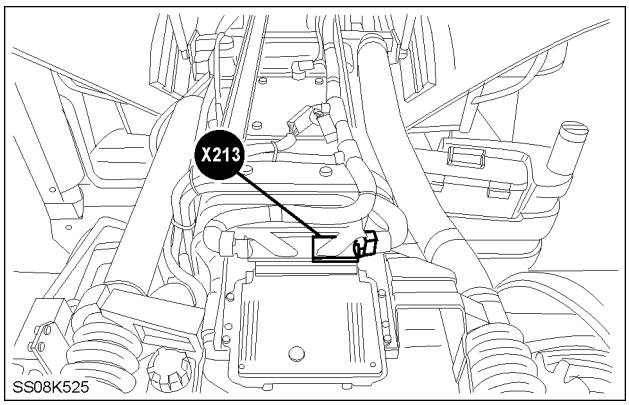

SS08K525 5

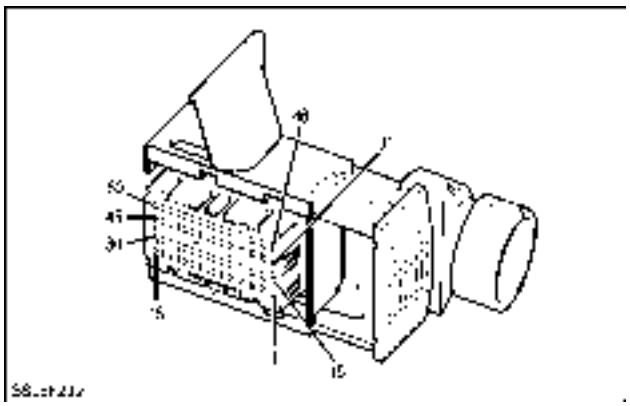

SS08F239 6

TOP ENGINE

https://tractormanualz.com/

X214 EARTH POINT - ELECTRONIC MODULE

POS.	WIRE NUMBER	CIRCUIT REFERENCE
1	57FG (B)	EARTH (ALL)

NOTE: *For the wiring color code refer to,* ***Wiring harness - Overview (A.30.A)****.*

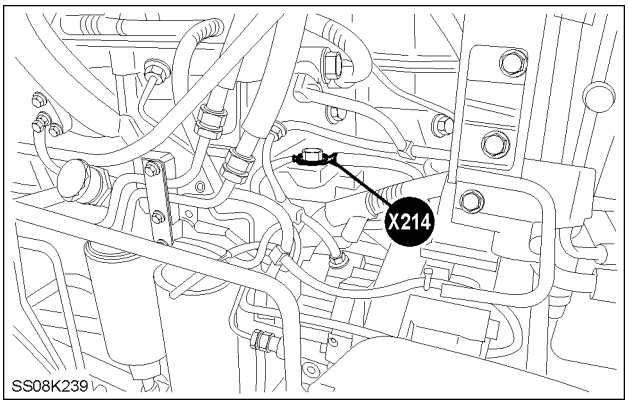

SS08K239 7

BRI4404B 8

LEFT HAND ENGINE

X215 GRID HEATER RELAY

POS.	WIRE NUMBER	CIRCUIT REFERENCE
1	6586 (L)	ECU TO GRID HEATER RELAY RETURN
2	6408H (G)	FUSED B+ TO ECU (1)

NOTE: *For the wiring color code refer to,* ***Wiring harness - Overview (A.30.A)****.*

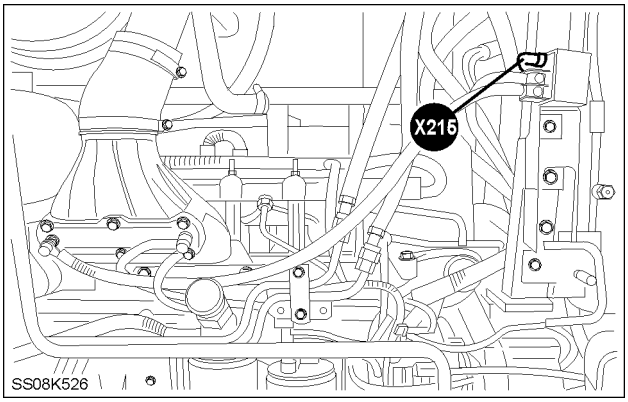

SS08K526 9

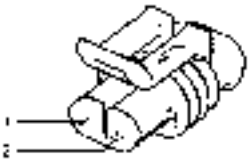

SS08K508 10

LEFT HAND ENGINE

https://tractormanualz.com/

X216 FUEL HEATER RELAY

POS.	WIRE NUMBER	CIRCUIT REFERENCE
1	6570 (G)	ECU TO FUEL FILTER HEATER RETURN
2	6408J (G)	FUSED B+ TO ECU (1)

NOTE: *For the wiring color code refer to,* ***Wiring harness - Overview (A.30.A)****.*

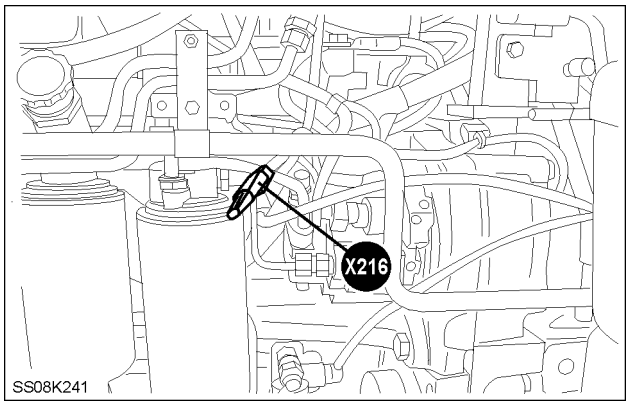

SS08K241 11

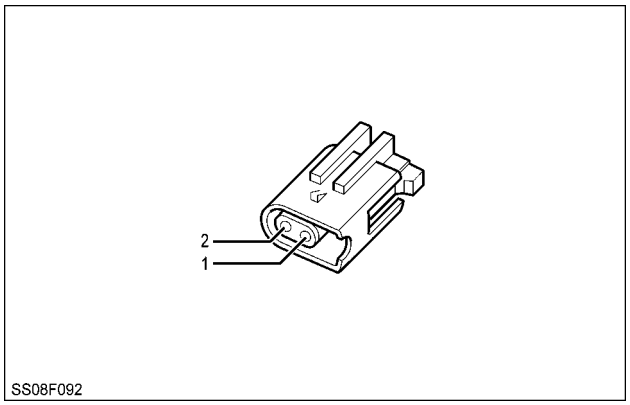

SS08F092 12

LEFT HAND ENGINE

https://tractormanualz.com/

X218 ENGINE MODULE BOSCH EDC 16

POS.	WIRE NUMBER	CIRCUIT REFERENCE
1	6408P (G)	FUSED B+ TO ECU (1)
2	57FC (B)	EARTH (ALL)
4	57FE (B)	EARTH (ALL)
5	6408F (G)	FUSED B+ TO ECU (1)
6	57FD (B)	EARTH (ALL)
24	6320 (N)	FAN 5V REF.
25	6418 (K)	ECU TO J1941(ISO) INTERFACE #2 CONNECTOR ISO K
28	71C (W)	IGNITION SWITCHED FEEDS (UNFUSED)
29	2087 (O)	EXHAUST BRAKE SOLENOID
53	6305 (O)	REVERSIBLE FAN OPTION - MOTOR FEED
61	5420D (G)	CAN L
62	5400D (Y)	CAN H
68	6570 (G)	ECU TO FUEL FILTER HEATER RETURN
72	6407 (O)	ENGINE SHUTDOWN
75	6300 (N)	FAN SPEED
79	2040 (LTG)	WATER IN FUEL SENSOR
90	6310 (N)	FAN SOLENOID
93	6586 (L)	ECU TO GRID HEATER RELAY RETURN

NOTE: *For the wiring color code refer to,* ***Wiring harness - Overview (A.30.A)****.*

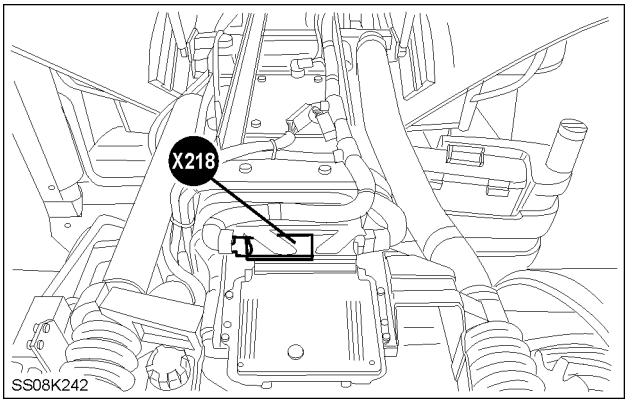

SS08K242 13

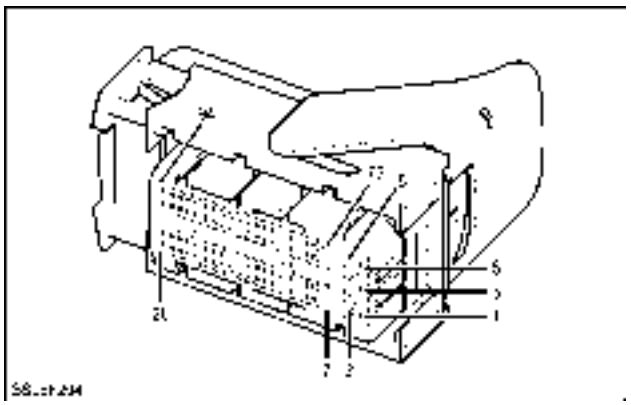

SS08F204 14

TOP ENGINE

https://tractormanualz.com/

X219 VISCTRONIC FAN

POS.	WIRE NUMBER	CIRCUIT REFERENCE
1	6300 (N)	FAN SPEED
2	6305 (O)	REVERSIBLE FAN OPTION - MOTOR FEED
3	6408G (G)	FUSED B+ TO ECU (1)
4	6310 (N)	FAN SOLENOID
5	6320 (N)	FAN 5V REF.

NOTE: *For the wiring color code refer to,* ***Wiring harness - Overview (A.30.A)****.*

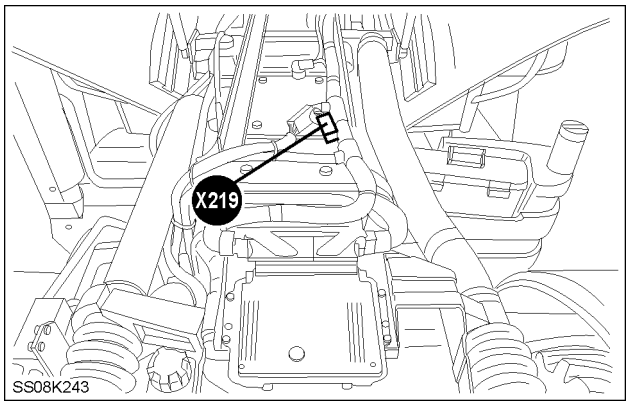

SS08K243 15

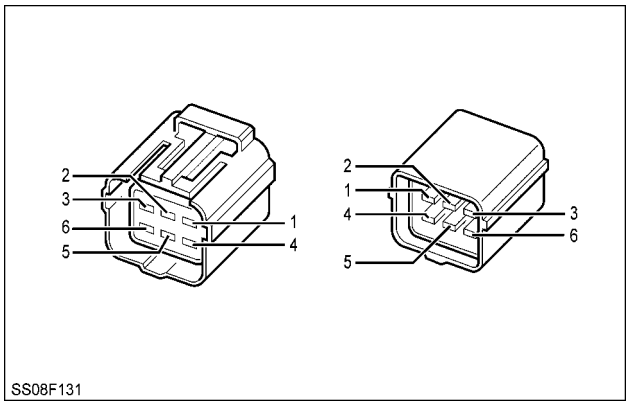

SS08F131 16

TOP ENGINE

https://tractormanualz.com/

Connector - Component diagram 22

X220 FRONT LAMPS

POS.	WIRE NUMBER	CIRCUIT REFERENCE
1	57JF (B) / 57AB (B)	EARTH (ALL)
2	376 (L)	HORN FEED
3	1030B (U)	HEADLAMP DIP BEAM
4	1027B (U)	HEADLAMP MAIN BEAM
5	1073A (L) / 1073 (L)	WORKLAMP FRONT FEED
6	57JG (B) / 57B (B)	EARTH (ALL)
7	1030A (U) / 1030 (U)	HEADLAMP DIP BEAM
8	1027A (U) / 1027 (U)	HEADLAMP MAIN BEAM

NOTE: *For the wiring color code refer to,* ***Wiring harness - Overview (A.30.A)****.*

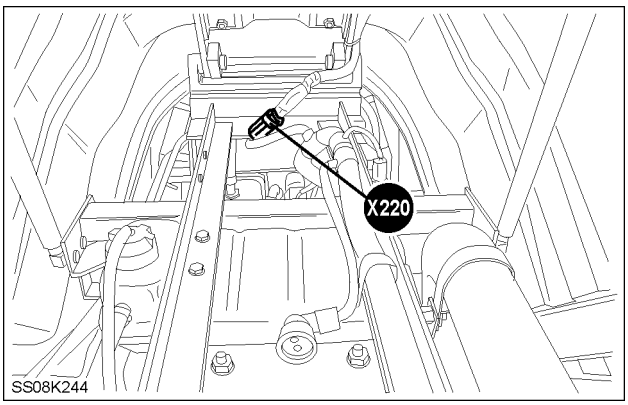

SS08K244 1

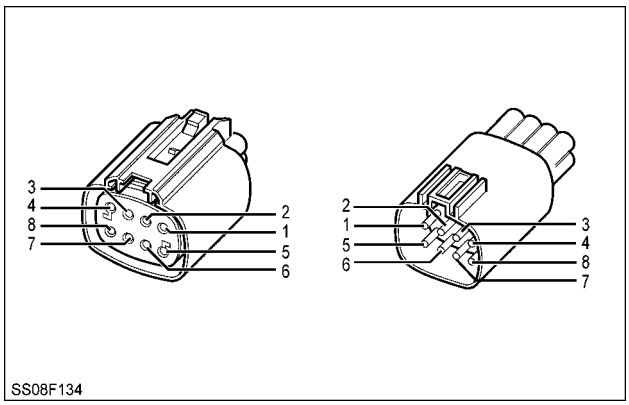

SS08F134 2

TOP LEFT HAND ENGINE

X221 BRAKE FLUID LEVEL

POS.	WIRE NUMBER	CIRCUIT REFERENCE
1	3016 (S)	BRAKE FLUID LEVEL SIGNAL
1	10M (G)	IGNITION SUPPLY

NOTE: *For the wiring color code refer to,* ***Wiring harness - Overview (A.30.A)****.*

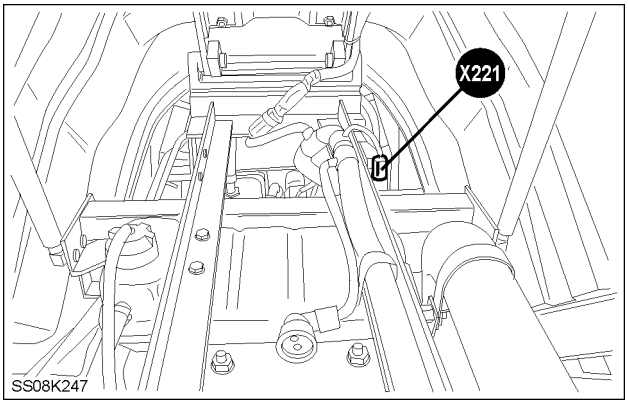

SS08K247 3

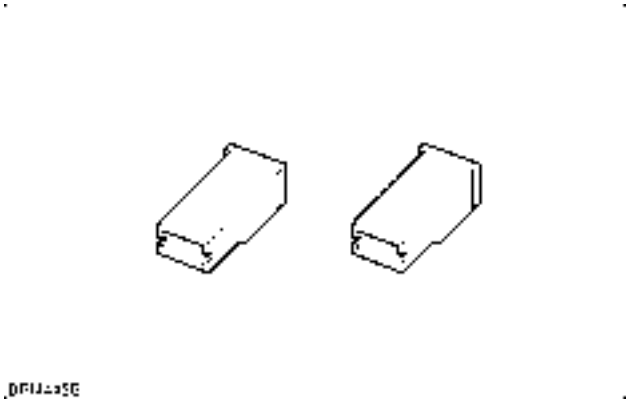

BRI4445B 4

TOP LEFT HAND ENGINE

https://tractormanualz.com/

X223 AIR CLEANER SWITCH

POS.	WIRE NUMBER	CIRCUIT REFERENCE
1	57JB (B)	EARTH (ALL)
1	1005 (S)	AIR CLEANER WARNING LAMP

NOTE: *For the wiring color code refer to,* ***Wiring harness - Overview (A.30.A)****.*

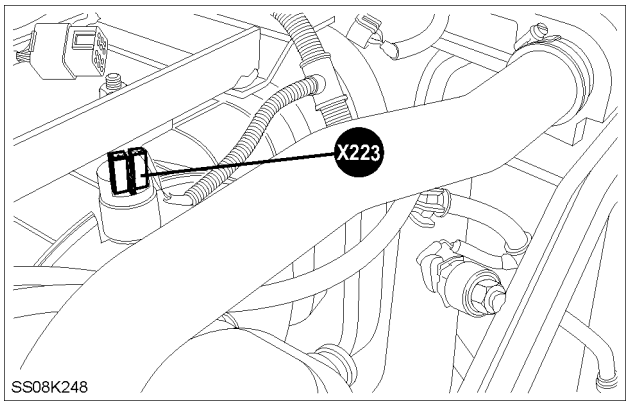

SS08K248 5

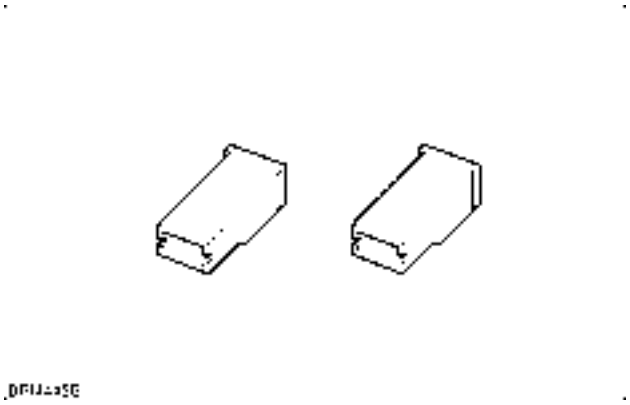

BRI4445B 6

TOP RIGHT HAND ENGINE

X225 A/C PRESSURE SWITCH

POS.	WIRE NUMBER	CIRCUIT REFERENCE
1	2006A (U)	DE-ICING SWITCH - AIR CONDITIONER
2	2006B (U)	DE-ICING SWITCH - AIR CONDITIONER
3	2007 (Y)	AIR CONDITIONER LOW PRESSURE
4	5200AA (N)	EDC VALVE SUPPLY

NOTE: *For the wiring color code refer to,* ***Wiring harness - Overview (A.30.A)****.*

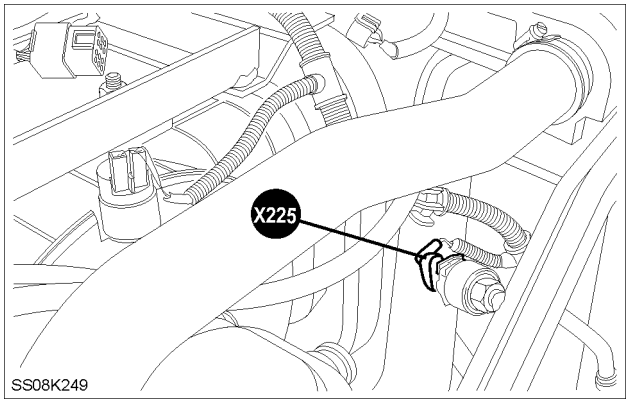

SS08K249 7

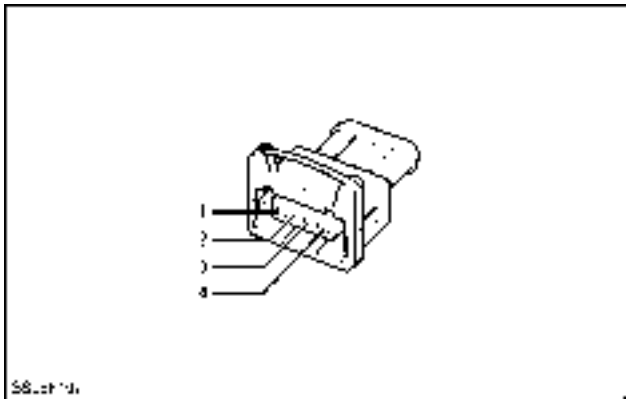

SS08F107 8

TOP RIGHT HAND ENGINE

https://tractormanualz.com/

X226 A/C CLUTCH

POS.	WIRE NUMBER	CIRCUIT REFERENCE
1	1018 (LTG)	AIR CONDITIONER CLUTCH
2	57JC (B)	EARTH (ALL)

NOTE: *For the wiring color code refer to,* ***Wiring harness - Overview (A.30.A)****.*

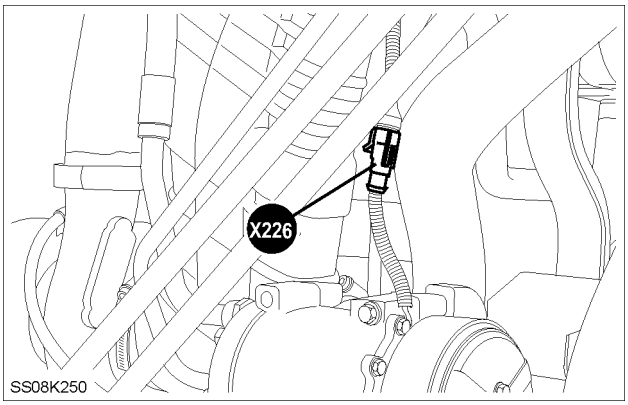

SS08K250 9

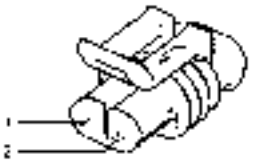

SS08K508 10

TOP RIGHT HAND ENGINE

https://tractormanualz.com/

X227 FRONT HITCH AND FRONT PTO

POS.	WIRE NUMBER	CIRCUIT REFERENCE
1	2044 (O)	PTO SOLENOID-FRONT RETURN(-)
2	2043 (O)	PTO SOLENOID-FRONT
3	2260 (O)	PTO FRONT - SPEED SIGNAL
4	60AB (B/W) / 60AE (B/W)	SENSOR GROUND
5	2570 (R)	FRONT HITCH RAISE SOLENOID
6	2530B (N)	FRONT HITCH V REF
7	2510 (N)	FRONT HITCH POSITION SIGNAL
8	57JT (B)	EARTH (ALL)
9	2250 (K)	PTO FRONT - SUPPLY
10	2556 (N) / 2556 (O)	FRONT HITCH SWITCH COMMON RAIL
11	2590 (TN)	EXTERNAL SWITCH FHPL UP
12	2591 (TN)	EXTERNAL SWITCH FHPL DOWN

NOTE: *For the wiring color code refer to,* ***Wiring harness - Overview (A.30.A)****.*

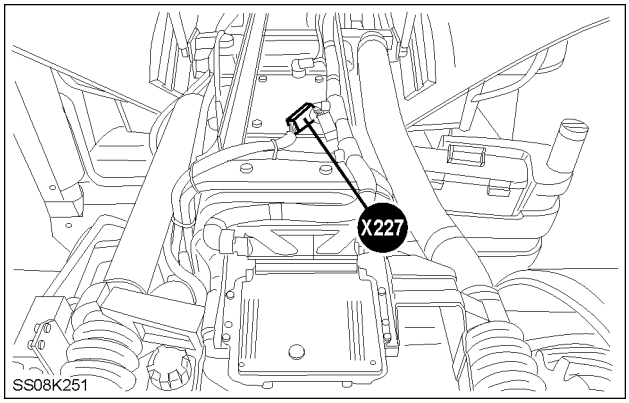

SS08K251 11

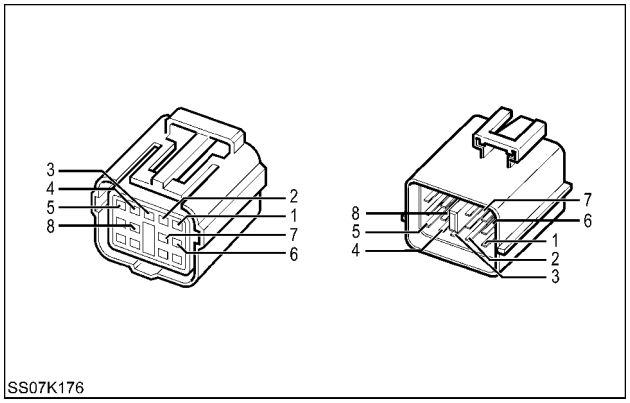

SS07K176 12

TOP OF ENGINE

https://tractormanualz.com/

Connector - Component diagram 23

X230 D.I.A. ENGINE INLINE

POS.	WIRE NUMBER	CIRCUIT REFERENCE
1	57HB (B)	EARTH (ALL)
2	1010 (G)	IGNITION RELAY (COIL)

NOTE: *For the wiring color code refer to,* ***Wiring harness - Overview (A.30.A)****.*

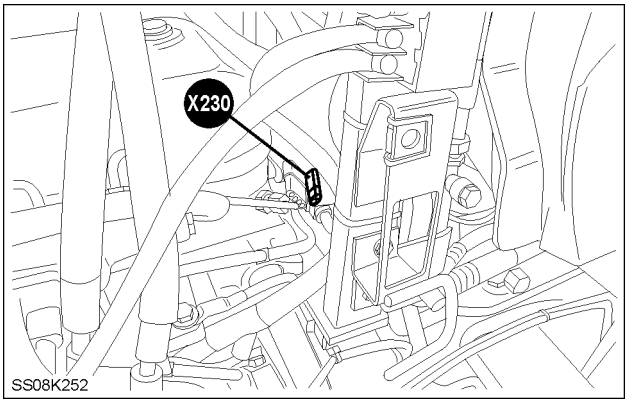

SS08K252 1

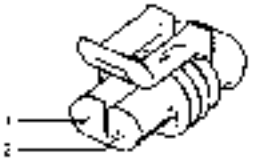

SS08K508 2

REAR LEFT HAND OF ENGINE

X231 STARTER SOLENOID B+

POS.	WIRE NUMBER	CIRCUIT REFERENCE
1	150 (R)	BATTERY FEED (UNFUSED)(ALL)

NOTE: *For the wiring color code refer to,* ***Wiring harness - Overview (A.30.A)****.*

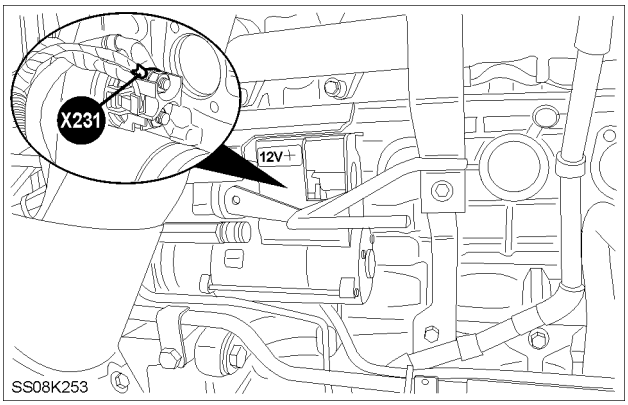

SS08K253 3

BRI4404B 4

REAR RIGHT HAND OF ENGINE

https://tractormanualz.com/

X232 STARTER SOLENOID 1

POS.	WIRE NUMBER	CIRCUIT REFERENCE
1	1001 (W)	STARTER SOLENOID FEED

NOTE: *For the wiring color code refer to,* ***Wiring harness - Overview (A.30.A)****.*

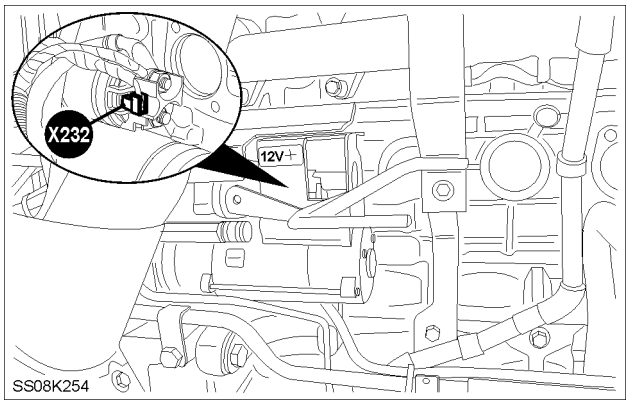

SS08K254 5

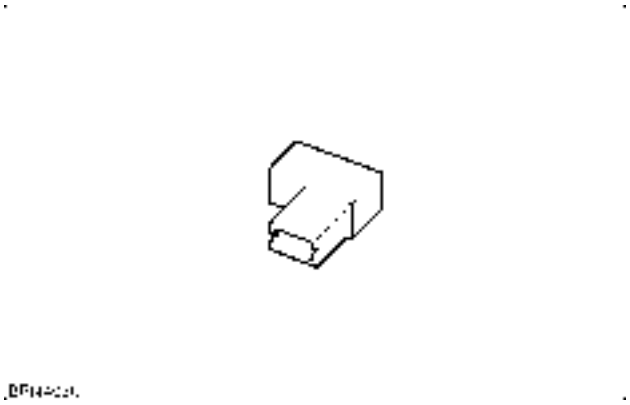

BRI4403C 6

REAR RIGHT HAND OF ENGINE

X233 RADAR GUN

POS.	WIRE NUMBER	CIRCUIT REFERENCE
1	2028B (G)	RADAR ASSEMBLY (GUN) SIGNAL
2	57JB (B)	EARTH (ALL)
3	2027 (R)	RADAR ASSEMBLY (GUN) POWER
4	2031 (Y)	RADAR PRESENT

NOTE: *For the wiring color code refer to,* ***Wiring harness - Overview (A.30.A)****.*

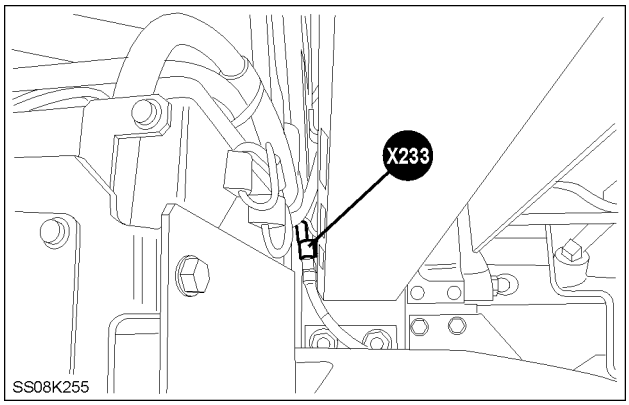

SS08K255 7

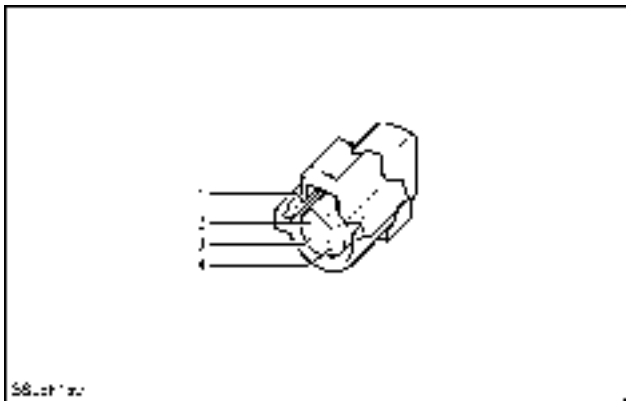

SS08F150 8

REAR RIGHT HAND ENGINE

https://tractormanualz.com/

X234 FRONT AXLE (SELF LEVEL)

POS.	WIRE NUMBER	CIRCUIT REFERENCE
1	3220B (LTG)	AXLE HEIGHT SENSOR 5V REF
2	3230 (U) / 3230 (O)	AXLE HEIGHT SENSOR POSITION
3	60AF (B/W)	SENSOR GROUND

NOTE: *For the wiring color code refer to,* ***Wiring harness - Overview (A.30.A)****.*

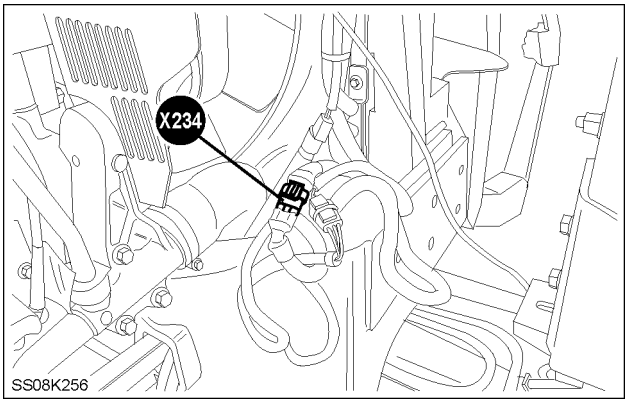

SS08K256 9

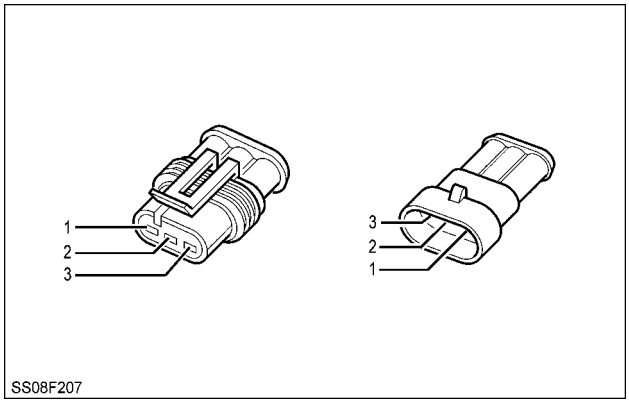

SS08F207 10

FRONT RIGHT HAND ENGINE

X235 STEERING ANGLE SENSOR

POS.	WIRE NUMBER	CIRCUIT REFERENCE
1	3120 (K)	STEERING SENSOR SIGNAL
2	2014 (G)	ENGINE OIL PRESSURE SENDER (+5 VOLT)
4	2095 (G)	INSTRUMENT SIGNAL GROUND

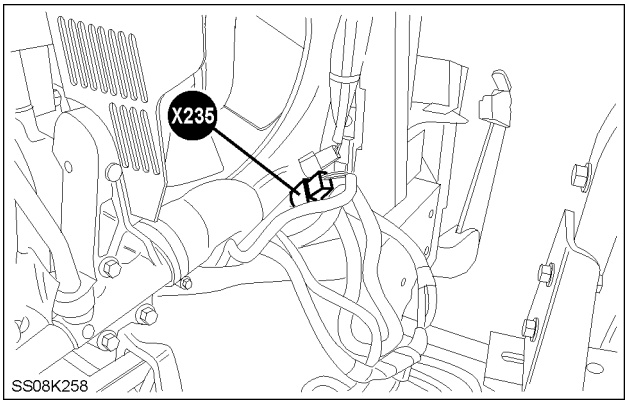

SS08K258 11

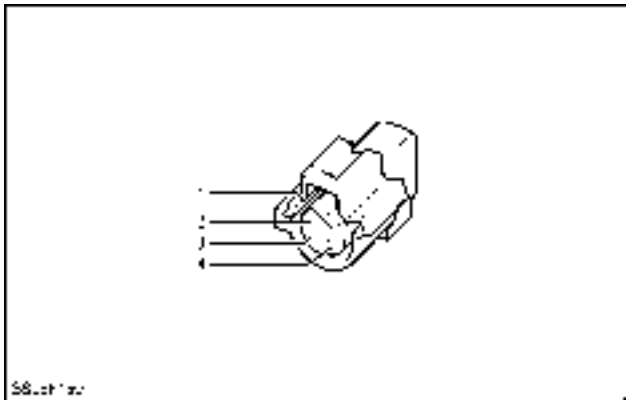

SS08F150 12

FRONT RIGHT HAND ENGINE

https://tractormanualz.com/

X235 STEERING ANGLE SENSOR (AUTO GUIDANCE)

POS.	WIRE NUMBER	CIRCUIT REFERENCE
1	3100 (G)	STEERING SENSOR +5v
2	3120 (K)	STEERING SENSOR SIGNAL
3	3140 (LTG)	STEERING SENSOR GROUND

NOTE: *For the wiring color code refer to,* ***Wiring harness - Overview (A.30.A)****.*

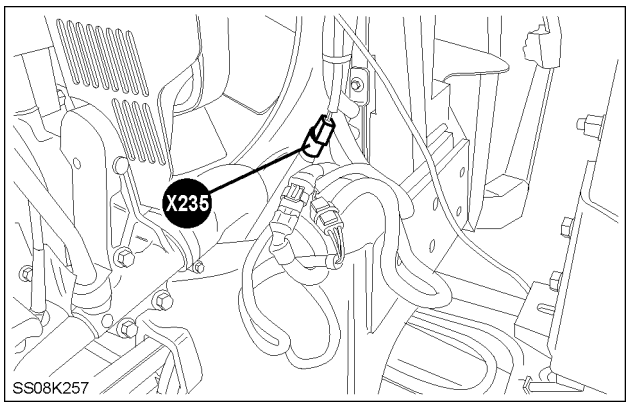

SS08K257 13

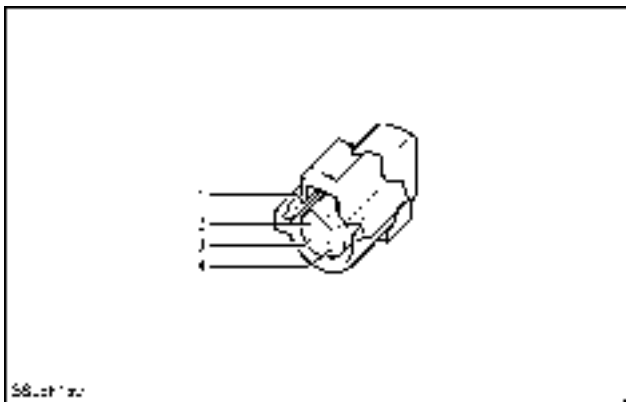

SS08F150 14

FRONT RIGHT HAND ENGINE

X236 ALTERNATOR B+

POS.	WIRE NUMBER	CIRCUIT REFERENCE
1	150 (R)	BATTERY FEED (UNFUSED)(ALL)

NOTE: *For the wiring color code refer to,* ***Wiring harness - Overview (A.30.A)****.*

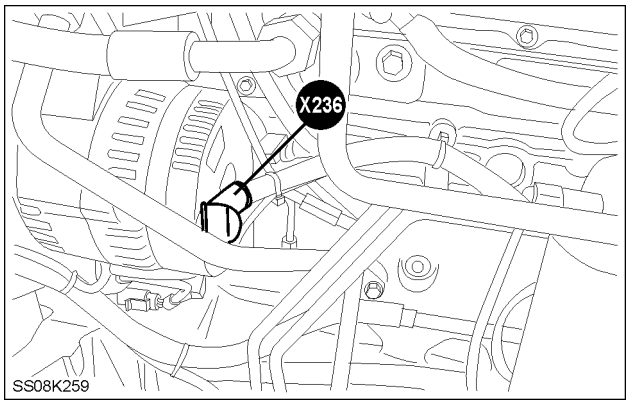

SS08K259 15

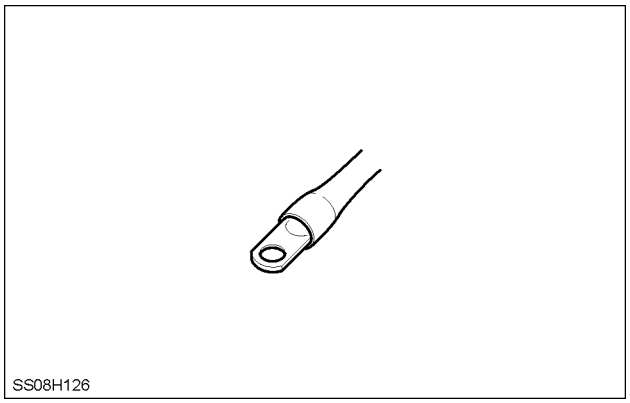

SS08H126 16

FRONT TOP LEFT HAND ENGINE

https://tractormanualz.com/

X237 ALTERNATOR D+

POS.	WIRE NUMBER	CIRCUIT REFERENCE
1	1006 (N)	ALTERNATOR WARNING LAMP

NOTE: *For the wiring color code refer to,* ***Wiring harness - Overview (A.30.A)****.*

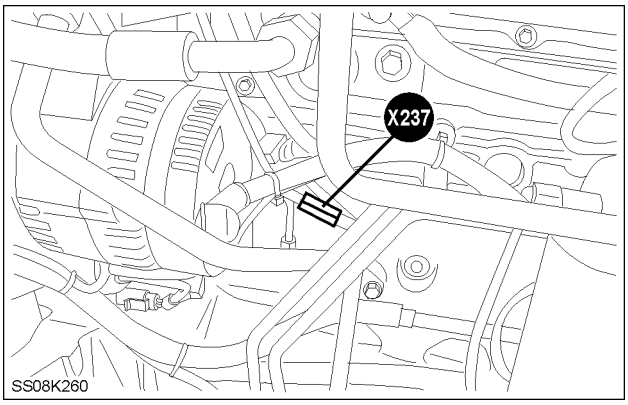

SS08K260 17

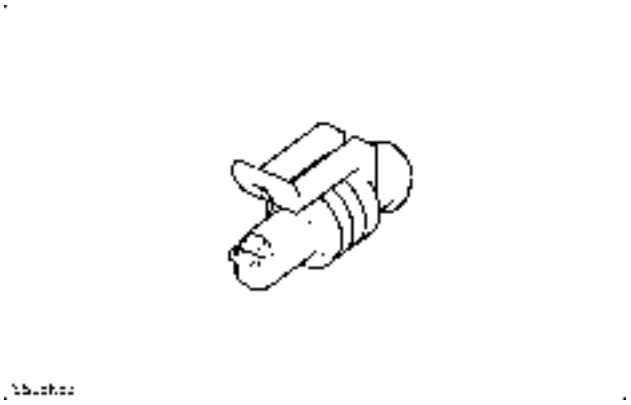

SS08K527 18

FRONT TOP LEFT HAND ENGINE

X238 BATTERY ISOLATOR

POS.	WIRE NUMBER	CIRCUIT REFERENCE
1	171B (W) / 171B (W/TQ/B)	BATTERY ISOLATOR RELAY COIL
2	57HA (B)	EARTH (ALL)
3	172A (W) / 172A (W/TQ/Y)	BATTERY ISOLATOR RELAY COIL (OFF)

NOTE: *For the wiring color code refer to,* ***Wiring harness - Overview (A.30.A)****.*

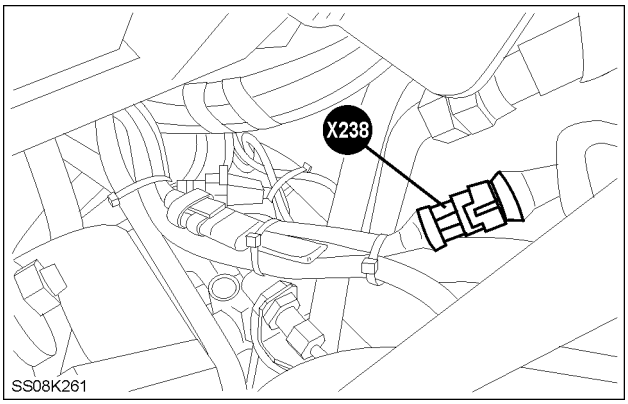

SS08K261 19

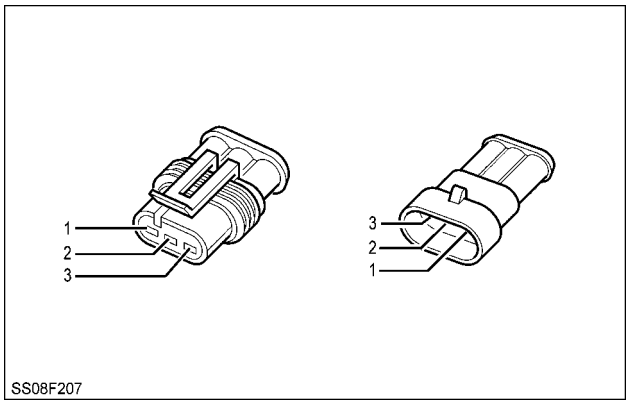

SS08F207 20

RIGHT HAND BEHIND STEPS

https://tractormanualz.com/

X239 REVERSIBLE FAN

POS.	WIRE NUMBER	CIRCUIT REFERENCE
1	6325 (N)	REVERSIBLE FAN OPTION - RELAY FEED
2	6315 (N) / 6315 (G)	REVERSIBLE FAN OPTION - RELAY CONTROL
3	57RJ (B) / 57RH (B)	EARTH (ALL)

NOTE: *For the wiring color code refer to,* ***Wiring harness - Overview (A.30.A)****.*

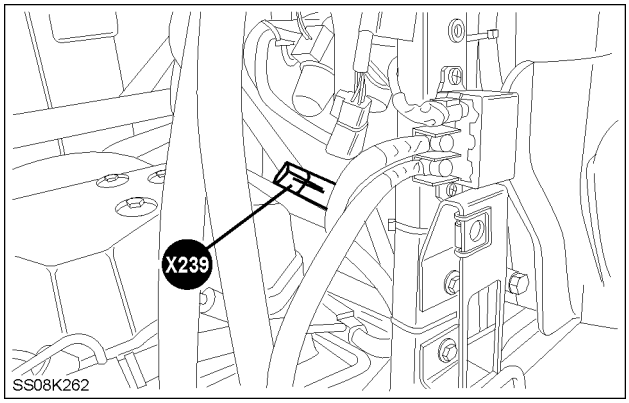

SS08K262 21

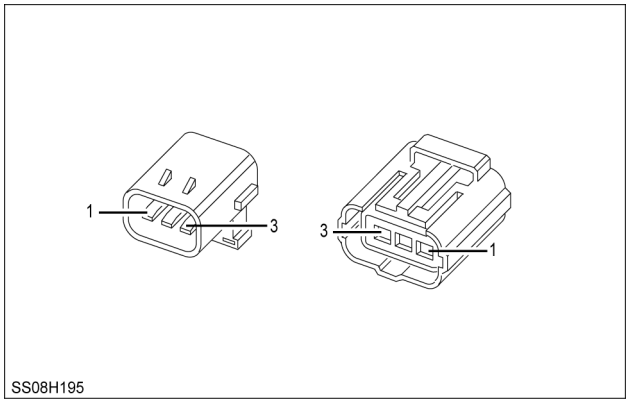

SS08H195 22

REAR LEFT HAND OF ENGINE

https://tractormanualz.com/

Connector - Component diagram 24

X242 WATER IN FUEL SENSOR

POS.	WIRE NUMBER	CIRCUIT REFERENCE
1	2040 (LTG)	WATER IN FUEL SENSOR
2	57JE (B)	EARTH (ALL)
3	10N (G)	IGNITION SUPPLY

NOTE: *For the wiring color code refer to,* ***Wiring harness - Overview (A.30.A)****.*

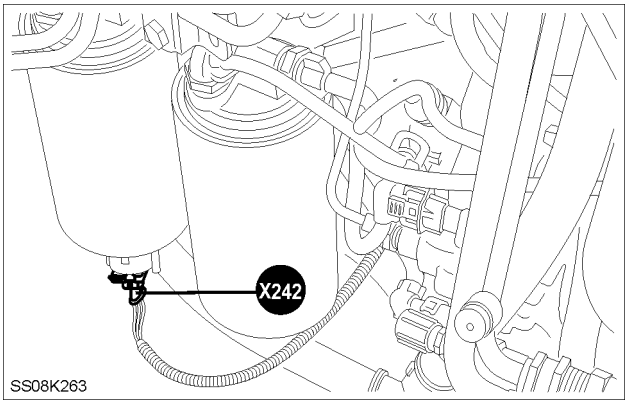

SS08K263 1

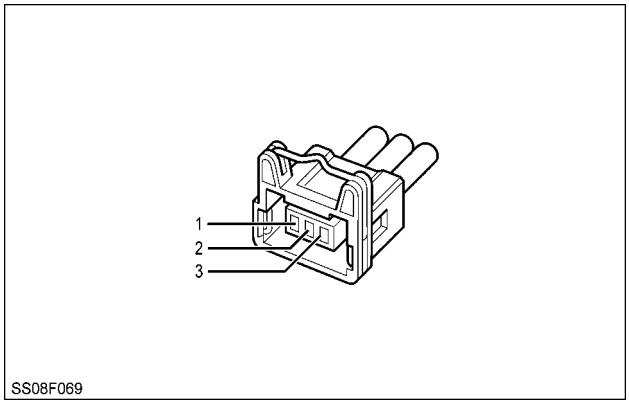

SS08F069 2

REAR LEFT HAND ENGINE

X248 SUSPENSION ACCELEROMETER

POS.	WIRE NUMBER	CIRCUIT REFERENCE
1	3235 (TN)	ACCELEROMETER SIGNAL
2	60AG (B/W)	SENSOR GROUND
3	3220C (LTG)	AXLE HEIGHT SENSOR 5V REF

NOTE: *For the wiring color code refer to,* ***Wiring harness - Overview (A.30.A)****.*

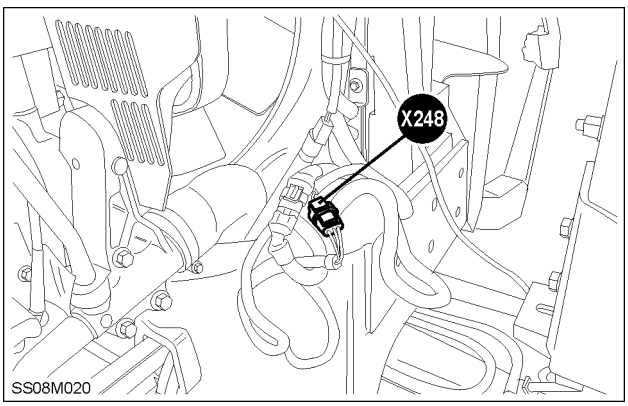

SS08M020 3

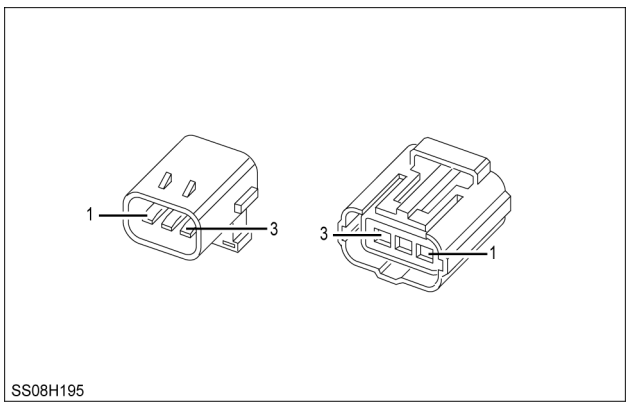

SS08H195 4

FRONT RIGHT HAND ENGINE

https://tractormanualz.com/

Connector - Component diagram 25

X251 PTO SPEED SENSOR

POS.	WIRE NUMBER	CIRCUIT REFERENCE
1	2050AV (G)	PTO SUPPLY / DOG SUPPLY
2	2140 (O)	PTO SPEED SENSOR
3	60AS (B/W)	SENSOR GROUND

NOTE: *For the wiring color code refer to,* ***Wiring harness - Overview (A.30.A)****.*

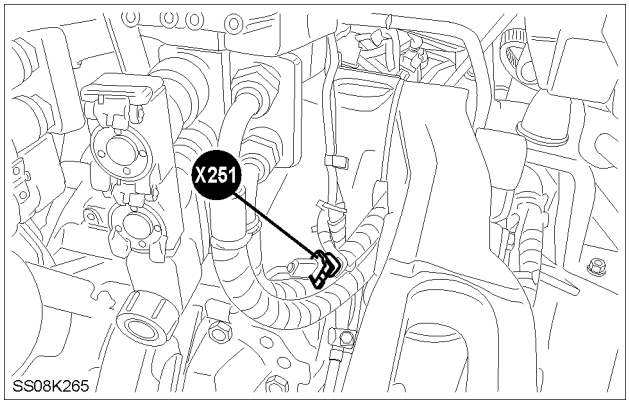

SS08K265 1

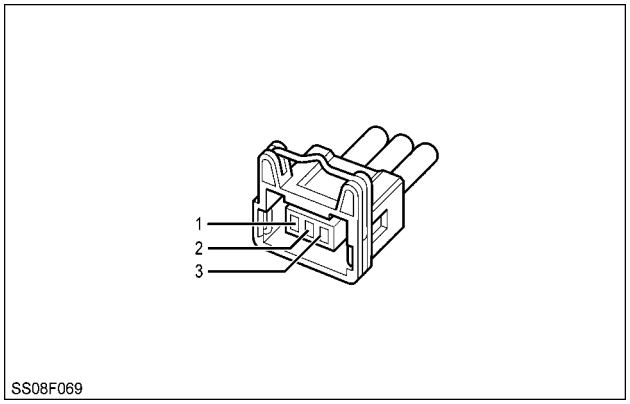

SS08F069 2

REAR RIGHT HAND TRANSMISSION

X253 TRAILER SOCKET

POS.	WIRE NUMBER	CIRCUIT REFERENCE
1	1013D (N)	RIGHT HAND LAMPS
1	810A (R)	STOPLAMPS
1	1014E (B)	LEFT HAND LAMPS
1	349 (G)	TRAILER TURN LAMPS RH
1	57EG (W)	EARTH (ALL)
1	350 (Y)	TRAILER TURN LAMPS LH

NOTE: *For the wiring color code refer to,* ***Wiring harness - Overview (A.30.A)****.*

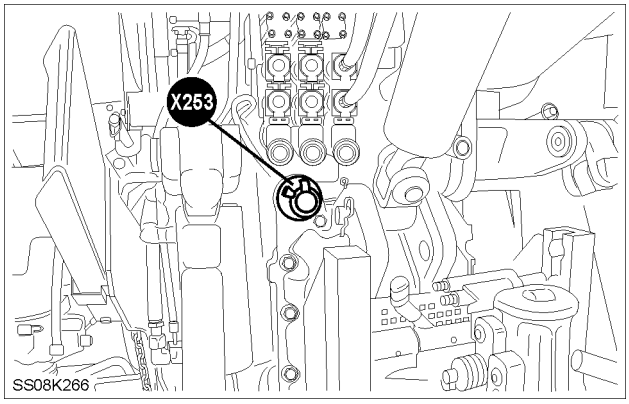

SS08K266 3

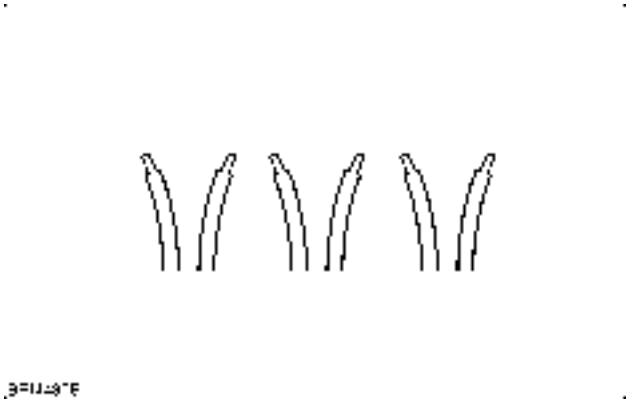

BRI4480B 4

REAR LEFT HAND TRANSMISSION

https://tractormanualz.com/

X254 TRAILER BRAKES - AIR

POS.	WIRE NUMBER	CIRCUIT REFERENCE
1	2095C (G) / 2095D (G)	INSTRUMENT SIGNAL GROUND
2	8000X (N)	TRAILER BRAKE SOLENOID
3	8010 (TN)	TRAILER BRAKE PRESSURE
4	8020B (TN)	TRAILER BRAKE PRESSURE
5	57EH (B)	EARTH (ALL)
6	8070 (L)	TRAILER PARK BRAKE SOLENOID
8	8060F (U)	TRAILER BRAKE SUPPLY

NOTE: *For the wiring color code refer to,* ***Wiring harness - Overview (A.30.A)****.*

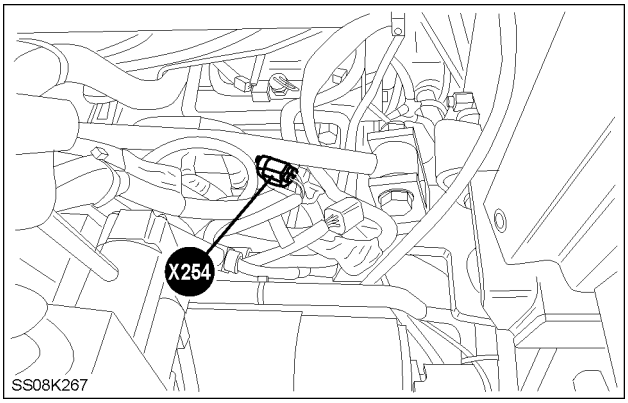

SS08K267 5

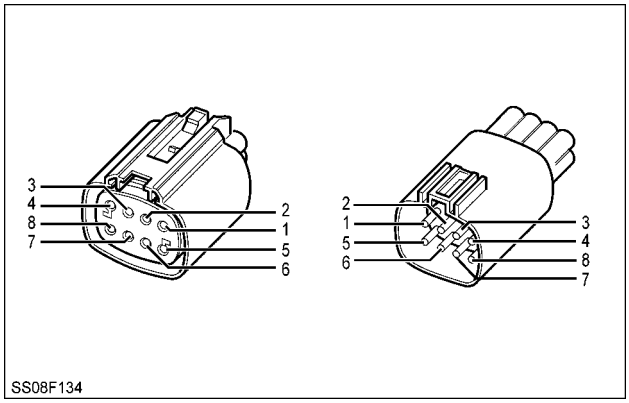

SS08F134 6

REAR RIGHT HAND TRNSMISSION

X255 TRAILER BRAKES HYDRAULIC

POS.	WIRE NUMBER	CIRCUIT REFERENCE
1	8000A (N)	TRAILER BRAKE SOLENOID
2	8010A (TN)	TRAILER BRAKE PRESSURE
3	8020A (TN)	TRAILER BRAKE PRESSURE
4	57FA (B)	EARTH (ALL)
5	8060E (U)	TRAILER BRAKE SUPPLY

NOTE: *For the wiring color code refer to,* ***Wiring harness - Overview (A.30.A)****.*

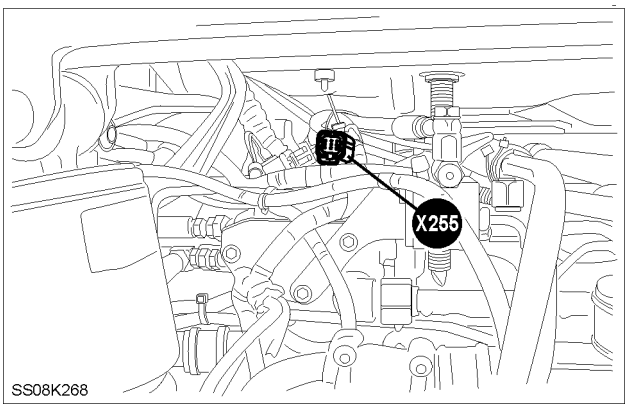

SS08K268 7

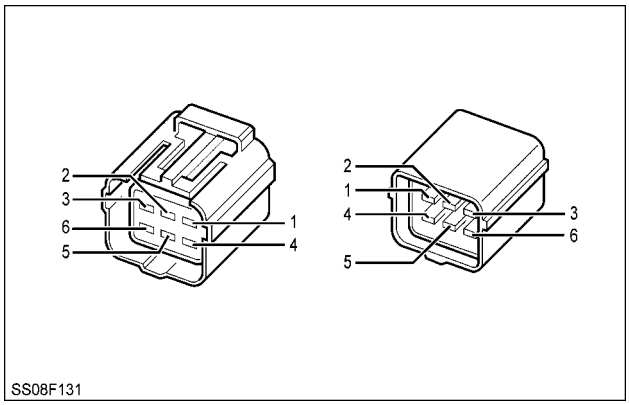

SS08F131 8

RIGHT HAND TRANSMISSION

https://tractormanualz.com/

X256 DRAFT PIN RIGHT HAND

POS.	WIRE NUMBER	CIRCUIT REFERENCE
1	60H (B/W)	SENSOR GROUND
2	5065 (TN)	EDC RIGHT PIN
3	5075A (K)	EDC VOLTAGE TO PINS

NOTE: *For the wiring color code refer to,* ***Wiring harness - Overview (A.30.A)****.*

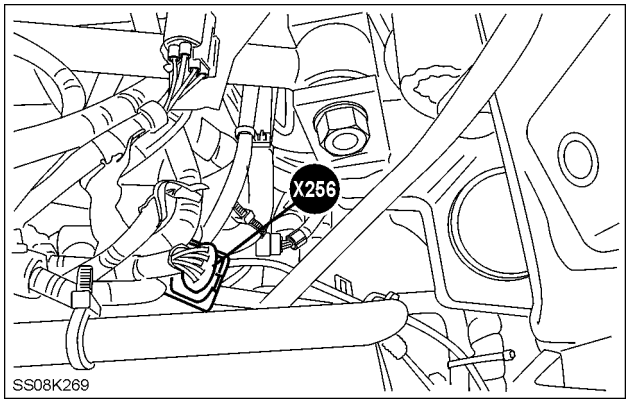

SS08K269 9

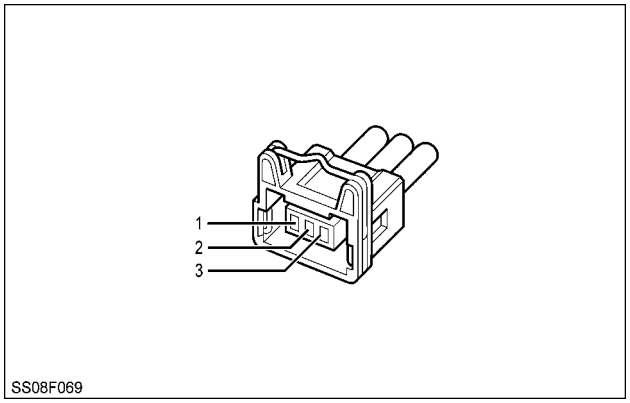

SS08F069 10

REAR RIGHT HAND TRANSMISSION

X259 FRONT SUSPENSION CONNECTOR

POS.	WIRE NUMBER	CIRCUIT REFERENCE
1	3240 (O)	RAISE SOLENOID PWR
2	3250 (O)	RAISE SOLENOID RET
3	3260 (O)	LOWER SOLENOID PWR
4	3270 (O)	LOWER SOLENOID RET
5	3280 (O)	SUSPENSION LOCKOUT SOLENOID UPPER
6	3281 (TN)	SUSPENSION LOCKOUT SOLENOID UPPER RETURN (-)
7	3285 (TN)	SUSPENSION LOCKOUT SOLENOID LOWER
8	3286 (TN)	SUSPENSION LOCKOUT SOLENOID LOWER RETURN (-)
9	- / 3295 (O)	FRONT SUSPENSION PRESSURE SWITCH SIGNAL
10	- / 57FK (B)	EARTH (ALL)
12	3295 (O) / -	FRONT SUSPENSION PRESSURE SWITCH SIGNAL
13	57ED (B) / -	EARTH (ALL)

NOTE: *For the wiring color code refer to,* ***Wiring harness - Overview (A.30.A)****.*

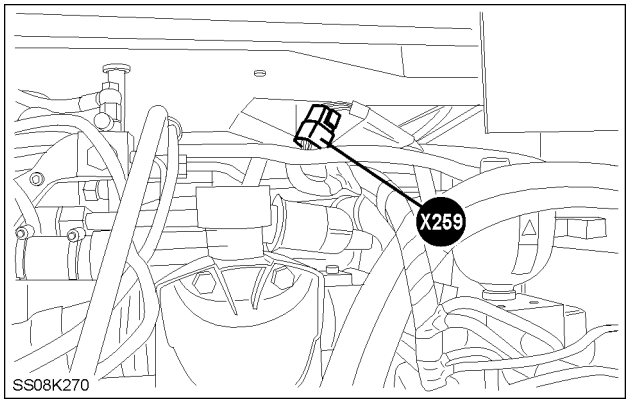

SS08K270 11

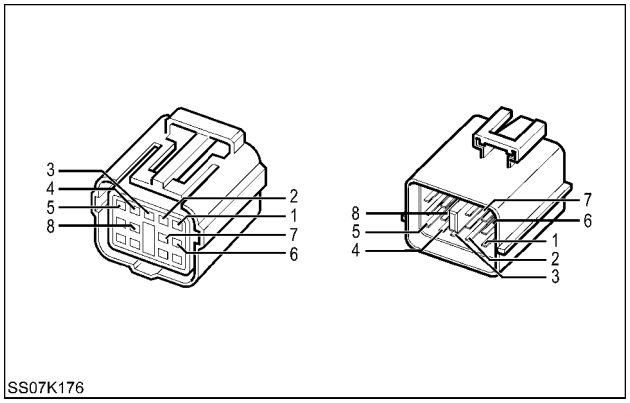

SS07K176 12

RIGHT HAND TRANSMISSION

https://tractormanualz.com/

Connector - Component diagram 26

X262 PTO TWIST SENSOR

POS.	WIRE NUMBER	CIRCUIT REFERENCE
1	7000BH (U)	TRANS CONTROL SUPPLY
2	2062 (W)	PTO TWIST SENSOR
3	60N (B/W)	SENSOR GROUND

NOTE: *For the wiring color code refer to,* ***Wiring harness - Overview (A.30.A)****.*

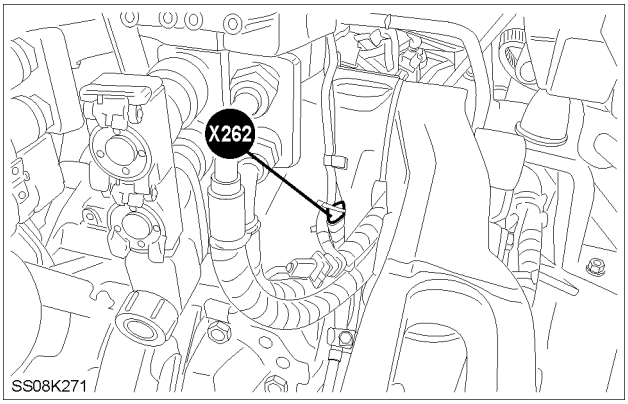

SS08K271 1

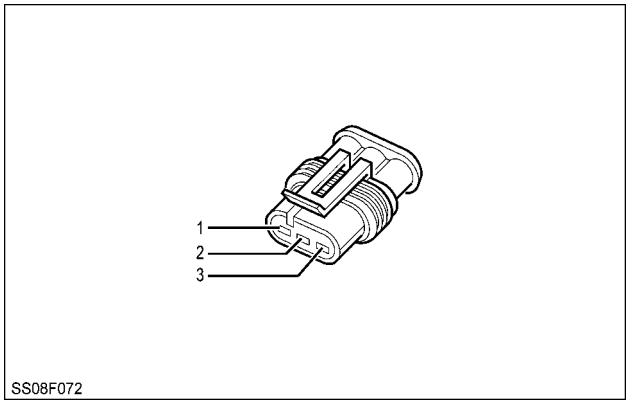

SS08F072 2

REAR RIGHT HAND TRANSMISSION

X265 FUEL TANK SENSOR

POS.	WIRE NUMBER	CIRCUIT REFERENCE
1	7000P (G)	TRANS CONTROL SUPPLY
2	2095D (G)	INSTRUMENT SIGNAL GROUND

NOTE: *For the wiring color code refer to,* ***Wiring harness - Overview (A.30.A)****.*

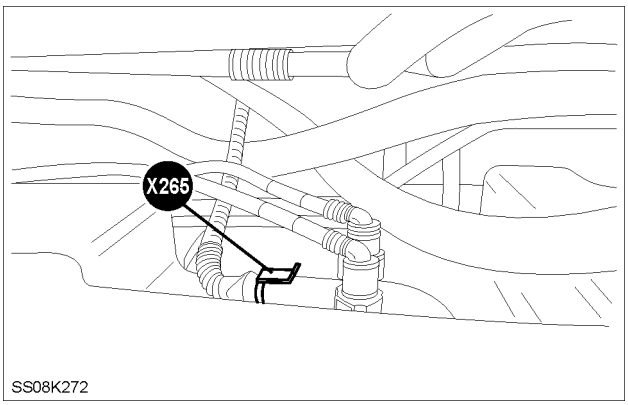

SS08K272 3

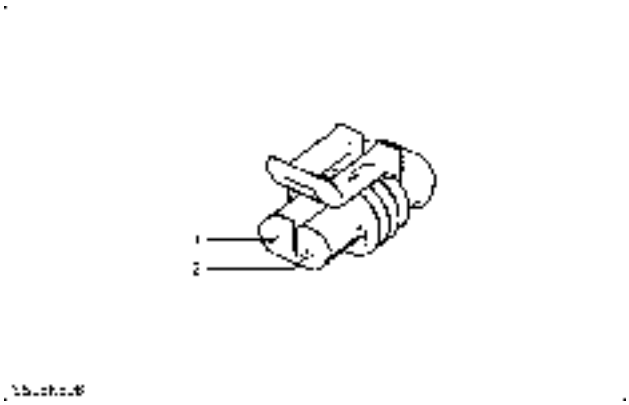

SS08K508 4

FUEL TANK

https://tractormanualz.com/

X266 DRAFT PIN LEFT HAND

POS.	WIRE NUMBER	CIRCUIT REFERENCE
1	60BA (B/W)	SENSOR GROUND
2	5070 (TN)	EDC LEFT PIN
3	5075B (K)	EDC VOLTAGE TO PINS

NOTE: *For the wiring color code refer to,* ***Wiring harness - Overview (A.30.A)****.*

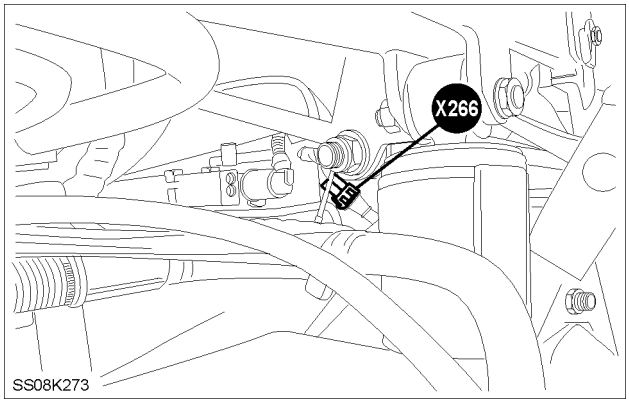

SS08K273 5

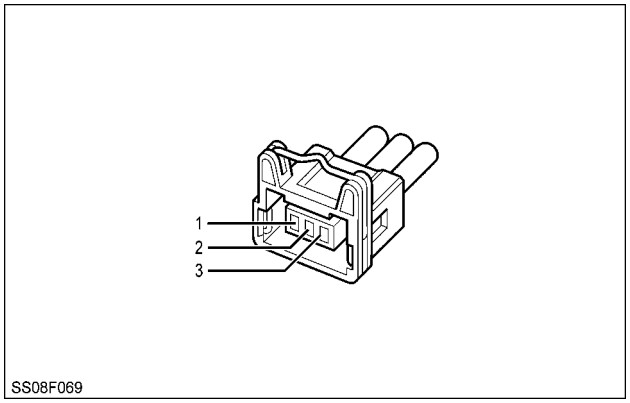

SS08F069 6

REAR LEFT HAND TRANSMISSION

X267 ROCK SHAFT POTENTIOMETER

POS.	WIRE NUMBER	CIRCUIT REFERENCE
1	5080 (K)	EDC ROCKSHAFT
2	5020M (TN)	EDC PROC +5V REF VOLTAGE DROP POSN/RATE
3	60L (B/W)	SENSOR GROUND

NOTE: *For the wiring color code refer to,* ***Wiring harness - Overview (A.30.A)****.*

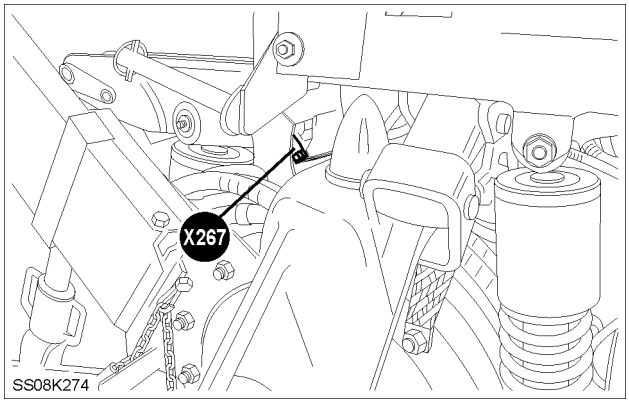

SS08K274 7

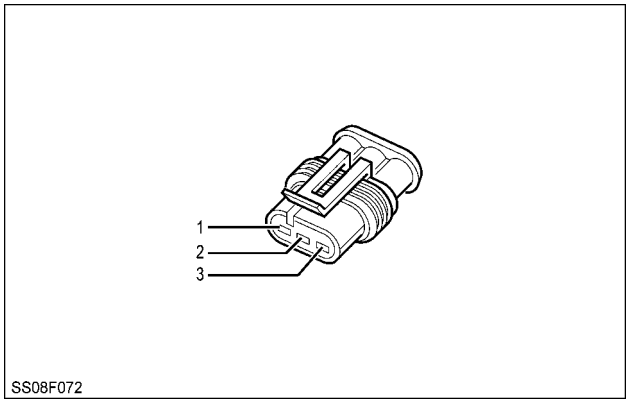

SS08F072 8

REAR RIGHT HAND TRANSMISSION

https://tractormanualz.com/

X268 EDC VALVE RAISE

POS.	WIRE NUMBER	CIRCUIT REFERENCE
1	5085 (K)	EDC VALVE UP
2	5087 (K)	EDC VALVE UP RETURN

NOTE: *For the wiring color code refer to,* ***Wiring harness - Overview (A.30.A)****.*

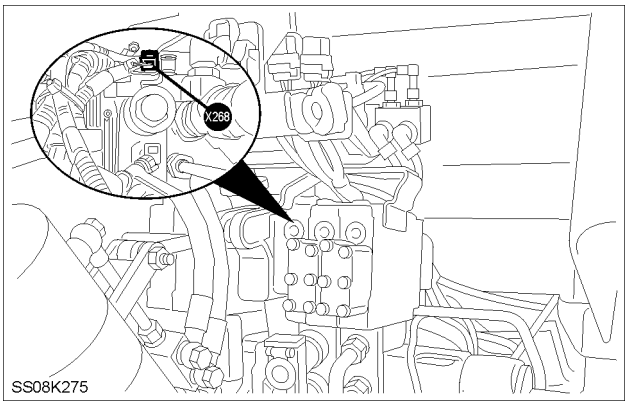

SS08K275 9

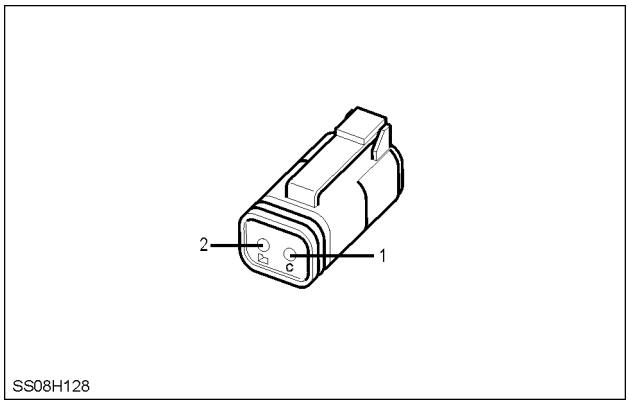

SS08H128 10

REAR RIGHT HAND TRANSMISSION

X269 EDC VALVE LOWER

POS.	WIRE NUMBER	CIRCUIT REFERENCE
1	5090 (K)	EDC VALVE DOWN
2	5097 (K)	EDC VALVE DOWN RETURN

NOTE: *For the wiring color code refer to,* ***Wiring harness - Overview (A.30.A)****.*

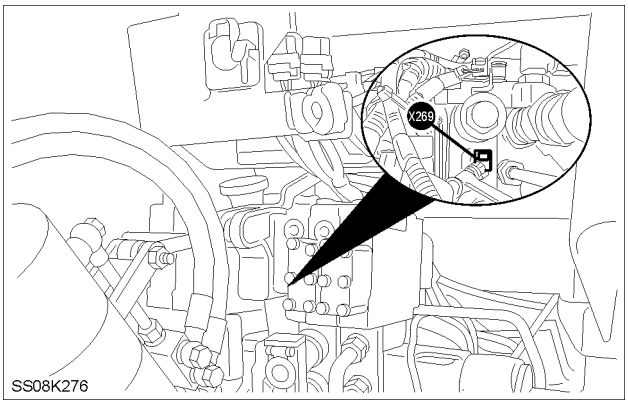

SS08K276 11

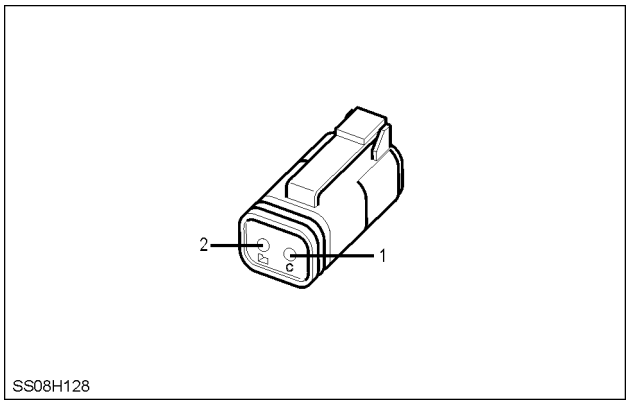

SS08H128 12

REAR RIGHT HAND TRANSMISSION

https://tractormanualz.com/

Connector - Component diagram 27

X273 TRANSMISSION OIL PRESSURE SENSOR

POS.	WIRE NUMBER	CIRCUIT REFERENCE
A	60BX (B/W)	SENSOR GROUND
B	5020 (TN)	EDC PROC +5V REF VOLTAGE DROP POSN/RATE
C	2012 (Y)	TRANS OIL PRESSURE WARNING LAMP

NOTE: *For the wiring color code refer to,* ***Wiring harness - Overview (A.30.A)****.*

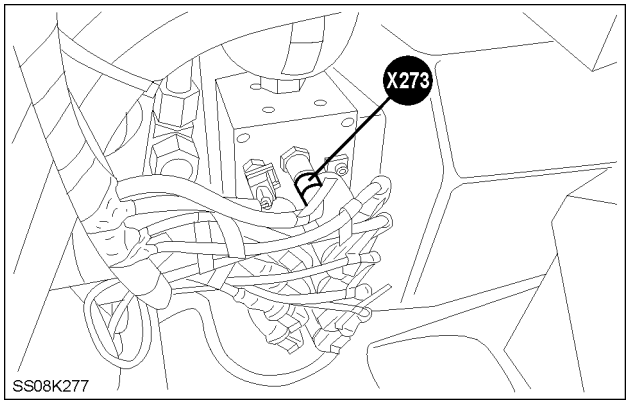

SS08K277 1

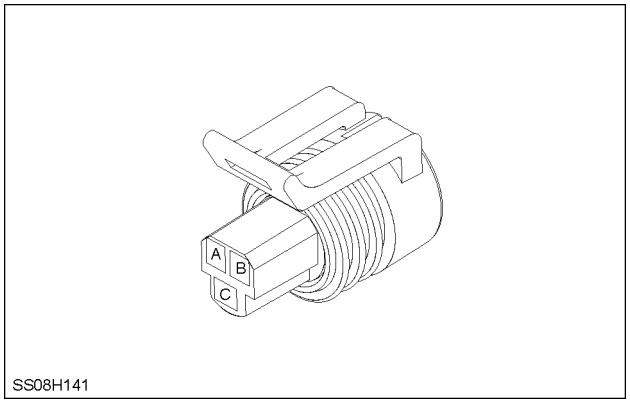

SS08H141 2

RIGHT HAND TRANSMISSION

X276 DIFF. LOCK SOLENOID

POS.	WIRE NUMBER	CIRCUIT REFERENCE
1	7080 (LTG)	DIFF-LOCK SOLENOID FEED
2	57ES (B)	EARTH (ALL)

NOTE: *For the wiring color code refer to,* ***Wiring harness - Overview (A.30.A)****.*

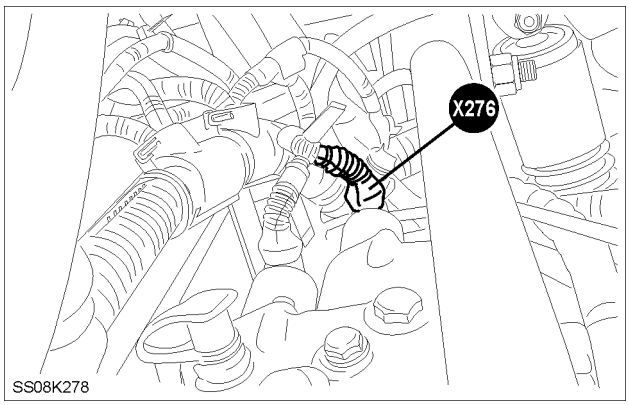

SS08K278 3

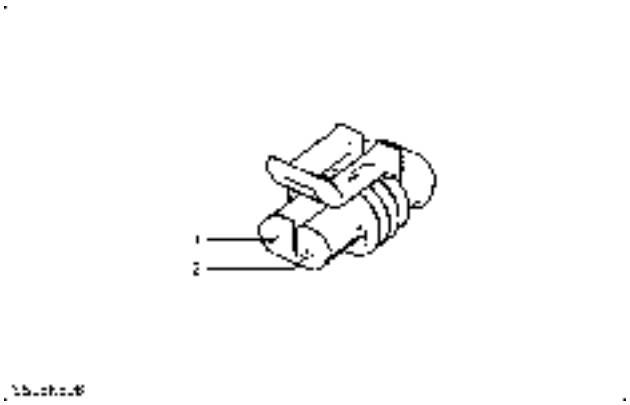

SS08K508 4

REAR RIGHT HAND TRANSMISSION

https://tractormanualz.com/

X277 REAR P.T.O BRAKE SOLENOID

POS.	WIRE NUMBER	CIRCUIT REFERENCE
1	2130 (N)	PTO BRAKE SOLENOID
2	57ET (B)	EARTH (ALL)

NOTE: *For the wiring color code refer to,* ***Wiring harness - Overview (A.30.A)****.*

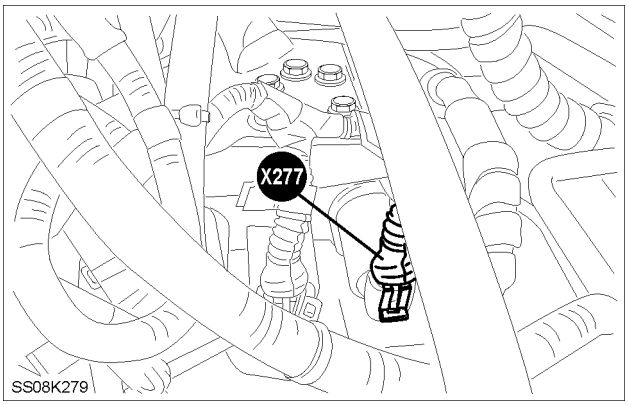

SS08K279 5

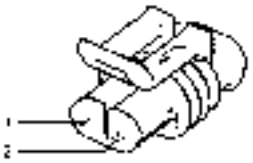

SS08K508 6

REAR LEFT HAND TRANSMISSION

X278 REAR P.T.O SOLENOID

POS.	WIRE NUMBER	CIRCUIT REFERENCE
1	2042 (O)	PTO SOLENOID-REAR
2	2051 (O)	PTO SOLENOID RETURN (-)

NOTE: *For the wiring color code refer to,* ***Wiring harness - Overview (A.30.A)****.*

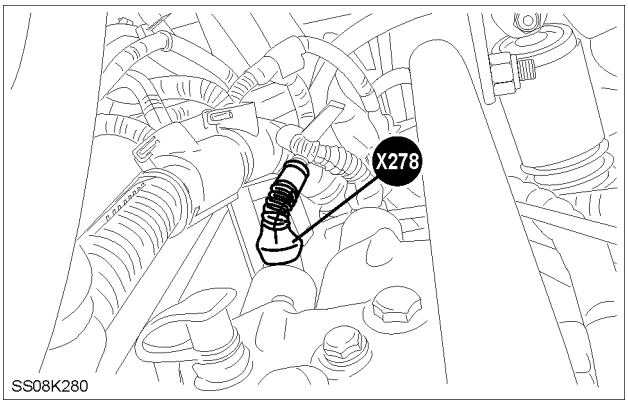

SS08K280 7

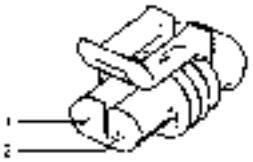

SS08K508 8

REAR RIGHT HAND TRANSMISSION

https://tractormanualz.com/

X279 4WD SOLENOID

POS.	WIRE NUMBER	CIRCUIT REFERENCE
1	3024 (Y)	2WD SOLENOID
2	57EX (B)	EARTH (ALL)

NOTE: *For the wiring color code refer to,* ***Wiring harness - Overview (A.30.A)****.*

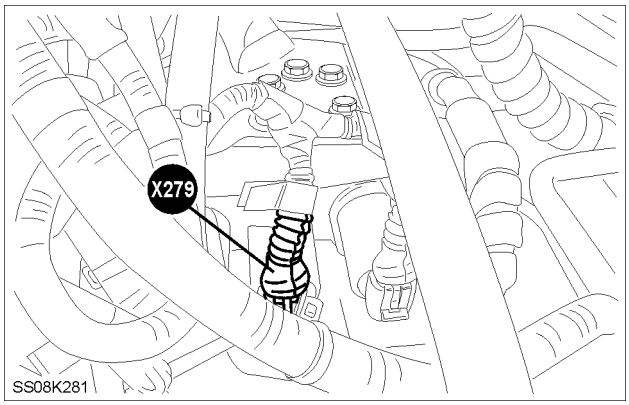

SS08K281 9

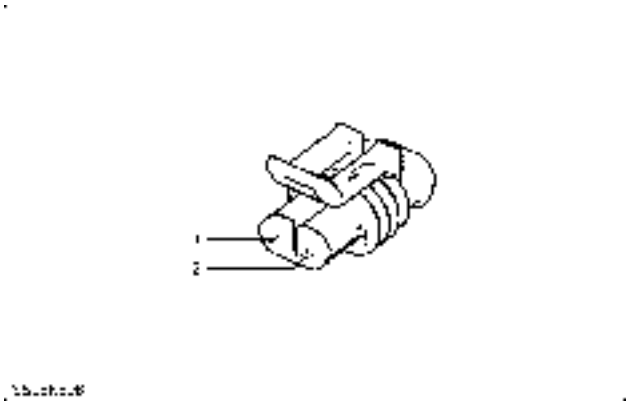

SS08K508 10

REAR LEFT HAND TRANSMISSION

https://tractormanualz.com/

Connector - Component diagram 28

X289 FLY WHEEL SPEED SENSOR

POS.	WIRE NUMBER	CIRCUIT REFERENCE
1	7000BG (U)	TRANS CONTROL SUPPLY
2	7760 (W)	TORQUE SENSOR
3	60AV (B/W)	SENSOR GROUND

NOTE: *For the wiring color code refer to,* ***Wiring harness - Overview (A.30.A)****.*

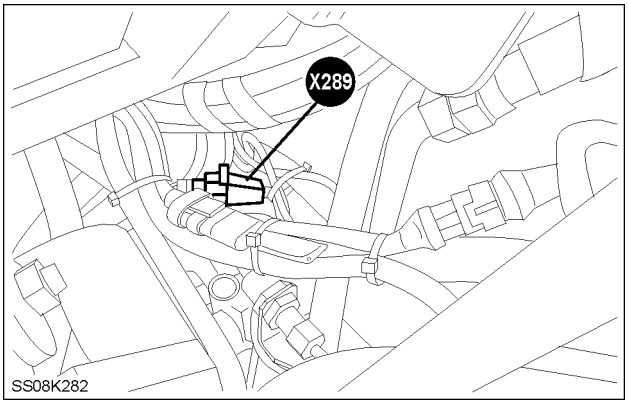

SS08K282 1

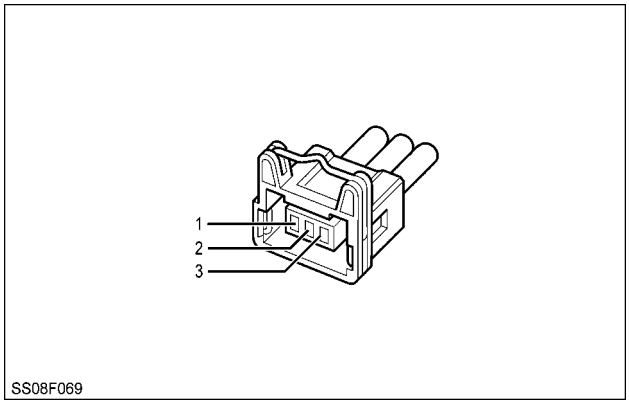

SS08F069 2

TOP OF TRANSMISSION

https://tractormanualz.com/

Connector - Component diagram 29

X290 TRANS OIL TEMPERATURE SENSOR

POS.	WIRE NUMBER	CIRCUIT REFERENCE
1	7500 (G)	TRANS OIL TEMP. SENSOR
2	60AT (B/W)	SENSOR GROUND

NOTE: *For the wiring color code refer to,* ***Wiring harness - Overview (A.30.A)****.*

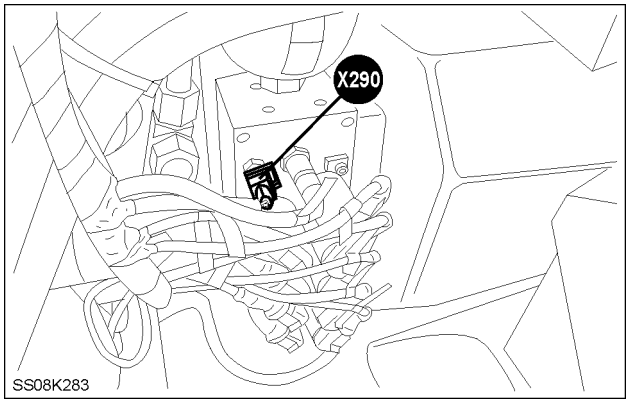

SS08K283 1

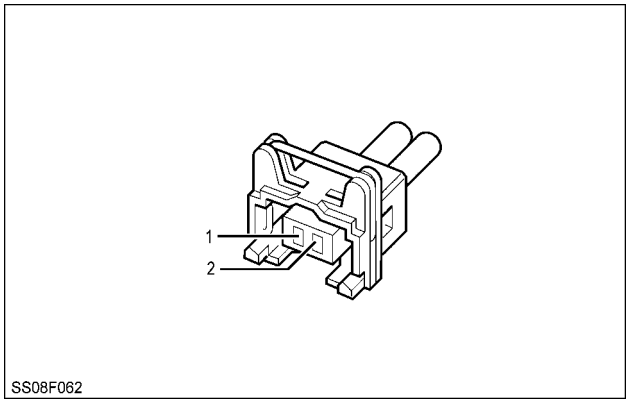

SS08F062 2

RIGHT HAND TRANSMISSION

https://tractormanualz.com/

Connector - Component diagram 30

X302 POWER STEERING PRESSURE SWITCH PIN 2

POS.	WIRE NUMBER	CIRCUIT REFERENCE
1	57FC (B)	EARTH (ALL)

NOTE: *For the wiring color code refer to,* ***Wiring harness - Overview (A.30.A)****.*

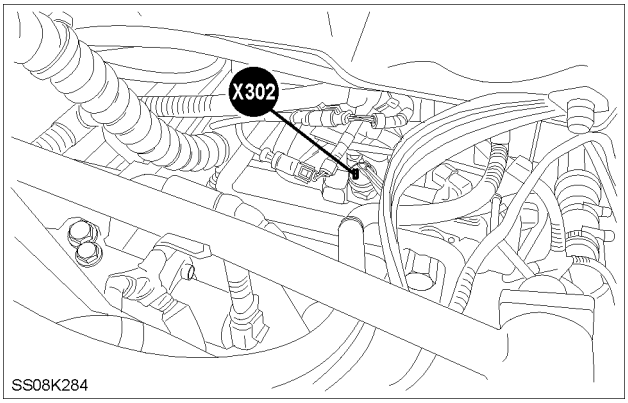

SS08K284 1

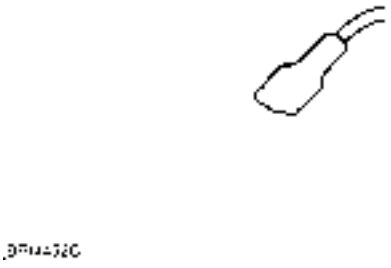

BRI4452C 2

TOP OF TRANSMISSION

X303 POWER STEERING PRESSURE SWITCH PIN 1

POS.	WIRE NUMBER	CIRCUIT REFERENCE
1	3500 (W)	POWER STEERING PRESSURE SIGNAL

NOTE: *For the wiring color code refer to,* ***Wiring harness - Overview (A.30.A)****.*

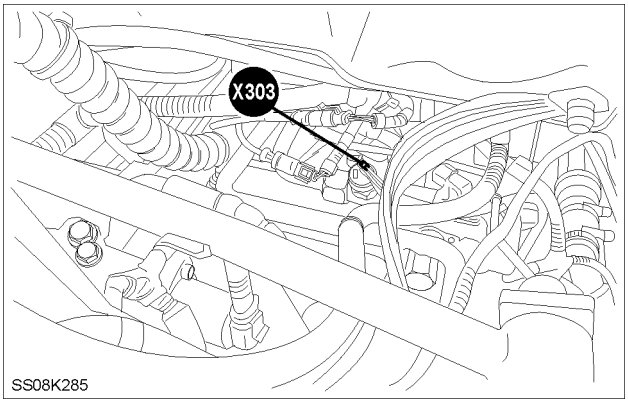

SS08K285 3

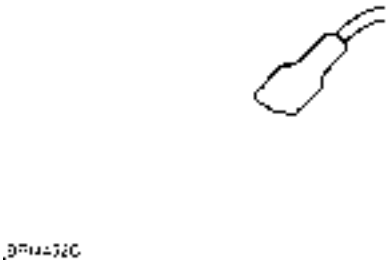

BRI4452C 4

TOP OF TRANSMISSION

https://tractormanualz.com/

X304 CAN TERMINATOR RESISTOR

POS.	WIRE NUMBER	CIRCUIT REFERENCE
1	5515F (S)	EHR +12V IGN.
2	5510A (U)	EHR CAN LOW
3	5500A (R)	EHR CAN HIGH
4	57FM (B)	EARTH (ALL)

NOTE: *For the wiring color code refer to,* ***Wiring harness - Overview (A.30.A)****.*

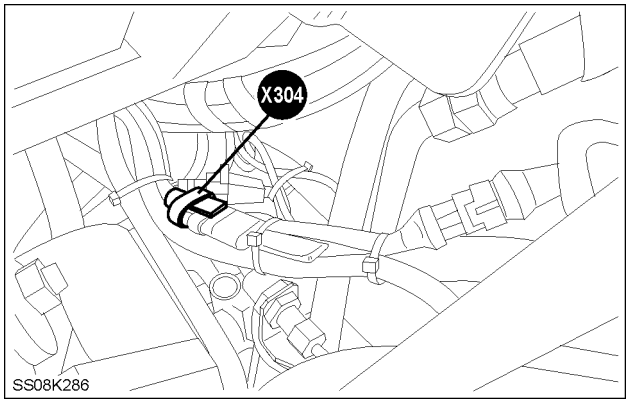

SS08K286 5

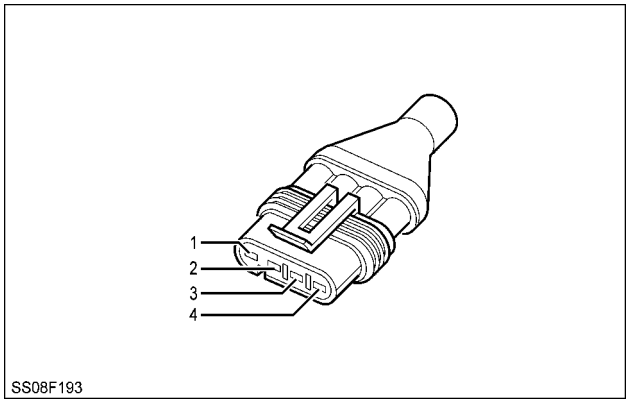

SS08F193 6

TOP OF TRANSMISSION

X304 MAIN EXTENSION

POS.	WIRE NUMBER	CIRCUIT REFERENCE
1	5515C (S)	EHR +12V IGN.
2	5510M (U)	EHR CAN LOW
3	5500M (R)	EHR CAN HIGH
4	57MA (B)	EARTH (ALL)

NOTE: *For the wiring color code refer to,* ***Wiring harness - Overview (A.30.A)****.*

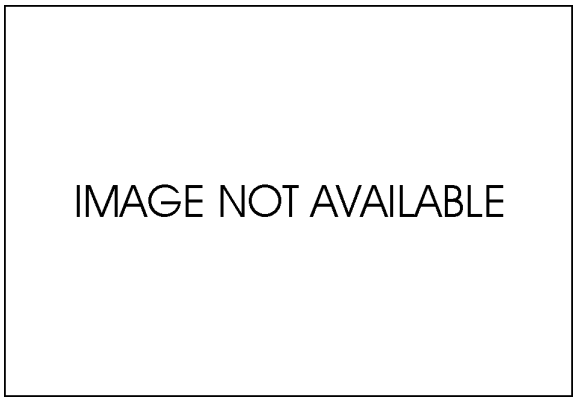

INA 7

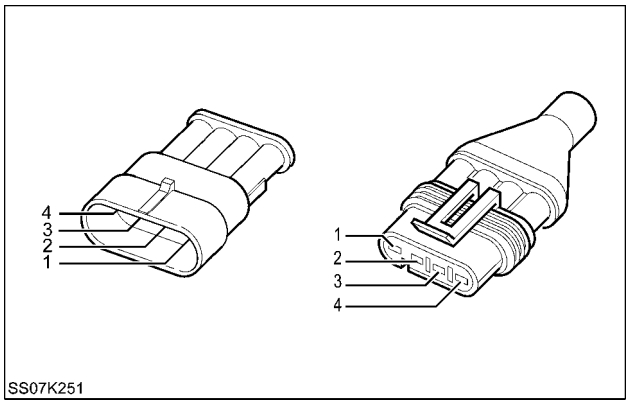

SS07K251 8

TOP OF TRANSMISSION

https://tractormanualz.com/

X305 EHR VALVE CONNECTOR 1

POS.	WIRE NUMBER	CIRCUIT REFERENCE
1	5515A (S)	EHR +12V IGN.
2	5510K (U)	EHR CAN LOW
3	5500K (R)	EHR CAN HIGH
4	57FE (B)	EARTH (ALL)

NOTE: *For the wiring color code refer to,* ***Wiring harness - Overview (A.30.A)****.*

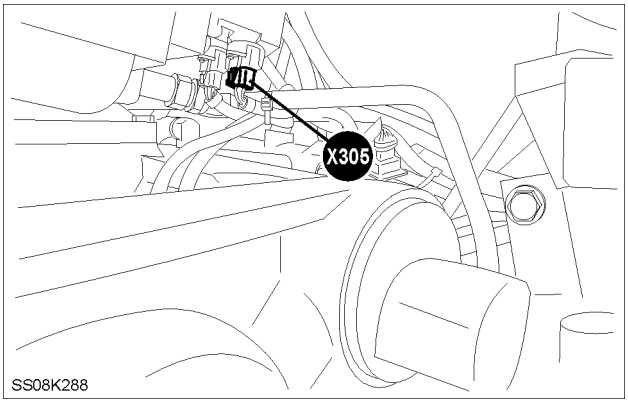

SS08K288 9

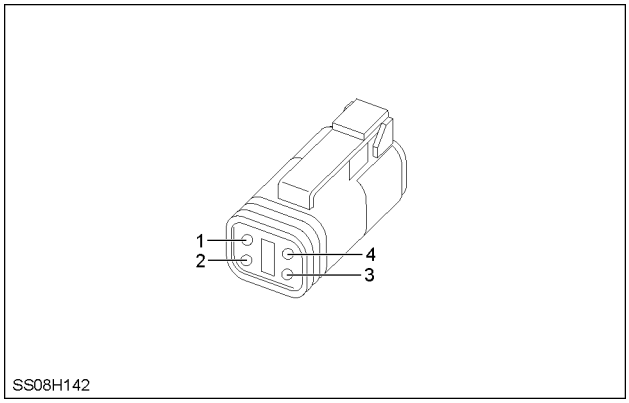

SS08H142 10

REAR RIGHT HAND TRANSMISSION

X306 EHR VALVE CONNECTOR 2

POS.	WIRE NUMBER	CIRCUIT REFERENCE
1	5515B (S)	EHR +12V IGN.
2	5510H (U)	EHR CAN LOW
3	5500H (R)	EHR CAN HIGH
4	57FE (B)	EARTH (ALL)

NOTE: *For the wiring color code refer to,* ***Wiring harness - Overview (A.30.A)****.*

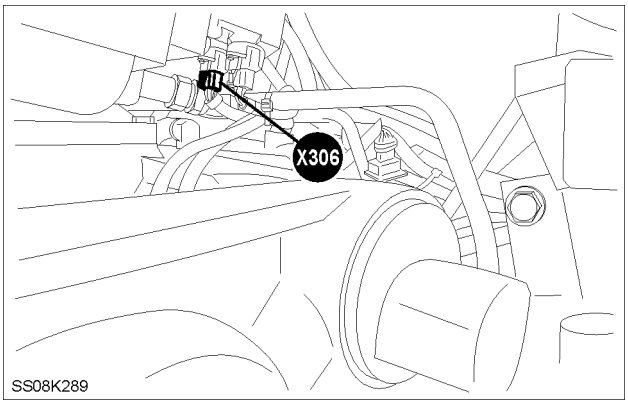

SS08K289 11

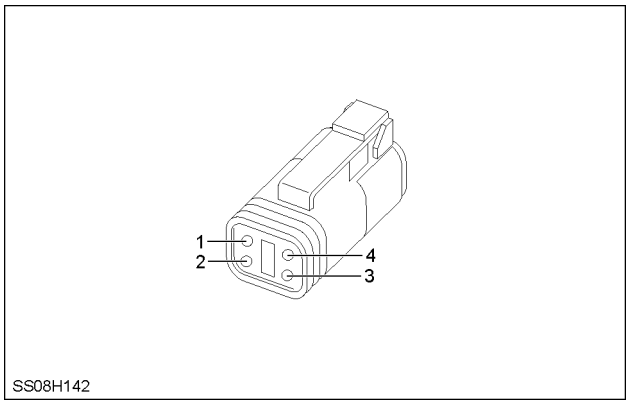

SS08H142 12

REAR RIGHT HAND TRANSMISSION

https://tractormanualz.com/

X307 EHR VALVE CONNECTOR 3

POS.	WIRE NUMBER	CIRCUIT REFERENCE
1	5515C (S)	EHR +12V IGN.
2	5510F (U)	EHR CAN LOW
3	5500F (R)	EHR CAN HIGH
4	57FF (B)	EARTH (ALL)

NOTE: *For the wiring color code refer to,* ***Wiring harness - Overview (A.30.A)****.*

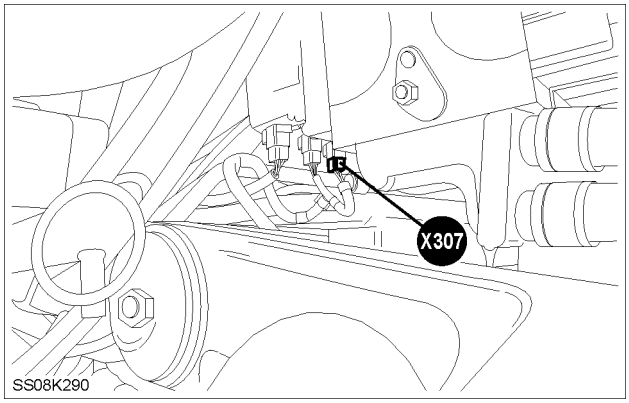

SS08K290 13

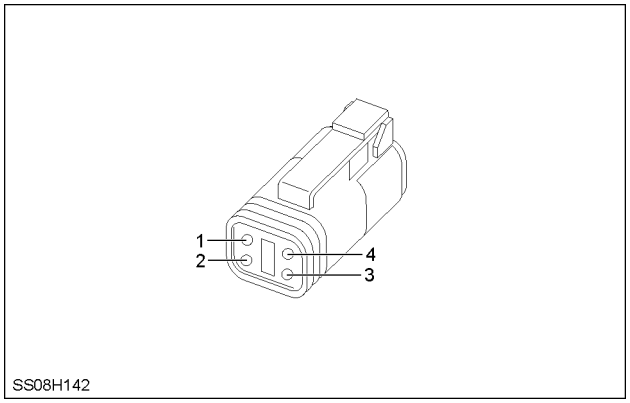

SS08H142 14

REAR LEFT HAND TRANSMISSION

X308 EHR VALVE CONNECTOR 4

POS.	WIRE NUMBER	CIRCUIT REFERENCE
1	5515D (S)	EHR +12V IGN.
2	5510D (U)	EHR CAN LOW
3	5500D (R)	EHR CAN HIGH
4	57FG (B)	EARTH (ALL)

NOTE: *For the wiring color code refer to,* ***Wiring harness - Overview (A.30.A)****.*

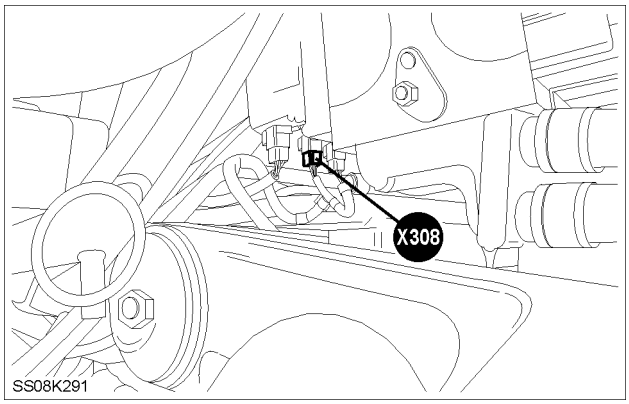

SS08K291 15

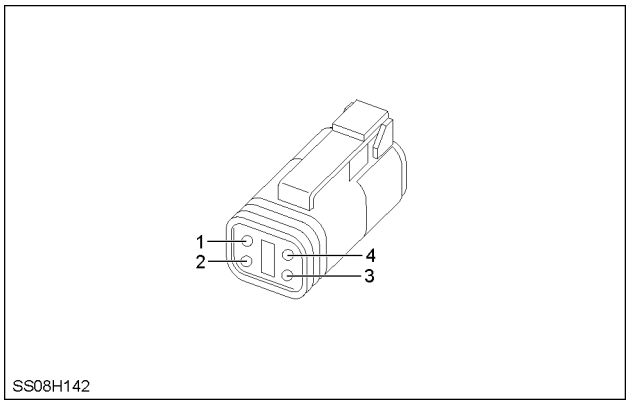

SS08H142 16

REAR LEFT HAND TRANSMISSION

https://tractormanualz.com/

X309 EHR VALVE CONNECTOR 5

POS.	WIRE NUMBER	CIRCUIT REFERENCE
1	5515E (S)	EHR +12V IGN.
2	5510B (U)	EHR CAN LOW
3	5500B (R)	EHR CAN HIGH
4	57FK (B)	EARTH (ALL)

NOTE: *For the wiring color code refer to,* ***Wiring harness - Overview (A.30.A)****.*

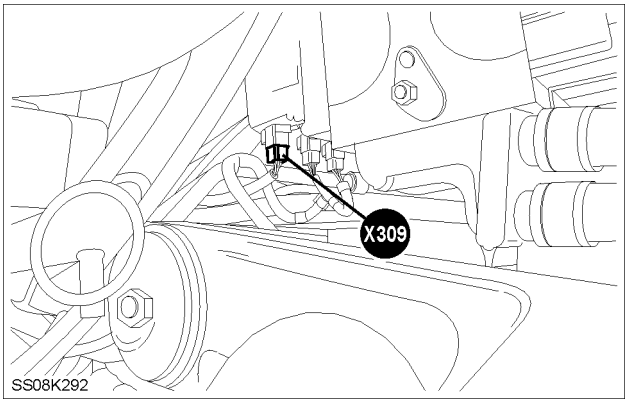

SS08K292 17

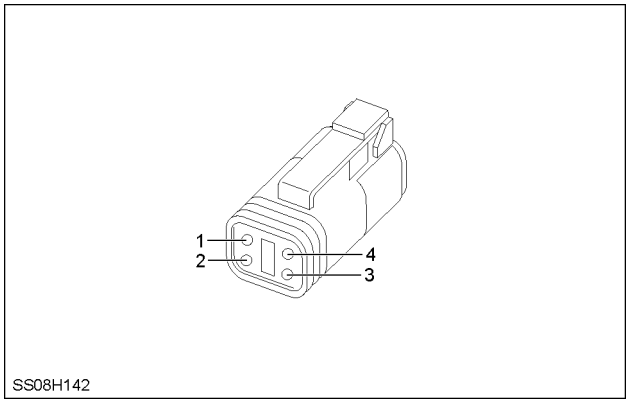

SS08H142 18

REAR LEFT HAND TRANSMISSION

https://tractormanualz.com/

Connector - Component diagram 32

X326 EARTH TRANSMISSION

POS.	WIRE NUMBER	CIRCUIT REFERENCE
1	57M (B)	EARTH (ALL)
1	57EG (W)	EARTH (ALL)
1	57HZ (B)	EARTH (ALL)

NOTE: *For the wiring color code refer to,* ***Wiring harness - Overview (A.30.A)****.*

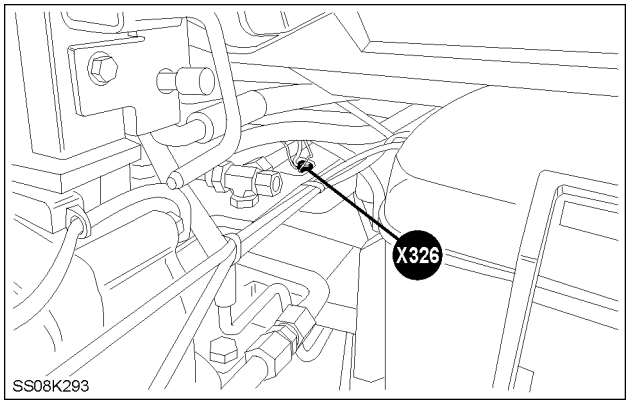

SS08K293 1

BRI4404B 2

LEFT HAND TOP OF TRANSMISSION

https://tractormanualz.com/

Connector - Component diagram 33

X331 WORKLAMP RIGHT HAND

POS.	WIRE NUMBER	CIRCUIT REFERENCE
A	1073C (L)	WORKLAMP FRONT FEED
B	57H (B)	EARTH (ALL)

NOTE: For the wiring color code refer to, **Wiring harness - Overview (A.30.A)**.

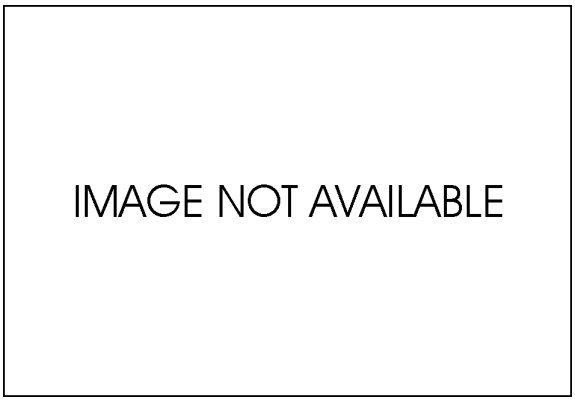

INA 1

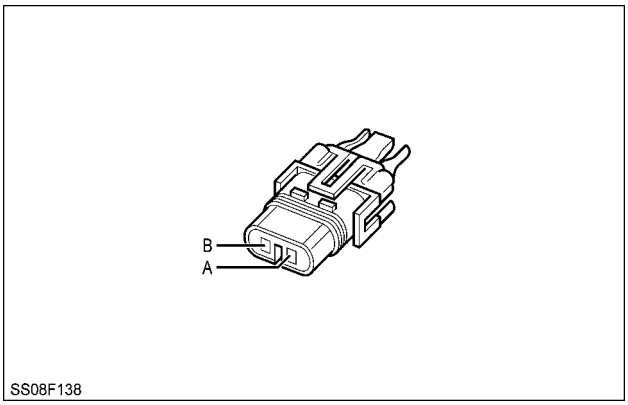

SS08F138 2

FRONT HOOD

X332 CORNER LAMP RIGHT HAND

POS.	WIRE NUMBER	CIRCUIT REFERENCE
A	1073B (L)	WORKLAMP FRONT FEED
B	57H (B)	EARTH (ALL)

NOTE: *For the wiring color code refer to,* ***Wiring harness - Overview (A.30.A)****.*

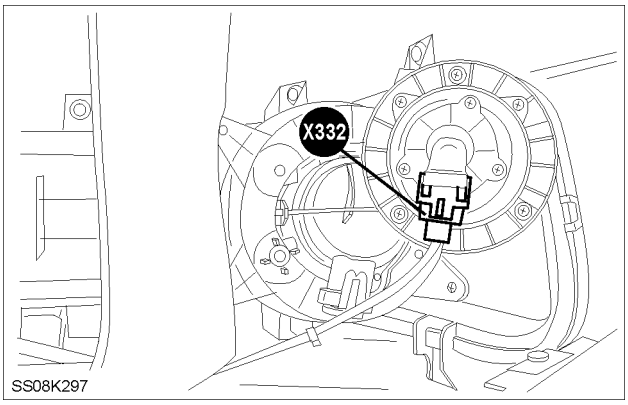

SS08K297 3

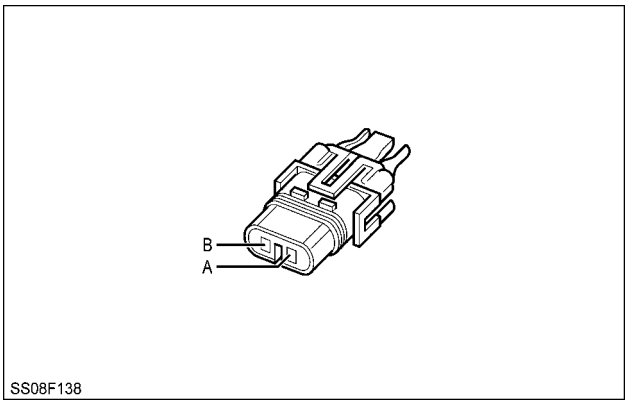

SS08F138 4

FRONT RIGHT HAND HOOD

https://tractormanualz.com/

X333 HEADLAMP RIGHT HAND

POS.	WIRE NUMBER	CIRCUIT REFERENCE
A	1030C (U)	HEADLAMP DIP BEAM
B	57D (B)	EARTH (ALL)
C	1027C (U)	HEADLAMP MAIN BEAM

NOTE: *For the wiring color code refer to,* ***Wiring harness - Overview (A.30.A)****.*

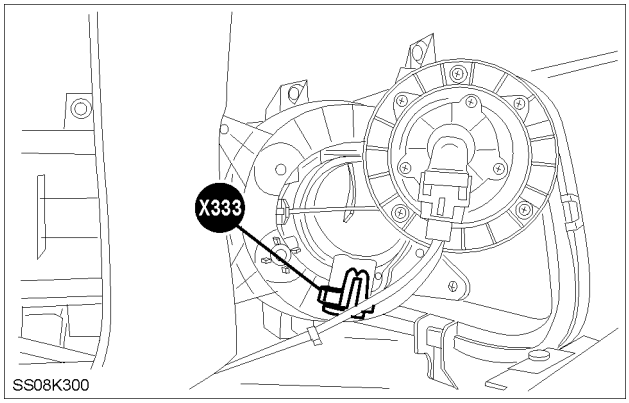

SS08K300 5

BRI4466B 6

FRONT RIGHT HAND HOOD

X334 HORN

POS.	WIRE NUMBER	CIRCUIT REFERENCE
1	57E (B)	EARTH (ALL)

NOTE: *For the wiring color code refer to,* ***Wiring harness - Overview (A.30.A)****.*

IMAGE NOT AVAILABLE

INA 7

BRI4437B 8

FRONT HOOD

https://tractormanualz.com/

X335 HORN

POS.	WIRE NUMBER	CIRCUIT REFERENCE
1	376 (L)	HORN FEED

NOTE: *For the wiring color code refer to,* ***Wiring harness - Overview (A.30.A)****.*

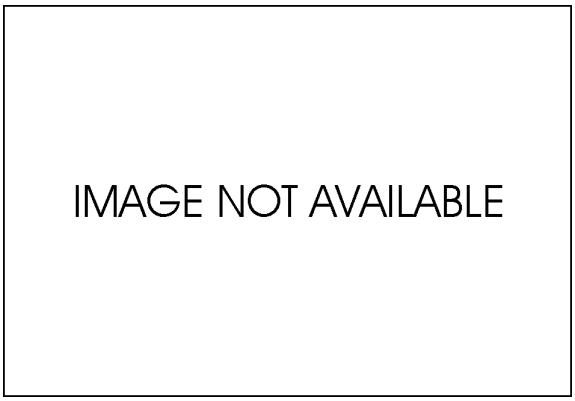

INA 9

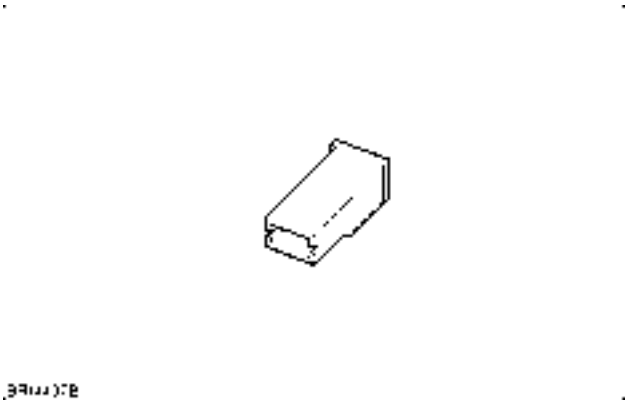

BRI4437B 10

FRONT HOOD

X336 HEADLAMP LEFT HAND

POS.	WIRE NUMBER	CIRCUIT REFERENCE
A	1030D (U)	HEADLAMP DIP BEAM
B	57C (B)	EARTH (ALL)
C	1027D (U)	HEADLAMP MAIN BEAM

NOTE: *For the wiring color code refer to,* ***Wiring harness - Overview (A.30.A)****.*

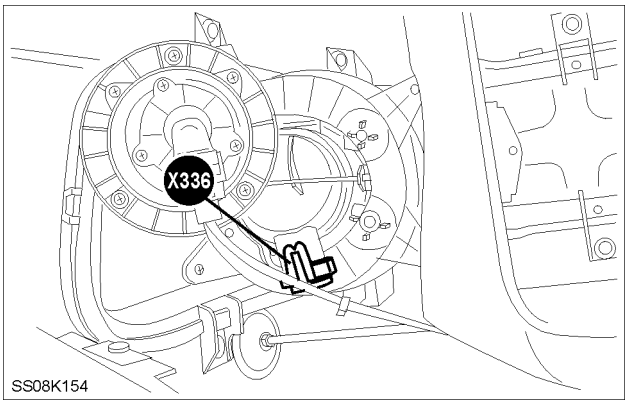

SS08K154 11

BRI4466B 12

FRONT LEFT HAND HOOD

https://tractormanualz.com/

X337 CORNER LAMP LEFT HAND

POS.	WIRE NUMBER	CIRCUIT REFERENCE
A	1073A (L)	WORKLAMP FRONT FEED
B	57F (B)	EARTH (ALL)

NOTE: *For the wiring color code refer to,* ***Wiring harness - Overview (A.30.A)****.*

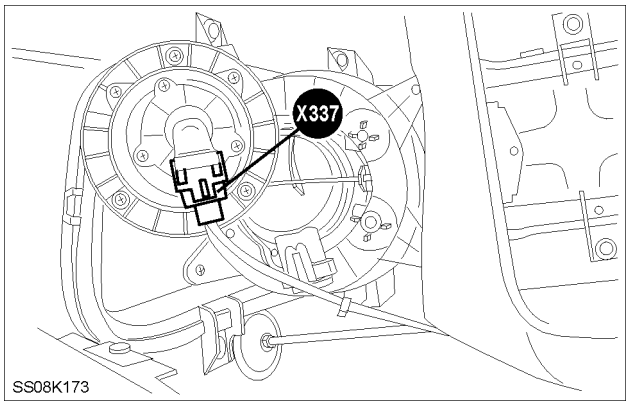

SS08K173 13

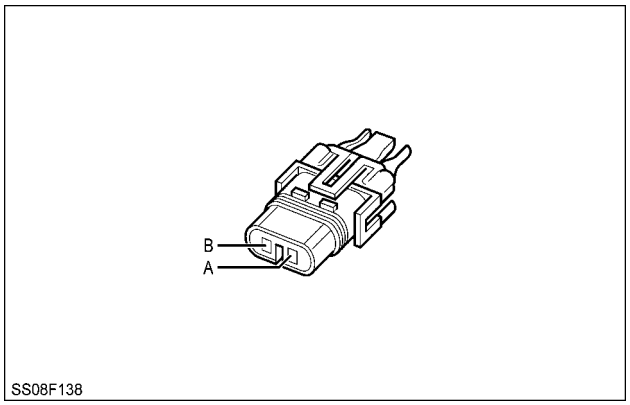

SS08F138 14

FRONT LEFT HAND HOOD

https://tractormanualz.com/

Connector - Component diagram 39

X392 FRONT HITCH LOWER

POS.	WIRE NUMBER	CIRCUIT REFERENCE
1	(R)	
2	(R)	
3	(Y)	
4	(U)	

NOTE: *For the wiring color code refer to,* ***Wiring harness - Overview (A.30.A)****.*

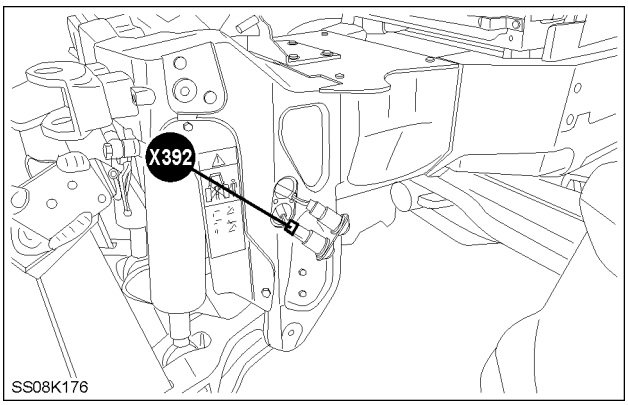

SS08K176 1

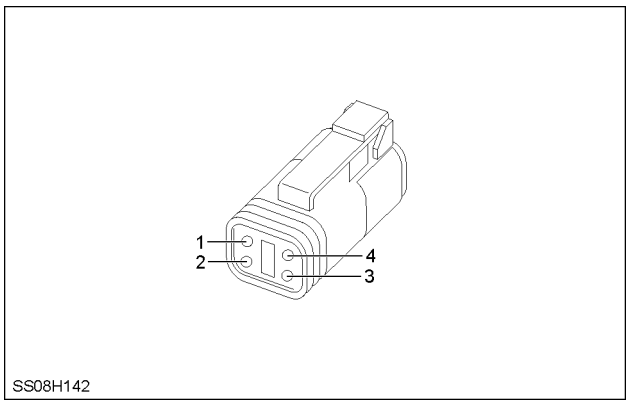

SS08H142 2

LEFT HAND FRONT HITCH

X393 FRONT PTO SOLENOID

POS.	WIRE NUMBER	CIRCUIT REFERENCE
1	(N)	
2	(P)	

NOTE: *For the wiring color code refer to,* ***Wiring harness - Overview (A.30.A)****.*

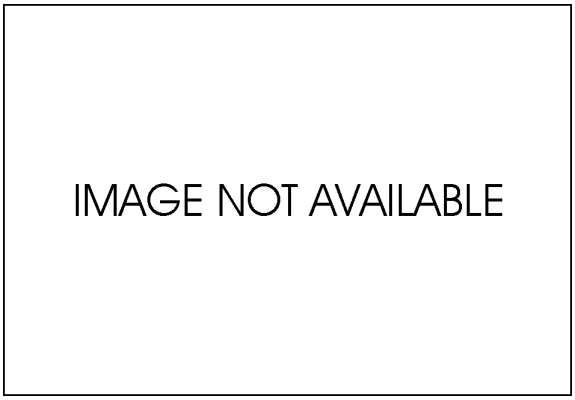

INA 3

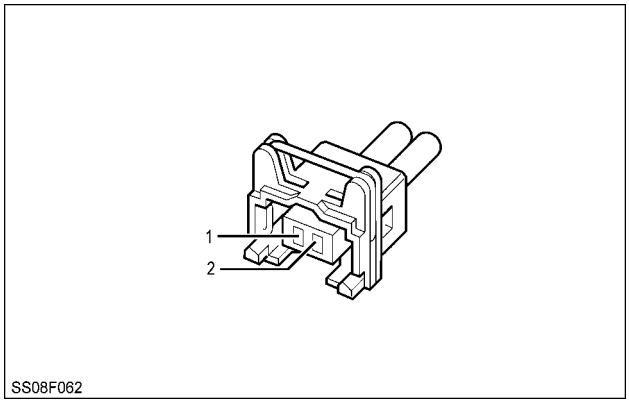

SS08F062 4

FRONT HITCH

https://tractormanualz.com/

X394 FRONT HITCH RAISE

POS.	WIRE NUMBER	CIRCUIT REFERENCE
1	(R)	
2	(U)	
3	(G)	

NOTE: *For the wiring color code refer to,* ***Wiring harness - Overview (A.30.A)****.*

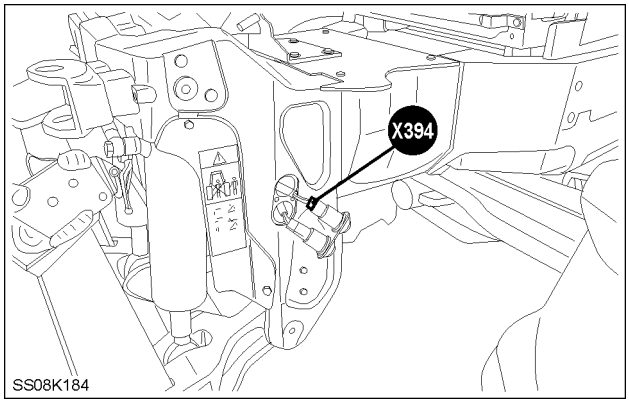

SS08K184 5

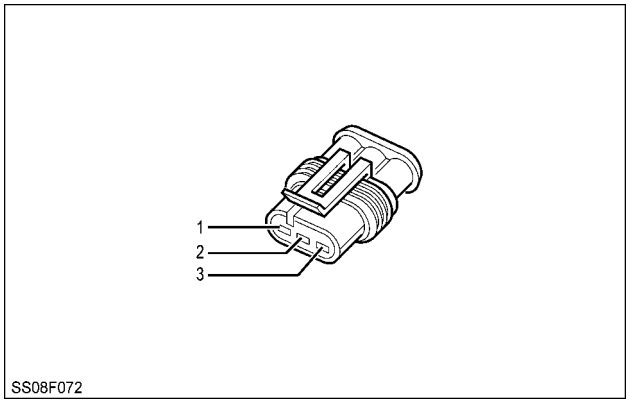

SS08F072 6

LEFT HAND FRONT HITCH

X395 FRONT HITCH POSITION SENSOR

POS.	WIRE NUMBER	CIRCUIT REFERENCE
1	(B)	
2	(R)	
3	(W)	

NOTE: *For the wiring color code refer to,* ***Wiring harness - Overview (A.30.A)****.*

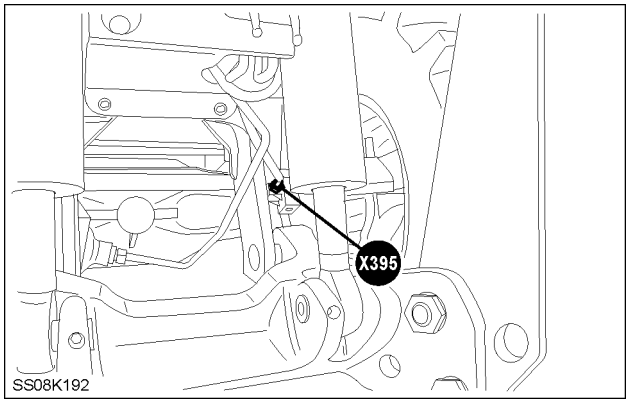

SS08K192 7

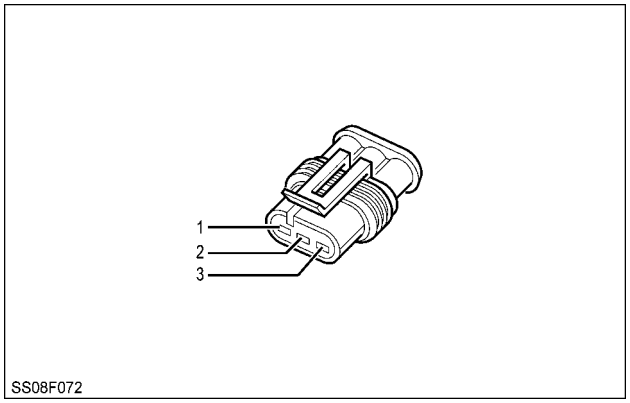

SS08F072 8

FRONT HITCH

https://tractormanualz.com/

Connector - Component diagram 40

X401 EHR 3 SWITCH FENDER RIGHT AND LEFT

POS.	WIRE NUMBER	CIRCUIT REFERENCE
1	5574 (L)	FENDER 3RD EHR SWITCH – UP
2	5200W (N)	EDC VALVE SUPPLY
3	5576 (L)	FENDER 3RD EHR SWITCH – DOWN

NOTE: *For the wiring color code refer to,* ***Wiring harness - Overview (A.30.A)****.*

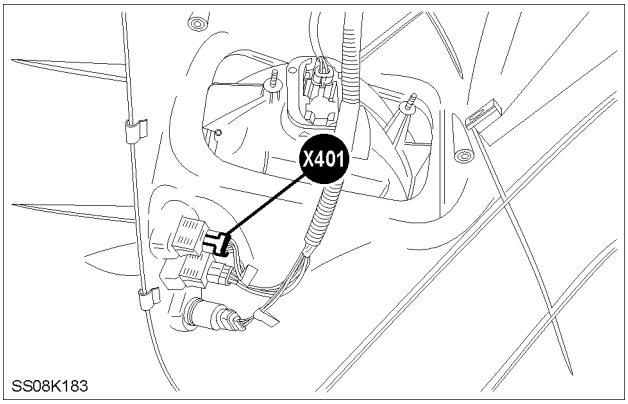

SS08K183 1

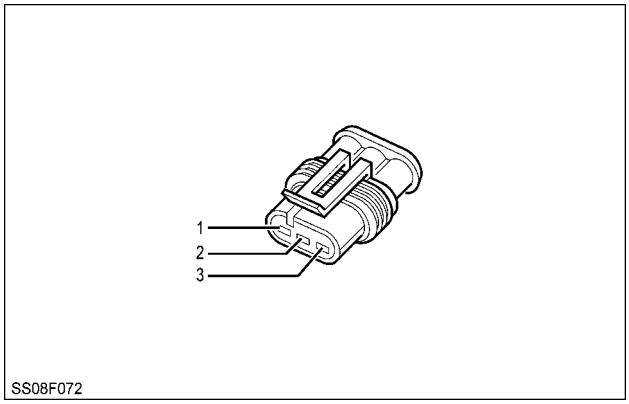

SS08F072 2

RIGHT HAND REAR FENDER

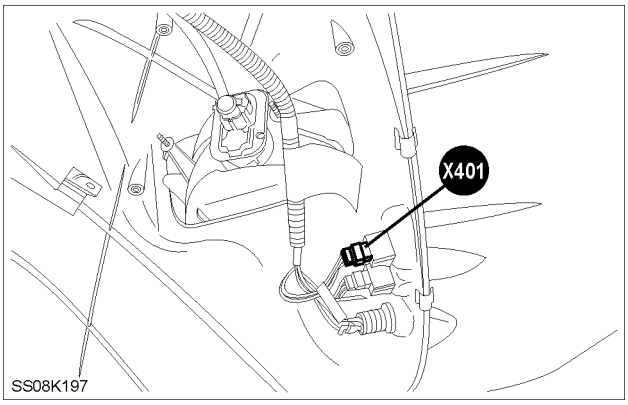

SS08K197 3

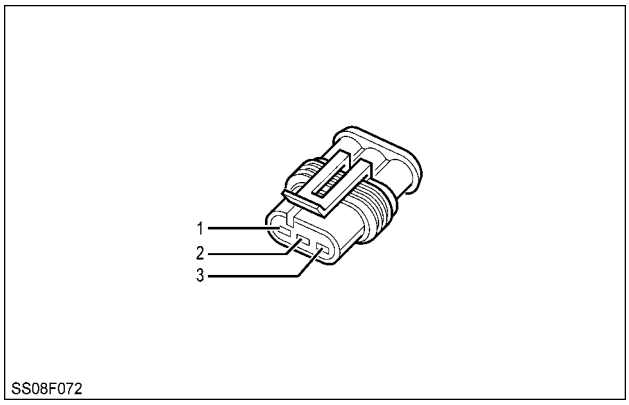

SS08F072 4

LEFT HAND REAR FENDER

https://tractormanualz.com/

X402 REAR FENDER 3RD REMOTE LEFT

POS.	WIRE NUMBER	CIRCUIT REFERENCE
3	5574B (L) / 5574 (L)	FENDER 3RD EHR SWITCH – UP
4	5576B (L) / 5576 (L)	FENDER 3RD EHR SWITCH – DOWN

NOTE: *For the wiring color code refer to,* ***Wiring harness - Overview (A.30.A)****.*

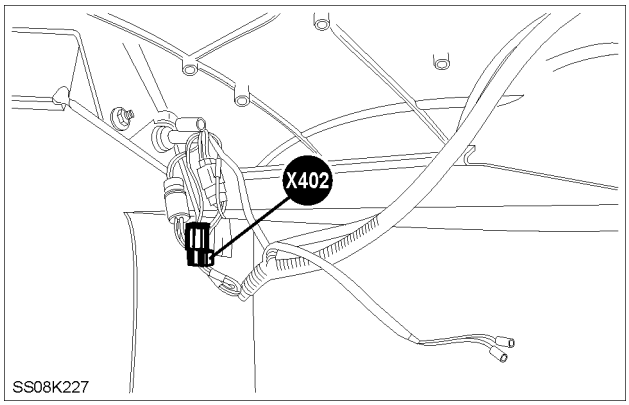

SS08K227 5

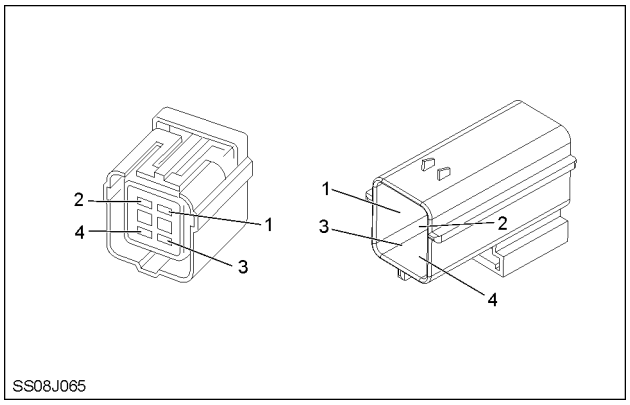

SS08J065 6

LEFT HAND REAR FENDER

https://tractormanualz.com/

X403 WORKLAMP C - PILLAR RIGHT AND LEFT

POS.	WIRE NUMBER	CIRCUIT REFERENCE
2	998 (G)	WORK LAMP-REAR FEED (INNER)
4	57AP (B)	EARTH (ALL)

NOTE: *For the wiring color code refer to,* ***Wiring harness - Overview (A.30.A)****.*

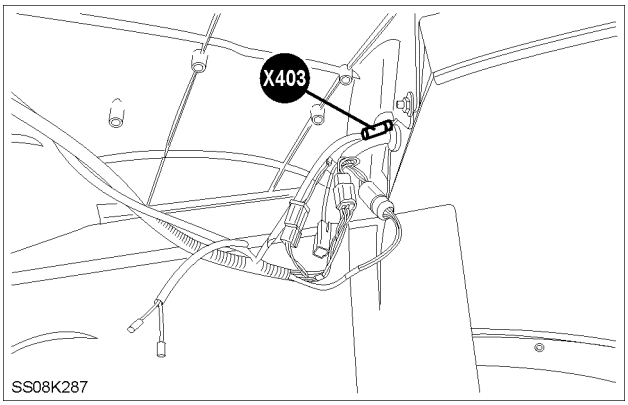

SS08K287 7

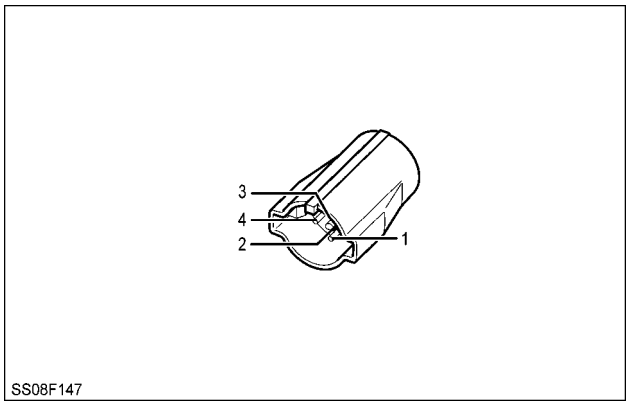

SS08F147 8

RIGHT HAND REAR FENDER

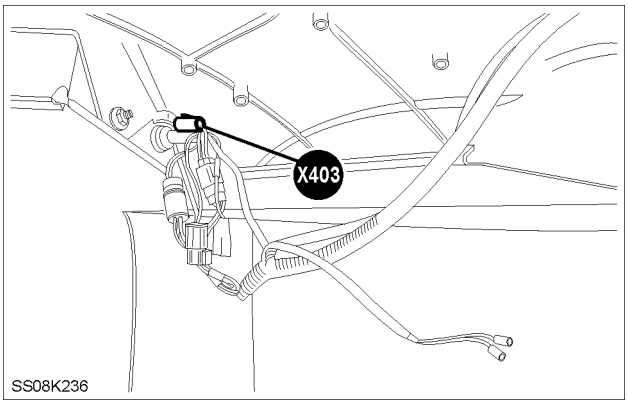

SS08K236 9

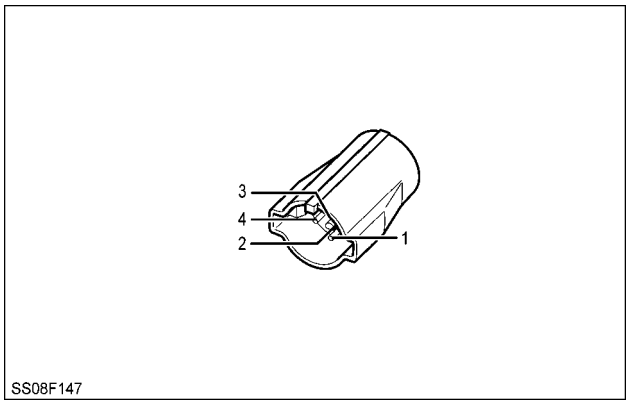

SS08F147 10

LEFT HAND REAR FENDER

https://tractormanualz.com/

X404 LICENSE LAMP RIGHT AND LEFT

POS.	WIRE NUMBER	CIRCUIT REFERENCE
1	1013B (R) / 1013 (R)	RIGHT HAND LAMPS

NOTE: *For the wiring color code refer to,* ***Wiring harness - Overview (A.30.A)****.*

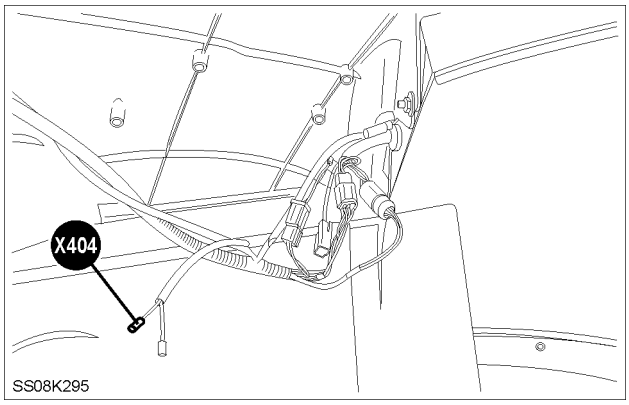

SS08K295 11

BRI4449C 12

RIGHT HAND REAR FENDER

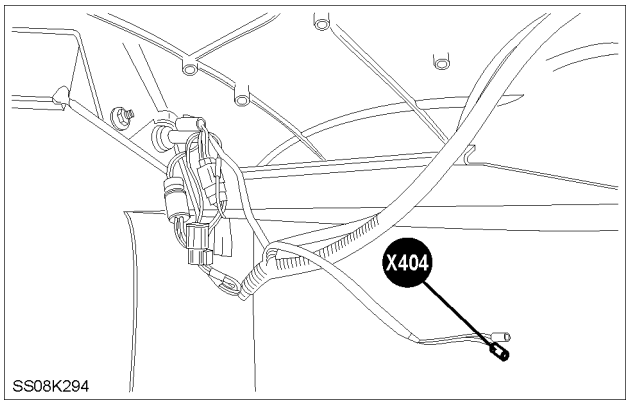

SS08K294 13

BRI4449C 14

LEFT HAND REAR FENDER

https://tractormanualz.com/

X405 LICENSE LAMP RIGHT AND LEFT

POS.	WIRE NUMBER	CIRCUIT REFERENCE
1	57AW (B) / 57 (B)	EARTH (ALL)

NOTE: *For the wiring color code refer to,* ***Wiring harness - Overview (A.30.A)****.*

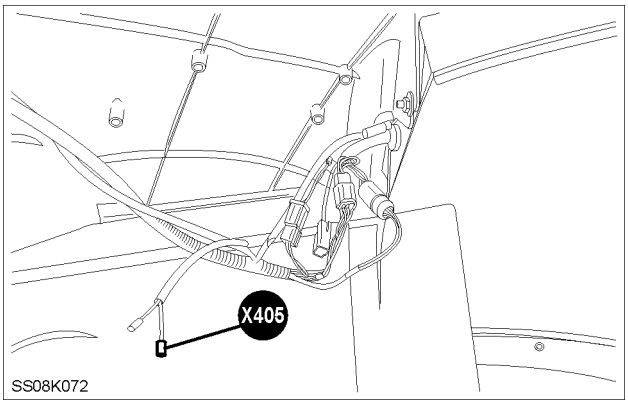

SS08K072 15

BRI4449C 16

RIGHT HAND REAR FENDER

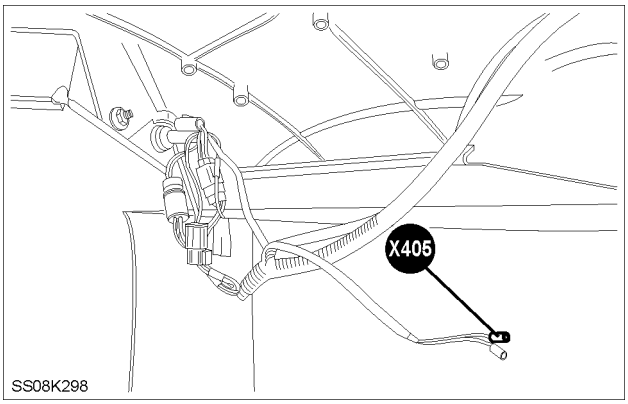

SS08K298 17

BRI4449C 18

LEFT HAND REAR FENDER

https://tractormanualz.com/

X406 REAR PTO SWITCH RIGHT AND LEFT

POS.	WIRE NUMBER	CIRCUIT REFERENCE
1	2050 (G)	PTO SUPPLY / DOG SUPPLY
2	2059 (W)	FENDER PTO SWITCH INPUT
3	2056 (W)	PTO FENDER PTO SWITCH ON

NOTE: *For the wiring color code refer to,* ***Wiring harness - Overview (A.30.A)****.*

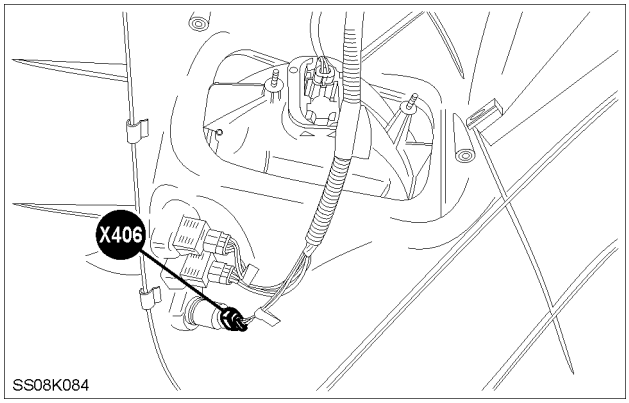

SS08K084 19

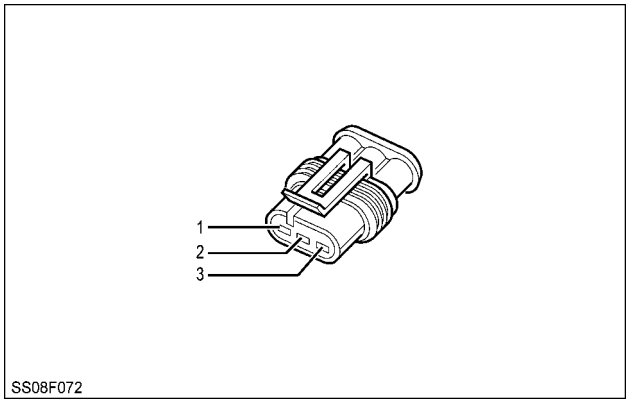

SS08F072 20

RIGHT HAND REAR FENDER

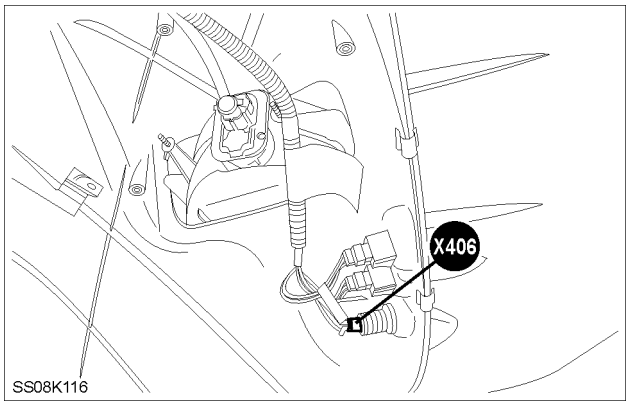

SS08K116 21

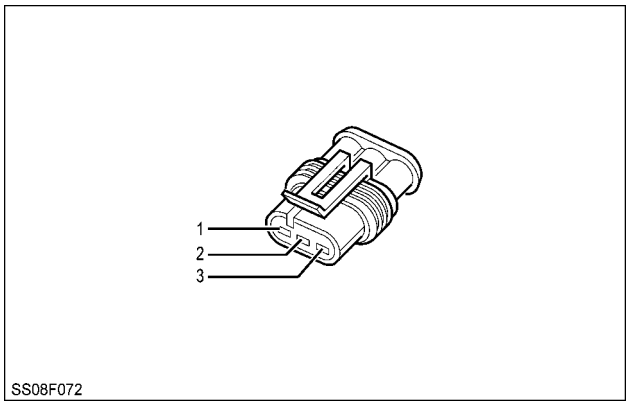

SS08F072 22

LEFT HAND REAR FENDER

https://tractormanualz.com/

X407 HPL SWITCH RIGHT AND LEFT

POS.	WIRE NUMBER	CIRCUIT REFERENCE
1	5100 (K)	EDC EXTERNAL SWITCH UP
2	5200AP (N)	EDC VALVE SUPPLY
3	5095 (K)	EDC EXTERNAL SWITCH DOWN

NOTE: *For the wiring color code refer to,* ***Wiring harness - Overview (A.30.A)****.*

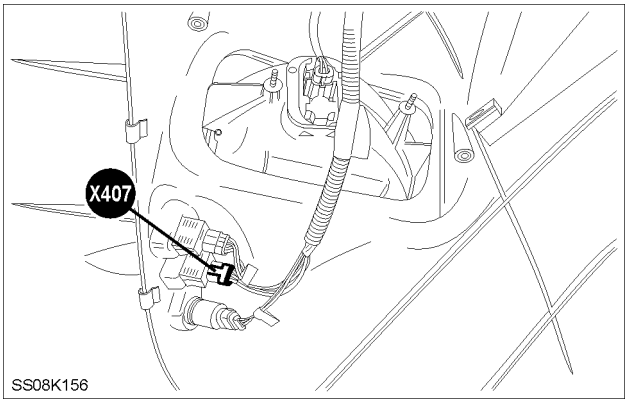

SS08K156 23

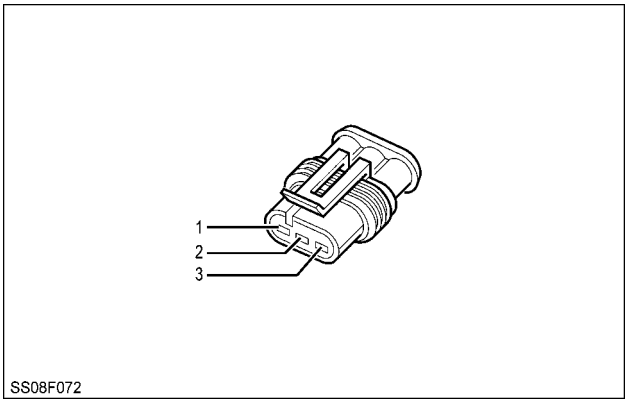

SS08F072 24

RIGHT HAND REAR FENDER

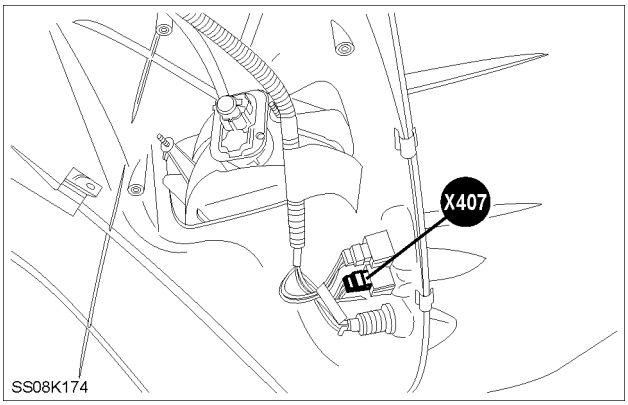

SS08K174 25

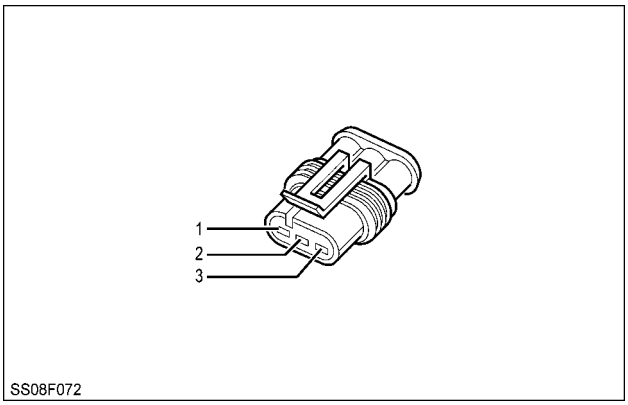

SS08F072 26

LEFT HAND REAR FENDER

https://tractormanualz.com/

X408 REAR FENDER 3RD REMOTE RIGHT

POS.	WIRE NUMBER	CIRCUIT REFERENCE
3	5574A (L) / 5574 (L)	FENDER 3RD EHR SWITCH – UP
4	5576A (L) / 5576 (L)	FENDER 3RD EHR SWITCH – DOWN

NOTE: *For the wiring color code refer to,* ***Wiring harness - Overview (A.30.A)****.*

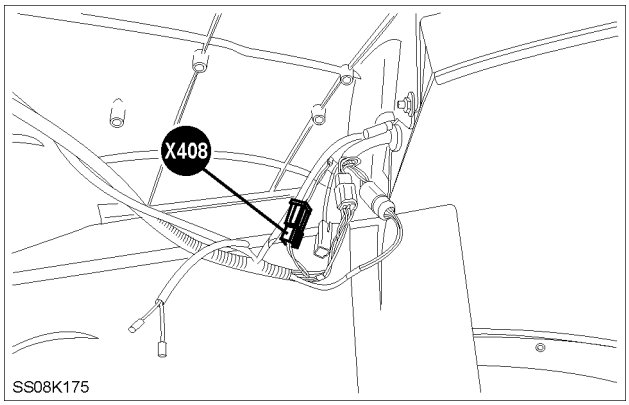

SS08K175 27

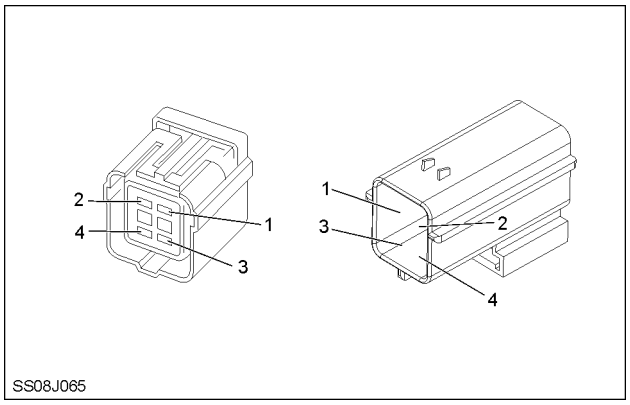

SS08J065 28

RIGHT HAND REAR FENDER

https://tractormanualz.com/

X409 STOP TAIL LIGHT RIGHT AND LEFT

POS.	WIRE NUMBER	CIRCUIT REFERENCE
1	57AX (B)	EARTH (ALL)
2	3004 (G)	RIGHT HAND TURN SIGNAL WARNING LAMP
3	1013A (R)	RIGHT HAND LAMPS
4	810 (G)	STOPLAMPS

NOTE: *For the wiring color code refer to,* ***Wiring harness - Overview (A.30.A)****.*

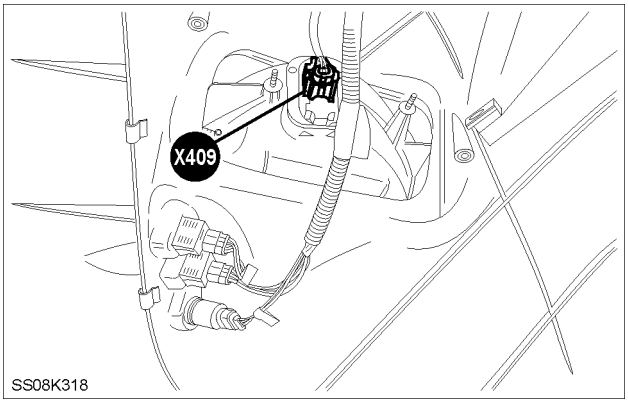

SS08K318 29

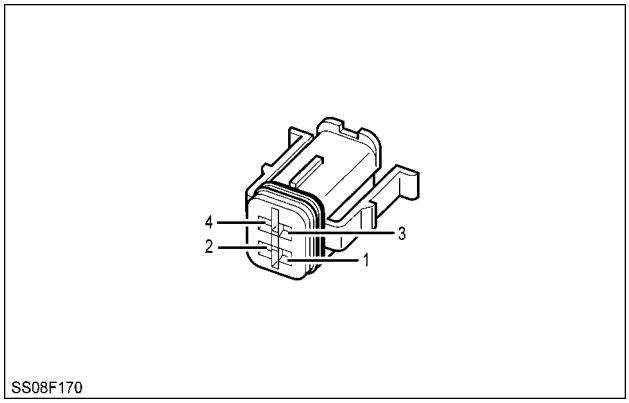

SS08F170 30

RIGHT HAND REAR FENDER

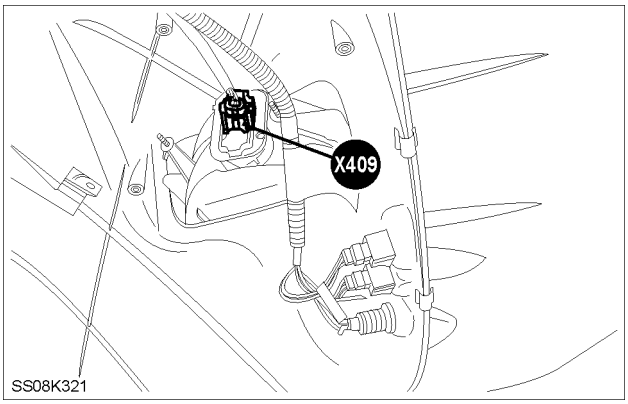

SS08K321 31

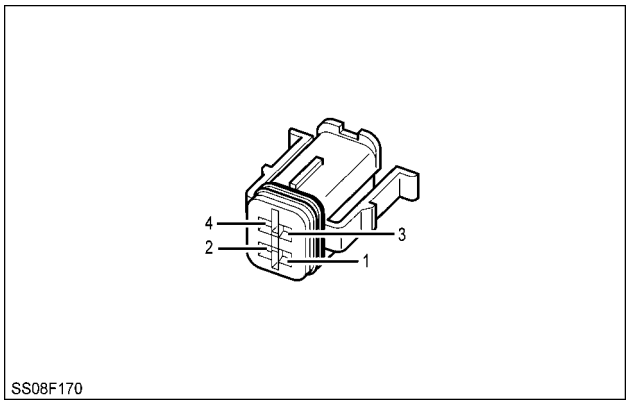

SS08F170 32

LEFT HAND REAR FENDER

https://tractormanualz.com/

Connector - Component diagram 42

X422 LOW BRAKE PRESSURE LINE SWITCH 1

POS.	WIRE NUMBER	CIRCUIT REFERENCE
1	8020A (TN)	TRAILER BRAKE PRESSURE

NOTE: *For the wiring color code refer to,* ***Wiring harness - Overview (A.30.A)****.*

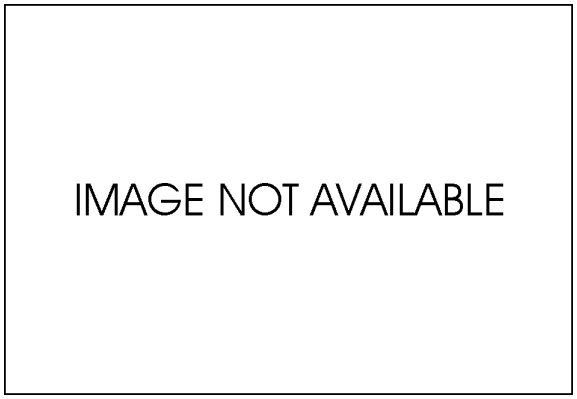

INA 1

BRI4490C 2

REAR RIGHT HAND AXLE

X423 LOW BRAKE PRESSURE LINE SWITCH 2

POS.	WIRE NUMBER	CIRCUIT REFERENCE
1	57FA (B)	EARTH (ALL)

NOTE: *For the wiring color code refer to,* ***Wiring harness - Overview (A.30.A)****.*

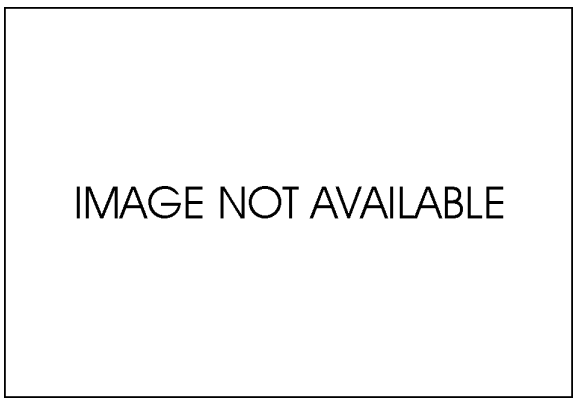

INA 3

BRI4490C 4

REAR RIGHT HAND AXLE

https://tractormanualz.com/

X424 HYDRAULIC TRAILER BRAKE SOLENOID 1

POS.	WIRE NUMBER	CIRCUIT REFERENCE
1	8000B (N)	TRAILER BRAKE SOLENOID

NOTE: *For the wiring color code refer to,* ***Wiring harness - Overview (A.30.A)****.*

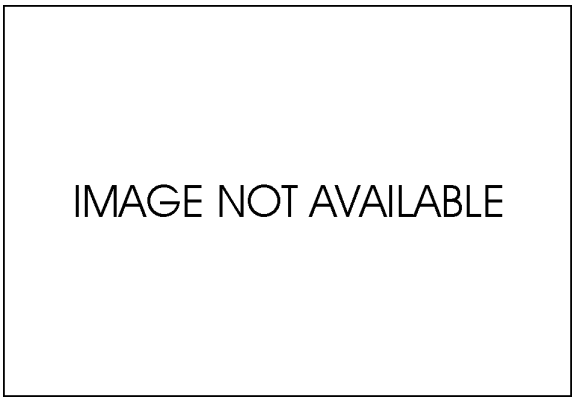

INA 5

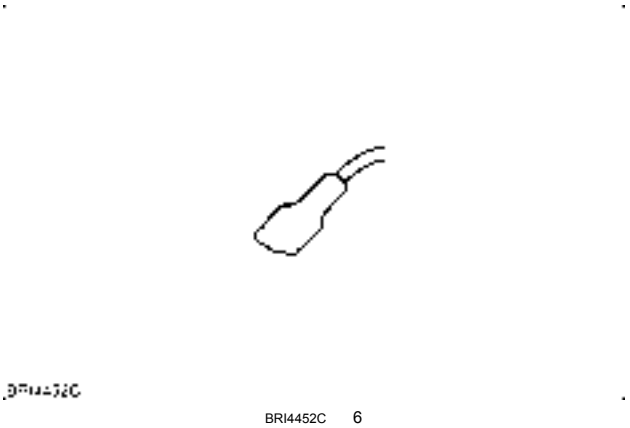

BRI4452C 6

REAR RIGHT HAND AXLE

X425 HYDRAULIC TRAILER BRAKE SOLENOID 2

POS.	WIRE NUMBER	CIRCUIT REFERENCE
1	8000C (N)	TRAILER BRAKE SOLENOID

NOTE: *For the wiring color code refer to,* ***Wiring harness - Overview (A.30.A)****.*

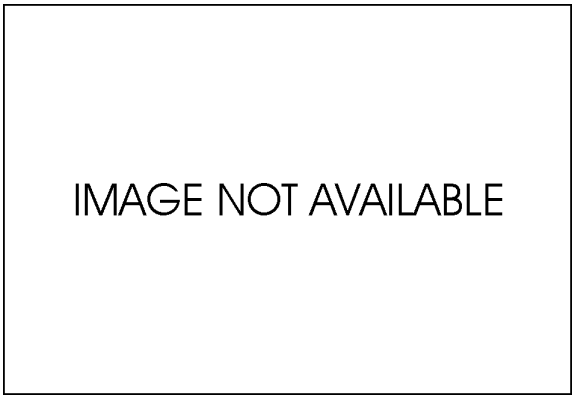

INA 7

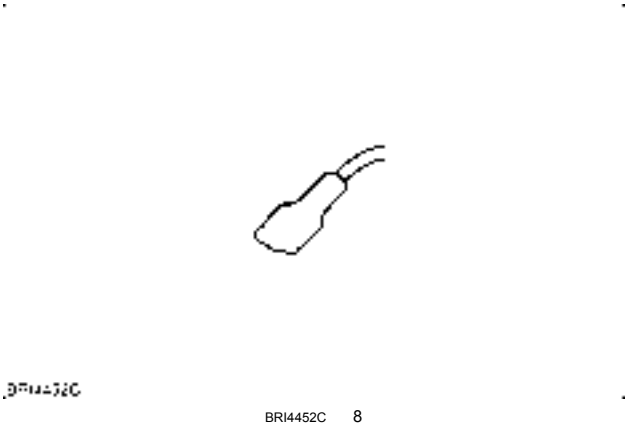

BRI4452C 8

REAR RIGHT HAND AXLE

https://tractormanualz.com/

X426 LOW PUMP OUTPUT PRESS SWITCH 1

POS.	WIRE NUMBER	CIRCUIT REFERENCE
1	8010A (TN)	TRAILER BRAKE PRESSURE

NOTE: *For the wiring color code refer to,* ***Wiring harness - Overview (A.30.A)****.*

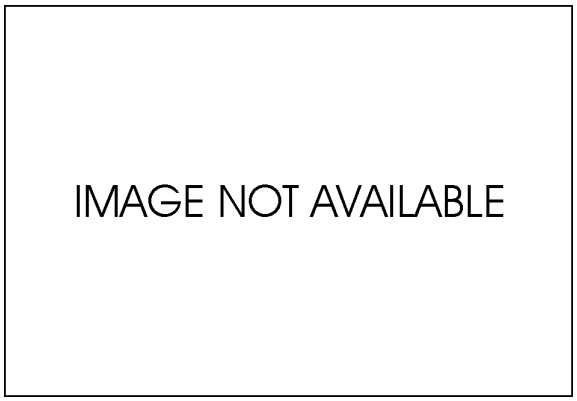

INA 9

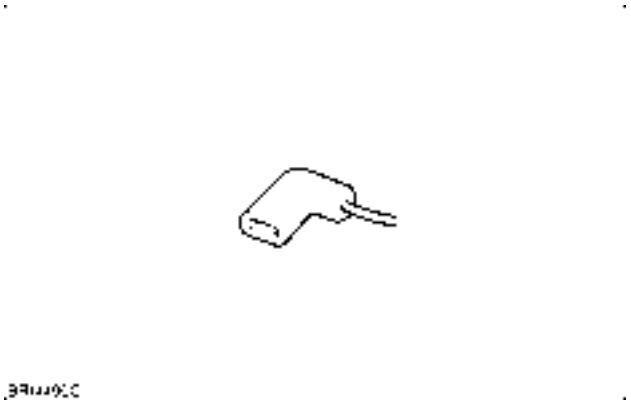

BRI4490C 10

REAR RIGHT HAND AXLE

X427 LOW PUMP OUTPUT PRESS SWITCH 2

POS.	WIRE NUMBER	CIRCUIT REFERENCE
1	8060E (U)	TRAILER BRAKE SUPPLY

NOTE: *For the wiring color code refer to,* ***Wiring harness - Overview (A.30.A)****.*

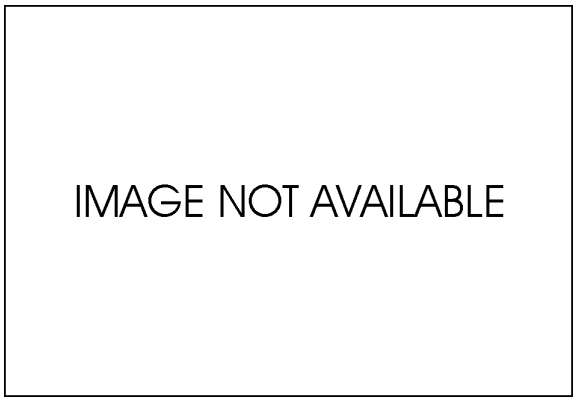

INA 11

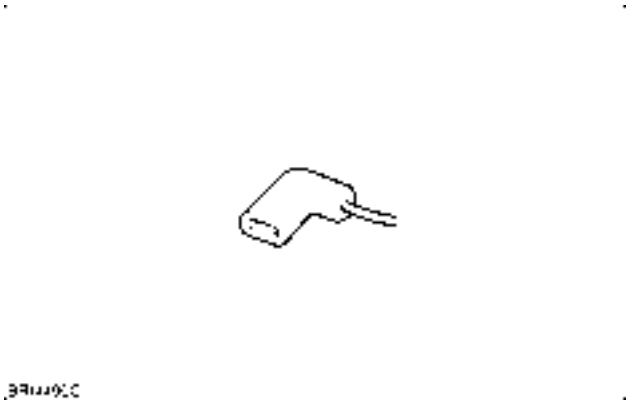

BRI4490C 12

REAR RIGHT HAND AXLE

https://tractormanualz.com/

X429 BRAKE DE-ICER

POS.	WIRE NUMBER	CIRCUIT REFERENCE
1	8060F (U)	TRAILER BRAKE SUPPLY
2	57FN (B)	EARTH (ALL)

NOTE: *For the wiring color code refer to,* ***Wiring harness - Overview (A.30.A)****.*

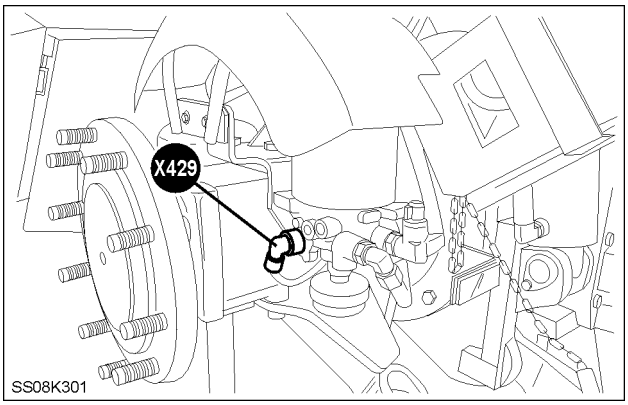

SS08K301 13

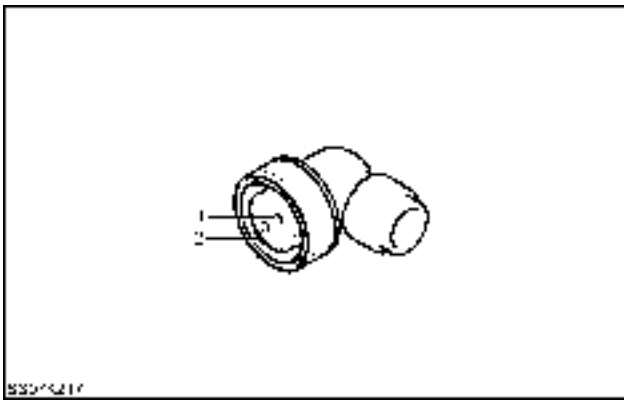

SS07K217 14

REAR LEFT HAND TRANSMISSION

https://tractormanualz.com/

Connector - Component diagram 43

X430 AIR BRAKE PRESSURE SENSOR

POS.	WIRE NUMBER	CIRCUIT REFERENCE
1	8010 (TN)	TRAILER BRAKE PRESSURE
2	8020B (TN)	TRAILER BRAKE PRESSURE
3	2095D (G)	INSTRUMENT SIGNAL GROUND

NOTE: *For the wiring color code refer to,* ***Wiring harness - Overview (A.30.A)****.*

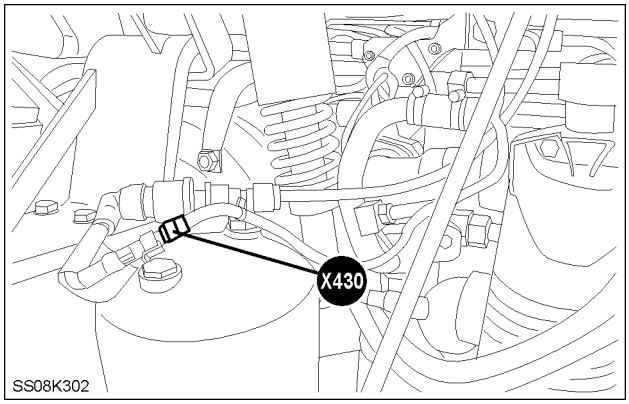

SS08K302 1

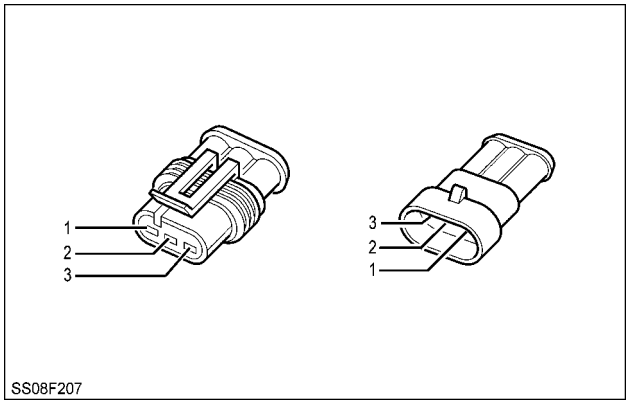

SS08F207 2

REAR RIGHT HAND TRANSMISSION

X431 PNEUMATIC TRAILER BRAKE SOLENOID

POS.	WIRE NUMBER	CIRCUIT REFERENCE
1	8000X (N)	TRAILER BRAKE SOLENOID
2	57EK (B)	EARTH (ALL)

NOTE: *For the wiring color code refer to,* ***Wiring harness - Overview (A.30.A)****.*

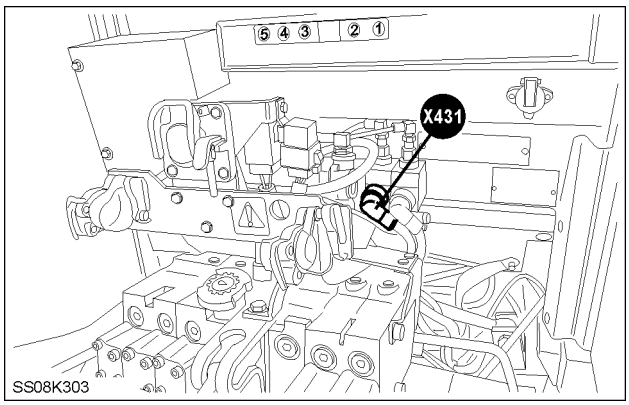

SS08K303 3

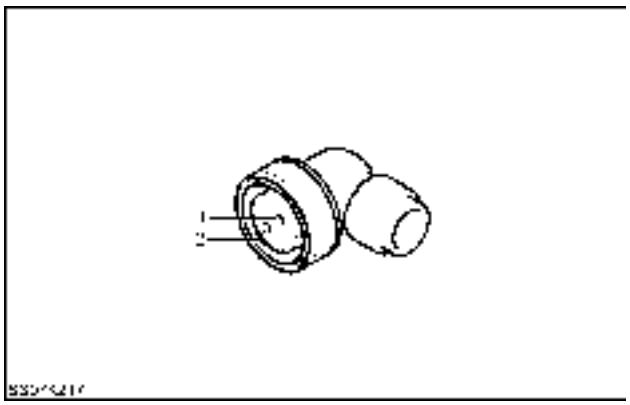

SS07K217 4

REAR OF TRACTOR

https://tractormanualz.com/

X432 PARK BRAKE SOLENOID

POS.	WIRE NUMBER	CIRCUIT REFERENCE
1	8070 (L)	TRAILER PARK BRAKE SOLENOID
2	57EL (B)	EARTH (ALL)

NOTE: *For the wiring color code refer to,* ***Wiring harness - Overview (A.30.A)****.*

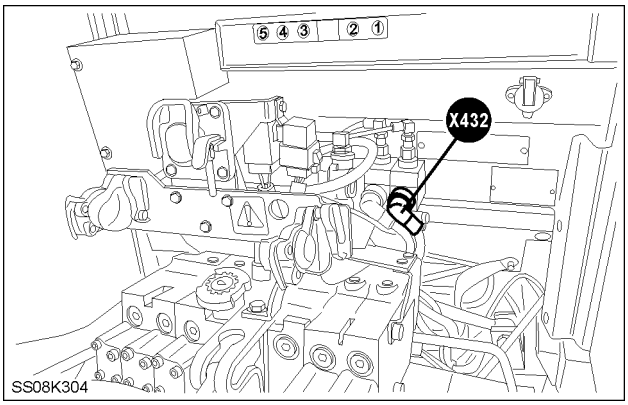

SS08K304 5

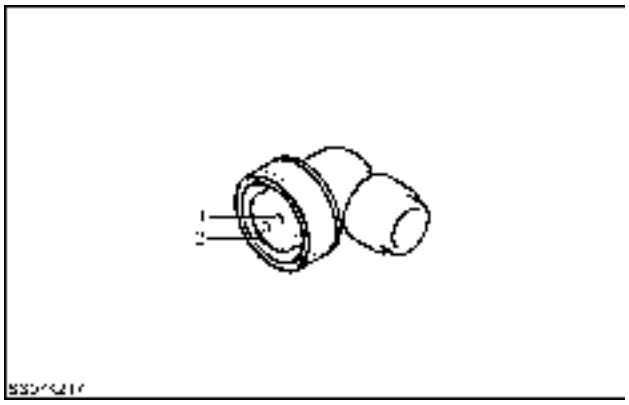

SS07K217 6

REAR OF TRACTOR

X434 HAZARD SWITCH

POS.	WIRE NUMBER	CIRCUIT REFERENCE
2	1021 (P)	HAZARD SWITCH SUPPLY (BATTERY)
3	1020A (G/W)	HAZARD SWITCH SUPPLY
7	57BF (B)	EARTH (ALL)
8	1020 (G/S)	HAZARD SWITCH SUPPLY

NOTE: *For the wiring color code refer to,* ***Wiring harness - Overview (A.30.A)****.*

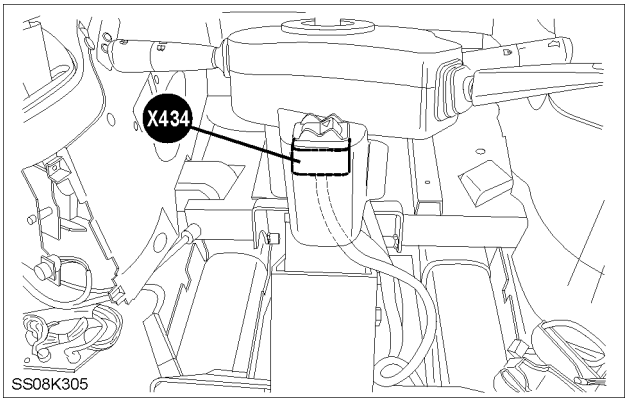

SS08K305 7

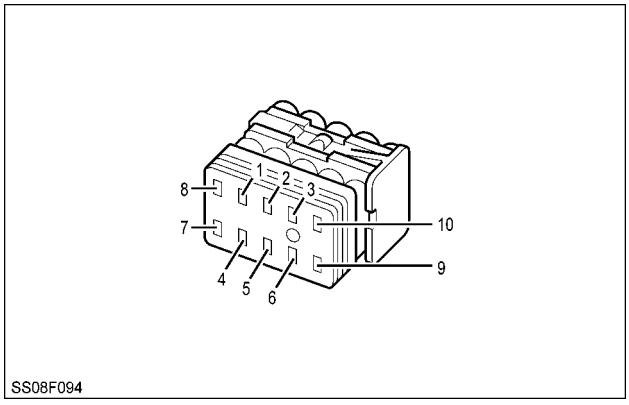

SS08F094 8

FRONT INSIDE CAB

https://tractormanualz.com/

Connector - Component diagram 44

X441 STUD 8 AMPERE PLUS

POS.	WIRE NUMBER	CIRCUIT REFERENCE
1	3070 (P/W)	'B' PILLAR SKT SUPPLY

NOTE: *For the wiring color code refer to,* ***Wiring harness - Overview (A.30.A)****.*

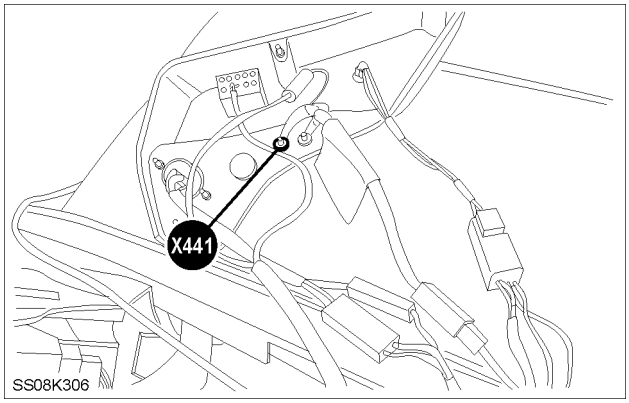

SS08K306 1

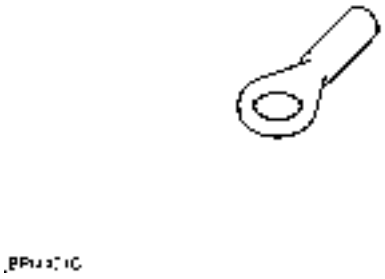

BRI4401C 2

BEHIND RIGHT HAND SWITCH PANEL

X442 STUD 8 AMPERE MINUS

POS.	WIRE NUMBER	CIRCUIT REFERENCE
1	57 (B)	EARTH (ALL)

NOTE: *For the wiring color code refer to,* ***Wiring harness - Overview (A.30.A)****.*

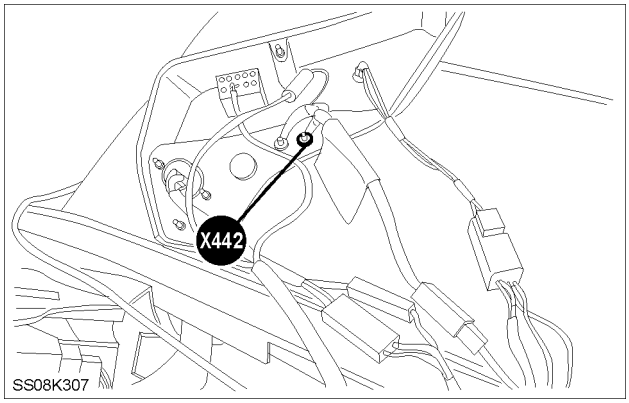

SS08K307 3

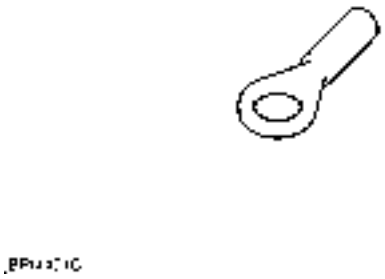

BRI4401C 4

BEHIND RIGHT HAND SWITCH PANEL

https://tractormanualz.com/

Connector - Component diagram 45

X455 REV. ALARM H58

POS.	WIRE NUMBER	CIRCUIT REFERENCE
1	1P (R)	BATTERY SUPPLY

NOTE: *For the wiring color code refer to,* ***Wiring harness - Overview (A.30.A)****.*

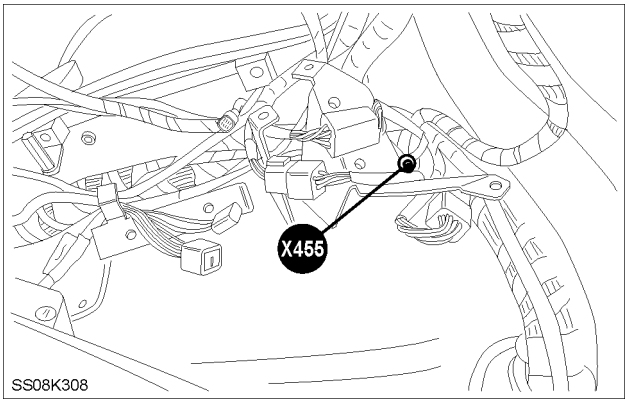

SS08K308 1

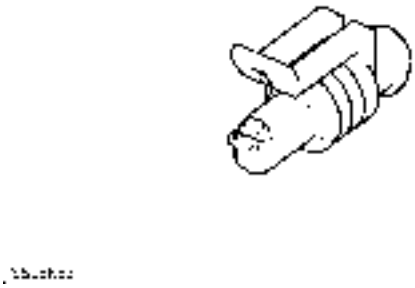

SS08K527 2

BEHIND RIGHT HAND TRIM

https://tractormanualz.com/

Connector - Component diagram 46

X462 FUSE PF2 / C

POS.	WIRE NUMBER	CIRCUIT REFERENCE
C	160 (U)	BATTERY SUPPLY ELECTRONICS

NOTE: *For the wiring color code refer to,* ***Wiring harness - Overview (A.30.A)****.*

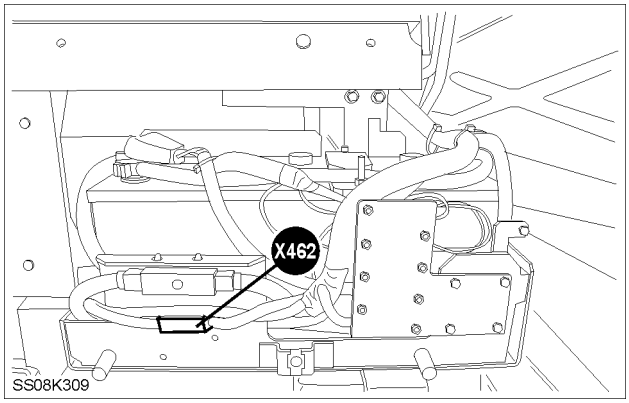

SS08K309 1

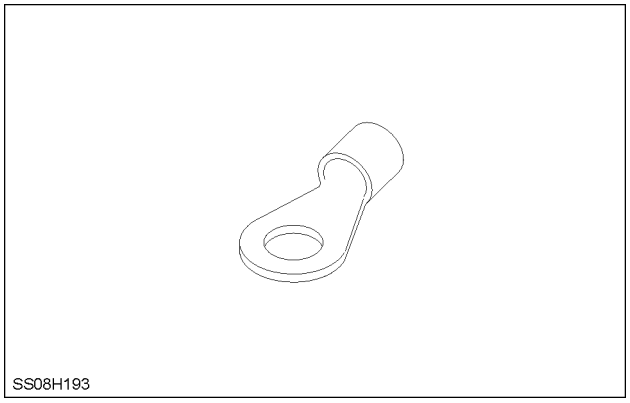

SS08H193 2

RIGHT HAND BEHIND STEPS

X463 FUSE PF1 / A

POS.	WIRE NUMBER	CIRCUIT REFERENCE
A	1 (R)	BATTERY SUPPLY

NOTE: *For the wiring color code refer to,* ***Wiring harness - Overview (A.30.A)****.*

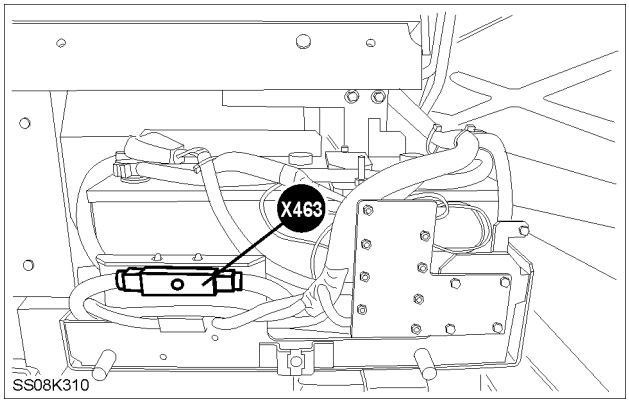

SS08K310 3

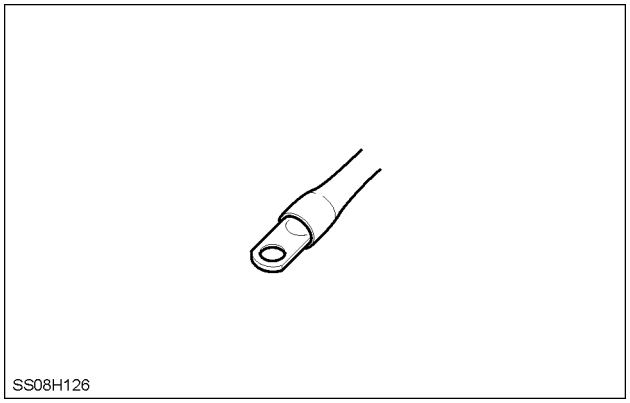

SS08H126 4

RIGHT HAND BEHIND STEPS

https://tractormanualz.com/

X464 FUSE PF2 / D

POS.	WIRE NUMBER	CIRCUIT REFERENCE
D	160A (U)	BATTERY SUPPLY ELECTRONICS

NOTE: *For the wiring color code refer to,* ***Wiring harness - Overview (A.30.A)****.*

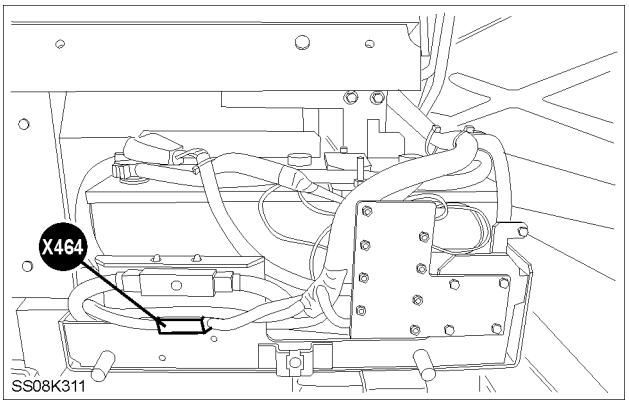

SS08K311 5

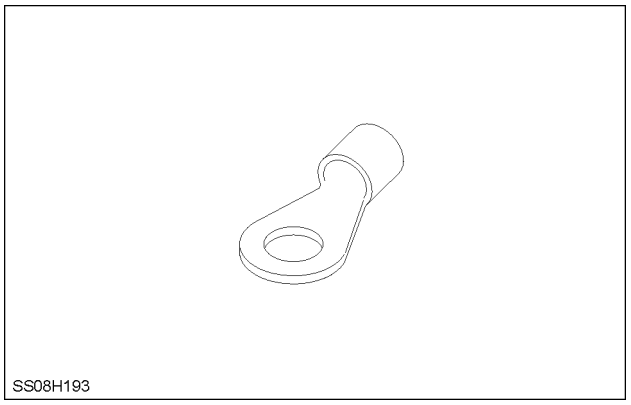

SS08H193 6

RIGHT HAND BEHIND STEPS

X465 FUSE PF1 / B

POS.	WIRE NUMBER	CIRCUIT REFERENCE
B	1A (R)	BATTERY SUPPLY

NOTE: *For the wiring color code refer to,* ***Wiring harness - Overview (A.30.A)****.*

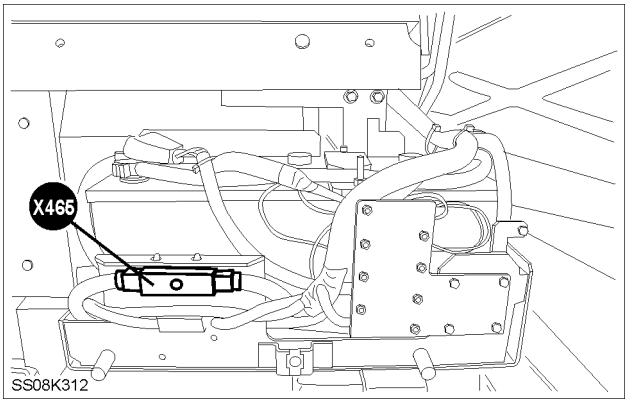

SS08K312 7

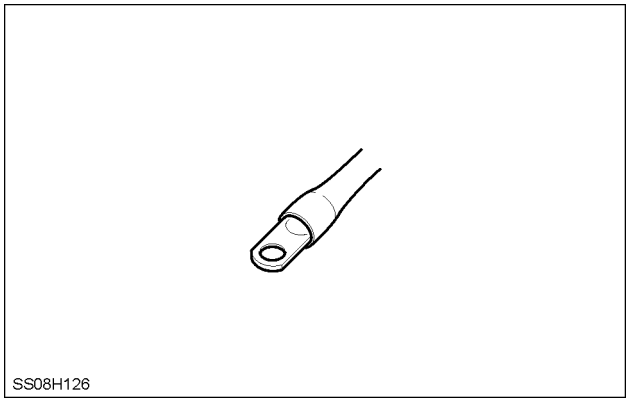

SS08H126 8

RIGHT HAND BEHIND STEPS

https://tractormanualz.com/

X466 BATTERY ISOLATOR

POS.	WIRE NUMBER	CIRCUIT REFERENCE
1	172A (W/TQ/Y)	BATTERY ISOLATOR RELAY COIL (OFF)
2	57NN (B)	EARTH (ALL)
3	57NP (B)	EARTH (ALL)
4	171B (W/TQ/B)	BATTERY ISOLATOR RELAY COIL

NOTE: *For the wiring color code refer to,* ***Wiring harness - Overview (A.30.A)****.*

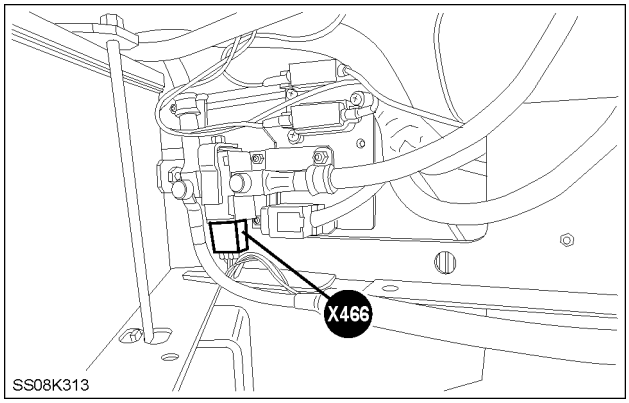

SS08K313 9

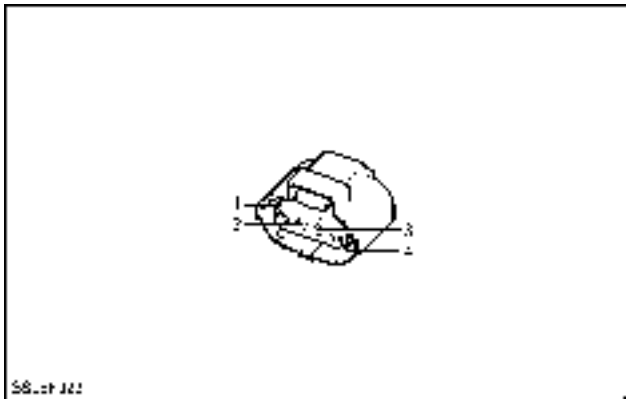

SS08F323 10

RIGHT HAND BEHIND STEPS

https://tractormanualz.com/

Connector - Component diagram 47

X473 LOW HYDRO CHARGE SWITCH

POS.	WIRE NUMBER	CIRCUIT REFERENCE
A	7160 (R)	HYD LOW CHARGE WARNING

NOTE: *For the wiring color code refer to,* ***Wiring harness - Overview (A.30.A)****.*

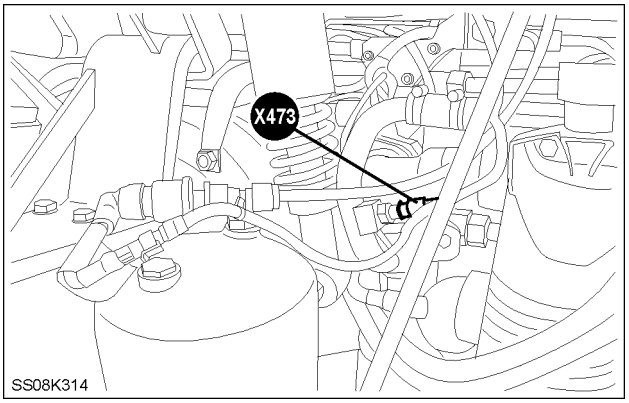

SS08K314 1

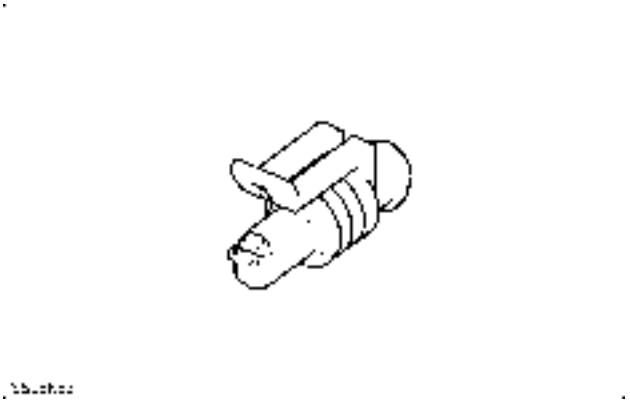

SS08K527 2

REAR RIGHT HAND TRANSMISSION

X474 HYDRAULIC FILTER BLOCKED (VACUUM SWITCH)

POS.	WIRE NUMBER	CIRCUIT REFERENCE
A	7130 (N)	HYD FILTER WNG LP
B	57EV (B)	EARTH (ALL)

NOTE: *For the wiring color code refer to,* ***Wiring harness - Overview (A.30.A)****.*

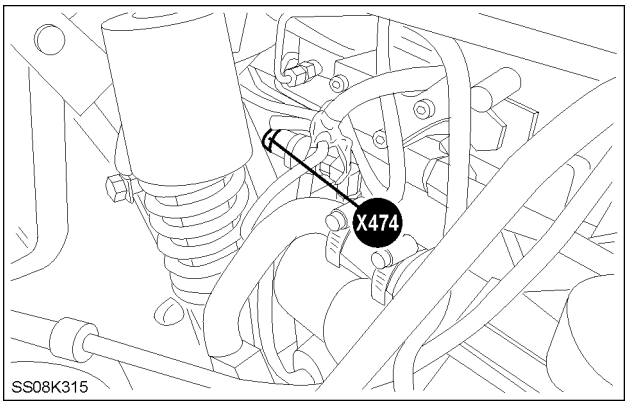

SS08K315 3

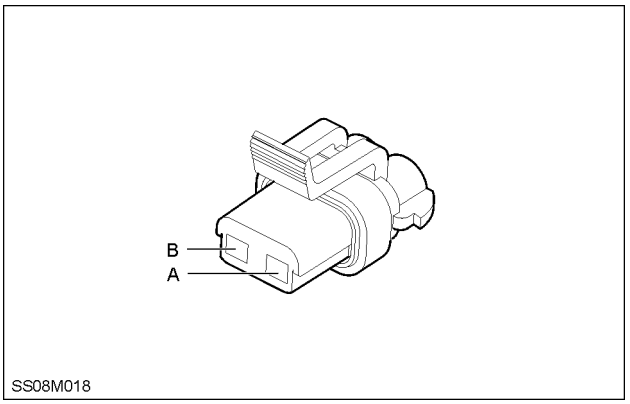

SS08M018 4

REAR RIGHT HAND TRANSMISSION

https://tractormanualz.com/

Connector - Component diagram 48

X482 BATTERY ISOLATOR CONTROL SWITCH

POS.	WIRE NUMBER	CIRCUIT REFERENCE
1	171 (W)	BATTERY ISOLATOR RELAY COIL
2	1J (R)	BATTERY SUPPLY
3	172 (W)	BATTERY ISOLATOR RELAY COIL (OFF)
7	10V (G)	IGNITION SUPPLY
8	666E (L)	DOMELAMP SWITCH FEED

NOTE: *For the wiring color code refer to,* ***Wiring harness - Overview (A.30.A)****.*

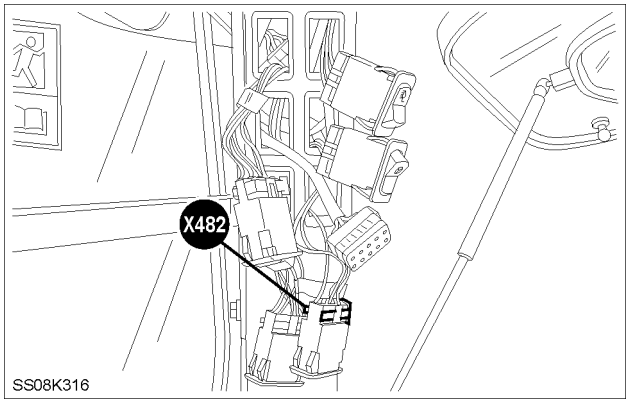

SS08K316 1

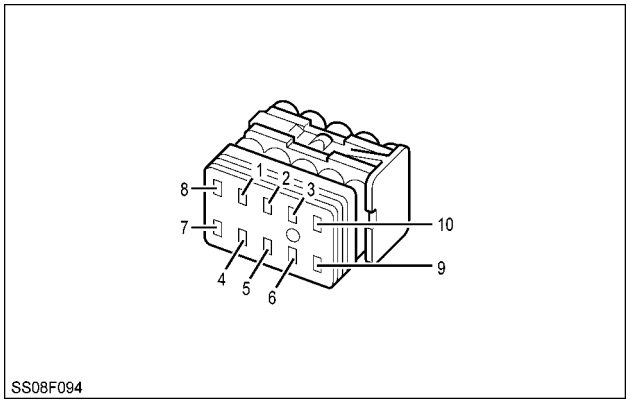

SS08F094 2

RIGHT HAND C-PILLAR

https://tractormanualz.com/

X485 COLOUR DISPLAY

POS.	WIRE NUMBER	CIRCUIT REFERENCE
1	5500J (R)	EHR CAN HIGH
2	5510J (U)	EHR CAN LOW
3	5945 (Y)	ROTARY ENCODER SIGNAL - "P1"
4	5950 (Y)	ROTARY ENCODER SIGNAL - "P2"
5	5900F (Y)	ISO BUS CAN SIGNAL LOW
6	5910F (G)	ISO BUS CAN SIGNAL HIGH
9	5960 (Y)	RS232 OUTPUT TECU
10	5955A (Y)	RS232 INPUT TECU
13	5000 (L)	EDC MEMORY POWER
14	57 (B)	EARTH (ALL)
15	7000AT (U)	TRANS CONTROL SUPPLY
17	5935 (Y)	ROTARY ENCODER SIGNAL - "HOME"
18	5940 (Y)	ROTARY ENCODER SIGNAL - "ESC"
19	5990 (Y)	ROTARY ENCODER SIGNAL - "ENTER"
20	5520 (LTG)	EHR 5V Ref
21	5962 (R)	USB + 5V Ref.
22	5966 (G)	USB Data +
23	5964 (W)	USB Data -
24	5968 (B)	USB Ground

NOTE: *For the wiring color code refer to,* ***Wiring harness - Overview (A.30.A)****.*

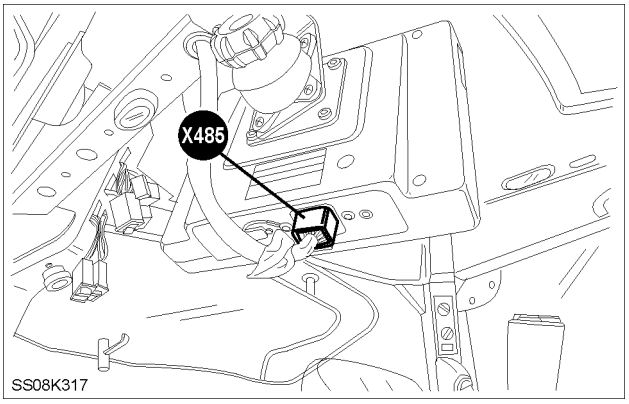

SS08K317 3

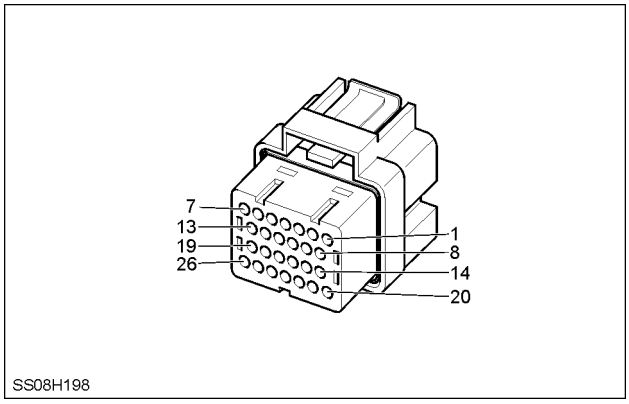

SS08H198 4

IN CAB RIGHT HAND

https://tractormanualz.com/

X489 REAR VIEW CAMERA

POS.	WIRE NUMBER	CIRCUIT REFERENCE
1	5520B (LTG)	EHR 5V Ref
2	57B (B)	EARTH (ALL)
3	5960A (Y)	RS232 OUTPUT TECU

NOTE: *For the wiring color code refer to,* ***Wiring harness - Overview (A.30.A)****.*

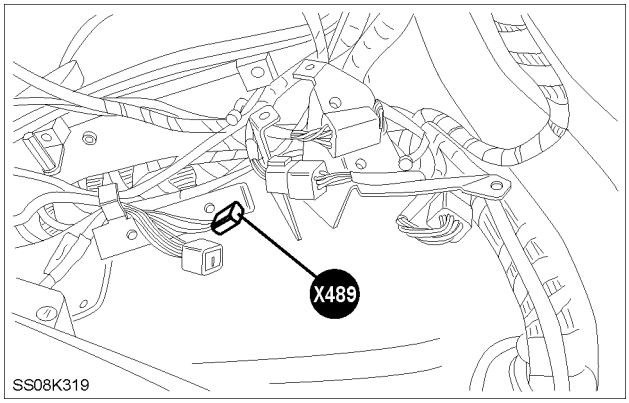

SS08K319 5

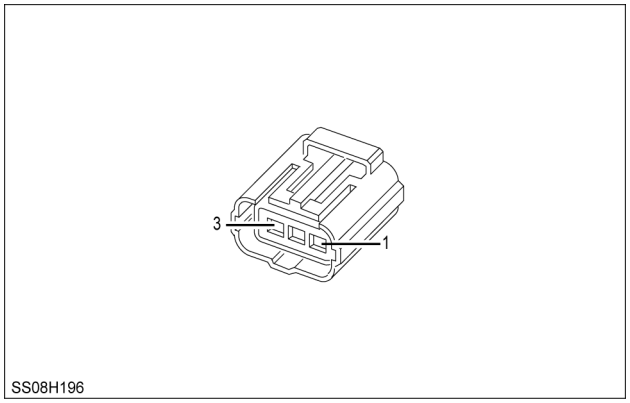

SS08H196 6

BEHIND RIGHT HAND TRIM

https://tractormanualz.com/

Connector - Component diagram 49

X490 ENCODER AND SWITCHES

POS.	WIRE NUMBER	CIRCUIT REFERENCE
1	5520 (LTG)	EHR 5V Ref
2	5935 (Y)	ROTARY ENCODER SIGNAL - "HOME"
3	5940 (Y)	ROTARY ENCODER SIGNAL - "ESC"
4	5945 (Y)	ROTARY ENCODER SIGNAL - "P1"
5	5950 (Y)	ROTARY ENCODER SIGNAL - "P2"
6	5990 (Y)	ROTARY ENCODER SIGNAL - "ENTER"
7	57 (B)	EARTH (ALL)
8	57D (B)	EARTH (ALL)
9	57E (B)	EARTH (ALL)
10	57F (B)	EARTH (ALL)

NOTE: *For the wiring color code refer to,* ***Wiring harness - Overview (A.30.A)****.*

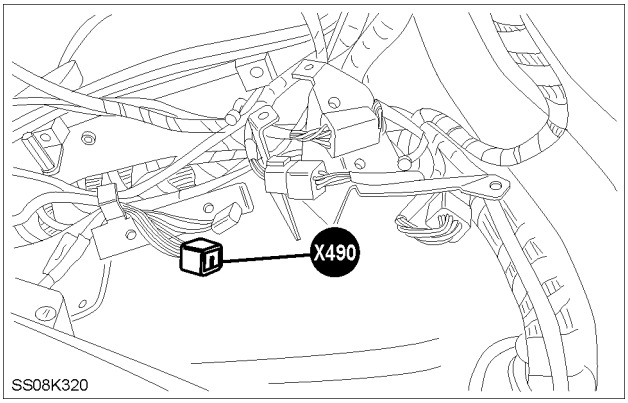

SS08K320 1

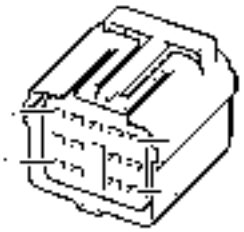

BRI4419B 2

BEHIND RIGHT HAND TRIM

https://tractormanualz.com/

Connector - Component diagram 50

X505 SUSPENSION RAISE SOLENOID

POS.	WIRE NUMBER	CIRCUIT REFERENCE
1	3260 (O)	LOWER SOLENOID PWR
2	3270 (O)	LOWER SOLENOID RET

NOTE: *For the wiring color code refer to,* ***Wiring harness - Overview (A.30.A)****.*

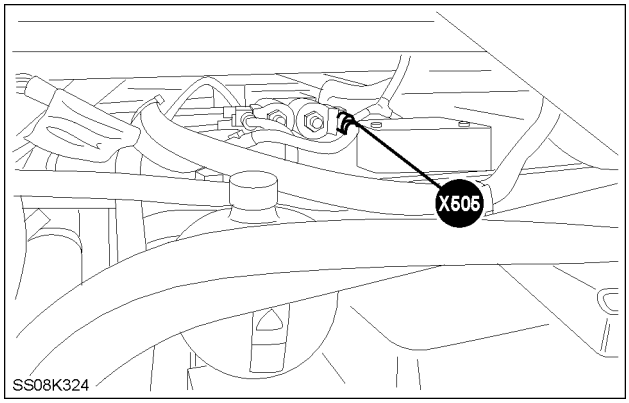

SS08K324 1

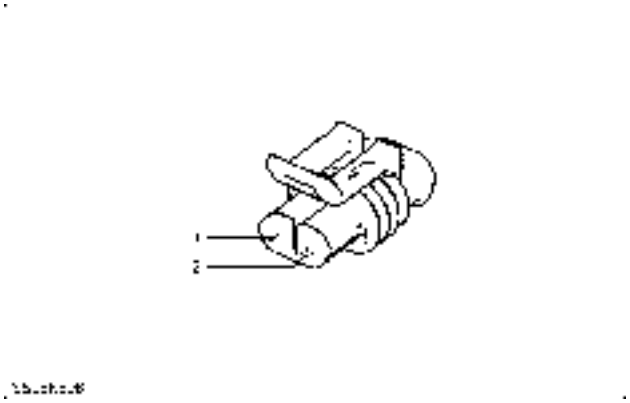

SS08K508 2

RIGHT HAND TOP OF TRANSMISSION

X506 SUSPENSION LOWER SOLENOID

POS.	WIRE NUMBER	CIRCUIT REFERENCE
1	3240 (O)	RAISE SOLENOID PWR
2	3250 (O)	RAISE SOLENOID RET

NOTE: *For the wiring color code refer to,* ***Wiring harness - Overview (A.30.A)****.*

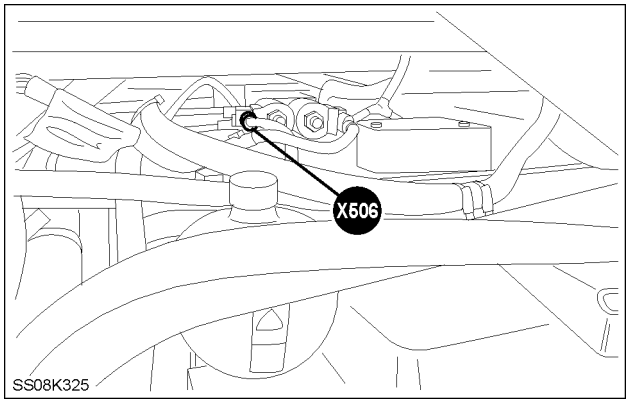

SS08K325 3

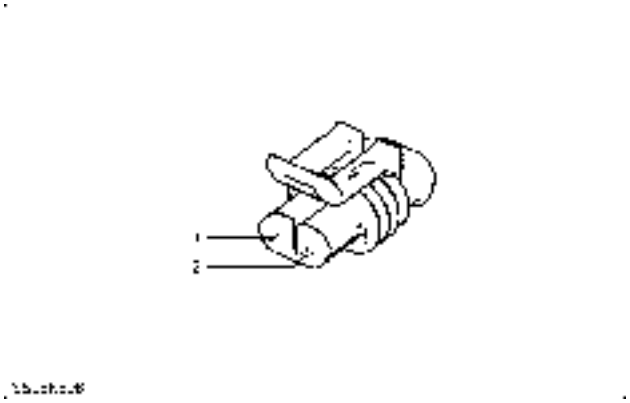

SS08K508 4

RIGHT HAND TOP OF TRANSMISSION

https://tractormanualz.com/

X507 UPPER LOCKOUT SOLENOID

POS.	WIRE NUMBER	CIRCUIT REFERENCE
1	3280 (O)	SUSPENSION LOCKOUT SOLENOID UPPER
2	3281 (TN)	SUSPENSION LOCKOUT SOLENOID UPPER RETURN (-)

NOTE: *For the wiring color code refer to,* ***Wiring harness - Overview (A.30.A)****.*

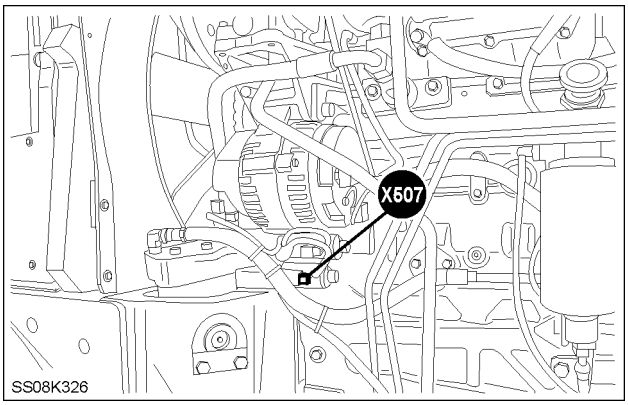

SS08K326 5

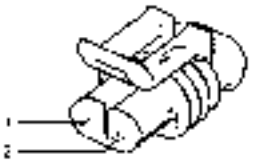

SS08K508 6

FRONT LEFT HAND ENGINE

X508 LOWER LOCKOUT SOLENOID

POS.	WIRE NUMBER	CIRCUIT REFERENCE
1	3285 (TN)	SUSPENSION LOCKOUT SOLENOID LOWER
2	3286 (TN)	SUSPENSION LOCKOUT SOLENOID LOWER RETURN (-)

NOTE: *For the wiring color code refer to,* ***Wiring harness - Overview (A.30.A)****.*

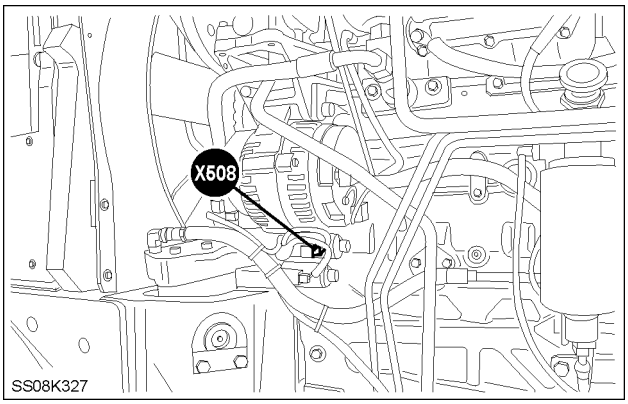

SS08K327 7

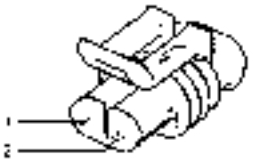

SS08K508 8

FRONT LEFT HAND ENGINE

https://tractormanualz.com/

X509 FRONT SUSPENSION NOT PRESSURE

POS.	WIRE NUMBER	CIRCUIT REFERENCE
1	3290 (O)	SUSPENSION LOCKOUT LAMP (OR SOLENOID RET)
1	57FK (B)	EARTH (ALL)

NOTE: *For the wiring color code refer to,* ***Wiring harness - Overview (A.30.A)****.*

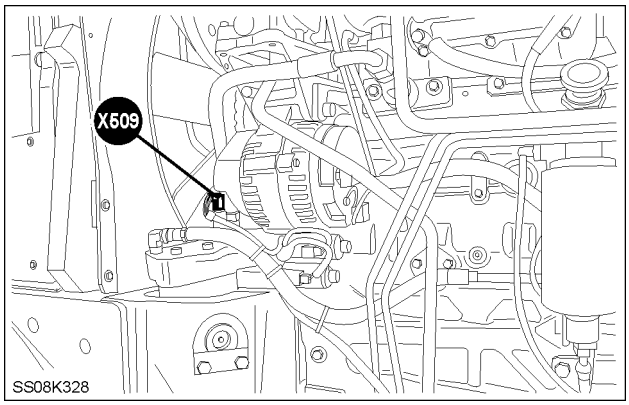

SS08K328 9

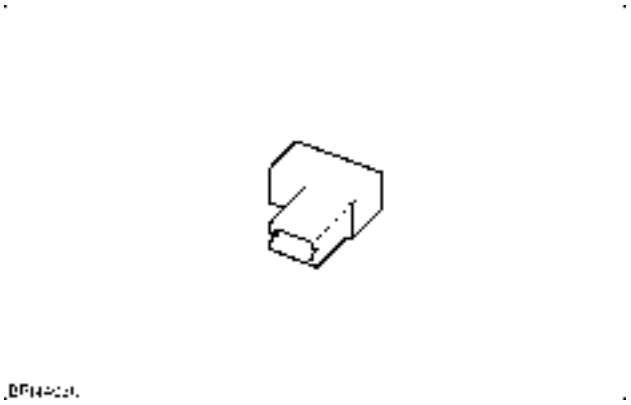

BRI4403C 10

FRONT LEFT HAND ENGINE

https://tractormanualz.com/

Connector - Component diagram 52

X524 OUTPUT WHEEL SPEED SENSOR

POS.	WIRE NUMBER	CIRCUIT REFERENCE
1	7411 (Y)	TRANS HYDROSTAT INPUT SPEED SENSOR (CVT)
2	7000BK (U)	TRANS CONTROL SUPPLY

NOTE: *For the wiring color code refer to,* ***Wiring harness - Overview (A.30.A)****.*

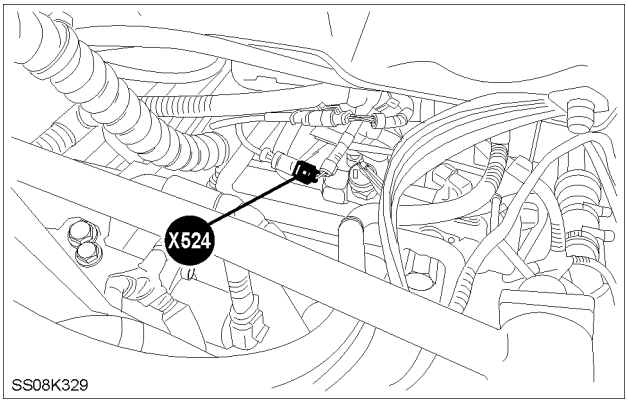

SS08K329 1

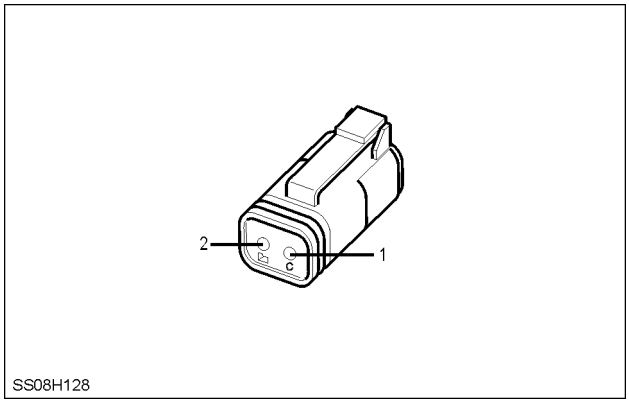

SS08H128 2

REAR OF TRACTOR UNDERNEATH CAB

X525 HYDROSTAT INPUT SPEED SENSOR

POS.	WIRE NUMBER	CIRCUIT REFERENCE
1	7000BP (U)	TRANS CONTROL SUPPLY
2	7401 (L)	TRANS RPM SPEED SENSOR
3	60BJ (B/W)	SENSOR GROUND

NOTE: *For the wiring color code refer to,* ***Wiring harness - Overview (A.30.A)****.*

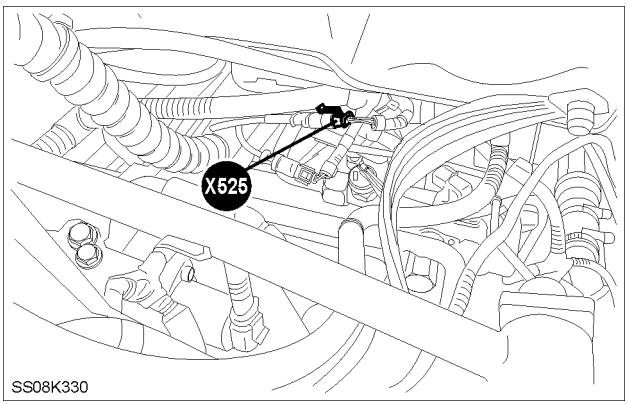

SS08K330 3

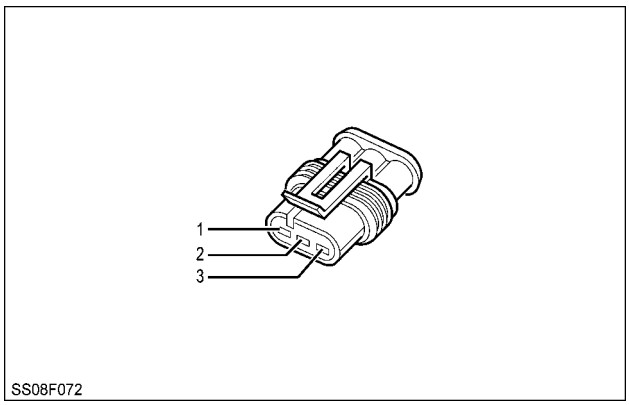

SS08F072 4

REAR OF TRACTOR UNDERNEATH CAB

https://tractormanualz.com/

X526 RING SPEED SENSOR

POS.	WIRE NUMBER	CIRCUIT REFERENCE
1	7400 (Y)	TRANS RPM SPEED SENSOR TO TCM INPUT
2	7000BL (U)	TRANS CONTROL SUPPLY

NOTE: *For the wiring color code refer to,* ***Wiring harness - Overview (A.30.A)****.*

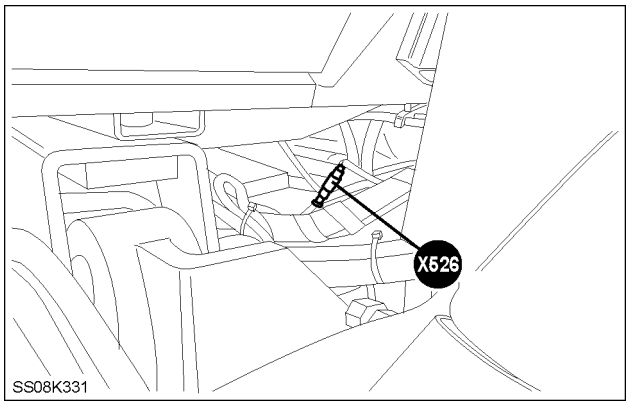

SS08K331 5

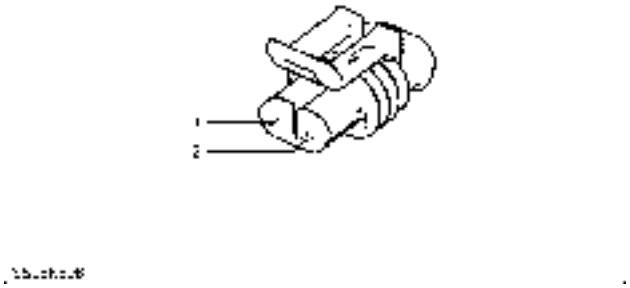

SS08K508 6

RIGHT HAND TOP OF TRANSMISSION

X527 CLUTCH SOLENOID A

POS.	WIRE NUMBER	CIRCUIT REFERENCE
1	7910 (TQ)	CLUTCH 'B' SIGNAL
2	7915 (L)	TCM CLUTCH B RETURN

NOTE: *For the wiring color code refer to,* ***Wiring harness - Overview (A.30.A)****.*

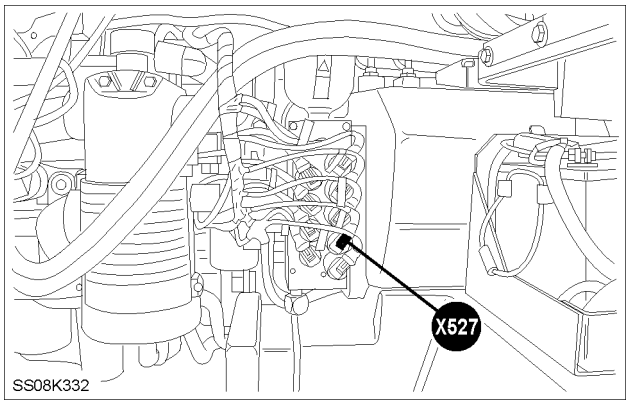

SS08K332 7

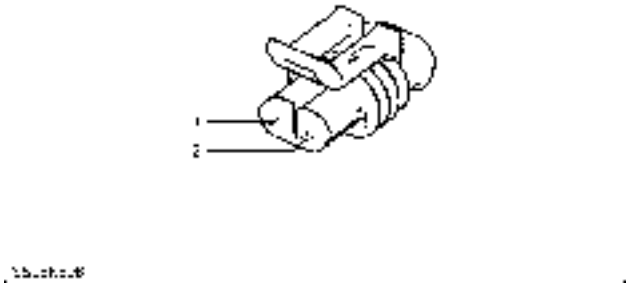

SS08K508 8

RIGHT HAND TRANSMISSION

https://tractormanualz.com/

X528 CLUTCH SOLENOID B

POS.	WIRE NUMBER	CIRCUIT REFERENCE
1	7431 (TQ)	SUPPLY
2	7900 (TQ)	CLUTCH 'A' SIGNAL

NOTE: *For the wiring color code refer to,* ***Wiring harness - Overview (A.30.A)****.*

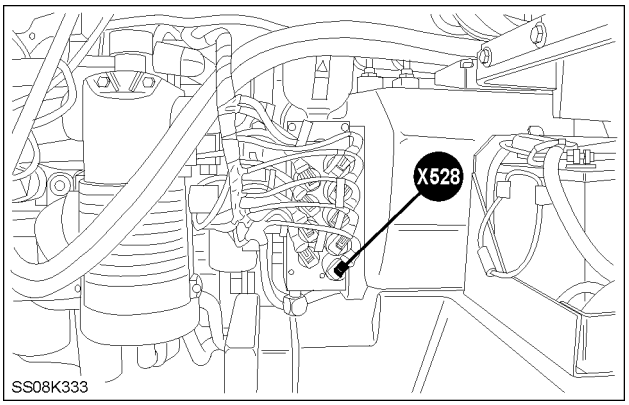

SS08K333 9

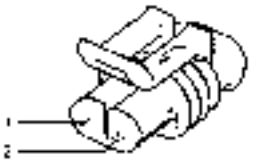

SS08K508 10

RIGHT HAND TRANSMISSION

https://tractormanualz.com/

Connector - Component diagram 53

X532 POTENTIOMETER SYNCHRONISER F1 - F3

POS.	WIRE NUMBER	CIRCUIT REFERENCE
1	7960 (W)	TRANS SLOW/FAST
2	5020R (TN)	EDC PROC +5V REF VOLTAGE DROP POSN/RATE
3	60BN (B/W)	SENSOR GROUND

NOTE: *For the wiring color code refer to,* ***Wiring harness - Overview (A.30.A)****.*

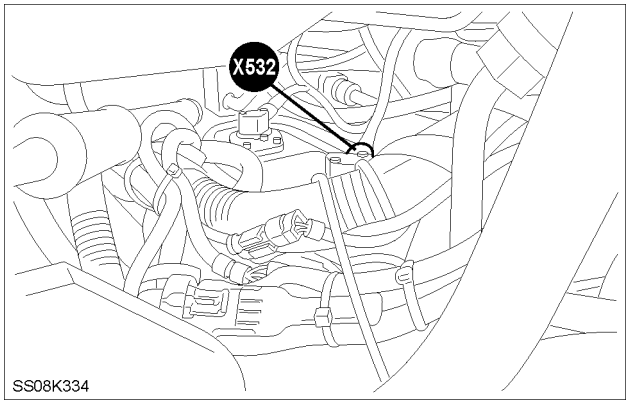

SS08K334 1

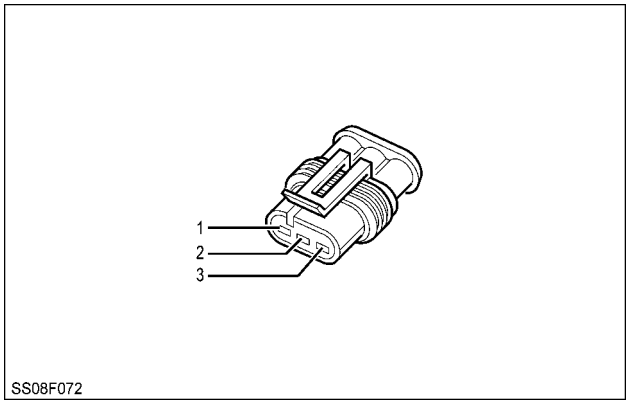

SS08F072 2

RIGHT HAND TOP OF TRANSMISSION

X533 POTENTIOMETER SYNCHRONISER F2 - R1

POS.	WIRE NUMBER	CIRCUIT REFERENCE
1	7584 (R)	PARKLOCK SENSOR SWITCH SIGNAL
2	5020N (TN)	EDC PROC +5V REF VOLTAGE DROP POSN/RATE
3	60BP (B/W)	SENSOR GROUND

NOTE: *For the wiring color code refer to,* ***Wiring harness - Overview (A.30.A)****.*

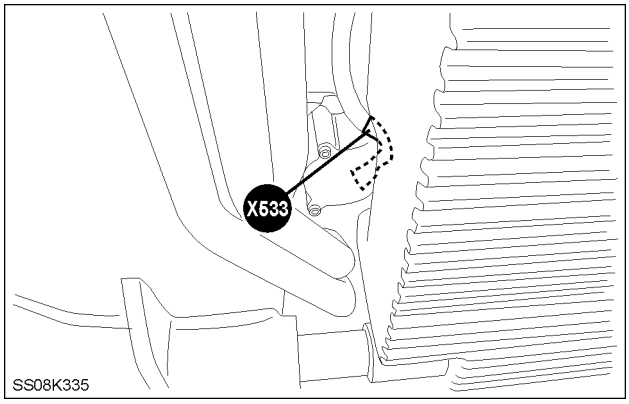

SS08K335 3

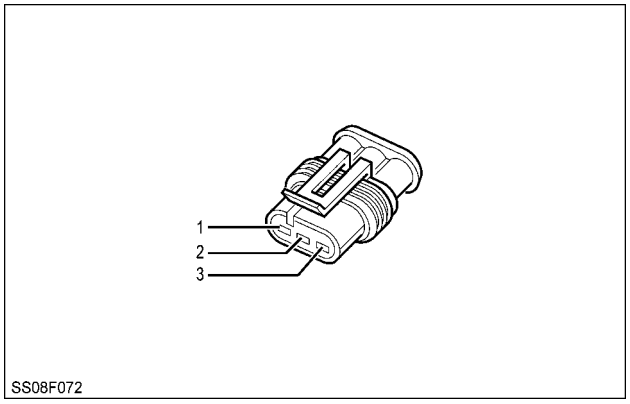

SS08F072 4

RIGHT HAND UNDER SIDE OF TRANSMISSION

https://tractormanualz.com/

X534 POTENTIOMETER SYNCHRONISER F4 - R2

POS.	WIRE NUMBER	CIRCUIT REFERENCE
1	7970 (L)	TRANS MED/REV
2	5020P (TN)	EDC PROC +5V REF VOLTAGE DROP POSN/RATE
3	60BR (B/W)	SENSOR GROUND

NOTE: *For the wiring color code refer to,* ***Wiring harness - Overview (A.30.A)****.*

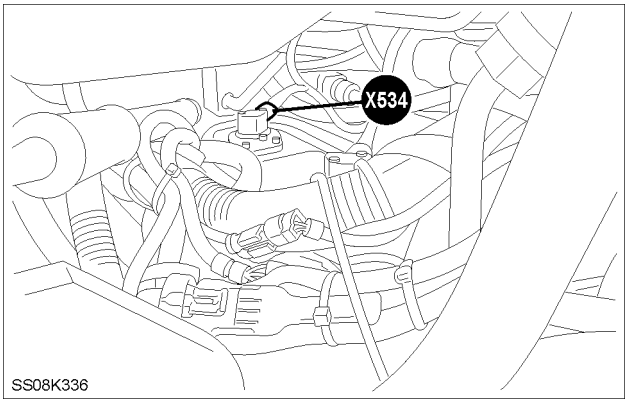

SS08K336 5

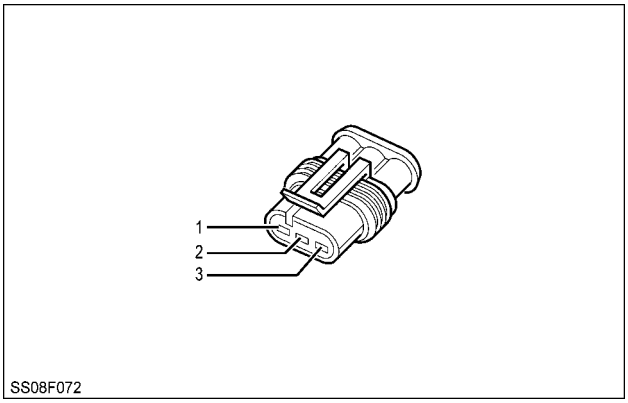

SS08F072 6

RIGHT HAND TOP OF TRANSMISSION

X536 SOLENOID VALVE R1

POS.	WIRE NUMBER	CIRCUIT REFERENCE
1	7220 (S)	TRANSMISSION HIGH RANGE
2	7225 (W)	TRANS HI RANGE SOL - RET

NOTE: *For the wiring color code refer to,* ***Wiring harness - Overview (A.30.A)****.*

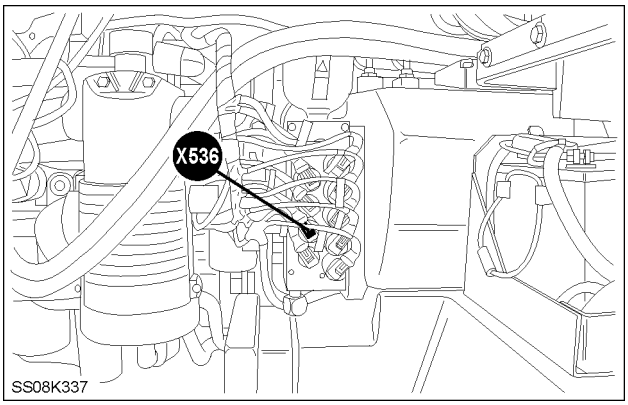

SS08K337 7

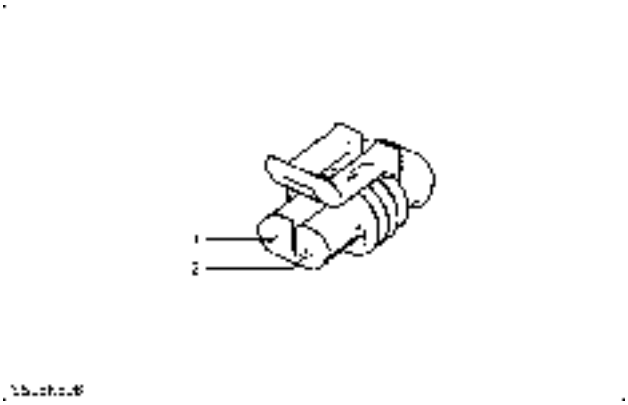

SS08K508 8

RIGHT HAND TRANSMISSION

https://tractormanualz.com/

X537 SOLENOID VALVE F1

POS.	WIRE NUMBER	CIRCUIT REFERENCE
1	7920 (TQ)	CLUTCH 'C' SIGNAL
2	7925 (L)	TCM CLUTCH C RETURN

NOTE: *For the wiring color code refer to,* ***Wiring harness - Overview (A.30.A)****.*

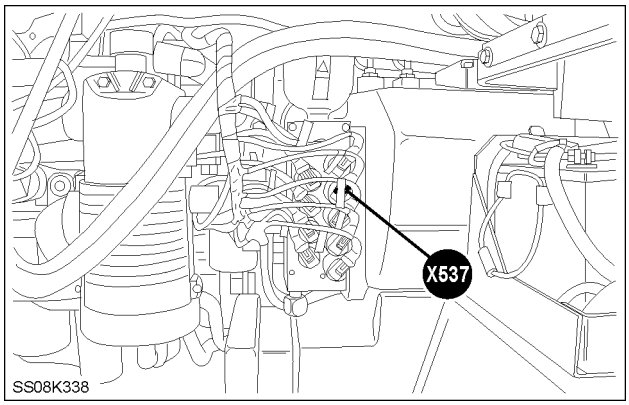

SS08K338 9

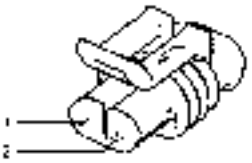

SS08K508 10

RIGHT HAND TRANSMISSION

X538 SOLENOID VALVE F3

POS.	WIRE NUMBER	CIRCUIT REFERENCE
1	7930 (TQ)	CLUTCH 'D' SIGNAL
2	7935 (L)	TCM CLUTCH D RETURN

NOTE: *For the wiring color code refer to,* ***Wiring harness - Overview (A.30.A)****.*

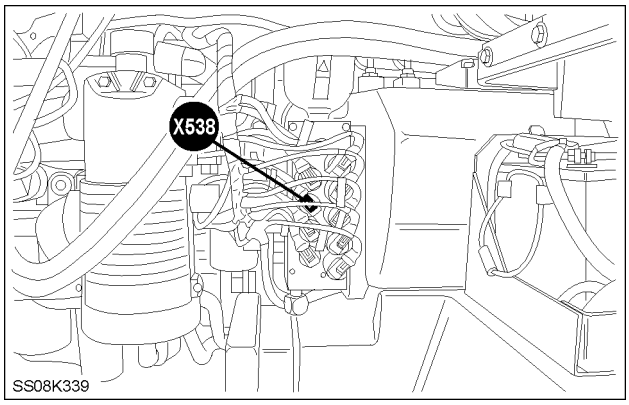

SS08K339 11

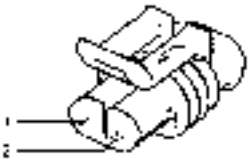

SS08K508 12

RIGHT HAND TRANSMISSION

https://tractormanualz.com/

Connector - Component diagram 54

X541 SOLENOID VALVE R2

POS.	WIRE NUMBER	CIRCUIT REFERENCE
1	9033 (TN)	50KPH SOLENOID+
2	9034 (TN)	50KPH SOLENOID-

NOTE: *For the wiring color code refer to,* ***Wiring harness - Overview (A.30.A)****.*

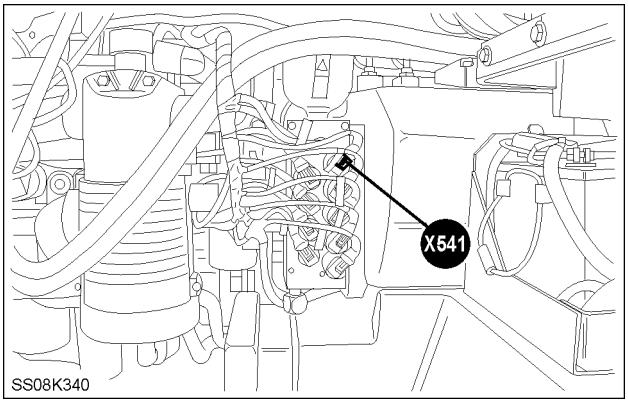

SS08K340 1

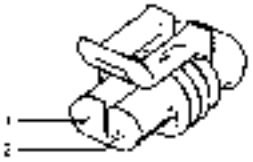

SS08K508 2

RIGHT HAND TRANSMISSION

X542 SOLENOID VALVE F4

POS.	WIRE NUMBER	CIRCUIT REFERENCE
1	7230 (S)	TRANSMISSION LOW RANGE
2	7235 (Y)	TRANS LOW RANGE SOL - RET

NOTE: *For the wiring color code refer to,* ***Wiring harness - Overview (A.30.A)****.*

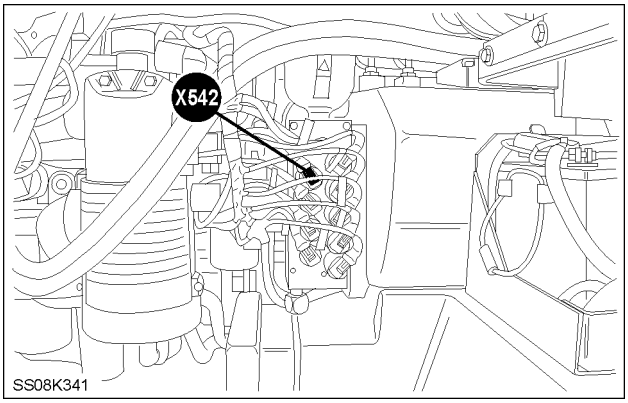

SS08K341 3

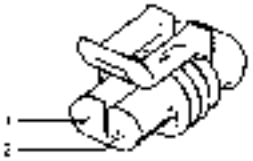

SS08K508 4

RIGHT HAND TRANSMISSION

https://tractormanualz.com/

X543 SOLENOID VALVE F2

POS.	WIRE NUMBER	CIRCUIT REFERENCE
1	7940 (TQ)	CLUTCH 'E' SIGNAL
2	7945 (L)	TCM CLUTCH E RETURN

NOTE: *For the wiring color code refer to,* ***Wiring harness - Overview (A.30.A)****.*

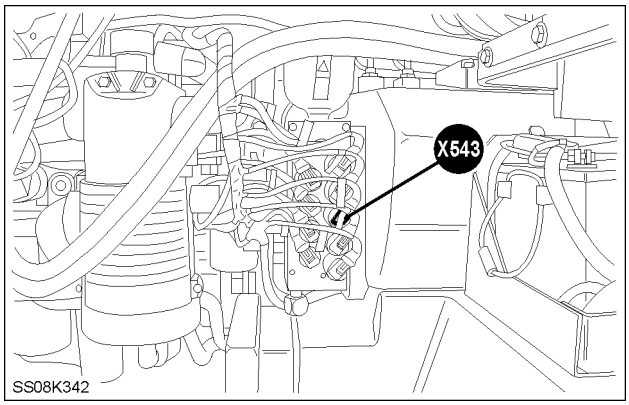

SS08K342 5

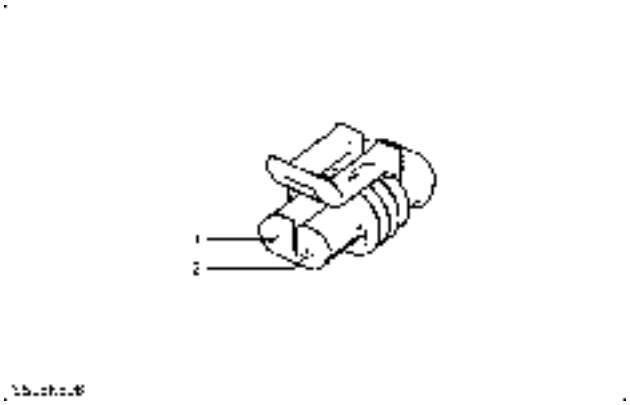

SS08K508 6

RIGHT HAND TRANSMISSION

X544 SOLENOID VALVE HYDROSTAT 1

POS.	WIRE NUMBER	CIRCUIT REFERENCE
1	7985 (G)	TRANS REVERSE RANGE
2	8045 (L)	TRANS REV SOL RET

NOTE: *For the wiring color code refer to,* ***Wiring harness - Overview (A.30.A)****.*

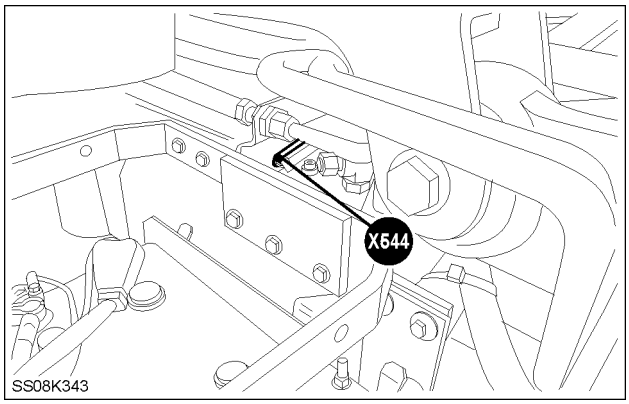

SS08K343 7

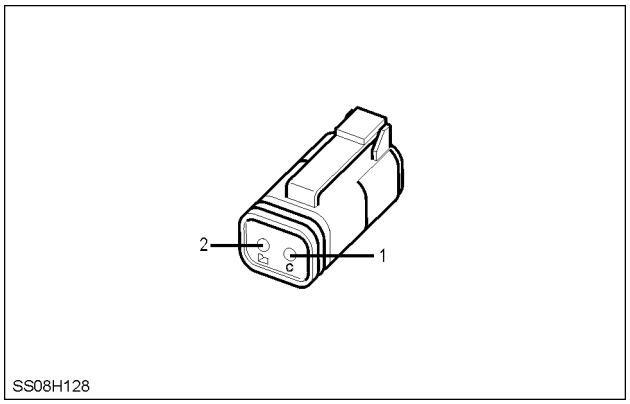

SS08H128 8

RIGHT HAND BEHIND STEPS

https://tractormanualz.com/

X545 SOLENOID VALVE DUMP

POS.	WIRE NUMBER	CIRCUIT REFERENCE
1	9035 (TN)	50KPH DUMP SOLENOID
2	9036 (TN)	50KPH DUMP SOLENOID RETURN

NOTE: *For the wiring color code refer to,* ***Wiring harness - Overview (A.30.A)****.*

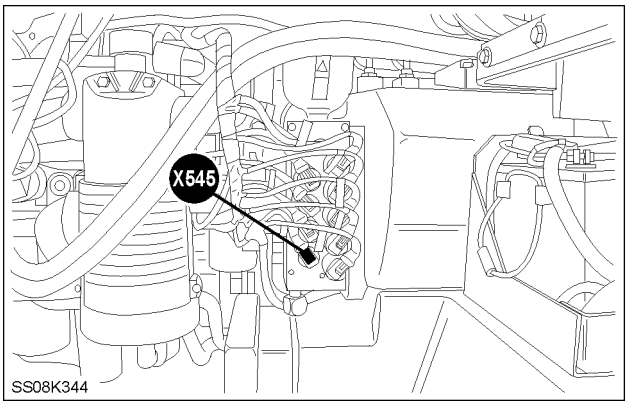

SS08K344 9

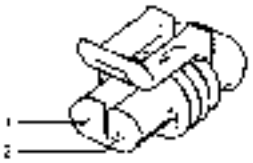

SS08K508 10

RIGHT HAND TRANSMISSION

X546 A CLUTCH PRESSURE SENSOR

POS.	WIRE NUMBER	CIRCUIT REFERENCE
A	60BS (B/W)	SENSOR GROUND
B	5020S (TN)	EDC PROC +5V REF VOLTAGE DROP POSN/RATE
C	7775 (O)	B CLUTCH PRESSURE SIGNAL

NOTE: *For the wiring color code refer to,* ***Wiring harness - Overview (A.30.A)****.*

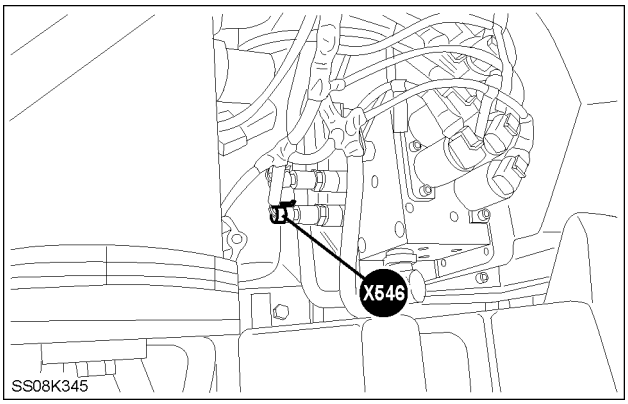

SS08K345 11

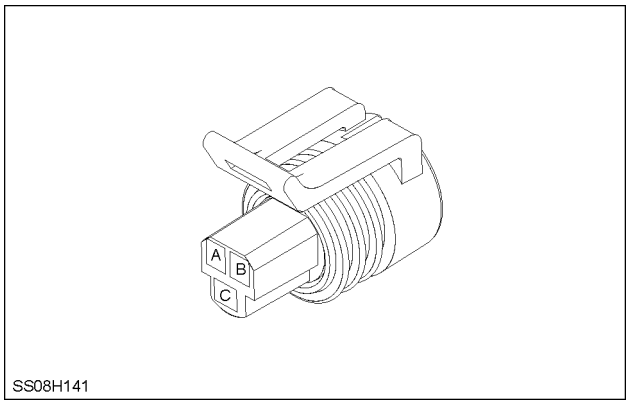

SS08H141 12

RIGHT HAND TRANSMISSION

https://tractormanualz.com/

X547 B CLUTCH PRESSURE SENSOR

POS.	WIRE NUMBER	CIRCUIT REFERENCE
A	60BT (B/W)	SENSOR GROUND
B	5020T (TN)	EDC PROC +5V REF VOLTAGE DROP POSN/RATE
C	7785 (K)	A CLUTCH PRESSURE SIGNAL

NOTE: *For the wiring color code refer to,* ***Wiring harness - Overview (A.30.A)****.*

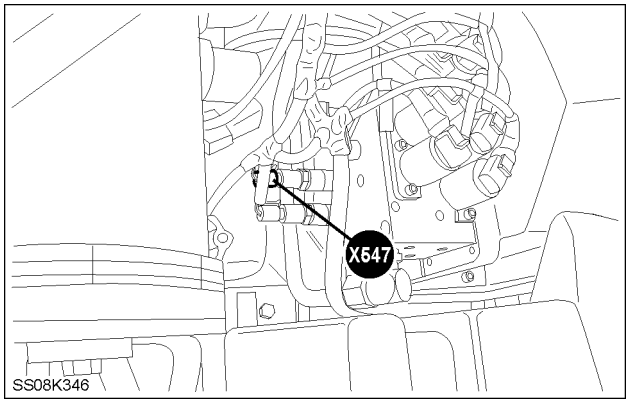

SS08K346 13

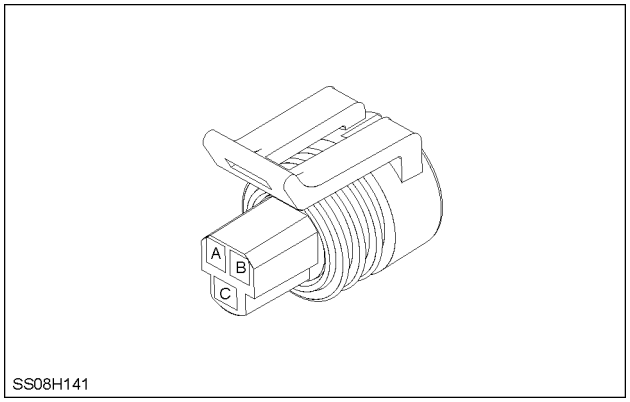

SS08H141 14

RIGHT HAND TRANSMISSION

X549 BRAKE PRESSURE SENSOR

POS.	WIRE NUMBER	CIRCUIT REFERENCE
A	60EX (B/W)	SENSOR GROUND
B	5020W (TN)	EDC PROC +5V REF VOLTAGE DROP POSN/RATE
C	7589 (U)	BRAKE PRESSURE SIGNAL

NOTE: *For the wiring color code refer to,* ***Wiring harness - Overview (A.30.A)****.*

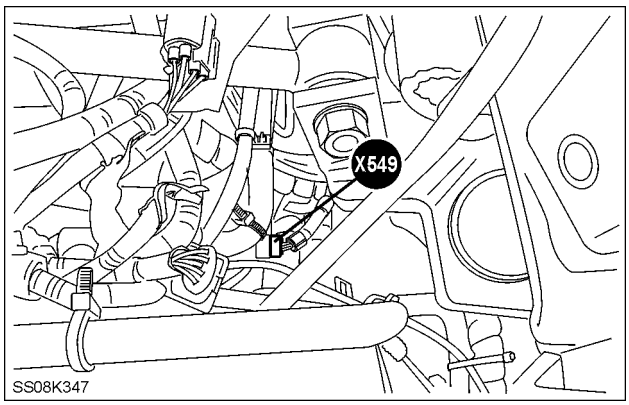

SS08K347 15

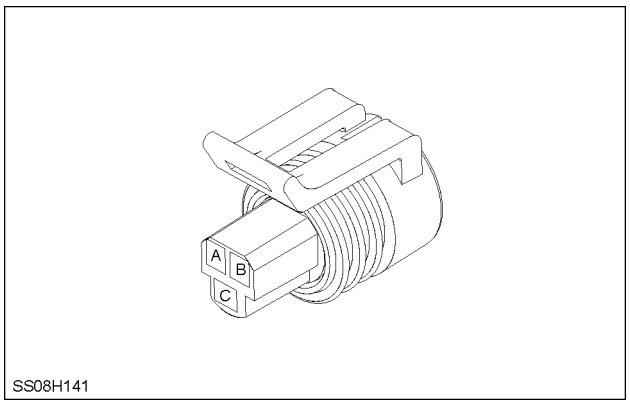

SS08H141 16

REAR RIGHT HAND TRANSMISSION

https://tractormanualz.com/

Connector - Component diagram 55

X550 VANE PUMP PRESSURE SENSOR

POS.	WIRE NUMBER	CIRCUIT REFERENCE
A	7155 (U)	VANE PUMP PRESSURE SENSOR SIGNAL
B	2095J (G)	INSTRUMENT SIGNAL GROUND
C	2014B (G)	ENGINE OIL PRESSURE SENDER (+5 VOLT)

NOTE: *For the wiring color code refer to,* ***Wiring harness - Overview (A.30.A)****.*

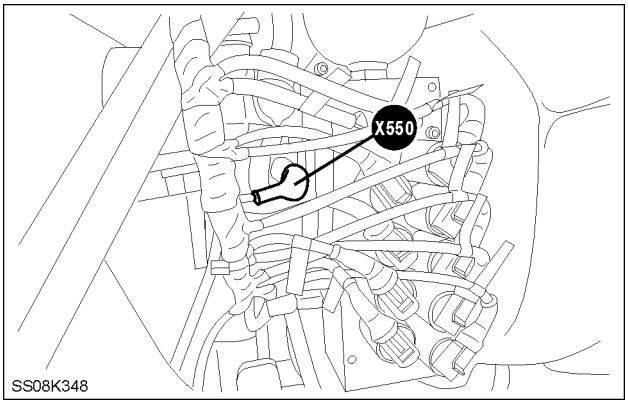

SS08K348 1

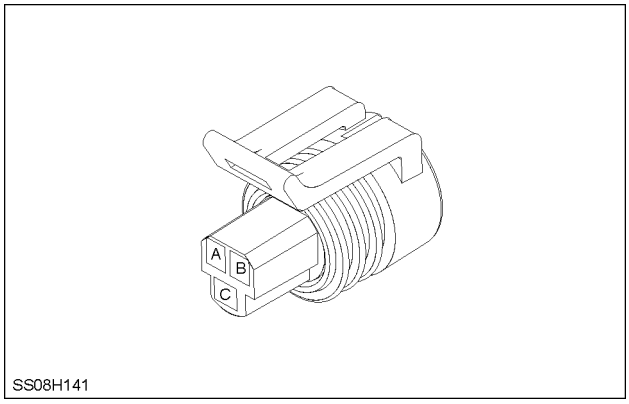

SS08H141 2

RIGHT HAND TRANSMISSION

X551 EXHAUST BRAKE SWITCH

POS.	WIRE NUMBER	CIRCUIT REFERENCE
1	10AA (G)	IGNITION SUPPLY
4	2087 (O)	EXHAUST BRAKE SOLENOID

NOTE: *For the wiring color code refer to,* ***Wiring harness - Overview (A.30.A)****.*

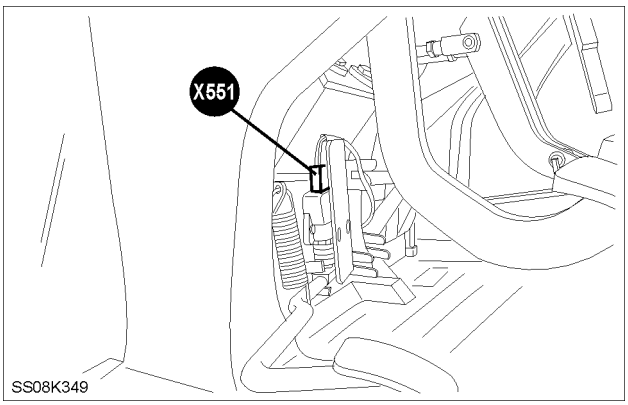

SS08K349 3

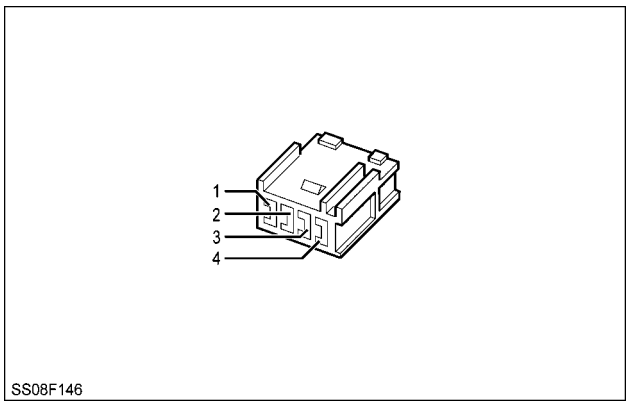

SS08F146 4

FRONT LEFT HAND CAB FLOOR

https://tractormanualz.com/

X555 ADDITIONAL ROOF HEADLAMPS

POS.	WIRE NUMBER	CIRCUIT REFERENCE
1	1013AK (R)	RIGHT HAND LAMPS
2	3000C (G)	FLASHER UNIT SUPPLY (TERMINAL 49)
3	57 GE (B)	EARTH (ALL)
4	1072A (L)	WORKLAMP FRONT RELAY SUPPLY
5	1072B (L)	WORKLAMP FRONT RELAY SUPPLY
6	1099 (R)	FEED FRONT WORKLAMP INNER
7	1027AA (U)	HEADLAMP MAIN BEAM
9	1027B (U)	HEADLAMP MAIN BEAM
10	1030B (U)	HEADLAMP DIP BEAM
11	1027BB (U)	HEADLAMP MAIN BEAM
12	1030BB (U)	HEADLAMP DIP BEAM

NOTE: *For the wiring color code refer to,* ***Wiring harness - Overview (A.30.A)****.*

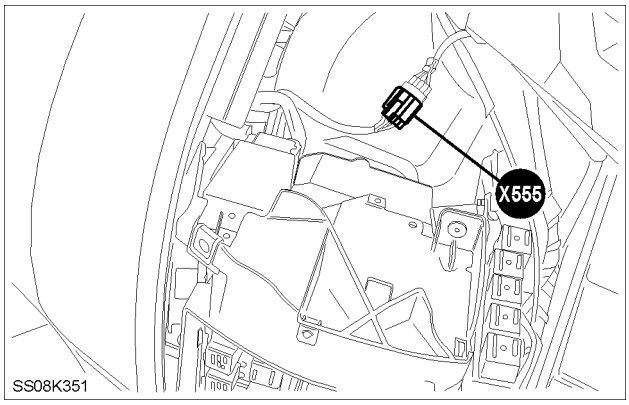

SS08K351 5

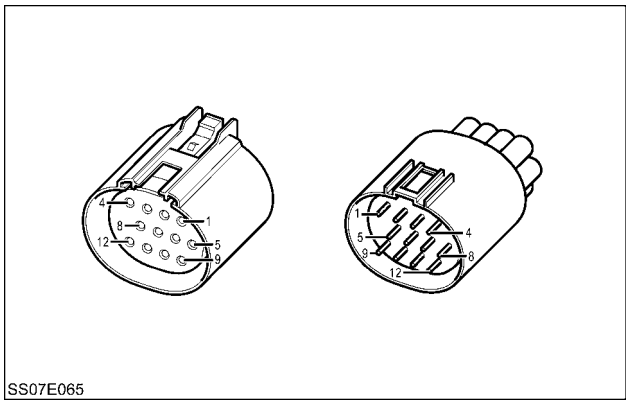

SS07E065 6

BEHIND RIGHT HAND TRIM TOP THE FUSEBOX

https://tractormanualz.com/

X555A CONNECTOR BRIDGE

POS.	WIRE NUMBER	CIRCUIT REFERENCE
9	1027AB (U)	HEADLAMP MAIN BEAM
10	1027BB (U)	HEADLAMP MAIN BEAM
11	1027AB (U)	HEADLAMP MAIN BEAM
12	1027BB (U)	HEADLAMP MAIN BEAM

NOTE: For the wiring color code refer to, **Wiring harness - Overview (A.30.A)**.

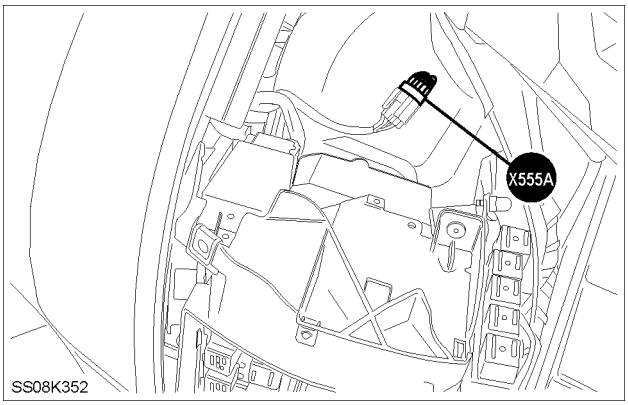

SS08K352 7

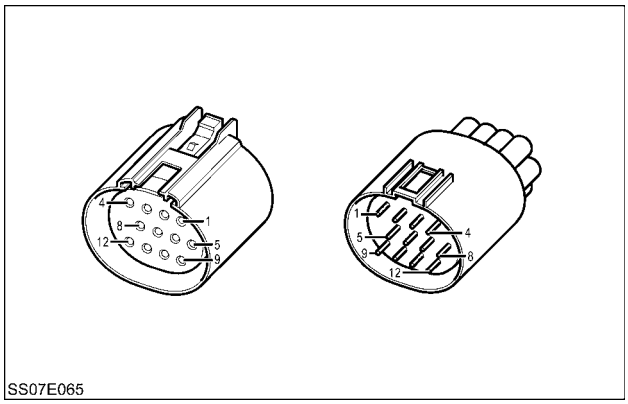

SS07E065 8

BEHIND RIGHT HAND TRIM TOP THE FUSEBOX

X555C MAIN REAR INTERFACE

POS.	WIRE NUMBER	CIRCUIT REFERENCE
9	1027B (U)	HEADLAMP MAIN BEAM
10	1030B (U)	HEADLAMP DIP BEAM
11	1027BB (U)	HEADLAMP MAIN BEAM
12	1030BB (U)	HEADLAMP DIP BEAM

NOTE: For the wiring color code refer to, **Wiring harness - Overview (A.30.A)**.

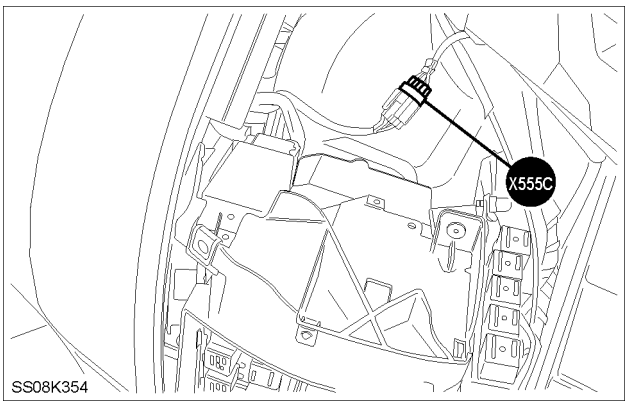

SS08K354 9

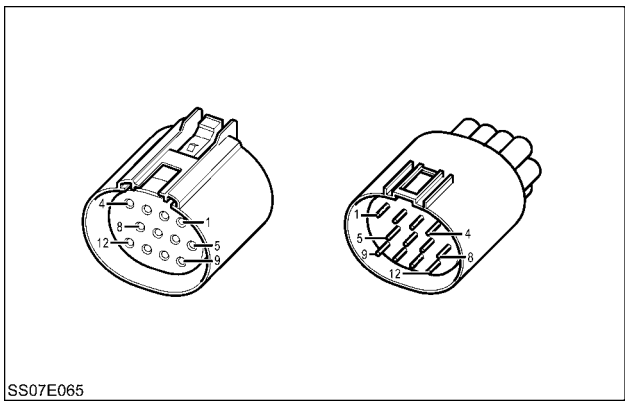

SS07E065 10

BEHIND RIGHT HAND TRIM TOP THE FUSEBOX

https://tractormanualz.com/

Connector - Component diagram 57

X573 EXHAUST BRAKE SOLENOID

POS.	WIRE NUMBER	CIRCUIT REFERENCE
1	2087 (O)	EXHAUST BRAKE SOLENOID
2	6408P (G)	FUSED B+ TO ECU (1)

NOTE: *For the wiring color code refer to,* ***Wiring harness - Overview (A.30.A)****.*

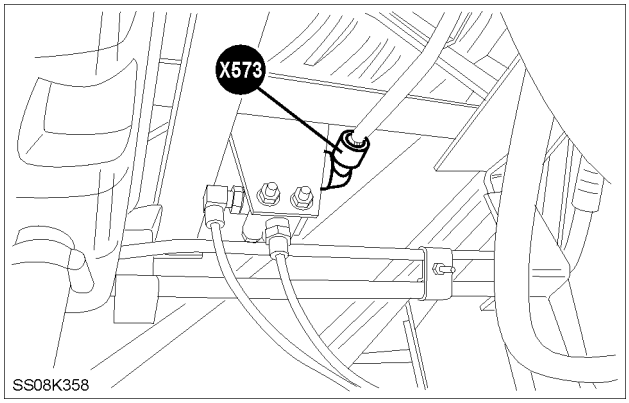

SS08K358 1

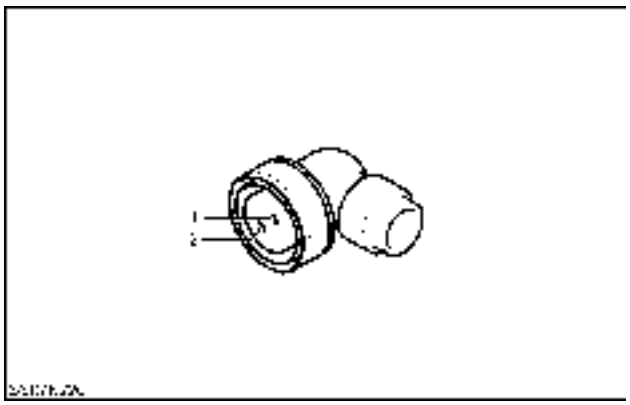

SS07K220 2

TOP OF ENGINE

https://tractormanualz.com/

Connector - Component diagram 60

X600 ISO IMPLEMENT SOCKET (FRONT)

POS.	WIRE NUMBER	CIRCUIT REFERENCE
1	57MT (B)	EARTH (ALL)
2	57MV (B)	EARTH (ALL)
3	5975 (O)	ISO RELAY 2 POWER OUT
4	5985 (U)	ISO RELAY 1 POWER OUT

NOTE: *For the wiring color code refer to,* ***Wiring harness - Overview (A.30.A)****.*

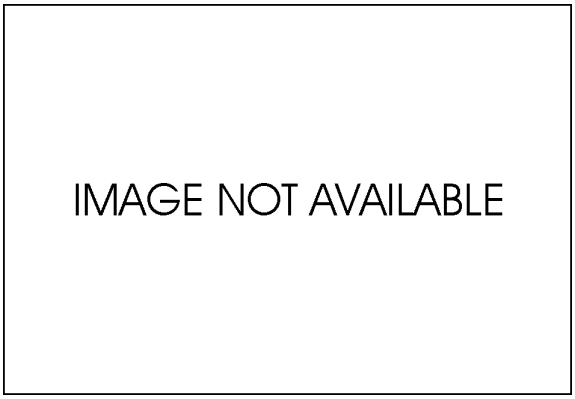

INA 1

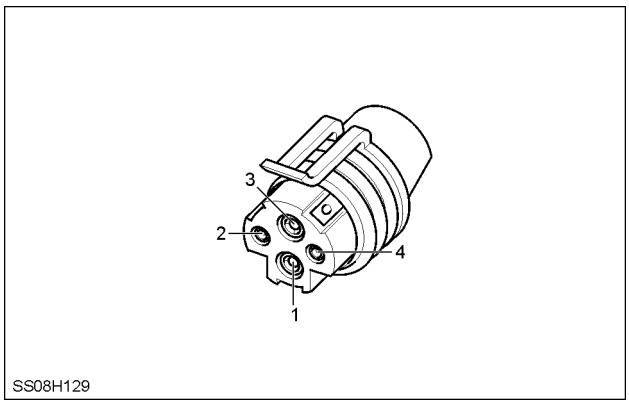

SS08H129 2

X601 ISO IMPLEMENT SOCKET (REAR)

POS.	WIRE NUMBER	CIRCUIT REFERENCE
1	57MT (B)	EARTH (ALL)
2	57MV (B)	EARTH (ALL)
3	5975 (O)	ISO RELAY 2 POWER OUT
4	5985 (U)	ISO RELAY 1 POWER OUT

NOTE: *For the wiring color code refer to,* ***Wiring harness - Overview (A.30.A)****.*

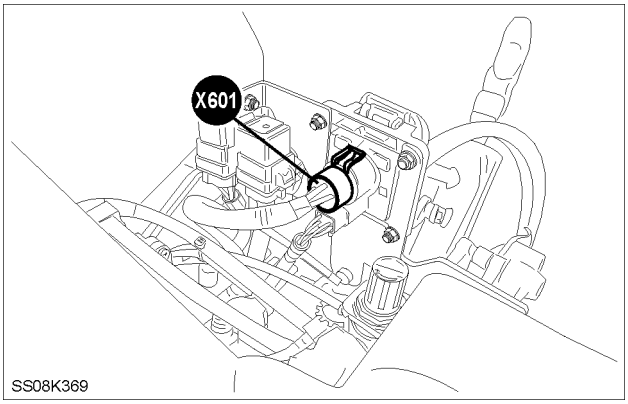

SS08K369 3

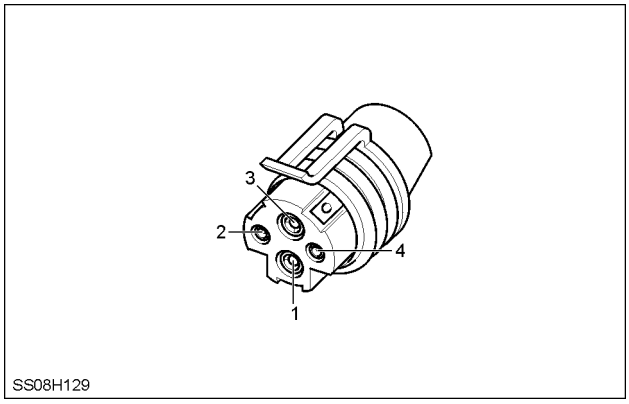

SS08H129 4

REAR OF TRACTOR

https://tractormanualz.com/

X602 ISO RELAY 1 REAR (K040)

POS.	WIRE NUMBER	CIRCUIT REFERENCE
30	150AW (N)	BATTERY FEED (UNFUSED)(ALL)
85	5980 (U)	ISO BUS IMPLEMENT SIGNAL
86	57MX (B)	EARTH (ALL)
87	5985 (U)	ISO RELAY 1 POWER OUT

NOTE: *For the wiring color code refer to,* ***Wiring harness - Overview (A.30.A)****.*

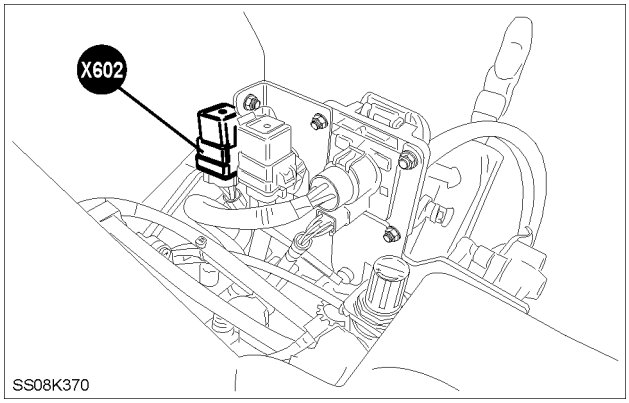

SS08K370 5

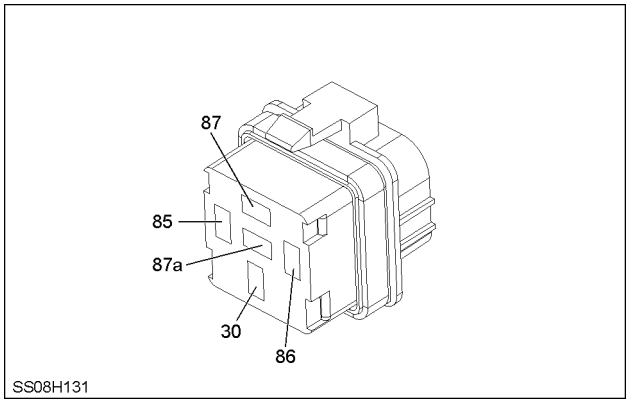

SS08H131 6

REAR OF TRACTOR

X603 ISO RELAY 2 REAR (K041)

POS.	WIRE NUMBER	CIRCUIT REFERENCE
30	150AX (N)	BATTERY FEED (UNFUSED)(ALL)
85	5970A (O)	ISO BUS ECU SIGNAL
86	57MY (B)	EARTH (ALL)
87	5975 (O)	ISO RELAY 2 POWER OUT

NOTE: *For the wiring color code refer to,* ***Wiring harness - Overview (A.30.A)****.*

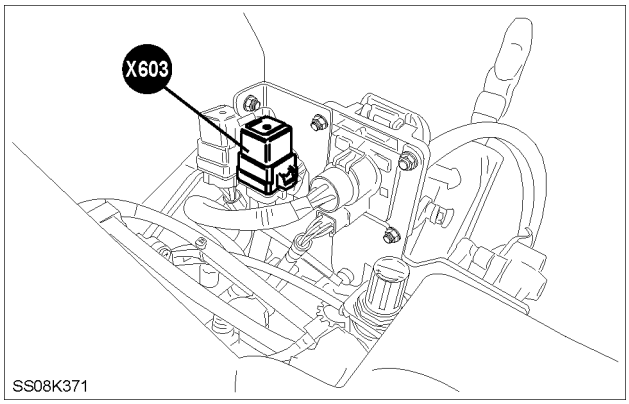

SS08K371 7

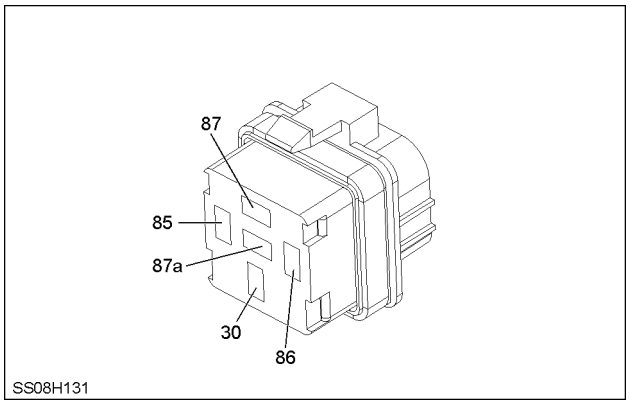

SS08H131 8

REAR OF TRACTOR

https://tractormanualz.com/

X605 EARTH

POS.	WIRE NUMBER	CIRCUIT REFERENCE
1	57MZ (B)	EARTH (ALL)

NOTE: *For the wiring color code refer to,* ***Wiring harness - Overview (A.30.A)****.*

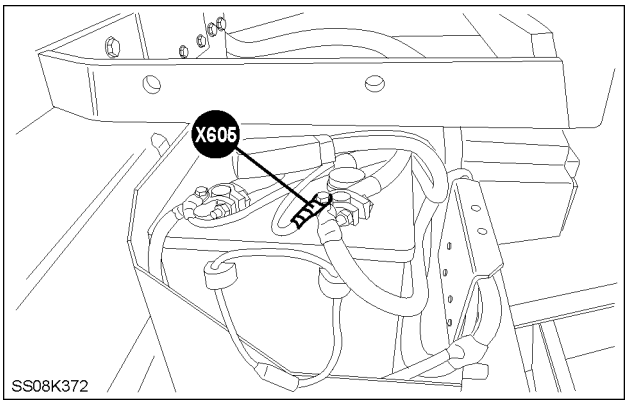

SS08K372 9

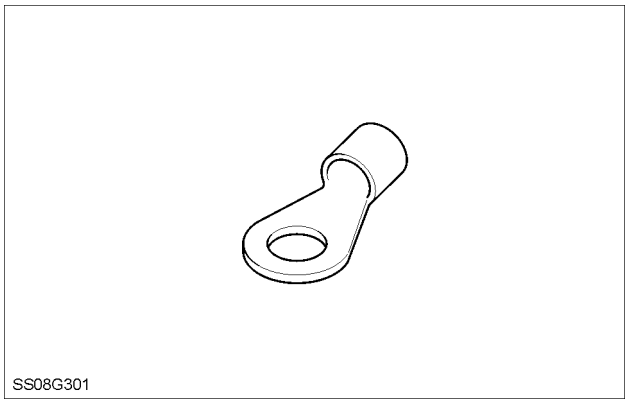

SS08G301 10

RIGHT HAND BEHIND STEPS

X606 FUSE PF4

POS.	WIRE NUMBER	CIRCUIT REFERENCE
1	150AT (N)	BATTERY FEED (UNFUSED)(ALL)
1	150AW (N)	BATTERY FEED (UNFUSED)(ALL)

NOTE: *For the wiring color code refer to,* ***Wiring harness - Overview (A.30.A)****.*

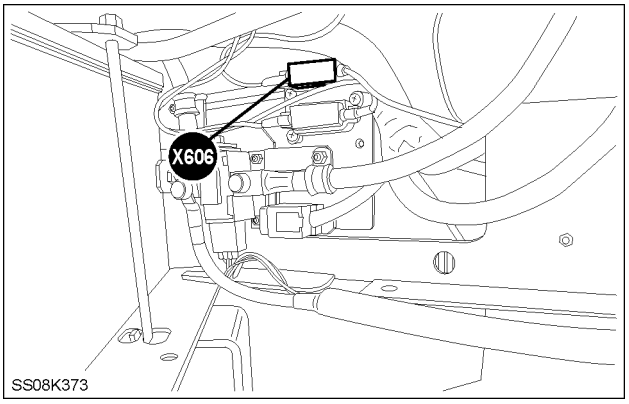

SS08K373 11

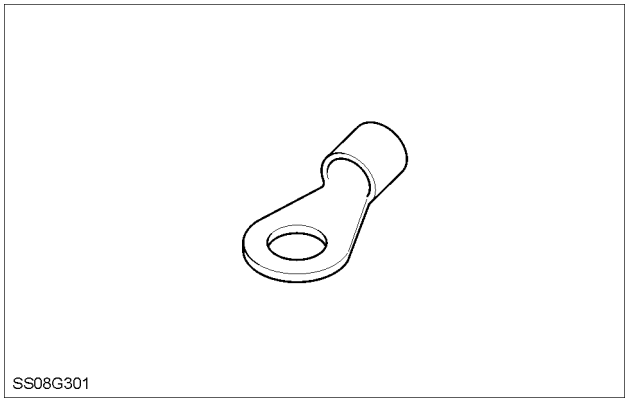

SS08G301 12

RIGHT HAND BEHIND STEPS

https://tractormanualz.com/

X607 FUSE PF5

POS.	WIRE NUMBER	CIRCUIT REFERENCE
1	150AX (N)	BATTERY FEED (UNFUSED)(ALL)
1	150AV (N)	BATTERY FEED (UNFUSED)(ALL)

NOTE: *For the wiring color code refer to,* ***Wiring harness - Overview (A.30.A)****.*

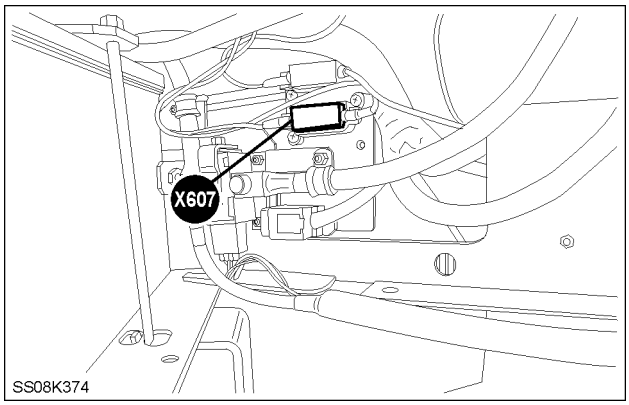

SS08K374 13

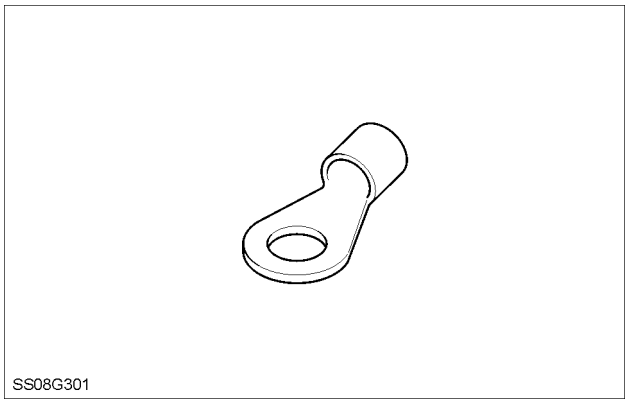

SS08G301 14

RIGHT HAND BEHIND STEPS

X608 ISO BUS POWER SUPPLY

POS.	WIRE NUMBER	CIRCUIT REFERENCE
1	150AS (N)	BATTERY FEED (UNFUSED)(ALL)

NOTE: *For the wiring color code refer to,* ***Wiring harness - Overview (A.30.A)****.*

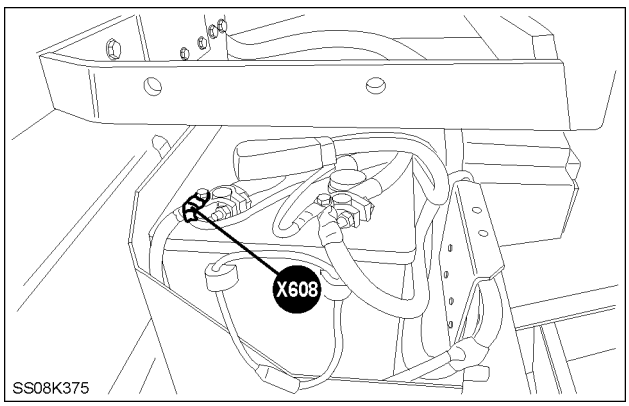

SS08K375 15

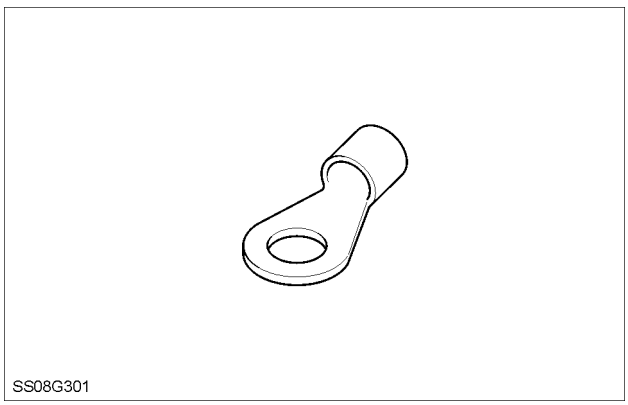

SS08G301 16

RIGHT HAND BEHIND STEPS

https://tractormanualz.com/

Connector - Component diagram 61

X611 HEATED MIRROR SWITCH

POS.	WIRE NUMBER	CIRCUIT REFERENCE
2	1925A (R)	MIRROR CONTROL +12V
3	1928 (R)	HEATED MIRROR RELAY COIL +12V FROM SW
7	57CY (B)	EARTH (ALL)
8	1927B (R)	MIRROR ILLUMINATION
9	57PW (B)	EARTH (ALL)
10	1012N (R)	ILLUMINATION

NOTE: *For the wiring color code refer to,* ***Wiring harness - Overview (A.30.A)****.*

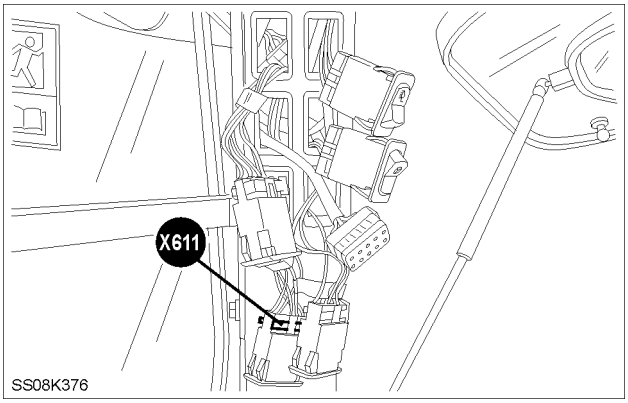

SS08K376 1

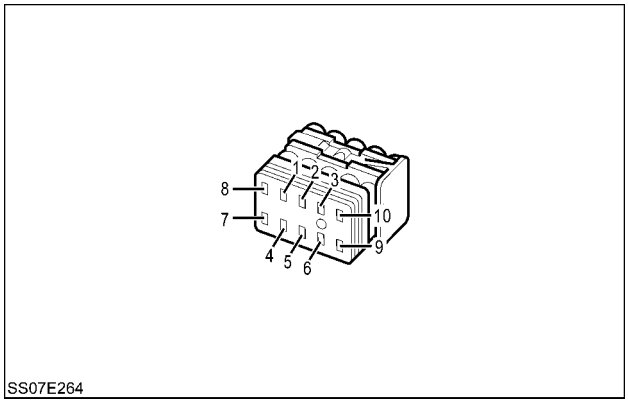

SS07E264 2

REAR RIGHT HAND C-PILLAR

X613 TECU POWER IN / OUT

POS.	WIRE NUMBER	CIRCUIT REFERENCE
1	5980D (U)	ISO BUS IMPLEMENT SIGNAL
2	5970 (O)	ISO BUS ECU SIGNAL
3	7000AR (U)	TRANS CONTROL SUPPLY

NOTE: *For the wiring color code refer to,* ***Wiring harness - Overview (A.30.A)****.*

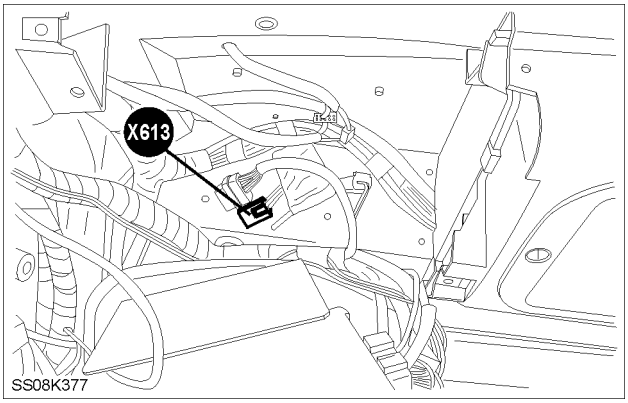

SS08K377 3

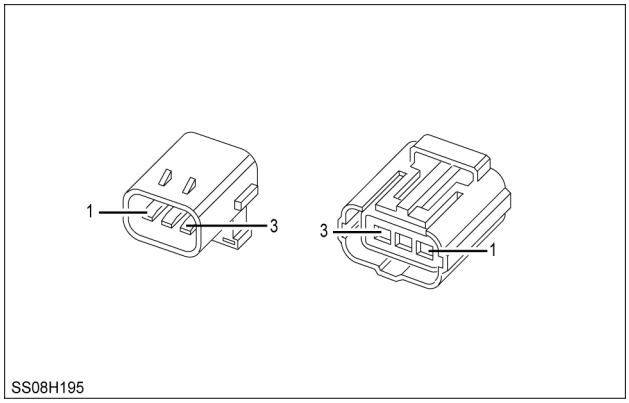

SS08H195 4

IN CAB RIGHT HAND BEHIND OPERATOR'S SEAT

https://tractormanualz.com/

X614 TECU BY - PASS

POS.	WIRE NUMBER	CIRCUIT REFERENCE
1	5980C (U)	ISO BUS IMPLEMENT SIGNAL
2	5970B (O)	ISO BUS ECU SIGNAL
3	7000AR (U)	TRANS CONTROL SUPPLY

NOTE: *For the wiring color code refer to,* ***Wiring harness - Overview (A.30.A)****.*

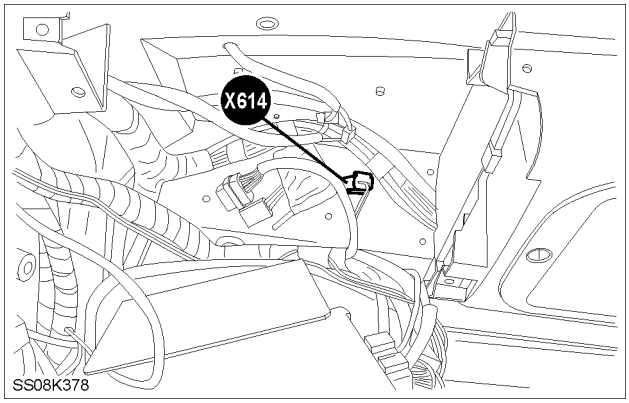

SS08K378 5

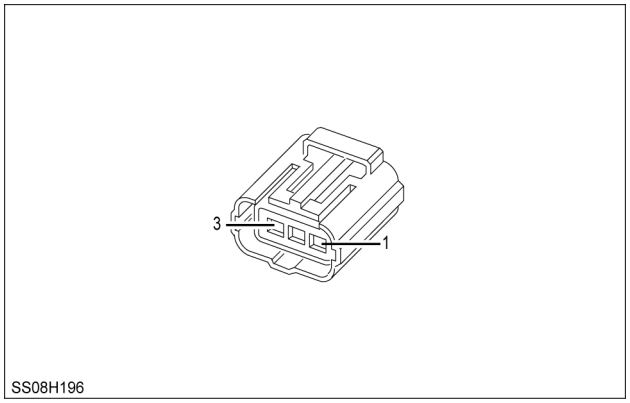

SS08H196 6

IN CAB RIGHT HAND BEHIND OPERATOR'S SEAT

https://tractormanualz.com/

X615 TECU VT / SWCD INPUT

POS.	WIRE NUMBER	CIRCUIT REFERENCE
1	5900A (Y) / 5900G (Y) / 5900C (Y)	ISO BUS CAN SIGNAL LOW
2	5910A (G) / 5910G (G) / 5910C (G)	ISO BUS CAN SIGNAL HIGH
3	5915A (B) / 5915G (R) / 5915C (B)	ISO BUS CAN SUPPLY GROUND
4	5920A (R) / 5920G (B) / 5920C (R)	ISO BUS CAN SUPPLY POSITIVE
5	- / 5960B (O) / 5960B (Y)	RS232 OUTPUT TECU
6	5500B (R) / 5500AB (R) / 5500A (R)	EHR CAN HIGH
7	5510B (U) / 5510AB (U) / 5510A (U)	EHR CAN LOW
8	- / 5000 (L)	EDC MEMORY POWER
9	- / 5955 (O) / 5955 (Y)	RS232 INPUT TECU
11	- / 7000AS (U) / 7000AT (U)	TRANS CONTROL SUPPLY
12	- / 1012J (R)	ILLUMINATION
13	- / 57SW (B) / 57A (B)	EARTH (ALL)

NOTE: *For the wiring color code refer to,* ***Wiring harness - Overview (A.30.A)****.*

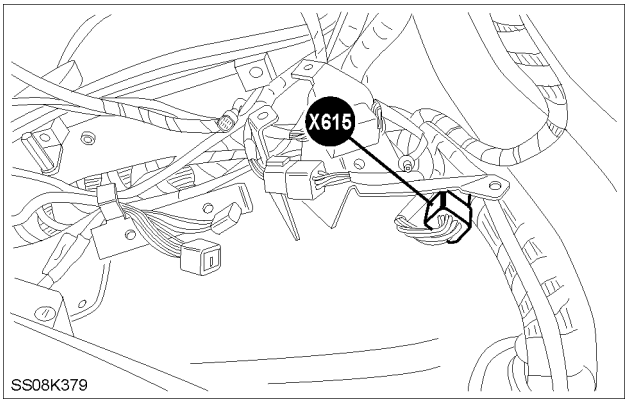

SS08K379 7

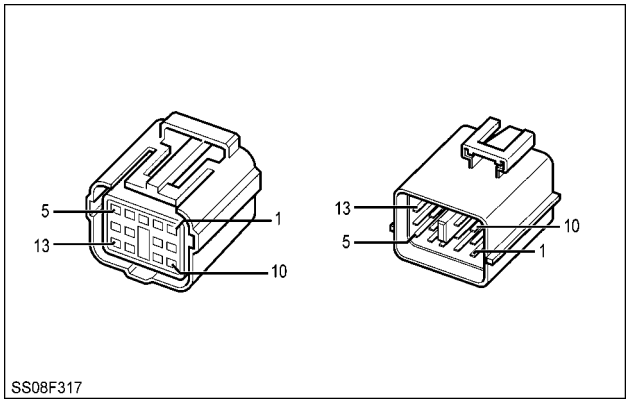

SS08F317 8

BEHIND RIGHT HAND TRIM

https://tractormanualz.com/

X616 TECU UNIT CN1

POS.	WIRE NUMBER	CIRCUIT REFERENCE
1	5900D (Y)	ISO BUS CAN SIGNAL LOW
2	5910D (G)	ISO BUS CAN SIGNAL HIGH
4	5400P (Y)	CAN H
5	5420P (G)	CAN L
10	5000C (L)	EDC MEMORY POWER
11	57TA (B)	EARTH (ALL)
14	5980D (U)	ISO BUS IMPLEMENT SIGNAL
15	5970 (O)	ISO BUS ECU SIGNAL
16	7000AR (U)	TRANS CONTROL SUPPLY
21	61T (B/O)	CASE GROUND

NOTE: *For the wiring color code refer to,* ***Wiring harness - Overview (A.30.A)****.*

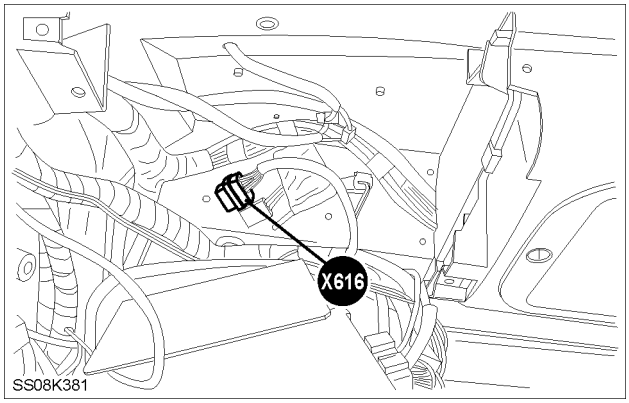

SS08K381 9

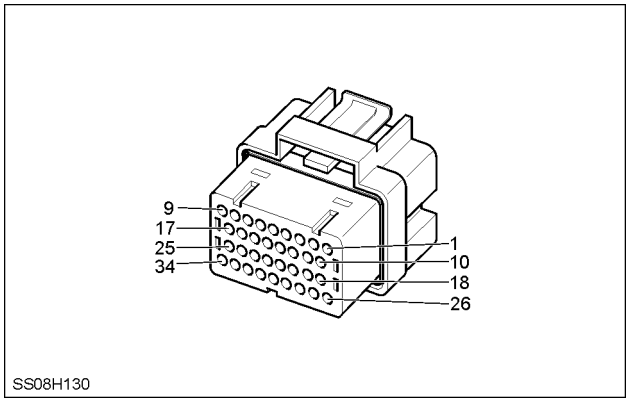

SS08H130 10

IN CAB RIGHT HAND BEHIND OPERATOR'S SEAT

X618 ISO BUS CAN TERMINATOR

POS.	WIRE NUMBER	CIRCUIT REFERENCE
1	5920E (R	ISO BUS CAN SUPPLY POSITIVE
2	5900E (Y)	ISO BUS CAN SIGNAL LOW
3	5915E (B)	ISO BUS CAN SUPPLY GROUND
4	5910E (G)	ISO BUS CAN SIGNAL HIGH

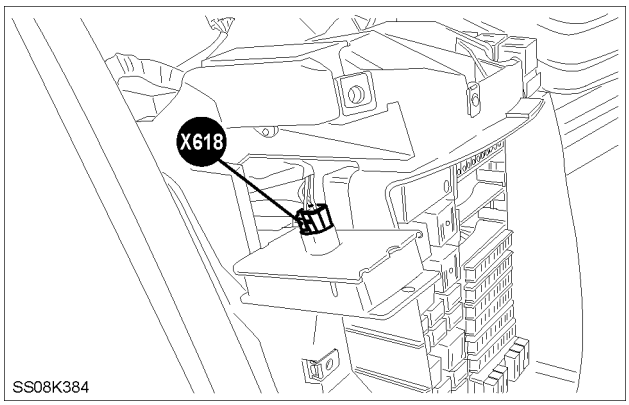

SS08K384 11

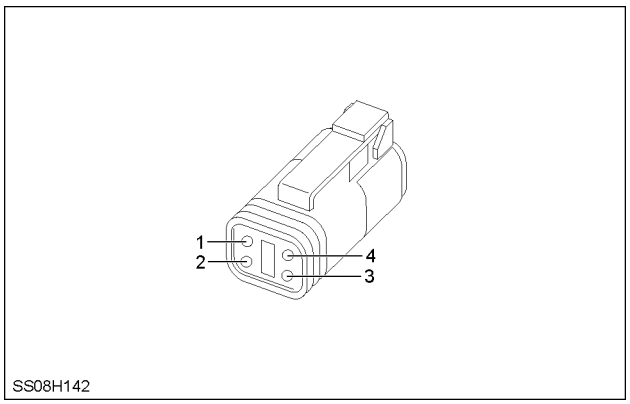

SS08H142 12

BEHIND RIGHT HAND TRIM TOP THE FUSEBOX

https://tractormanualz.com/

X618 ISO BUS CAN EXTENSION

POS.	WIRE NUMBER	CIRCUIT REFERENCE
1	5920E (R)	ISO BUS CAN SUPPLY POSITIVE
2	5900E (Y)	ISO BUS CAN SIGNAL LOW
3	5915E (B)	ISO BUS CAN SUPPLY GROUND
4	5910E (G)	ISO BUS CAN SIGNAL HIGH

NOTE: *For the wiring color code refer to,* ***Wiring harness - Overview (A.30.A)****.*

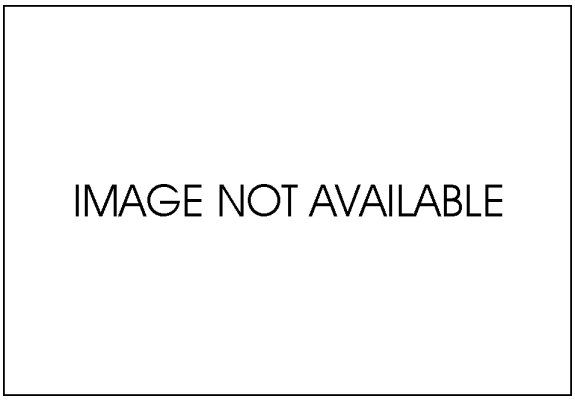

INA 13

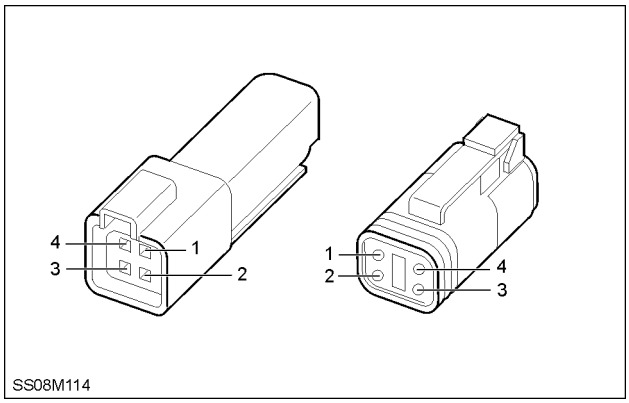

SS08M114 14

BEHIND RIGHT HAND TRIM TOP THE FUSEBOX

https://tractormanualz.com/

X619 TECU VT / SWCD OUTPUT

POS.	WIRE NUMBER	CIRCUIT REFERENCE
1	5900 (Y) / 5900G (Y)	ISO BUS CAN SIGNAL LOW
2	5910 (G) /5910G (G)	ISO BUS CAN SIGNAL HIGH
3	5920 (R) / 5915G (R) / 5915G (B)	ISO BUS CAN SUPPLY GROUND
4	5915 (B) / 5920G (B) / 5920G (R)	ISO BUS CAN SUPPLY POSITIVE
5	- / 5960B (O) / 5960C (Y)	RS232 OUTPUT TECU
6	5500W (R) / 5500M (R) / 5500K (R)	EHR CAN HIGH
7	5510W (U) / 5510M (U) / 5510K (U)	EHR CAN LOW
8	5000DE (L) / 5000 (L)	EDC MEMORY POWER
9	5955 (O) / -	RS232 INPUT TECU
11	7000R (U) / 7000AS (U) / 7000AT (U)	TRANS CONTROL SUPPLY
12	1012J (R)	ILLUMINATION
13	57SW (B) / 57G (B)	EARTH /(ALL)

NOTE: *For the wiring color code refer to,* ***Wiring harness - Overview (A.30.A)****.*

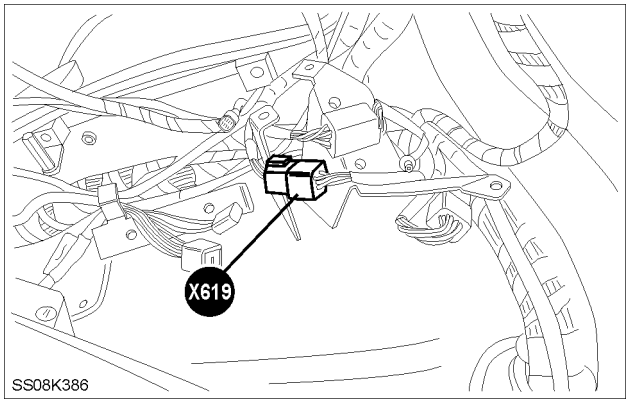

SS08K386 15

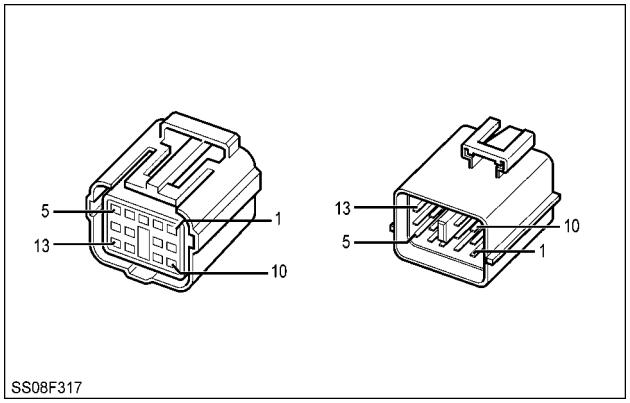

SS08F317 16

BEHIND RIGHT HAND TRIM

https://tractormanualz.com/

Connector - Component diagram 62

X620 FRONT BREAK AWAY (OPTION)

POS.	WIRE NUMBER	CIRCUIT REFERENCE
1	5980B (U) / 5980 (U)	ISO BUS IMPLEMENT SIGNAL
2	5970C (O) / 5970A (O)	ISO BUS ECU SIGNAL
3	2250P (K) / -	PTO FRONT - SUPPLY

NOTE: *For the wiring color code refer to,* ***Wiring harness - Overview (A.30.A)****.*

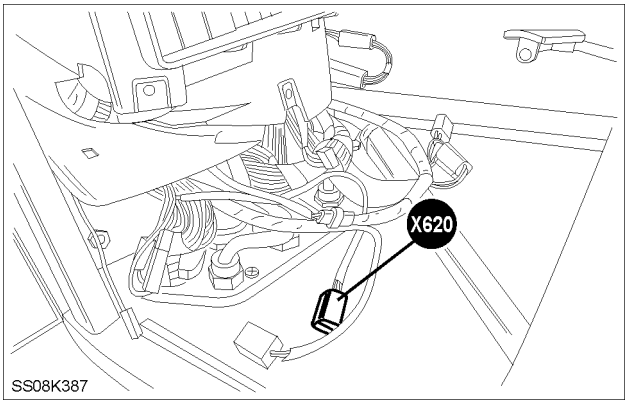

SS08K387 1

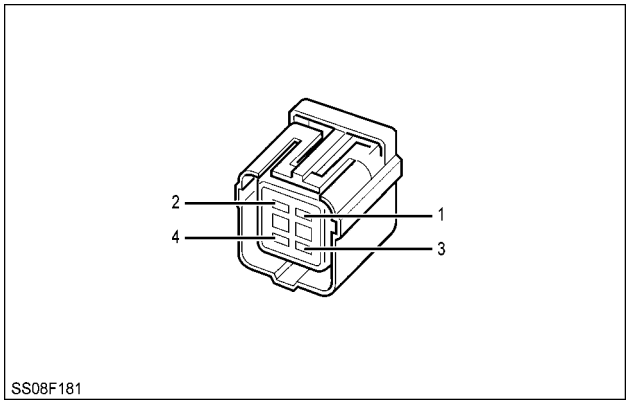

SS08F181 2

FRONT RIGHT HAND CAB FLOOR

https://tractormanualz.com/

X621 CONTROL UNIT FAST STEER

POS.	WIRE NUMBER	CIRCUIT REFERENCE
A1	3170 (O)	FSS – ENABLE
A2	3173 (R)	FSS – HYDRAULIC VALVE HIGH SIDE DRIVER
A4	5400 (Y)	CAN H
A5	5420 (G)	CAN L
A6	3174 (G)	FSS – HYDRAULIC VALVE LOW SIDE DRIVER
A7	57C (B)	EARTH (ALL)
A8	57B (B)	EARTH (ALL)
B1	3171 (O)	FSS – LAMP
B4	3172 (L)	FSS – STEERING PROXIMITY SENSOR POSITION
B5	3178 (G/Y)	FSS – POSITION SENSOR SECONDARY POSITIVE
B6	3179 (N)	FSS – POSITION SENSOR SECONDARY NEGATIVE
B8	160 (U)	BATTERY SUPPLY ELECTRONICS
C1	3175 (W)	FSS – POSITION SENSOR PRIMARY POSITIVE
C2	3176 (B)	FSS – POSITION SENSOR PRIMARY NEGATIVE
C3	3177 (U)	FSS – POSITION SENSOR SECONDARY COMMON
C4	3180 (B)	FSS – SAFETY SWITCH
C8	10D (G)	IGNITION SUPPLY

NOTE: *For the wiring color code refer to,* ***Wiring harness - Overview (A.30.A)****.*

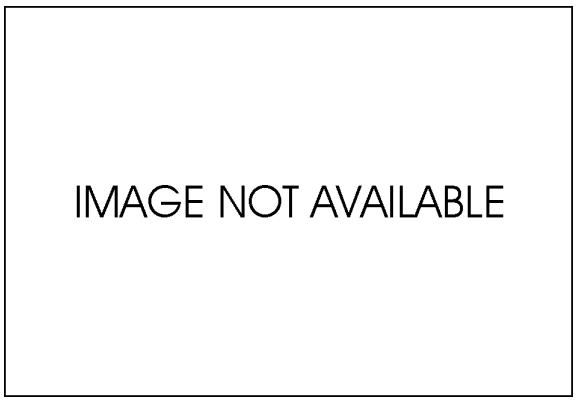

INA 3

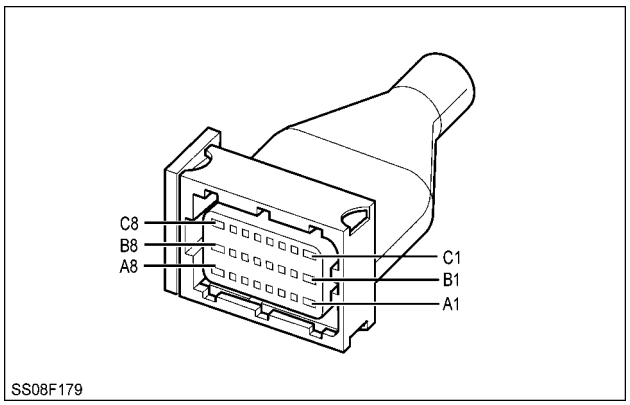

SS08F179 4

BEHIND RIGHT HAND TRIM TOP THE FUSEBOX

https://tractormanualz.com/

X623 FAST STEER CONNECTOR

POS.	WIRE NUMBER	CIRCUIT REFERENCE
1	5000D (L)	EDC MEMORY POWER
2	5200AB (N) / 5200AB (N)	EDC VALVE SUPPLY
3	57HV (B) / 57A (B)	EARTH (ALL)
4	5400V (Y) / 5400 (Y)	CAN H
5	5420 (G)	CAN L
6	1001AC (W)	STARTER SOLENOID FEED
12	- / 3169 (O)	AUTO GUIDANCE DUMP SOLENOID RETURN (CURSEN)
13	- / 3168 (O)	AUTO GUIDANCE DUMP SOLENOID FEED (HSD)

NOTE: *For the wiring color code refer to,* ***Wiring harness - Overview (A.30.A)****.*

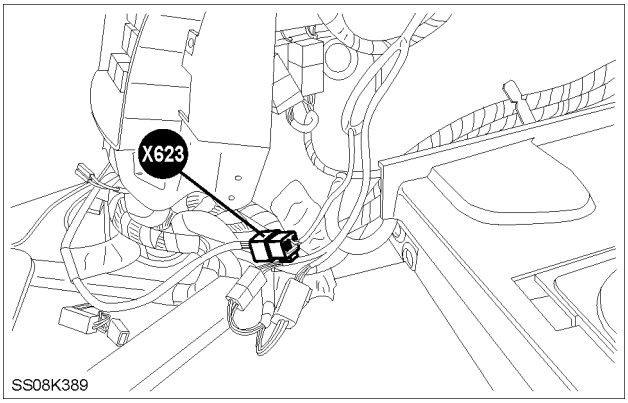

SS08K389 5

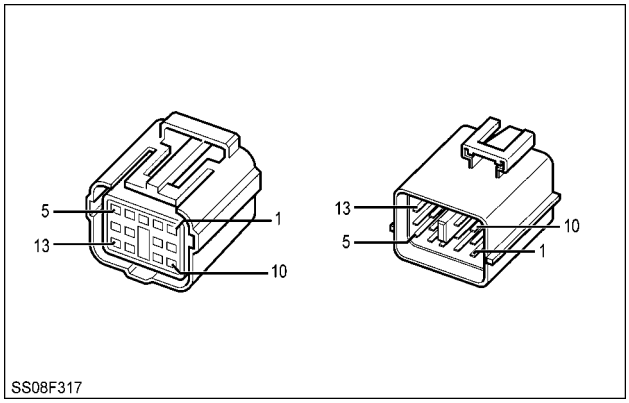

SS08F317 6

FRONT RIGHT HAND CAB FLOOR

X624 FAST STEER CONTROL SWITCH

POS.	WIRE NUMBER	CIRCUIT REFERENCE
2	10B (G)	IGNITION SUPPLY
3	3170 (O)	FSS – ENABLE
4	3180 (B)	FSS – SAFETY SWITCH
5	57 (B)	EARTH (ALL)
7	3171 (O)	FSS – LAMP
8	10E (G)	IGNITION SUPPLY

NOTE: *For the wiring color code refer to,* ***Wiring harness - Overview (A.30.A)****.*

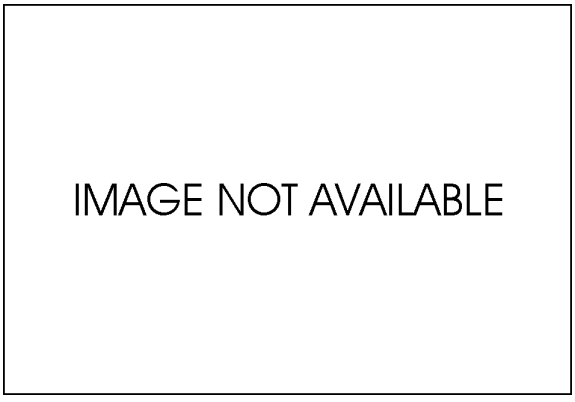

INA 7

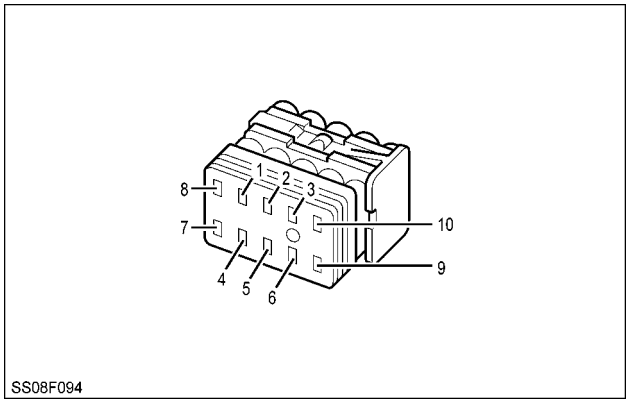

SS08F094 8

REAR RIGHT HAND C-PILLAR

https://tractormanualz.com/

X625 PROXIMITY SENSOR

POS.	WIRE NUMBER	CIRCUIT REFERENCE
2	3172 (L)	FSS – STEERING PROXIMITY SENSOR POSITION
3	10C (G)	IGNITION SUPPLY

NOTE: *For the wiring color code refer to,* ***Wiring harness - Overview (A.30.A)****.*

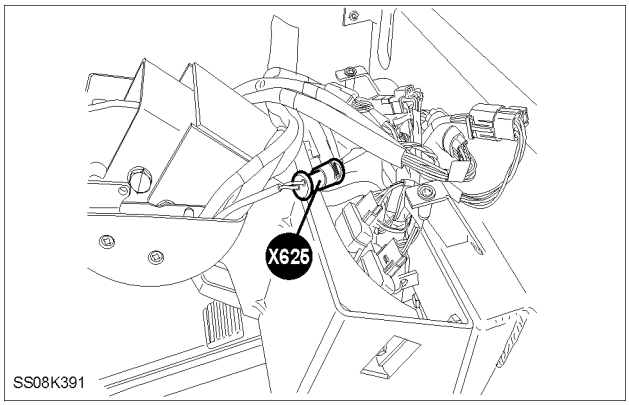

SS08K391 9

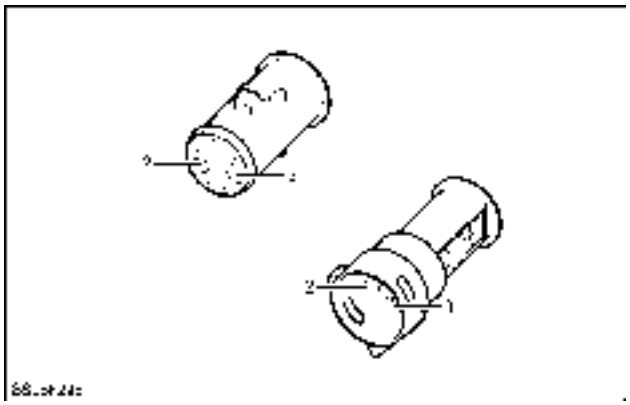

SS08F298 10

STEERING CONSOLE

X626 POSITION TRANSDUCER

POS.	WIRE NUMBER	CIRCUIT REFERENCE
1	3179 (N)	FSS – POSITION SENSOR SECONDARY NEGATIVE
2	3175 (W)	FSS – POSITION SENSOR PRIMARY POSITIVE
3	3177 (U)	FSS – POSITION SENSOR SECONDARY COMMON
4	3176 (B)	FSS – POSITION SENSOR PRIMARY NEGATIVE
5	3178 (G/Y)	FSS – POSITION SENSOR SECONDARY POSITIVE

NOTE: *For the wiring color code refer to,* ***Wiring harness - Overview (A.30.A)****.*

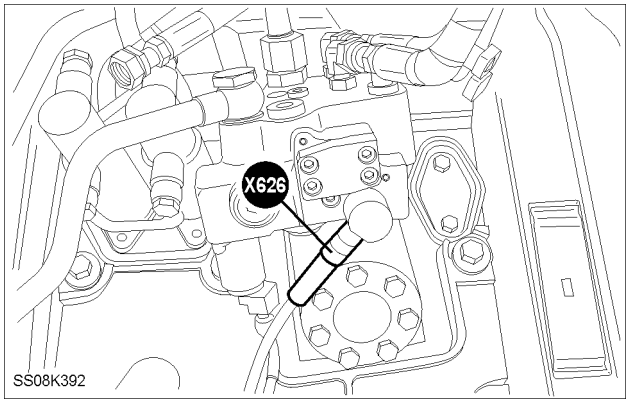

SS08K392 11

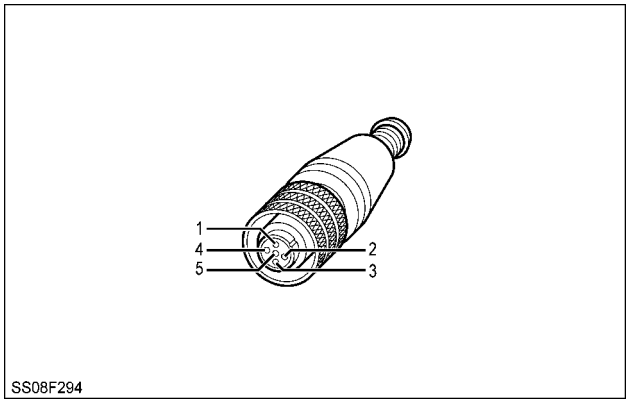

SS08F294 12

REAR OF ENGINE

https://tractormanualz.com/

X627 FAST STEER SOLENOID VALVE

POS.	WIRE NUMBER	CIRCUIT REFERENCE
1	3173 (R)	FSS – HYDRAULIC VALVE HIGH SIDE DRIVER
2	3174 (G)	FSS – HYDRAULIC VALVE LOW SIDE DRIVER

NOTE: *For the wiring color code refer to,* ***Wiring harness - Overview (A.30.A)****.*

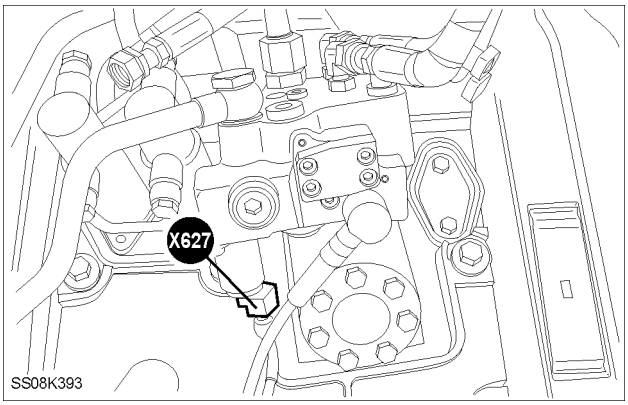

SS08K393 13

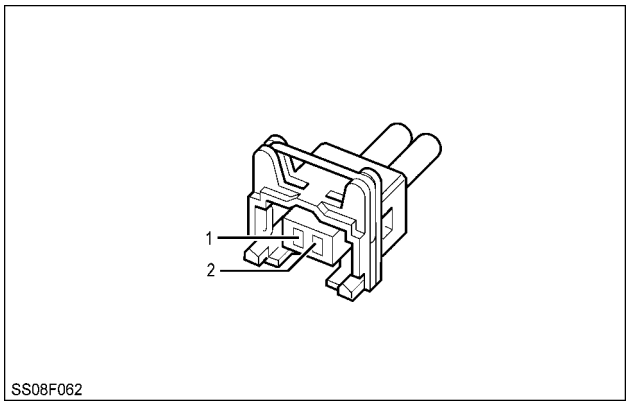

SS08F062 14

REAR OF ENGINE

X628 ISO RELAY 2 FRONT (K043)

POS.	WIRE NUMBER	CIRCUIT REFERENCE
30	150AX (N)	BATTERY FEED (UNFUSED)(ALL)
85	5970A (O)	ISO BUS ECU SIGNAL
86	57MY (B)	EARTH (ALL)
87	5975 (O)	ISO RELAY 2 POWER OUT

NOTE: *For the wiring color code refer to,* ***Wiring harness - Overview (A.30.A)****.*

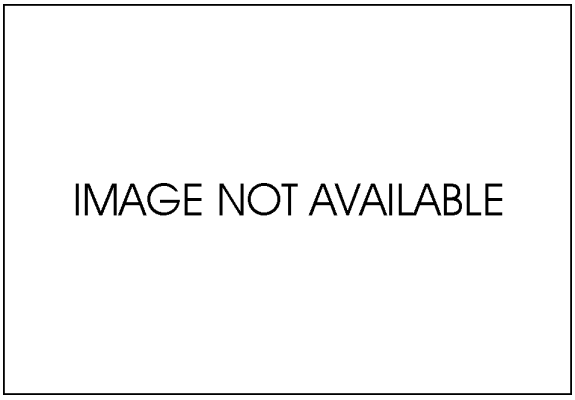

INA 15

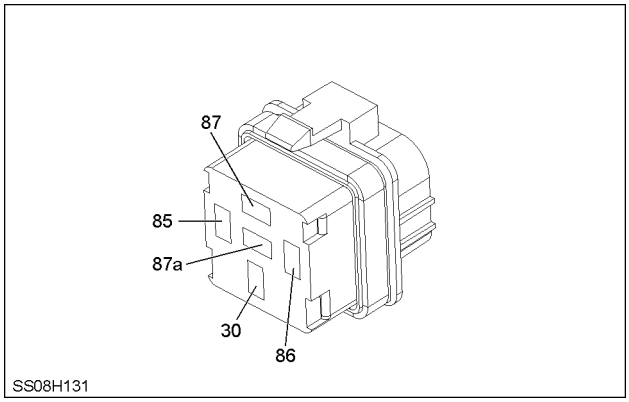

SS08H131 16

LEFT HAND ENGINE

https://tractormanualz.com/

X629 ISO RELAY 1 FRONT (K042)

POS.	WIRE NUMBER	CIRCUIT REFERENCE
30	150AW (N)	BATTERY FEED (UNFUSED)(ALL)
85	5980 (U)	ISO BUS IMPLEMENT SIGNAL
86	57MX (B)	EARTH (ALL)
87	5985 (U)	ISO RELAY 1 POWER OUT

NOTE: *For the wiring color code refer to,* ***Wiring harness - Overview (A.30.A)****.*

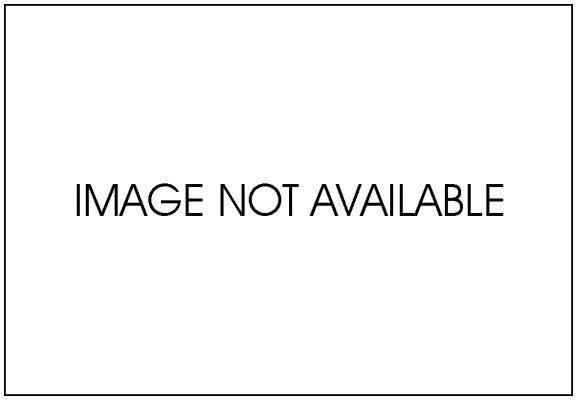

INA 17

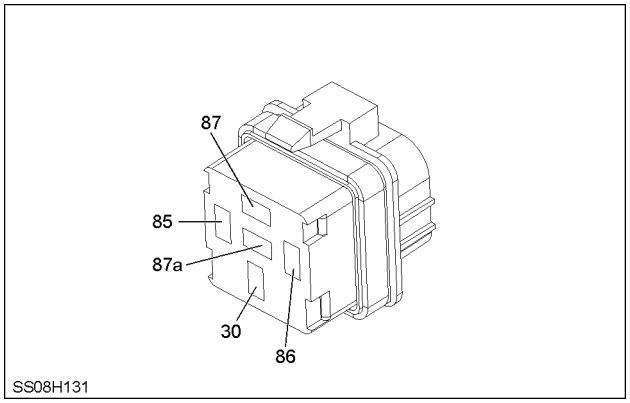

SS08H131 18

LEFT HAND ENGINE

https://tractormanualz.com/

Connector - Component diagram 63

X630 EARTH

POS.	WIRE NUMBER	CIRCUIT REFERENCE
1	57MZ (B)	EARTH (ALL)

NOTE: *For the wiring color code refer to,* ***Wiring harness - Overview (A.30.A)****.*

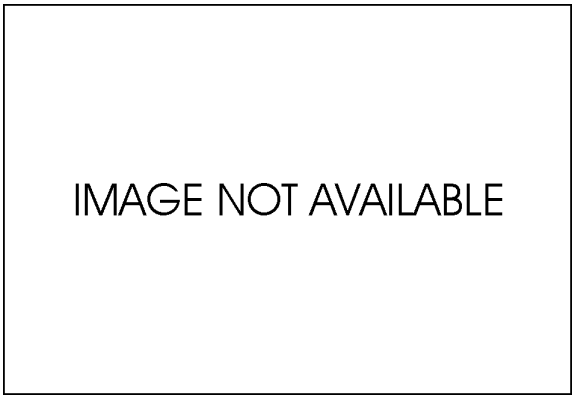

INA 1

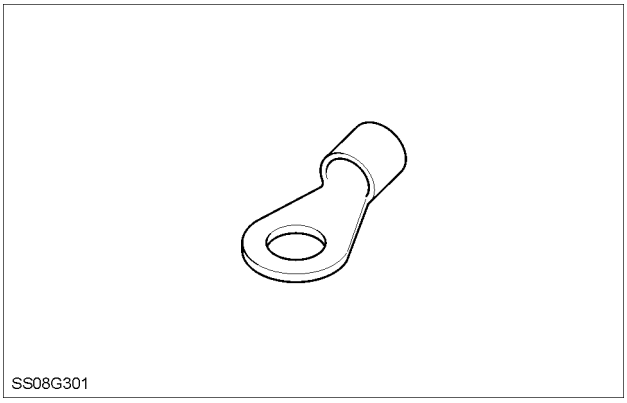

SS08G301 2

RIGHT HAND BEHIND STEPS

https://tractormanualz.com/

Connector - Component diagram 65

X654 BRAKE LUBRICATION CONTROL SOLENOID

POS.	WIRE NUMBER	CIRCUIT REFERENCE
1	7586 (U)	PARKLOCK SOLENOID
2	57EE (B)	EARTH (ALL)

NOTE: *For the wiring color code refer to,* ***Wiring harness - Overview (A.30.A)****.*

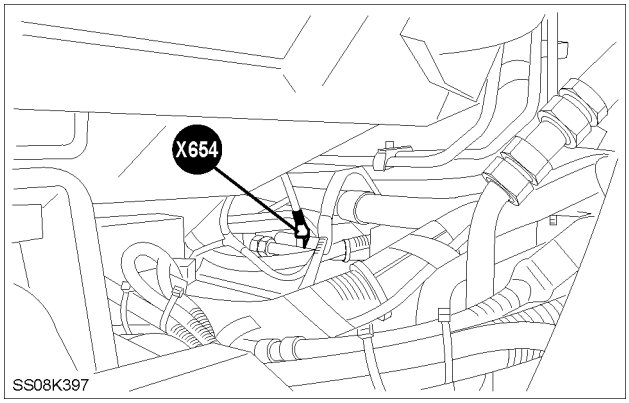

SS08K397 1

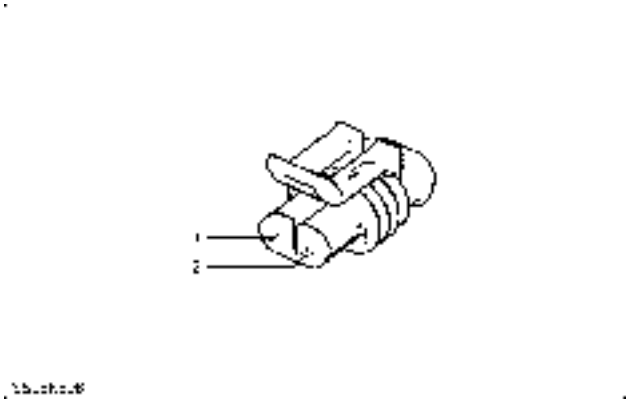

SS08K508 2

REAR LEFT HAND AXLE

X657 ISO BUS IMPLEMENT SOCKET (REAR)

POS.	WIRE NUMBER	CIRCUIT REFERENCE
1	5920B (R)	ISO BUS CAN SUPPLY POSITIVE
2	5900B (Y)	ISO BUS CAN SIGNAL LOW
3	5915B (B)	ISO BUS CAN SUPPLY GROUND
4	5910B (G)	ISO BUS CAN SIGNAL HIGH

NOTE: *For the wiring color code refer to,* ***Wiring harness - Overview (A.30.A)****.*

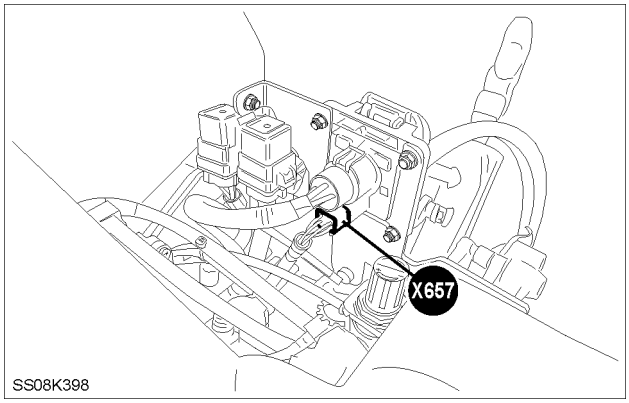

SS08K398 3

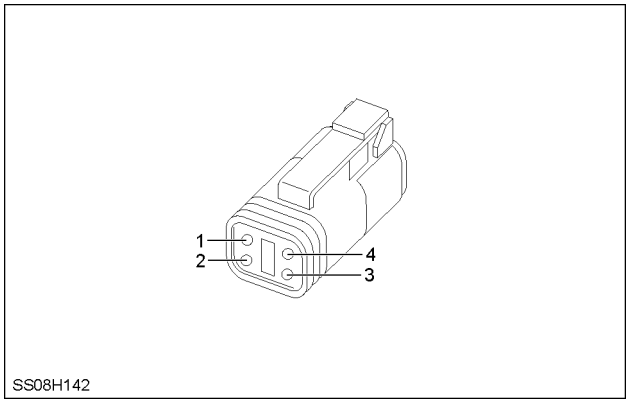

SS08H142 4

REAR OF TRACTOR TOP OF TRANSMISSION

https://tractormanualz.com/

X659 LINK LEVEL (EXTERNAL CONNECTION)

POS.	WIRE NUMBER	CIRCUIT REFERENCE
1	57EY (B)	EARTH (ALL)
2	4055 (W)	LINK LEVEL TOP LINK EXTEND SOLENOID
3	4056 (W)	LINK LEVEL TOP LINK RETRACT SOLENOID
4	4057 (W)	LINK LEVEL RIGHT LINK RAISE SOLENOID
5	4058 (W)	LINK LEVEL RIGHT LINK LOWER SOLENOID
6	4054 (W)	LINK LEVEL DUMP SOLENOID

NOTE: *For the wiring color code refer to,* ***Wiring harness - Overview (A.30.A)****.*

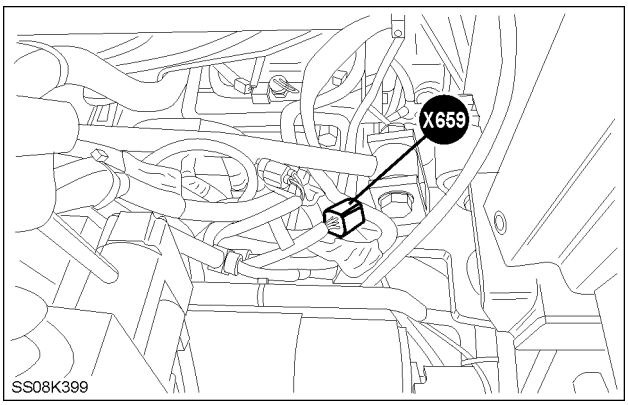

SS08K399 5

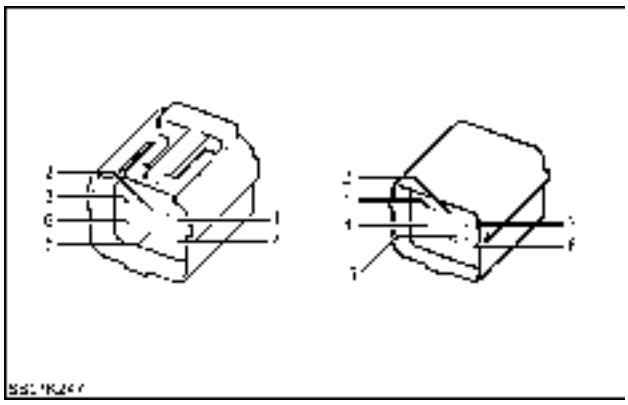

SS07K247 6

REAR OF TRACTOR UNDERNEATH CAB

https://tractormanualz.com/

Connector - Component diagram 66

X660 ISO IMPLEMENT CONNECTOR

POS.	WIRE NUMBER	CIRCUIT REFERENCE
1	5920B (R)	ISO BUS CAN SUPPLY POSITIVE
2	5900B (Y)	ISO BUS CAN SIGNAL LOW
3	5915B (B)	ISO BUS CAN SUPPLY GROUND
4	5910B (G)	ISO BUS CAN SIGNAL HIGH
5	5970A (O)	ISO BUS ECU SIGNAL
6	5980 (U)	ISO BUS IMPLEMENT SIGNAL

NOTE: *For the wiring color code refer to,* ***Wiring harness - Overview (A.30.A)****.*

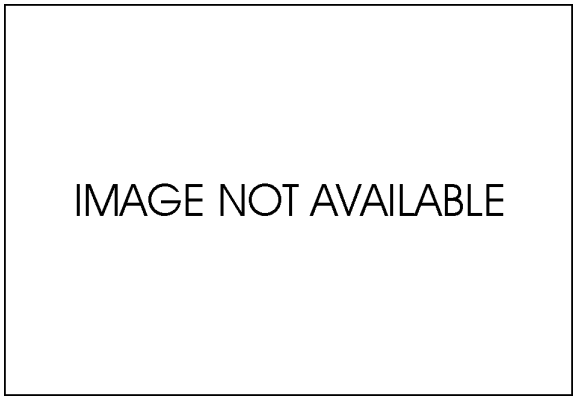

INA 1

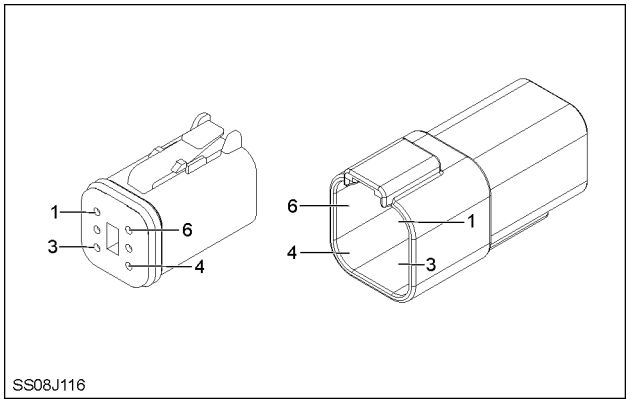

SS08J116 2

RIGHT HAND TOP OF TRANSMISSION

X661 HIGH FLOW PUMP (DETECTION)

POS.	WIRE NUMBER	CIRCUIT REFERENCE
1	5830 (U)	HIGH FLOW PUMP LINK

NOTE: *For the wiring color code refer to,* ***Wiring harness - Overview (A.30.A)****.*

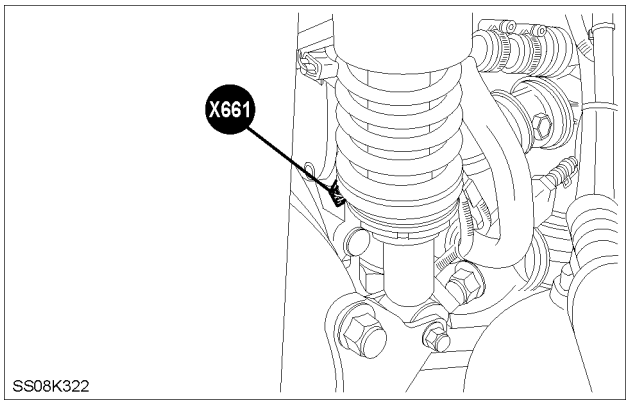

SS08K322 3

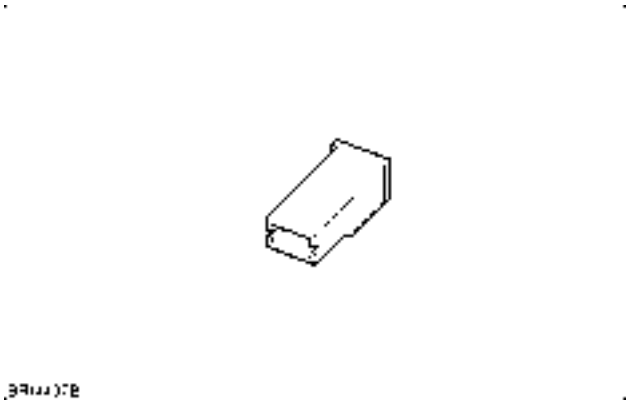

BRI4437B 4

REAR RIGHT HAND TRANSMISSION

https://tractormanualz.com/

X662 FRONT AXLE POSITION SENSOR

POS.	WIRE NUMBER	CIRCUIT REFERENCE
1	3220 (O)	AXLE HEIGHT SENSOR 5V REF
2	3230 (O)	AXLE HEIGHT SENSOR POSITION
3	60 (B)	SENSOR GROUND

NOTE: *For the wiring color code refer to,* ***Wiring harness - Overview (A.30.A)****.*

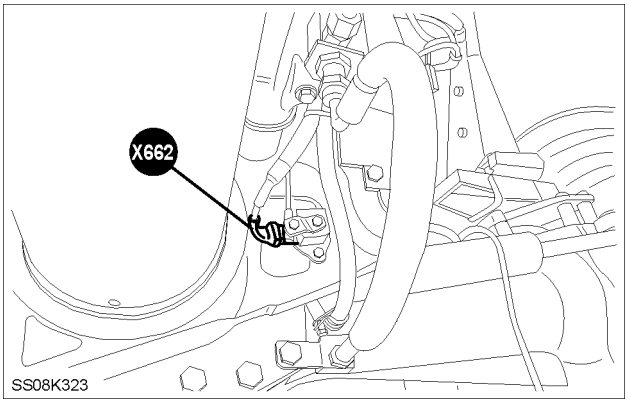

SS08K323 5

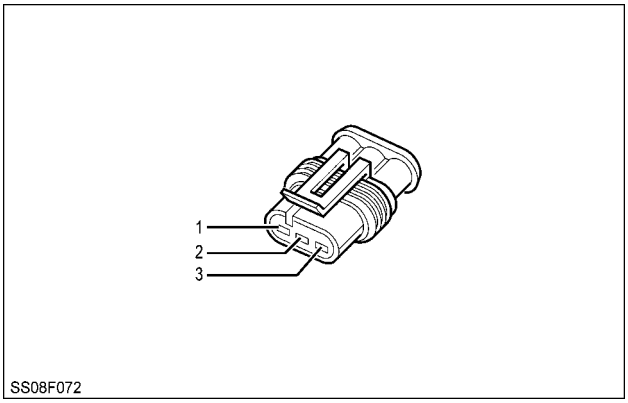

SS08F072 6

RIGHT HAND FRONT AXLE

X663 ELECTRICAL BATTERY ISOLATOR PLUS 30

POS.	WIRE NUMBER	CIRCUIT REFERENCE
1	1AA (R)	BATTERY SUPPLY

NOTE: *For the wiring color code refer to,* ***Wiring harness - Overview (A.30.A)****.*

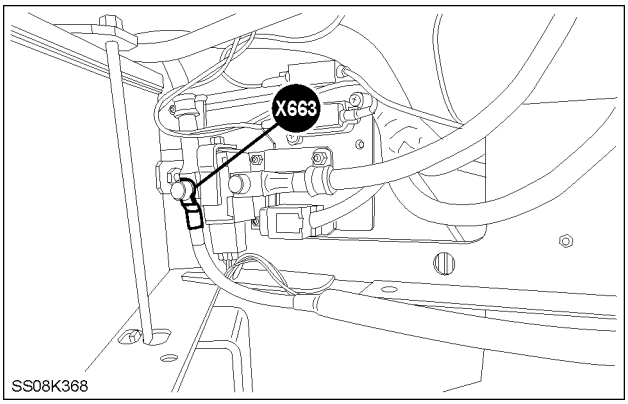

SS08K368 7

BRI4474B 8

RIGHT HAND BEHIND STEPS

https://tractormanualz.com/

X664 ELECTRICAL BATTERY ISOLATOR FUSE PF3

POS.	WIRE NUMBER	CIRCUIT REFERENCE
1	1B (R)	BATTERY SUPPLY
2	1C R)	BATTERY SUPPLY

NOTE: *For the wiring color code refer to,* ***Wiring harness - Overview (A.30.A)****.*

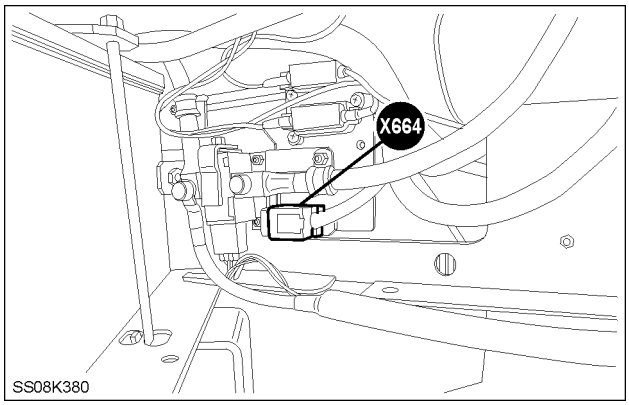

SS08K380 9

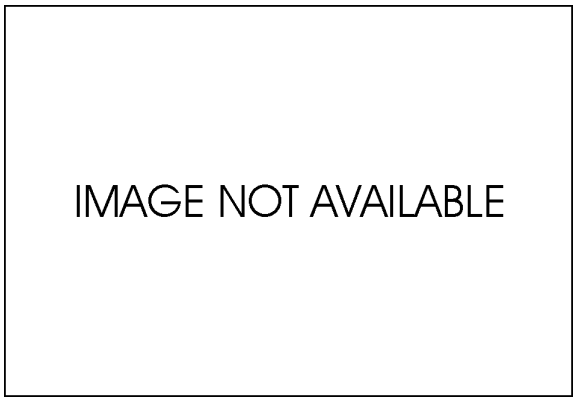

INA 10

RIGHT HAND BEHIND STEPS

X665 BATTERY TO CAB. PLUS SUPPLY

POS.	WIRE NUMBER	CIRCUIT REFERENCE
1	1A (R) / 1B (R)	BATTERY SUPPLY
2	160A (U) / -	BATTERY SUPPLY ELECTRONICS

NOTE: *For the wiring color code refer to,* ***Wiring harness - Overview (A.30.A)****.*

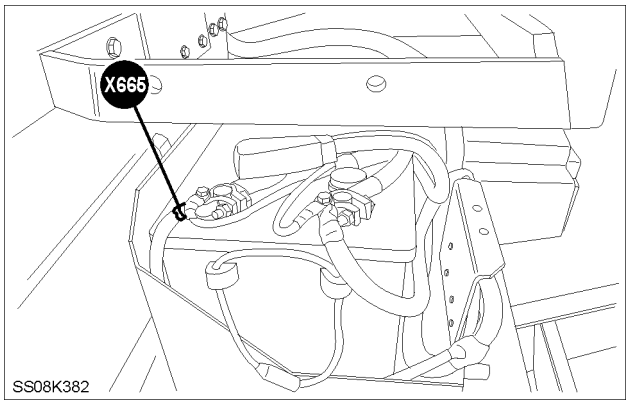

SS08K382 11

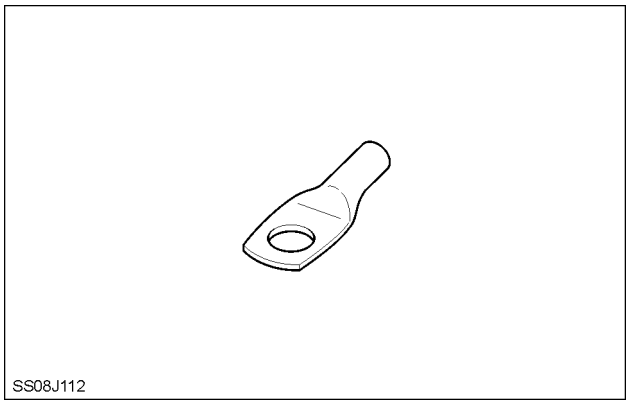

SS08J112 12

RIGHT HAND BEHIND STEPS

https://tractormanualz.com/

Connector - Component diagram 67

X671 LINK LEVELLING VALVE 1

POS.	WIRE NUMBER	CIRCUIT REFERENCE
1	4054 (W)	LINK LEVEL DUMP SOLENOID
2	57MJ (B)	EARTH (ALL)

NOTE: *For the wiring color code refer to,* ***Wiring harness - Overview (A.30.A)****.*

SS08K383 1

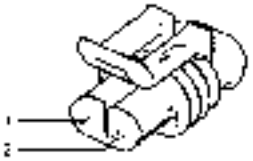

SS08K508 2

REAR AXLE

X672 LINK LEVELLING VALVE 2

POS.	WIRE NUMBER	CIRCUIT REFERENCE
1	4055 (W)	LINK LEVEL TOP LINK EXTEND SOLENOID
2	57MK (B)	EARTH (ALL)

NOTE: *For the wiring color code refer to,* ***Wiring harness - Overview (A.30.A)****.*

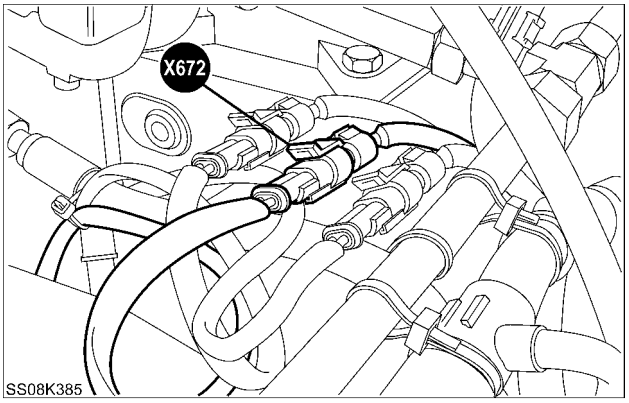

SS08K385 3

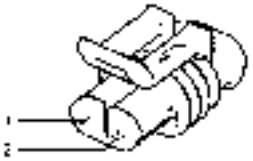

SS08K508 4

REAR AXLE

https://tractormanualz.com/

X673 LINK LEVELLING VALVE 3

POS.	WIRE NUMBER	CIRCUIT REFERENCE
1	4054 (W)	LINK LEVEL DUMP SOLENOID
2	57ML (B)	EARTH (ALL)

NOTE: *For the wiring color code refer to,* ***Wiring harness - Overview (A.30.A)****.*

SS08K388 5

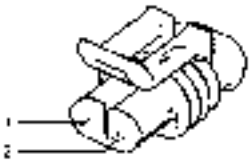

SS08K508 6

REAR AXLE

X674 LINK LEVELLING VALVE 4

POS.	WIRE NUMBER	CIRCUIT REFERENCE
1	4057 (W)	LINK LEVEL RIGHT LINK RAISE SOLENOID
2	57MM (B)	EARTH (ALL)

NOTE: *For the wiring color code refer to,* ***Wiring harness - Overview (A.30.A)****.*

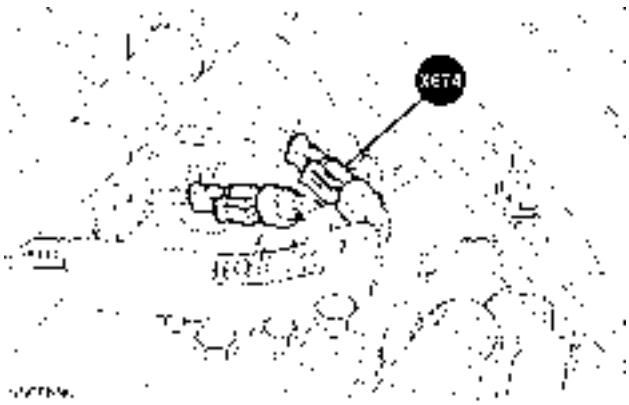

SS08K390 7

SS08K508 8

REAR AXLE

https://tractormanualz.com/

X675 LINK LEVELLING VALVE 5

POS.	WIRE NUMBER	CIRCUIT REFERENCE
1	4058 (W)	LINK LEVEL RIGHT LINK LOWER SOLENOID
2	57MN (B)	EARTH (ALL)

NOTE: *For the wiring color code refer to,* ***Wiring harness - Overview (A.30.A)****.*

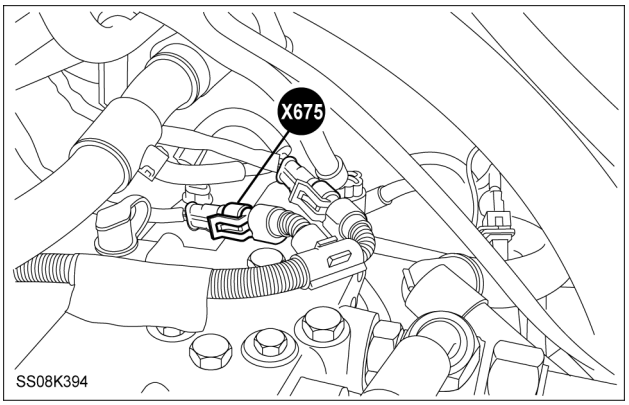

SS08K394 9

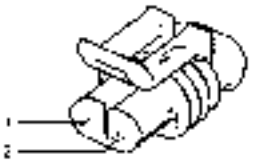

SS08K508 10

REAR AXLE

https://tractormanualz.com/

Connector - Component diagram 68

X681 HYDRAULICS MASTER SWITCH

POS.	WIRE NUMBER	CIRCUIT REFERENCE
1	5210 (O)	EDC VALVE ENABLE
2	7000M (U)	TRANS CONTROL SUPPLY
3	5597 (S)	EHR MASTER ENABLE
5	5835(S)	HYDRAULIC MASTER SWITCH HIGH FLOW PUMP LINK
7	57PV (B)	EARTH (ALL)
8	1012L (R)	ILLUMINATION
9	57RP (B)	EARTH (ALL)

NOTE: *For the wiring color code refer to,* ***Wiring harness - Overview (A.30.A)****.*

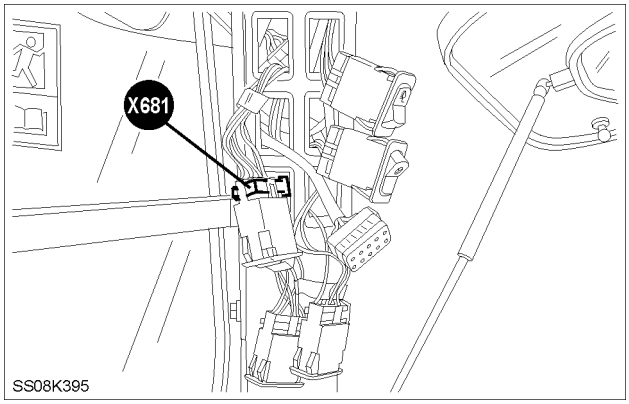

SS08K395 1

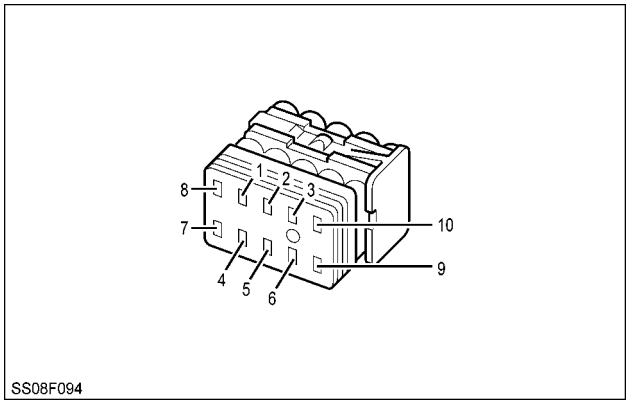

SS08F094 2

RIGHT HAND C PILLAR

X683A HEATED SCREEN B+

POS.	WIRE NUMBER	CIRCUIT REFERENCE
1	1P (R)	BATTERY SUPPLY
2	1N (R)	BATTERY SUPPLY

NOTE: *For the wiring color code refer to,* ***Wiring harness - Overview (A.30.A)****.*

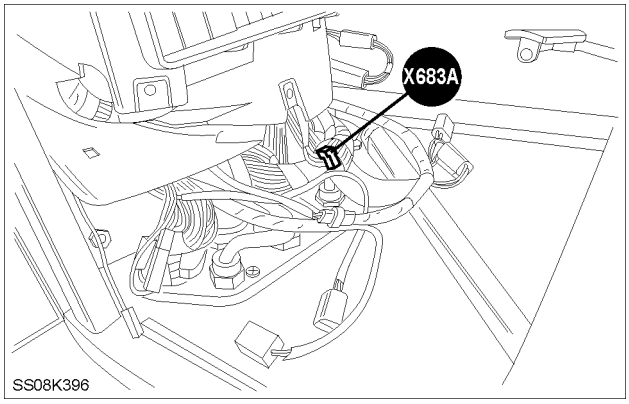

SS08K396 3

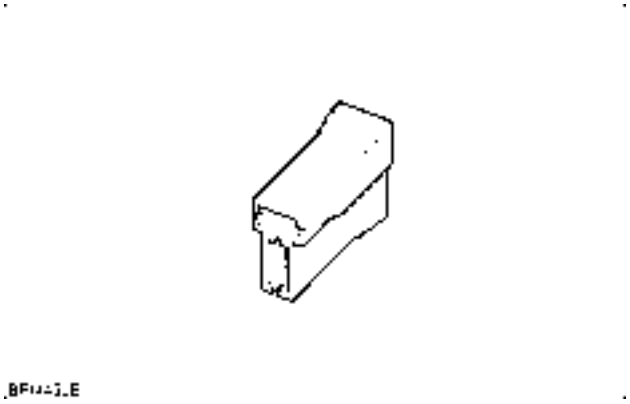

BRI4459B 4

BEHIND RIGHT HAND TRIM

https://tractormanualz.com/

X683B HEATED SCREEN D+

POS.	WIRE NUMBER	CIRCUIT REFERENCE
1	1006B (N) / 1006D (N)	ALTERNATOR WARNING LAMP

NOTE: *For the wiring color code refer to,* ***Wiring harness - Overview (A.30.A)****.*

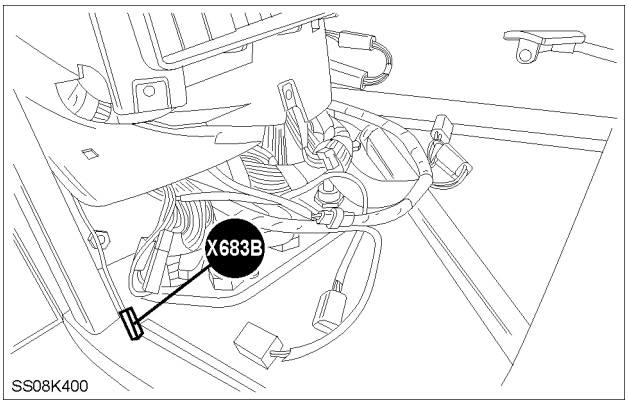

SS08K400 5

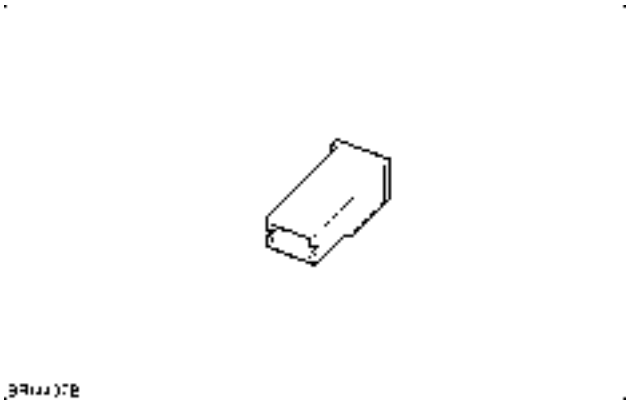

BRI4437B 6

BEHIND RIGHT HAND TRIM

X684 FRONT HITCH DETECT

POS.	WIRE NUMBER	CIRCUIT REFERENCE
1	5200L (N)	EDC VALVE SUPPLY
2	5840 (W)	FRONT HITCH DETECT INPUT

NOTE: *For the wiring color code refer to,* ***Wiring harness - Overview (A.30.A)****.*

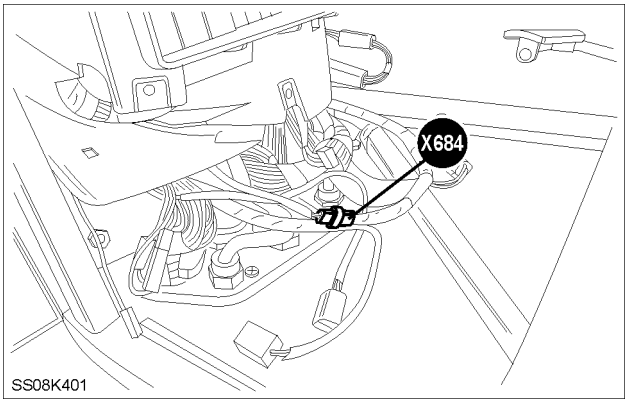

SS08K401 7

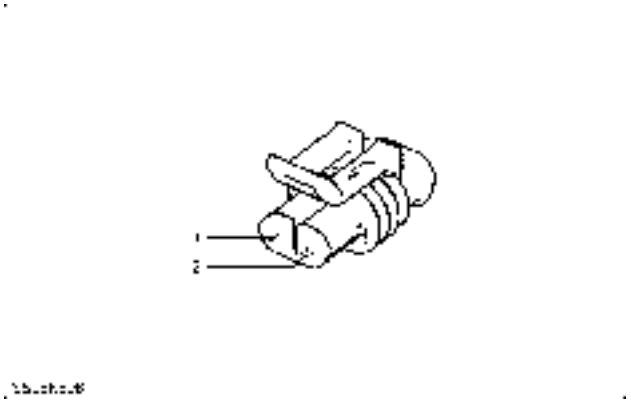

SS08K508 8

BEHIND RIGHT HAND TRIM

https://tractormanualz.com/

X688 EXTREMITY LAMP LEFT HAND

POS.	WIRE NUMBER	CIRCUIT REFERENCE
1	50A (G)	LEFT HAND TURN SIGNAL
2	57MS (B)	EARTH (ALL)

NOTE: *For the wiring color code refer to,* ***Wiring harness - Overview (A.30.A)****.*

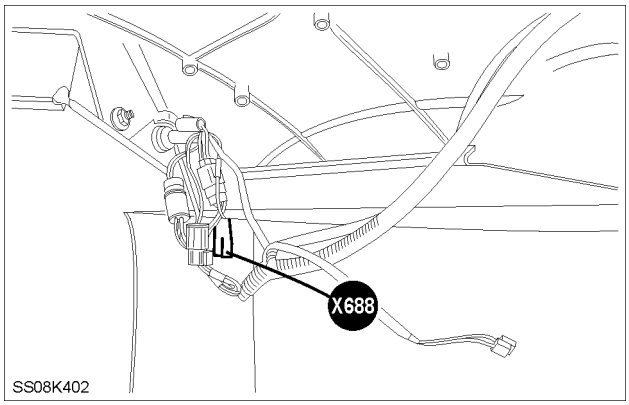

SS08K402 9

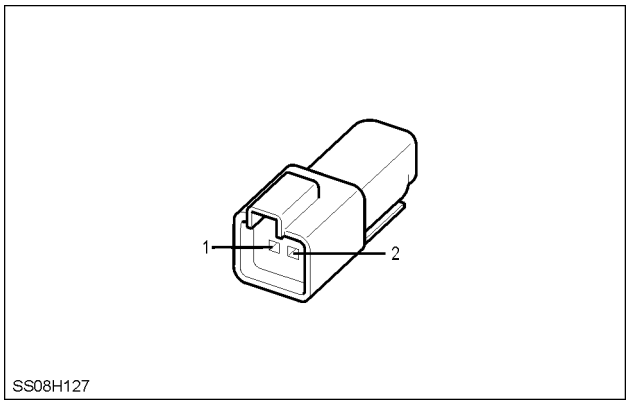

SS08H127 10

LEFT HAND REAR FENDER

X689 EXTREMITY LAMP RIGHT HAND

POS.	WIRE NUMBER	CIRCUIT REFERENCE
1	49A (G)	RIGHT HAND TURN SIGNAL
2	57MR (B)	EARTH (ALL)

NOTE: *For the wiring color code refer to,* ***Wiring harness - Overview (A.30.A)****.*

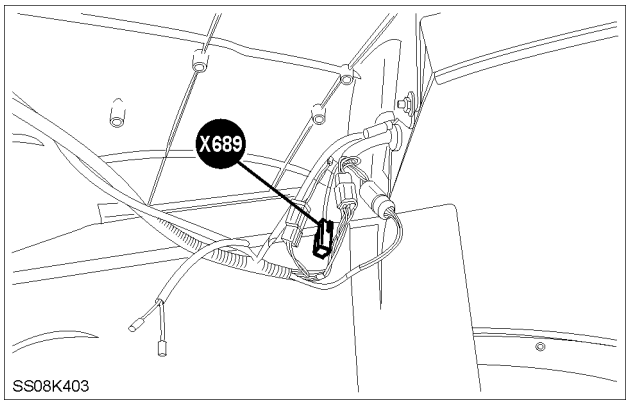

SS08K403 11

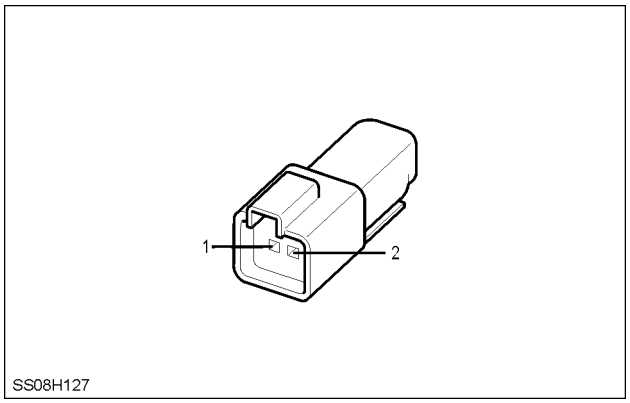

SS08H127 12

RIGHT HAND REAR FENDER

https://tractormanualz.com/

Connector - Component diagram 69

X694 AIR CON POWER

POS.	WIRE NUMBER	CIRCUIT REFERENCE
1	982B (G) / (R)	BLOWER MOTOR FEED
2	982C (G) / (R)	BLOWER MOTOR FEED
3	57NZ (B)	EARTH (ALL)
4	57PA (B)	EARTH (ALL)

NOTE: *For the wiring color code refer to,* ***Wiring harness - Overview (A.30.A)****.*

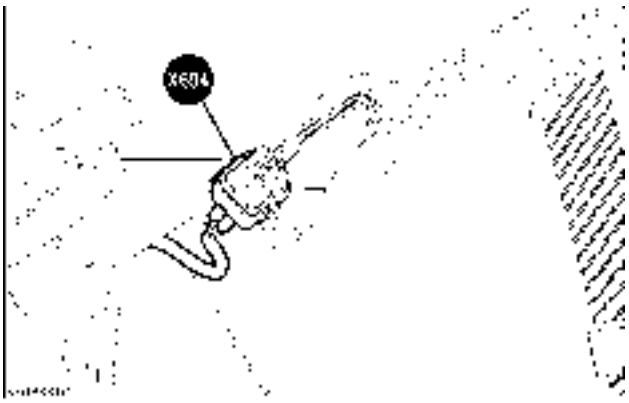

SS08K404 1

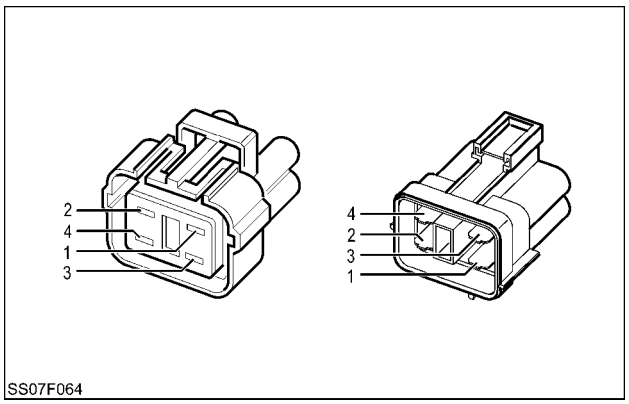

SS07F064 2

LEFT HAND REAR TRACTOR BEHIND OPERATOR'S SEAT

https://tractormanualz.com/

X695 AIR CON CONTROL

MANUAL

POS.	WIRE NUMBER	CIRCUIT REFERENCE
1	5420M (G)	CAN L
2	5400M (Y)	CAN H
3	- / (O/R)	DEFOG OUTPUT
4	2006A (U) / (W)	DE-ICING SWITCH - AIR CONDITIONER
5	2006B (U) / (W/U)	DE-ICING SWITCH - AIR CONDITIONER
6	2005 (O) / (P/R)	AIR CON CLUTCH RELAY

NOTE: *For the wiring color code refer to,* ***Wiring harness - Overview (A.30.A)****.*

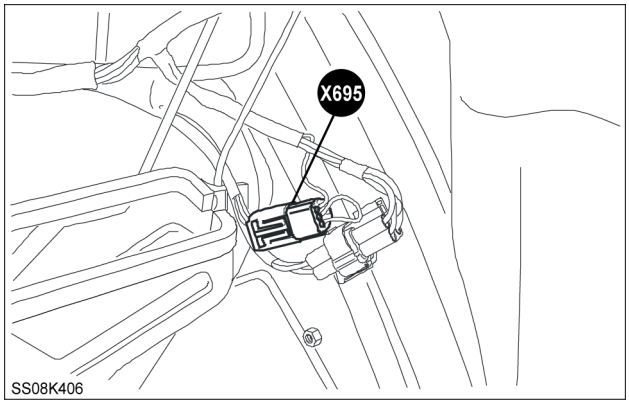

SS08K406 3

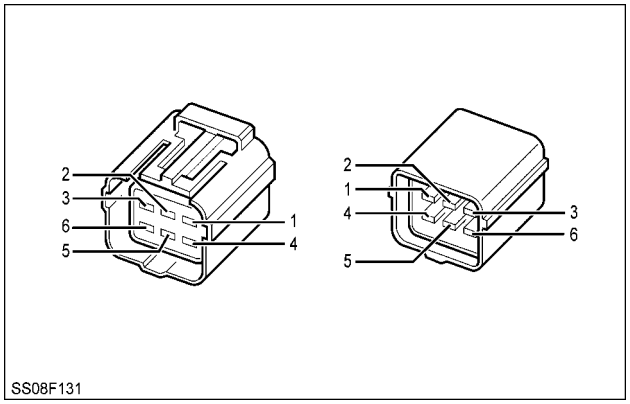

SS08F131 4

LEFT HAND REAR TRACTOR BEHIND OPERATOR'S SEAT

ATC

POS.	WIRE NUMBER	CIRCUIT REFERENCE
1	5420M (G)	CAN L
2	5400M (Y)	CAN H
3	9229 (O/R)	DEFOG OUTPUT
4	2006A (U) / (L)	DE-ICING SWITCH - AIR CONDITIONER
5	2006B (U) / (W)	DE-ICING SWITCH - AIR CONDITIONER
6	2005 (O) / (W)	AIR CON CLUTCH RELAY

NOTE: *For the wiring color code refer to,* ***Wiring harness - Overview (A.30.A)****.*

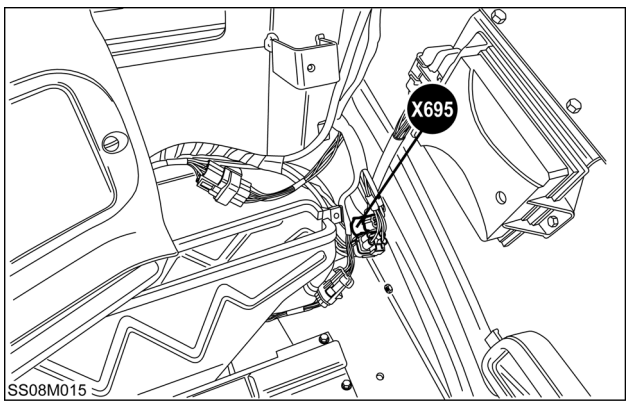

SS08M015 5

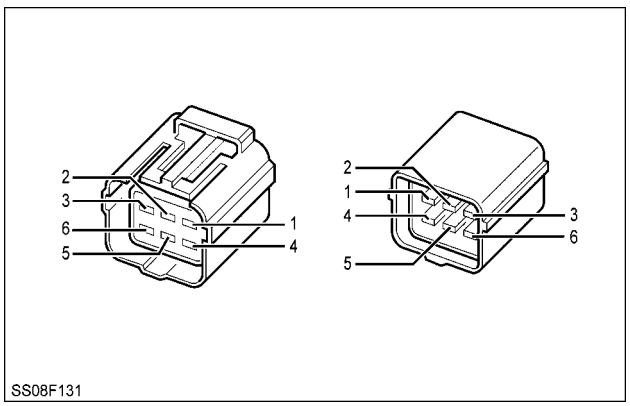

SS08F131 6

LEFT HAND REAR TRACTOR BEHIND OPERATOR'S SEAT

https://tractormanualz.com/

X697 MEHR 1

POS.	WIRE NUMBER	CIRCUIT REFERENCE
1	5515J (S)	EHR +12V IGN.
2	5610H (U)	HTS PROGRAM
3	5500H (R)	EHR CAN HIGH
4	57WC (B)	EARTH (ALL)

NOTE: *For the wiring color code refer to,* ***Wiring harness - Overview (A.30.A)****.*

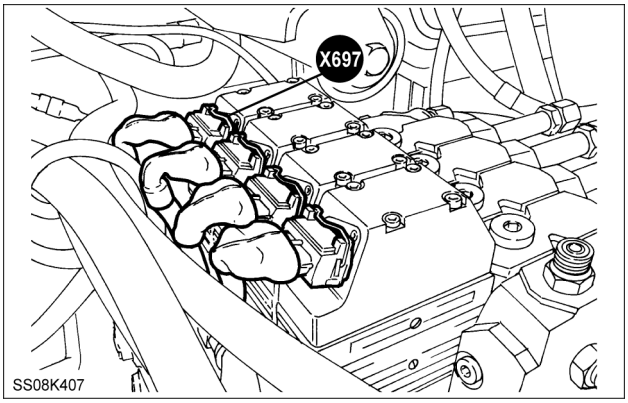

SS08K407 7

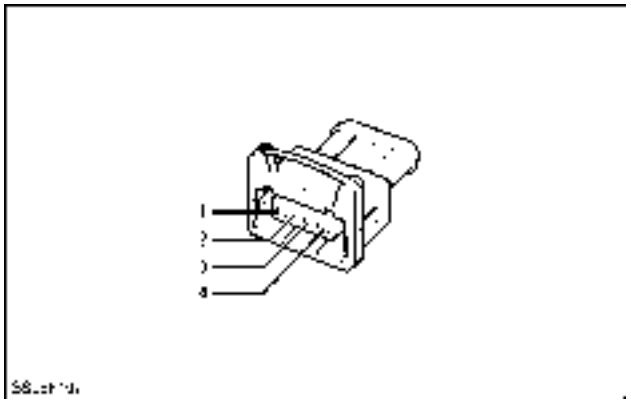

SS08F107 8

RIGHT HAND BEHIND STEPS

X698 MEHR 2

POS.	WIRE NUMBER	CIRCUIT REFERENCE
1	5515K (S)	EHR +12V IGN.
2	5510Q (U)	EHR CAN LOW
3	5500Q (R)	EHR CAN HIGH
4	57MD (B)	EARTH (ALL)

NOTE: *For the wiring color code refer to,* ***Wiring harness - Overview (A.30.A)****.*

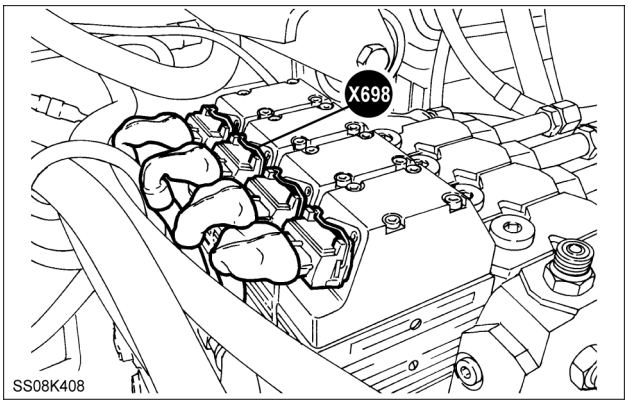

SS08K408 9

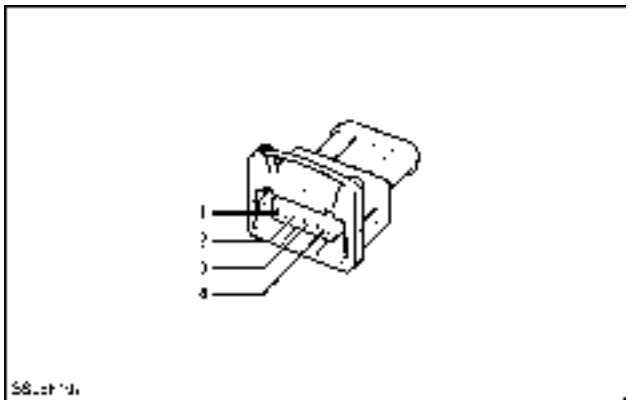

SS08F107 10

RIGHT HAND BEHIND STEPS

https://tractormanualz.com/

X699 MEHR 3

POS.	WIRE NUMBER	CIRCUIT REFERENCE
1	5515L (S)	EHR +12V IGN
2	5510S (U)	EHR CAN LOW
3	5500S (R)	EHR CAN HIGH
4	57WE (B)	EARTH (ALL)

NOTE: *For the wiring color code refer to,* ***Wiring harness - Overview (A.30.A)****.*

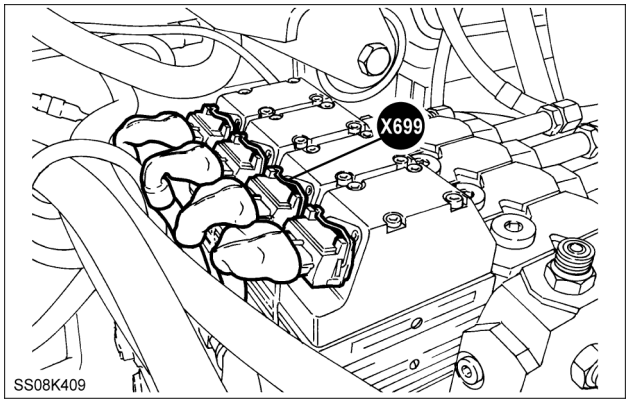

SS08K409 11

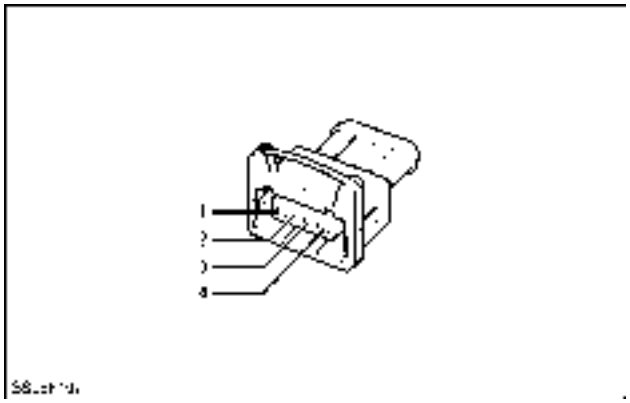

SS08F107 12

RIGHT HAND BEHIND STEPS

https://tractormanualz.com/

Connector - Component diagram 70

X700 MEHR 4

POS.	WIRE NUMBER	CIRCUIT REFERENCE
1	5515M (S)	EHR +12V IGN.
2	5510U (U)	EHR CAN LOW
3	5500U (R)	EHR CAN HIGH
4	57MF (B)	EARTH (ALL)

NOTE: *For the wiring color code refer to,* ***Wiring harness - Overview (A.30.A)****.*

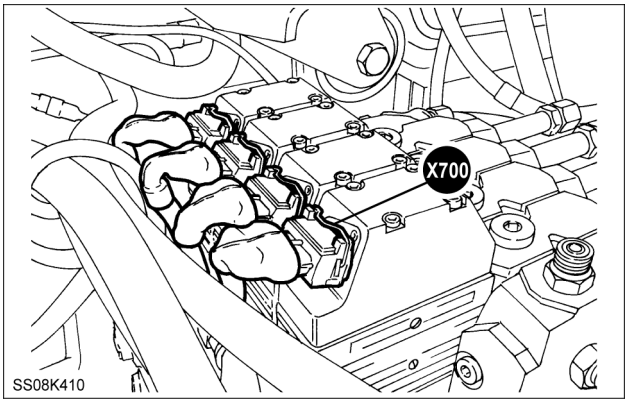

SS08K410 1

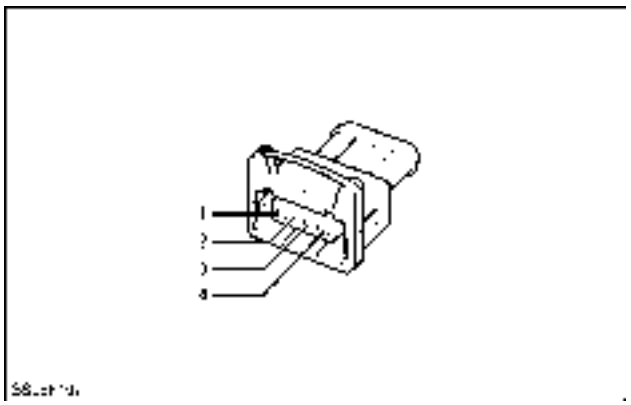

SS08F107 2

RIGHT HAND BEHIND STEPS

X701 SUSPENSION ACCELEROMETER

POS.	WIRE NUMBER	CIRCUIT REFERENCE
1	3235 (TN)	ACCELEROMETER SIGNAL
2	60AG (B/W)	SENSOR GROUND
3	5520D (G)	EHR 5V REF.

NOTE: *For the wiring color code refer to,* ***Wiring harness - Overview (A.30.A)****.*

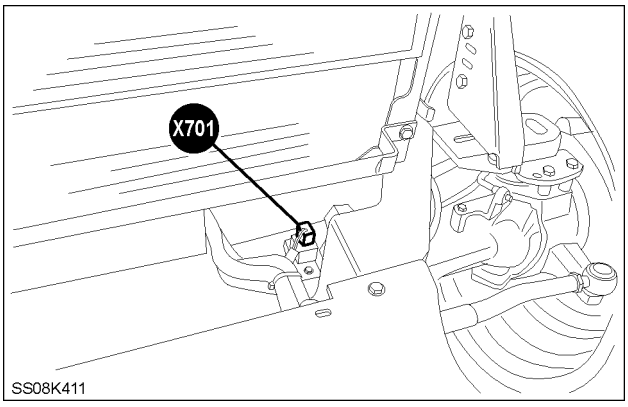

SS08K411 3

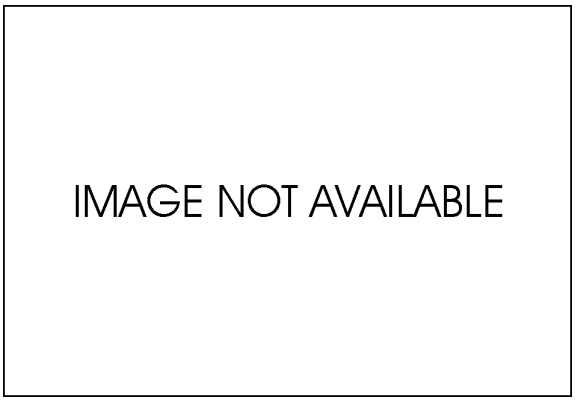

INA 4

FRONT LEFT HAND ENGINE

https://tractormanualz.com/

X702 TERMINATING RESISTOR

POS.	WIRE NUMBER	CIRCUIT REFERENCE
2	5510V (U)	EHR CAN LOW
3	5500V (R)	EHR CAN HIGH

NOTE: *For the wiring color code refer to,* ***Wiring harness - Overview (A.30.A)****.*

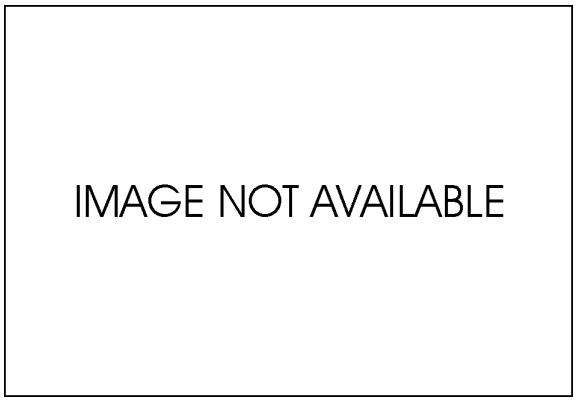

INA 5

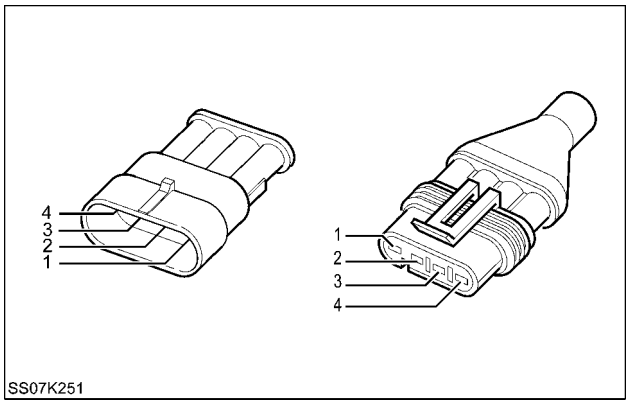

SS07K251 6

RIGHT HAND BEHIND STEPS

X705 TURN RIGHT (TOP)

POS.	WIRE NUMBER	CIRCUIT REFERENCE
1	3163 (O)	AUTO GUIDANCE STEERING SOLENOID VLV R FEED
2	3164 (O)	AUTO GUIDANCE STEERING SOLENOID VLV R RETURN

NOTE: *For the wiring color code refer to,* ***Wiring harness - Overview (A.30.A)****.*

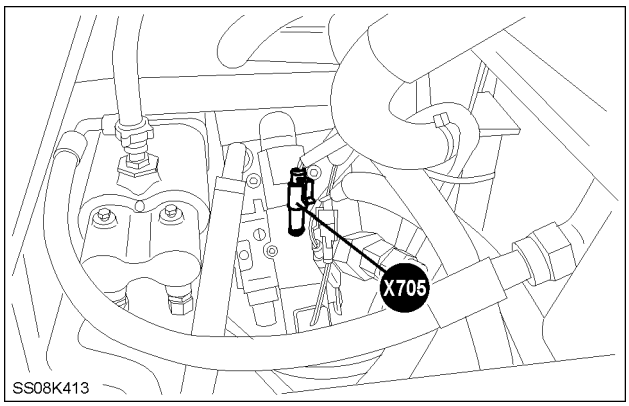

SS08K413 7

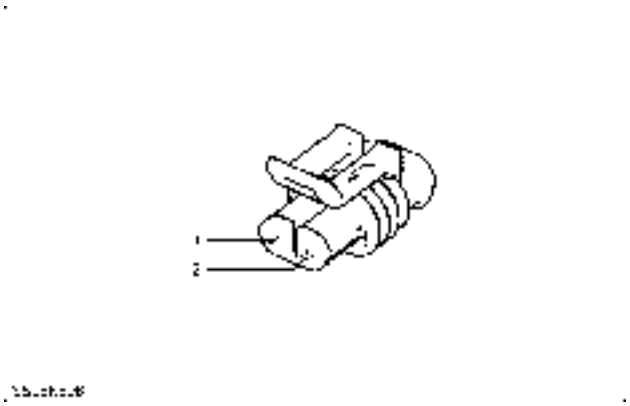

SS08K508 8

REAR TOP OF ENGINE

https://tractormanualz.com/

X706 TURN LEFT (BOTTON)

POS.	WIRE NUMBER	CIRCUIT REFERENCE
1	3165 (O)	AUTO GUIDANCE STEERING SOLENOID VLV L FEED
2	3166 (O)	AUTO GUIDANCE STEERING SOLENOID VLV L RETURN

NOTE: *For the wiring color code refer to,* ***Wiring harness - Overview (A.30.A)****.*

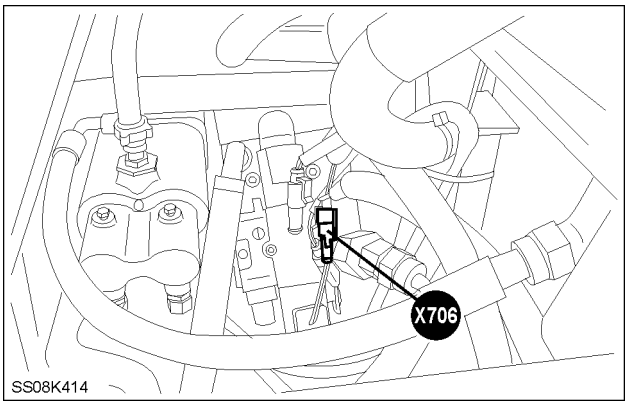

SS08K414 9

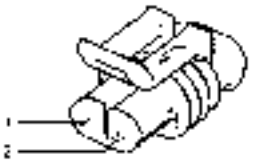

SS08K508 10

REAR TOP OF ENGINE

X707 SOLENOIDS CONNECTOR

POS.	WIRE NUMBER	CIRCUIT REFERENCE
1	3163 (O)	AUTO GUIDANCE STEERING SOLENOID VLV R FEED
2	3164 (O)	AUTO GUIDANCE STEERING SOLENOID VLV R RETURN
3	3165 (O)	AUTO GUIDANCE STEERING SOLENOID VLV L FEED
4	3166 (O)	AUTO GUIDANCE STEERING SOLENOID VLV L RETURN
5	3168 (O)	AUTO GUIDANCE DUMP SOLENOID FEED (HSD)
6	3169 (O)	AUTO GUIDANCE DUMP SOLENOID RETURN (CURSEN)

NOTE: *For the wiring color code refer to,* ***Wiring harness - Overview (A.30.A)****.*

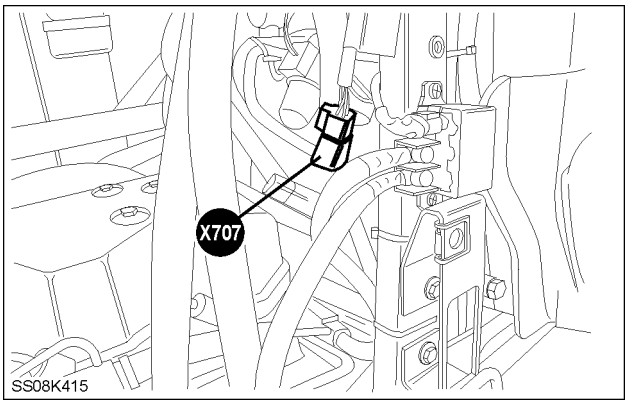

SS08K415 11

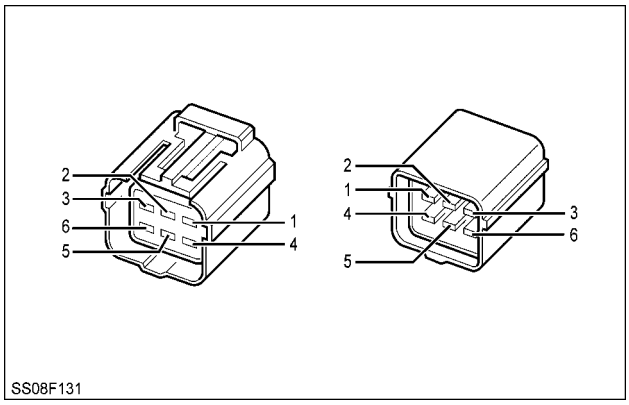

SS08F131 12

LEFT HAND ENGINE

https://tractormanualz.com/

X709 STEERING PRESSURE SENDER

POS.	WIRE NUMBER	CIRCUIT REFERENCE
A	3161 (O)	AUTO GUIDANCE STEERING PRESS SENSOR RETURN
B	3167 (O)	AUTO GUIDANCE STEERING PRESS SNSR +5V REF
C	3160 (O)	AUTO GUIDANCE STEERING PRESS SENSOR SIGNAL

NOTE: *For the wiring color code refer to,* ***Wiring harness - Overview (A.30.A)****.*

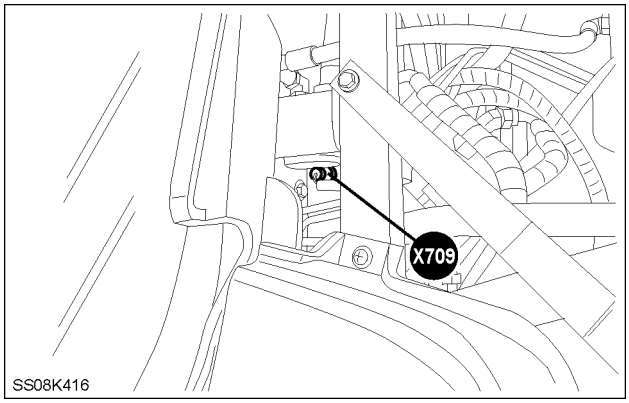

SS08K416 13

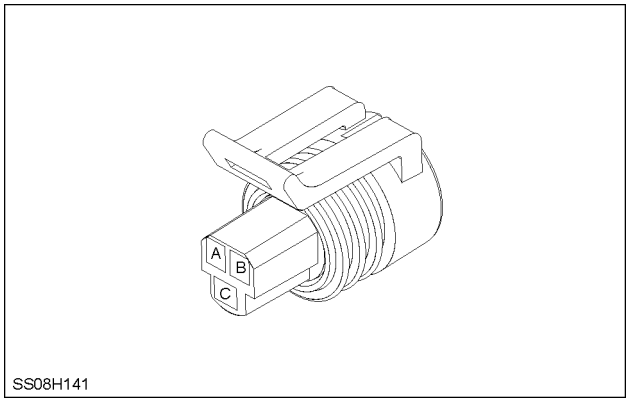

SS08H141 14

REAR TOP OF ENGINE

https://tractormanualz.com/

Connector - Component diagram 71

X710 AUTO GUIDANCE SOLENOIDS

POS.	WIRE NUMBER	CIRCUIT REFERENCE
1	3169 (O)	AUTO GUIDANCE DUMP SOLENOID RETURN (CURSEN)
2	3168 (O)	AUTO GUIDANCE DUMP SOLENOID FEED (HSD)
3	3163A (O) / 3163 (O)	AUTO GUIDANCE STEERING SOLENOID VLV R FEED
4	3164 (O)	AUTO GUIDANCE STEERING SOLENOID VLV R RETURN
5	3165A (O) / 3165 (O)	AUTO GUIDANCE STEERING SOLENOID VLV L FEED
6	3166 (O)	AUTO GUIDANCE STEERING SOLENOID VLV L RETURN

NOTE: *For the wiring color code refer to,* ***Wiring harness - Overview (A.30.A)****.*

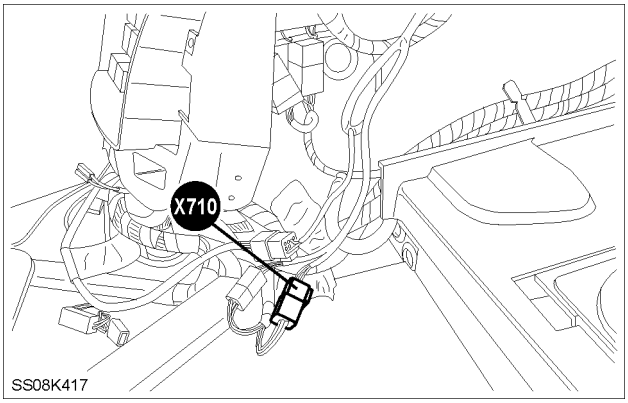

SS08K417 1

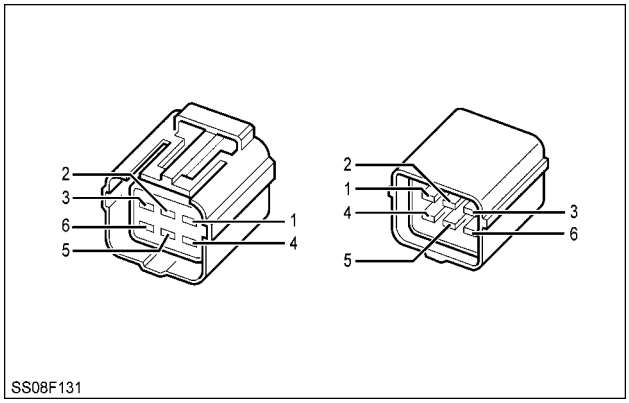

SS08F131 2

BEHIND RIGHT HAND TRIM

X711 AUTO GUIDANCE SENSORS

POS.	WIRE NUMBER	CIRCUIT REFERENCE
1	3100 (G)	STEERING SENSOR +5V
2	3120 (K)	STEERING SENSOR SIGNAL
3	3140 (LTG)	STEERING SENSOR GROUND
4	3160 (O)	AUTO GUIDANCE STEERING PRESS SENSOR SIGNAL
5	3161 (O)	AUTO GUIDANCE STEERING PRESS SENSOR RETURN
6	3167 (O)	AUTO GUIDANCE STEERING PRESS SNSR +5V REF

NOTE: *For the wiring color code refer to,* ***Wiring harness - Overview (A.30.A)****.*

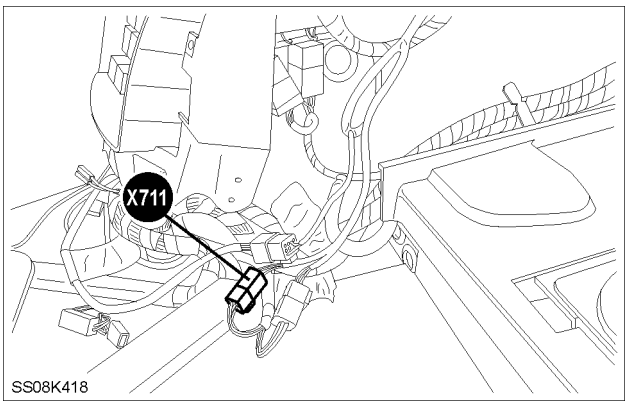

SS08K418 3

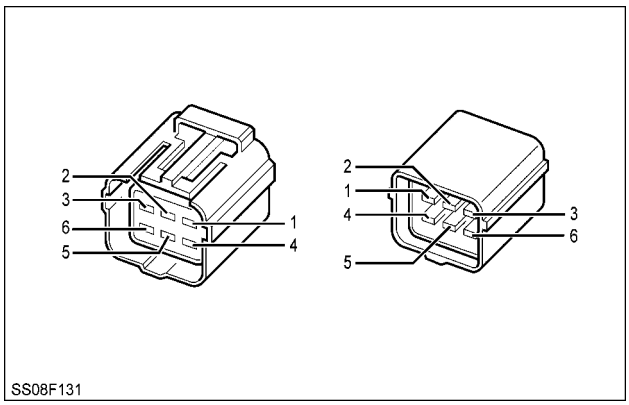

SS08F131 4

BEHIND RIGHT HAND TRIM

https://tractormanualz.com/

X712 AG DUMP SOLENOID

POS.	WIRE NUMBER	CIRCUIT REFERENCE
1	3168 (O)	AUTO GUIDANCE DUMP SOLENOID FEED (HSD)
2	3169 (O)	AUTO GUIDANCE DUMP SOLENOID RETURN (CURSEN)

NOTE: *For the wiring color code refer to,* ***Wiring harness - Overview (A.30.A)****.*

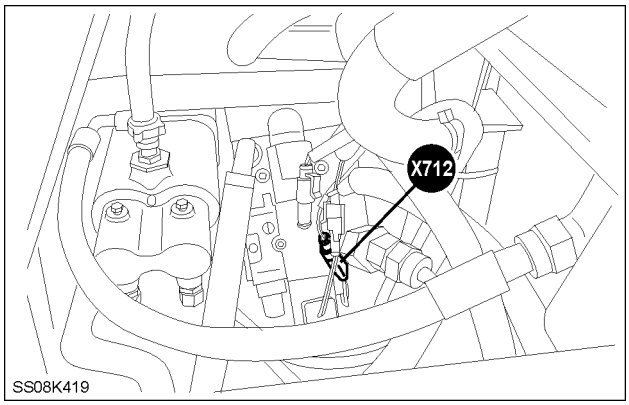

SS08K419 5

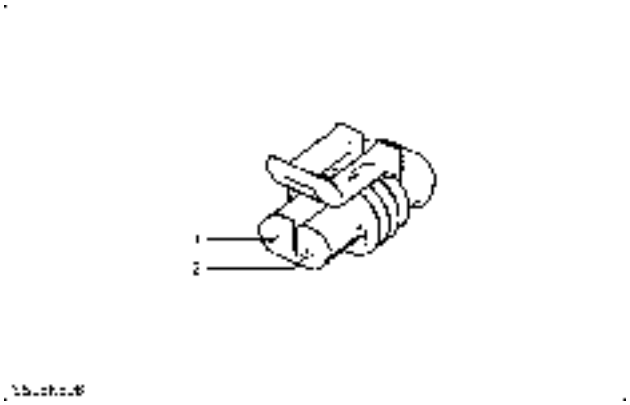

SS08K508 6

REAR TOP LEFT HAND ENGINE

X714 AUTO GUIDANCE CONTROL SWITCH

POS.	WIRE NUMBER	CIRCUIT REFERENCE
2	5200AK (N)	EDC VALVE SUPPLY
3	3185 (N)	AUTO GUIDANCE REMOTE ENGAGE
5	5200AL (N)	EDC VALVE SUPPLY
6	3187A (N)	AUTO GUIDANCE ROADING SELECT
7	57NB (B)	EARTH (ALL)

NOTE: *For the wiring color code refer to,* ***Wiring harness - Overview (A.30.A)****.*

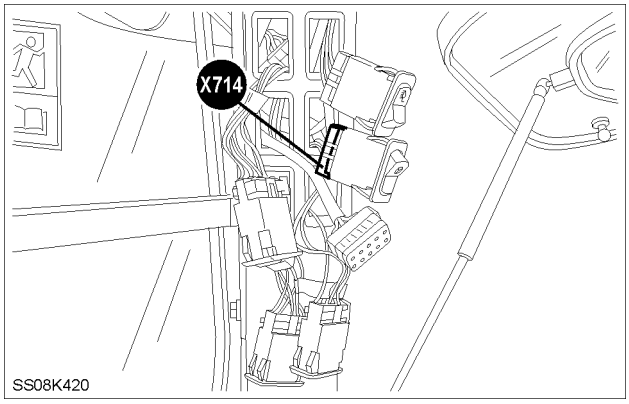

SS08K420 7

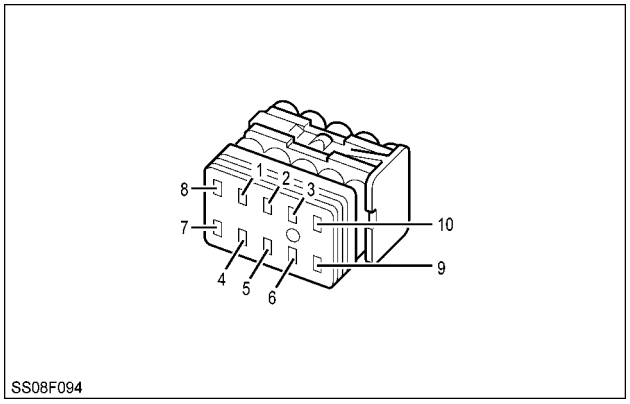

SS08F094 8

RIGHT HAND C-PILLAR

https://tractormanualz.com/

X715 ROOF CONNECTOR DATA 1

POS.	WIRE NUMBER	CIRCUIT REFERENCE
1	5500T (R) / 5500R (R)	EHR CAN HIGH
2	5510T (U) / 5510R (U)	EHR CAN LOW
5	7655G (Y)	RS232 GROUND

NOTE: *For the wiring color code refer to,* ***Wiring harness - Overview (A.30.A)****.*

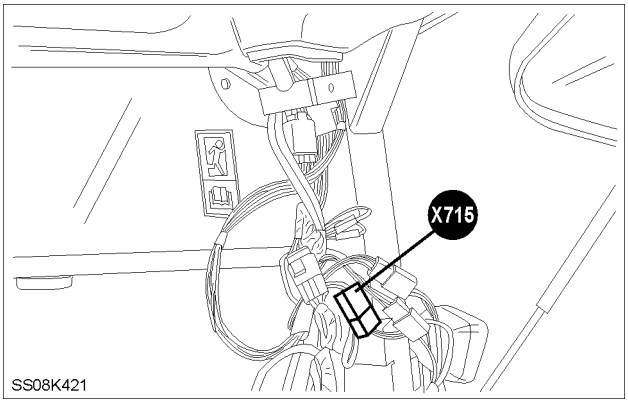

SS08K421 9

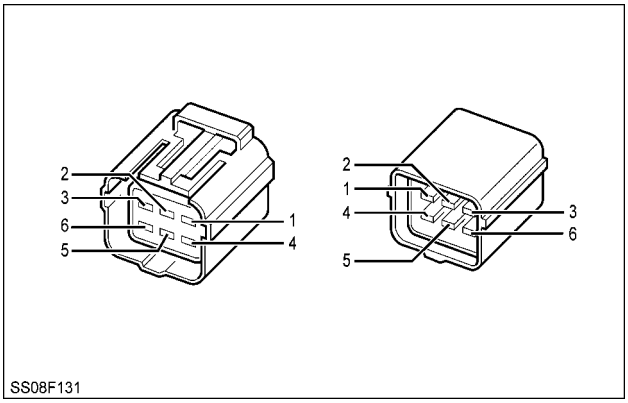

SS08F131 10

BEHIND RIGHT HAND C-PILLAR COVER TOP

https://tractormanualz.com/

X716 CERES CONTROLLER A

POS.	WIRE NUMBER	CIRCUIT REFERENCE
1	57NC (B)	EARTH (ALL)
2	7640G (TN)	DIAGNOSTIC PLUG RS232 IN
3	5500P (R)	EHR CAN HIGH
6	3185 (N)	AUTO GUIDANCE REMOTE ENGAGE
9	3140 (LTG)	STEERING SENSOR GROUND
10	3163 (O)	AUTO GUIDANCE STEERING SOLENOID VLV R FEED
11	5200AJ (N)	EDC VALVE SUPPLY
12	7655G (Y)	RS232 GROUND
13	5510P (U)	EHR CAN LOW
18	3120 (K)	STEERING SENSOR SIGNAL
19	3160 (O)	AUTO GUIDANCE STEERING PRESS SENSOR SIGNAL
20	3165 (O)	AUTO GUIDANCE STEERING SOLENOID VLV L FEED
21	3186 (S)	CERES PPS IN
29	3167 (O)	AUTO GUIDANCE STEERING PRESS SNSR +5V REF
30	3164 (O)	AUTO GUIDANCE STEERING SOLENOID VLV R RETURN
31	7650G (W)	DIAGNOSTIC PLUG RS232 OUT
38	3100 (G)	STEERING SENSOR +5V
39	3161 (O)	AUTO GUIDANCE STEERING PRESS SENSOR RETURN
40	3166 (O)	AUTO GUIDANCE STEERING SOLENOID VLV L RETURN

NOTE: *For the wiring color code refer to,* ***Wiring harness - Overview (A.30.A)****.*

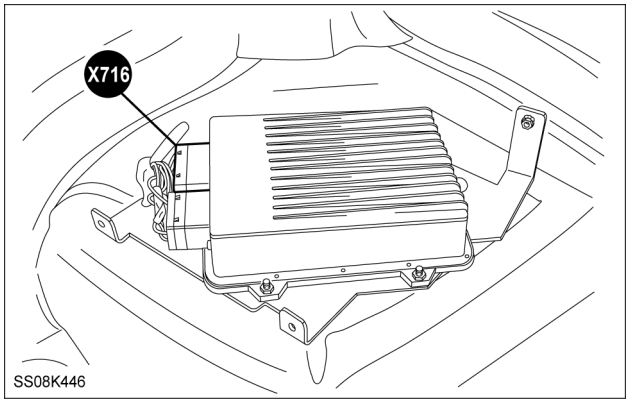

SS08K446 11

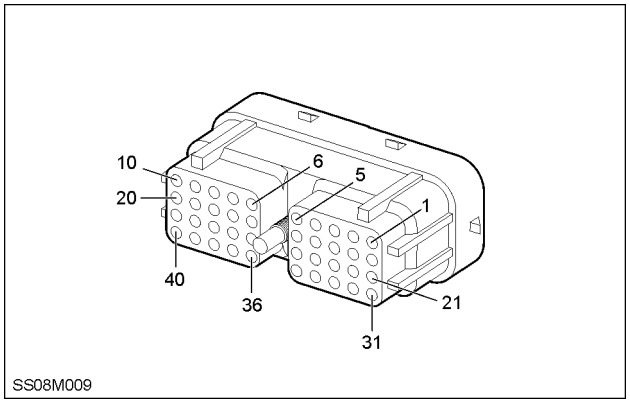

SS08M009 12

REAR LEFT HAND CAB BENEATH STORAGE TRAY

https://tractormanualz.com/

X717 DATA LOGGER

POS.	WIRE NUMBER	CIRCUIT REFERENCE
2	7640D (N)	DIAGNOSTIC PLUG RS232 IN
3	7650 (W)	DIAGNOSTIC PLUG RS232 OUT
5	7655D (Y)	RS232 GROUND
10	3181 (S)	AUTO GUIDANCE PPS SIGNAL INPUT TO GPS
11	57NE (B)	EARTH (ALL)

NOTE: *For the wiring color code refer to,* ***Wiring harness - Overview (A.30.A)****.*

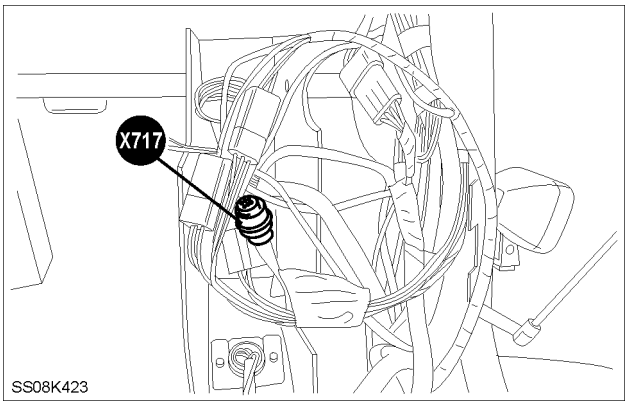

SS08K423 13

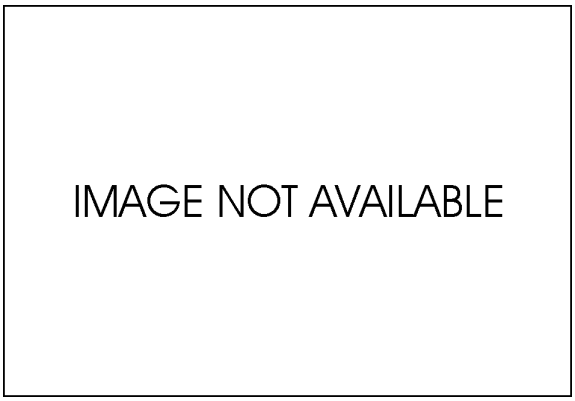

INA 14

BEHIND RIGHT HAND C-PILLAR COVER

X718 EARTH

POS.	WIRE NUMBER	CIRCUIT REFERENCE
1	57NC; 57NL (B)	EARTH (ALL)

NOTE: *For the wiring color code refer to,* ***Wiring harness - Overview (A.30.A)****.*

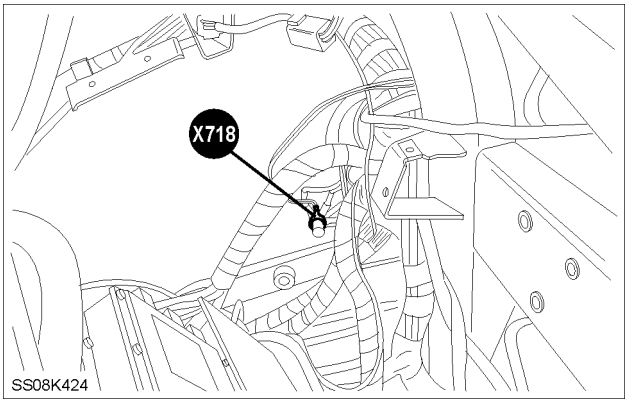

SS08K424 15

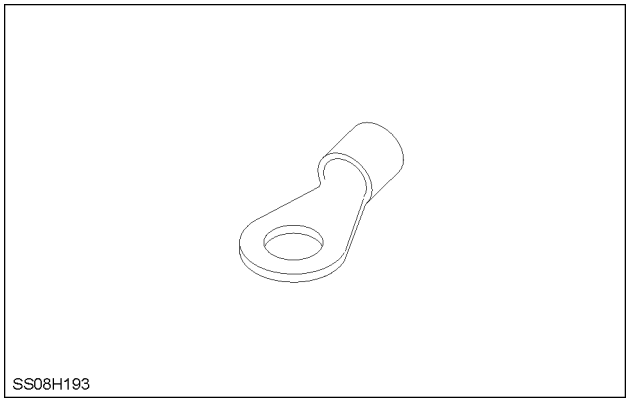

SS08H193 16

BEHIND REAR RIGHT HAND TRIM

https://tractormanualz.com/

X719 GPS RECEIVER

POS.	WIRE NUMBER	CIRCUIT REFERENCE
1	5500AC (R)	EHR CAN HIGH
2	7640G (TN)	DIAGNOSTIC PLUG RS232 IN
3	7650G (W)	DIAGNOSTIC PLUG RS232 OUT
4	3186 (S)	CERES PPS IN
5	7655G (Y)	RS232 GROUND

NOTE: *For the wiring color code refer to,* ***Wiring harness - Overview (A.30.A)****.*

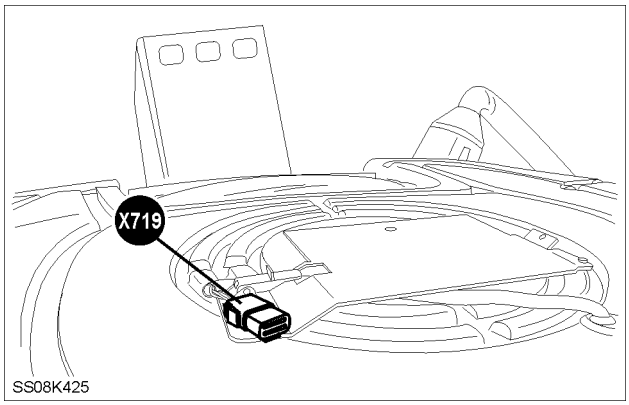

SS08K425 17

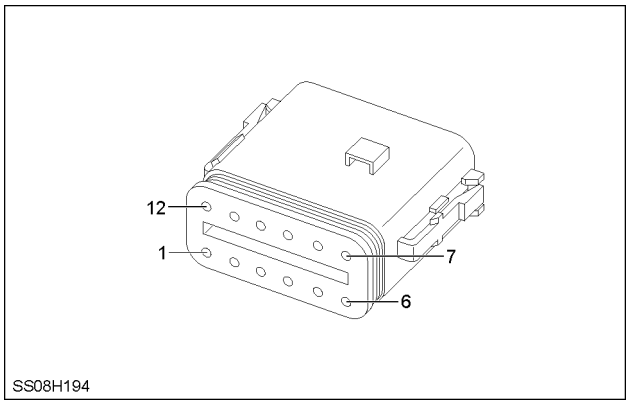

SS08H194 18

TOP CAB ROOF

https://tractormanualz.com/

Connector - Component diagram 72

X720 CERES CONTROLLER B

POS.	WIRE NUMBER	CIRCUIT REFERENCE
1	57NE (B)	EARTH (ALL)
2	7650D (W)	DIAGNOSTIC PLUG RS232 OUT
3	3187 (N)	AUTO GUIDANCE ROADING SELECT
7	3181 (S)	AUTO GUIDANCE PPS SIGNAL INPUT TO GPS
8	7640D (TN)	DIAGNOSTIC PLUG RS232 IN
14	7655D (Y)	RS232 GROUND

NOTE: *For the wiring color code refer to,* ***Wiring harness - Overview (A.30.A)****.*

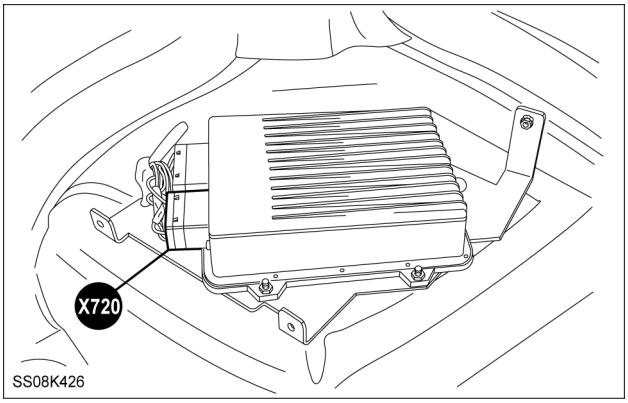

SS08K426 1

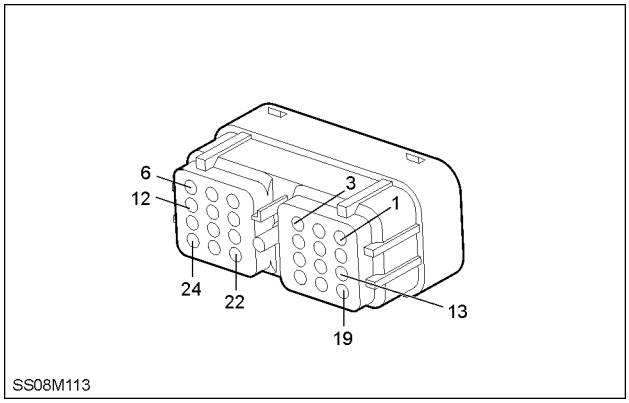

SS08M113 2

REAR LEFT HAND CAB BENEATH STORAGE TRAY

X723 RELAY BASE CRANK ISOLATE

POS.	WIRE NUMBER	CIRCUIT REFERENCE
30	5200AB (N)	EDC VALVE SUPPLY
85	57NH (B)	EARTH (ALL)
86	1001AC (W)	STARTER SOLENOID FEED
87A	5200AG (N)	EDC VALVE SUPPLY

NOTE: *For the wiring color code refer to,* ***Wiring harness - Overview (A.30.A)****.*

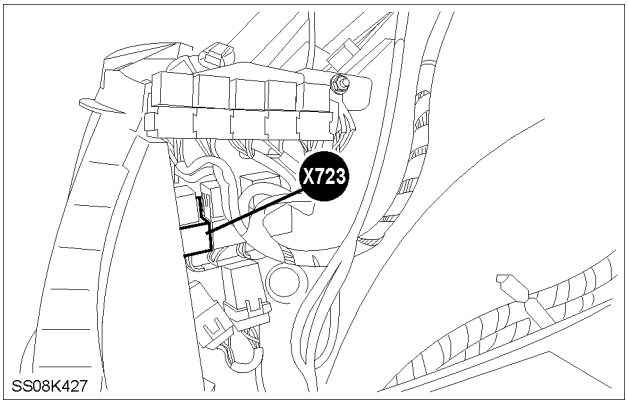

SS08K427 3

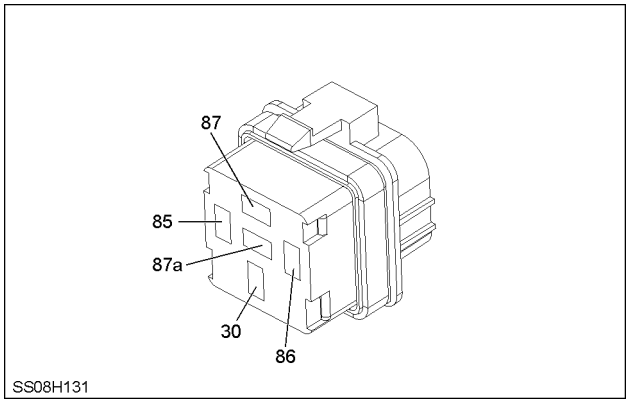

SS08H131 4

BEHIND RIGHT HAND TRIM

https://tractormanualz.com/

X724 RELAY BASE SOL VALVE B

POS.	WIRE NUMBER	CIRCUIT REFERENCE
30	3163A (O)	AUTO GUIDANCE STEERING SOLENOID VLV R FEED
85	57NJ (B)	EARTH (ALL)
86	3187B (N)	AUTO GUIDANCE ROADING SELECT
87	3163 (O)	AUTO GUIDANCE STEERING SOLENOID VLV R FEED

NOTE: *For the wiring color code refer to,* ***Wiring harness - Overview (A.30.A)****.*

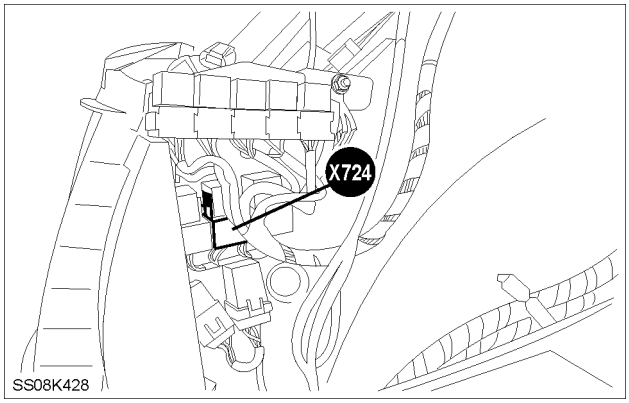

SS08K428 5

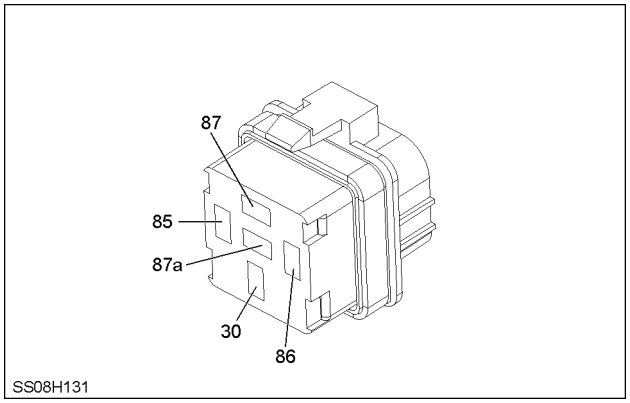

SS08H131 6

BEHIND RIGHT HAND TRIM

X725 RELAY BASE SOL VALVE A

POS.	WIRE NUMBER	CIRCUIT REFERENCE
30	3165A (O)	AUTO GUIDANCE STEERING SOLENOID VLV L FEED
85	57NK (B)	EARTH (ALL)
86	3187C (N)	AUTO GUIDANCE ROADING SELECT
87	3165 (O)	AUTO GUIDANCE STEERING SOLENOID VLV L FEED

NOTE: *For the wiring color code refer to,* ***Wiring harness - Overview (A.30.A)****.*

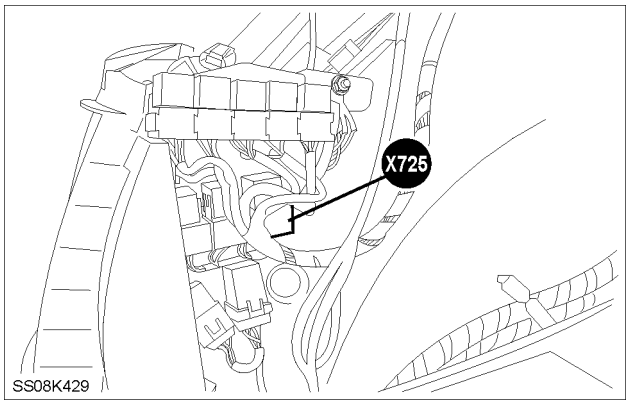

SS08K429 7

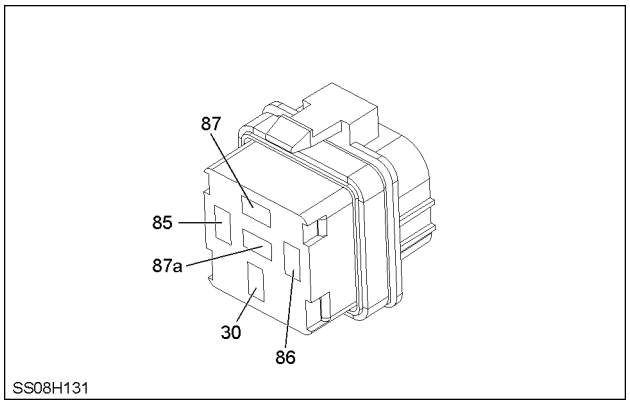

SS08H131 8

BEHIND RIGHT HAND TRIM

https://tractormanualz.com/

X726 ROOF CONNECTOR POWER

POS.	WIRE NUMBER	CIRCUIT REFERENCE
1	5200AH (N)	EDC VALVE SUPPLY
2	3186 (S)	CERES PPS IN
3	57NA (B)	EARTH (ALL)

NOTE: *For the wiring color code refer to,* ***Wiring harness - Overview (A.30.A)****.*

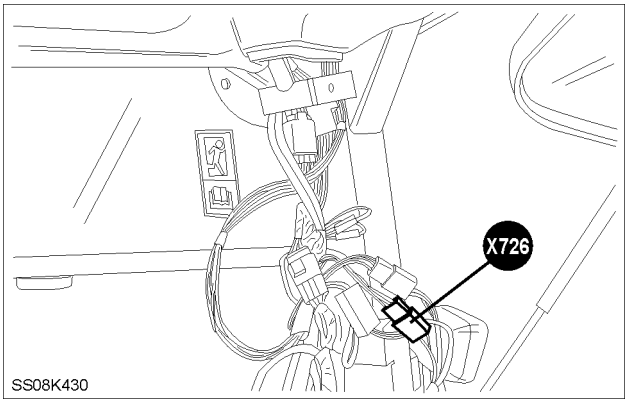

SS08K430 9

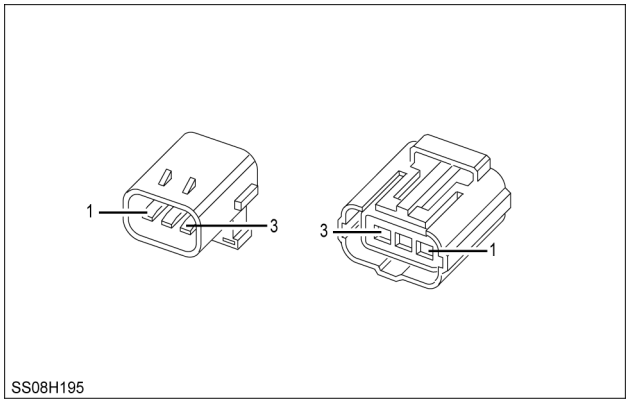

SS08H195 10

BEHIND RIGHT HAND C-PILLAR COVER

X727 ROOF CONNECTOR DATA 2

POS.	WIRE NUMBER	CIRCUIT REFERENCE
1	5500AB (R)	EHR CAN HIGH
2	5510AB (U)	EHR CAN LOW
5	7640G (TN)	DIAGNOSTIC PLUG RS232 IN
6	7650G (W)	DIAGNOSTIC PLUG RS232 OUT

NOTE: *For the wiring color code refer to,* ***Wiring harness - Overview (A.30.A)****.*

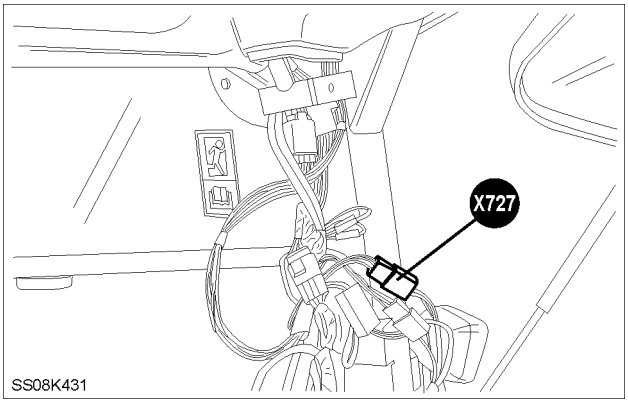

SS08K431 11

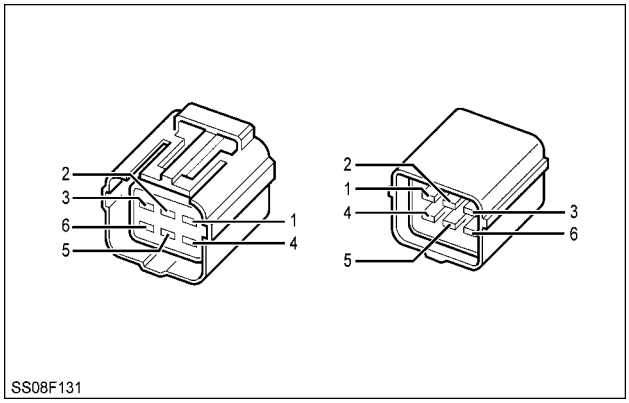

SS08F131 12

BEHIND RIGHT HAND C-PILLAR COVER

https://tractormanualz.com/

Connector - Component diagram 73

X730 MULTI CONTROL OPTION

POS.	WIRE NUMBER	CIRCUIT REFERENCE
1	5400K (Y)	CAN H
2	5420K (G)	CAN L
3	5400J (Y)	CAN H
4	5420J (G)	CAN L

NOTE: *For the wiring color code refer to,* ***Wiring harness - Overview (A.30.A)****.*

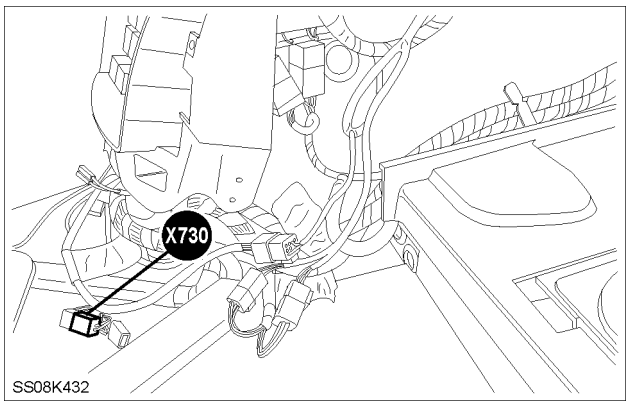

SS08K432 1

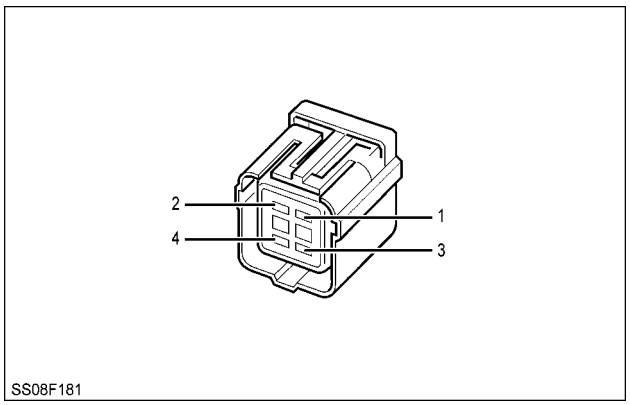

SS08F181 2

FRONT RIGHT HAND CAB FLOOR

X731 MULTI CONTROL OPTION

POS.	WIRE NUMBER	CIRCUIT REFERENCE
1	5400KX (Y)	CAN H
2	5420KX (G)	CAN L
3	5400WX (Y)	CAN H
4	5420WX (G)	CAN L

NOTE: *For the wiring color code refer to,* ***Wiring harness - Overview (A.30.A)****.*

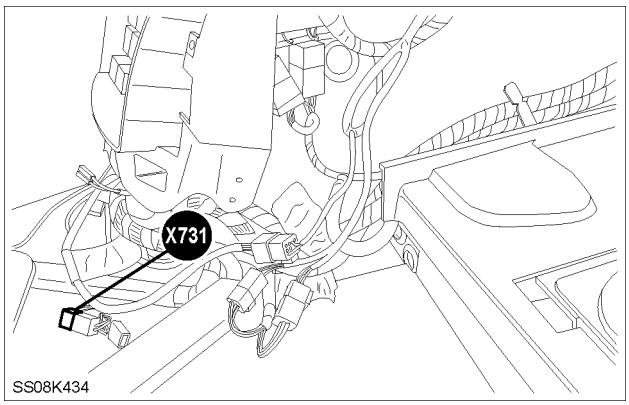

SS08K434 3

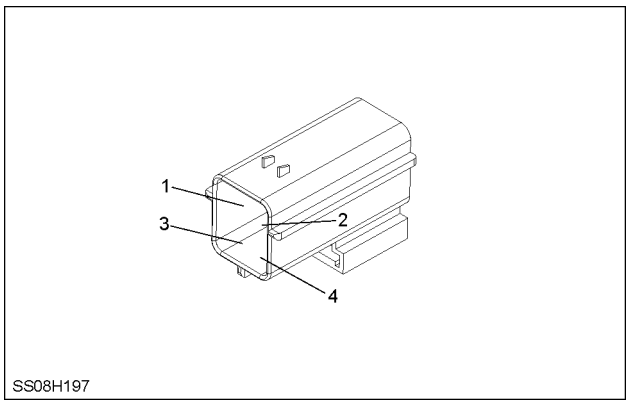

SS08H197 4

FRONT RIGHT HAND CAB FLOOR

https://tractormanualz.com/

X732 CAN DOG POWER

POS.	WIRE NUMBER	CIRCUIT REFERENCE
1	7000BX (U)	TRANS CONTROL SUPPLY
2	1001AE (W)	STARTER SOLENOID FEED
3	57AB (B)	EARTH (ALL)

NOTE: *For the wiring color code refer to,* ***Wiring harness - Overview (A.30.A)****.*

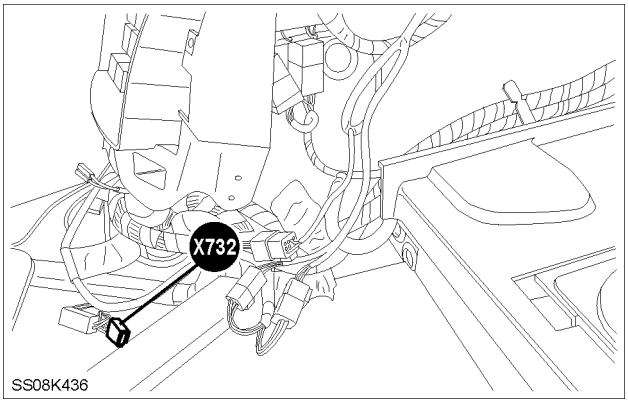

SS08K436 5

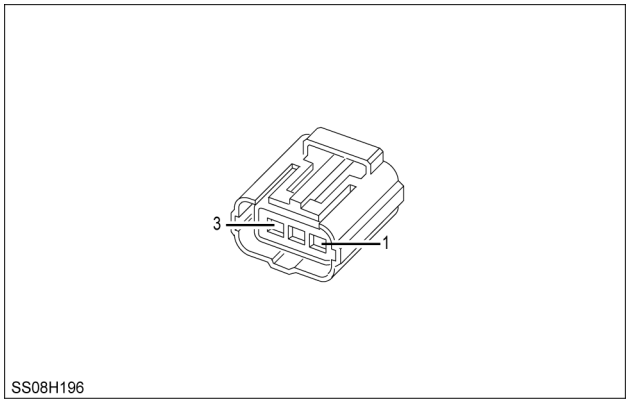

SS08H196 6

FRONT RIGHT HAND CAB FLOOR

X734 LAMP FEED

POS.	WIRE NUMBER	CIRCUIT REFERENCE
1	1012L (R)	ILLUMINATION
2	57PW (B)	EARTH (ALL)

NOTE: *For the wiring color code refer to,* ***Wiring harness - Overview (A.30.A)****.*

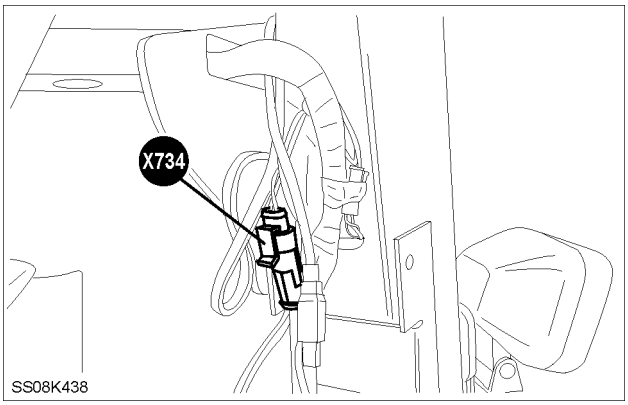

SS08K438 7

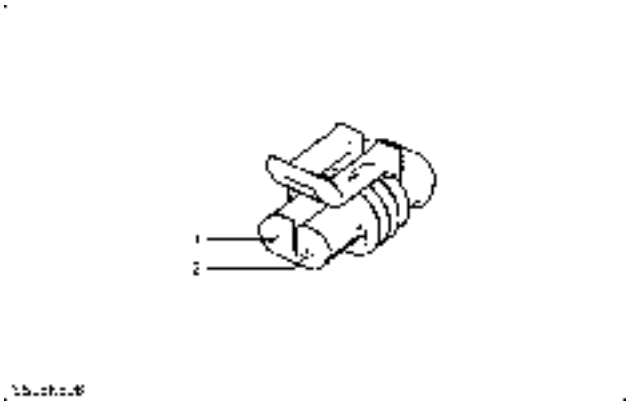

SS08K508 8

BEHIND RIGHT HAND C-PILLAR COVER

https://tractormanualz.com/

X739 REVERSIBLE FAN COMPRESSOR / VALVE

POS.	WIRE NUMBER	CIRCUIT REFERENCE
1	6327A (N)	REVERSIBLE FAN RELAY POWER OUT
2	57SD (B)	EARTH (ALL)
3	6327B (N)	REVERSIBLE FAN RELAY POWER OUT
4	57SC (B)	EARTH (ALL)

NOTE: *For the wiring color code refer to,* ***Wiring harness - Overview (A.30.A)****.*

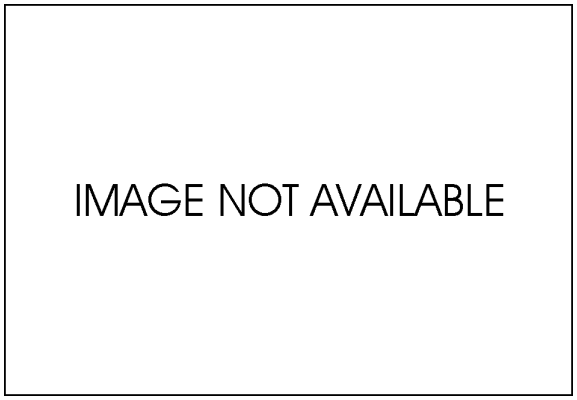

INA 9

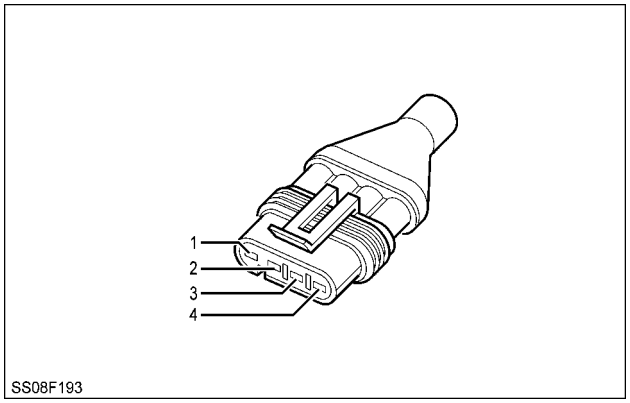

SS08F193 10

LEFT HAND ENGINE

https://tractormanualz.com/

Connector - Component diagram 74

X740 REVERSIBLE FAN RELAY

POS.	WIRE NUMBER	CIRCUIT REFERENCE
30	6325A (R)	REVERSIBLE FAN OPTION - RELAY FEED
85	6325B (N)	REVERSIBLE FAN OPTION - RELAY FEED
86	6315 (G)	REVERSIBLE FAN OPTION - RELAY CONTROL
87	6327 (R)	REVERSIBLE FAN RELAY POWER OUT

NOTE: *For the wiring color code refer to,* ***Wiring harness - Overview (A.30.A)****.*

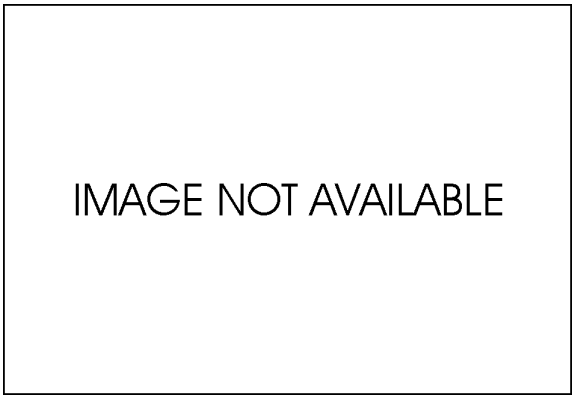

INA 1

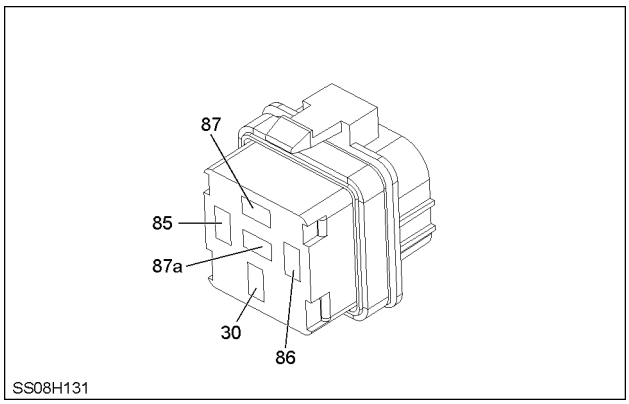

SS08H131 2

LEFT HAND ENGINE

https://tractormanualz.com/

X745 ELECTRONIC PARK BRAKE INTERFACE CONN

POS.	WIRE NUMBER	CIRCUIT REFERENCE
A1	3031 (N)	EPB +12 HOT
A2	3150A (W)	HANDBRAKE SWITCH (N.C CONTACT) OFF SIG
A4	3036 (O)	EPB SHUTTLE PARK SWITCH INPUT
A7	3017 (G)	EPB SYSTEM FAILURE WARNING LIGHT
A8	57RK (B)	EARTH (ALL)
B3	3150 (W)	HANDBRAKE SWITCH (N.C CONTACT) OFF SIG
B4	1001AG (W)	STARTER SOLENOID FEED
C1	10X (G)	IGNITION SUPPLY
C2	5400MC (Y)	CAN H
C3	5420MC (G)	CAN L
C7	3039 (U)	EPB SHUTTLE PARK SWITCH OUTPUT

NOTE: *For the wiring color code refer to,* ***Wiring harness - Overview (A.30.A)****.*

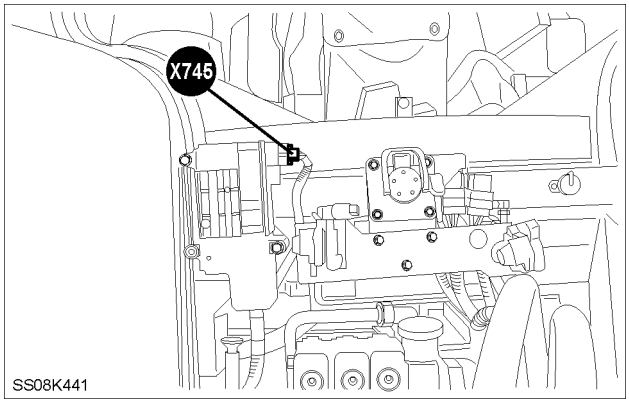

SS08K441 3

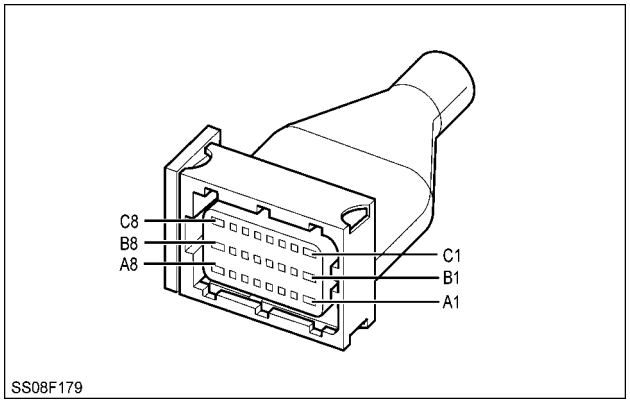

SS08F179 4

REAR LEFT HAND CAB

https://tractormanualz.com/

X748 ELECTRIC SHIFT PTO

POS.	WIRE NUMBER	CIRCUIT REFERENCE
1	2050MY (G) / 2050AW (B)	PTO SUPPLY / DOG SUPPLY
2	5020Z (TN) / 5020AB (TN)	EDC PROC +5V REF VOLTAGE DROP POSN/RATE
3	2151 (K)	EPTO DRIVE RELAY UPPER SPEED
4	2152 (K)	ESPTO DRIVE RELAY LOWER SPEED
5	2155 (N)	ESPTO ACTUATOR POWER +12V
6	60BY (B/W)	SENSOR GROUND
7	2156 (N)	ESPTO ACTUATOR POS SIGNAL
8	2157 (U) / 2157 (N)	ESPTO NEUTRAL
9	2158 (U)	ESPTO LOWER SPEED
10	2159 (U)	PTO UPPER SPEED

NOTE: *For the wiring color code refer to,* ***Wiring harness - Overview (A.30.A)****.*

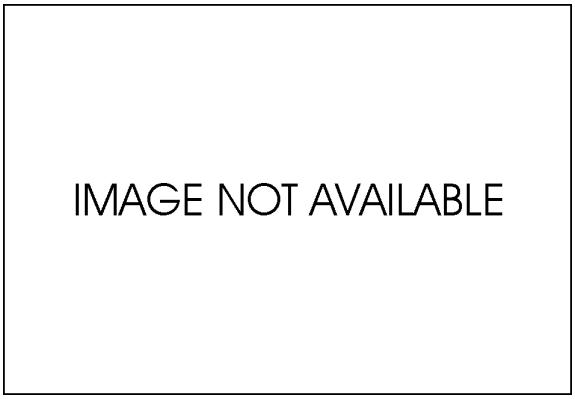

INA 5

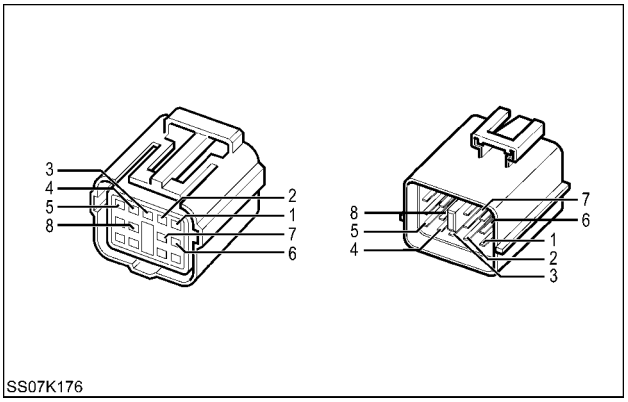

SS07K176 6

BEHIND RIGHT HAND TRIM TOP THE FUSEBOX

https://tractormanualz.com/

Connector - Component diagram 75

X750 HEATER BLOWER SEED SWITCH H.V.A.C. ATC

POS.	WIRE NUMBER	CIRCUIT REFERENCE
A	9228 (G/S)	AC-AUTOMATIC BLOWER SPEED
B	9211 (G/Y)	AC-BLOWER SPEED LOW (1)
C	9212 (K/G)	AC-BLOWER SPEED MED.1 (2)
D	9213 (K/O)	AC-BLOWER SPEED MED.2 (3)
E	9227 (B/W)	AC-BLOWER SWITCH SUPPLY

NOTE: *For the wiring color code refer to,* ***Wiring harness - Overview (A.30.A)****.*

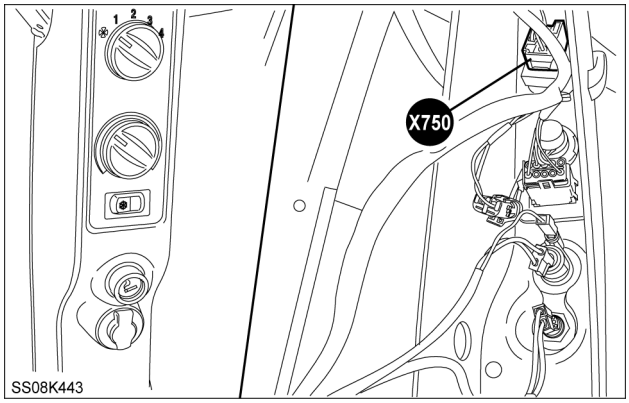

SS08K443 1

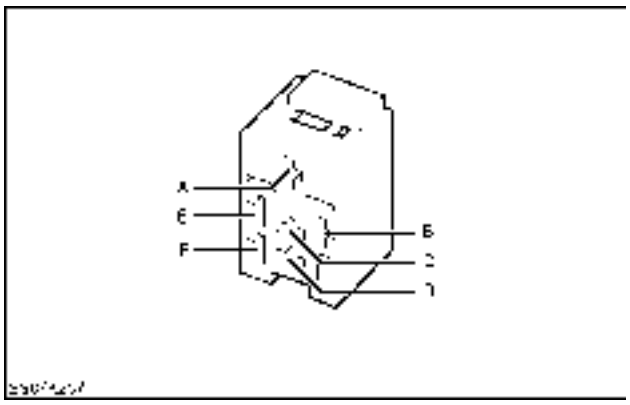

SS07K257 2

CAB LEFT HAND C-PILLAR

X751 POTENTIOMETER TEMPERATURE ADJUSTMENT H.V.A.C ATC

POS.	WIRE NUMBER	CIRCUIT REFERENCE
A	9216 (LG/R)	AC-TEMPERATURE POTI CAB
B	57ZN (B)	EARTH (ALL)

NOTE: *For the wiring color code refer to,* ***Wiring harness - Overview (A.30.A)****.*

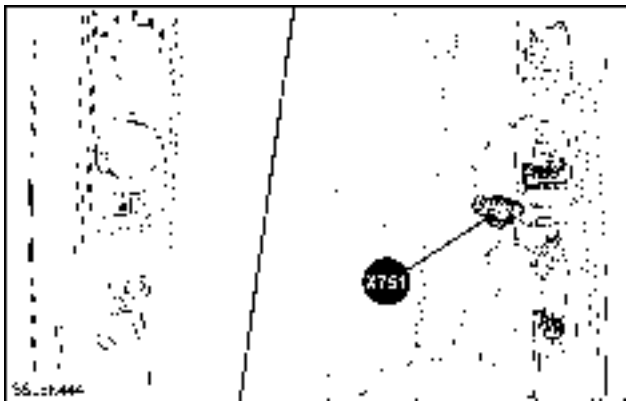

SS08K444 3

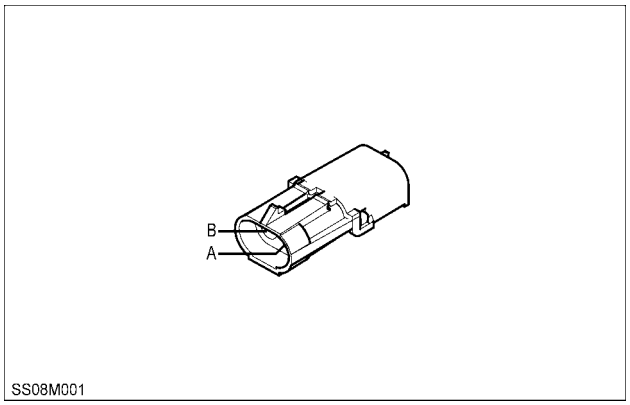

SS08M001 4

CAB LEFT HAND C-PILLAR

https://tractormanualz.com/

X752 AIR CONDITION MODE SWITCH H.V.A.C ATC

POS.	WIRE NUMBER	CIRCUIT REFERENCE
1	9217 (N/R)	AC-SWITCH MAX DEFROST
2	982E (R)	BLOWER MOTOR FEED
3	9218 (S/R)	AC-SWITCH ECONOMY
7	57 ZM (B)	EARTH (ALL)
9	57ZL (B)	EARTH (ALL)

NOTE: *For the wiring color code refer to,* ***Wiring harness - Overview (A.30.A)****.*

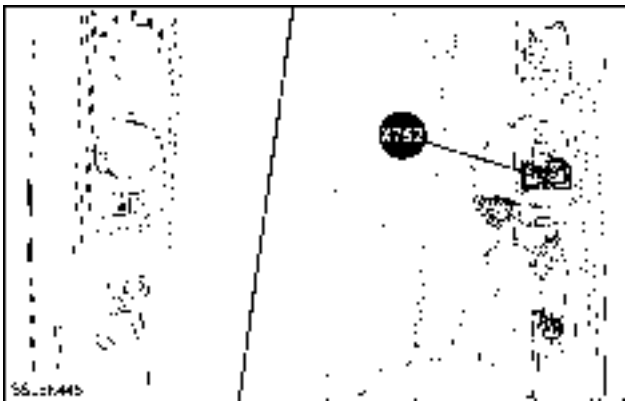

SS08K445 5

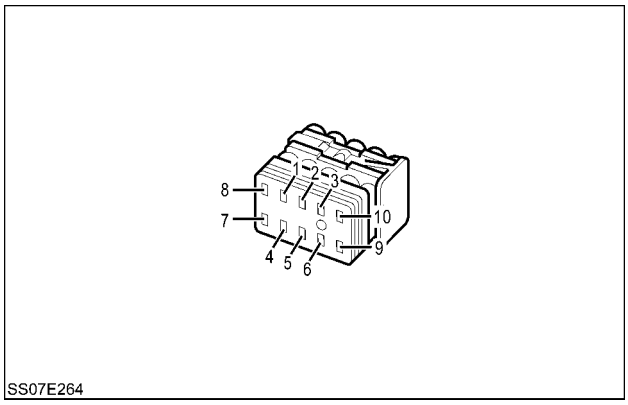

SS07E264 6

CAB LEFT HAND C-PILLAR

X753 ASSEMBLY H.V.A.C ATC

POS.	WIRE NUMBER	CIRCUIT REFERENCE
A	9222 (Y/B)	AC-SIGNAL OUTLET TEMPERATURE SENSOR
B	9221 (L/B)	AC-EVAPORATOR TEMPERATURE SENSOR
C	9220 (U)	AC-LOW PRESSURE SWITCH INPUT
D	57ZH (B)	EARTH (ALL)
E	982D (R)	BLOWER MOTOR FEED
F	9226 (Y/R)	AC-SIGNAL WATER VALVE
G	9219 (U/W)	AC-LOW PRESSURE SWITCH OUTPUT

NOTE: *For the wiring color code refer to,* ***Wiring harness - Overview (A.30.A)****.*

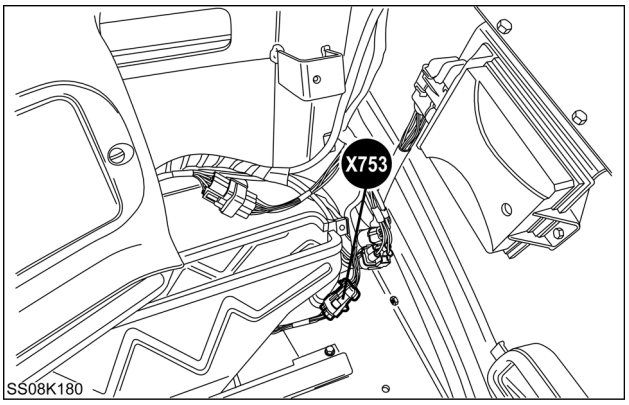

SS08K180 7

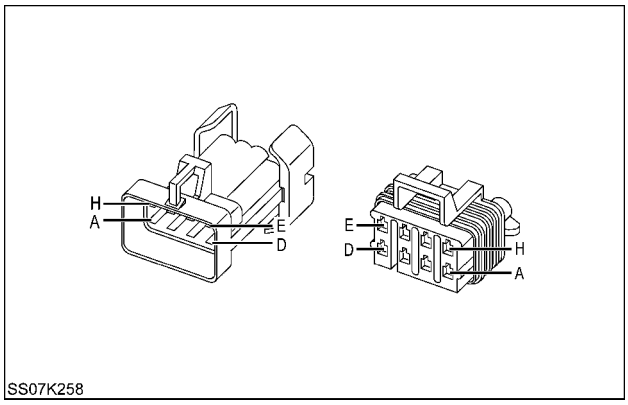

SS07K258 8

CAB REAR LEFT HAND

https://tractormanualz.com/

X754 BLOWER MOTOR ASSEMBLY H.V.A.C ATC

POS.	WIRE NUMBER	CIRCUIT REFERENCE
1	982 (R)	BLOWER MOTOR FEED
3	57ZD (B)	EARTH (ALL)
4	9225 (U/R)	AC-BLOWER SPEED
6	9224 (O/B)	AC-SIGNAL AMBIENT TEMPERATURE SENSOR
7	9223 (R/B)	AC-SIGNAL CAB TEMPERATURE SENSOR
8	57ZC (B)	EARTH (ALL)

NOTE: *For the wiring color code refer to,* ***Wiring harness - Overview (A.30.A)****.*

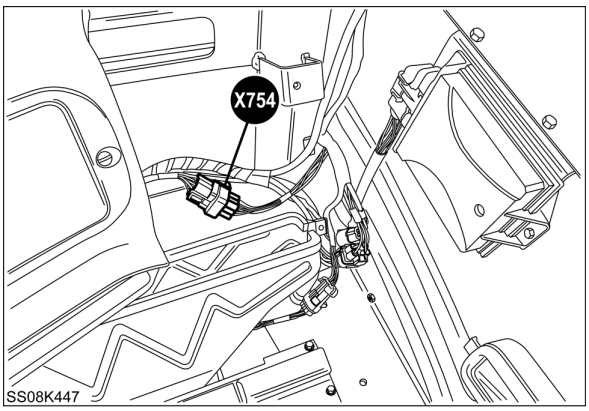

SS08K447 9

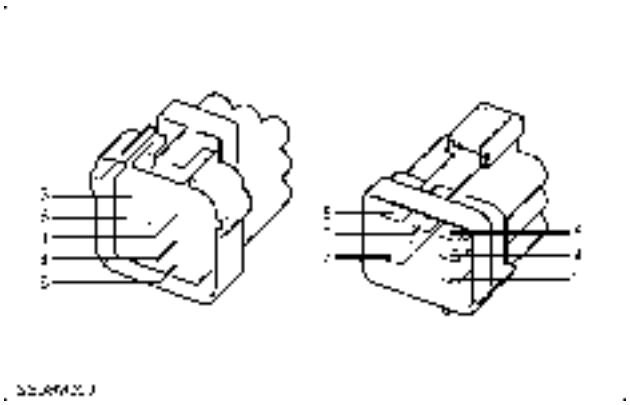

SS08M003 10

CAB REAR LEFT HAND

https://tractormanualz.com/

X755 AUTOMATIC TEMPERATURE CONTROL H.V.A.C

POS.	WIRE NUMBER	CIRCUIT REFERENCE
1	(G)	CAN L
2	(Y)	CAN H
3	9226 (Y/R)	AC-SIGNAL WATER VALVE
4	982G (W/R)	BLOWER MOTOR FEED
5	9225 (U/R)	AC-BLOWER SPEED
6	982 (U/R)	BLOWER MOTOR FEED
15	2005 (L/R)	AIR CON CLUCH RELAY
16	9229 (O/R)	AC-DE-FOG
17	982J (R)	BLOWER MOTOR FEED
18	57ZE (B)	EARTH (ALL)
21	9223 (R/B)	AC-SIGNAL CAB TEMPERATURE SENSOR
22	9222 (Y/B)	AC-SIGNAL OUTLET TEMPERATURE SENSOR
23	9221 (L/B)	AC-EVAPORATOR TEMPERATURE SENSOR
24	9224 (O/B)	AC-SIGNAL AMBIENT TEMPERATURE SENSOR
25	9217 (N/R)	AC-SWITCH MAX DEFROST
26	9218 (S/R)	AC-SWITCH ECONOMY
27	9228 (G/S)	AC-AUTOMATIC BLOWER SPEED
28	9211 (G/Y)	AC-BLOWER SPEED LOW (1)
29	9216 (LG/R)	AC-TEMPERATURE POTI CAB
30	9212 (K/G)	AC-BLOWER SPEED MED.1 (2)
31	9213 (K/O)	AC-BLOWER SPEED MED.2 (3)
33	2006A (W)	DE-ICING SWITCH - AIR CONDITIONER
34	2006B (W/U)	DE-ICING SWITCH - AIR CONDITIONER
35	9220 (U)	AC-LOW PRESSURE SWITCH INPUT
36	9219 (U/W)	AC-LOW PRESSURE SWITCH OUTPUT

NOTE: *For the wiring color code refer to,* ***Wiring harness - Overview (A.30.A)****.*

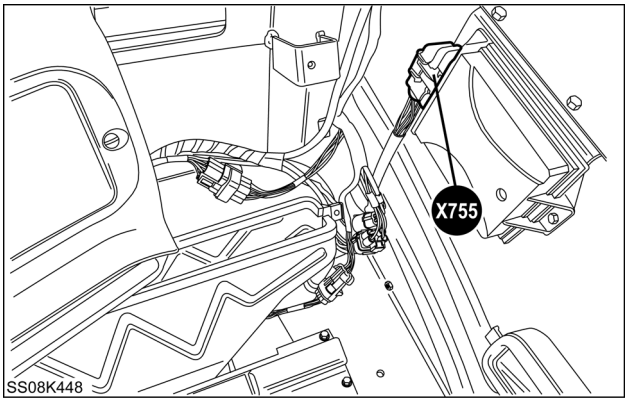

SS08K448 11

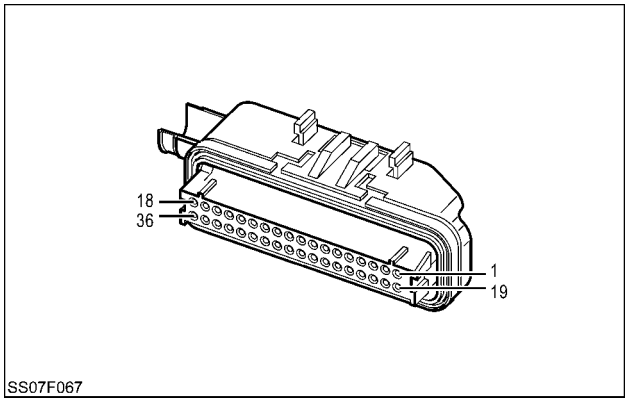

SS07F067 12

CAB REAR LEFT HAND

https://tractormanualz.com/

X756 LOW PRESSURE SWITCH H.V.A.C SYSTEM MANUAL

POS.	WIRE NUMBER	CIRCUIT REFERENCE
1	9215 (U) / (U/K)	AC-SWITCH ON
2	2006A (L) / (U/R)	DE-ICING SWITCH - AIR CONDITIONER

NOTE: *For the wiring color code refer to,* ***Wiring harness - Overview (A.30.A)****.*

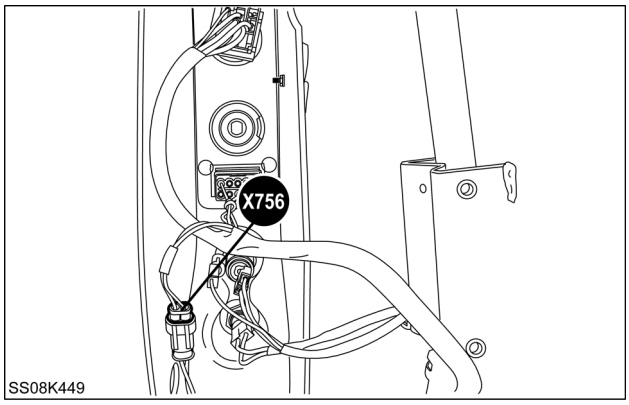

SS08K449 13

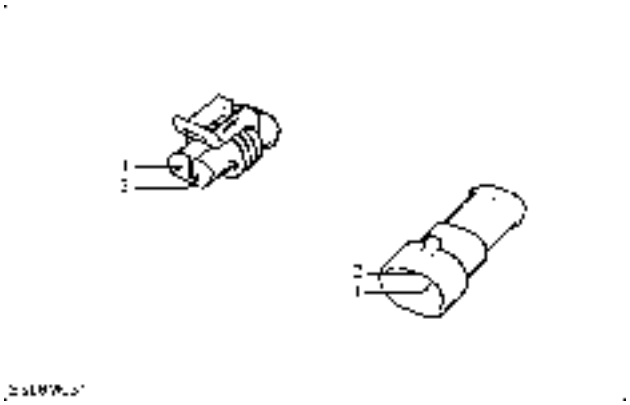

SS08M031 14

CAB LEFT HAND C-PILLAR

X757 OPERATING MODE SWITCH H.V.A.C SYSTEM MANUAL

POS.	WIRE NUMBER	CIRCUIT REFERENCE
2	9210 (G)	AC-SWITCH POWER
3	9215 (U)	AC-SWITCH ON
7	57A (B)	EARTH (ALL)

NOTE: *For the wiring color code refer to,* ***Wiring harness - Overview (A.30.A)****.*

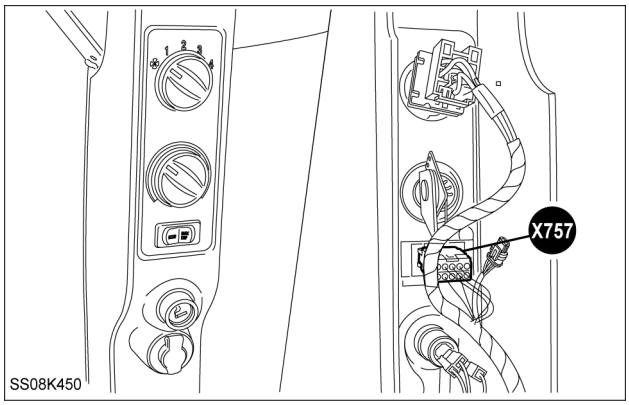

SS08K450 15

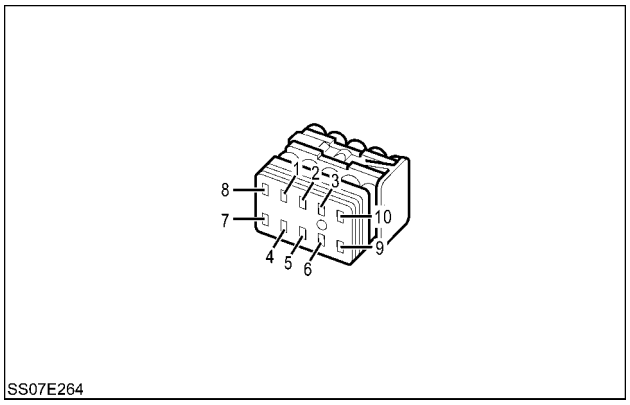

SS07E264 16

CAB LEFT HAND C-PILLAR

https://tractormanualz.com/

X758 BLOWER SPEED SWITCH H.V.A.C SYSTEM MANUAL

POS.	WIRE NUMBER	CIRCUIT REFERENCE
A	9211 (G/Y)	AC-BLOWER SPEED LOW (1)
B	9212 (K)	AC-BLOWER SPEED MED.1 (2)
C	9213 (K/O)	AC-BLOWER SPEED MED.2 (3)
D	9214 (G/S)	AC-BLOWER SPEED HIGH.2 (2)
E	982A (R)	BLOWER MOTOR FEED
F	9210 (G)	AC-SWITCH POWER

NOTE: *For the wiring color code refer to,* ***Wiring harness - Overview (A.30.A)****.*

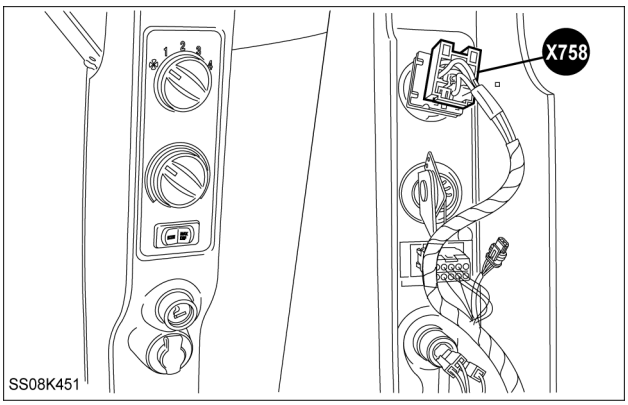

SS08K451 17

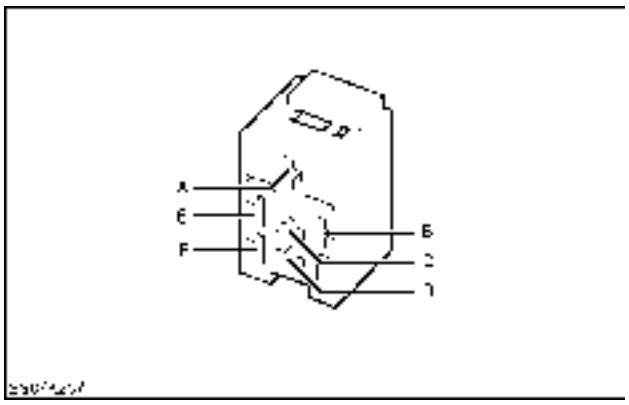

SS07K257 18

CAB LEFT HAND C-PILLAR

X759 BLOWER MOTOR H.V.A.C MANUAL SYSTEM

POS.	WIRE NUMBER	CIRCUIT REFERENCE
1	57B (B)	EARTH (ALL)
3	9211 (G/Y)	AC-BLOWER SPEED LOW (1)
4	9212 (K)	AC-BLOWER SPEED MED.1 (2)
5	9213 (K/O)	AC-BLOWER SPEED MED.2 (3)
8	9214 (G/S)	AC-BLOWER SPEED HIGH.2 (2)

NOTE: *For the wiring color code refer to,* ***Wiring harness - Overview (A.30.A)****.*

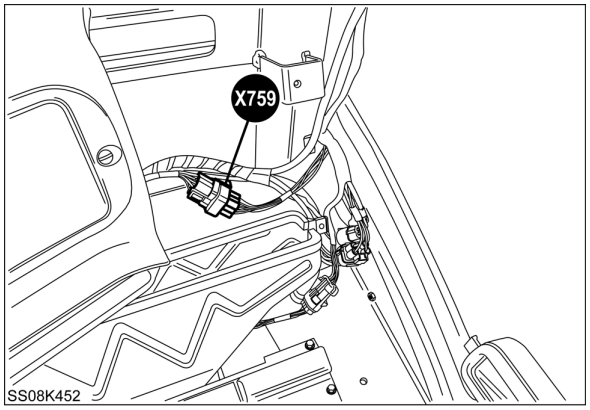

SS08K452 19

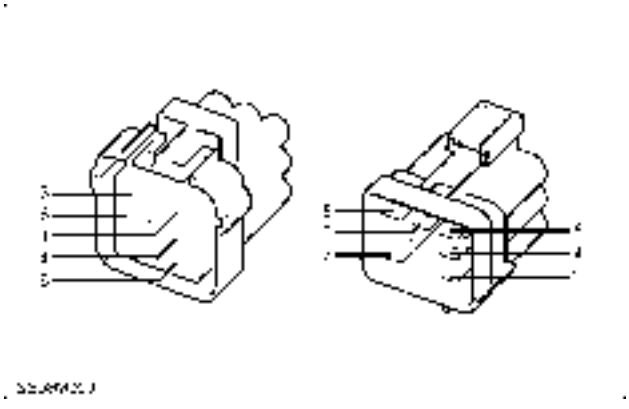

SS08M003 20

CAB REAR LEFT HAND

https://tractormanualz.com/

Connector - Component diagram 76

X761 MAXI FUSEHOLDER

POS.	WIRE NUMBER	CIRCUIT REFERENCE
13	150BG (N)	BATTERY FEED (UNFUSED)(ALL)
14	150BJ (N)	BATTERY FEED (UNFUSED)(ALL)
15	150BH (N)	BATTERY FEED (UNFUSED)(ALL)
16	150BK (N)	BATTERY FEED (UNFUSED)(ALL)

NOTE: *For the wiring color code refer to,* ***Wiring harness - Overview (A.30.A)****.*

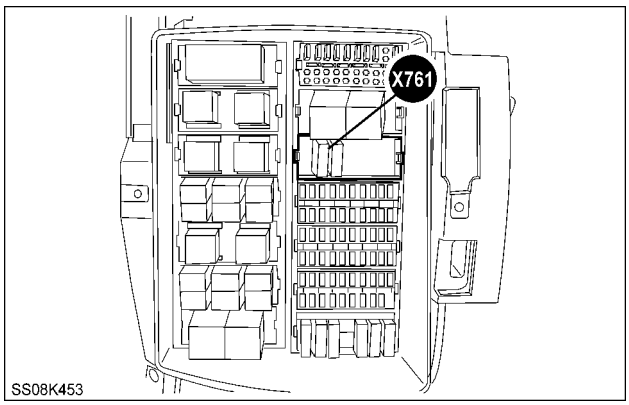

SS08K453 1

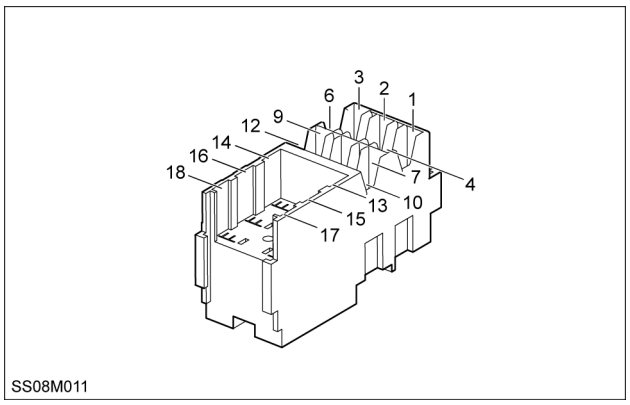

SS08M011 2

FRONT RIGHT HAND CAB

X764 FRONT SCREEN HEATER RELAY

POS.	WIRE NUMBER	CIRCUIT REFERENCE
A30	150BK (N)	BATTERY FEED (UNFUSED)(ALL)
A85	57RZ (B)	EARTH (ALL)
A86	1085 (N)	FRONT SCREEN HEATER RELAY CONTROL
A87	1082 (Y)	REAR SCREEN HEATER
B30	150BJ (N)	BATTERY FEED (UNFUSED)(ALL)
B85	57RY (B)	EARTH)ALL)
B86	1086 (N)	REAR SCREEN HEATER RELAY CONTROL
B87	1080 (R)	FRONT SCREEN HEATER

NOTE: *For the wiring color code refer to,* ***Wiring harness - Overview (A.30.A)****.*

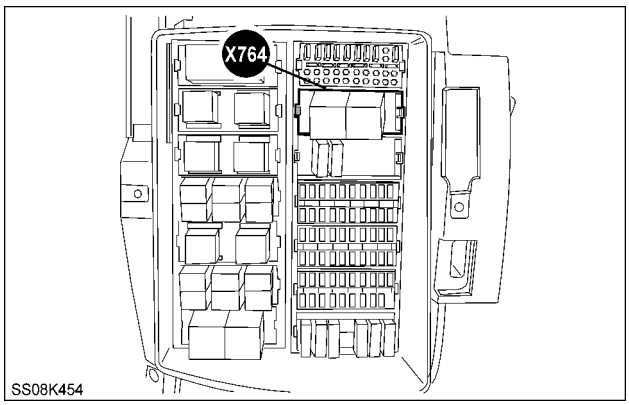

SS08K454 3

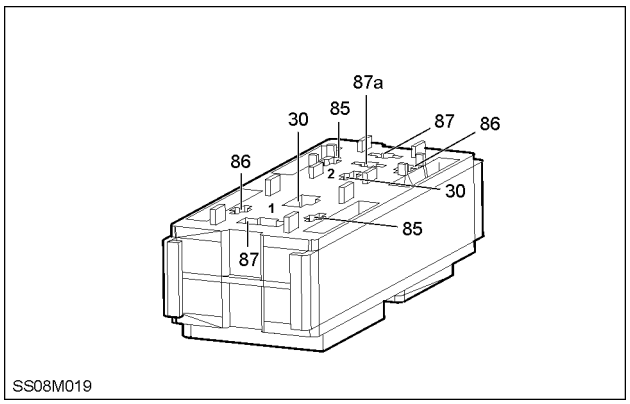

SS08M019 4

FRONT RIGHT HAND CAB

https://tractormanualz.com/

X766 SCREEN HEATER SWITCH

POS.	WIRE NUMBER	CIRCUIT REFERENCE
1	1085 (N)	FRONT SCREEN HEATER RELAY CONTROL
2	1006D (N)	ALTERNATOR WARNING LAMP
3	1086 (N)	REAR SCREEN HEATER RELAY CONTROL
7	57SA (B)	EARTH (ALL)
9	57SB (B)	EARTH (ALL)

NOTE: *For the wiring color code refer to,* ***Wiring harness - Overview (A.30.A)****.*

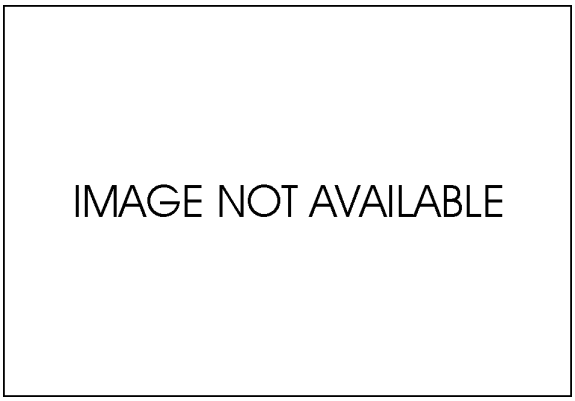

INA 5

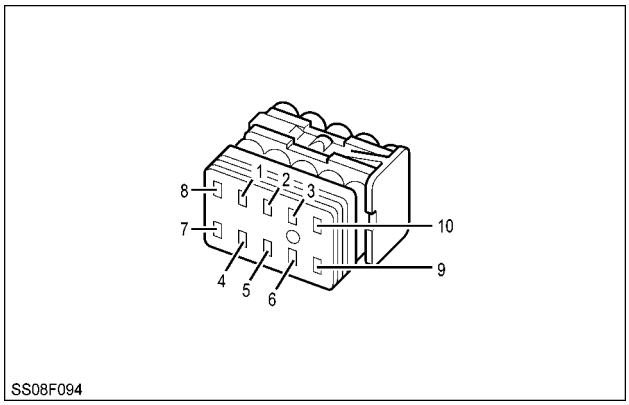

SS08F094 6

RIGHT HAND C-PILLAR

X767 SCREEN HEATER ROOF CONNECTOR

POS.	WIRE NUMBER	CIRCUIT REFERENCE
1	1080A (R)	FRONT SCREEN HEATER
2	1080B (R)	FRONT SCREEN HEATER
3	1082A (Y)	REAR SCREEN HEATER
4	1082B (Y)	REAR SCREEN HEATER

NOTE: *For the wiring color code refer to,* ***Wiring harness - Overview (A.30.A)****.*

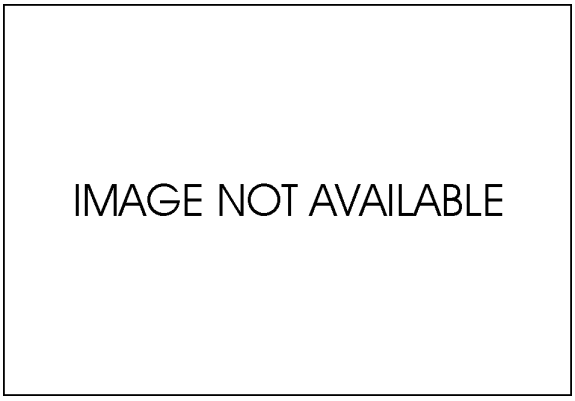

INA 7

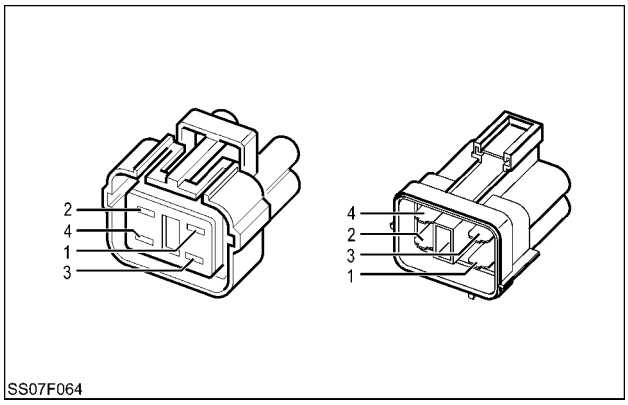

SS07F064 8

LEFT HAND C-PILLAR

https://tractormanualz.com/

X768 MAIN EARTH POINT

POS.	WIRE NUMBER	CIRCUIT REFERENCE
1	57RX (B)	EARTH (ALL)

NOTE: *For the wiring color code refer to,* ***Wiring harness - Overview (A.30.A)****.*

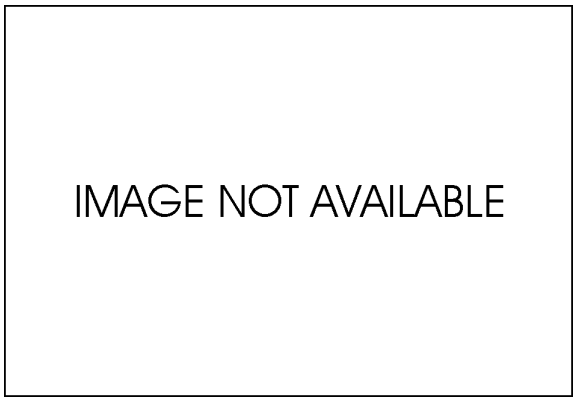

INA 9

BRI4404B 10

TOP LEFT HAND C-PILLAR

X769 REAR SCREEN HEATER

POS.	WIRE NUMBER	CIRCUIT REFERENCE
1	1082A (Y)	REAR SCREEN HEATER
2	1082B (Y)	REAR SCREEN HEATER
3	57TY (B)	EARTH (ALL)

NOTE: *For the wiring color code refer to,* ***Wiring harness - Overview (A.30.A)****.*

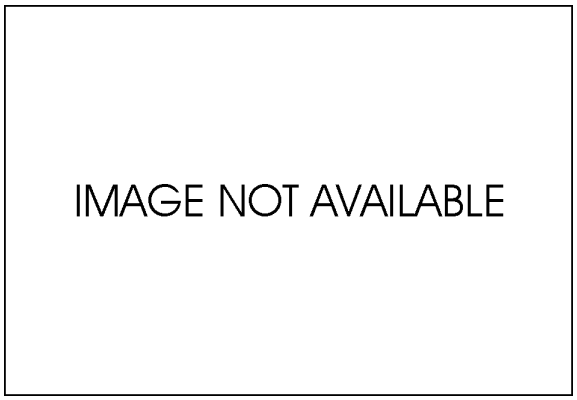

INA 11

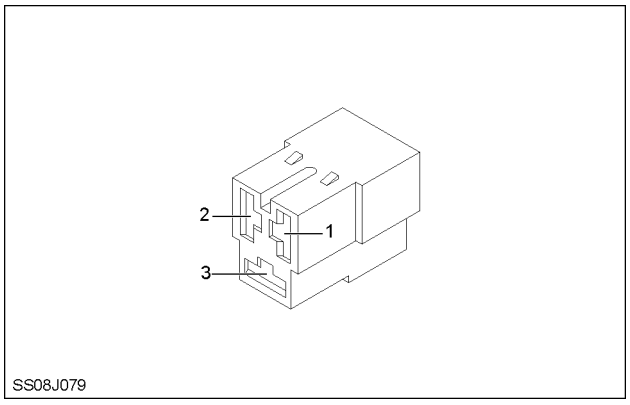

SS08J079 12

REAR CAB ROOF

https://tractormanualz.com/

Connector - Component diagram 77

X770 EARTH CONNECTOR

POS.	WIRE NUMBER	CIRCUIT REFERENCE
1	57TX (B)	EARTH (ALL)

NOTE: *For the wiring color code refer to,* ***Wiring harness - Overview (A.30.A)****.*

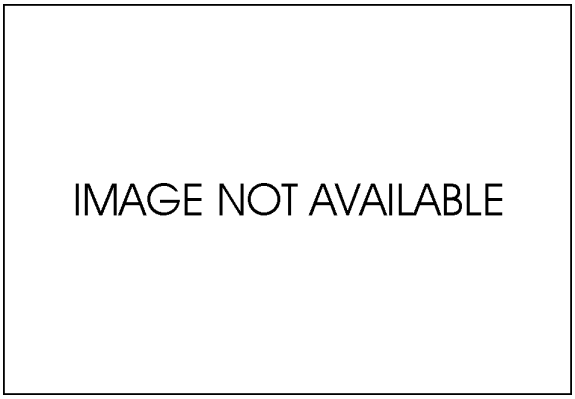

INA 1

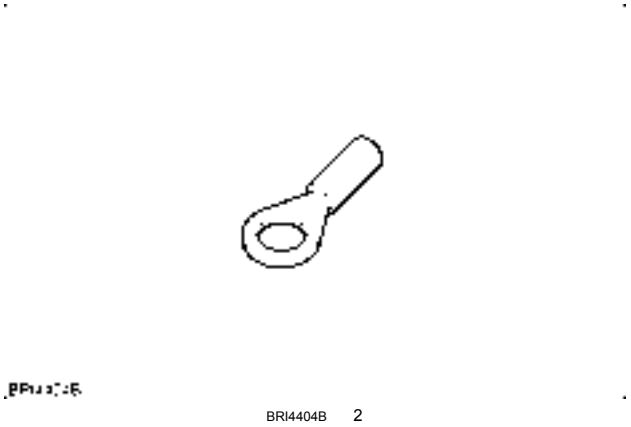

BRI4404B 2

LEFT HAND C PILLAR

https://tractormanualz.com/

X776 ARMREST (GARU)

POS.	WIRE NUMBER	CIRCUIT REFERENCE
1	5200AT (N)	EDC VALVE SUPPLY
2	7000BM (U)	TRANS CONTROL SUPPLY
4	2250S (K)	PTO FRONT - SUPPLY
5	2045 (O)	PTO SWITCH TO MODULE
6	2046 (O)	PTO SWITCH (VCC)
7	2248 (K)	PTO FRONT - SWITCH (VCCS)
8	2245 (K)	PTO FRONT - SWITCH TO MODULE (MOM)
9	2065 (N)	PTO ENGAGED
10	2270 (O)	PTO FRONT - WARNING LAMP
11	5910 (Y)	ISO BUS CAN SIGNAL HIGH
12	5900 (G)	ISO BUS CAN SIGNAL LOW
13	5910F (Y)	ISO BUS CAN SIGNAL HIGH
14	5900F (G)	ISO BUS CAN SIGNAL LOW
18	5400E (Y)	CAN H
19	5420E (G)	CAN L
21	5400G (Y)	CAN H
22	5420G (G)	CAN L
23	5500B (R)	EHR CAN HIGH
24	5510B (U)	EHR CAN LOW
26	5500D (R)	EHR CAN HIGH
27	5510D (U)	EHR CAN LOW
30	5955C (S)	RS232 INPUT TECU
31	5960C (W)	RS232 OUTPUT TECU
32	57RE (B)	EARTH (ALL)
33	57RF (B)	EARTH (ALL)

NOTE: *For the wiring color code refer to,* ***Wiring harness - Overview (A.30.A)****.*

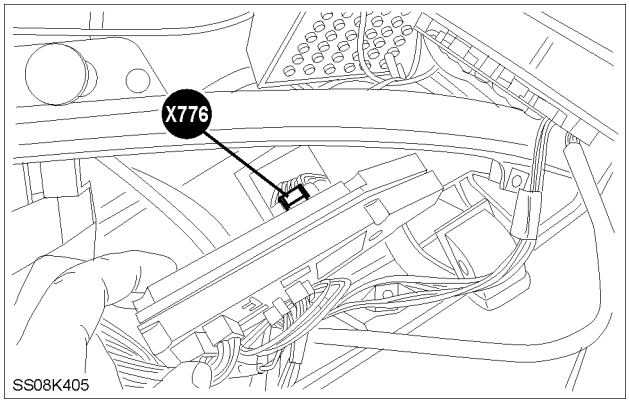

SS08K405 3

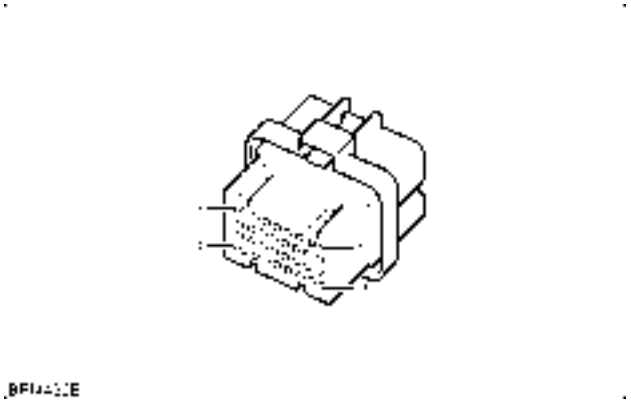

BRI4420B 4

LEFT HAND C PILLAR

https://tractormanualz.com/

X777 SWITCH ADJUST MOTOR

POS.	WIRE NUMBER	CIRCUIT REFERENCE
1	181R (W)	BLOWER MOTOR FEED
2	57D (G)	EARTH (ALL)
3	57B (B)	EARTH (ALL)
4	57C (B)	EARTH (ALL)
5	181T (L)	BLOWER MOTOR FEED
6	181N (W)	BLOWER MOTOR FEED

NOTE: *For the wiring color code refer to,* ***Wiring harness - Overview (A.30.A)****.*

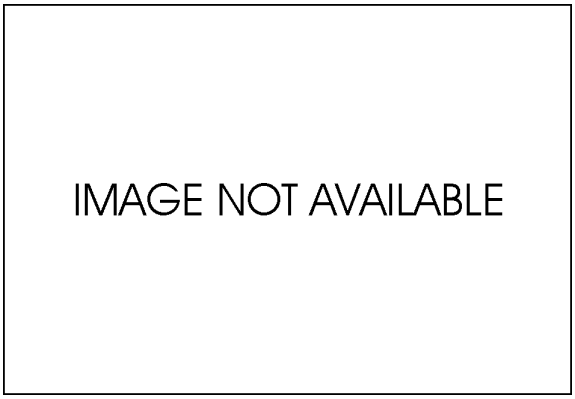

INA 5

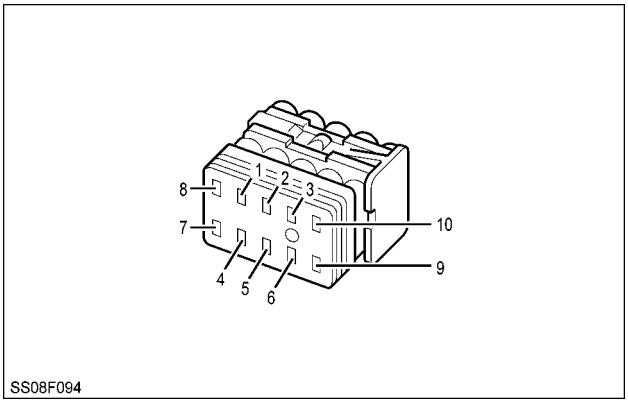

SS08F094 6

LEFT HAND ON GARU

https://tractormanualz.com/

Connector - Component diagram 78

X780 REAR PTO SHIFT POSITION SENSOR

POS.	WIRE NUMBER	CIRCUIT REFERENCE
1	60BY (B/W)	SENSOR GROUND
2	5020AB (TN)	EDC PROC +5V REF VOLTAGE DROP POSN/RATE
3	2156 (N)	ESPTO ACTUATOR POS SIGNAL

NOTE: *For the wiring color code refer to,* ***Wiring harness - Overview (A.30.A)****.*

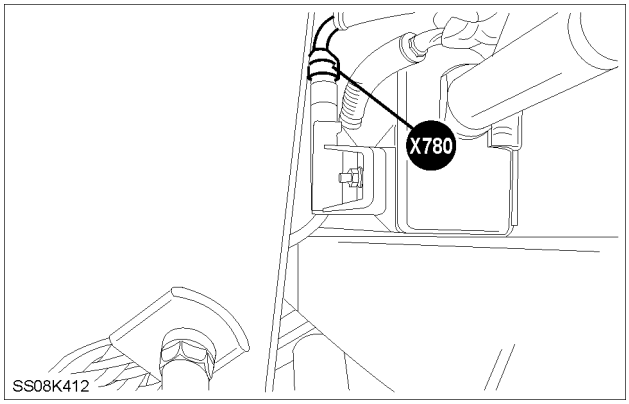

SS08K412 1

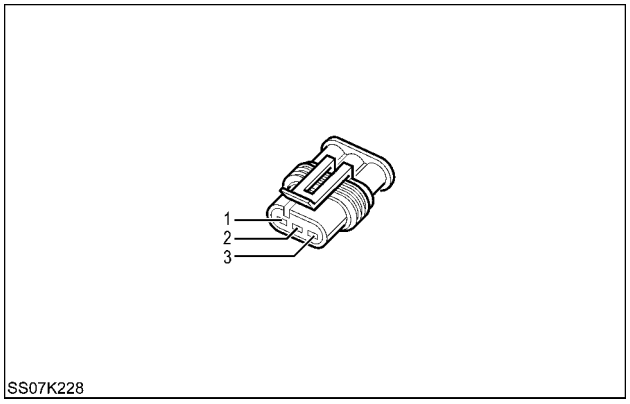

SS07K228 2

REAR RIGHT HAND UNDERSIDE OF CAB

X781 ACTUATOR PTO SHIFT

POS.	WIRE NUMBER	CIRCUIT REFERENCE
1	2154 (N)	ESPTO ACTUATOR LOWER SPEED
2	2153 (R)	ESPTO ACTUATOR UPPER SPEED

NOTE: *For the wiring color code refer to,* ***Wiring harness - Overview (A.30.A)****.*

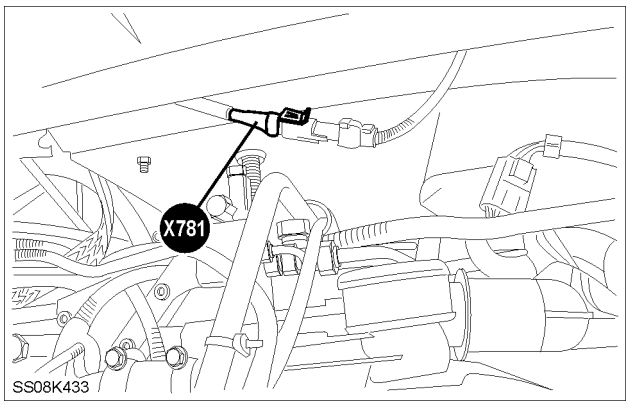

SS08K433 3

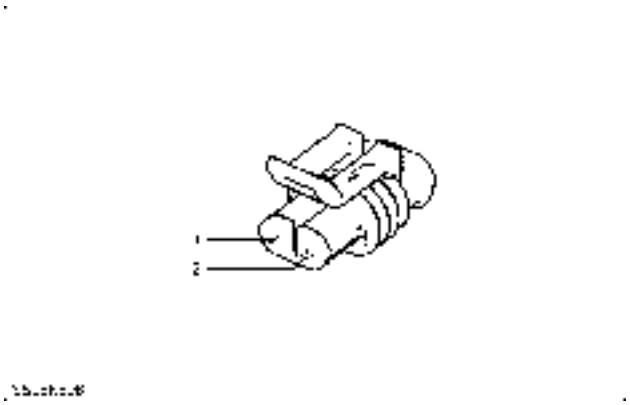

SS08K508 4

REAR RIGHT HAND UNDERSIDE OF CAB

https://tractormanualz.com/

X782 ESPTO DRIVE UPPER SPEED RELAY

POS.	WIRE NUMBER	CIRCUIT REFERENCE
30	2153 (R)	ESPTO ACTUATOR UPPER SPEED
85	2050BA (G)	PTO SUPPLY / DOG SUPPLY
86	2151 (K)	EPTO DRIVE RELAY UPPER SPEED
87A	2155A (N)	ESPTO ACTUATOR POWER +12V
87	2050AY (G)	PTO SUPPLY / DOG SUPPLY

NOTE: *For the wiring color code refer to,* ***Wiring harness - Overview (A.30.A)****.*

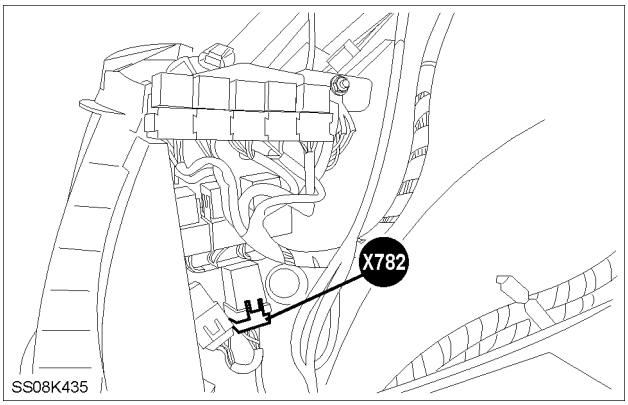

SS08K435 5

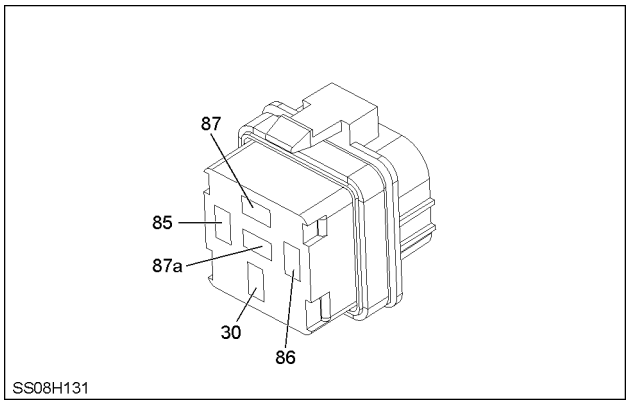

SS08H131 6

BEHIND RIGHT HAND TRIM

X783 ESPTO DRIVE LOWER SPEED RELAY

POS.	WIRE NUMBER	CIRCUIT REFERENCE
30	2154 (N)	ESPTO ACTUATOR LOWER SPEED
85	2050BB (G)	PTO SUPPLY / DOG SUPPLY
86	2152 (K)	ESPTO DRIVE RELAY LOWER SPEED
87A	2155B (N)	ESPTO ACTUATOR POWER +12V
87	2050AZ (G)	PTO SUPPLY / DOG SUPPLY

NOTE: *For the wiring color code refer to,* ***Wiring harness - Overview (A.30.A)****.*

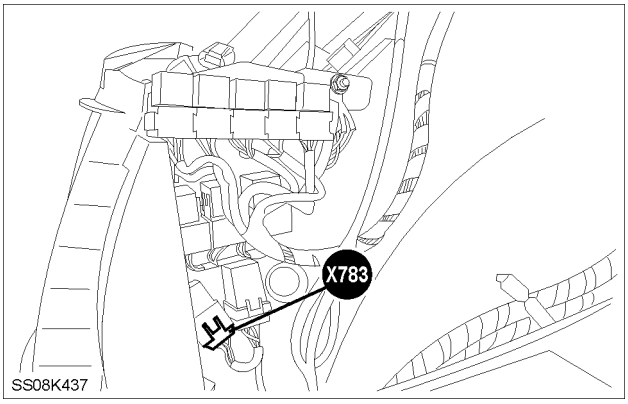

SS08K437 7

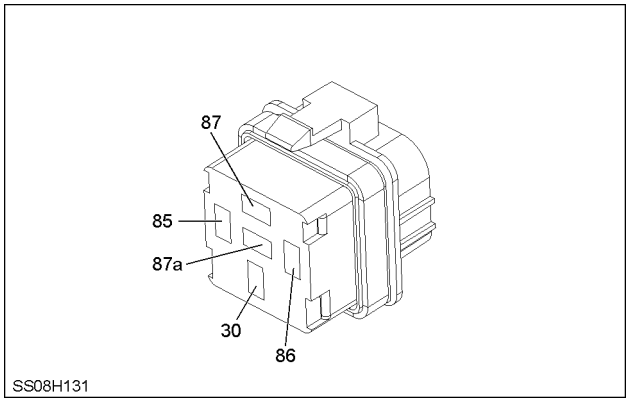

SS08H131 8

BEHIND RIGHT HAND TRIM

https://tractormanualz.com/

X784 PTO SPEED SELECT SWITCH

POS.	WIRE NUMBER	CIRCUIT REFERENCE
1	2050BC (G)	PTO SUPPLY / DOG SUPPLY
2	2159 (U)	ESPTO UPPER SPEED
3	2158 (U)	ESPTO LOWER SPEED
6	2157 (N)	ESPTO NEUTRAL

NOTE: *For the wiring color code refer to,* ***Wiring harness - Overview (A.30.A)****.*

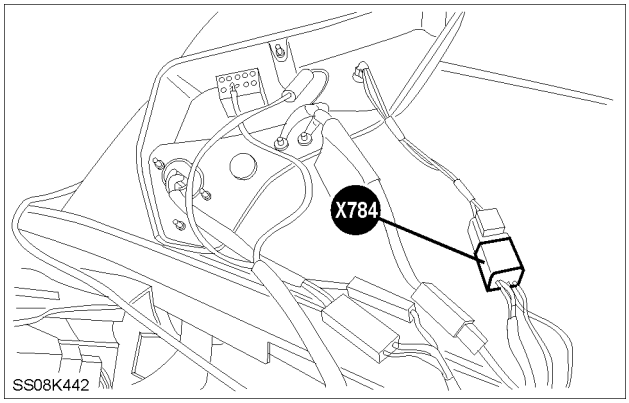

SS08K442 9

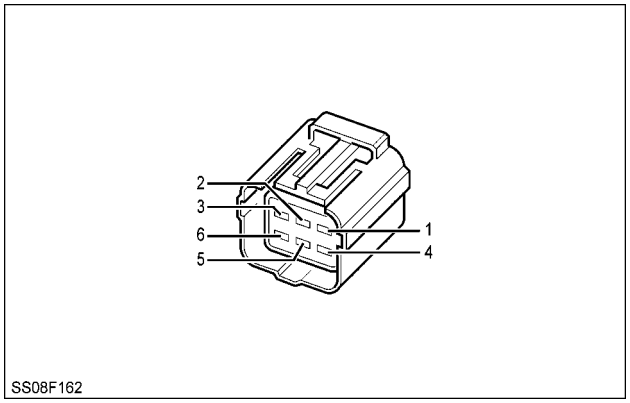

SS08F162 10

BEHIND RIGHT HAND SWITCH PANEL

X787 CONNECTOR ADJUST MOTOR

POS.	WIRE NUMBER	CIRCUIT REFERENCE
1	181S (L)	BLOWER MOTOR FEED
2	57E (B)	EARTH (ALL)

NOTE: *For the wiring color code refer to,* ***Wiring harness - Overview (A.30.A)****.*

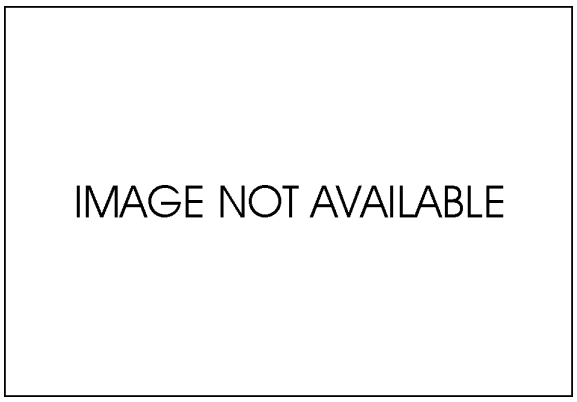

INA 11

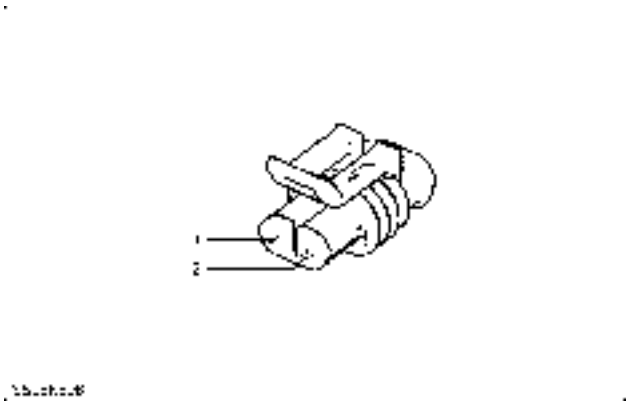

SS08K508 12

IN GARU

https://tractormanualz.com/

X788 ELECTRIC ADJUST MOTOR

POS.	WIRE NUMBER	CIRCUIT REFERENCE
1	181P (W) / 181M (W)	BLOWER MOTOR FEED
2	57 (B) / 57A (B)	EARTH (ALL)
3	57E (G) / 57D (G)	EARTH (ALL)
4	181T (L) / 181D (L)	BLOWER MOTOR FEED

NOTE: *For the wiring color code refer to,* ***Wiring harness - Overview (A.30.A)****.*

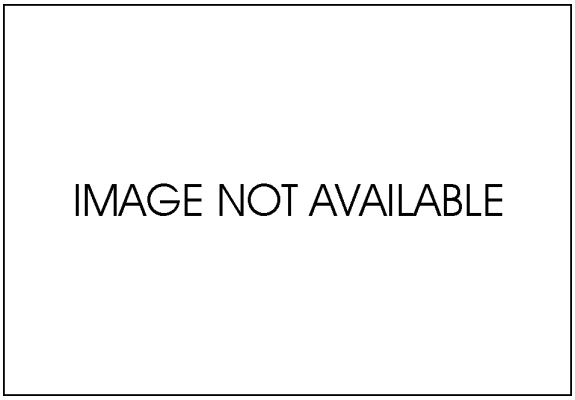

INA 13

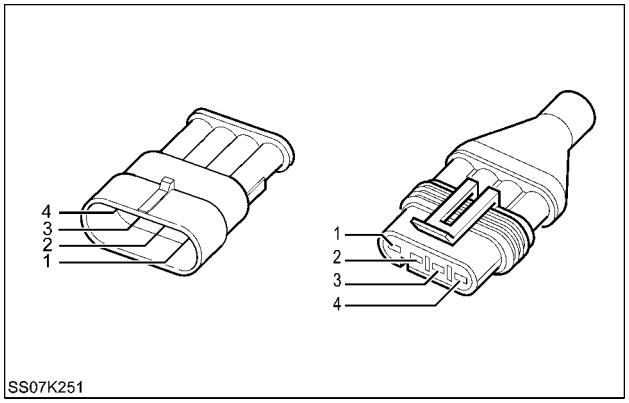

SS07K251 14

IN GARU

https://tractormanualz.com/

Connector - Component diagram 80

X800 FRONT SCREEN HEATER A+

POS.	WIRE NUMBER	CIRCUIT REFERENCE
1	1080A (R)	FRONT SCREEN HEATER

NOTE: *For the wiring color code refer to,* ***Wiring harness - Overview (A.30.A)****.*

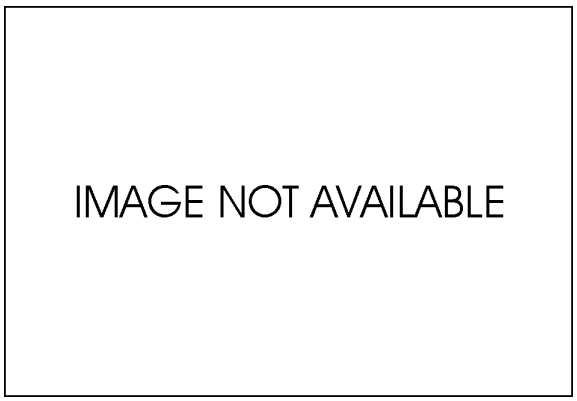

INA 1

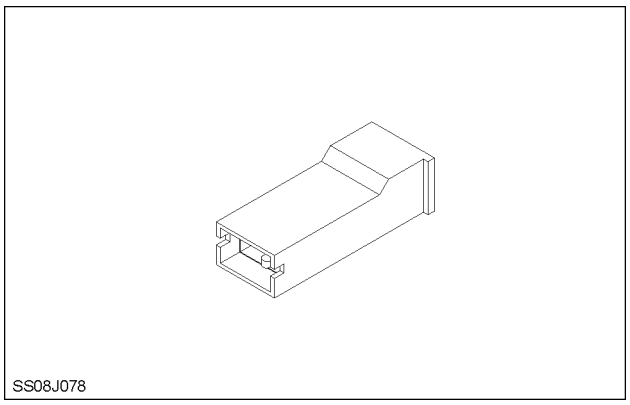

SS08J078 2

FRONT CAB

X801 FRONT SCREEN HEATER A-

POS.	WIRE NUMBER	CIRCUIT REFERENCE
1	57VA (B)	EARTH (ALL)

NOTE: *For the wiring color code refer to,* ***Wiring harness - Overview (A.30.A)****.*

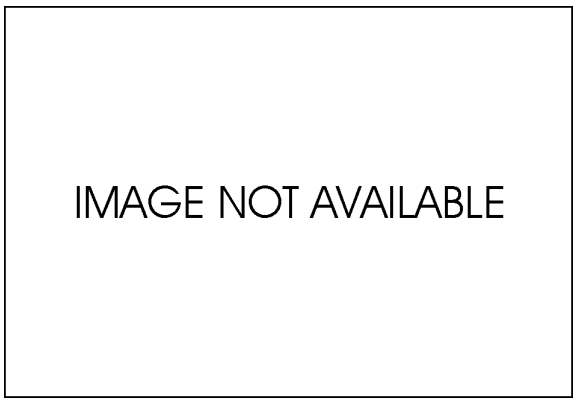

INA 3

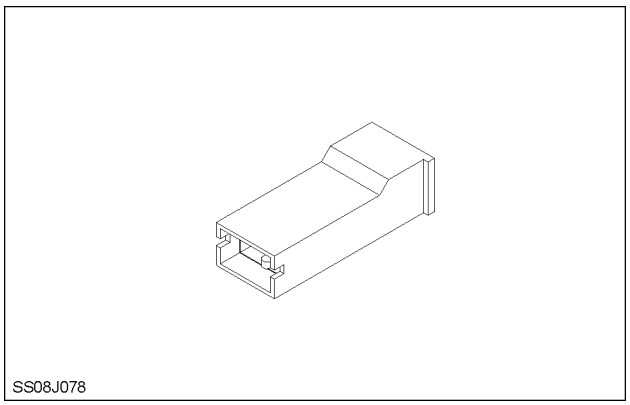

SS08J078 4

FRONT CAB

https://tractormanualz.com/

X802 FRONT SCREEN HEATER B+

POS.	WIRE NUMBER	CIRCUIT REFERENCE
1	1080B (R)	FRONT SCREEN HEATER

NOTE: *For the wiring color code refer to,* ***Wiring harness - Overview (A.30.A)****.*

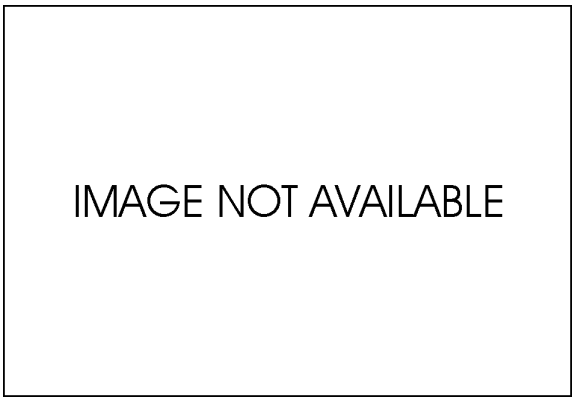

INA 5

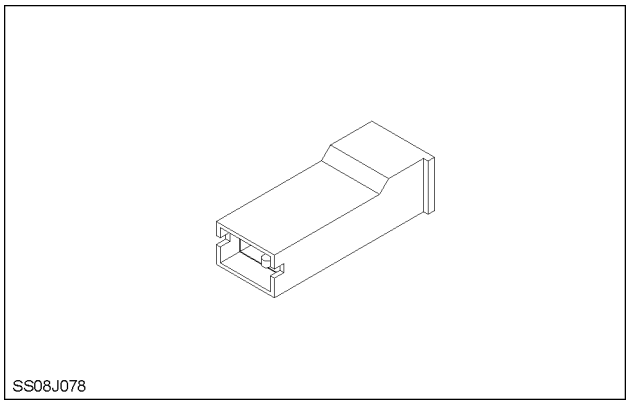

SS08J078 6

FRONT CAB

X803 FRONT SCREEN HEATER B-

POS.	WIRE NUMBER	CIRCUIT REFERENCE
1	57TZ (B)	EARTH (ALL)

NOTE: *For the wiring color code refer to,* ***Wiring harness - Overview (A.30.A)****.*

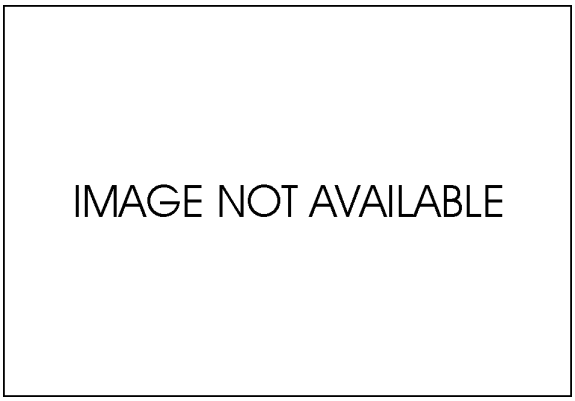

INA 7

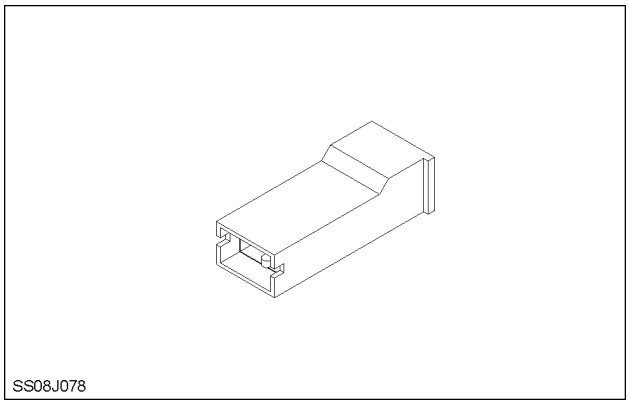

SS08J078 8

FRONT CAB

https://tractormanualz.com/

Connector - Component diagram 81

X810 BATTERIE TO CAB. MINUS SUPPLY

POS.	WIRE NUMBER	CIRCUIT REFERENCE
1	57 (B)	EARTH (ALL)

NOTE: *For the wiring color code refer to,* ***Wiring harness - Overview (A.30.A)****.*

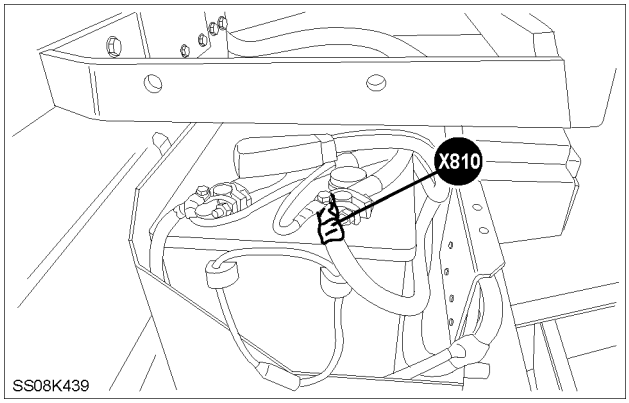

SS08K439 1

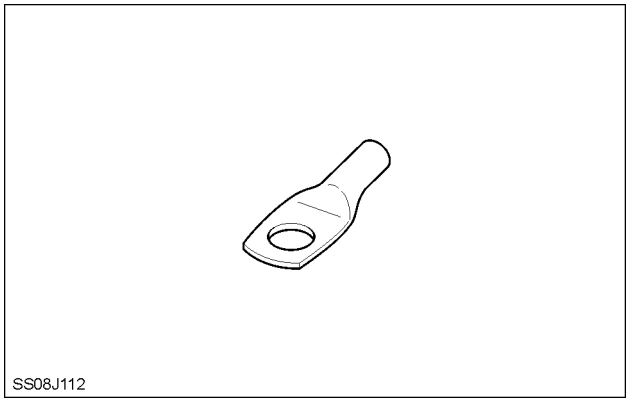

SS08J112 2

RIGHT HAND BEHIND STEPS

https://tractormanualz.com/

X811 VISTRONIC FAN

POS.	WIRE NUMBER	CIRCUIT REFERENCE
1	6300 (N)	FAN SPEED
2	57U (B)	EARTH (ALL)
3	57V (B)	EARTH (ALL)
4	6330 (N)	VISTRONIC FAN INPUT
5	6320 (N)	FAN 5V REF.

NOTE: *For the wiring color code refer to,* ***Wiring harness - Overview (A.30.A)****.*

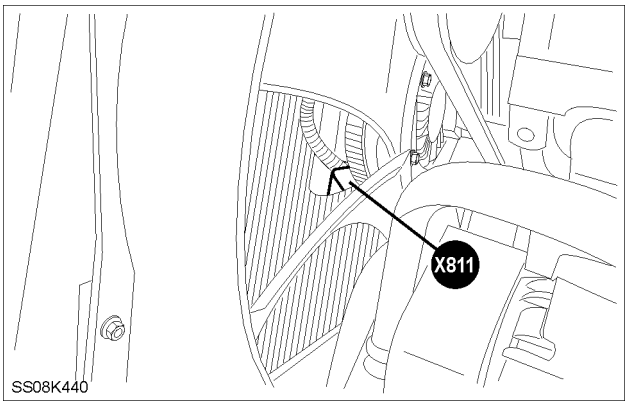

SS08K440 3

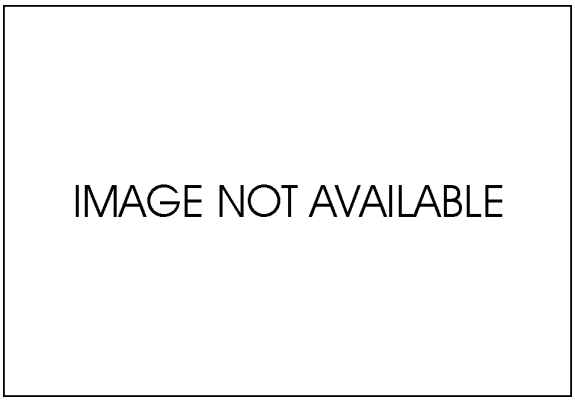

INA 4

FRONT LEFT HAND ENGINE

X812 ISO BUS BREAK AWAY FRONT

POS.	WIRE NUMBER	CIRCUIT REFERENCE
1	5920E (R)	ISO BUS CAN SUPPLY POSITIVE
2	5900E (Y)	ISO BUS CAN SIGNAL LOW
3	5915E (B)	ISO BUS CAN SUPPLY GROUND
4	5910E (G)	ISO BUS CAN SIGNAL HIGH

NOTE: *For the wiring color code refer to,* ***Wiring harness - Overview (A.30.A)****.*

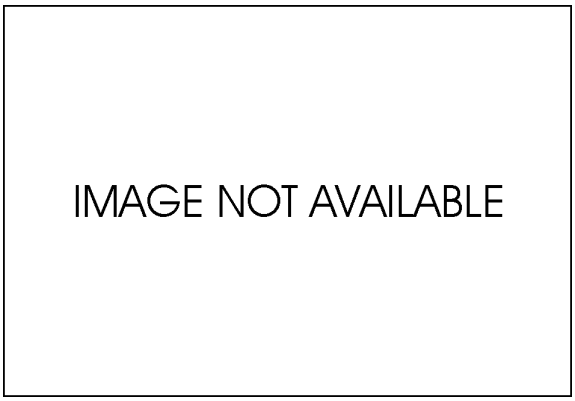

INA 5

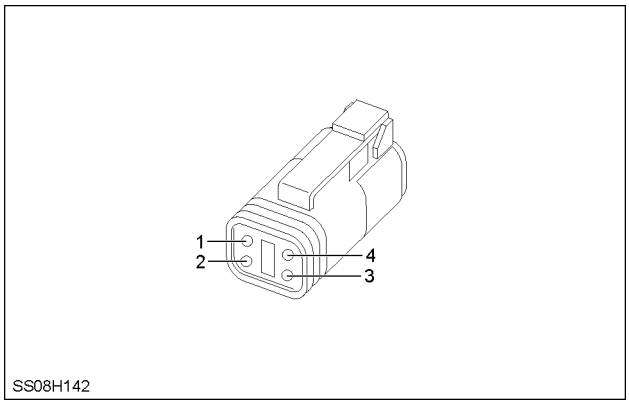

SS08H142 6

https://tractormanualz.com/

X813 POWER FUSE PF 6 ISO BUS FRONT

POS.	WIRE NUMBER	CIRCUIT REFERENCE
1	150AT (N)	BATTERY FEED (UNFUSED)(ALL)
1	150AW (N)	BATTERY FEED (UNFUSED)(ALL)

NOTE: *For the wiring color code refer to,* ***Wiring harness - Overview (A.30.A)****.*

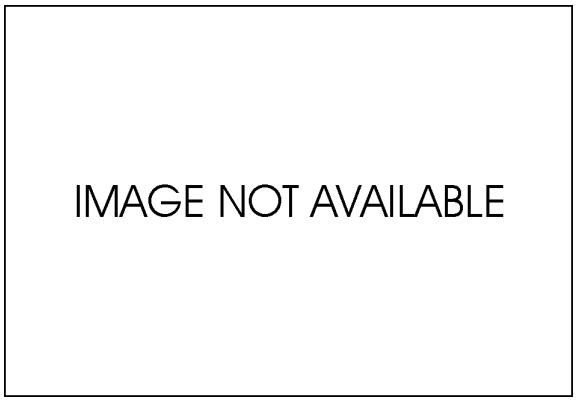

INA 7

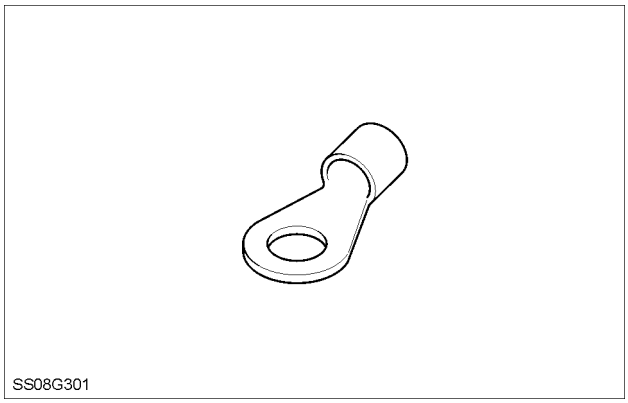

SS08G301 8

RIGHT HAND BEHIND STEPS

X814 POWER FUSE PF 7 ISO BUS FRONT

POS.	WIRE NUMBER	CIRCUIT REFERENCE
1	150AV (N)	BATTERY FEED (UNFUSED)(ALL)
1	150AX (N)	BATTERY FEED (UNFUSED)(ALL)

NOTE: *For the wiring color code refer to,* ***Wiring harness - Overview (A.30.A)****.*

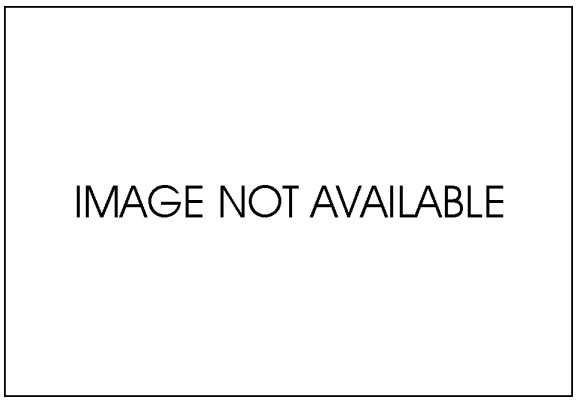

INA 9

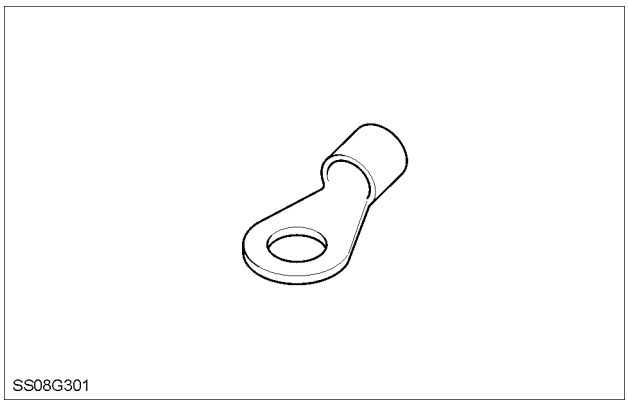

SS08G301 10

RIGHT HAND BEHIND STEPS

https://tractormanualz.com/

X815 ISO BUS POWER SUPPLY FRONT

POS.	WIRE NUMBER	CIRCUIT REFERENCE
1	150AS (N)	BATTERY FEED (UNFUSED)(ALL)

NOTE: *For the wiring color code refer to,* ***Wiring harness - Overview (A.30.A)****.*

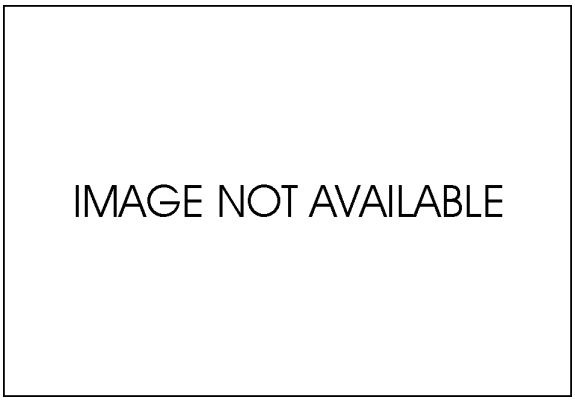

INA 11

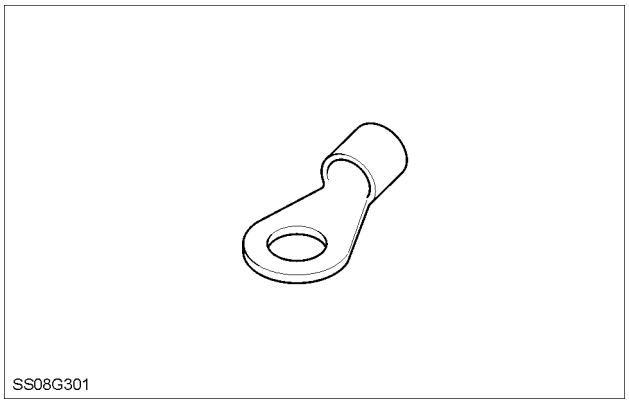

SS08G301 12

RIGHT HAND BEHIND STEPS

X816 HIGH MOUNT HEADLAMP SWITCH

POS.	WIRE NUMBER	CIRCUIT REFERENCE
1	1027BB (U)	HEADLAMP MAIN BEAM
2	1027B (U)	HEADLAMP MAIN BEAM
3	1027A (U)	HEADLAMP MAIN BEAM
4	1030BB (U)	HEADLAMP DIP BEAM
5	1030B (U)	HEADLAMP DIP BEAM
6	1030A (U)	HEADLAMP DIP BEAM

NOTE: For the wiring color code refer to, **Wiring harness - Overview (A.30.A)**.

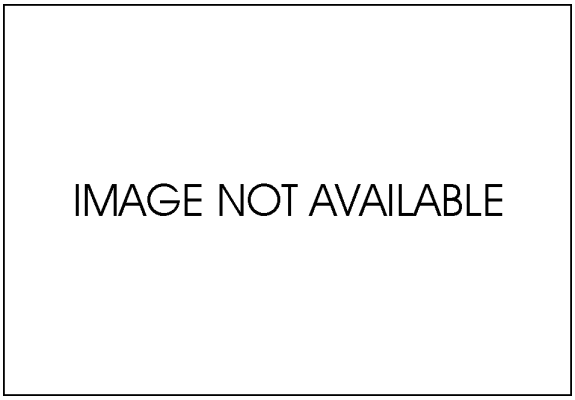

INA 13

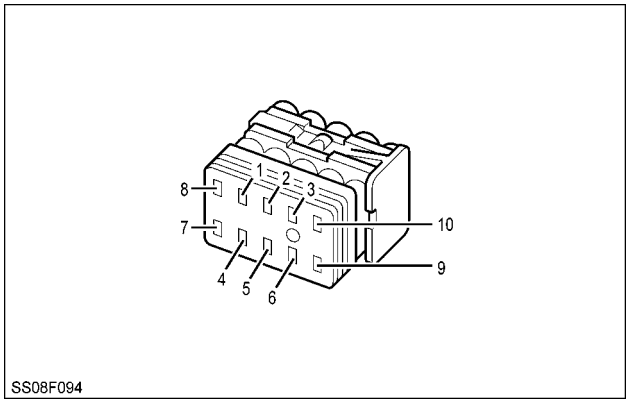

SS08F094 14

REAR RIGHT HAND C-PILLAR

https://tractormanualz.com/

X817 FRONT HITCH AND FRONT PTO

POS.	WIRE NUMBER	CIRCUIT REFERENCE
1	2044 (O) / (N)	PTO SOLENOID-FRONT RETURN(-)
2	2043 (O) / (P)	PTO SOLENOID-FRONT
3	2260 (O)	PTO FRONT - SPEED SIGNAL
4	60AE (B/W) / (S)	SENSOR GROUND
5	2570 (R) / -	FRONT HITCH RAISE SOLENOID
6	2530B (N) / -	FRONT HITCH V REF
7	2510 (N) / (W)	FRONT HITCH POSITION SIGNAL
8	57JT (B)	EARTH (ALL)
9	1010B (G) / (R)	IGNITION RELAY (COIL)
10	2556 (O) / (U)	FRONT HITCH SWITCH COMMON RAIL
11	2590 (TN) / (G)	EXTERNAL SWITCH FHPL UP
12	2591 (TN) / (Y)	EXTERNAL SWITCH FHPL DOWN

NOTE: *For the wiring color code refer to,* ***Wiring harness - Overview (A.30.A)****.*

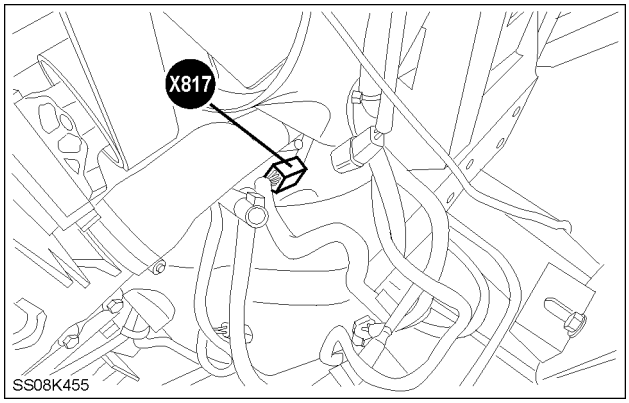

SS08K455 15

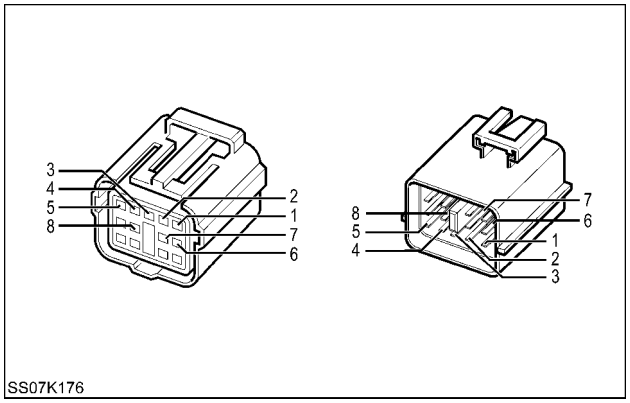

SS07K176 16

FRONT RIGHT HAND ENGINE

X818 HEADLAMP 2 LH GRAB RAIL

POS.	WIRE NUMBER	CIRCUIT REFERENCE
1	1027B (UW)	HEADLAMP MAIN BEAM
2	1030B (UR)	HEADLAMP DIP BEAM
3	57B (B)	EARTH (ALL)

NOTE: For the wiring color code refer to, **Wiring harness - Overview (A.30.A)**.

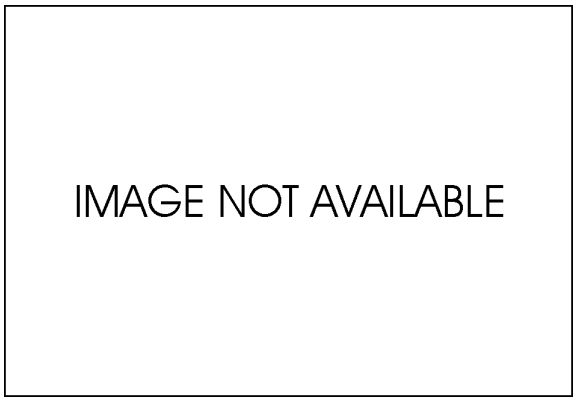

INA 17

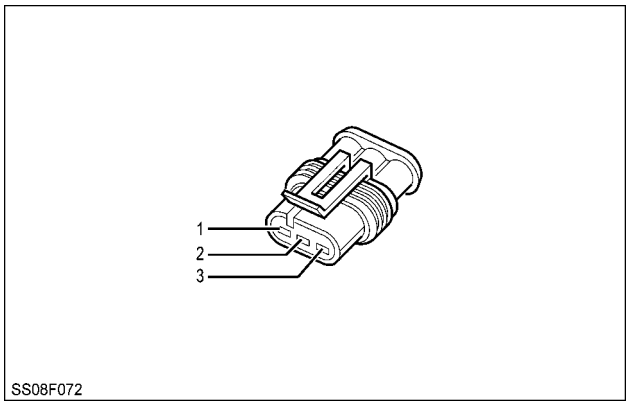

SS08F072 18

LEFT HAND ON GRABRAIL

https://tractormanualz.com/

X819 HEADLAMP 1 RH GRAB RAIL

POS.	WIRE NUMBER	CIRCUIT REFERENCE
1	1027A (UW)	HEADLAMP MAIN BEAM
2	1030A (UR)	HEADLAMP DIP BEAM
3	57A (B)	EARTH (ALL)

NOTE: For the wiring color code refer to, **Wiring harness - Overview (A.30.A)**.

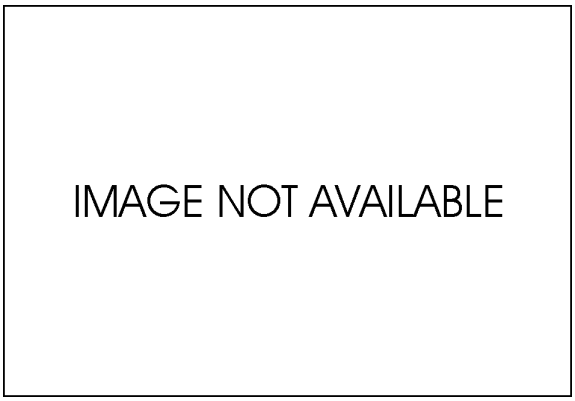

INA 19

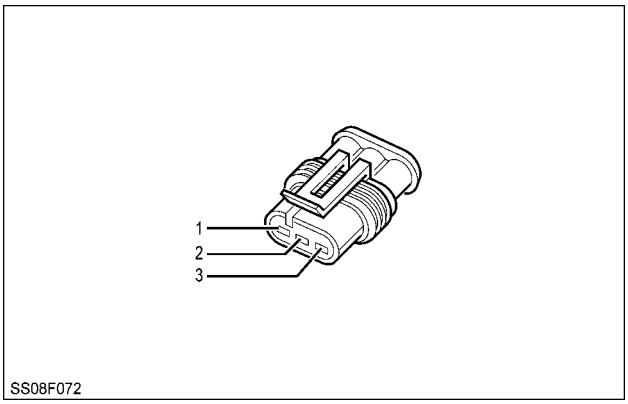

SS08F072 20

RIGHT HAND ON GRABRAIL

https://tractormanualz.com/

Connector - Component diagram 82

X820 GARU SWCD

POS.	WIRE NUMBER	CIRCUIT REFERENCE
1	5500J (R)	EHR CAN HIGH
2	5510J (U)	EHR CAN LOW
3	5000 (L)	EDC MEMORY POWER
5	5910F (G)	ISO BUS CAN SIGNAL HIGH
6	5900F (Y)	ISO BUS CAN SIGNAL LOW
9	5960 (Y)	RS232 OUTPUT TECU
10	5955 (Y)	RS232 INPUT TECU
13	5000 (L)	EDC MEMORY POWER
14	57 (B)	EARTH (ALL)
15	7000AT (U)	TRANS CONTROL SUPPLY

NOTE: *For the wiring color code refer to,* ***Wiring harness - Overview (A.30.A)****.*

IMAGE NOT AVAILABLE

INA 1

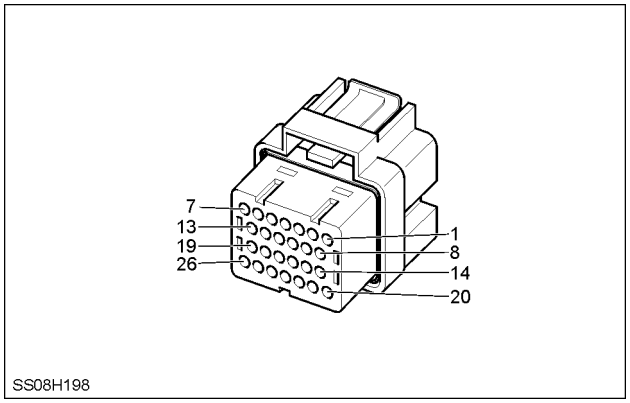

SS08H198 2

RIGHT HAND SIDE CAB

X823 MEGA FUSE (125A) GRIDHEATER / FUELHEATER

POS.	WIRE NUMBER	CIRCUIT REFERENCE
1	(R)	SUPPLY B+
2	(R)	HIGH CURRENT RELAY

NOTE: *For the wiring color code refer to,* ***Wiring harness - Overview (A.30.A)****.*

IMAGE NOT AVAILABLE

INA 3

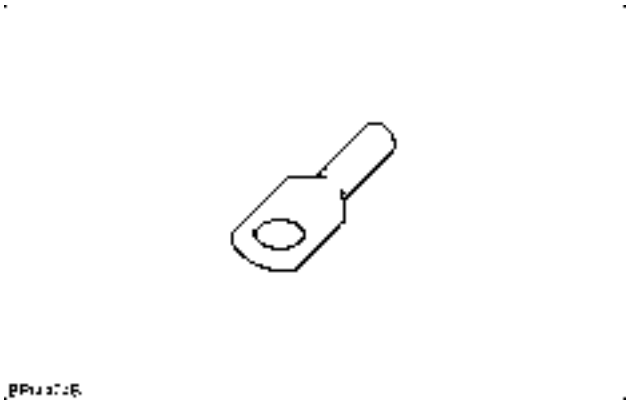

BRI4474B 4

BOTTOM REAR ENGINE

https://tractormanualz.com/

X825 INJECTOR CYLINDER 1 & 2 (EDC16)

POS.	WIRE NUMBER	CIRCUIT REFERENCE
1	N/B	PLUS
2	S/R	MINUS
3	S/Y	PLUS
4	N/W	MINUS

NOTE: *For the wiring color code refer to,* ***Wiring harness - Overview (A.30.A)****.*

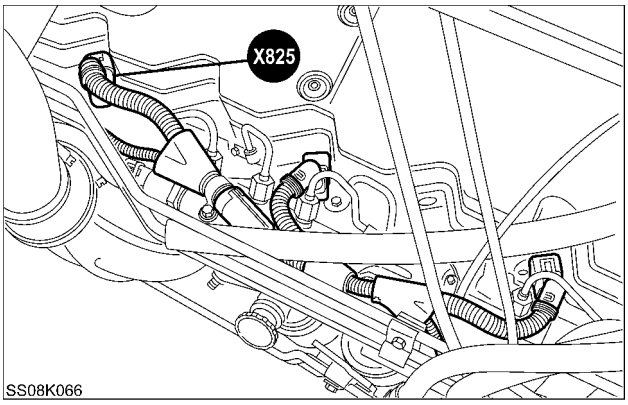

SS08K066 5

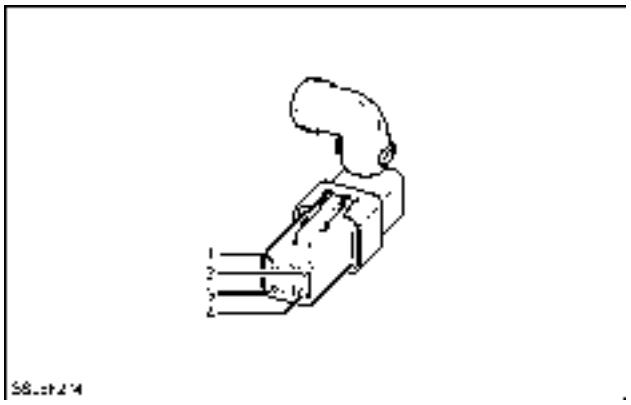

SS08F274 6

LEFT HAND TOP ENGINE

X826 INJECTOR CYLINDER 3 & 4 (EDC16)

POS.	WIRE NUMBER	CIRCUIT REFERENCE
1	W/G	PLUS
2	U/O	MINUS
3	S/B	PLUS
4	B/P	MINUS

NOTE: *For the wiring color code refer to,* ***Wiring harness - Overview (A.30.A)****.*

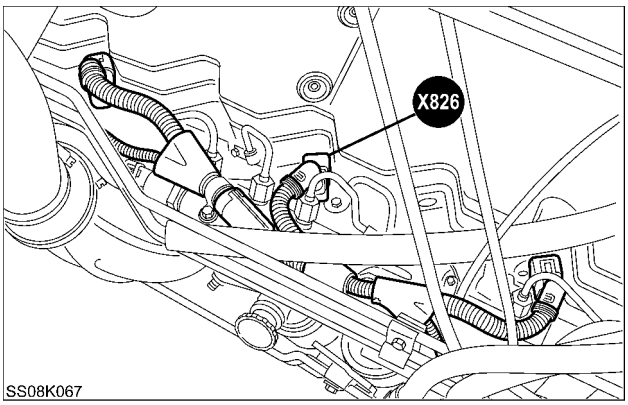

SS08K067 7

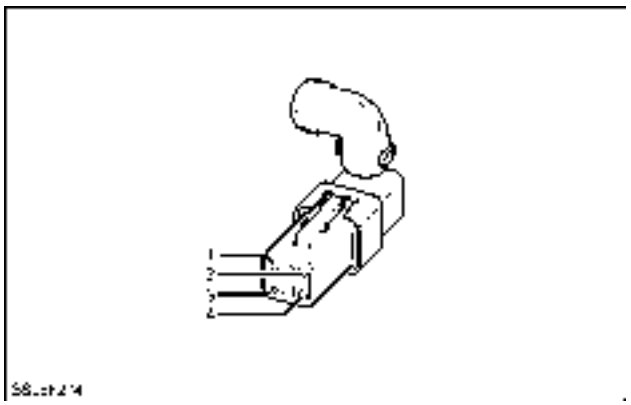

SS08F274 8

LEFT HAND TOP ENGINE

https://tractormanualz.com/

X827 INJECTOR CYLINDER 5 & 6 (EDC16)

POS.	WIRE NUMBER	CIRCUIT REFERENCE
1	U/B	PLUS
2	O/W	MINUS
3	U/R	PLUS
4	Y/B	MINUS

NOTE: *For the wiring color code refer to,* ***Wiring harness - Overview (A.30.A)****.*

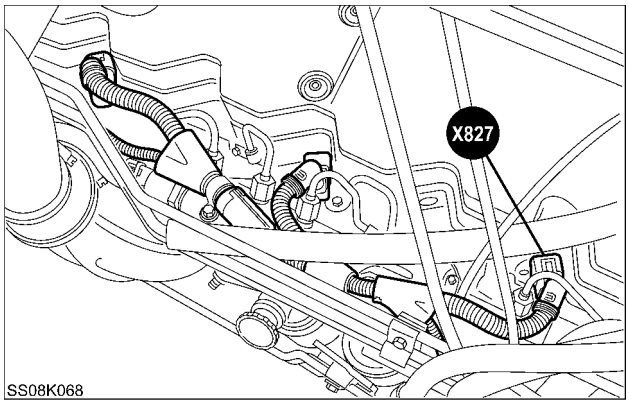

SS08K068 9

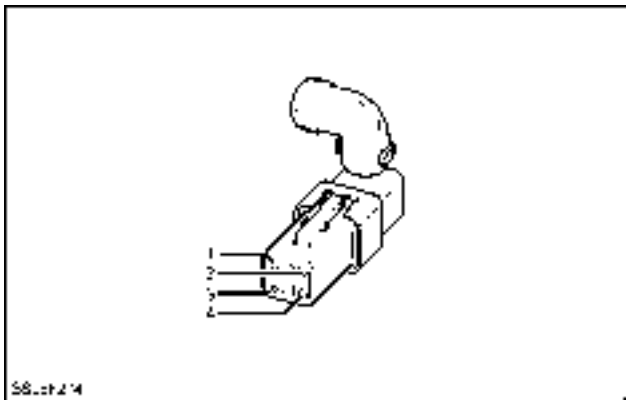

SS08F274 10

LEFT HAND TOP ENGINE

X828 BOOST PRESSURE / TEMPERATURE SENSOR (EDC16)

POS.	WIRE NUMBER	CIRCUIT REFERENCE
1	Y/B	
2	W/R	
3	O/U	
4	U/B	

NOTE: *For the wiring color code refer to,* ***Wiring harness - Overview (A.30.A)****.*

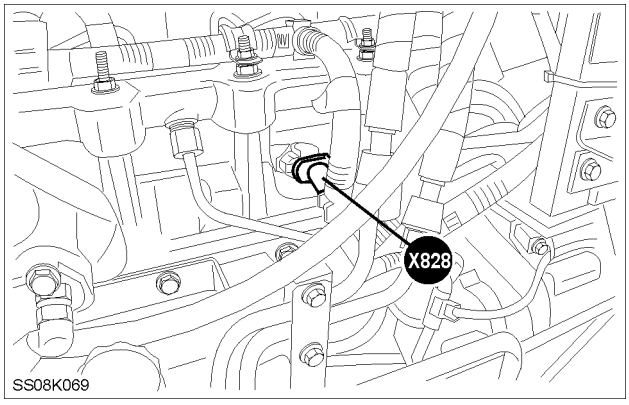

SS08K069 11

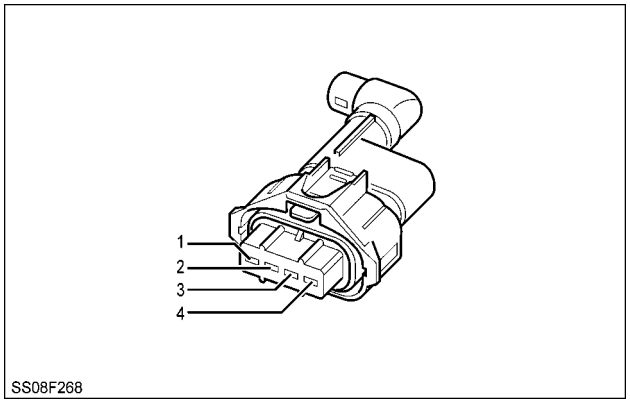

SS08F268 12

LEFT HAND ENGINE

https://tractormanualz.com/

X829 OIL PRESSURE / TEMPERATURE SENSOR (EDC16)

POS.	WIRE NUMBER	CIRCUIT REFERENCE
1	Y/G	
2	K/B	
3	N/B	
4	Y/R	

NOTE: *For the wiring color code refer to,* ***Wiring harness - Overview (A.30.A)****.*

SS08K070 13

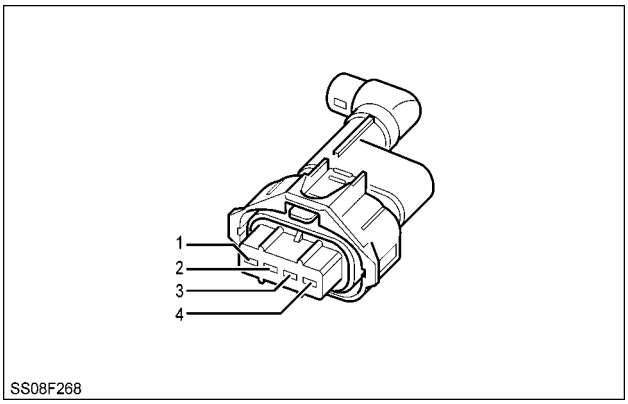

SS08F268 14

FRONT LOWER RIGHT HAND ENGINE

https://tractormanualz.com/

Connector - Component diagram 83

X830 RAIL PRESSURE SENSOR (EDC16)

POS.	WIRE NUMBER	CIRCUIT REFERENCE
1	W/B	
2	R/G	
3	S/B	

NOTE: *For the wiring color code refer to,* ***Wiring harness - Overview (A.30.A)****.*

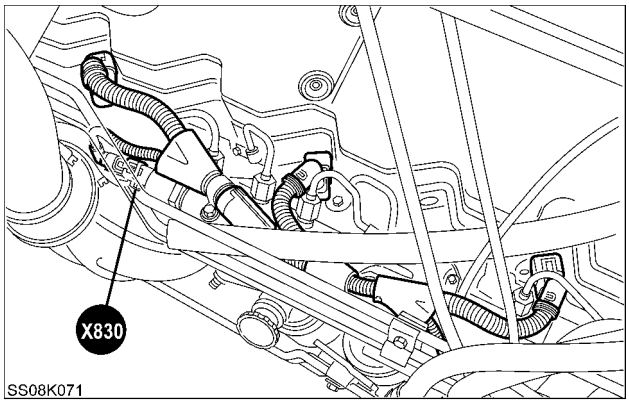

SS08K071 1

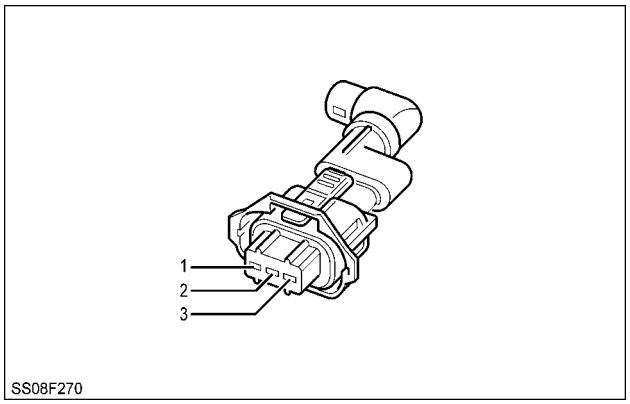

SS08F270 2

LEFT HAND TOP ENGINE

X831 COOLANT TEMPERATURE SENSOR

POS.	WIRE NUMBER	CIRCUIT REFERENCE
1	O/G	
2	W/Y	

NOTE: *For the wiring color code refer to,* ***Wiring harness - Overview (A.30.A)****.*

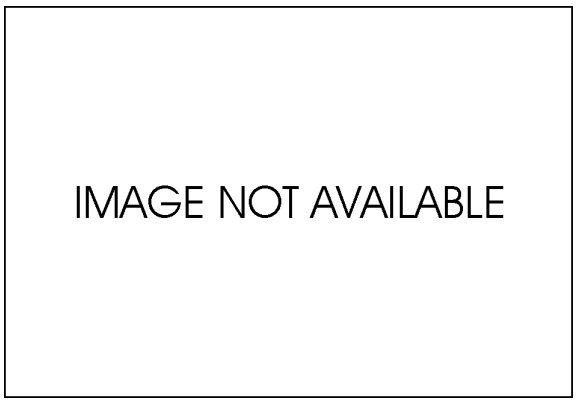

INA 3

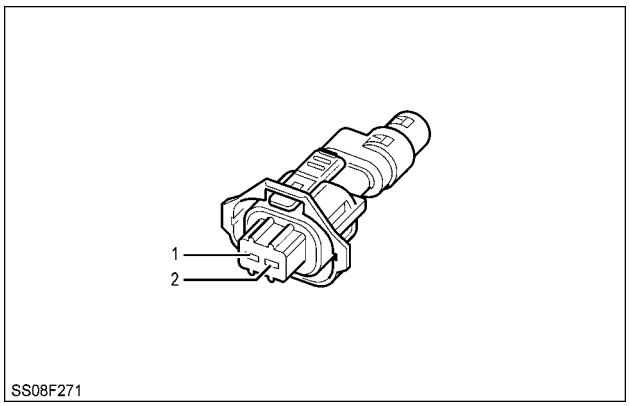

SS08F271 4

FRONT RIGHT HAND ENGINE

https://tractormanualz.com/

X832 FUEL TEMPERATURE SENSOR

POS.	WIRE NUMBER	CIRCUIT REFERENCE
1	W/U	
2	O/B	

NOTE: *For the wiring color code refer to,* ***Wiring harness - Overview (A.30.A)****.*

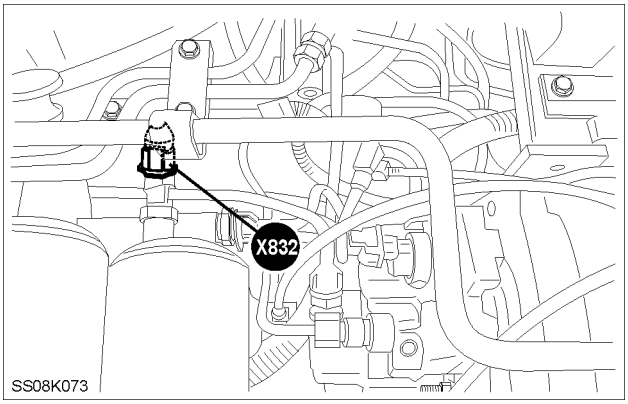

SS08K073 5

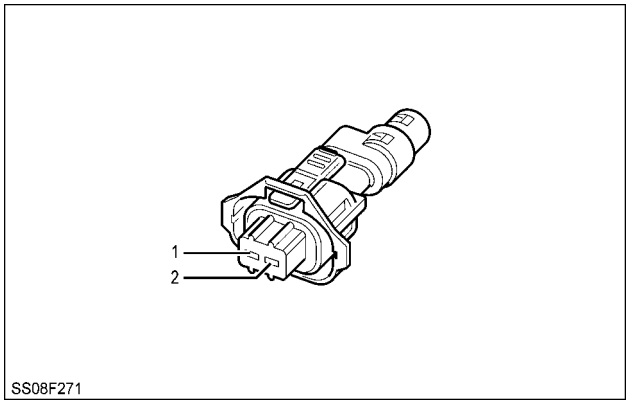

SS08F271 6

LEFT HAND ENGINE

X833 HIGH PRESSURE PUMP

POS.	WIRE NUMBER	CIRCUIT REFERENCE
1	G	
2	O	

NOTE: *For the wiring color code refer to,* ***Wiring harness - Overview (A.30.A)****.*

SS08K074 7

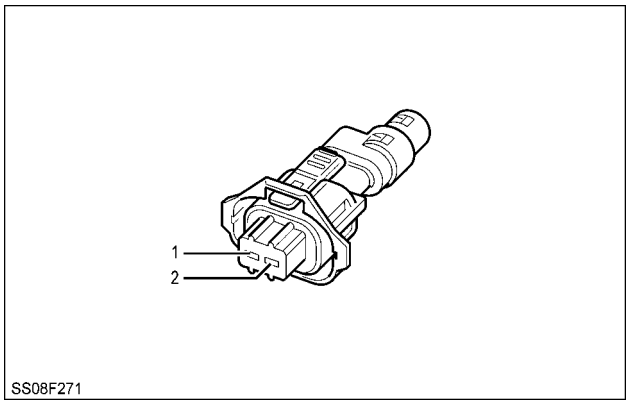

SS08F271 8

REAR LEFT HAND ENGINE

https://tractormanualz.com/

X834 INCREMENT SPEED SENSOR

POS.	WIRE NUMBER	CIRCUIT REFERENCE
1	W	
2	R	
3	B	

NOTE: *For the wiring color code refer to,* ***Wiring harness - Overview (A.30.A)****.*

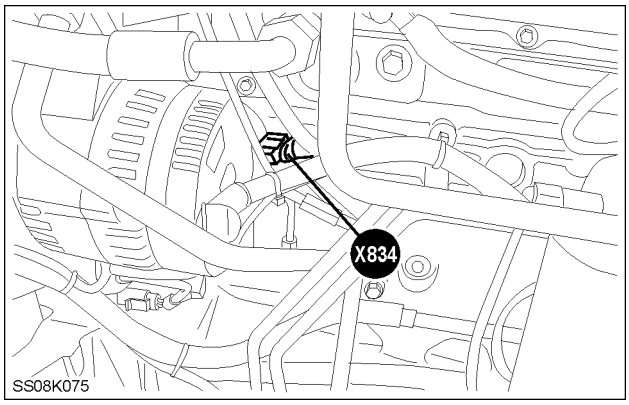

SS08K075 9

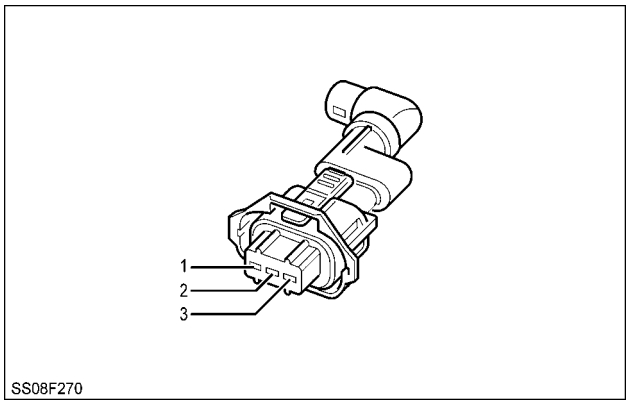

SS08F270 10

FRONT LEFT HAND ENGINE

X835 CAMSHAFT SPEED SENSOR

POS.	WIRE NUMBER	CIRCUIT REFERENCE
1	W	
2	R	
3	G	

NOTE: *For the wiring color code refer to,* ***Wiring harness - Overview (A.30.A)****.*

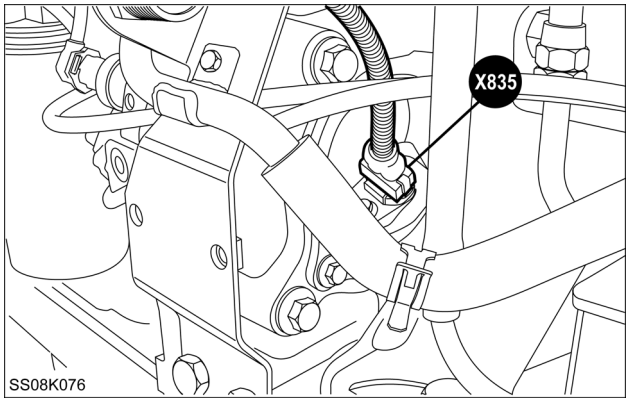

SS08K076 11

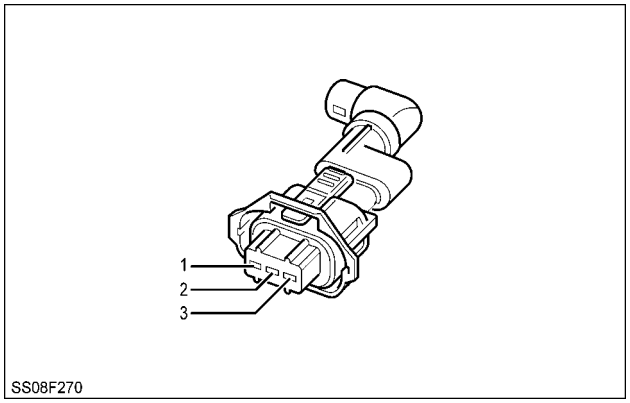

SS08F270 12

REAR LEFT HAND ENGINE

https://tractormanualz.com/

Wiring harness - Overview

Wire Colour Codes							
B	Black	S	Slate (Grey)	G	Green	P	Purple
N	Brown	R	Red	LG	Light Green	K	Pink
LN	Light Brown	O	Orange	U	Blue	W	White
L	Lilac	Y	Yellow	TQ	Turquoise		

Wire Code References

CIRC	COLOUR	DESCRIPTION
1	R	BATTERY SUPPLY
10	G	IGNITION SUPPLY
11	G	IGNITION SUPPLY (2ND)
12	U	MAIN BEAM HEADLAMP FUSE SUPPLY
13	U	DIP BEAM HEADLAMP FUSE SUPPLY
15	U	LIGHTING SWITCH SUPPLY
28	Y	WIPER MOTOR (PARK RETURN)
29	G	MAIN FUEL SENDER SIGNAL
31	Y	ENGINE OIL PRESSURE SENDER SIGNAL
39	G	TEMPERATURE GAUGE SIGNAL
44	L	FLASHER UNIT (49A)
49	G	RIGHT HAND TURN SIGNAL
50	G	LEFT HAND TURN SIGNAL
56	W	WIPER MOTOR-HIGH
57	B	EARTH (ALL)
58	R	WIPER MOTOR-LOW
60	B/W	SENSOR GROUND
61	B	CASE GROUND
63	U	WIPER MOTOR-PARK FEED
65	W	DUAL POWER/4 WHEEL DRIVE SWITCH FEED
71	W	IGNITION SWITCHED FEEDS (UNFUSED)
84	G	WINDSHIELD WASHER SWITCH FEED
90	G	DUAL POWER / FOUR WHEEL DRIVE SWITCH
97	LG	WINDSHIELD WASHER FEED
137	W	RADIO FEED
138	P	RADIO KAM
150	N	BATTERY FEED (ALL)
155	G	BATTERY FEED (FUSED)
160	U	BATTERY SUPPLY ELECTRONICS
170	K/N/B	BATTERY ISOLATOR CONTROL SWITCH
171	W/TQ/B	BATTERY ISOLATOR RELAY COIL
172	W/TQ/Y	BATTERY ISOLATOR RELAY COIL (OFF)
173	W	BATTERY ISOLATOR RELAY COIL +12V
181	G	BLOWER MOTOR FEED
182	P	THERMOSTATIC SWITCH FEED
249	LG	SMV LAMPS RH
250	LG	SMV LAMPS LH
252	N	ALTERNATOR FIELD
349	LN	TRAILER TURN LAMPS RH
350	LN	TRAILER TURN LAMPS LH
365	G	LOW FUEL WARNING LAMP (DELAY ON)
366	O	LOW FUEL WARNING LAMP (DELAY SWITCH)
376	P	HORN FEED
587	LG	WINDSHIELD WIPER INTERMITTENT DELAY

https://tractormanualz.com/

CIRC	COLOUR	DESCRIPTION
649	O	COOLANT TEMPERATURE SWITCH
650	TQ	COOLANT LEVEL SWITCH
666	P	DOMELAMP SWITCH FEED
787	G	AUXILIARY FUEL PUMP SUPPLY
810	G	STOPLAMPS
820	R	STOPLAMP SWITCH LH
825	Y	PNEUMATIC TRAILER SOLENOID +12V
830	U	STOPLAMP SWITCH RH
840	G	R & L STOPLAMP SIGNAL
976	W/N/B	LICENCE PLATE LAMP / WORKLAMP DIODE
978	W	LICENCE PLATE LAMP
979	S	BLOWER MOTOR HIGH SPEED (4th)
980	N	THERMOSTAT SWITCH SUPPLY
981	G	A/C CLUTCH RELAY FEED
982	G	BLOWER MOTOR FEED
984	P	TEMPERATURE CONTROL POT. INPUT
986	P	TEMPERATURE CONTROL POT. OUTPUT
989	P	BLOWER MOTOR MEDIUM SPEED (2nd)
996	P	BLOWER MOTOR HIGH SPEED (3RD)
997	G	WORK LAMP-REAR FEED (OUTER)
998	G	WORK LAMP-REAR FEED (INNER)
999	G	BLOWER MOTOR LOW SPEED (1st)
1000	W	SAFETY START SWITCH SUPPLY
1001	W	STARTER SOLENOID FEED
1002	P	IMPLEMENT LAMP SWITCH SUPPLY
1003	G	SUPPLY TO GAUGES
1004	G	SUPPLY TO HORN AND HEADLAMP FLASH
1005	S	AIR CLEANER WARNING LAMP
1006	N	ALTERNATOR WARNING LAMP
1007	W	ETHER START BUTTON SUPPLY
1008	N	ETHER START SOLENOID SUPPLY
1009	N	ALTERNATOR FIELD
1010	G	IGNITION RELAY (COIL)
1011	Y	SUPPLY TO FUSES
1012	R	ILLUMINATION
1013	R	RIGHT HAND LAMPS
1014	R	LEFT HAND LAMPS
1015	P	DOME LAMP SWITCH FEED
1016	P	HORN FEED
1017	LG	AIR CON. THERMOSTATIC SWITCH FEED
1018	LG	AIR CONDITIONER CLUTCH
1019	G	WINDSHIELD WIPER FEED
1020	G	HAZARD SWITCH SUPPLY
1021	P	HAZARD SWITCH SUPPLY (BATTERY)
1022	N	THERMOSTART
1023	N	LIGHT SWITCH FEED
1024	R	RIGHT & LEFT HAND SIDELAMP FEED
1025	G	HZD SWITCH IGN FEED
1026	U	HIGH BEAM INDICATOR LAMP
1027	U	HEADLAMP MAIN BEAM
1028	U	HEADLAMP MAIN BEAM FUSE
1029	U	HEADLAMP DIP BEAM FUSE
1030	U	HEADLAMP DIP BEAM
1031	R	INSTRUMENT ILLUMINATION
1032	LG	TURN SIGNAL WARNING LAMP (TERM C)
1033	LG	TURN SIGNAL WARNING LAMP (TERM C2)

https://tractormanualz.com/

CIRC	COLOUR	DESCRIPTION
1034	LG	TURN SIGNAL WARNING LAMP (TERM C3)
1035	W	ENGINE OIL PRESSURE WARNING LAMP
1036	N	IGNITION SWITCH (BATTERY)
1037	LG	FLASHER UNIT (TERM 49A)
1038	LN	WINDSHIELD WIPER FEED-REAR
1039	LTG	NASO LIGHTS INPUT
1040	LG	FLASHER SWITCH TO RELAY-RHS CUT OUT
1041	LG	FLASHER SWITCH TO RELAY-LHS CUT OUT
1042	U	RELAY FEED ELECTRONICS
1043	U	RELAY FEED TO FUSES
1044	W/U/S	GRID HEATER FEEDBACK
1050	G	ACCESSORY FEED
1051	Y	SIDE LIGHTS RELAY COIL FEED
1052	Y	GET YOU HOME LIGHTS RELAY
1070	R	FRONT WORKLAMP SWITCH FEED
1071	P	WORKLAMP FRONT FEED
1072	P	WORKLAMP FRONT RELAY SUPPLY
1073	P	WORKLAMP FRONT FEED
1080	R	FRONT SCREEN HEATER
1082	Y	REAR SCREEN HEATER
1085	N	FRONT SCREEN HEATER RELAY CONTROL
1086	N	REAR SCREEN HEATER RELAY CONTROL
1090	R	REAR WORKLAMP RELAY SIGNAL
1091	R	FRONT WORKLAMP LOWER RELAY SIGNAL
1092	R	FRONT WORKLAMP RELAY SIGNAL
1093	R	FENDER WORKLAMP RELAY SIGNAL
1096	R	WORKLAMP FENDER MOUNTED
1097	R	FEED FRONT WORKLAMP OUTER
1098	W	FRONT WORKLAMP RELAY GROUND
1099	R	FEED FRONT WORKLAMP INNER
1119	G	RR WINDSHIELD WIPER
1120	G	RR WINDSHIELD WIPER PARK RETURN
1121	G	RR WINDSHIELD WASH
1130	N	ENGINE HEATER CONTROL TO IGN SWITCH
1135	G	THERMOSTART WARNING LAMP
1140	K	THERMOSTART INITIATE SIGNAL TO RELAY
1141	N	GRID HEATER +
1142	N	GRID HEATER FUSE TO PWR. RELAY
1143	N	POWER RELAY TO GRID HEATER
1150	N	CAL/SEL SWITCH
1160	R	REVERSE ALARM
1900	LG/B/S	HEATED FRONT WINDSCREEN SW SIGNAL
1901	LN/LG/S	HEATED FRONT WINDSCREEN POWER
1902	O/LN/S	HEATED FRONT WINDSCREEN WARNING LAMP
1903	P/B/S	HEATED REAR SCREEN SW SIGNAL
1904	Y/B/S	HEATED REAR SCREEN POWER
1905	U/W/S	HEATED REAR SCREEN WARNING LAMP
1920	O	LH MIRROR CONTROL SIDE-SIDE
1921	Y	LH MIRROR CONTROL UP-DOWN
1922	G	MIRROR CONTROL COMMON
1923	O	RH MIRROR CONTROL SIDE-SIDE
1924	Y	RH MIRROR CONTROL UP-DOWN
1925	R	MIRROR CONTROL +12V
1927	R	MIRROR ILLUMINATION
1928	R	HEATED MIRROR RELAY COIL +12V FROM SW
2001	N	BATTERY TEMPERATURE SENSOR
2002	N	BATTERY TEMP SENSOR (ALT OUTPUT)

https://tractormanualz.com/

CIRC	COLOUR	DESCRIPTION
2003	W	STARTER SOLENOID FEED
2005	O/U	AIR CON CLUTCH RELAY
2006	U	DE-ICING SWITCH - AIR CONDITIONER
2007	Y/U	AIR CONDITIONER LOW PRESSURE
2008	N/TQ	LIFT PUMP SUPPLY
2009	G	FUEL PUMP SUPPLY
2010	LG	AIRCON PLUG TO DE-ICING SWITCH
2011	P	HORN RETURN
2012	Y	TRANS OIL PRESSURE WARNING LAMP
2013	Y	PTO OVERSPEED WARNING LAMP
2014	G	ENGINE OIL PRESSURE SENDER (+5 VOLT)
2015	W	TACHOMETER SENSOR-SIGNAL
2016	Y	REAR AXLE SPEED SENSOR-SIGNAL
2017	B	BULB TEST (EIC)
2018	B	RADAR PRESENT
2019	B	ENGINE RPM (TACHO MODULE TO TPM)
2020	Y	ENGINE SHUT DOWN (TACHO MODULE TO TPM)
2021	Y	AXLE GROUND SPEED (TACHO MODULE TO TPM)
2022	B	PTO 540/1000 RPM (TACHO MODULE TO TPM)
2023	S	TPM TO EIC (AXLE SPEED DRIVE)
2024	S	RADAR SIGNAL DRIVE
2025	S	AUDIO ALARM CONTROL
2026	S	IMPLEMENT SWITCH SIGNAL
2027	R	RADAR ASSEMBLY (GUN) POWER
2028	G	RADAR ASSEMBLY (GUN) SIGNAL
2029	P	INSTRUMENT MEMORY SUPPLY
2030	N	ELECTRONIC DRAFT CONTROL
2031	Y	RADAR PRESENT
2040	LG	WATER IN FUEL SENSOR
2041	P	FUEL SHUT OFF
2042	O	PTO SOLENOID-REAR
2043	O	PTO SOLENOID-FRONT
2044	O	PTO SOLENOID-FRONT RETURN(-)
2045	O	PTO SWITCH TO MODULE
2046	O	PTO SWITCH (VCC)
2047	O	PTO SWITCH (VCCO)
2048	O	PTO SWITCH (VCCS)
2049	O	PTO SWITCH 1000RPM WARNING LAMP
2050	G	PTO SUPPLY / DOG SUPPLY
2051	O	PTO SOLENOID RETURN (-)
2052	W	PTO LUBE SOL
2053	P	PTO LUBE SOL RETURN
2055	W	PTO SYNCHRO GROUND SPEED ENGAGED
2056	W	PTO FENDER PTO SWITCH ON
2057	W	PTO FENDER SWITCH LH - RH LINK
2059	W	FENDER PTO SWITCH INPUT
2060	O	PTO 540/1000 SWITCH
2062	W	PTO TWIST SENSOR
2065	N	PTO ENGAGED
2068	N	PTO SOFT START
2069	U	PTO MANAGEMENT ON
2070	O	ENGINE SHUT OFF RELAY +12V
2080	O	ENGINE SHUT OFF RELAY
2087	O	EXHAUST BRAKE SOLENOID
2090	W/U	STARTER RELAY TO START INHIBIT SWITCH
2095	G	INSTRUMENT SIGNAL GROUND

https://tractormanualz.com/

CIRC	COLOUR	DESCRIPTION
2100	G	A/C CONDENSER MOTOR FEED
2120	LN	PTO BRAKE SIGNAL
2130	N	PTO BRAKE SOLENOID
2140	O	PTO SPEED SENSOR
2150	P	PTO EXT. SWITCH OFF
2151	K	EPTO DRIVE RELAY UPPER SPEED
2152	K	ESPTO DRIVE RELAY LOWER SPEED
2153	R	ESPTO ACTUATOR UPPER SPEED
2154	N	ESPTO ACTUATOR LOWER SPEED
2155	N	ESPTO ACTUATOR POWER +12V
2156	N	ESPTO ACTUATOR POS SIGNAL
2157	U	ESPTO NEUTRAL
2158	N	ESPTO LOWER SPEED
2159	U	ESPTO UPPER SPEED
2200	G	SERVICE MODE INITIATE
2245	K	PTO FRONT - SWITCH TO MODULE (MOM)
2248	K	PTO FRONT - SWITCH (VCCS)
2250	K	PTO FRONT - SUPPLY
2260	O	PTO FRONT - SPEED SIGNAL
2270	O	PTO FRONT - WARNING LAMP
2300	P	THEORETICAL GROUND SPEED ISO 11786 SKT.PIN#2
2310	P	IN/OUT OF WORK-HPL MODE ISO11786 SKT.PIN#4
2320	P	TRUE GROUND SPEED ISO 11786 SKT.PIN#1
2330	P	PTO SPEED ISO11876 SKT.PIN#3
2500	N	FRONT HITCH SOLENOID
2510	N	FRONT HITCH POSITION SIGNAL
2520	N	FRONT HITCH SET POSITION SIGNAL
2530	N	FRONT HITCH V REF
2540	N	FRONT HITCH +12v IGN
2550	N	FRONT HITCH OVERIDE SWITCH
2556	N/Y/S	FRONT HITCH SWITCH COMMON RAIL
2560	N	FRONT HITCH 0v REF
2570	R	FRONT HITCH RAISE SOLENOID
2571	S	FRONT HITCH RAISE SOLENOID RETURN(-)
2575	W	STEYR EFH TRANSPORT SIGNAL – BOSCH EFH MODULE
2576	W	STEYR EFH WORK SIGNAL – BOSCH EFH MODULE
2577	P	STEYR EFH DIAGNOSTIC LAMP – BOSCH EFH MODULE
2578	G	STEYR EFH TRANSPORT SWITCH – EOLBAU ARMREST
2579	N	STEYR EFH WORK SWITCH – EOLBAU ARMREST
2580	R	FRONT HITCH LOWER SOLENOID
2581	S	FRONT HITCH LOWER SOLENOID RETURN (-)
2582	LG	STEYR - EXT SWITCHES
2583	LN	STEYR - EXT SWITCHES
2584	W	OILMOTOR MODE
2585	LN	EFH RAISE SWITCH
2586	LN	EFH WORK SWITCH
2587	N	EFH EXTERNAL SWITCH +
2588	P	EFH EXTERNAL SWITCH UP
2589	R	EFH EXTERNAL SWITCH DOWN
2590	LN	EXTERNAL SWITCH FHPL UP
2591	LN	EXTERNAL SWITCH FHPL DOWN
2592	N	EFH VALVE DOWN +
2593	N	EFH VALVE DOWN -
2594	O	EFH POSITION SENSOR +
2595	P	EFH POSITION SENSOR SIGNAL
2596	R	EFH POSITION SENSOR -
2597	LN	EFH PRESSURE SENSOR SIGNAL

https://tractormanualz.com/

CIRC	COLOUR	DESCRIPTION
2598	S	EFH ACCUMULATOR 14 BAR
2599	N	EFH ACCUMULATOR 40 BAR
2600	Y	REAR AXLE SPEED MONITOR
3000	G	FLASHER UNIT SUPPLY (TERMINAL 49)
3001	G	LEFT HAND FLASHER CIRCUIT
3002	G	RIGHT HAND FLASHER CIRCUIT
3003	W	RADIO FEED
3004	G	RIGHT HAND TURN SIGNAL WARNING LAMP
3005	G	LEFT HAND TURN SIGNAL WARNING LAMP
3006	G	AUXILIARY FUEL TANK SENDER
3007	G	FUEL GAUGE FEED
3008	U	WORKLAMP WARNING LIGHT
3009	G	FLASHER UNIT SUPPLY B+
3010	R	FOGLAMP FEED
3011	R	FOGLAMP FEED
3012	G	HANDBRAKE WARNING FEED
3013	LG	AUXILIARY FUEL TANK SIGNAL
3014	R	HANDBRAKE WARNING LAMP SIGNAL
3015	P	ACCESSORY SOCKET (POWER)
3016	S	BRAKE FLUID LEVEL SIGNAL
3017	G	EPB SYSTEM FAILURE WARNING LIGHT
3018	G	FLASHER UNIT BUZZER FEED
3019	G	EPB SYSTEM OPERATION STATUS LIGHT
3020	Y	DUAL POWER SOLENOID SUPPLY
3022	Y	DUAL POWER (HIGH) WARNING LAMP
3023	P	EPB SYSTEM BATTERY ISOLATOR INTERLOCK
3024	Y	2WD SOLENOID
3025	Y	FOUR WHEEL DRIVE SOLENOID (MANUAL)
3026	Y	BRAKE PEDAL SWITCH - RIGHT
3027	Y	FOUR WHEEL DRIVE SOLENOID (AUTO)
3028	Y/G	BRAKE PEDAL SWITCH - LEFT
3029	LN	EPB +5V REFERENCE
3030	W	ACCESSORY RELAY SIGNAL
3031	N	EPB +12 HOT
3032	G	EPB +12 IGNITION
3033	O	EPB MOTOR SUPPLY “A”
3034	Y	EPB POSITION SIGNAL
3035	O	EPB MOTOR SUPPLY “B”
3036	O	EPB SHUTTLE PARK SWITCH INPUT
3037	Y	EPB PROPORTIONAL BRAKE SIGNAL
3038	Y	EPB HAND THROTTLE SWITCH
3039	O	EPB SHUTTLE PARK SWITCH OUTPUT
3045	Y	FOUR WHEEL DRIVE WARNING LAMP
3050	P	AUXILIARY FEED CONNECTOR SUPPLY
3051	P	CIGAR LIGHTER SUPPLY
3052	P	DOME LAMP TO DOOR SWITCH
3053	S	SPEAKER RIGHT HAND
3054	S	SPEAKER NEGATIVE RH
3055	S	SPEAKER LEFT HAND
3056	N	SPEAKER NEGATIVE LH
3057	P	PUDDLE LAMP RETURN
3060	P	IMPLEMENT SOCKET RELAY
3061	P	IMPLEMENT SOCKET
3062	P	IMPLEMENT SOCKET SWITCH
3070	P	’B’ PILLAR SKT SUPPLY
3073	W	MICROPHONE
3074	B	SCREEN FOR 3073

https://tractormanualz.com/

CIRC	COLOUR	DESCRIPTION
3075	O	TRAILER SOCKET (ACCESSORY FEED)
3076	O	ACCESSORY SWITCH FEED
3077	Y	RADIO +12VB
3078	O	RADIO +12V ILLUMINATION
3079	R	RADIO +12V IGNITION
3080	P	CONSOLE LAMP
3081	Y	TELEPHONE OUT
3082	O	TELEPHONE OUT 1
3083	N	TELEPHONE MUTE
3084	V	AUXILIARY INPUT COMMON RAIL
3085	W	AUXILIARY INPUT (LEFT CHANNEL)
3086	R	AUXILIARY INPUT (RIGHT CHANNEL)
3087	S	BUTTONS COMMON
3088	G	BUTTONS ‘TELEPHONE’
3089	U	BUTTONS ‘VOICE’
3090	Y	SEAT PUMP SUPPLY
3091	P	SPEAKER RR-RHS +
3092	P	SPEAKER RR-RHS -
3093	S	SPEAKER FRT-RHS +
3094	S	SPEAKER FRT-RHS -
3095	W	SPEAKER FRT-LHS +
3096	S	SPEAKER FRT-LHS -
3097	G	SPEAKER RR-LHS +
3098	G/B	SPEAKER RR-LHS -
3100	G	STEERING SENSOR +5v
3120	K	STEERING SENSOR SIGNAL
3140	LG	STEERING SENSOR GROUND
3150	W	HANDBRAKE SWITCH (N.C CONTACT) OFF SIG
3155	W	HANDBRAKE TRANS INTERLOCK
3160	O/G/Y	AUTO GUIDANCE STEERING PRESS SENSOR SIGNAL
3161	O/G/B	AUTO GUIDANCE STEERING PRESS SENSOR RETURN
3163	O/W	AUTO GUIDANCE STEERING SOLENOID VLV R FEED
3164	O/W/B	AUTO GUIDANCE STEERING SOLENOID VLV R RETURN
3165	O/R	AUTO GUIDANCE STEERING SOLENOID VLV L FEED
3166	O/R/B	AUTO GUIDANCE STEERING SOLENOID VLV L RETURN
3167	O/N	AUTO GUIDANCE STEERING PRESSURE SENSOR +5V REF
3168	O/K	AUTO GUIDANCE DUMP SOLENOID FEED (HSD)
3169	O/S	AUTO GUIDANCE DUMP SOLENOID RETURN (CURSEN)
3170	O	FAST STEER SYSTEM (FSS)- ENABLE
3171	O/R	FSS - LAMP
3172	L	FSS - STEERING PROXIMITY SENSOR POSITION
3173	R/G	FSS - HYD. VALVE HIGH SIDE DRIVER
3174	G/B	FSS - HYD. VALVE LOW SIDE DRIVER
3175	W	FSS - POSITION SENSOR PRIMARY POSITIVE
3176	B	FSS - POSITION SENSOR PRIMARY NEGATIVE
3177	U	FSS - POSITION SENSOR SECONDARY COMMON
3178	G/Y	FSS - POSITION SENSOR SECONDARY POSITIVE
3179	N	FSS - POSITION SENSOR SECONDARY NEGATIVE
3180	B	FSS - SAFETY SWITCH
3181	S/O	AUTO GUIDANCE PPS SIGNAL INPUT TO GPS
3185	N/R/Y	AUTO GUIDANCE REMOTE ENGAGE
3186	S	CERES PPS IN
3187	N/O/Y	AUTO GUIDANCE ROADING SELECT
3200	O	SUSPENSION SWITCH FEED
3210	U	SUSPENSION SWITCH RETURN
3215	U	SUSPENSION LAMP
3220	O	AXLE HEIGHT SENSOR 5V REF

https://tractormanualz.com/

CIRC	COLOUR	DESCRIPTION
3230	U	AXLE HEIGHT SENSOR POSITION
3235	O/R/S	ACCELEROMETER SIGNAL
3240	O	RAISE SOLENOID PWR
3250	O	RAISE SOLENOID RET
3260	O	LOWER SOLENOID PWR
3270	O	LOWER SOLENOID RET
3271	U	LOADER RELAY FEED
3272	O	LOADER VALVE #1 OUT
3273	O	LOADER VALVE #1 RETURN
3274	R	LOADER VALVE #2 OUT
3275	R	LOADER VALVE #2 RETURN
3276	G	LOADER VALVE
3277	U	LOADER VALVE #3 COIL
3278	U	LOADER VALVE #3 RELAY
3280	O	SUSPENSION LOCKOUT SOLENOID UPPER
3281	LN	SUSPENSION LOCKOUT SOLENOID UPPER RETURN (-)
3285	LN	SUSPENSION LOCKOUT SOLENOID LOWER
3286	LN	SUSPENSION LOCKOUT SOLENOID LOWER RETURN (-)
3290	O	SUSPENSION LOCKOUT LAMP (OR SOLENOID RET)
3295	LN/U/Y	FRONT SUSPENSION PRESSURE SWITCH SIGNAL
3300	O	SENSE LINE CONTROL SOLENOID
3310	U	RAISE LOCKOUT SOLENOID
3500	W	POWER STEERING PRESSURE SIGNAL
4001	R	TRANSMISSION OIL WARNING LAMP (TEMP)
4002	R	TRANSMISSION OIL WARNING LAMP SWITCH
4010	N	RETURN TO DIG
4011	P	ROTATING BEACON SWITCH SUPPLY
4012	P	ROTATING BEACON FEED
4013	U	TRANS CONTROL FEED
4014	U	FORWARD CLUTCH SOLENOID FEED
4015	U	REVERSE CLUTCH SOLENOID FEED
4016	U	TORQUE CONVERTOR LOCK-UP RELAY FEED
4017	U	TORQUE CONVERTOR LOCK-UP LAMP
4018	S	TORQUE CONVERTOR LOCK-UP SOLENOID FEED
4019	S	HYDRAULIC FILTER BY-PASS SWITCH FEED
4020	S	HYDRAULIC FILTER BY-PASS LAMP
4021	S	BACK-UP ALARM RELAY FEED
4022	S	BACK-UP ALARM FEED
4025	Y	4 IN 1 BUCKET FEED
4040	G	LINK LEVEL SWITCH SUPPLY
4050	W	LINK LEVEL RAISE
4051	W	LINK LEVEL LOWER
4052	W	LINK LEVEL EXTEND SIDE
4053	W	LINK LEVEL RETRACT SIDE
4054	W	LINK LEVEL SAFETY VALVE (DUMP)
4055	W	LINK LEVEL TOP LINK EXTEND SOLENOID
4056	W	LINK LEVEL TOP LINK RETRACT SOLENOID
4057	W	LINK LEVEL RIGHT LINK RAISE SOLENOID
4058	W	LINK LEVEL RIGHT LINK LOWER SOLENOID
4060	W/G/Y	HYDRAULIC SELECT FRONT
4061	W/R/Y	HYDRAULIC SELECT REAR
4100	TQ	TRANS RANGE ENABLE SWITCH SUPPLY
4101	TQ	TRANS RANGE ENABLE
4120	P/R	BEACON RELAY COIL
5000	P	EDC MEMORY POWER
5005	N	EDC KEY SWITCH FEED
5010	B/W	EDC EARTH

https://tractormanualz.com/

CIRC	COLOUR	DESCRIPTION
5011	B	EDC EARTH CASE RFI
5015	R	EDC CONTROLS BACKLIGHTING
5020	LN	EDC PROC +5V REF VOLTAGE DROP POSN/RATE
5021	K	EDC PROCESSOR REF VOLT (+5V) ROCKSHAFT
5022	K	EDC PROCESSOR REF VOLT +5V QUADRANT
5023	K	EDC PROCESSOR REF VOLT +5V HEIGHT LIMIT
5025	LN	EDC LOWER SIGNAL
5030	LN	EDC RAISE SIGNAL
5035	LN	EDC RETURN REF. VOLTAGE EARTH
5040	LN	EDC DRAFT POSITION
5045	LN	EDC DROP RATE
5050	LN	EDC QUADRANT
5055	LN	EDC CLOCK LINE TO DISPLAY
5060	LN	SERIAL DATA TO CLUSTER
5065	LN	EDC RIGHT PIN
5070	LN	EDC LEFT PIN
5075	K	EDC VOLTAGE TO PINS
5080	K	EDC ROCKSHAFT
5085	K/U	EDC VALVE UP
5087	K	EDC VALVE UP RETURN
5090	K	EDC VALVE DOWN
5095	K	EDC EXTERNAL SWITCH DOWN
5097	K	EDC VALVE DOWN RETURN
5100	K	EDC EXTERNAL SWITCH UP
5105	S	EDC IMPLEMENT STATUS SWITCH
5110	K	EDC LAMP SIGNAL
5115	K	EDC SLIP SIGNAL
5120	K	EDC HEIGHT LIMIT SIGNAL
5125	TQ	EDC RAISE SIGNAL-RAISE WORK SWITCH
5130	TQ	EDC WORK SIGNAL-RAISE WORK SWITCH
5132	TQ	EDC FLOAT
5133	TQ	EDC STOP
5135	TQ	EDC +WHEEL SPEED SIGNAL
5140	TQ	EDC -WHEEL SPEED SIGNAL
5145	TQ	EDC SLIP LIMIT POT
5150	G	EDC EXTERNAL SWITCH SUPPLY
5155	U	EDC LOWER LIMIT POT
5160	TQ	EDC HEIGHT LIMIT POT FEED
5170	LN	SERIAL DATA FROM CLUSTER
5175	R	ADIC KEY PAD DISABLE
5180	TQ	EDC SLIP INDICATOR LAMP
5190	R	HPL INTERLOCK / LIFT-O-MATIC
5200	N	EDC VALVE SUPPLY
5205	N	INTERNAL FENDER HITCH SWITCH - UP
5210	N	EDC VALVE ENABLE
5215	N	INTERNAL FENDER HITCH SWITCH - DOWN
5220	Y	EDC RAISE LAMP
5230	Y	EDC LOWER LAMP
5240	O	EDC RAISE SIGNAL-RAISE WORK SWITCH No.2
5250	O	EDC WORK SIGNAL-RAISE WORK SWITCH No.2
5260	LN	HYDRAULIC MASTER SW #1
5265	LN	HYDRAULIC MASTER SW #2
5270	N	JOYSTICK LED – FRONT
5300	K	ECU FLASH PROGRAM SIGNAL
5400	Y	CAN H
5420	G	CAN L
5500	Y	EHR CAN HIGH

https://tractormanualz.com/

CIRC	COLOUR	DESCRIPTION
5510	G	EHR CAN LOW
5515	S	EHR +12V IGN.
5520	LG	EHR 5V Ref
5521	LG	EHR Motor #1
5522	LG	EHR Motor #2
5523	LG	EHR Motor #3
5524	LG	EHR Motor #4
5531	LG	EHR NEUTRAL SWITCH VALVE #1
5532	G	EHR NEUTRAL SWITCH VALVE #2
5533	K	EHR NEUTRAL SWITCH VALVE #3
5534	LG	EHR NEUTRAL SWITCH VALVE #4
5535	LG	EHR FLOAT SWITCH VALVE#1
5536	LN	EHR FLOAT SWITCH VALVE#2
5537	N	EHR FLOAT SWITCH VALVE#3
5538	O	EHR FLOAT SWITCH VALVE#4
5541	O	EHR MAX.FLOW SWITCH VALVE #1
5542	B	EHR MAX.FLOW SWITCH VALVE #2
5543	S	EHR MAX.FLOW SWITCH VALVE #3
5544	TQ	EHR MAX.FLOW SWITCH VALVE #4
5551	O	EHR POTENTIOMETER SIGNAL VALVE#1
5552	U	EHR POTENTIOMETER SIGNAL VALVE#2
5553	W	EHR POTENTIOMETER SIGNAL VALVE#3
5554	U	EHR POTENTIOMETER SIGNAL VALVE#4
5561	O	EHR TIMED FLOW SWITCH #1
5562	O	EHR TIMED FLOW SWITCH #2
5563	O	EHR TIMED FLOW SWITCH #3
5564	P	EHR TIMED FLOW SWITCH #4
5570	P	FENDER 3RD EHR SWITCH (RES)
5571	P	FENDER 3RD EHR SWITCH (RES)
5572	P	FENDER 3RD EHR SWITCH (RES)
5574	P	FENDER 3RD EHR SWITCH – UP
5576	P	FENDER 3RD EHR SWITCH – DOWN
5580	TQ	JOYSTICK REAR LAMP (MC)
5585	TQ	JOYSTICK FRONT LAMP (MC)
5591	P	EHR WARNING LAMP#1
5592	P	EHR WARNING LAMP#2
5593	P	EHR WARNING LAMP#3
5594	P	EHR WARNING LAMP#4
5595	S	EHR MASTER STOP SWITCH
5596	S	EHR MASTER STOP LAMP
5597	S	EHR MASTER ENABLE
5600	R	HTS LIVE SIGNAL
5610	R	HTS PROGRAM
5620	R	HTS ON/OFF SWITCH
5625	R	LIFT-O-MATIC SWITCH
5630	R/U/Y	HTS MANUAL SWITCH
5640	R/S/Y	HTS AUTO SWITCH
5700	W	EHR J-STICK X+
5710	W	EHR J-STICK X ACTIVE SWITCH
5720	W	EHR J-STICK X FULL FLOW SWITCH
5730	W	EHR J-STICK X FLOAT SWITCH
5740	W	EHR J-STICK Y+
5750	W	EHR J-STICK Y ACTIVE SWITCH
5760	W	EHR J-STICK Y FULL FLOW SWITCH
5770	W	EHR J-STICK Y FLOAT SWITCH
5820	S	EDC ROCKSHAFT POT
5830	S/R/Y	HIGH FLOW PUMP LINK

https://tractormanualz.com/

CIRC	COLOUR	DESCRIPTION
5835	S/U/Y	HYDRAULIC MASTER SWITCH HIGH FLOW PUMP LINK
5840	W	FRONT HITCH DETECT INPUT
5900	G	ISO BUS CAN SIGNAL LOW
5910	Y	ISO BUS CAN SIGNAL HIGH
5915	B	ISO BUS CAN SUPPLY GROUND
5920	R	ISO BUS CAN SUPPLY POSITIVE
5930	LN	ROTARY ENCODER SUPPLY
5935	O	ROTARY ENCODER SIGNAL - "HOME"
5940	O	ROTARY ENCODER SIGNAL - "ESC"
5945	TQ	ROTARY ENCODER SIGNAL - "P1"
5950	TQ	ROTARY ENCODER SIGNAL - "P2"
5955	B/LN	RS232 INPUT T.E.C.U.
5960	W/LN	RS232 OUTPUT T.E.C.U.
5962	R	USB + 5V REF.
5964	W	USB DATA -
5966	G	USB DATA +
5968	B	USB GROUND
5970	O	ISO BUS ECU SIGNAL
5975	O	ISO RELAY 2 POWER OUT
5980	U	ISO BUS IMPLEMENT SIGNAL
5985	U	ISO RELAY 1 POWER OUT
5990	O	ROTARY ENCODER SIGNAL - "ENTER"
6000	K	ENGINE SPEED SIGNAL
6001	B	ENGINE ECU RESISTOR #1
6002	W	ENGINE ECU RESISTOR #2
6003	R	ENGINE ECU RESISTOR #3
6004	G	ENGINE ECU RESISTOR #4
6057	TQ	ENGINE STARTER RELAY GROUND
6010	Y	THROTTLE POSITION SWITCH
6100	U	ENGINE COLD ADVANCE CONTROL
6200	R	MANIFOLD (GRID) HEATER SUPPLY
6300	N	FAN SPEED
6305	N	REVERSIBLE FAN OPTION - MOTOR FEED
6310	N	FAN SOLENOID
6315	N	REVERSIBLE FAN OPTION - RELAY CONTROL
6320	N	FAN 5V REF.
6325	N	REVERSIBLE FAN OPTION - RELAY FEED
6327	R	REVERSIBLE FAN RELAY POWER OUT
6330	N	VISTRONIC FAN INPUT
6355	N	+5V LOW POWER REFERENCE
6400	LN	ECU BATTERY SUPPLY
6401	G	ECU TO THROTTLE POT.+5V
6402	G	ECU TO THROTTLE POT. VAR
6403	G	ECU TO THROTTLE POT.-
6404	G	THROTTLE POT. TO LOW IDLE SWITCH
6405	G	ECU TO THROTTLE POT. SWITCH
6407	O/Y/B	ENGINE SHUTDOWN SIGNAL (EDC16)
6408	G	FUSED B+ TO ECU (1)
6409	G	FUSED B+ TO ECU (2)
6410	G	FUSED B+ TO ECU (3)
6411	G	FUSED B+ TO ECU (4)
6413	O	ENGINE SHUTDOWN RELAY SUPPLY
6414	G	FUSED IGN.+ TO ECU
6415	G	ECU TO J1939 INTERFACE CAN#1 CONN.(HI)
6416	G	ECU TO J1939 INTERFACE CAN#1 CONN.(LO)
6417	N/A	SCREEN BRAID FOR 6415 & 6416

https://tractormanualz.com/

CIRC	COLOUR	DESCRIPTION
6418	K	ECU TO J1941(ISO) INTERFACE #2 CONNECTOR ISO K
6419	K	ECU TO J1941(ISO) INTERFACE #2 CONNECTOR ISO L
6420	K	ECU SINK DRIVER#6 TO DIAGNOSTIC LAMP
6421	K	ECU SINK DRIVER#6 TO DIAGNOSTIC LAMP
6422	K	ENGINE MOUNTED B- TO ECU (1)
6423	K	ENGINE MOUNTED B- TO ECU (2)
6424	K	ENGINE MOUNTED B- TO ECU (3)
6425	K	ENGINE MOUNTED B- TO ECU (4)
6427	K	ECU TO MULTIPLE STATE SWITCH (PASS.INPUT#06)
6428	K	ECU TO MULTIPLE STATE SWITCH (PASS.INPUT#06)
6431	K	ECU TO DIAGNOSTIC REQUEST SWITCH (DIG 15)
6432	K	ECU SWITCHED BATTERY OUTPUT TO DIAGNOSTIC REQUEST SWITCH
6440	S	HAND THROTTLE POSITION 1
6450	S	HAND THROTTLE POSITION 2
6460	S	HAND THROTTLE SWITCH (NOT IDLE)
6500	N	CONSTANT ERPM ON/OFF
6510	N	CONSTANT ERPM SET 1
6520	N	CONSTANT ERPM SET 2
6530	N	CONSTANT ERPM INCREASE
6540	N	CONSTANT ERPM DECREASE
6550	N	CONSTANT ERPM SET LAMP
6560	U	ECU TO FUEL FILTER HEATER
6570	G	ECU TO FUEL FILTER HEATER RETURN
6580	K	ECU TO GRID HEATER RELAY#1
6585	O	ECU TO GRID HEATER RELAY#2
6586	P	ECU TO GRID HEATER RELAY RETURN
6590	LG	ECU DIGITAL GROUND
6600	LN	ECU BATTERY SUPPLY
6610	N	ECU IGNITION SUPPLY
6620	O	ECU COOLANT TEMP. SIGNAL
6630	O	ECU COOLANT TEMP. GROUND
6640	O	ECU AC PRESSURE NOT HIGH SWITCH
6650	O	ECU BOOST GROUND
6660	O	ECU BOOST TEMP.
6670	O	ECU 5V BOOST
6680	O	ECU BOOST PRESSURE
6690	O	ECU SOLENOID VALVE SHUT OFF
6700	O	ECU CRANK SHAFT OUTPUT SHAFT
6710	O	ECU ENGINE SPEED
7000	U	TRANS CONTROL SUPPLY
7001	U	TRANS DISPLAY ILLUMINATION
7002	U	TRANS MAIN CLUTCH SOL (C3/C4)
7003	U	TRANS DUMP SOL
7004	U	TRANS FRONT CLUTCH SOL (C1/C2)
7005	U	TRANS CREEPER GR SOL
7007	R	TRANS DUAL POWER PRESSURE SWITCH HIGH
7008	R	TRANS DUAL POWER PRESSURE SWITCH LOW
7009	W	TRANS RANGE DISABLE SWITCH
7010	U	TRANS RANGE INDICATOR SWITCH (GR 1-4)
7020	U	TRANS RANGE INDICATOR SWITCH (GR 5-8)
7025	R/TQ/Y	TRANS DISPLAY ENABLE
7030	U	TRANS RANGE INDICATOR SWITCH COMMON
7035	N	TRANS DUMP SOLENOID FEED
7040	N	TRANS CREEPER SWITCH
7050	R	TRANS RELAY SUPPLY - RUN

https://tractormanualz.com/

CIRC	COLOUR	DESCRIPTION
7060	R	TRANS RELAY SUPPLY - START
7068	U	TRANS CVT POWER SUPPLY (CVT)
7070	R	TRANS FEED (IGN +)
7071	N	FEED HYD FILTER RESTRICTION IND LAMP
7080	LG	DIFF-LOCK SOLENOID FEED
7090	LG	DIFF-LOCK SWITCH TO BRAKE SWITCH
7100	N	DIFF-LOCK RELAY TO BRAKE SWITCH
7110	R	PTO INHIBITOR SWITCH TO TRANS
7120	Y	DIFF-LOCK WNG LP (MANUAL)
7125	LG	DIFF-LOCK WNG LP (AUTO)
7126	LG	DIFF LOCK PRESSURE SWITCH
7130	N	HYD FILTER WNG LP
7135	N	HYD FILTER PRESSURE SWITCH
7140	O	DIFF-LOCK OFF SOLENOID
7150	S	LOW OIL PRESSURE WRN FEED
7155	U	VANE PUMP PRESSURE SENSOR SIGNAL
7160	R	HYD LOW CHARGE WARNING
7170	W	DIFF LOCK SWITCH (AUTO ON)
7175	Y	DIFF LOCK SWITCH (MANUAL ON)
7180	U	CREEPER SWITCH MOM SIGNAL
7190	K	TRANS SOLENOID VALVE SUPPLY
7195	K	TRANS SOLENOID VALVE RETURN
7196	Y	TRANS FR/REV LOW SIDE RETURN (CVT)
7197	Y	TRANS RANGE LOW SIDE RETURN (CVT)
7198	U	TRANS HYDROSTATIC LOW SIDE RETURN (CVT)
7200	S	TRANSMISSION SHIFT DOWN
7210	S	TRANSMISSION SHIFT UP
7220	S	TRANSMISSION HIGH RANGE
7225	W	TRANS HI RANGE SOL - RET
7230	S	TRANSMISSION LOW RANGE
7235	Y	TRANS LOW RANGE SOL - RET
7240	S	TRANSMISSION DISPLAY SWITCH
7245	LN	DEADMAN
7250	S	TRANSMISSION FORWARD SIGNAL
7260	S	TRANSMISSION REVERSE SIGNAL
7265	K	TRANS NEUTRAL SWITCH TO PROCESSOR (GR.SW 1)
7267	LG	TRANS NEUTRAL SWITCH 2 TO PROCESSOR
7270	R	TCM SERIAL DATA IN-DISPLAY DATA OUT
7275	W	TCM SERIAL DATA OUT-DISPLAY DATA IN
7280	W	LIMP HOME SWITCH 18x18 TRANS.
7290	W	DIRECTIONAL INTERRUPT RELAY TO SOLENOID
7295	W	DRIVE DISABLE SIGNAL
7300	W	SOLENOID 1 18x9 TRANSMISSION
7301	Y	SOLENOID 1 18x9 RETURN
7320	W	SOLENOID 2 18x9 TRANSMISSION
7321	P	SOLENOID 2 18x9 RETURN
7330	W	SOLENOID 3 18x9 TRANSMISSION
7331	Y	SOLENOID 3 18x9 RETURN
7340	W	SOLENOID F1 18x9 TRANSMISSION
7341	Y	SOLENOID F1 18x9 RETURN
7350	W	SOLENOID F2 18x9 TRANSMISSION
7351	S	SOLENOID F2 18x9 RETURN
7355	S	SOLENOID R 18x9 TRANSMISSION
7356	U	SOLENOID R 18x9 RETURN
7360	W	SOLENOID A 18x9 TRANSMISSION
7361	P	SOLENOID A 18x9 RETURN

https://tractormanualz.com/

CIRC	COLOUR	DESCRIPTION
7370	Y	SOLENOID B 18x9 TRANSMISSION
7371	P	SOLENOID B 18x9 RETURN
7380	Y	SOLENOID C 18x9 TRANSMISSION
7381	P	SOLENOID C 18x9 RETURN
7390	Y	SOLENOID PMW (F1) 18x9 TRANSMISSION
7391	P	SOLENOID PWM (F1) 18x9 RETURN
7392	O	SOLENOID PWM (F2) 18x9 TRANSMISSION
7393	O	SOLENOID PWM (F2) 18x9 RETURN
7395	P	SOLENOID CREEP 18x9 TRANSMISSION
7396	P	SOLENOID CREEP 18x9 RETURN
7400	Y	TRANS RPM SPEED SENSOR TO TCM INPUT
7401	P	TRANS RPM SPEED SENSOR
7402	Y	TRANS WHLSP FORWARD (CVT)
7403	Y	TRANS WHLSP REVERSE (CVT)
7404	Y	TRANS HYDROSTAT FORWARD (CVT)
7405	Y	TRANS HYDROSTAT REVERSE (CVT)
7406	LG	TRANS BI-DI SPEED SENSOR RET (CVT)
7407	K	HYDROSTAT 1 SOLENOID +
7408	L	HYDROSTAT 1 SOLENOID GND
7410	Y	TRANS RPM SPEED SENSOR TO TCM OUTPUT
7411	Y/K/B	TRANS HYDROSTAT INPUT SPEED SENSOR (CVT)
7420	Y	TCM TO CLUTCH POSITION SWITCH
7425	Y	DRIVE SIGNAL
7430	Y	CLUTCH POSITION SIGNAL
7431	TQ	CLUTCH 'A' SUPPLY
7440	Y	TCM TO TRACTOR EIC-AXLE OUTPUT
7450	W	TRANS CREEPER INTERLOCK SUPPLY
7460	W	TRANS CREEPER CLUTCH ENGAGED
7470	S	TRANS CREEPER CLUTCH DISENGAGED
7475	R	TRANS AUTO OFF
7476	R	TRANS AUTO ON
7480	G	TRANS AUTO FUNCTION 1
7482	G	TRANS AUTO ON/INCREASE
7485	K	TRANS AUTO FUNCTION LAMP 1
7490	G	TRANS AUTO FUNCTION 2
7492	G	TRANS AUTO OFF/DECREASE
7495	K	TRANS AUTO FUNCTION LAMP 2
7500	G	TRANS OIL TEMP. SENSOR
7520	G	TRANS SENSOR SUPPLY 8v
7525	G	TRANS SENSOR SUPPLY 5v
7560	G	TRANS WARNING LAMP
7570	B/W	SIGNAL GROUND
7579	U	PARKLOCK SWITCH
7580	U	CREEPER SOLENOID MONITOR
7581	O	CREEPER POSITION SIGNAL
7582	U	CREEPER RAIL SWITCH NOT
7583	U	PARKLOCK SWITCH #2
7584	U	PARKLOCK SENSOR SWITCH SIGNAL
7585	U	PARKLOCK SOLENOID #2
7586	U/G/Y	PARKLOCK SOLENOID
7587	U	PARKLOCK OVERRIDE SWITCH
7588	U	PARKLOCK POSITION SIGNAL
7589	U	BRAKE PRESSURE SIGNAL
7590	O	TRANS CREEPER GEAR STATUS LAMP
7600	N	TRANS FEATHERING SOLENOID
7620	N	TRANS FEATHERING SOL. MONITOR

https://tractormanualz.com/

CIRC	COLOUR	DESCRIPTION
7630	N	TRANS MAIN CLUTCH PRESSURE SWITCH
7640	LN	DIAGNOSTIC PLUG RS232 IN
7650	W	DIAGNOSTIC PLUG RS232 OUT
7655	Y/LN	RS232 GROUND
7660	R	TRANS CLUTCH DISCONNECT
7670	R	TRANS FRONT SYNCHRO POSITION
7700	LN	TRANS SHUTTLE DUMP SWITCH
7710	LN	TRANS OIL TEMPERATURE SWITCH
7730	TN	NOT IN PARKLOCK
7735	LN	TRANS MID SPEED SIGNAL +
7740	LN	TRANS MID SPEED SIGNAL -
7750	R	TCM TO DOG 30/40 KPH SELECT
7755	P/G/S	DOG ENABLE
7760	W	TORQUE SENSOR
7770	U	TRANS FORWARD PRESSURE SWITCH
7775	K	B CLUTCH PRESSURE SIGNAL
7780	U	TRANS FORWARD PRESSURE SWITCH
7785	O	A CLUTCH PRESSURE SIGNAL
7790	TQ	TRANS RANGE INPUT DIGITAL FEEDBACK (CVT)
7800	TQ	TRANS FR / REV INPUT DIGITAL FEEDBACK (CVT)
7810	K	TRANS PWM SOLENOID C1
7815	K	TRANS PWM SOLENOID C1 RETURN
7820	K	TRANS PWM SOLENOID C2
7825	K	TRANS PWM SOLENOID C2 RETURN
7830	K	TRANS PWM SOLENOID C3
7835	K	TRANS PWM SOLENOID C3 RETURN
7840	K	TRANS PWM SOLENOID C4
7845	K	TRANS PWM SOLENOID C4 RETURN
7846	TQ	TRANS BRAKE SOLENOID (CVT)
7847	TQ	TRANS HYDROSTATIC - POSITIVE SOLENOID (CVT)
7848	TQ	TRANS HYDROSTATIC - NEGATIVE SOLENOID (CVT)
7850	G	TRANS DIAGNOSTIC PROGRAM VOLTAGE
7855	G	TRANS DIAGNOSTIC EA
7860	G	TRANS DIAGNOSTIC RCV
7865	G	TRANS DIAGNOSTIC XMT
7870	G	TRANS DIAGNOSTIC RTS
7875	K	TRANS DIAGNOSTIC CTS
7880	B/W	T C M SIGNAL GROUND
7890	TQ	TRANS L-LINE DIAGNOSTIC (CVT)
7900	TQ	CLUTCH 'A' SIGNAL
7910	TQ	CLUTCH 'B' SIGNAL
7915	P	TCM CLUTCH B RETURN
7920	TQ	CLUTCH 'C' SIGNAL
7925	P	TCM CLUTCH C RETURN
7930	TQ	CLUTCH 'D' SIGNAL
7935	P	TCM CLUTCH D RETURN
7940	TQ	CLUTCH 'E' SIGNAL
7945	P	TCM CLUTCH E RETURN
7950	TQ	CLUTCH SUPPLY
7960	P	TRANS SLOW/FAST
7965	P	HI/LO SYNCHRO SIGNAL
7970	P	TRANS MED/REV
7980	K	TRANS MED RANGE
7982	W	TRANS MED RANGE RET
7985	G	TRANS REVERSE RANGE
7990	K	TRANS BRAKE
7995	K	BRAKE FLUID LEVEL

https://tractormanualz.com/

CIRC	COLOUR	DESCRIPTION
7996	R	BRAKE PEDALS UNLATCHED SIGNAL
8000	N	TRAILER BRAKE SOLENOID
8010	LN	TRAILER BRAKE PRESSURE
8020	LN	TRAILER BRAKE PRESSURE
8030	LG	TRANS FWD SOLENOID
8035	P	TRANS FWD SOL RET
8040	LG	TRANS REV SOLENOID
8045	P	TRANS REV SOL RET
8050	R	TRANS REV PRESSURE
8060	U	TRAILER BRAKE SUPPLY
8070	P/W/S	TRAILER PARK BRAKE SOLENOID
9000	LN	DIVERTER VALVE
9010	LN	DIVERTER VALVE SUPPLY
9020	LN	HYDRAULIC REMOTE VALVE SOL
9025	LN	HYDRAULIC REMOTE VALVE SWITCH
9027	W	CAL/ SEL INPUT ADIC
9028	W	ADIC MEMORY B+
9031	P	ADIC MEMORY B+
9032	Y	IGN.+ TO POWER SKT.
9033	LN	50KPH SOLENOID+
9034	LN	50KPH SOLENOID-
9035	LN	50KPH DUMP SOLENOID
9036	LN	50KPH DUMP SOLENOID RETURN

https://tractormanualz.com/

https://tractormanualz.com/

Wiring harness - Electrical schematic frame 01 Power Distribution (Maxi Fuses 1 - 6)

Compo-nent	Connector	Description
G001	**X608**, **X665**, **X815**, XBP30, **X810**	**12 V** Battery
K013	**X037**	Engine Shutdown
MF1	**X060**, **X070**	Supply to F009, F013, F018, F021, F045, F050
MF2	**X070**	Supply to F006, F007, F008, F036, F037, F038
MF3	**X070**	Supply to V019, F030, K005, K013
MF4	**X070**	Supply to F027, K015
MF5	**X070**	Supply to F026, F031, F051
MF6	**X070**	Supply to F001, F002, F003, F004, F005, F044
PF1	**X463**, **X465**	Power Fuse, Main power supply B+ (**250 A**)
PF2	**X462**, **X464**	Power Fuse, Power Supply CCU
PF3	**X664**	Power Fuse, Power Supply Memory
PF4	**X606**	Power Fuse, ISO Bus Rear
PF5	**X607**	Power Fuse, ISO Bus Rear
PF6	**X813**	Power Fuse, ISO Bus Front
PF7	**X814**	Power Fuse, ISO Bus Front
Z002	**X070**	Maxi Fuseholder
Additional Connectors: **X021**, **X023**, **X025**		

Wire Colour Codes

B	Black	S	Slate	G	Green	P	Purple
N	Brown	R	Red	LG	Light Green	K	Pink
LN	Light Brown	O	Orange	U	Blue	W	White
L	Lilac	Y	Yellow	TQ	Turquoise		

https://tractormanualz.com/

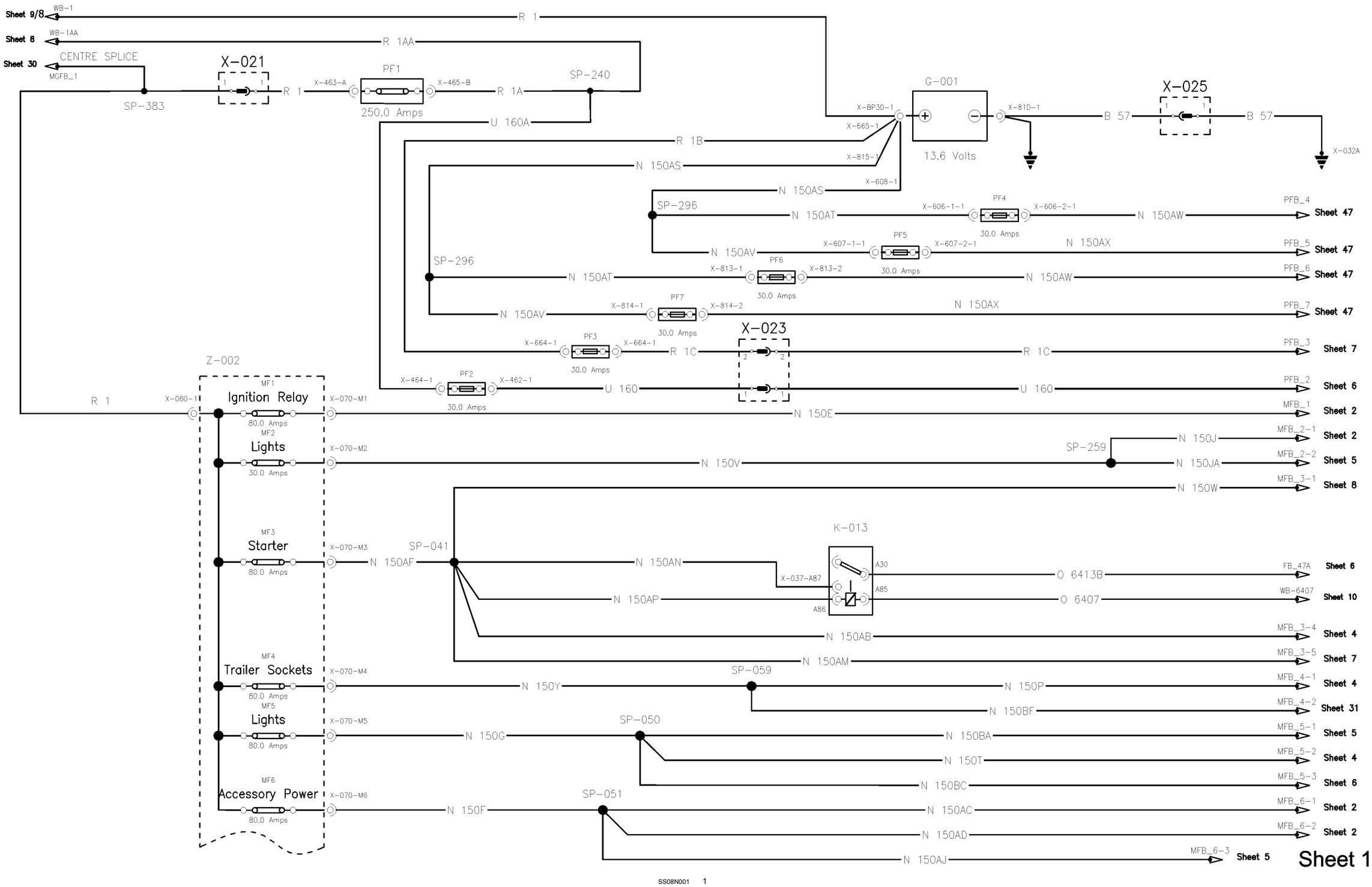

https://tractormanualz.com/

Wiring harness - Electrical schematic frame 02 Power Distribution (Fuses 1 - 14)

Component	Connector	Description
F001	**X073**	Interior and step lighting and relay mirror heating
F002	**X073**	Cigar lighter and power socket, cab (potential 30)
F003	**X073**	Coupling of the A/C compressor
F004	**X073**	Screw terminal red (potential 30)
F005	**X073**	Blower Motor
F006	**X073**	Station memory and work lamp control unit
F007	**X073**	Switch - Main headlights and hazard light switch
F008	**X073**	Starter Switch
F009	**X073**	Front Loader Power
F010	**X073**	Rear Power Socket (Potential 15)
F011	**X073**	Front Windscreen Wiper
F012	**X073**	Rear Windscreen Wiper / Switch, Windscreen Washing System, Front / Rear
F013	**X073**	Relay, Brake Lights
F014	**X073**	Headlight Switch and Flasher
K003	**X034**	Ignition Relay
Z002	**X073**	Fusemodul
Additional Connectors: -		

Wire Colour Codes

B	Black	S	Slate	G	Green	P	Purple
N	Brown	R	Red	LG	Light Green	K	Pink
LN	Light Brown	O	Orange	U	Blue	W	White
L	Lilac	Y	Yellow	TQ	Turquoise		

https://tractormanualz.com/

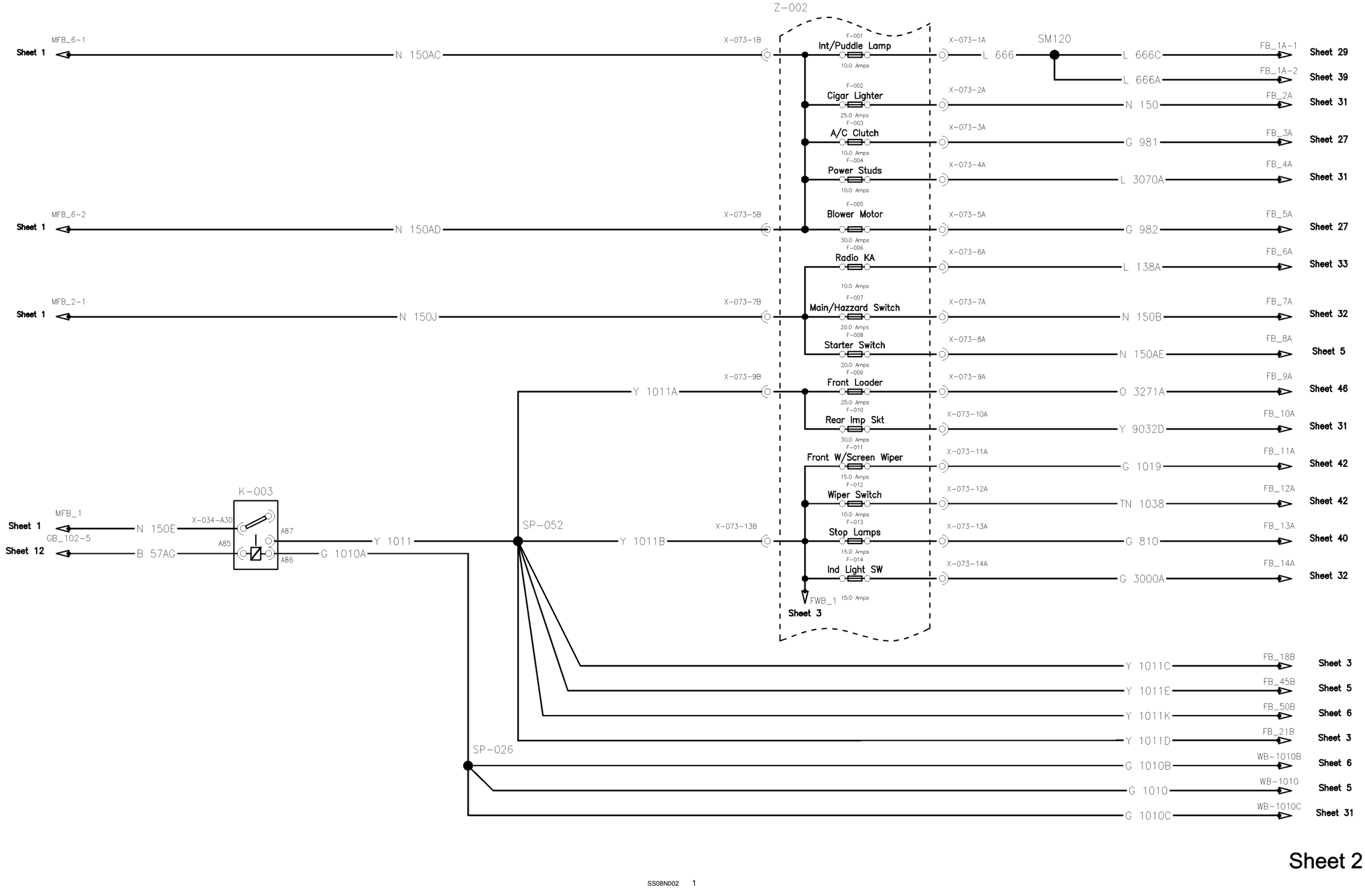

Sheet 2

SS08N002 1

https://tractormanualz.com/

Wiring harness - Electrical schematic frame 03 Power Distribution (Fuses 15 - 21)

Component	Connector	Description
F015	**X073**	Brake light switch and pedal lock
F016	**X073**	Trailer brake
F017	**X073**	Power socket, cab (potential 15)
F018	**X073**	Air blower motor relay and driver’s seat / Armrest adjust
F019	**X073**	Heated mirrors
F020	**X073**	Radar sensor, normal signal socket / keypad
F021	**X072**	Water sensor for the fuel filter, Brake fluid level switch
Z002	**X073**	Fusemodul
Z002	**X072**	Fusemodul
Additional Connectors: **X024**		

Wire Colour Codes

B	Black	S	Slate	G	Green	P	Purple
N	Brown	R	Red	LG	Light Green	K	Pink
LN	Light Brown	O	Orange	U	Blue	W	White
L	Lilac	Y	Yellow	TQ	Turquoise		

https://tractormanualz.com/

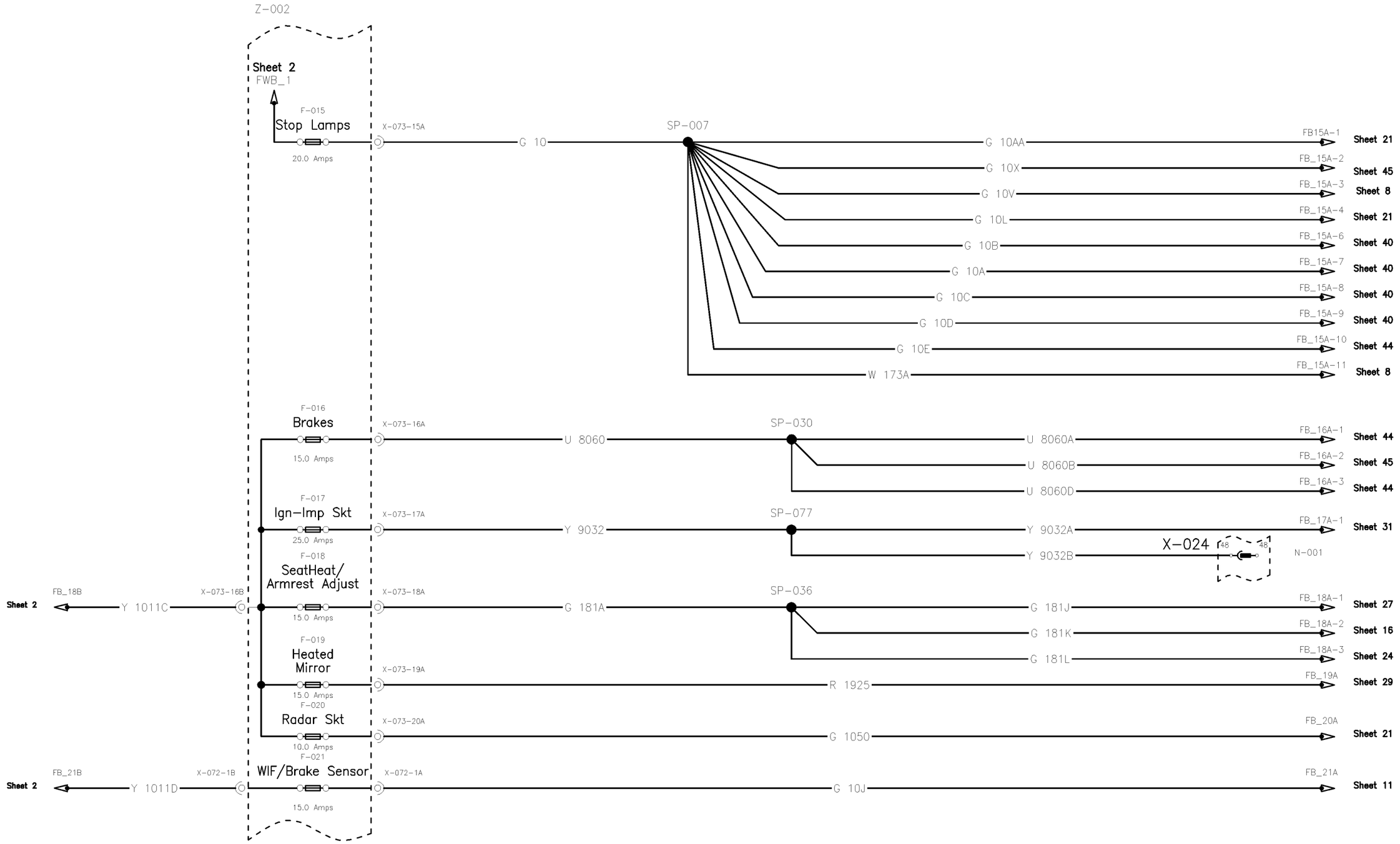

Sheet 3

SS08N003 1

https://tractormanualz.com/

Wiring harness - Electrical schematic frame 04 Power Distribution (Fuses 22 - 30)

Component	Connector	Description
F022	**X072**	Side marker lights, right
F023	**X072**	Side marker lights, left / licence plate lights
F024	**X072**	Illumination - Lighting / cigar lighter - ICU - VT - heated mirror switch - EHR-lock switch
F025	**X072**	Dipped beam headlights relay, get you home
F026	**X072**	Main beam headlights
F027	**X072**	Front work lamp (bonnet)
F028	**X072**	Work lamp control unit / Roof rear worklamps
F029	**X072**	Work lamp control unit / Roof front worklamps and grabrail
F030	**X072**	Work lamp (C-pillar)
Z002	**X072**	Fusemodul
Additional Connectors: -		

Wire Colour Codes

B	Black	S	Slate	G	Green	P	Purple
N	Brown	R	Red	LG	Light Green	K	Pink
LN	Light Brown	O	Orange	U	Blue	W	White
L	Lilac	Y	Yellow	TQ	Turquoise		

https://tractormanualz.com/

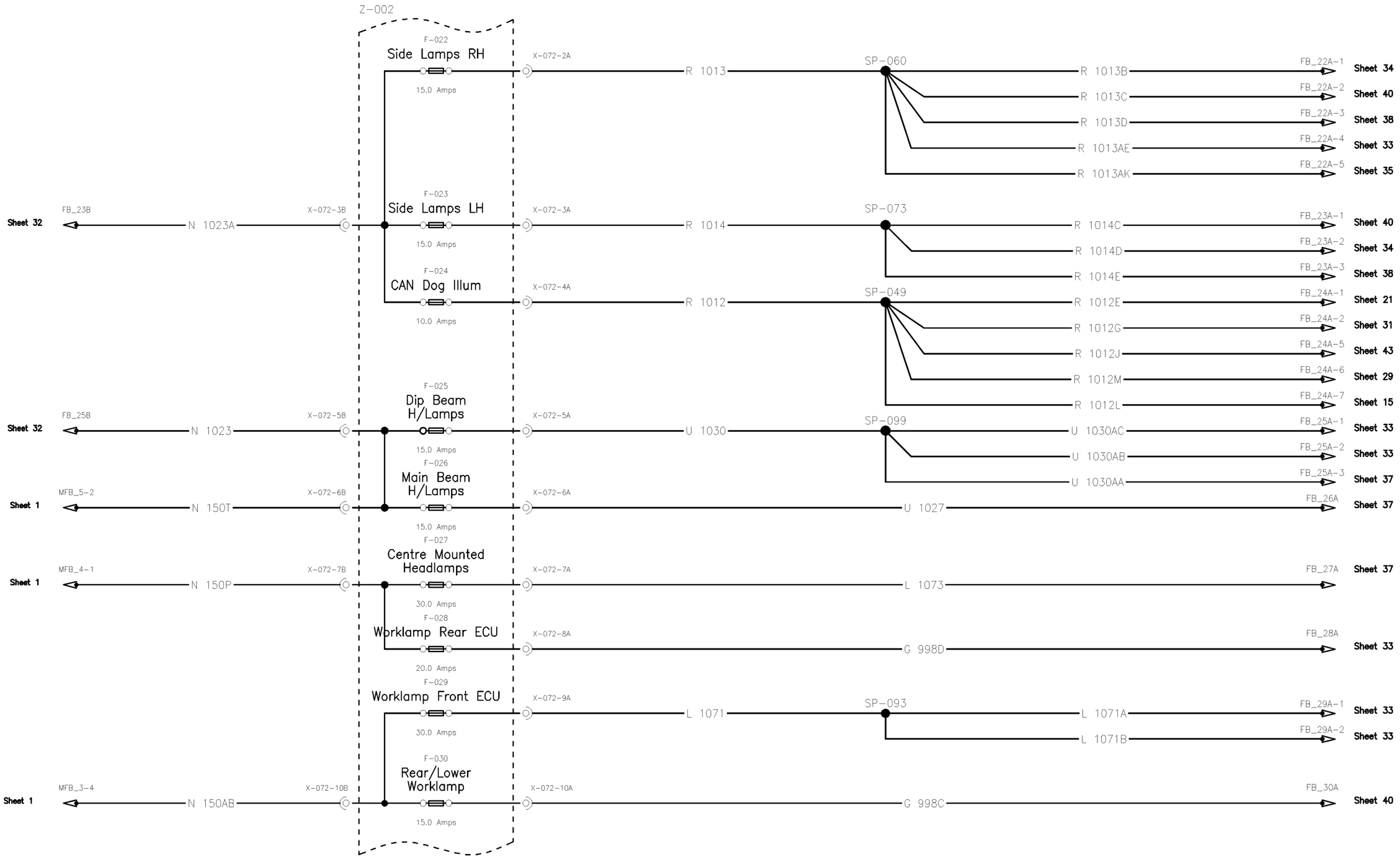

Sheet 4

SS08N004 1

https://tractormanualz.com/

Wiring harness - Electrical schematic frame 05 Power Distribution (Fuses 31 - 45)

Component	Connector	Description
F031	**X072**	Rotating beacon (via work lamp control unit)
F032	**X072**	Flasher unit
F033	**X072**	Diagnostics plug 1/2
F034	**X072**	ICU 3 and hand brake switch
F035	**X072**	Potential 30 for electronics
F036	**X072**	4 Work lamps front roof relay
F037	**X072**	4 Work lamps rear roof relay
F038	**X072**	6 Work lamps front roof relay
F040	**X072**	Radio memory
F043	**X071**	Engine electronics (potential 15)
F044	**X071**	Front-mounted equipment socket (B+)
F045	**X071**	Power supply - 8 A socket (potential 15) C-pillar left
S007	**X003**	Starter Switch
Z002	**X072**	Fusemodul
Z002	**X071**	Fusemodul
Additional Connectors: **X024**		

Wire Colour Codes

B	Black	S	Slate	G	Green	P	Purple
N	Brown	R	Red	LG	Light Green	K	Pink
LN	Light Brown	O	Orange	U	Blue	W	White
L	Lilac	Y	Yellow	TQ	Turquoise		

https://tractormanualz.com/

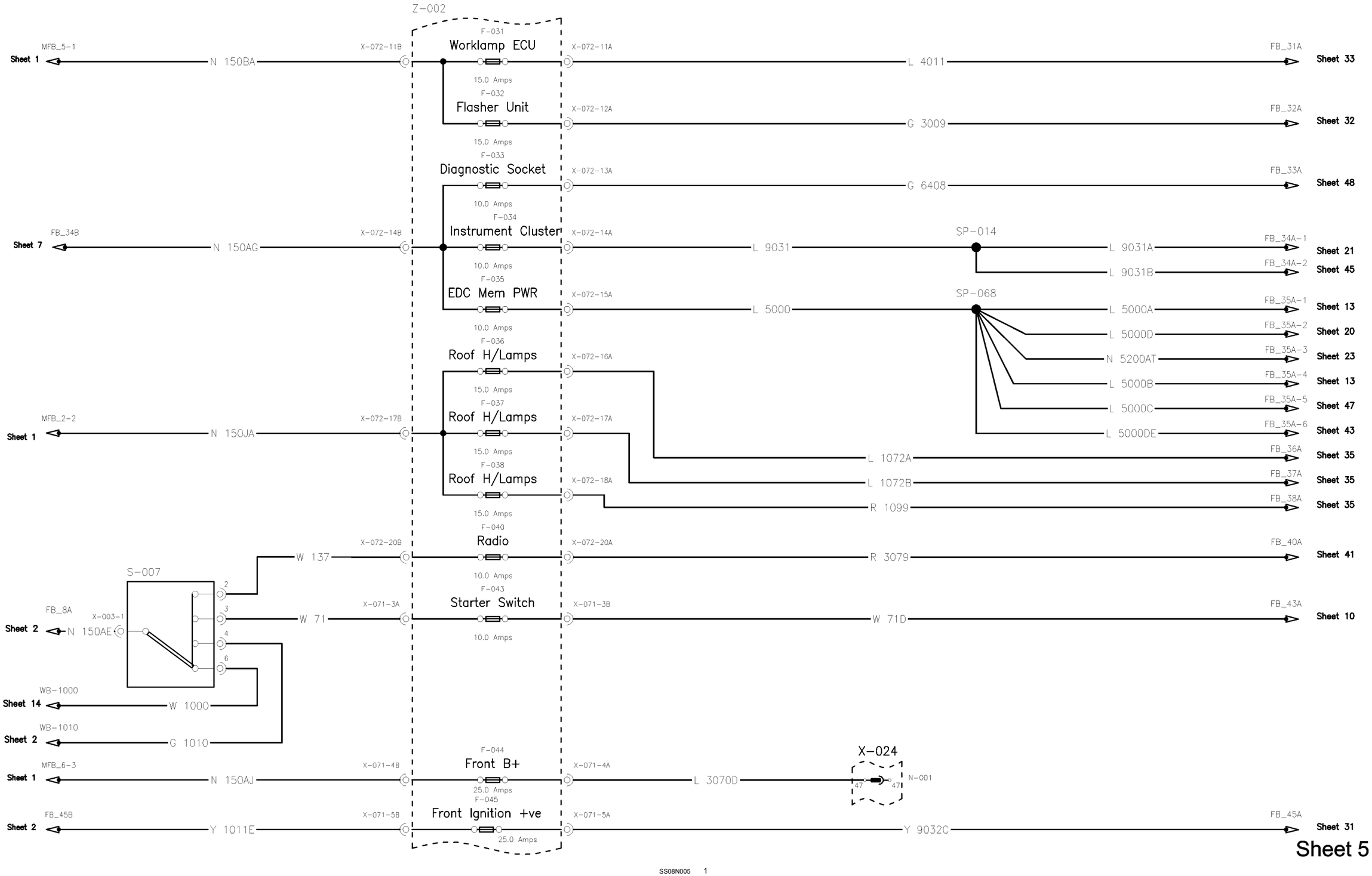

https://tractormanualz.com/

Wiring harness - Electrical schematic frame 06 Power Distribution (Fuses 46 - 54)

Component	Connector	Description
F046	**X071**	Engine controller B+ supply
F047	**X071**	Engine controller B+ supply
F049	**X071**	Viscotronic fan, relay heater grid, relay fuel filter heater, exhaust brake
F050	**X071**	Reversible fan
F051	**X071**	Electronic park brake
F052	**X071**	ICU 3 supply
F053	**X071**	Transmission control supply (potential 15)
F054	**X071**	PTO rear
K017	**X074**	Power Supply ECU
Z002	**X071**	Fusemodul
Additional Connectors: **X026**		

Wire Colour Codes

B	Black	S	Slate	G	Green	P	Purple
N	Brown	R	Red	LG	Light Green	K	Pink
LN	Light Brown	O	Orange	U	Blue	W	White
L	Lilac	Y	Yellow	TQ	Turquoise		

https://tractormanualz.com/

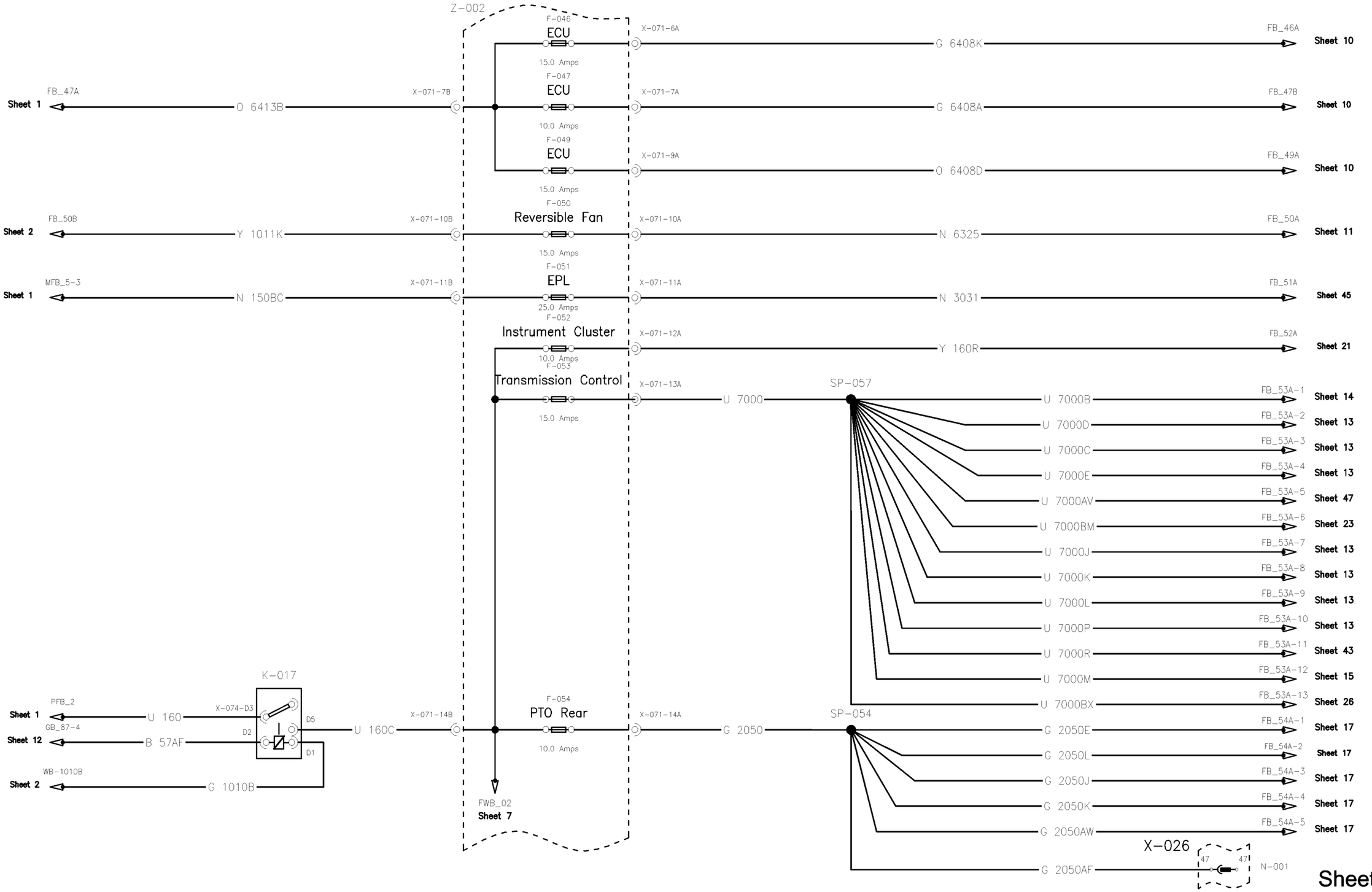

SS08N006 1

https://tractormanualz.com/

Wiring harness - Electrical schematic frame 07 Power Distribution (Fuses 55 - 60)

Component	Connector	Description
F055	**X071**	Supply Ignition Fast Steer / ARU 1 / A/C pressure switch / ACU-CN1a / CCM-CN1a
F056	**X071**	PTO front
F057	**X071**	Supply Ignition / ACU auxiliary unit CN1a front hitch
F060	**X071**	Time relay battery isolator - battery isolator control switch
H083	**X455**	Reverse Alarm
V019	**X076**	Less El. Battery Isolator Diode
V020	**X076**	With El. Battery Isolator Doide
Z002	**X071**	Fusemodul
Z006	**X076**	Diode Block
Additional Connectors: **X110**, **X127**, **X620**		

Wire Colour Codes

B	Black	S	Slate	G	Green	P	Purple
N	Brown	R	Red	LG	Light Green	K	Pink
LN	Light Brown	O	Orange	U	Blue	W	White
L	Lilac	Y	Yellow	TQ	Turquoise		

https://tractormanualz.com/

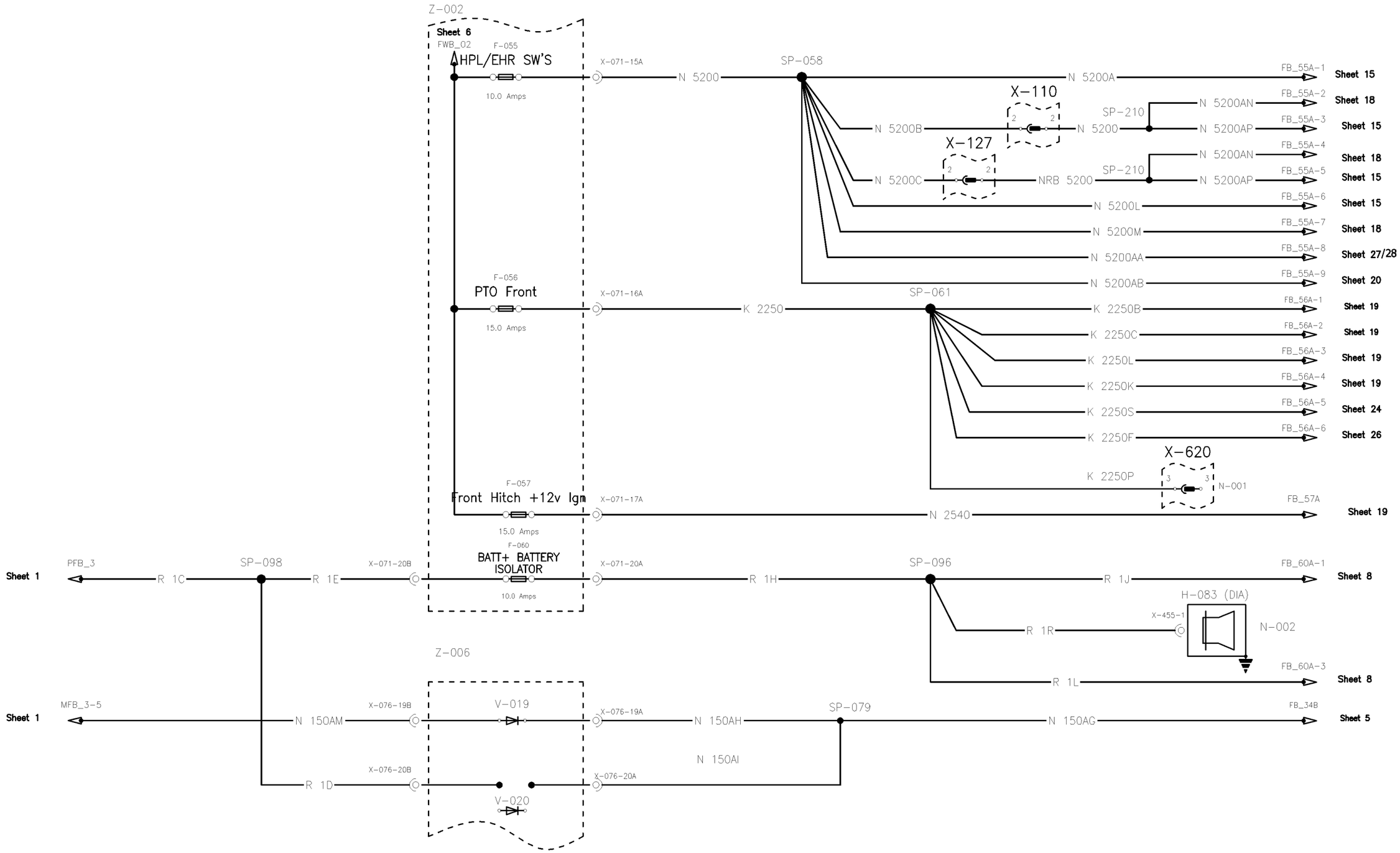

Sheet 7

SS08N007 1

https://tractormanualz.com/

Wiring harness - Electrical schematic frame 08 Start/Charging (Start & Charging W/Isolator)

Component	Connector	Description
G002	**X236**, **X237**	Alternator
K005	**X035**	Starter Motor On
K018	**X074**	EL.Battery Isolator
K021	**X032**	Timer Relay Battery Isolator
M003	**X231**, **X232**	Starter Motor
PF8	**X823**	Mega Fuse, Grid & Fuel Heater (**125 A**)
Q001	**X466**, **X663**	Battery Isolator
S006	**X482**	Battery Isolator Control Switch
V007	**X076**	El. Battery Isolator Diode
Z006	**X076**	Diode Block
Additional Connectors: **X024**, **X026**, **X238**		

Wire Colour Codes

B	Black	S	Slate	G	Green	P	Purple
N	Brown	R	Red	LG	Light Green	K	Pink
LN	Light Brown	O	Orange	U	Blue	W	White
L	Lilac	Y	Yellow	TQ	Turquoise		

https://tractormanualz.com/

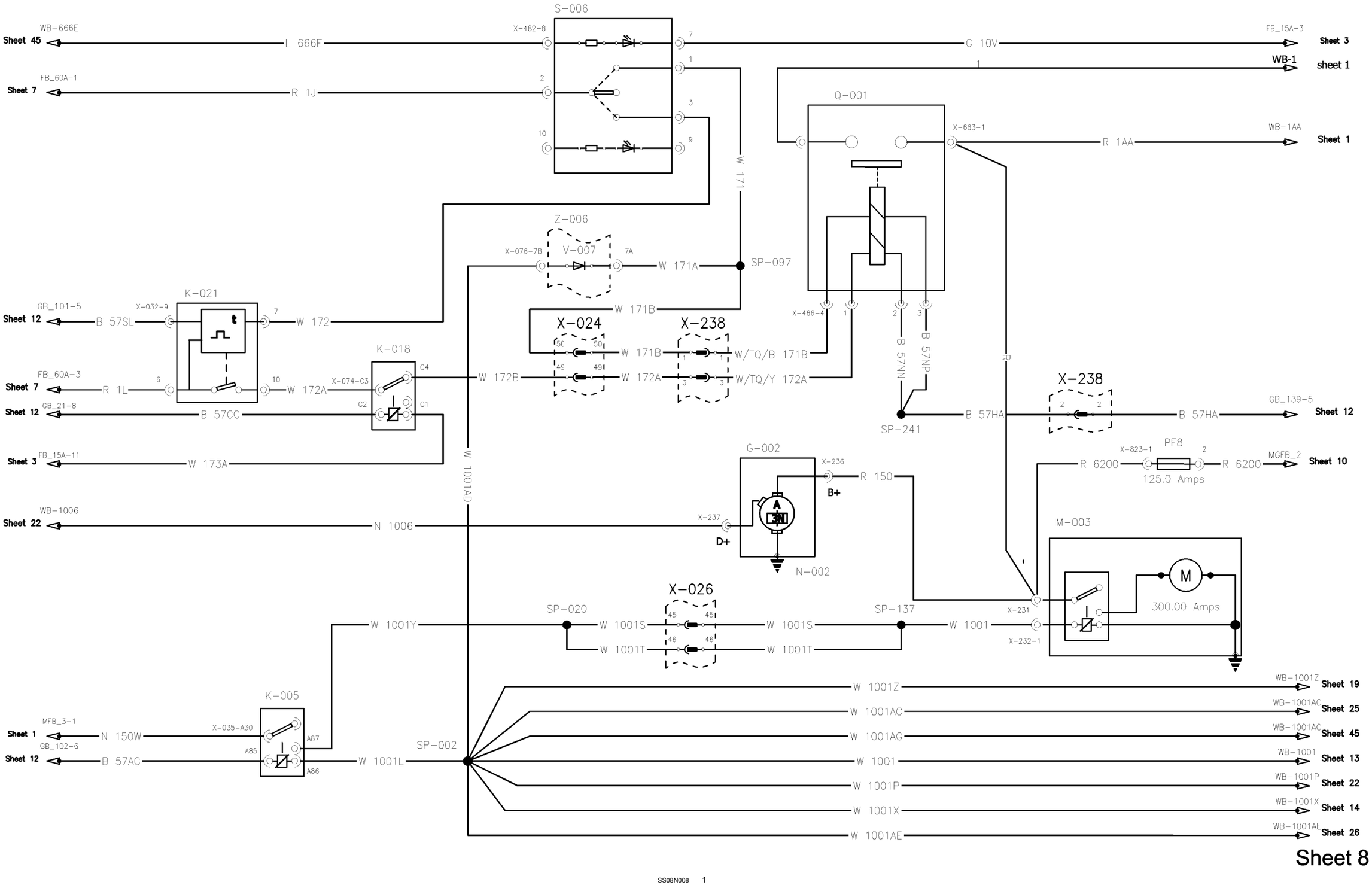

Sheet 8

SS08N008 1

https://tractormanualz.com/

Wiring harness - Electrical schematic frame 09 Start/Charging (without Isolator)

Component	Connector	Description
G002	**X236**, **X237**	Alternator
M003	**X231**, **X232**	Starter Motor
PF8	**X823**	Mega Fuse, Grid & Fuel Heater (**125 A**)
Additional Connectors: **X026**		

Wire Colour Codes							
B	Black	S	Slate	G	Green	P	Purple
N	Brown	R	Red	LG	Light Green	K	Pink
LN	Light Brown	O	Orange	U	Blue	W	White
L	Lilac	Y	Yellow	TQ	Turquoise		

https://tractormanualz.com/

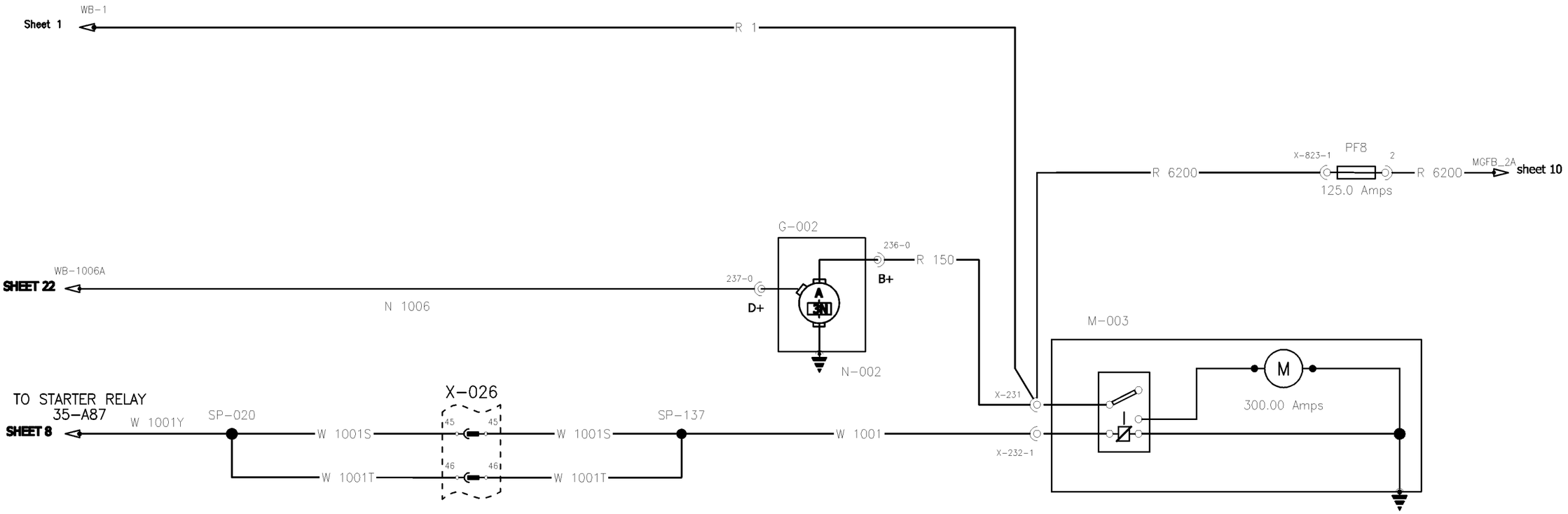

Sheet 9

SS08N009 1

https://tractormanualz.com/

Wiring harness - Electrical schematic frame 10 ECU (Engine ECU)

Component	Connector	Description
A057	**X213**, **X218**	Engine Control Unit
B013	**X828**	Boost Pressure Sensor
B014	**X829**	Oil Pressure Sensor
B015	**X830**	Rail Pressure Sensor
B016	**X831**	Coolant Temperature Sensor
B017	**X832**	Fuel Temperature Sensor
B018	**X835**	Camshaft Speed Sensor
B019	**X834**	Increment Speed Sensor
K023	**X215**	Grid Heater Relay
K024	**X216**	Fuel Heater Relay
R001	-	Fuel Heater
R002	-	Grid Heater
Y001	**X573**	Exhaust Brake Solenoid
Y011	**X833**	High Pressure Pump
Z008	**X811**	Visctronic Fan
Additional Connectors: **X026**, **X219**		

Wire Colour Codes

B	Black	S	Slate	G	Green	P	Purple
N	Brown	R	Red	LG	Light Green	K	Pink
LN	Light Brown	O	Orange	U	Blue	W	White
L	Lilac	Y	Yellow	TQ	Turquoise		

https://tractormanualz.com/

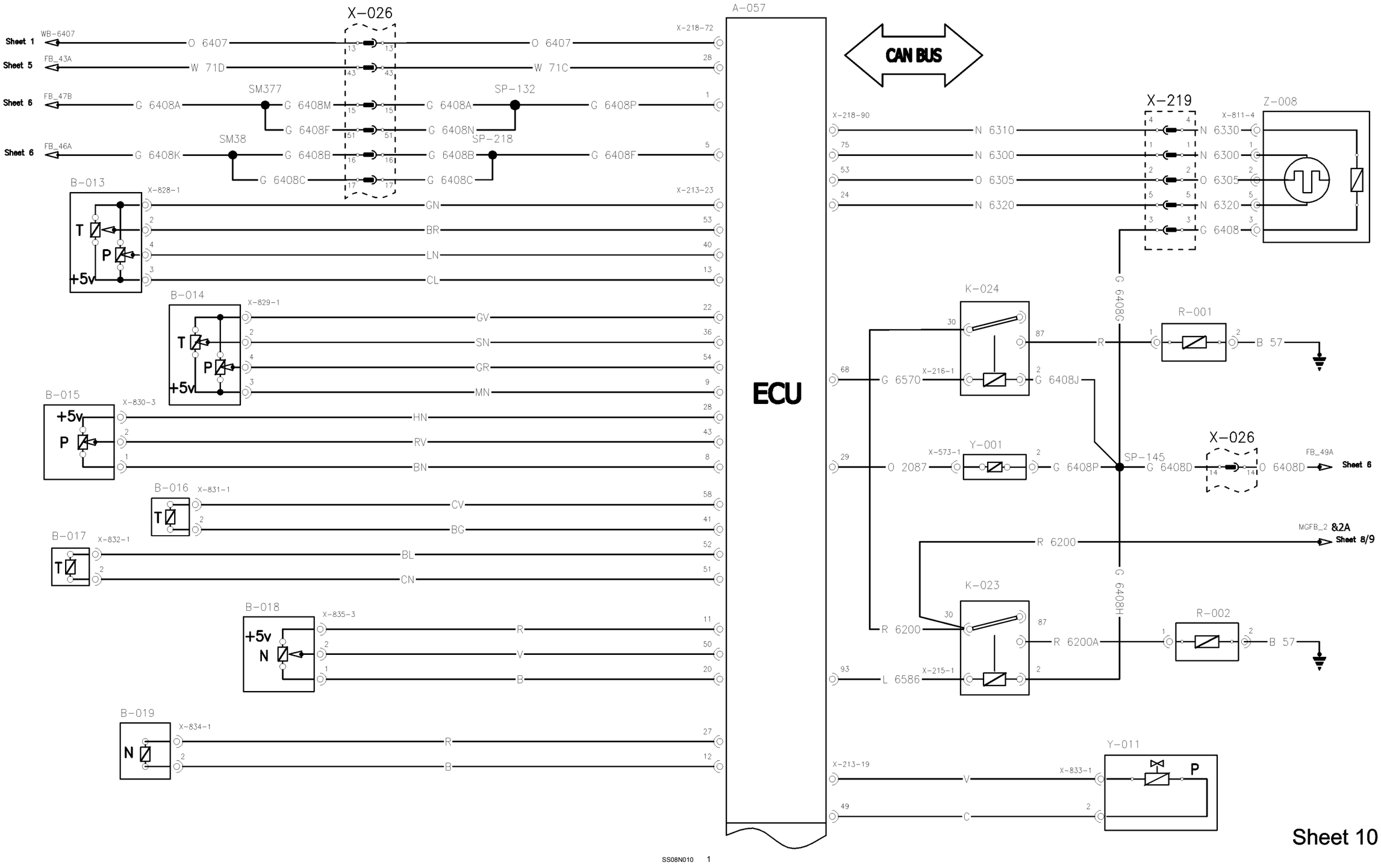

https://tractormanualz.com/

Wiring harness - Electrical schematic frame 11 Engine Control Unit (Engine ECU)

Component	Connector	Description
A057	**X213**, **X218**	Engine Control Unit
A058	**X825**	Cylinders 1 & 2
A059	**X826**	Cylinders 3 & 4
A060	**X827**	Cylinders 5 & 6
B012	**X242**	Water In Fuel Sensor
K046	**X740**	Reversible Fan Relay
M012	**X739**	Reversible Fan Compressor
Y017	**X739**	Reversible Fan Valve
Z010	**X739**	Reversible Fan Compressor / Valve
Additional Connectors: **X026**, **X239**		

Wire Colour Codes

B	Black	S	Slate	G	Green	P	Purple
N	Brown	R	Red	LG	Light Green	K	Pink
LN	Light Brown	O	Orange	U	Blue	W	White
L	Lilac	Y	Yellow	TQ	Turquoise		

https://tractormanualz.com/

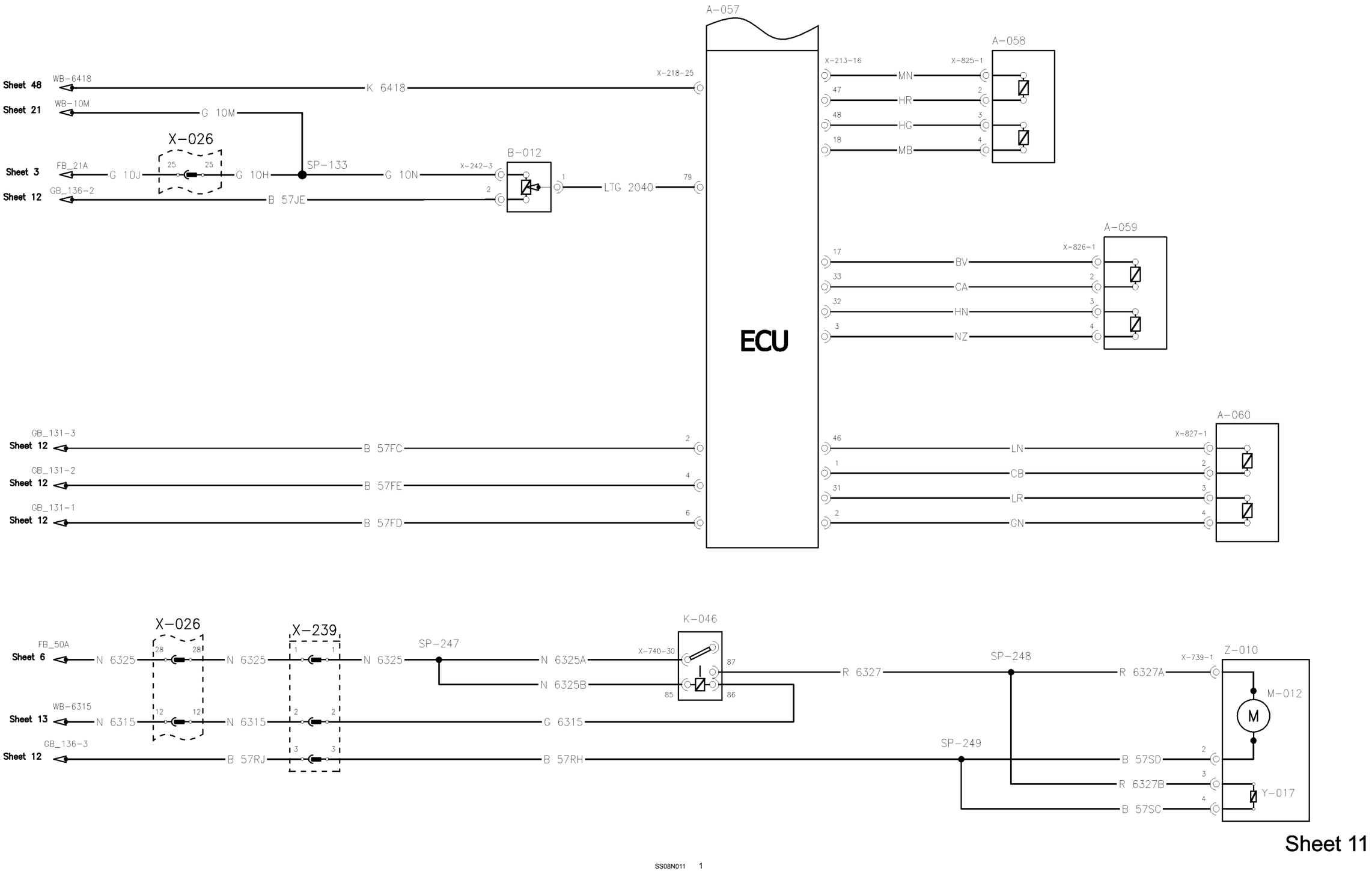

Sheet 11

SS08N011 1

https://tractormanualz.com/

Wiring harness - Electrical schematic frame 12 Power Distribution (Power Earthing)

Component	Connector	Description
-	**X030A**	Earth Header 2 to SP102
-	**X030B**	Earth Header 2 to SP101
-	**X030C**	Earth Header 2 to SP021
-	**X086C**	Earth Header 1 to SP087
-	**X214**	Earth Point - Electronic Module to SP143, 136, 139
Additional Connectors: -		

Wire Colour Codes

B	Black	S	Slate	G	Green	P	Purple
N	Brown	R	Red	LG	Light Green	K	Pink
LN	Light Brown	O	Orange	U	Blue	W	White
L	Lilac	Y	Yellow	TQ	Turquoise		

https://tractormanualz.com/

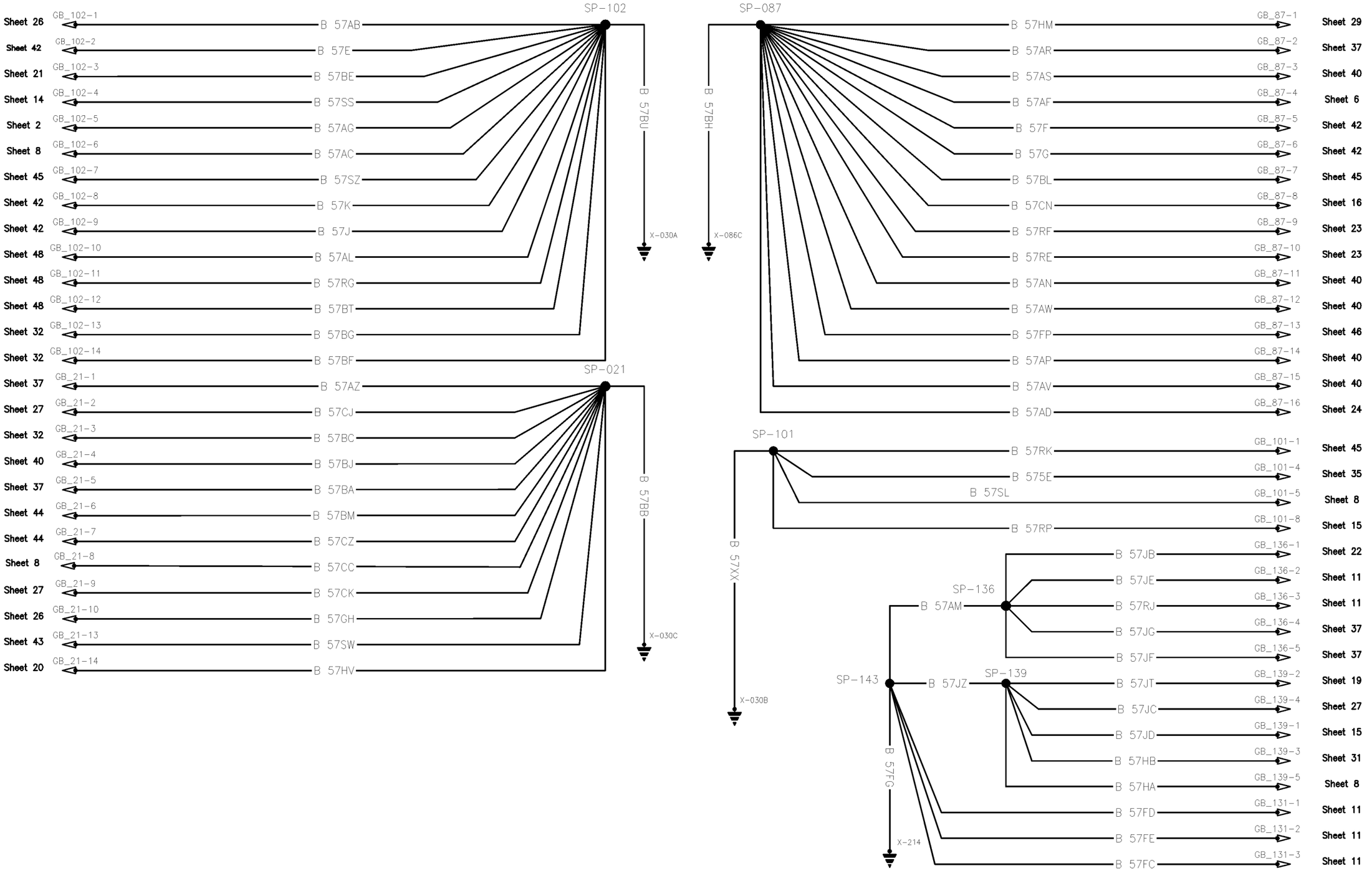

Sheet 12

SS08N012 1

https://tractormanualz.com/

Wiring harness - Electrical schematic frame 13 Transmission (Transmission Controller)

Component	Connector	Description
A066	**X091**, **X092**, **X093**, **X094**, **X095**, **X097**, **X099**	Central Control Unit
A067	**X015**	Foot Throttle
B028	**X525**	Hydrostat Input Speed Sensor
B029	**X526**	Ring Speed Sensor
B030	**X524**	Output Wheel Speed Sensor
B031	**X546**	A Clutch Pressure Sensor
B032	**X547**	B Clutch Pressure Sensor
B033	**X549**	Brake Pressure Sensor
B035	**X289**	Fly Wheel Speed Sensor
Y024	**X528**	Clutch Solenoid B
Y025	**X527**	Clutch Solenoid A
Y034	**X545**	Solenoid Valve Dump
Y035	**X654**	Brake Lubrication Control Solenoid
Y038	**X276**	Diff Lock Solenoid
Y040	**X279**	4WD Solenoid
Y544	**X544**	Solenoid Valve Hydrostat 1
-	**X326**	Earth Transmission to SP152, 161
Additional Connectors: **X020**, **X022**		

Wire Colour Codes

B	Black	S	Slate	G	Green	P	Purple
N	Brown	R	Red	LG	Light Green	K	Pink
LN	Light Brown	O	Orange	U	Blue	W	White
L	Lilac	Y	Yellow	TQ	Turquoise		

https://tractormanualz.com/

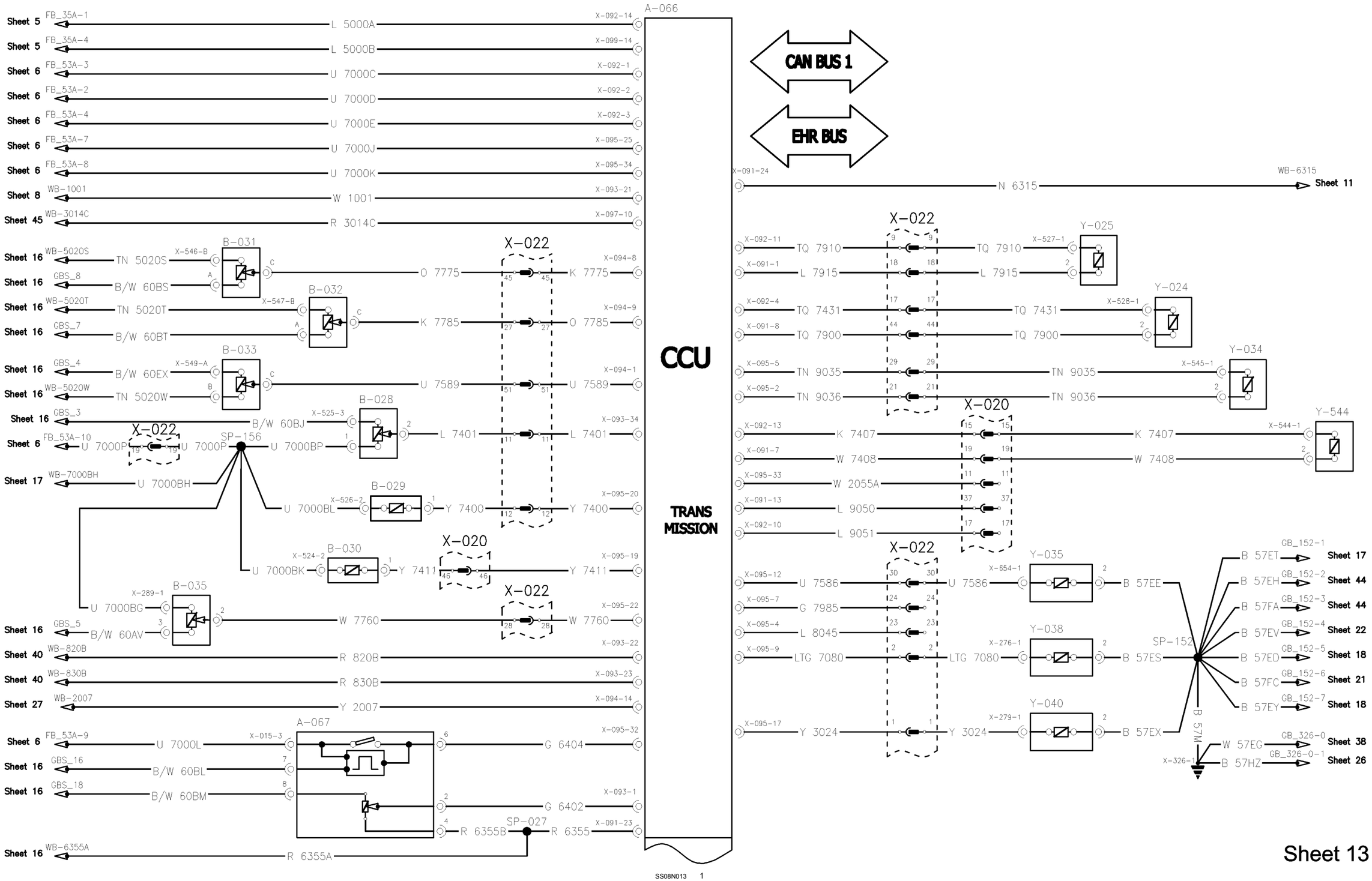

https://tractormanualz.com/

Wiring harness - Electrical schematic frame 14 Transmission (Transmission Controller)

Component	Connector	Description
A066	**X091**, **X092**, **X093**, **X094**, **X095**, **X097**	Central Control Unit
B036	**X273**	Transmission Oil Pressure Sensor
B041	**X290**	Transmission Oil Temp Sensor
R005	**X002**	Clutch Potentiometer
R010	**X532**	Potentiometer Synchroniser F1-F3
R011	**X533**	Potentiometer Synchroniser F2-R1
R012	**X534**	Potentiometer Synchroniser F4-R2
S003	**X001**	Clutch Switch
S090	**X012**	Park Switch
S091	**X012**	Neutral- Switch
S092	**X012**	FWD- OR- REV Switch
S093	**X012**	Not Park- Switch
S094	**X012**	FWD- Switch
S095	**X012**	REV- Switch
Y020	**X537**	Solenoid Valve F1
Y026	**X543**	Solenoid Valve F2
Y027	**X538**	Solenoid Valve F3
Y028	**X542**	Solenoid Valve F4
Y032	**X541**	Solenoid Valve R2
Y033	**X536**	Solenoid Valve R1
Z062	**X012**	Shuttle Lever
-	**X086B**	Earth Header 1 to SP075
-	**X096**	Case Earth CCM & ACU
Additional Connectors: **X020**, **X022**		

Wire Colour Codes

B	Black	S	Slate	G	Green	P	Purple
N	Brown	R	Red	LG	Light Green	K	Pink
LN	Light Brown	O	Orange	U	Blue	W	White
L	Lilac	Y	Yellow	TQ	Turquoise		

https://tractormanualz.com/

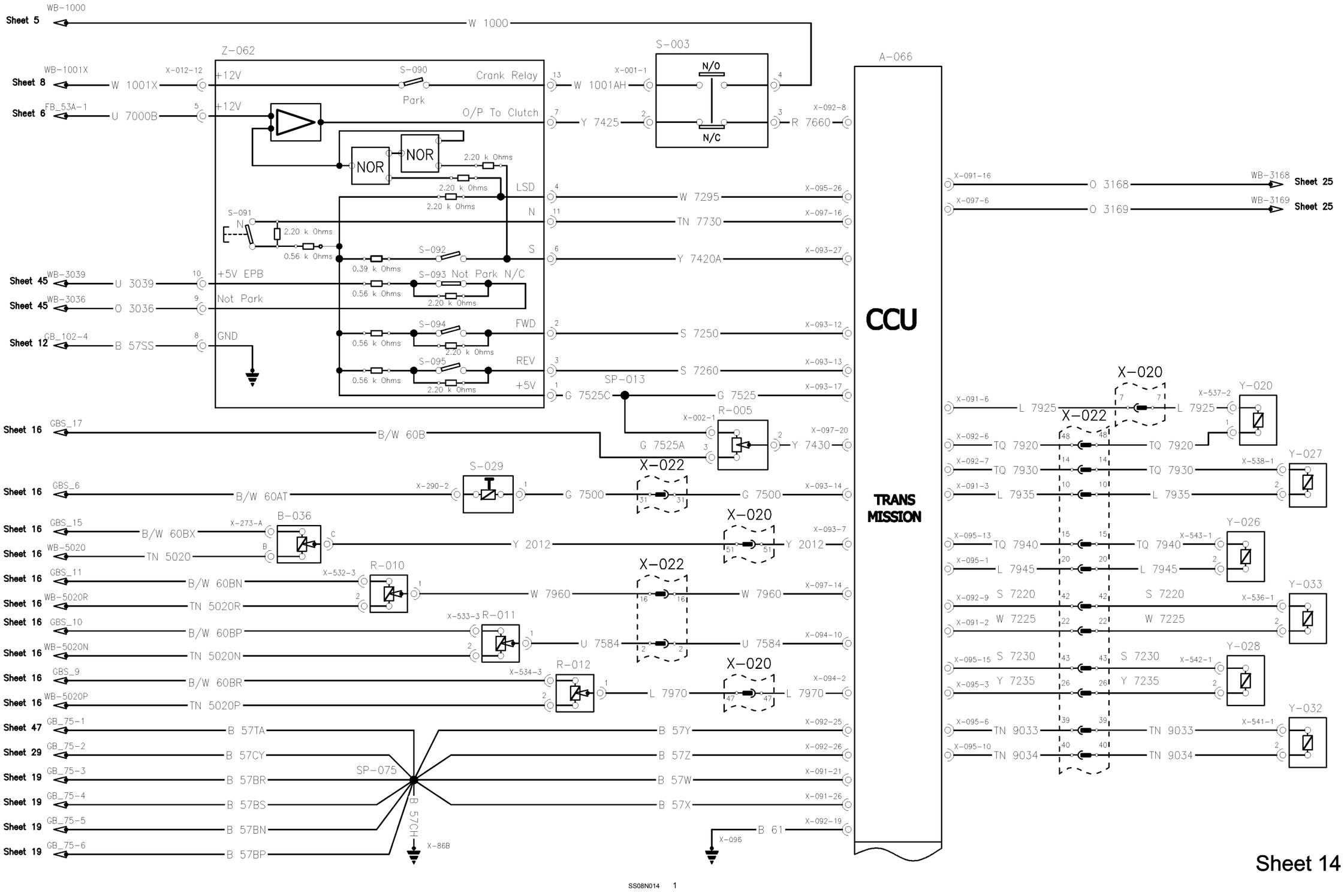

https://tractormanualz.com/

Wiring harness - Electrical schematic frame 15 Electronic Draft Control (Transmission Controller)

Component	Connector	Description
A066	**X091**, **X092**, **X093**, **X094**, **X097**	Central Control Unit
B005	**X266**	Draft Pin Left Hand
B006	**X256**	Draft Pin Right Hand
B042	**X233**	Radar Sensor
R020	**X267**	Rockshaft Potentiometer
S010	**X681**	Hydraulics Master Switch
S024	**X407**	Rear Hitch Switch Left Hand
S050	**X407**	Rear Hitch Switch Right Hand
-	**X661**	High Flow Pump (detection)
-	**X684**	Front Hitch Detect
Y012	**X268**	EDC Valve Raise
Y013	**X269**	EDC Valve Lower
Additional Connectors: **X022**, **X024**, **X110**, **X127**		

Wire Colour Codes

B	Black	S	Slate	G	Green	P	Purple
N	Brown	R	Red	LG	Light Green	K	Pink
LN	Light Brown	O	Orange	U	Blue	W	White
L	Lilac	Y	Yellow	TQ	Turquoise		

https://tractormanualz.com/

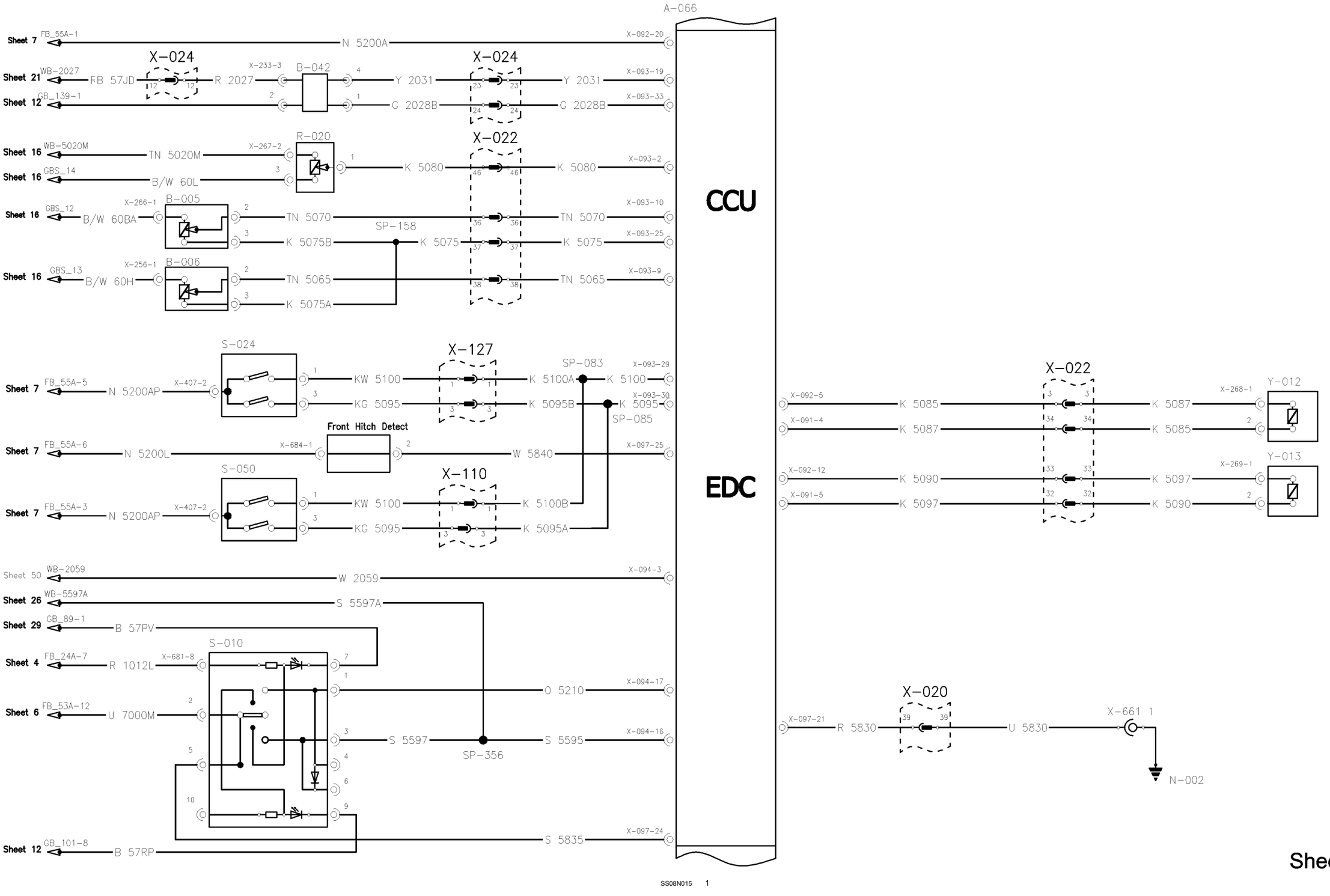

https://tractormanualz.com/

Wiring harness - Electrical schematic frame 16 5V Supply, Sensor Ground, Seat (Transmission Controller)

Component	Connector	Description
A066	**X092**, **X093**, **X095**, **X097**	Central Control Unit
M009	**X081**	Seat- Compressor
R017	**X081**	Seat- Heating
S096	**X081**	Seat- Switch
Z065	**X081**	Seat Assembly
Additional Connectors: **X020**, **X022**, **X026**		

Wire Colour Codes

B	Black	S	Slate	G	Green	P	Purple
N	Brown	R	Red	LG	Light Green	K	Pink
LN	Light Brown	O	Orange	U	Blue	W	White
L	Lilac	Y	Yellow	TQ	Turquoise		

https://tractormanualz.com/

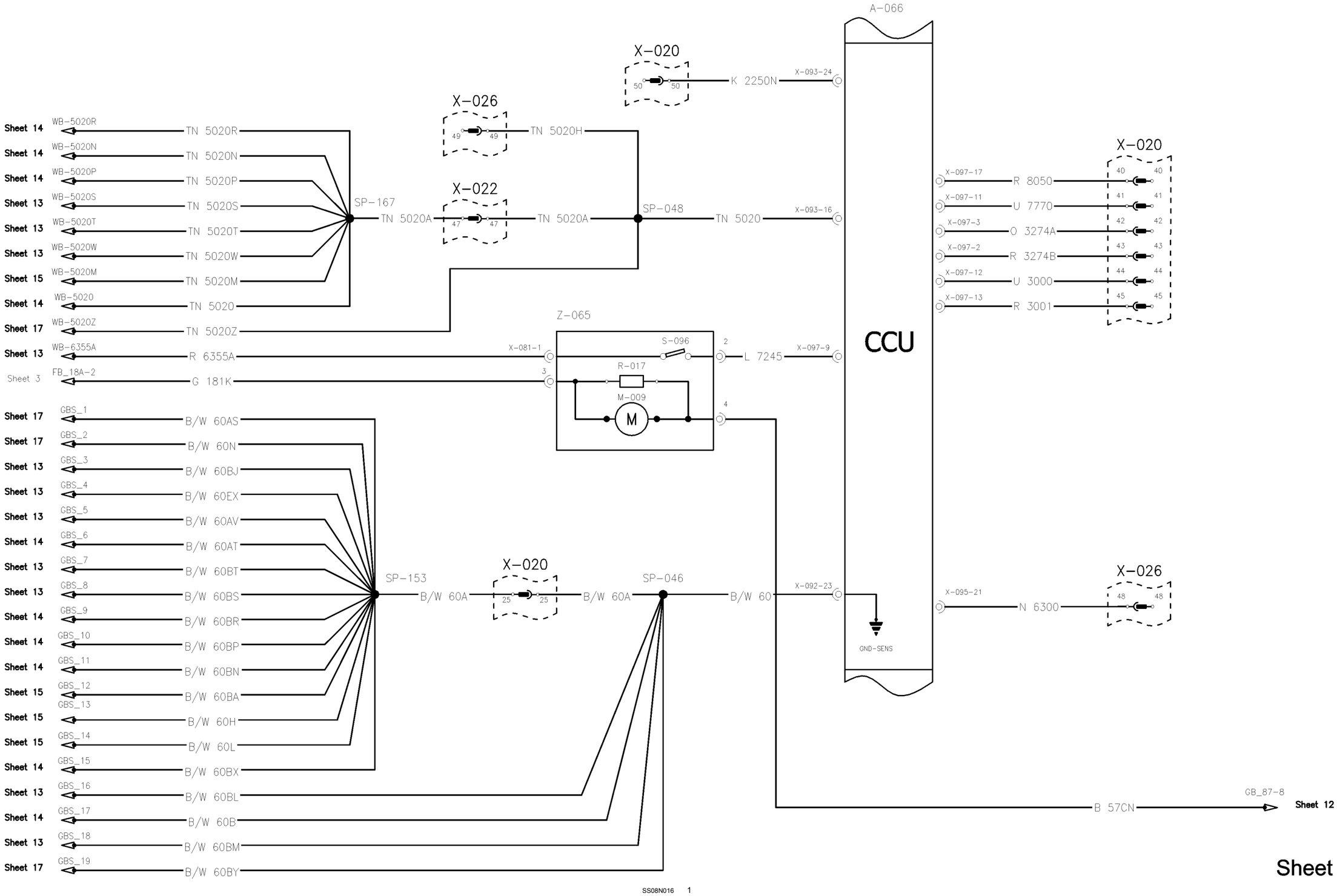

Sheet 16

https://tractormanualz.com/

Wiring harness - Electrical schematic frame 17 Transmission (Power Take Off)

Component	Connector	Description
A066	**X091**, **X093**, **X094**, **X095**, **X097**	Central Control Unit
B009	**X780**	Rear PTO Shift Position Sensor
B025	**X262**	PTO Twist Sensor
B026	**X251**	PTO Speed Sensor
K053	**X782**	EL.Shiftable PTO Drive Upper Speed Relay
K054	**X783**	EL.Shiftable PTO Drive Lower Speed Relay
M781	**X781**	Actuator PTO Shift
S011	**X067**	Rear PTO Brake Switch
S039	**X784**	PTO Speed Select Switch
S047	**X406**	Rear PTO Switch Right Hand
S049	**X059A**	Lever Mounted PTO Brake Switch
S083	**X406**	Rear PTO Switch Left Hand
Y018	**X277**	Rear PTO Brake Solenoid
Y019	**X278**	Rear PTO Solenoid
-	**X059B**	Lever Mounted PTO Mating Half
Additional Connectors: **X022**, **X059B**, **X110**, **X127**, **X748**		

Wire Colour Codes

B	Black	S	Slate	G	Green	P	Purple
N	Brown	R	Red	LG	Light Green	K	Pink
LN	Light Brown	O	Orange	U	Blue	W	White
L	Lilac	Y	Yellow	TQ	Turquoise		

https://tractormanualz.com/

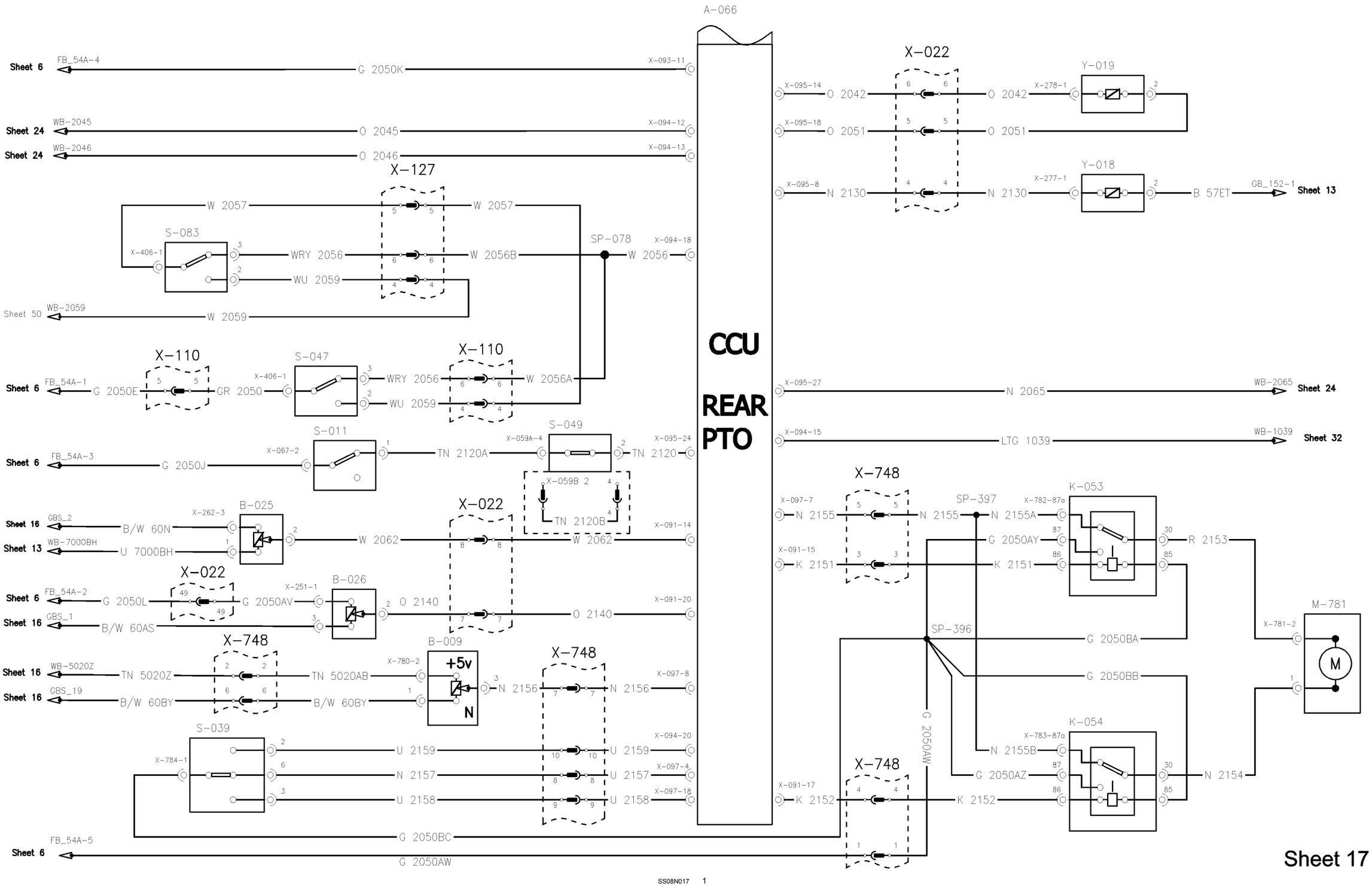

https://tractormanualz.com/

Wiring harness - Electrical schematic frame 18 SFA, EHR'S, Link Leveling (Auxiliary Control Unit)

Component	Connector	Description
A010	**X098**, **X099**, **X100**, **X101**, **X102**	Auxiliary Control Unit
B011	**X662**	Front Axle Position Sensor
B023	**X701**	Suspension Accelerometer
S034	**X401**	EHR 3 Switch Fender Right
S035	**X401**	EHR 3 Switch Fender Left
S043	**X509**	Front Suspension Not Pressure
Y002	**X505**	Suspension Raise Solenoid
Y003	**X506**	Suspension Lower Solenoid
Y004	**X507**	Upper Lockout Solenoid
Y005	**X508**	Lower Lockout Solenoid
Y006	**X672**	Link Levelling Solenoid 2
Y007	**X673**	Link Levelling Solenoid 3
Y008	**X674**	Link Levelling Solenoid 4
Y009	**X675**	Link Levelling Solenoid 5
Y014	**X671**	Link Levelling Solenoid 1
Additional Connectors: **X020**, **X022**, **X024**, **X227**, **X234**, **X248**, **X259**, **X402**, **X408**, **X659**, **X817**		

Wire Colour Codes

B	Black	S	Slate	G	Green	P	Purple
N	Brown	R	Red	LG	Light Green	K	Pink
LN	Light Brown	O	Orange	U	Blue	W	White
L	Lilac	Y	Yellow	TQ	Turquoise		

https://tractormanualz.com/

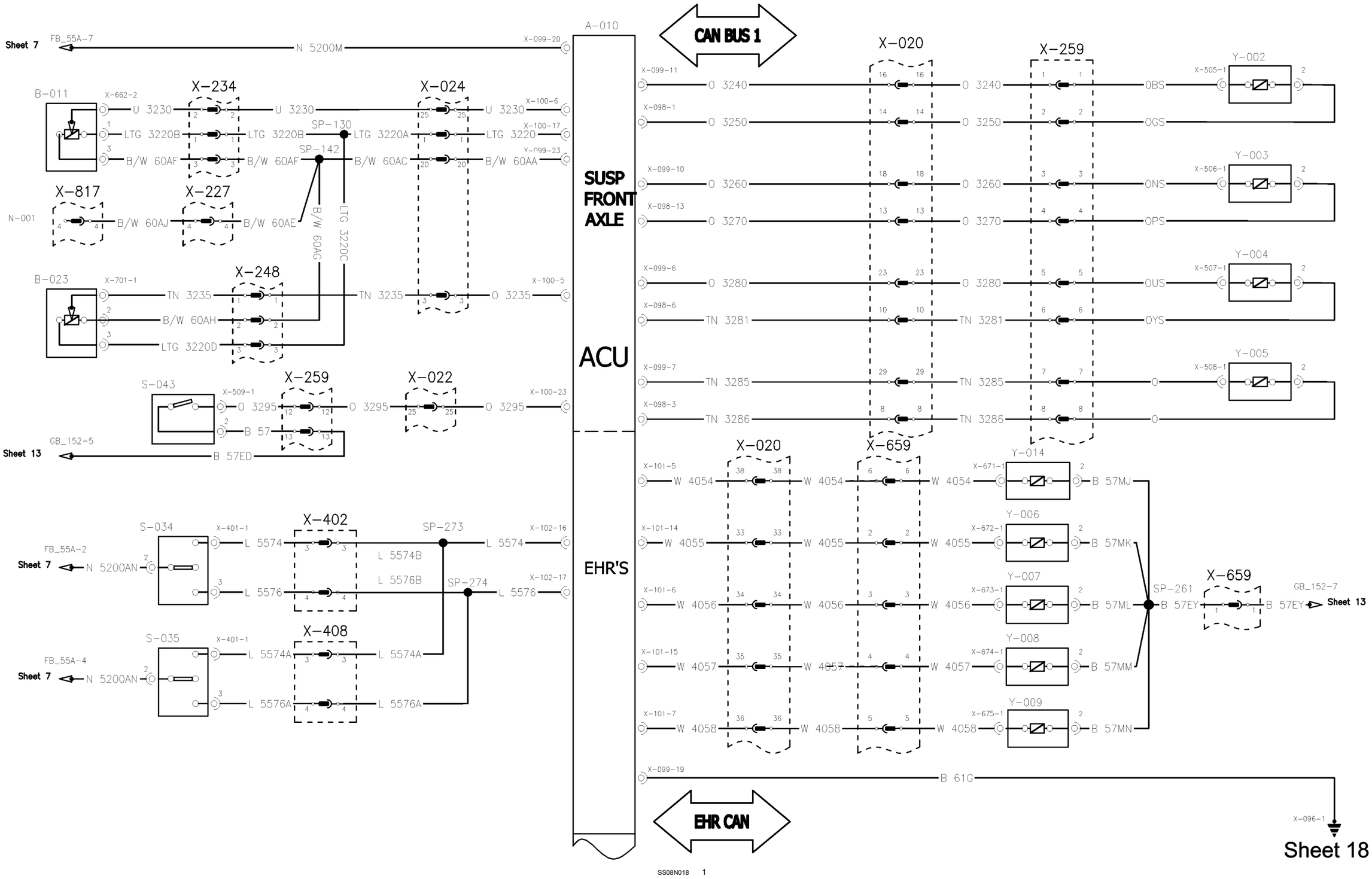

https://tractormanualz.com/

Wiring harness - Electrical schematic frame 19 Front Hitch, PTO (Auxiliary Control Unit)

Component	Connector	Description
A010	**X098**, **X099**, **X100**, **X101**	Auxiliary Control Unit
B027	**X395**	Front Hitch Position Sensor
S001	**X394**	Front Hitch Raise
S009	**X392**	Front Hitch Lower
Y016	**X393**	Front PTO Solenoid
Additional Connectors: **X024**, **X026**, **X227**, **X817**		

Wire Colour Codes

B	Black	S	Slate	G	Green	P	Purple
N	Brown	R	Red	LG	Light Green	K	Pink
LN	Light Brown	O	Orange	U	Blue	W	White
L	Lilac	Y	Yellow	TQ	Turquoise		

https://tractormanualz.com/

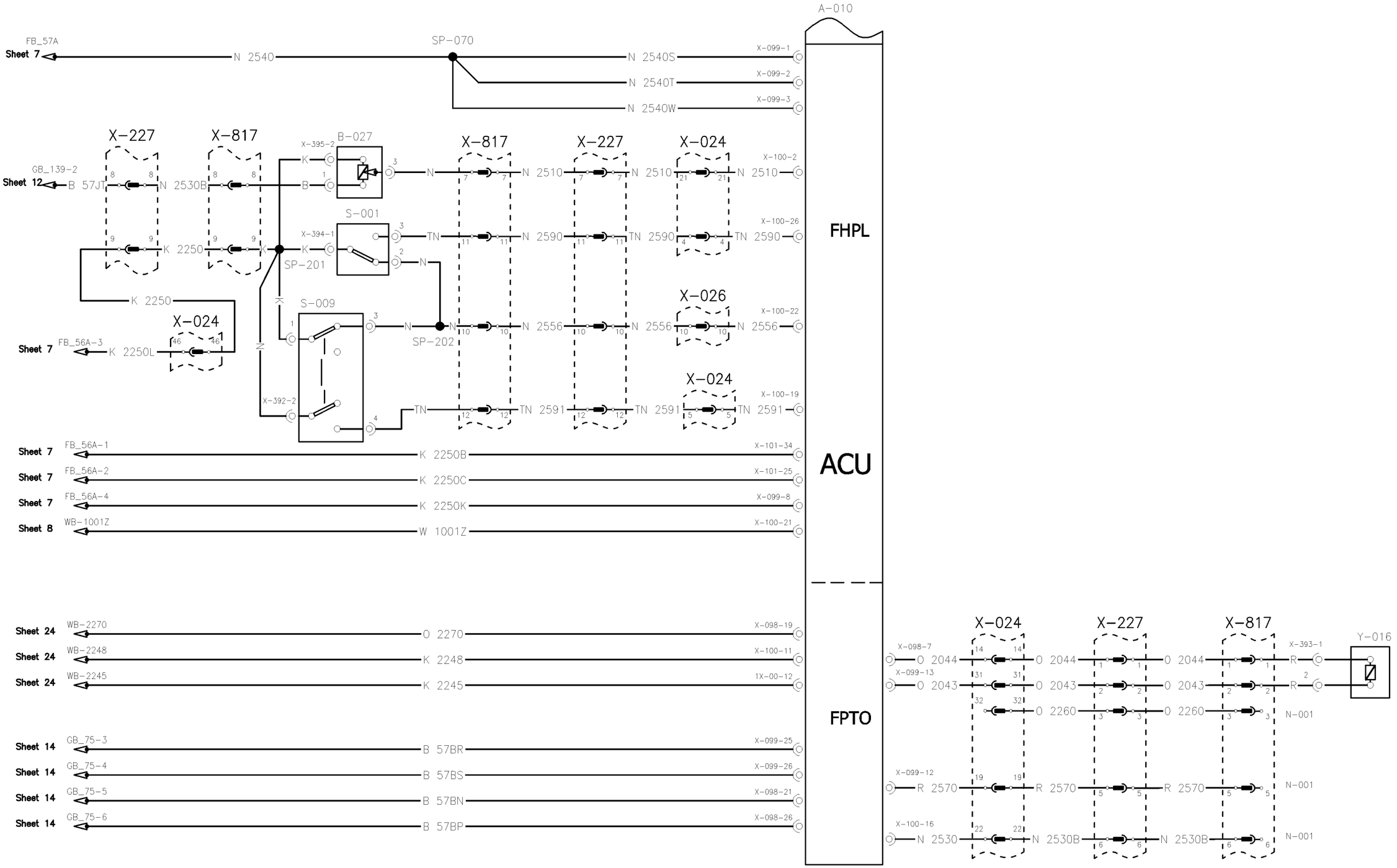

Sheet 19

SS08N019 1

https://tractormanualz.com/

Wiring harness - Electrical schematic frame 20 Fast Steer (Steering Control Unit)

Component	Connector	Description
A061	**X621**	Control Unit Fast Steer
B020	**X625**	Proximity Sensor
B021	**X626**	Position Transducer
S004	**X624**	Fast Steer Control Switch
Y015	**X627**	Fast Steer Solenoid
Additional Connectors: **X623**		

Wire Colour Codes

B	Black	S	Slate	G	Green	P	Purple
N	Brown	R	Red	LG	Light Green	K	Pink
LN	Light Brown	O	Orange	U	Blue	W	White
L	Lilac	Y	Yellow	TQ	Turquoise		

https://tractormanualz.com/

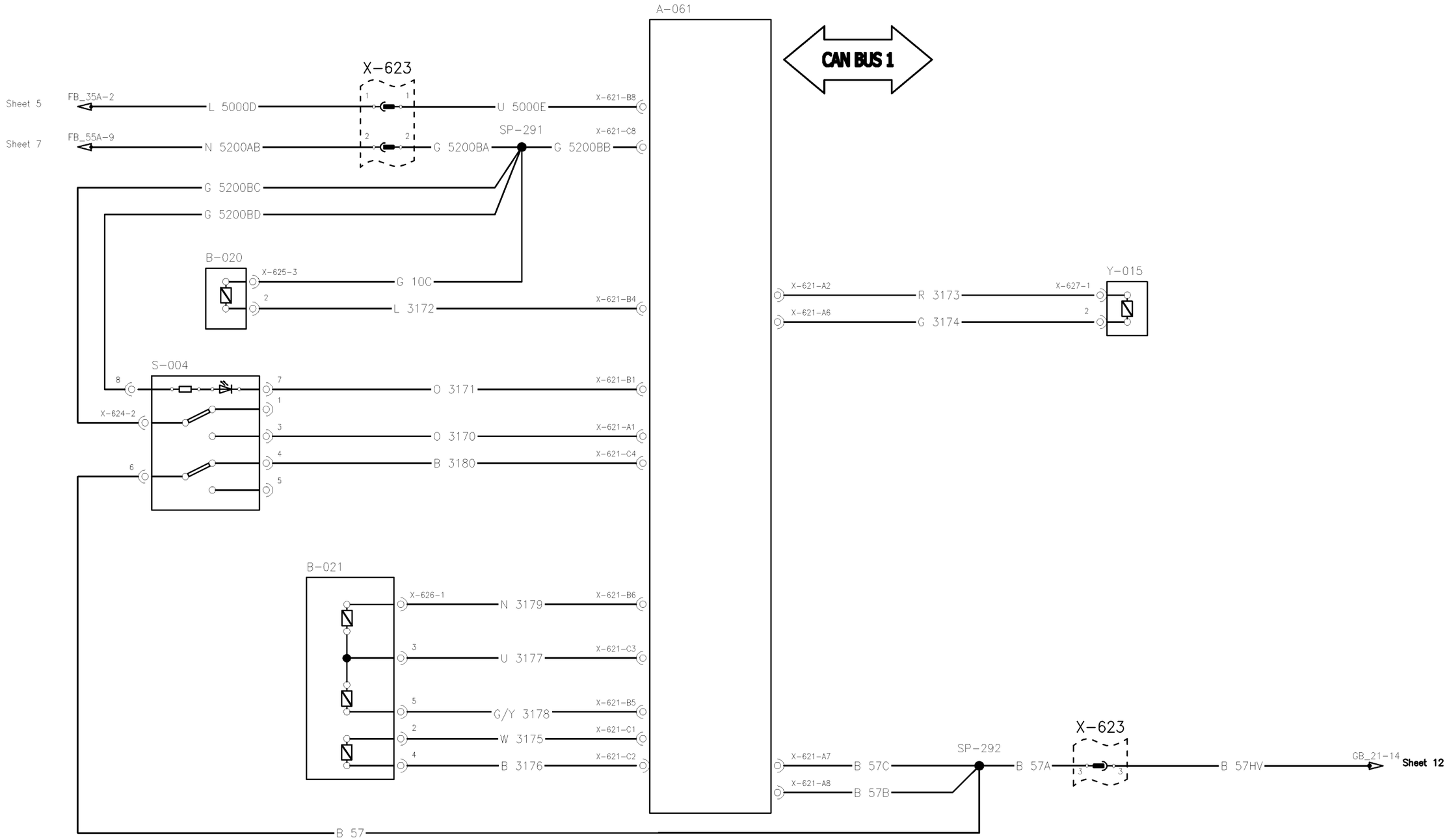

Sheet 20

SS08N020 1

https://tractormanualz.com/

Wiring harness - Electrical schematic frame 21 Lighting (Instrument Cluster)

Component	Connector	Description
A014	**X008**	Keypad
A063	**X005**, **X006**, **X009**	Instrument Cluster Unit
B004	**X235**	Steering Angle Sensor (Auto Guidance)
B024	**X265**	Fuel Tank Sensor
B100	**X550**	Vane Pump Pressure Sensor
S008	**X551**	Exhaust Brake
S020	**X016**	Brake Pedals Latched switch
S029	**X221**	Brake Fluid Level
S086	**X302**, **X303**	Power Steering Pressure Switch
X436	**X114**	ISO 11786 Signal Socket
-	**X096**	Case Earth CCM & ACU to SP067
Additional Connectors: **X020**, **X022**, **X024**, **X026**, **X106**, **X114**		

Wire Colour Codes

B	Black	S	Slate	G	Green	P	Purple
N	Brown	R	Red	LG	Light Green	K	Pink
LN	Light Brown	O	Orange	U	Blue	W	White
L	Lilac	Y	Yellow	TQ	Turquoise		

https://tractormanualz.com/

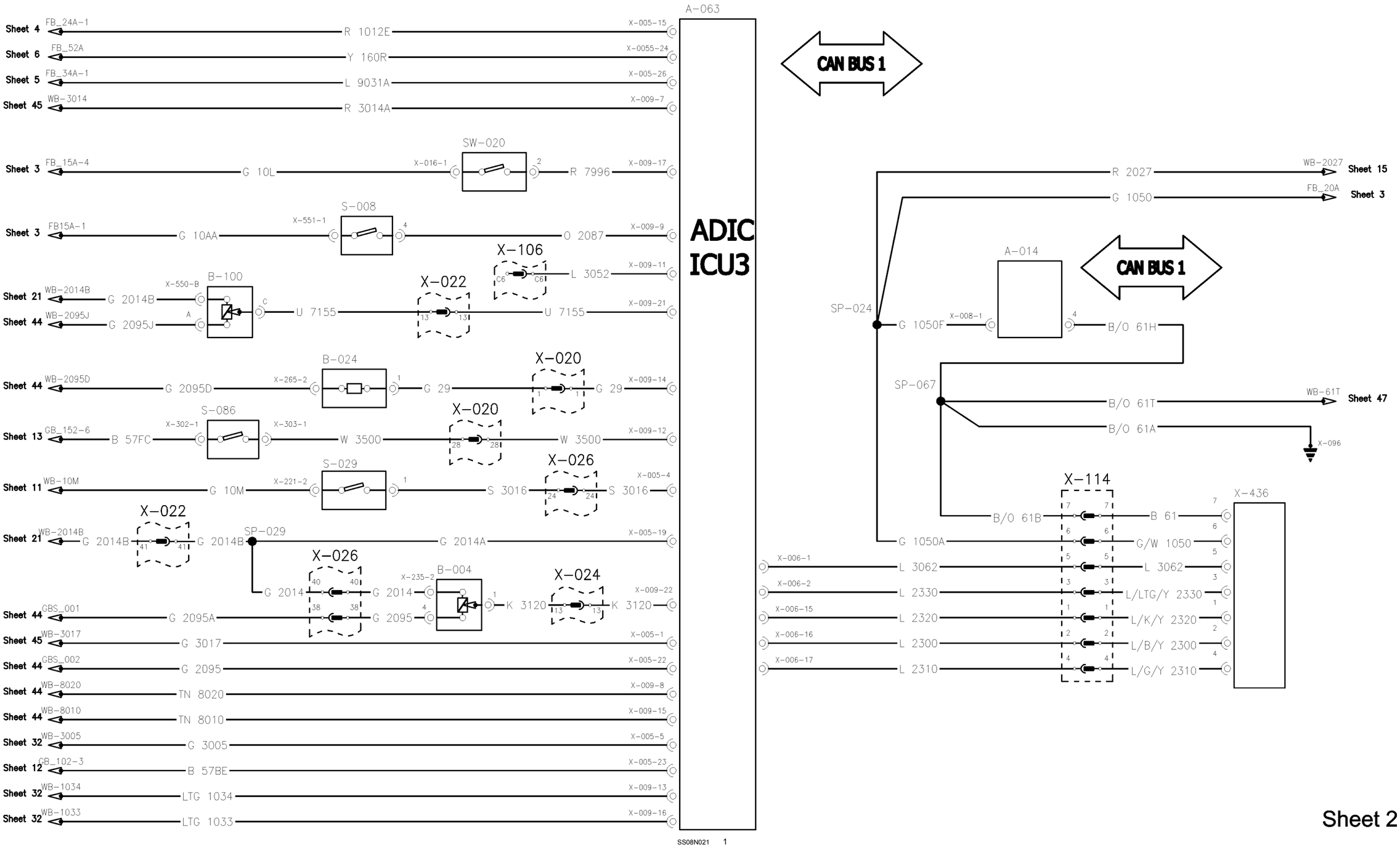

https://tractormanualz.com/

Wiring harness - Electrical schematic frame 22 Instruments (Instrument Cluster)

Component	Connector	Description
A063	**X005**, **X009**	Instrument Cluster Unit
S022	**X223**	Air Cleaner Switch
S028	**X474**	Hydraulic Filter Blocked (Vacuum Switch)
S037	**X473**	Low Hydraulic Charge Switch
Additional Connectors: **X020**, **X026**, **X683B**		

Wire Colour Codes

B	Black	S	Slate	G	Green	P	Purple
N	Brown	R	Red	LG	Light Green	K	Pink
LN	Light Brown	O	Orange	U	Blue	W	White
L	Lilac	Y	Yellow	TQ	Turquoise		

https://tractormanualz.com/

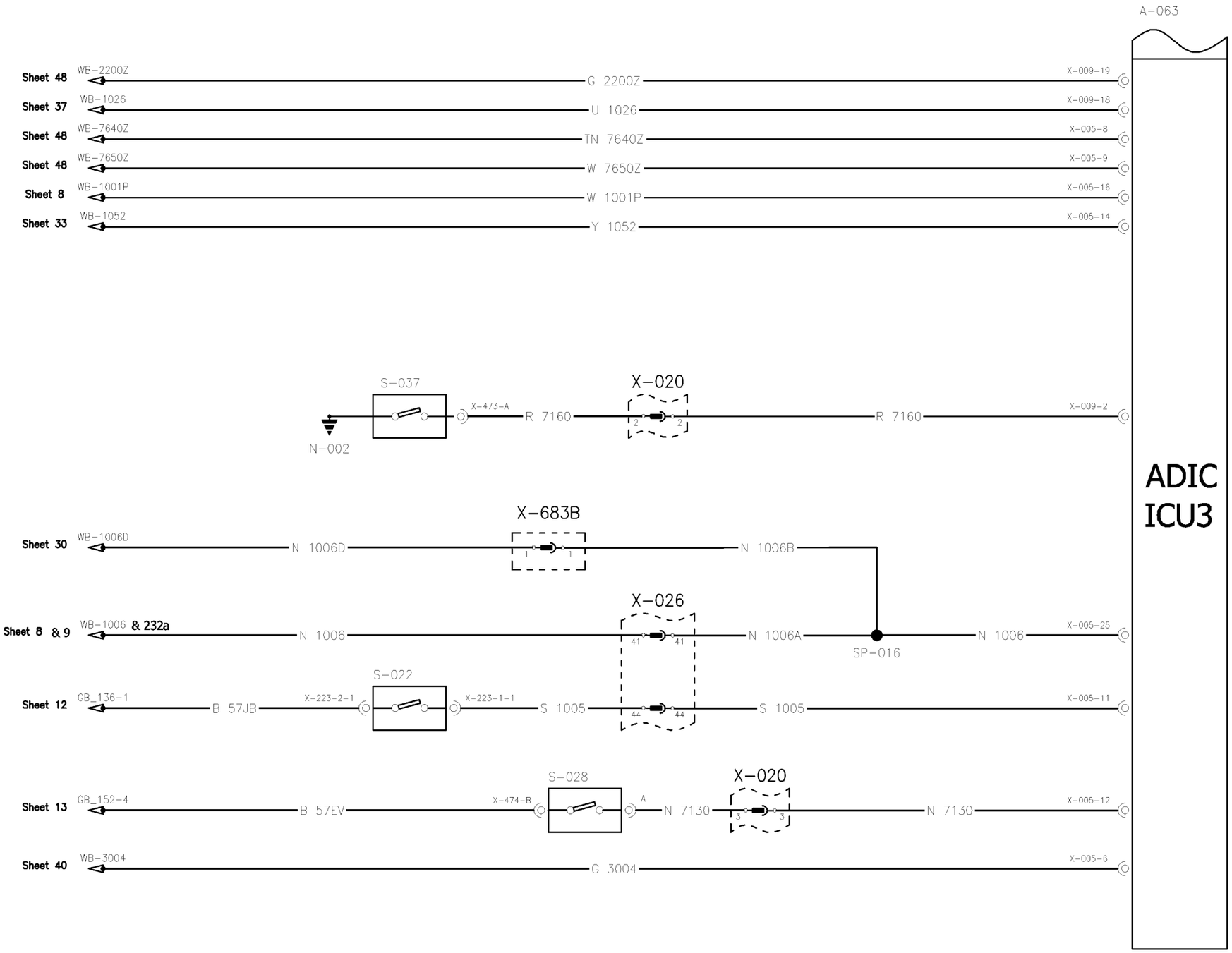

SS08N022 1

Sheet 22

https://tractormanualz.com/

Wiring harness - Electrical schematic frame 23 ECU (Armrest)

Component	Connector	Description
A011	X847	Integrated Control Switch Panel
A032	X846	Multi Function Handle Elektonic Modul
A081	**X776**	Armrest Control Unit (GARU)
B060	X846	Sensor Transmission Ratio
R031	X853	El.Hydraulic Remote 1 Control
R032	X853	El.Hydraulic Remote 2 Control
R033	X855	El.Hydraulic Remote 3 Control
R034	X855	El.Hydraulic Remote 4 Control
R035	X857	El.Hydraulic Remote 5 Control
R036	X858	El.Hydraulic Remote 6 Control
S114	X846	EHR1/5 Extend Switch
S115	X846	EHR1/5 Retract Switch
S116	X846	Rear Hitch Fast Raise Switch
S117	X846	Rear Hitch Fast Lower Switch
S119	X846	Float Control EHR1/5 Switch
S120	X846	Multi Function Handle Encoder
Z005	X858 / X861	El.Hydraulic Remote Lamps 5 & 6 & Swich
Z007	X845	Joystick 2
Z013	X852	Dual Throttle
Z032	X846	Multi Function Handle
Z043	X849	Front Hitch Setting
Z044	X850	Rear Hitch Setting
Additional Connectors: **X080**		

Wire Colour Codes

B	Black	S	Slate	G	Green	P	Purple
N	Brown	R	Red	LG	Light Green	K	Pink
LN	Light Brown	O	Orange	U	Blue	W	White
L	Lilac	Y	Yellow	TQ	Turquoise		

https://tractormanualz.com/

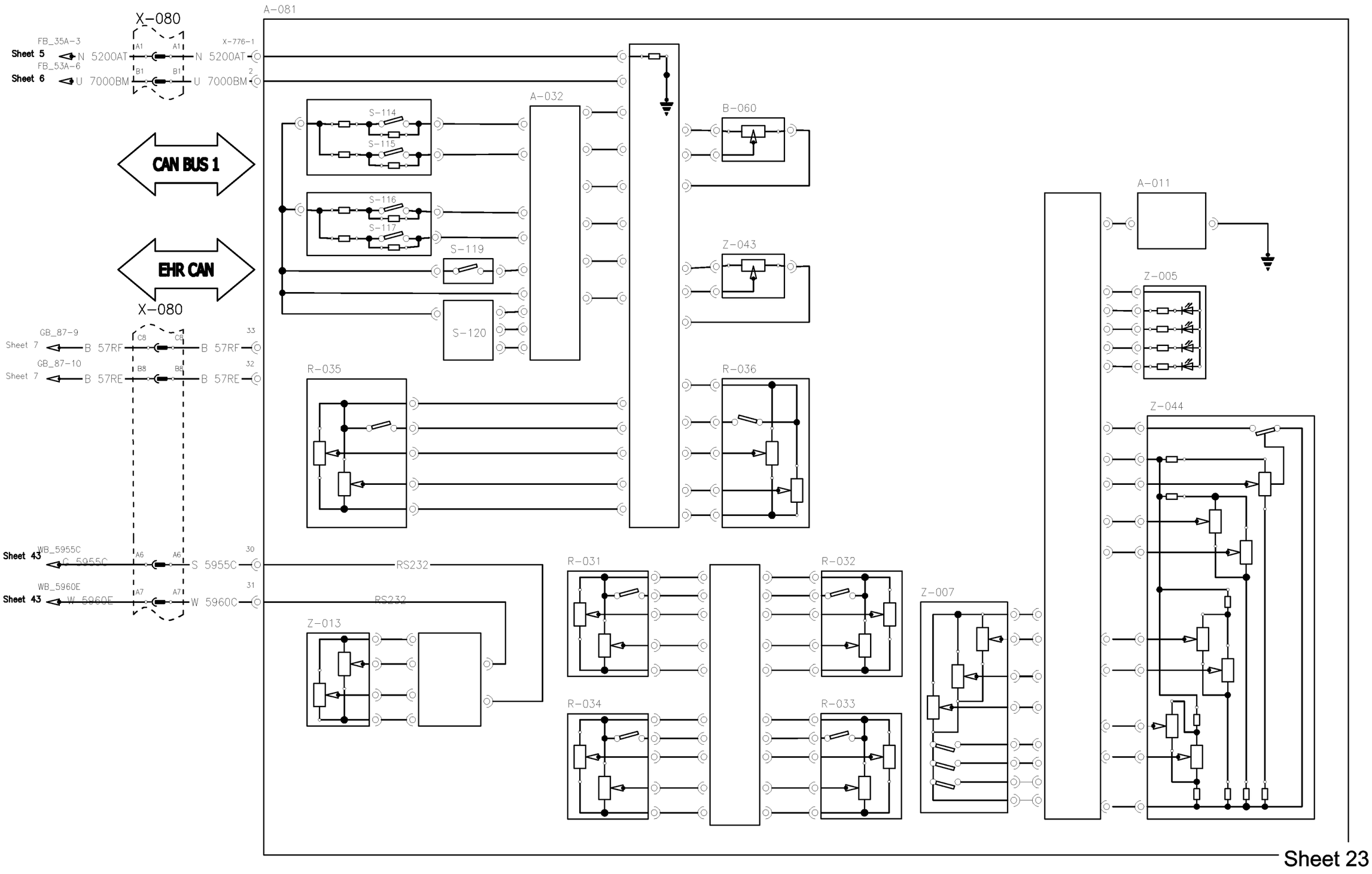

SS08N023 1

https://tractormanualz.com/

Wiring harness - Electrical schematic frame 24 ECU (Armrest)

Component	Connector	Description
A081	**X776**	Armrest Control Unit (GARU)
E100	X840	Rear PTO Lamp
E101	X841	Front PTO Lamp
M010	**X788**	Armrest Control Unit (GARU)
S002	X841	Front PTO Switch
S012	X840	Rear PTO Switch
S060	**X777**	Switch Adjust Motor
S121	X842	EHR Flow Control Encoder
Z003	X854 / X859	El.Hydraulic Remote Lamps 1 & 2 & Swich
Z004	X856 / X860	El.Hydraulic Remote Lamps 3 & 4 & Swich
Z006	X844	Joystick 1
Additional Connectors: **X080**, **X088**, **X787**		

Wire Colour Codes

B	Black	S	Slate	G	Green	P	Purple
N	Brown	R	Red	LG	Light Green	K	Pink
LN	Light Brown	O	Orange	U	Blue	W	White
L	Lilac	Y	Yellow	TQ	Turquoise		

https://tractormanualz.com/

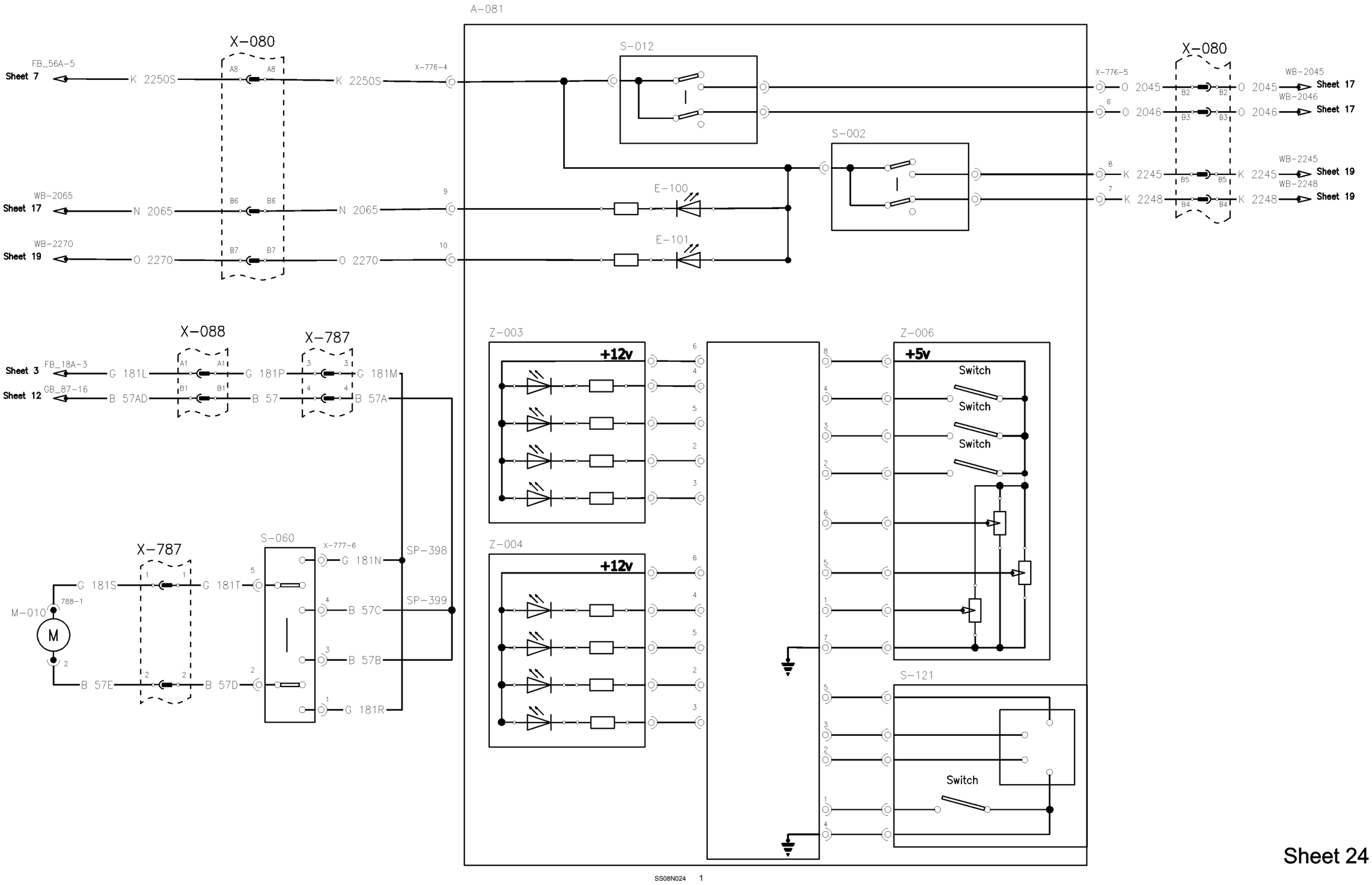

Sheet 24

https://tractormanualz.com/

Wiring harness - Electrical schematic frame 25 Steering (Auto Guidance)

Component	Connector	Description
A004	**X716**	Navigation Controller
A004	**X720**	Navigation Controller
A005	**X719**	GPS Receiver
A009	**X717**	Auto Guidance Data Logger
B003	**X709**	Steering Pressure Sensor
B004	**X235**	Steering Angle Sensor
K050	**X723**	Relay Base Crank Isolate
K051	**X724**	Relay Base Solenoid B
K052	**X725**	Relay Base Solenoid A
S005	**X714**	Auto Guidance Control Switch
Y044	**X712**	Auto Guidance Dump Solenoid
Y050	**X705**	Steering Solenoid Right Hand
Y051	**X706**	Steering Solenoid Left Hand
-	**X718**	Earth to SP338
Additional Connectors: **X623**, **X707**, **X710**, **X711**, **X715**, **X726**, **X727**		

Wire Colour Codes

B	Black	S	Slate	G	Green	P	Purple
N	Brown	R	Red	LG	Light Green	K	Pink
LN	Light Brown	O	Orange	U	Blue	W	White
L	Lilac	Y	Yellow	TQ	Turquoise		

https://tractormanualz.com/

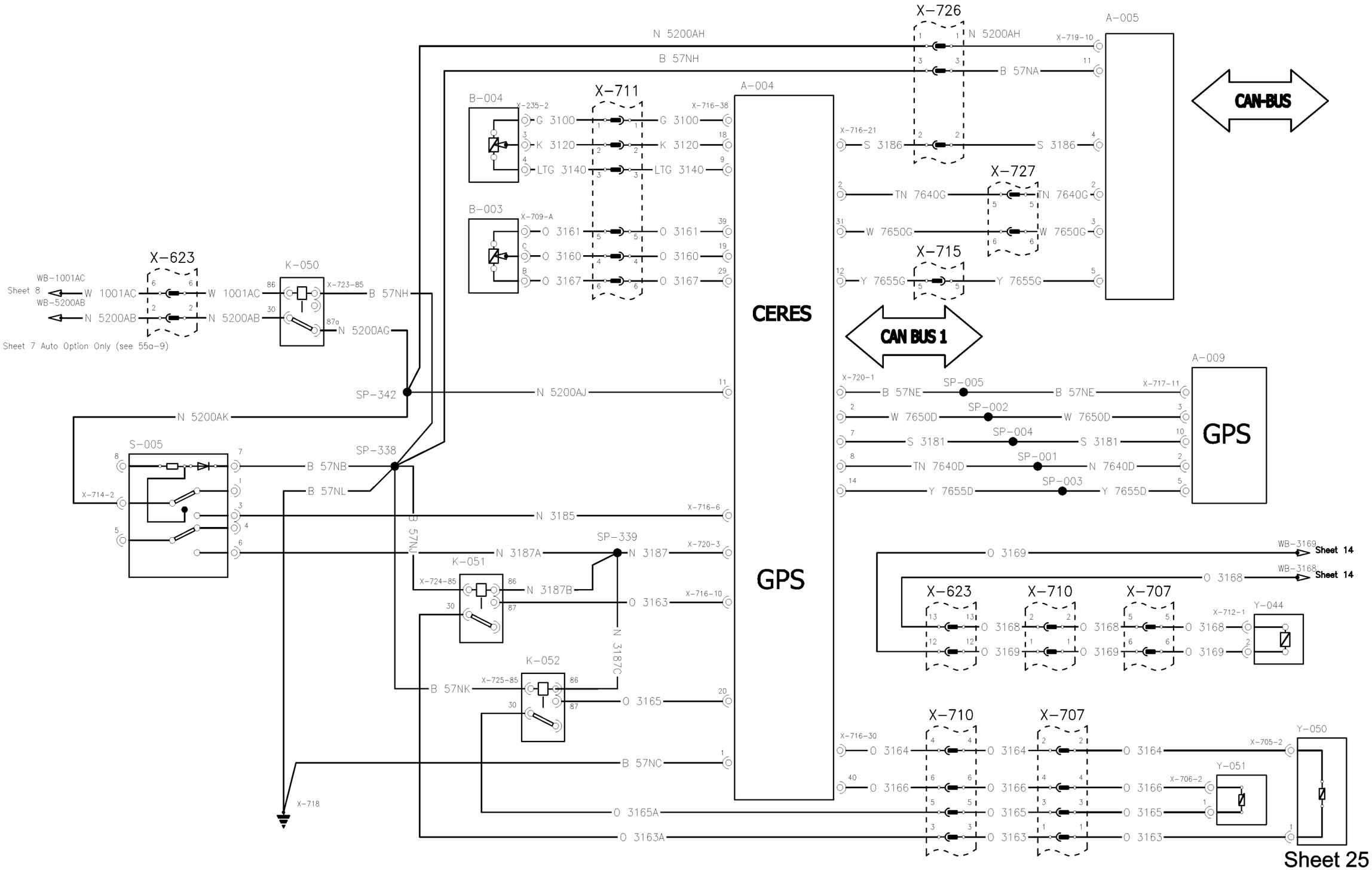

SS08N025 1

https://tractormanualz.com/

Wiring harness - Electrical schematic frame 26 Can Power (Can System)

Component	Connector	Description
-	**X732**	Can Dog Power
A001	X043	NH Display of Gear
A021	**X305**	El.Hydraulic Remote Valve 1
A022	**X306**	El.Hydraulic Remote Valve 2
A023	**X307**	El.Hydraulic Remote Valve 3
A024	**X308**	El.Hydraulic Remote Valve 4
A025	**X309**	El.Hydraulic Remote Valve 5
A076	**X698**	Mid Mount El.Hydraulic Remote Valve 2
A077	**X699**	Mid Mount El.Hydraulic Remote Valve 3
A078	**X700**	Mid Mount El.Hydraulic Remote Valve 4
A079	**X697**	Mid Mount El.Hydraulic Remote Valve 1
K020	**X074**	El.Hydraulic Remote Lock Relay
Additional Connectors: **X020**, **X304**, **X732**		

Wire Colour Codes

B	Black	S	Slate	G	Green	P	Purple
N	Brown	R	Red	LG	Light Green	K	Pink
LN	Light Brown	O	Orange	U	Blue	W	White
L	Lilac	Y	Yellow	TQ	Turquoise		

https://tractormanualz.com/

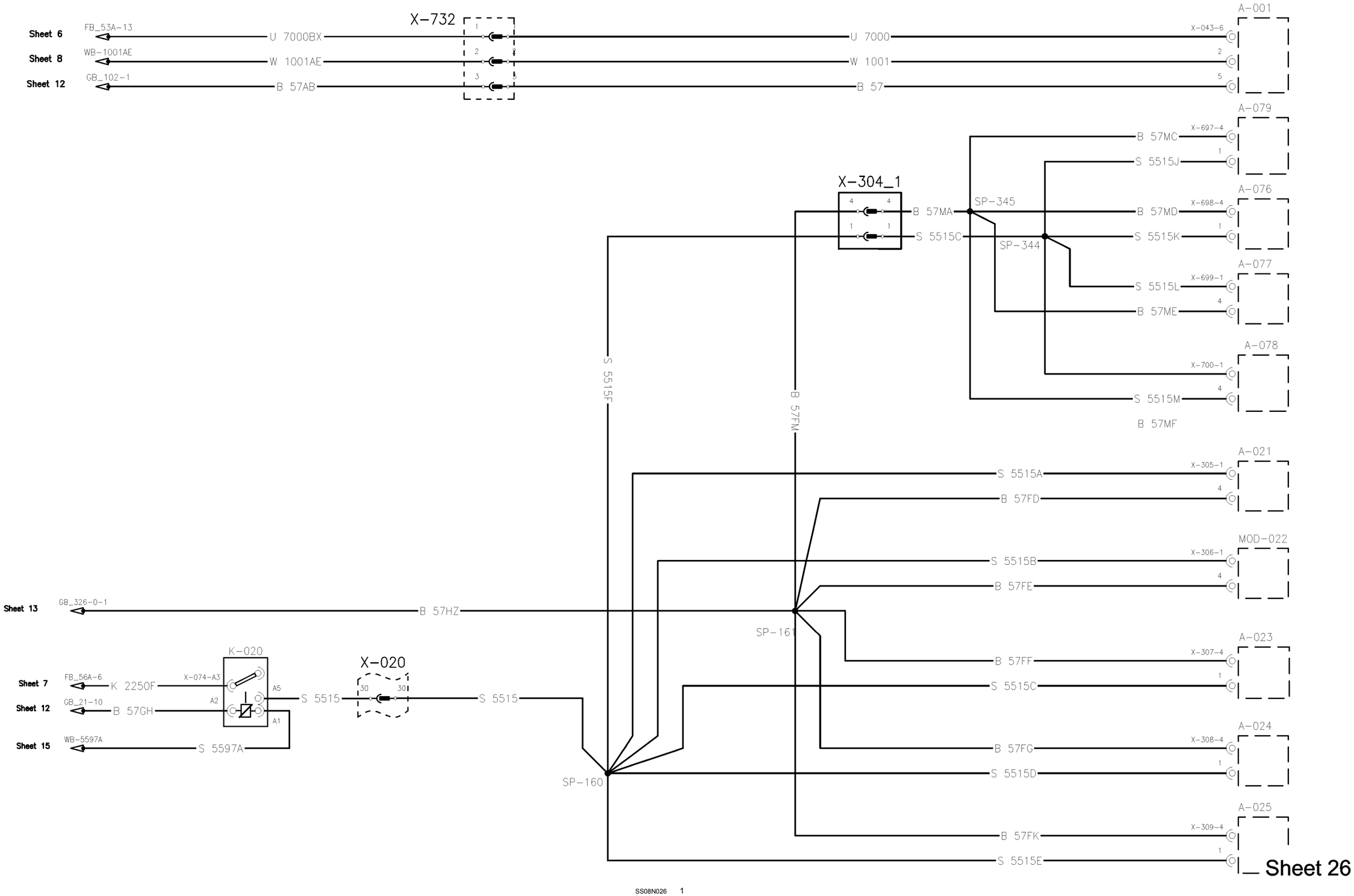

https://tractormanualz.com/

Wiring harness - Electrical schematic frame 27 Heating (Climate Control Auto)

Component	Connector	Description
A006	**X754**	Blower Motor Treiber
A017	**X755**	Air Condition Control Unit
B050	**X754**	Temperature Outside
B051	**X754**	Temperature Cabin
B053	**X753**	Temperature Outlet Sensor
B054	**X753**	Temperature Evaporator Sensor
K006	**X035**	Blower Motor
K019	**X074**	Air Condition Clutch Relay
M011	**X754**	Blower Motor
R003	-	Resistor SJ5
R004	-	Resistor SJ4
R006	-	Resistor SJ6
R030	**X751**	Potentiometer Temperature Adjustment
S015	**X750**	Heater Blower Speed Switch ATC
S016	**X752**	Air Conditioning Mode Switch ATC
S017	**X225**	Air Condition Pressure Switch
S061	**X753**	Low Pressure Switch
Y052	**X753**	Heating Valve
Y082	**X226**	Air Condition Clutch
Z001	**X754**	Blower Assembly
Z069	**X753**	Air Condition Assembly
Additional Connectors: **X024**, **X694**, **X695**		

Wire Colour Codes

B	Black	S	Slate	G	Green	P	Purple
N	Brown	R	Red	LG	Light Green	K	Pink
LN	Light Brown	O	Orange	U	Blue	W	White
L	Lilac	Y	Yellow	TQ	Turquoise		

https://tractormanualz.com/

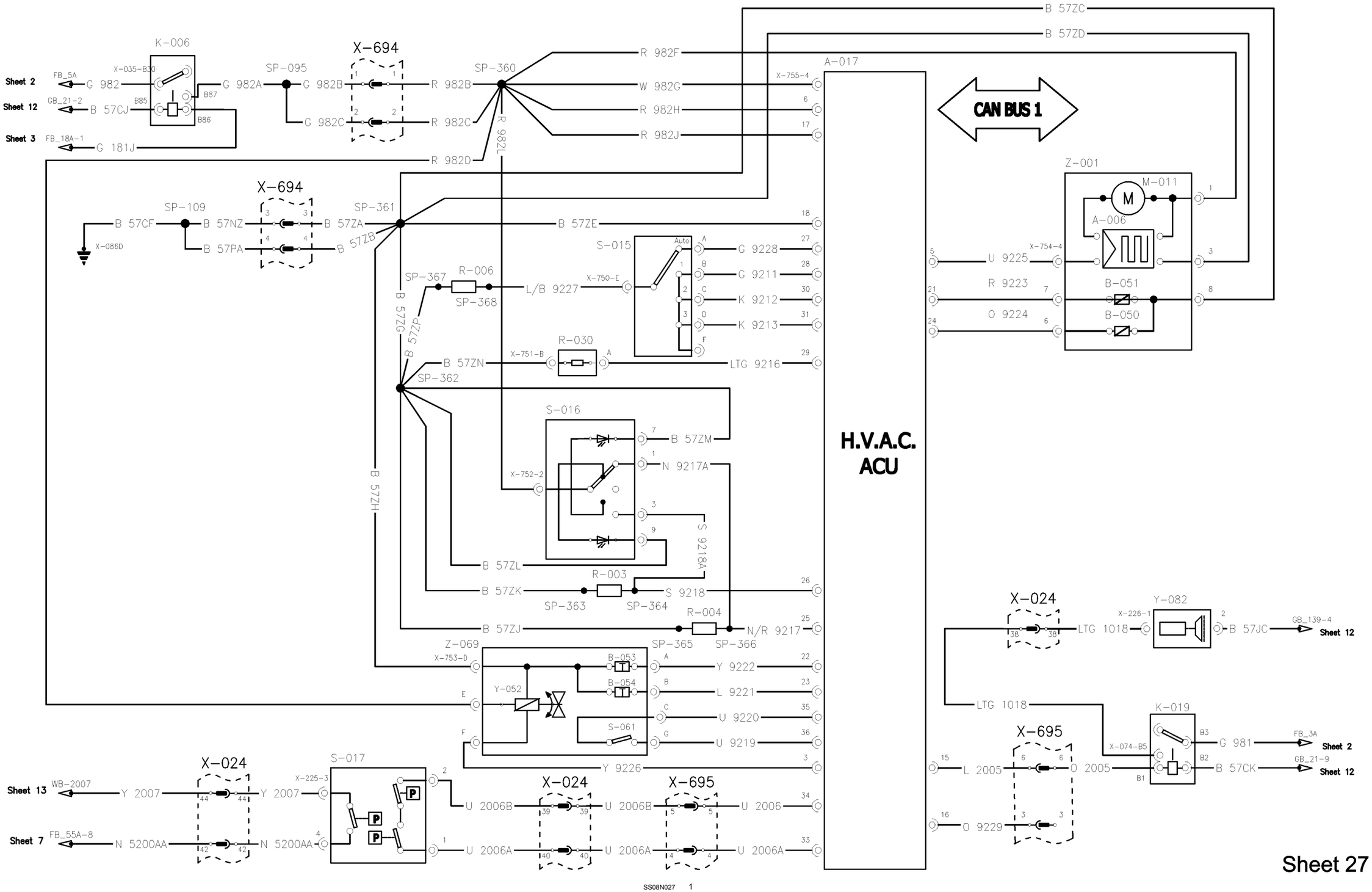

https://tractormanualz.com/

Wiring harness - Electrical schematic frame 28 Heating (Climate Control Manual)

Component	Connector	Description
A066	**X094**	Central Control Unit
K019	**X074**	Air Condition Clutch Relay
M001	**X759**	Blower Motor H.V.A.C System manual
S013	**X758**	Blower Speed Switch HVAC System manual
S014	**X757**	Operating Mode Switch H.V.A.C System manual
S017	**X225**	Air Condition Pressure Switch
S018	**X756**	Low Pressure Switch H.V.A.C System manual
Y082	**X226**	Air Condition Clutch
-	**X086D**	Earth Header 1 to SP109
Additional Connectors: **X024**, **X694**, **X695**		

Wire Colour Codes

B	Black	S	Slate	G	Green	P	Purple
N	Brown	R	Red	LG	Light Green	K	Pink
LN	Light Brown	O	Orange	U	Blue	W	White
L	Lilac	Y	Yellow	TQ	Turquoise		

https://tractormanualz.com/

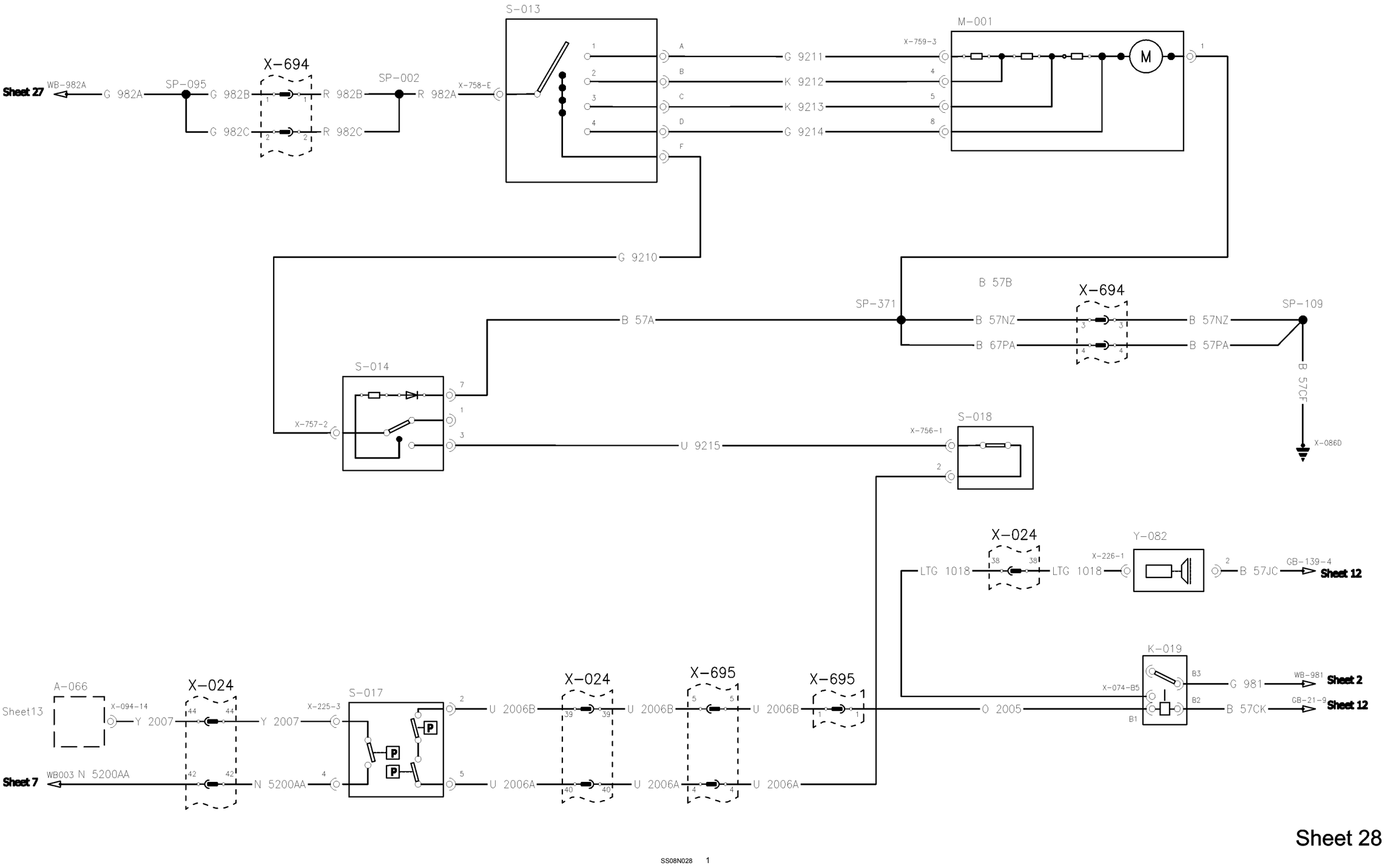

Sheet 28

SS08N028 1

https://tractormanualz.com/

Wiring harness - Electrical schematic frame 29 Heated Mirrors

Component	Connector	Description
A040	**X167**	Mirror Control
K022	**X032**	Heated Mirror Timer Relay
S019	**X611**	Heated Mirror Switch
Z038	**X169**	Electric Mirror Right Hand
Z039	**X166**	Electric Mirror Left Hand
-	**X086C**	Earth Header 1 to SP089
Additional Connectors: **X106**		

Wire Colour Codes

B	Black	S	Slate	G	Green	P	Purple
N	Brown	R	Red	LG	Light Green	K	Pink
LN	Light Brown	O	Orange	U	Blue	W	White
L	Lilac	Y	Yellow	TQ	Turquoise		

https://tractormanualz.com/

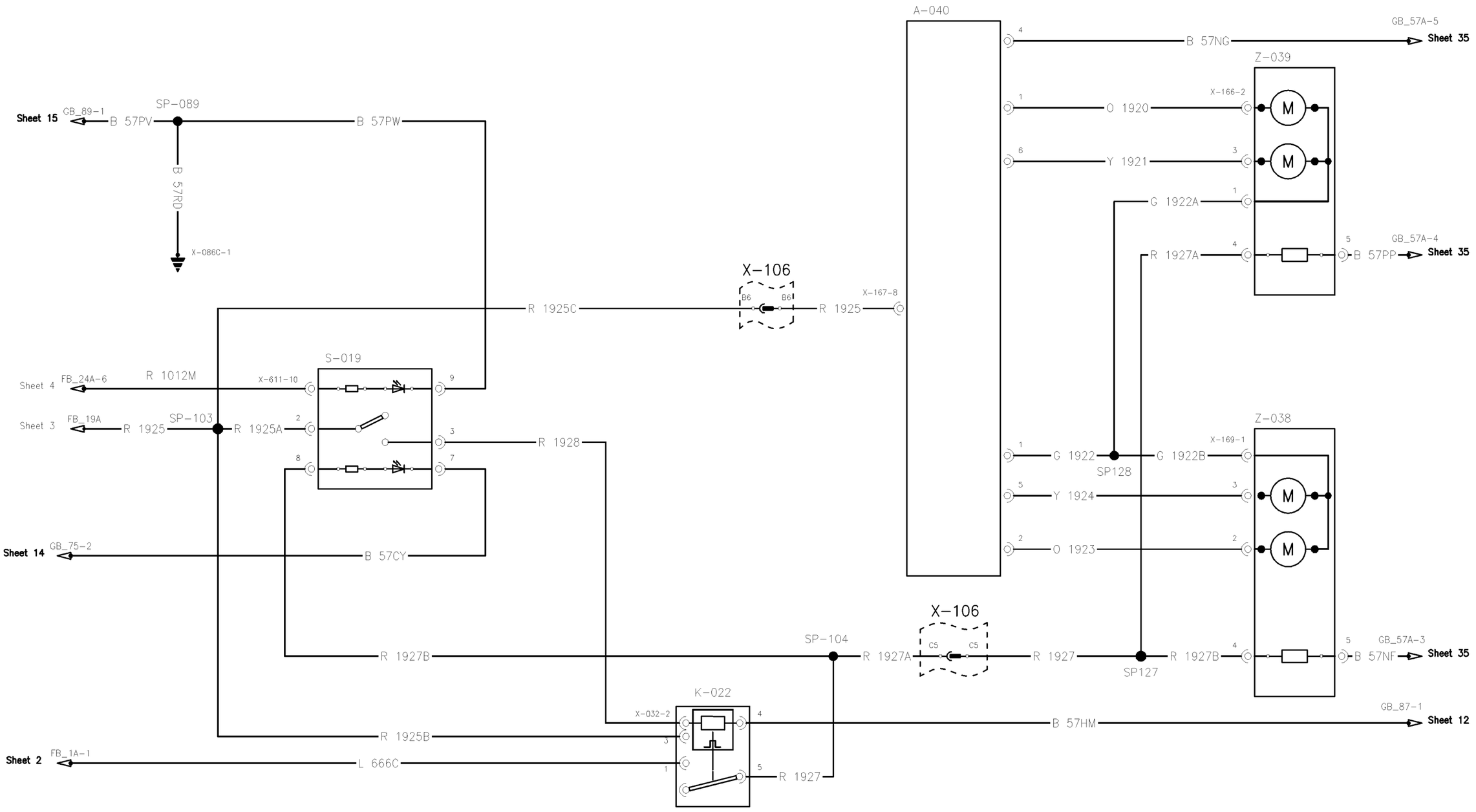

Sheet 29

SS08N029 1

https://tractormanualz.com/

Wiring harness - Electrical schematic frame 30 Heating (Heated Screen)

Component	Connector	Description
K044	**X764**	Front Screen Heater Relay
K045	**X764**	Rear Screen Heater Relay
MF7	**X761**	Supply heated windscreen front
MF8	**X761**	Supply heated screen rear
R049	**X800**, **X801**	Front Screen Heater A
R050	**X802**, **X803**	Front Screen Heater B
R051	**X769**	Rear Screen Heater
S071	**X766**	Screen Heater Switch
Z002	**X761**	Maxi Fuseholder
-	**X768**	Main Earth Point to SP376
-	**X770**	Earth Connector to SP375
Additional Connectors: **X683A**, **X767**		

Wire Colour Codes

B	Black	S	Slate	G	Green	P	Purple
N	Brown	R	Red	LG	Light Green	K	Pink
LN	Light Brown	O	Orange	U	Blue	W	White
L	Lilac	Y	Yellow	TQ	Turquoise		

https://tractormanualz.com/

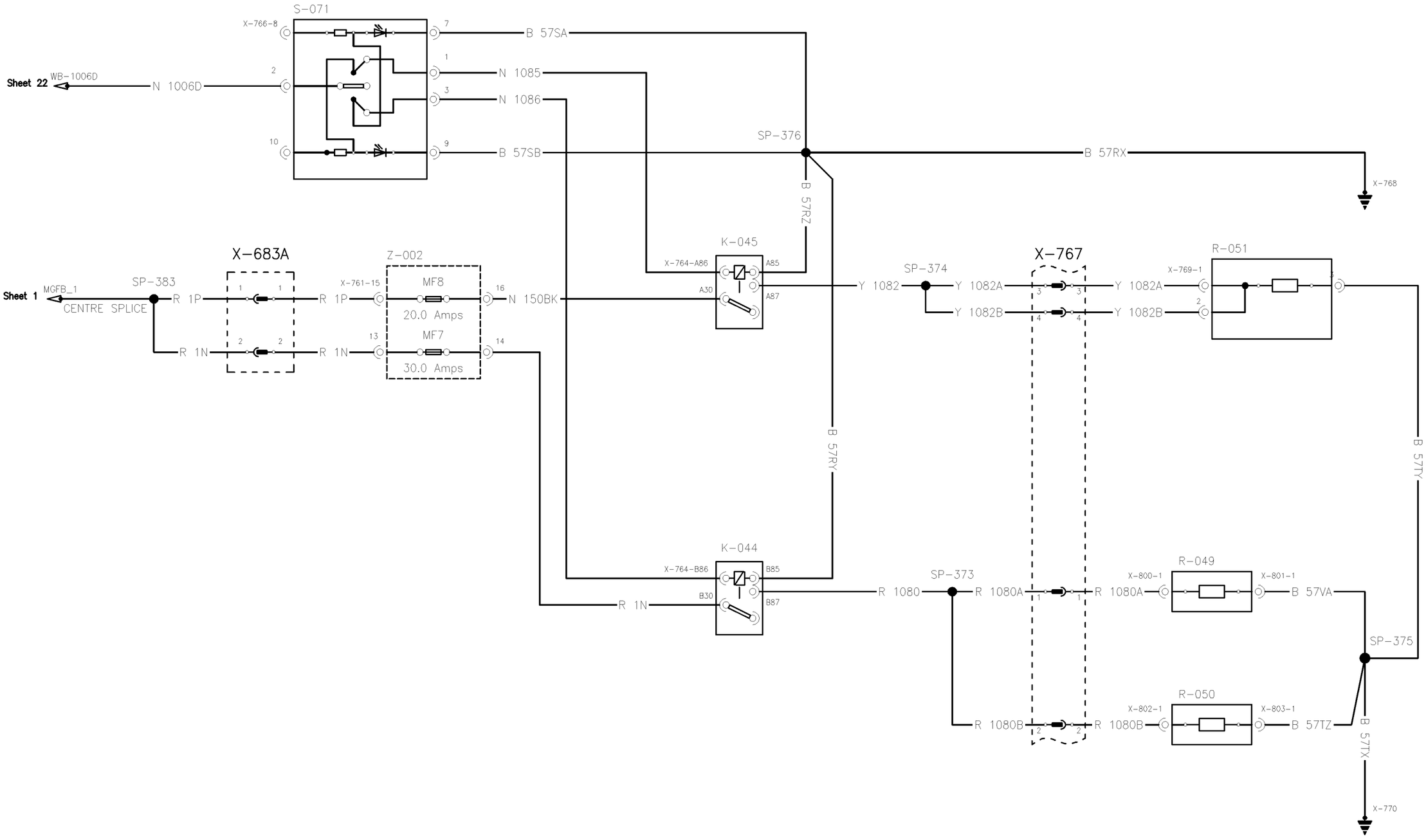

Sheet 30

SS08N030 1

https://tractormanualz.com/

Wiring harness - Electrical schematic frame 31 Cigar Lighter (Implement Sockets)

Component	Connector	Description
J001	**X116A**, **X116B**	Rear Power Socket Implement
J002	**X115A**, **X115B**	30Amp Power Socket
J006	**X132**	8 Amp Socket
J007	**X130**, **X131**	Cigar Lighter
J008	**X441**, **X442**	Power Studs
J009	**X230**	DIA Engine Inline
-	**X032B**	Earth Header 2
-	**X086A**	Earth Header 1 to SP082
Additional Connectors: **X024**, **X115A**, **X115B**, **X116A**, **X116B**, **X117**		

Wire Colour Codes

B	Black	S	Slate	G	Green	P	Purple
N	Brown	R	Red	LG	Light Green	K	Pink
LN	Light Brown	O	Orange	U	Blue	W	White
L	Lilac	Y	Yellow	TQ	Turquoise		

https://tractormanualz.com/

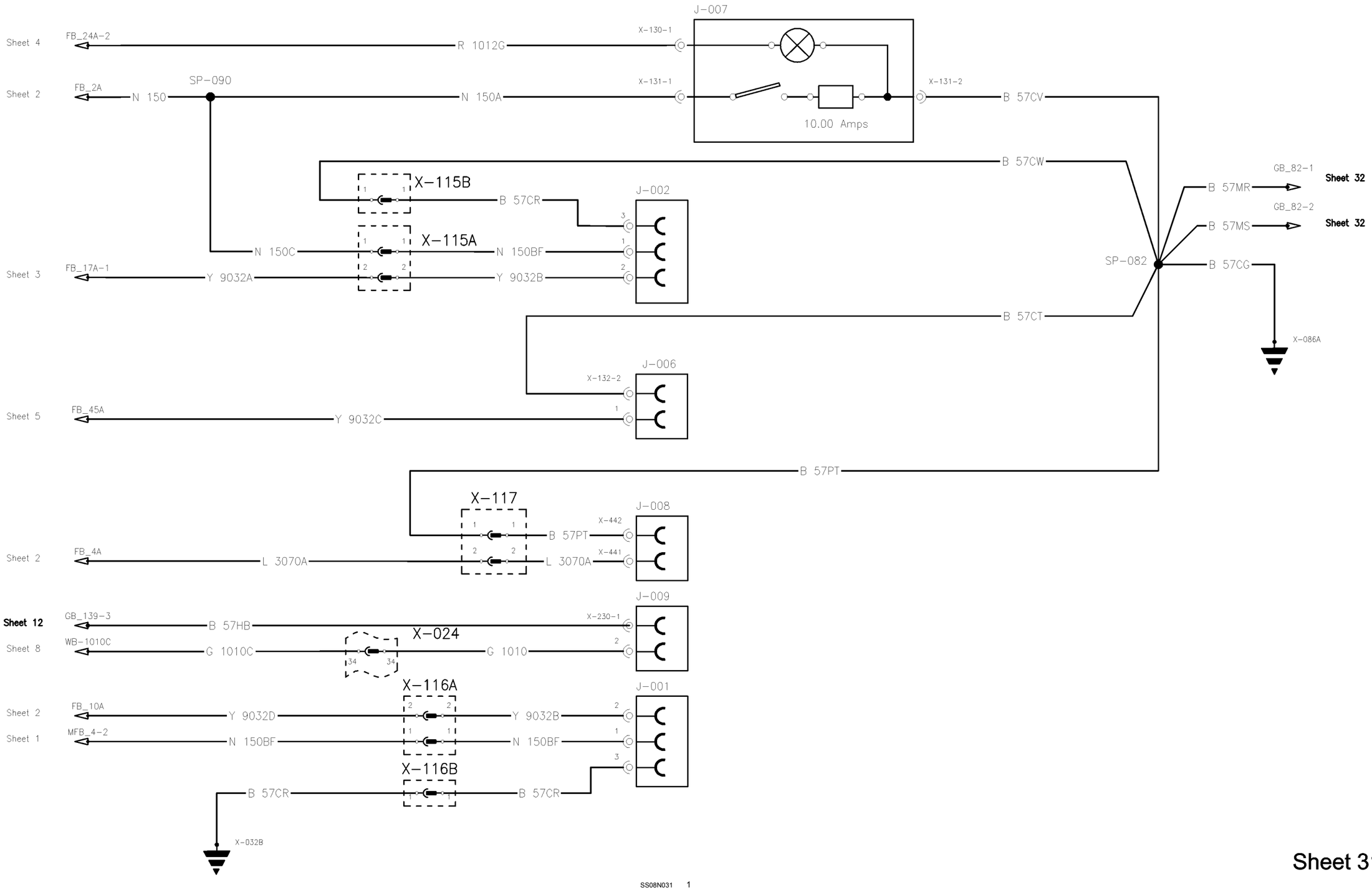

Sheet 31

https://tractormanualz.com/

Wiring harness - Electrical schematic frame 32 Lighting

Component	Connector	Description
A062	**X053**	Flasher Unit
E011	**X689**	Extremity Light Right Hand
E012	**X688**	Extremity Light Left Hand
K004	**X034**	Lights Relay
S021	**X004**	Main Light Switch
S046	**X434**	Hazard Switch
Additional Connectors: **X007**		

Wire Colour Codes

B	Black	S	Slate	G	Green	P	Purple
N	Brown	R	Red	LG	Light Green	K	Pink
LN	Light Brown	O	Orange	U	Blue	W	White
L	Lilac	Y	Yellow	TQ	Turquoise		

https://tractormanualz.com/

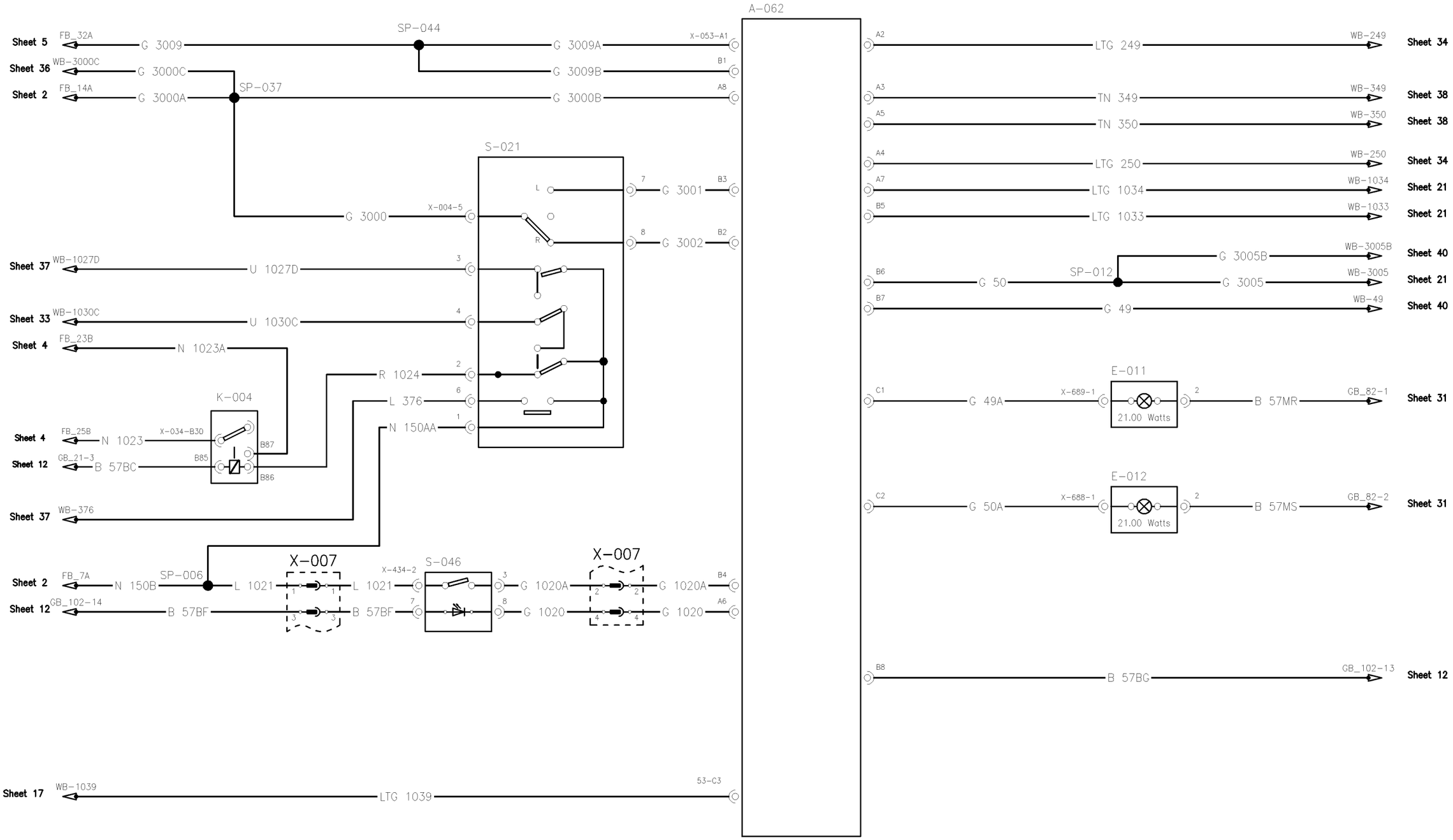

Sheet 32

SS08N032 1

https://tractormanualz.com/

Wiring harness - Electrical schematic frame 33 Lighting Auxiliary (Worklamps/Beacons)

Component	Connector	Description
A068	**X168**	Worklamps Control Unit
E029	**X197**	Worklamp Roof Front Left Hand 2
E030	**X196**	Worklamp Grabrail Left Hand
E031	**X182**	Worklamp Left Hand Rear
E032	**X173**	Worklamp Rear Right Hand
E033	**X165**	Worklamp Roof Front Left Hand 2
E034	**X164**	Worklamp Grabrail Right Hand Front
E035	**X185**	Rotating Beacon Left Hand
E036	**X170**	Rotating Beacon Right Hand
K014	**X037**	Get U Home
V001	**X076**	Get U Home Diode
V002	**X076**	Get U Home Diode
V003	**X076**	Get U Home Diode
V004	**X076**	Dipped Beam Headlamps Diode
V010	**X076**	Main Beam Headlamps Diode
Z006	**X076**	Diode Block
-	**X151**	Roof Earth to SP114
Additional Connectors: **X106**		

Wire Colour Codes

B	Black	S	Slate	G	Green	P	Purple
N	Brown	R	Red	LG	Light Green	K	Pink
LN	Light Brown	O	Orange	U	Blue	W	White
L	Lilac	Y	Yellow	TQ	Turquoise		

https://tractormanualz.com/

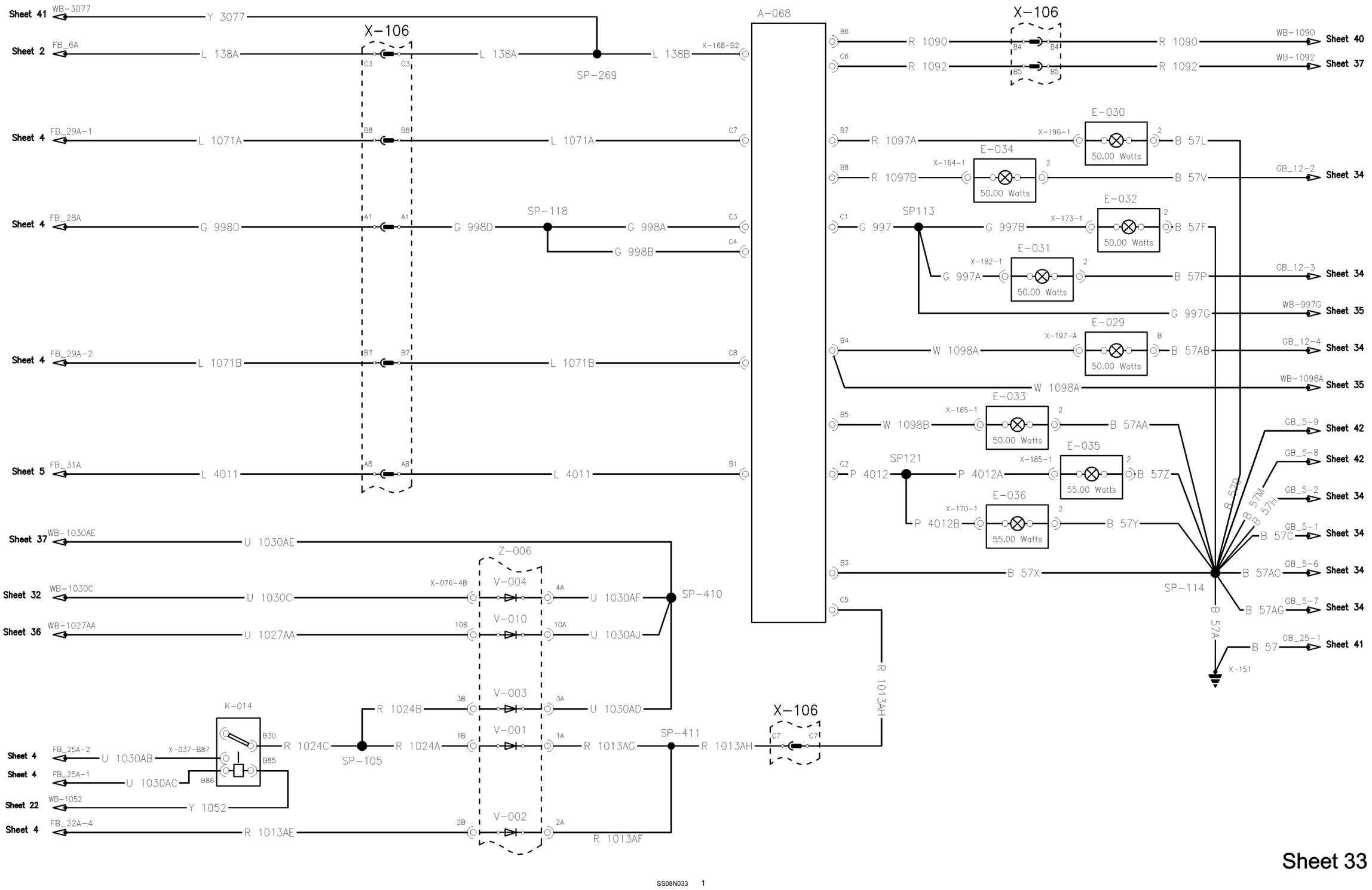

Sheet 33

https://tractormanualz.com/

Wiring harness - Electrical schematic frame 34 Lighting (Side, Console & Licence Plate Lamps)

Component	Connector	Description
E009	**X156**	Console Lamp Right Hand
E010	**X163**	Grabrail Side Lamp RH / SM Vehicle RF
E014	**X195**	Side Lamp Grabrail LH / SM Vehicle LF
E016	**X180**	License Plate Left Hand
E017	**X176**	License Plate Right Hand
-	**X151**	Roof Earth to SP124
Additional Connectors: **X106**		

Wire Colour Codes

B	Black	S	Slate	G	Green	P	Purple
N	Brown	R	Red	LG	Light Green	K	Pink
LN	Light Brown	O	Orange	U	Blue	W	White
L	Lilac	Y	Yellow	TQ	Turquoise		

https://tractormanualz.com/

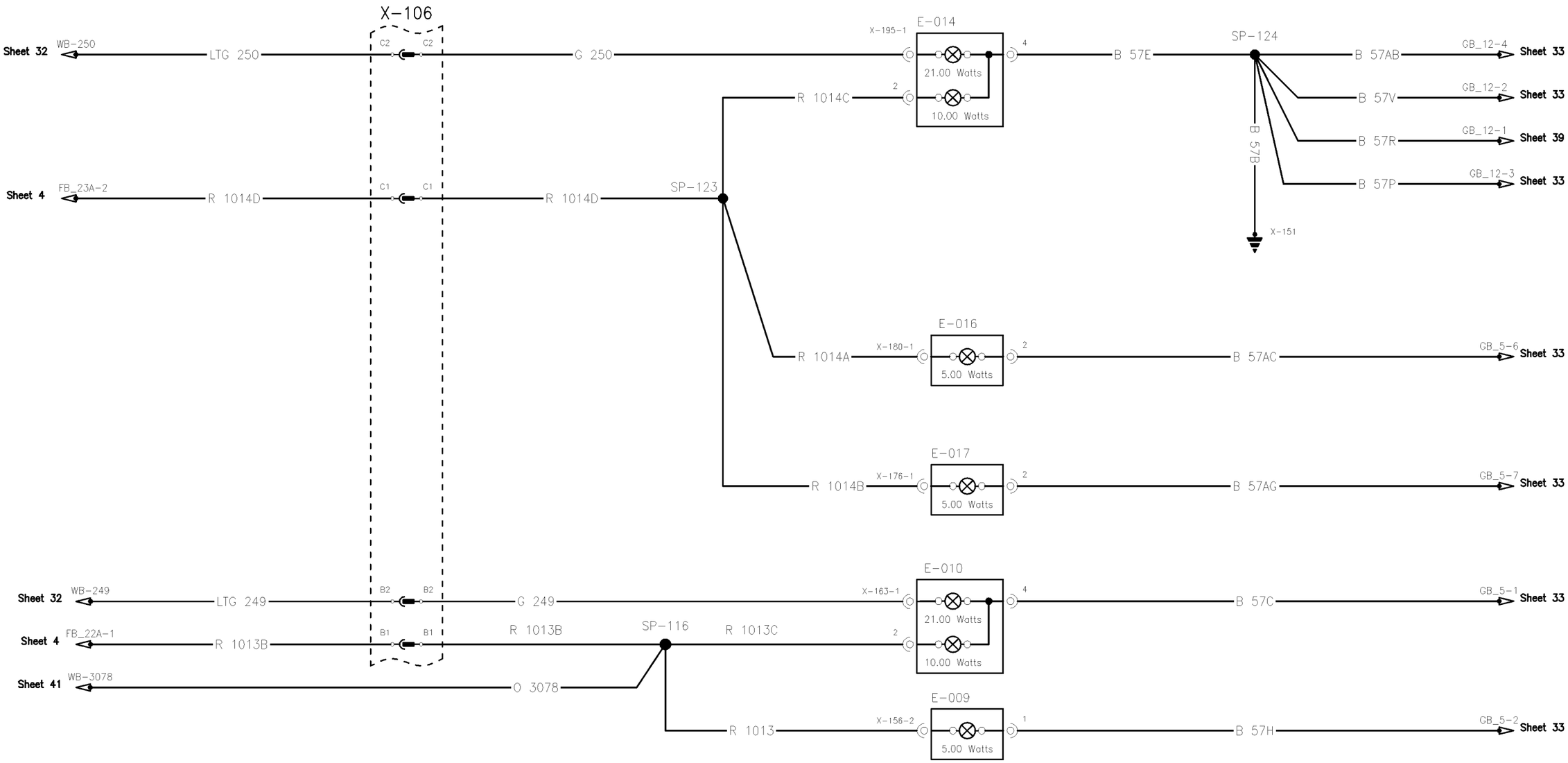

Sheet 34

SS08N034 1

https://tractormanualz.com/

Wiring harness - Electrical schematic frame 37 Lighting (Headlamps / Worklamps Hood)

Component	Connector	Description
E002	**X818**	Headlamp 2 Left Hand Grabrail
E007	**X336**	Headlamp Left Hand
E008	**X333**	Headlamp Right Hand
E013	**X819**	Headlamp 1 Right Hand Grabrail
E026	**X332**	Corner Lamp Right Hand
E027	**X337**	Corner Lamp Left Hand
E041	**X331**	Worklamp Right Hand
E042	X338	Worklamp Left Hand
H002	**X334**, **X335**	Horn
K007	**X036**	Dipped Beam Headlamps
K009	**X036**	Main Beam Headlamps
K015	**X074**	Front Worklamps Hood
S100	**X816**	High Mount Headlamp Switch
Additional Connectors: **X026**, **X107**, **X107_A**, **X108**, **X108_A**, **X220**, **X555**, **X555A**, **X555C**		

Wire Colour Codes

B	Black	S	Slate	G	Green	P	Purple
N	Brown	R	Red	LG	Light Green	K	Pink
LN	Light Brown	O	Orange	U	Blue	W	White
L	Lilac	Y	Yellow	TQ	Turquoise		

https://tractormanualz.com/

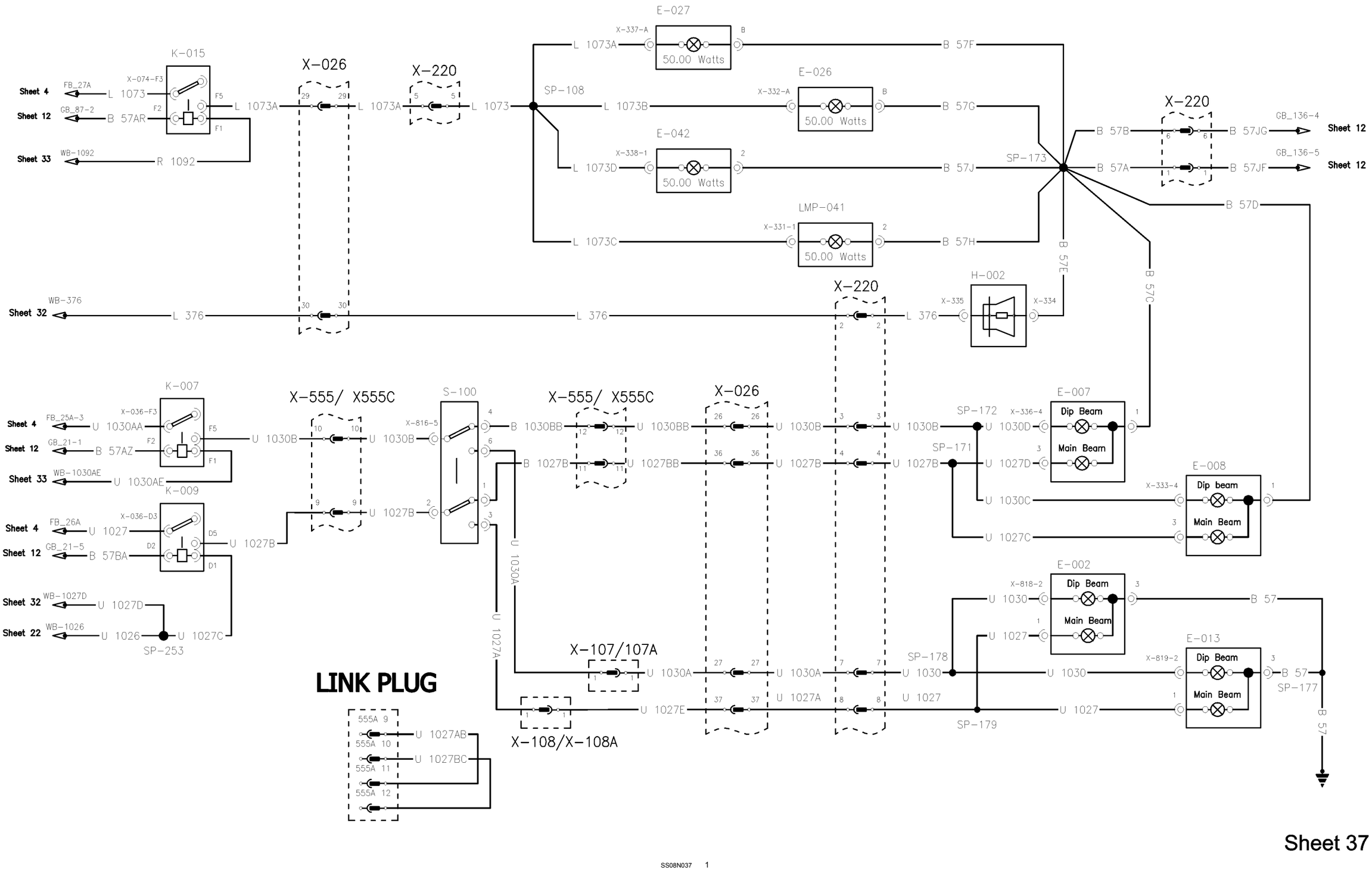

SS08N037 1

Sheet 37

https://tractormanualz.com/

Wiring harness - Electrical schematic frame 38 Lighting (Trailer)

Component	Connector	Description
E023	X444	Trailer Lamps
Additional Connectors: **X020**, **X253**		

Wire Colour Codes

B	Black	S	Slate	G	Green	P	Purple
N	Brown	R	Red	LG	Light Green	K	Pink
LN	Light Brown	O	Orange	U	Blue	W	White
L	Lilac	Y	Yellow	TQ	Turquoise		

https://tractormanualz.com/

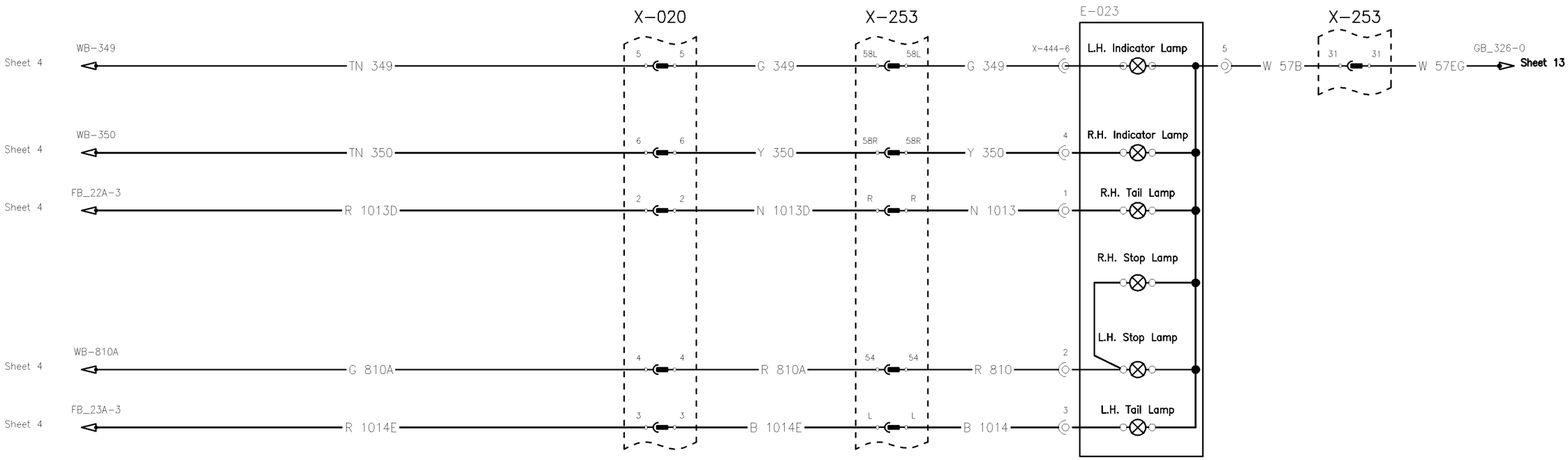

Sheet 38

SS08N038 1

https://tractormanualz.com/

Wiring harness - Electrical schematic frame 39 Lighting (Interior Lights)

Component	Connector	Description
E004	**X193**	Puddle Lamp Left Hand
E006	**X190**, **X191**, **X192**	Interior Lamp
S041	X154	Door Switch Right Hand
S042	**X186**	Door Switch Left Hand
Additional Connectors: **X106**		

Wire Colour Codes

B	Black	S	Slate	G	Green	P	Purple
N	Brown	R	Red	LG	Light Green	K	Pink
LN	Light Brown	O	Orange	U	Blue	W	White
L	Lilac	Y	Yellow	TQ	Turquoise		

https://tractormanualz.com/

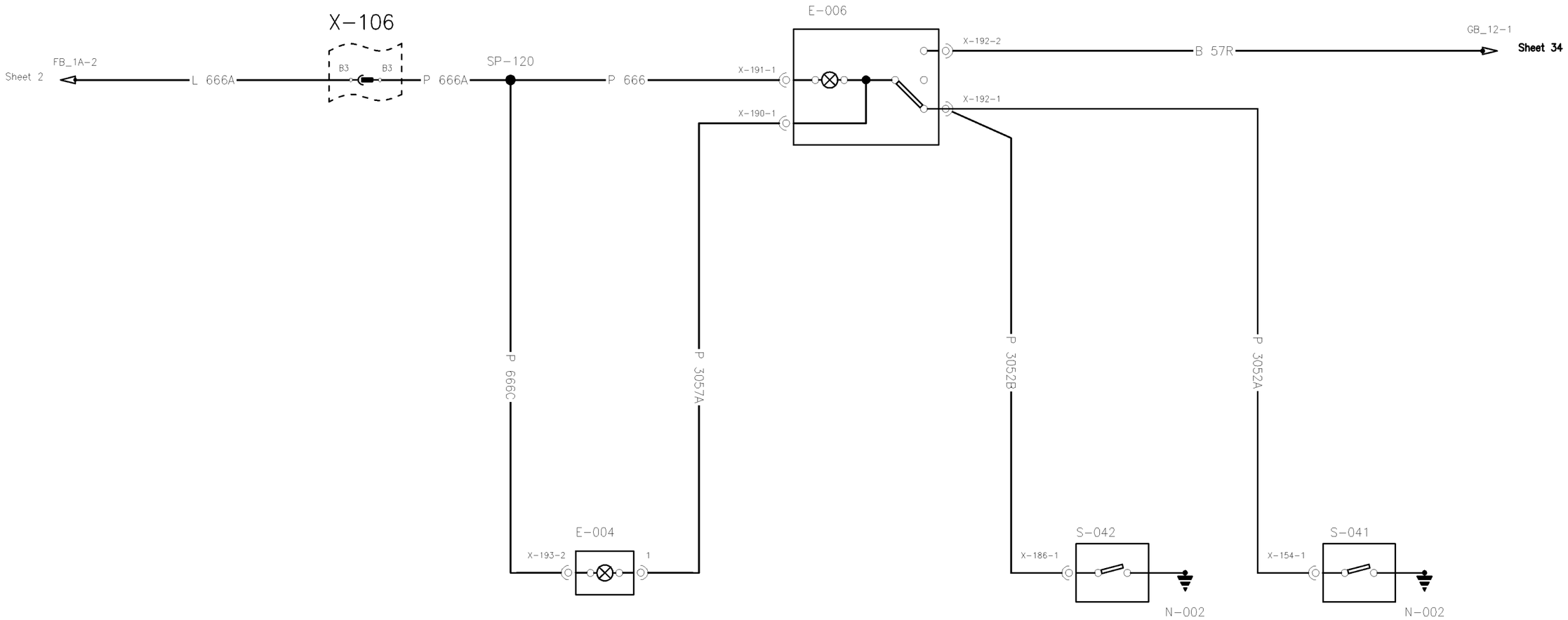

Sheet 39

SS08N039 1

https://tractormanualz.com/

Wiring harness - Electrical schematic frame 40 Lighting (Stop / Tail Lamps & Worklamps)

Component	Connector	Description
E018	**X409**	Stop & Tail Lamp Right Hand
E019	**X409**	Stop & Tail Lamp Left Hand
E024	**X403**	Worklamp C Pillar Left Hand
E025	**X403**	Worklamp C Pillar Right Hand
E055	**X404**, **X405**	License Lamp Right Hand
E057	**X404**, **X405**	License Lamp Left Hand
K008	**X036**	Stop Lamps Relay
K016	**X074**	Rear Worklamps C Pillar Relay
S043	**X013**	Stop Lamp switch Left Hand
S044	**X014**	Stop Lamp Switch Right Hand
V005	**X076**	Brake Light Diode
V006	**X076**	Brake Light Diode
Z006	**X076**	Diode Block
Additional Connectors: **X111**, **X126**		

Wire Colour Codes

B	Black	S	Slate	G	Green	P	Purple
N	Brown	R	Red	LG	Light Green	K	Pink
LN	Light Brown	O	Orange	U	Blue	W	White
L	Lilac	Y	Yellow	TQ	Turquoise		

https://tractormanualz.com/

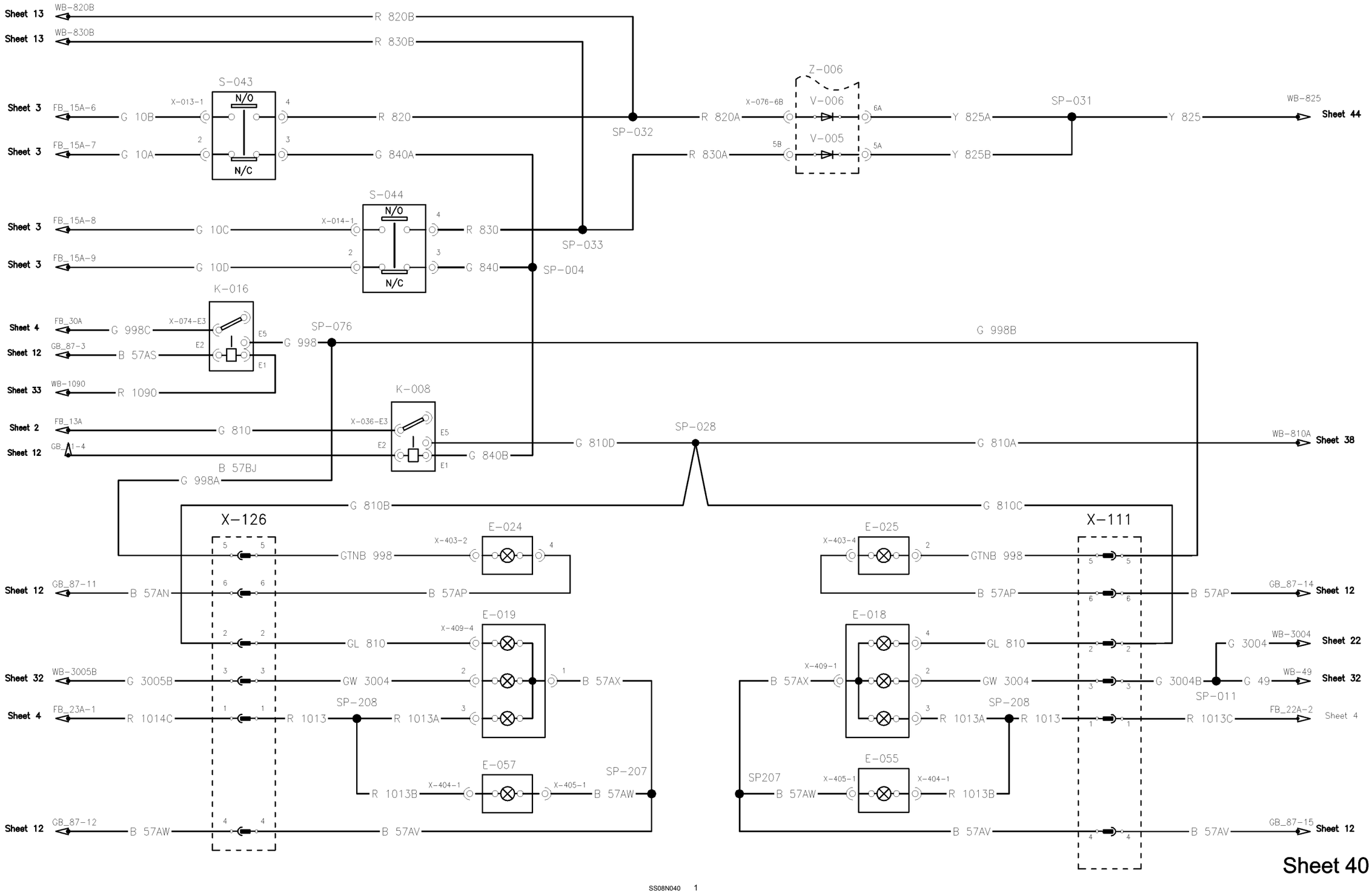

SS08N040 1

https://tractormanualz.com/

Wiring harness - Electrical schematic frame 41 I.C.E (Radio)

Component	Connector	Description
A064	**X157**, **X158**	Radio
H003	**X175**	Radio Speaker RHR
H004	X161	Radio Speaker RHF
H005	X194	Radio Speaker LHF
H006	**X181**	Radio Speaker LHR
W001	**X207**	Antenna Plus
Additional Connectors: **X106**		

Wire Colour Codes

B	Black	S	Slate	G	Green	P	Purple
N	Brown	R	Red	LG	Light Green	K	Pink
LN	Light Brown	O	Orange	U	Blue	W	White
L	Lilac	Y	Yellow	TQ	Turquoise		

https://tractormanualz.com/

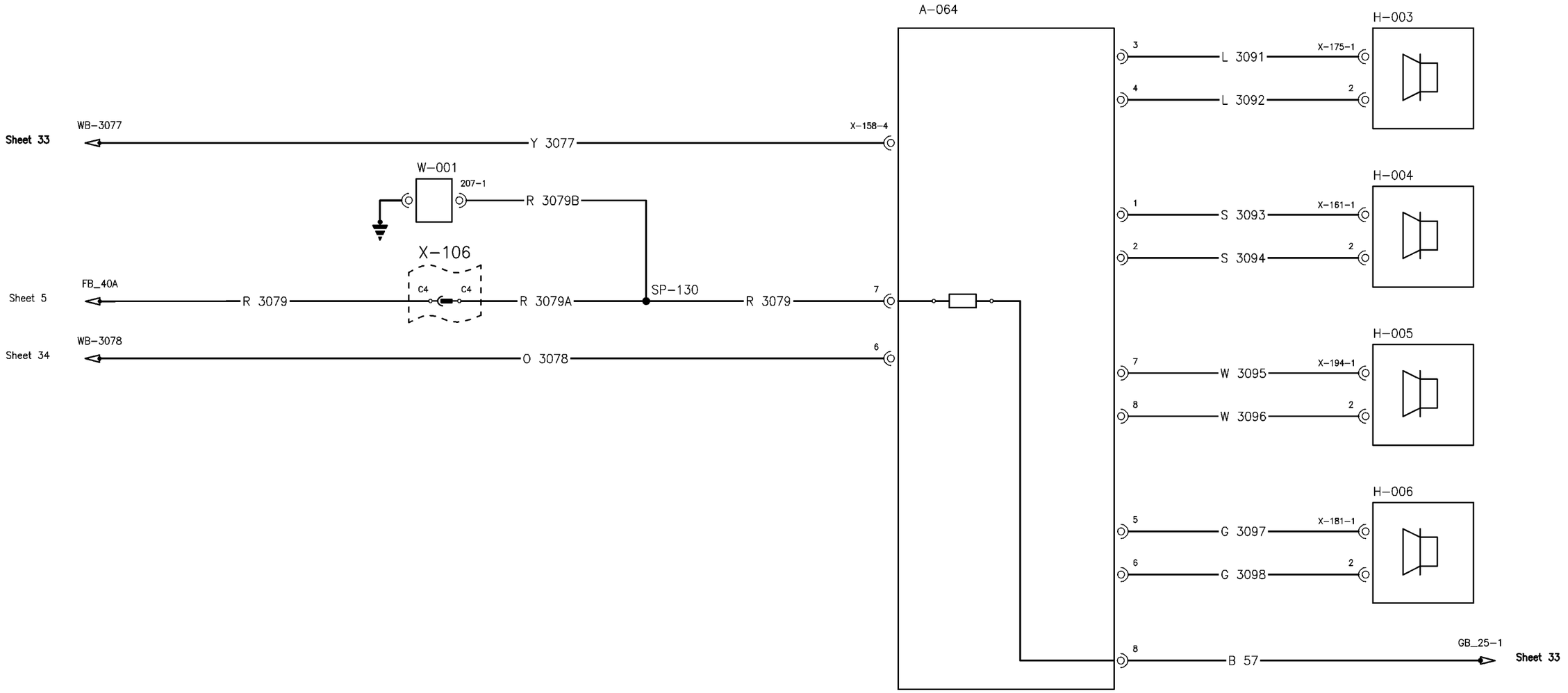

Sheet 41

SS08N041 1

https://tractormanualz.com/

Wiring harness - Electrical schematic frame 42 Washers & Wipers

Component	Connector	Description
K001 & K002	**X033** (1-5)	Wiper Module Front & Rear
K001 & K002	**X033** (6-10)	Wiper Module Front & Rear
M004	**X201**	Wiper Motor Front
M005	**X177**	Wiper Motor Rear
M006	**X125**	Washer Motor Front
M007	**X123**	Washer Motor Rear
S065	**X011**	Front and Rear Wiper Switch
Additional Connectors: **X106**		

Wire Colour Codes

B	Black	S	Slate	G	Green	P	Purple
N	Brown	R	Red	LG	Light Green	K	Pink
LN	Light Brown	O	Orange	U	Blue	W	White
L	Lilac	Y	Yellow	TQ	Turquoise		

https://tractormanualz.com/

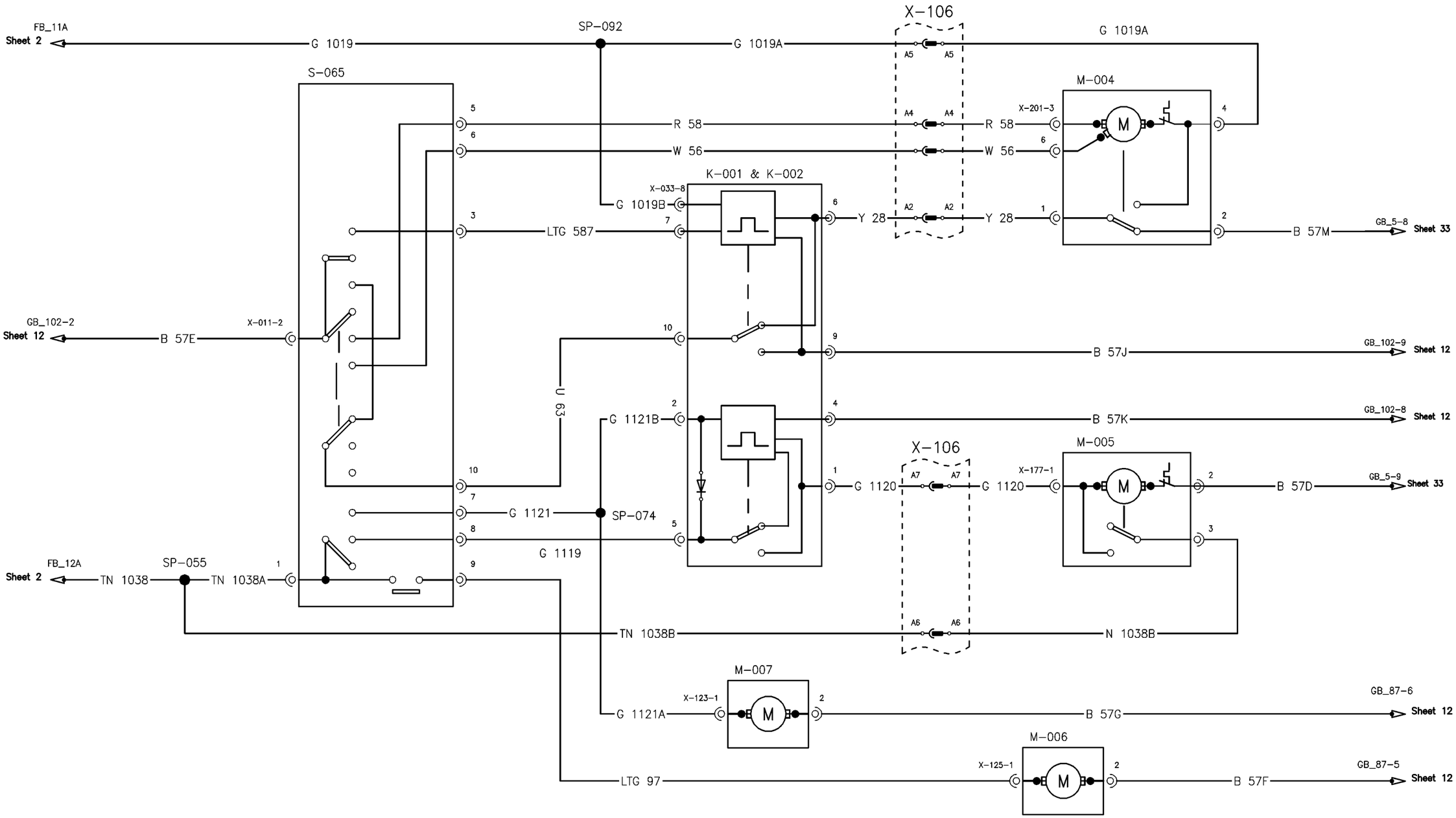

Sheet 42

SS08N042 1

https://tractormanualz.com/

Wiring harness - Electrical schematic frame 43 Colour Display (Instruments)

Component	Connector	Description
A007	**X485**	Colour Display
A042	**X489**	Rear View Camera
A052	**X490**	Encoder & Switches
E003	**X734**	Lamp Feed
-	X488	USB Connector
Additional Connectors: **X615**, **X619**, X736		

Wire Colour Codes							
B	Black	S	Slate	G	Green	P	Purple
N	Brown	R	Red	LG	Light Green	K	Pink
LN	Light Brown	O	Orange	U	Blue	W	White
L	Lilac	Y	Yellow	TQ	Turquoise		

https://tractormanualz.com/

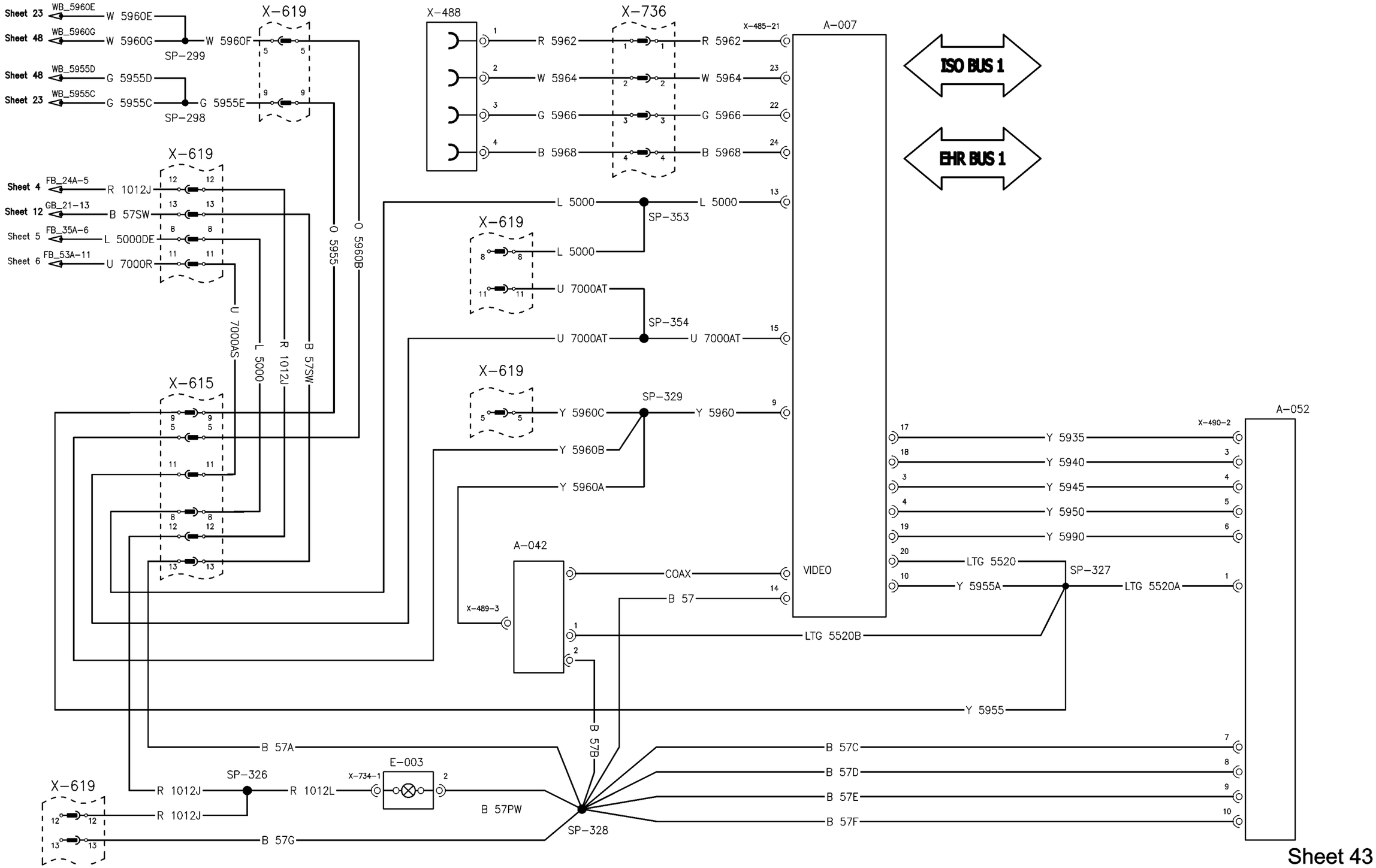

Sheet 43

https://tractormanualz.com/

Wiring harness - Electrical schematic frame 44 Braking (Trailer Brakes)

Component	Connector	Description
B040	**X430**	Air Brake Pressure Sensor
K010	**X036**	Hydraulic Trailer Brake
K012	**X036**	Pneumatic Trailer Brake
S027	**X422**, **X423**	Low Brake Pressure Line Switch 1/ 2
S053	**X426**, **X427**	Low Pump Output Press Switch 1 / 2
Y021	**X429**	Brake De-Icer
Y022	**X431**	Pneumatic Trailer Brake Solenoid
Y023	**X432**	Park Brake Solenoid
Y037	**X424**, **X425**	Hydraulic Trailer Brake Solenoid 1 / 2
Additional Connectors: **X020**, **X254**, **X255**		

Wire Colour Codes

B	Black	S	Slate	G	Green	P	Purple
N	Brown	R	Red	LG	Light Green	K	Pink
LN	Light Brown	O	Orange	U	Blue	W	White
L	Lilac	Y	Yellow	TQ	Turquoise		

https://tractormanualz.com/

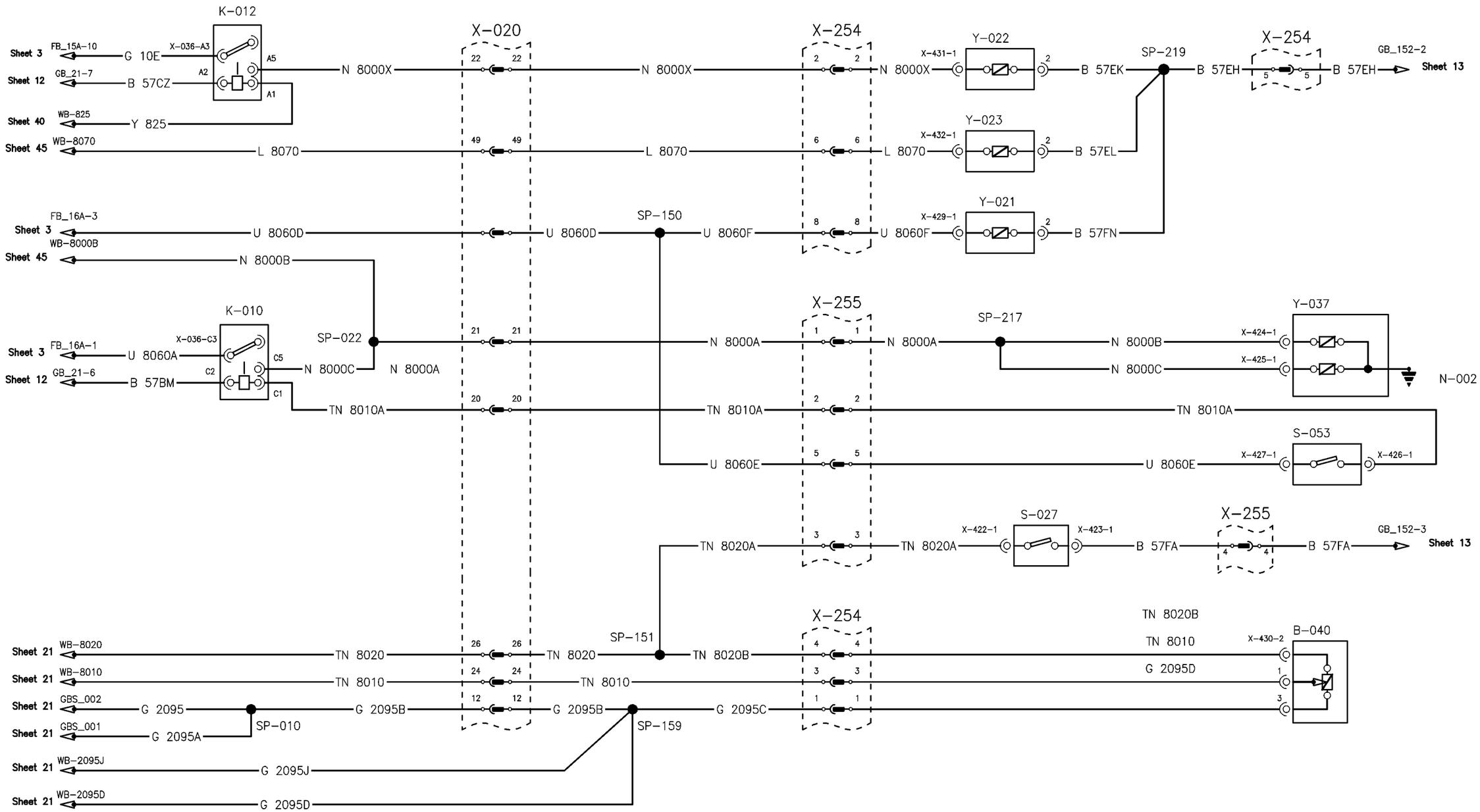

SS08N044 1

Sheet 44

https://tractormanualz.com/

Wiring harness - Electrical schematic frame 45 Braking (Electronic Park Lock)

Component	Connector	Description
A012	**X745**	Electronic Park Brake Interface Conn
K011	**X036**	Electronic Park Brake
S030	**X121**	Hand Brake Switch
Additional Connectors: -		

Wire Colour Codes

B	Black	S	Slate	G	Green	P	Purple
N	Brown	R	Red	LG	Light Green	K	Pink
LN	Light Brown	O	Orange	U	Blue	W	White
L	Lilac	Y	Yellow	TQ	Turquoise		

https://tractormanualz.com/

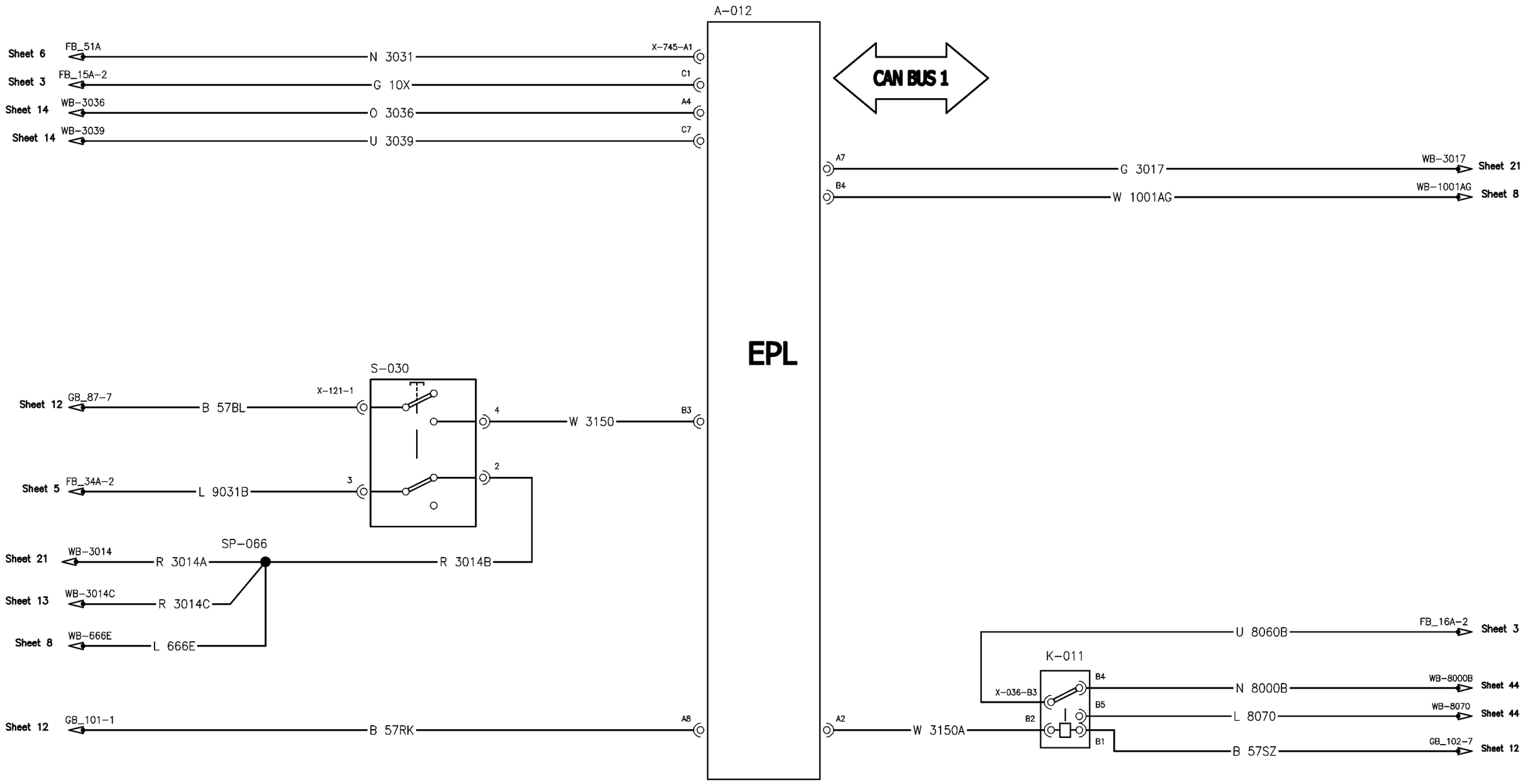

SS08N045 1

https://tractormanualz.com/

Wiring harness - Electrical schematic frame 46 Front Loader Relays

Component	Connector	Description
A066	**X097**	Central Control Unit
K491	X491	Front Loader Relay 1
K492	X492	Front Loader Relay 2
Y010	X822	Loader Valve Option B
Y036	X821	Loader Valve Option A
Additional Connectors: **X024**, **X082**, **X084**, **X211**, **X212**, X493		

Wire Colour Codes

B	Black	S	Slate	G	Green	P	Purple
N	Brown	R	Red	LG	Light Green	K	Pink
LN	Light Brown	O	Orange	U	Blue	W	White
L	Lilac	Y	Yellow	TQ	Turquoise		

https://tractormanualz.com/

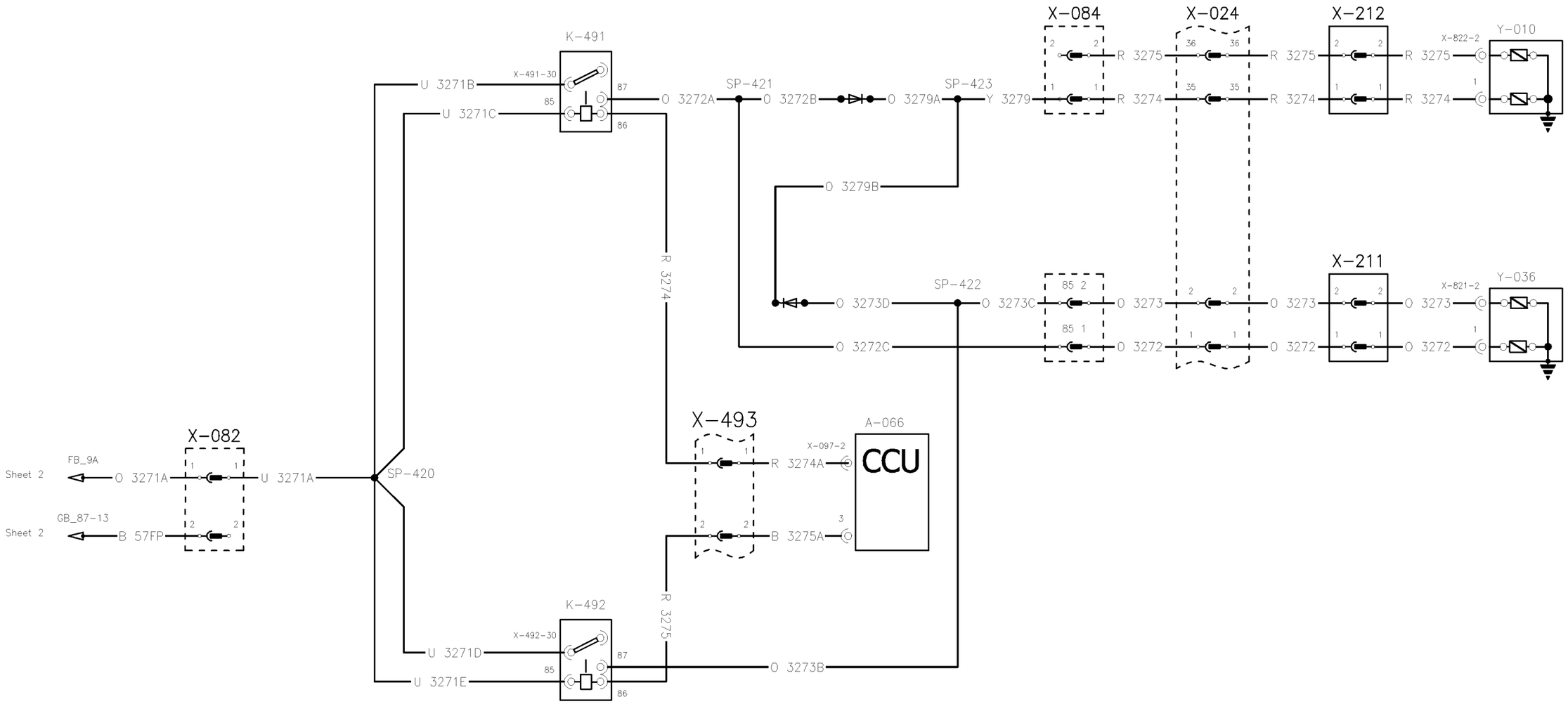

Sheet 46

SS08N046 1

https://tractormanualz.com/

Wiring harness - Electrical schematic frame 47 Isobus (Isobus Power)

Component	Connector	Description
A054	**X616**	Iso Bus Control Unit
J003	**X601**	Iso Implement Socket (Rear)
J004	**X600**	Iso Implement Socket (Front)
K040	**X602**	ISO Relay 1 Rear
K041	**X603**	ISO Relay 2 Rear
K042	**X629**	ISO Relay 1 Front
K043	**X628**	ISO Relay 2 Front
-	**X605**	Earth to SP295
-	**X630**	Earth to SP294
Additional Connectors: **X024**, **X613**, **X614**, **X620**, **X660**		

Wire Colour Codes

B	Black	S	Slate	G	Green	P	Purple
N	Brown	R	Red	LG	Light Green	K	Pink
LN	Light Brown	O	Orange	U	Blue	W	White
L	Lilac	Y	Yellow	TQ	Turquoise		

https://tractormanualz.com/

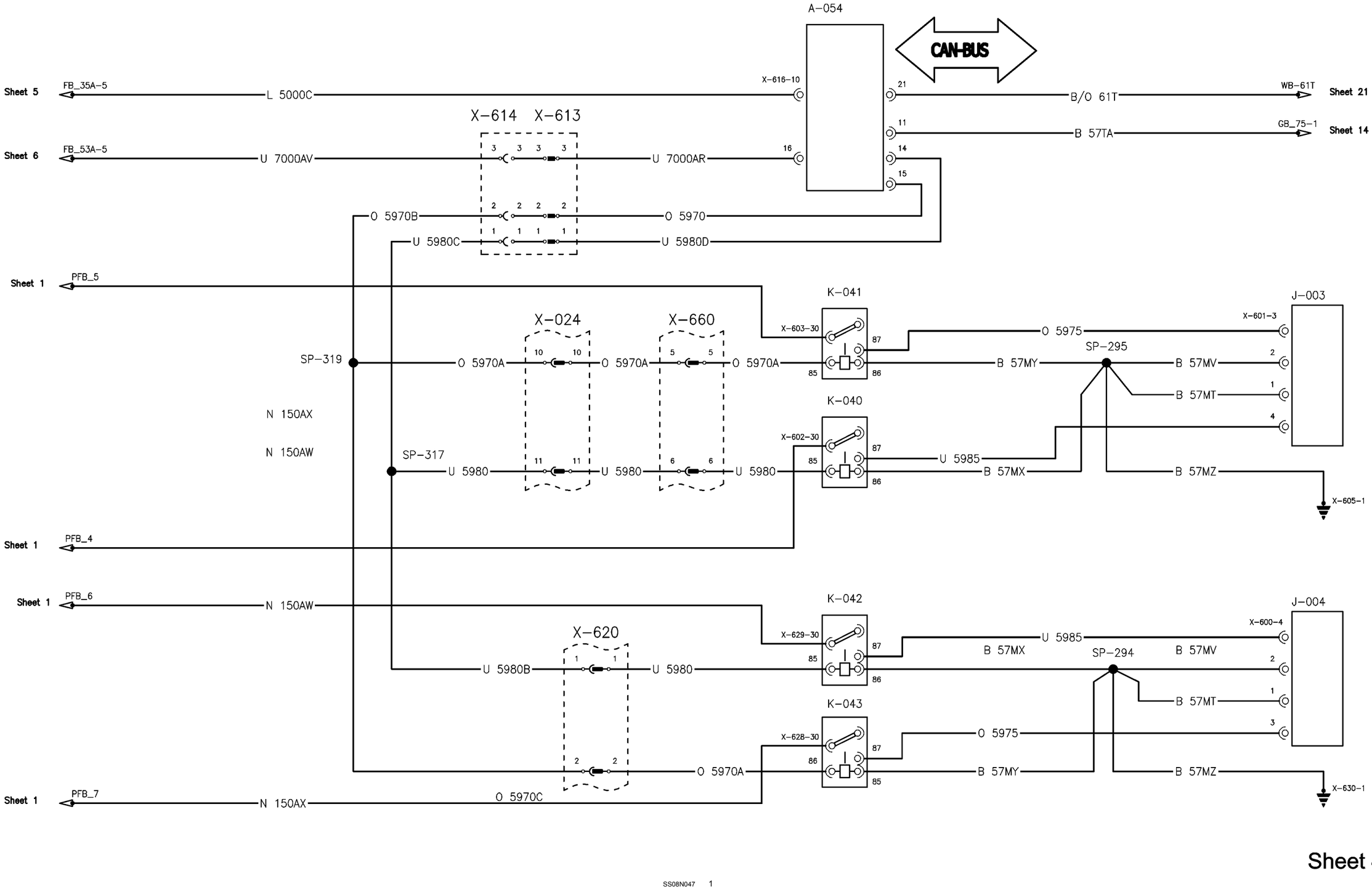

Sheet 47

SS08N047 1

https://tractormanualz.com/

Wiring harness - Electrical schematic frame 48 Diagnostics

Component	Connector	Description
-	**X028**	Diagnostic Connector 2
-	**X030**	Diagnostic Connector 1
-	**X031**	ADIC Diagnostic Connector
Additional Connectors: **X026**		

Wire Colour Codes

B	Black	S	Slate	G	Green	P	Purple
N	Brown	R	Red	LG	Light Green	K	Pink
LN	Light Brown	O	Orange	U	Blue	W	White
L	Lilac	Y	Yellow	TQ	Turquoise		

https://tractormanualz.com/

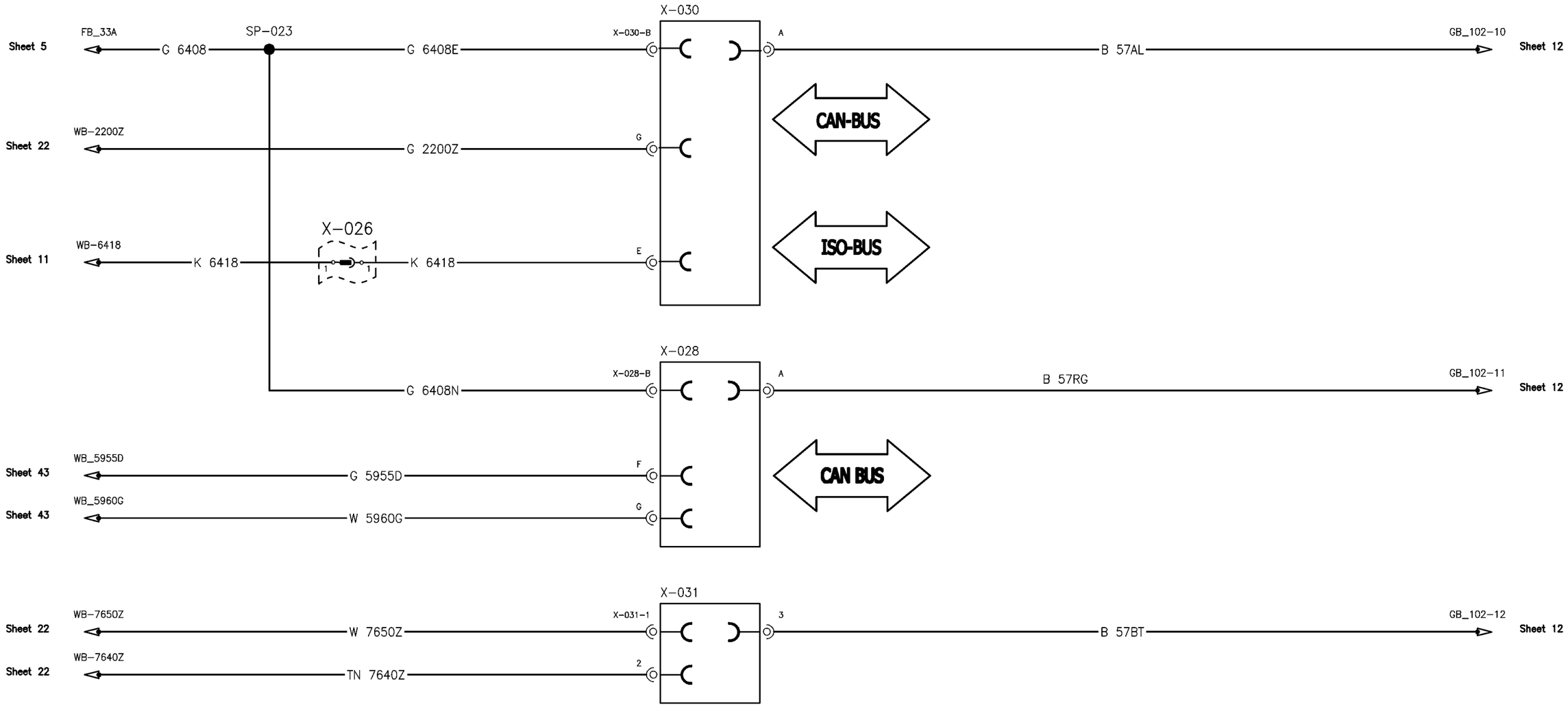

Sheet 48

SS08N048 1

https://tractormanualz.com/

Wiring harness - Electrical schematic frame 49 CAN System (CAN BUS 1)

Component	Connector	Description
A001	X043	NH Display of Gear
A010	**X099**	Auxilary Control Unit
A012	**X745**	Electronic Park Brake Interface Conn
A014	**X008**	Keypad
A017	**X755**	Air Condition Control Unit
A054	**X616**	Iso Bus Control Unit
A057	**X218**	Engine Control Unit
A061	**X621**	Control Unit Fast Steer
A063	**X009**	Instrument Cluster Unit
A066	**X092**	Central Control Unit
A081	**X776**	Armrest Control Unit (GARU)
-	**X030**	Diagnostic Connector 1
Additional Connectors: **X026**, **X080**, **X088**, **X623**, **X695**, **X730**, **X731**		

Wire Colour Codes

B	Black	S	Slate	G	Green	P	Purple
N	Brown	R	Red	LG	Light Green	K	Pink
LN	Light Brown	O	Orange	U	Blue	W	White
L	Lilac	Y	Yellow	TQ	Turquoise		

https://tractormanualz.com/

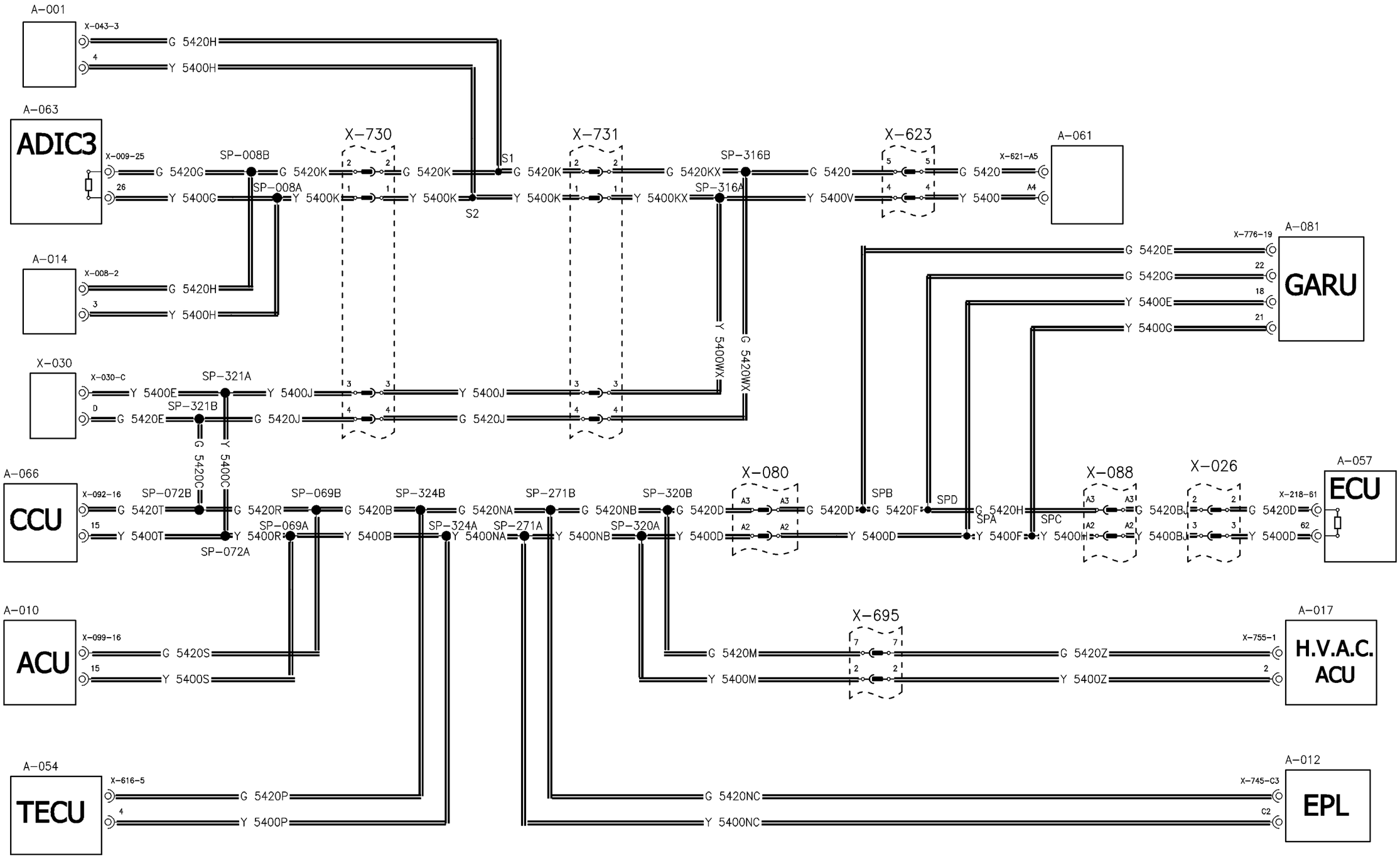

Sheet 49

SS08N049 1

https://tractormanualz.com/

Wiring harness - Electrical schematic frame 50 CAN System (EHR CAN)

Component	Connector	Description
A004	**X716**	Navigation Controller
A007	**X485**	Colour Display
A010	**X099**	Auxiliary Control Unit
A066	**X092**	Central Control Unit
X005	**X719**	GPS Receiver
-	**X028**	Diagnostic Connector 2
Additional Connectors: **X615**, **X619**, **X715**, **X727**		

Wire Colour Codes

B	Black	S	Slate	G	Green	P	Purple
N	Brown	R	Red	LG	Light Green	K	Pink
LN	Light Brown	O	Orange	U	Blue	W	White
L	Lilac	Y	Yellow	TQ	Turquoise		

https://tractormanualz.com/

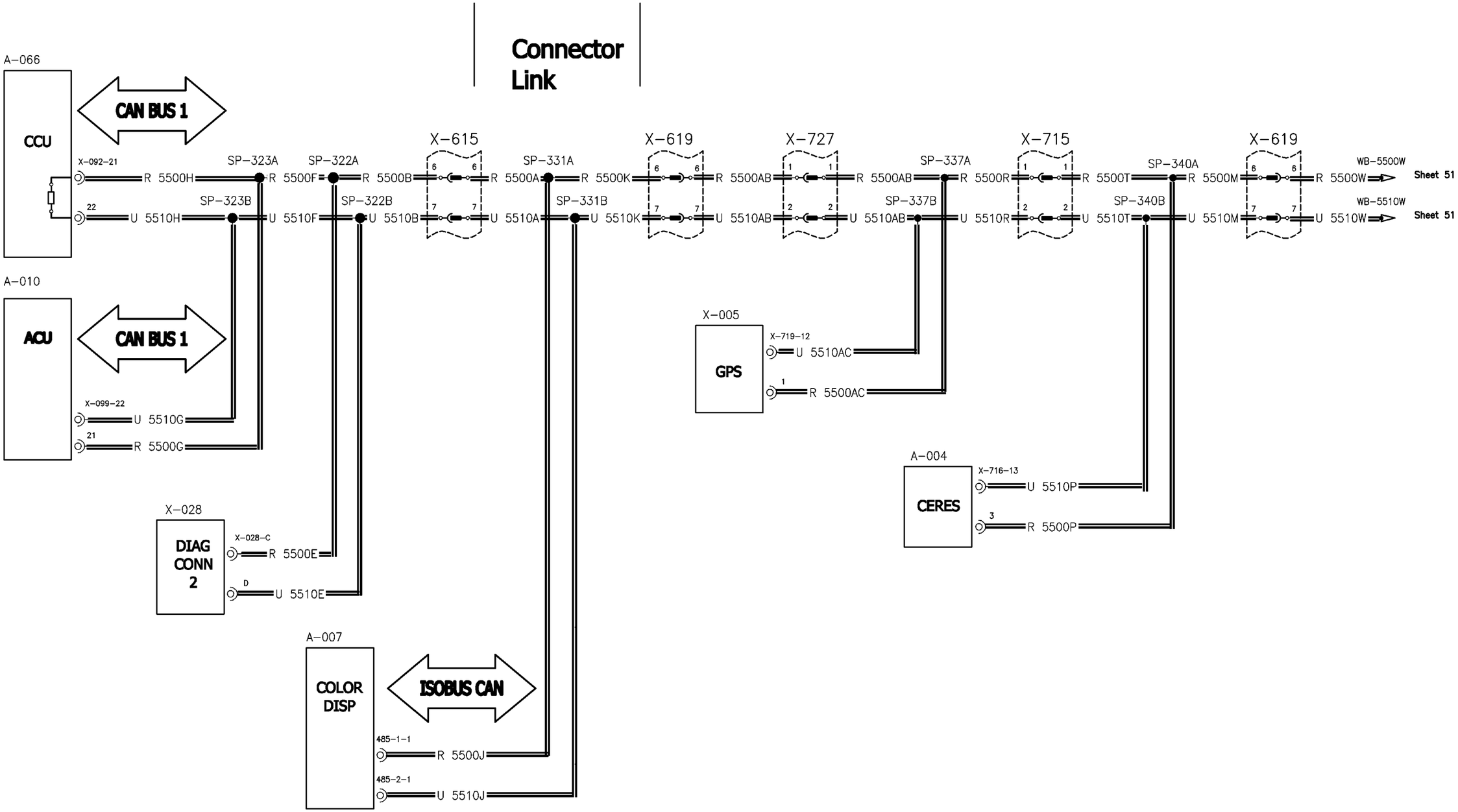

Sheet 50

SS08N050 1

https://tractormanualz.com/

Wiring harness - Electrical schematic frame 51 CAN System (EHR CAN)

Component	Connector	Description
A021	**X305**	El.Hydraulic Remote Valve 1
A022	**X306**	El.Hydraulic Remote Valve 2
A023	**X307**	El.Hydraulic Remote Valve 3
A024	**X308**	El.Hydraulic Remote Valve 4
A025	**X309**	El.Hydraulic Remote Valve 5
A081	**X776**	Armrest Control Unit (GARU)
R016	**X304**	CAN Terminating Resistor
Additional Connectors: **X020**, **X080**, **X088**, **X304**		

Wire Colour Codes

B	Black	S	Slate	G	Green	P	Purple
N	Brown	R	Red	LG	Light Green	K	Pink
LN	Light Brown	O	Orange	U	Blue	W	White
L	Lilac	Y	Yellow	TQ	Turquoise		

https://tractormanualz.com/

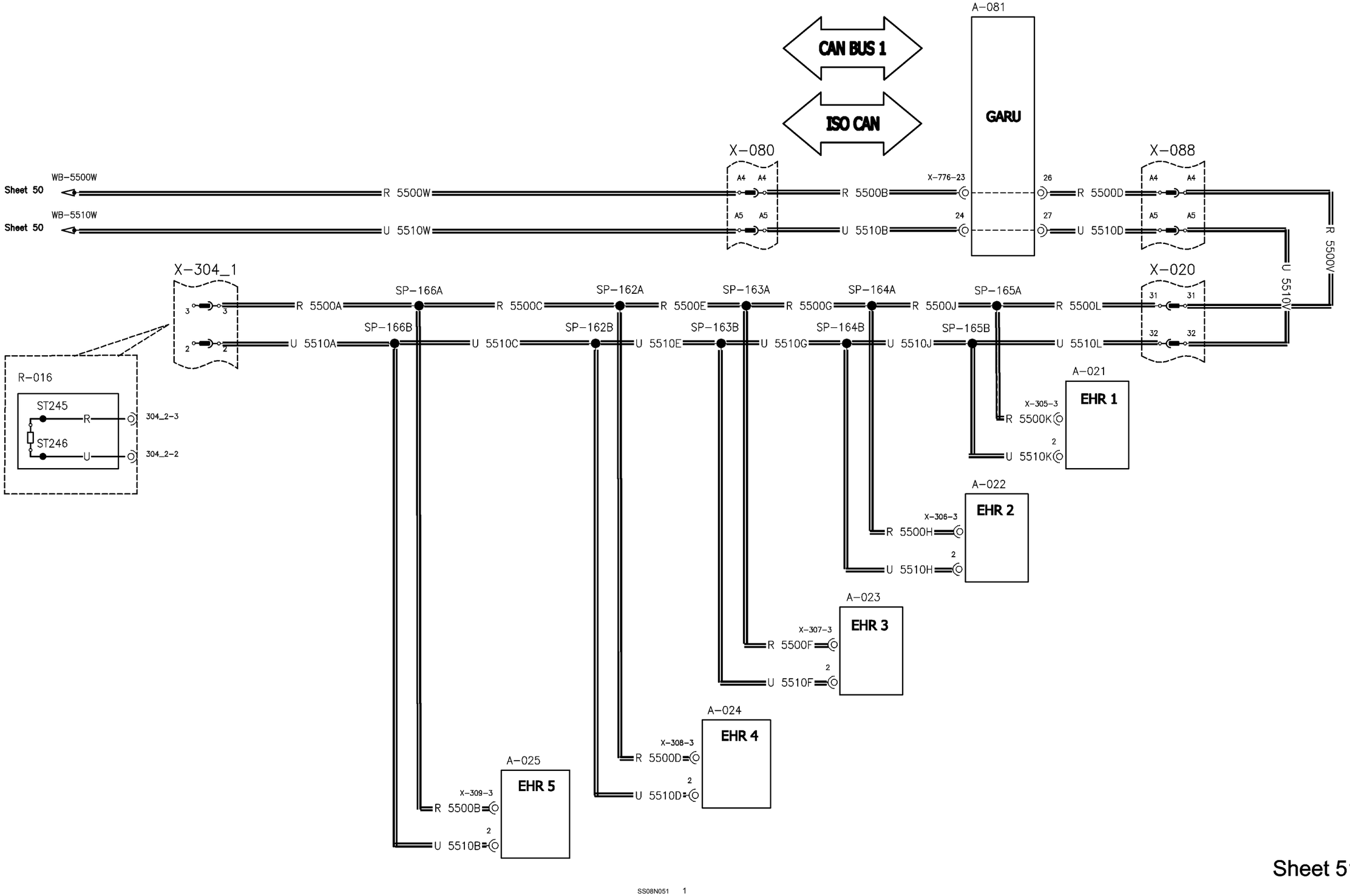

Sheet 51

https://tractormanualz.com/

Wiring harness - Electrical schematic frame 52 CAN System (EHR CAN)

Component	Connector	Description
A076	**X698**	Mid.Mount El.Hydraulic Remote Valve 2
A077	**X699**	Mid.Mount El.Hydraulic Remote Valve 3
A078	**X700**	Mid.Mount El.Hydraulic Remote Valve 4
A079	**X697**	Mid.Mount El.Hydraulic Remote Valve 1
R016	**X702**	CAN Terminating Resistor
Additional Connectors: **X304**		

Wire Colour Codes

B	Black	S	Slate	G	Green	P	Purple
N	Brown	R	Red	LG	Light Green	K	Pink
LN	Light Brown	O	Orange	U	Blue	W	White
L	Lilac	Y	Yellow	TQ	Turquoise		

https://tractormanualz.com/

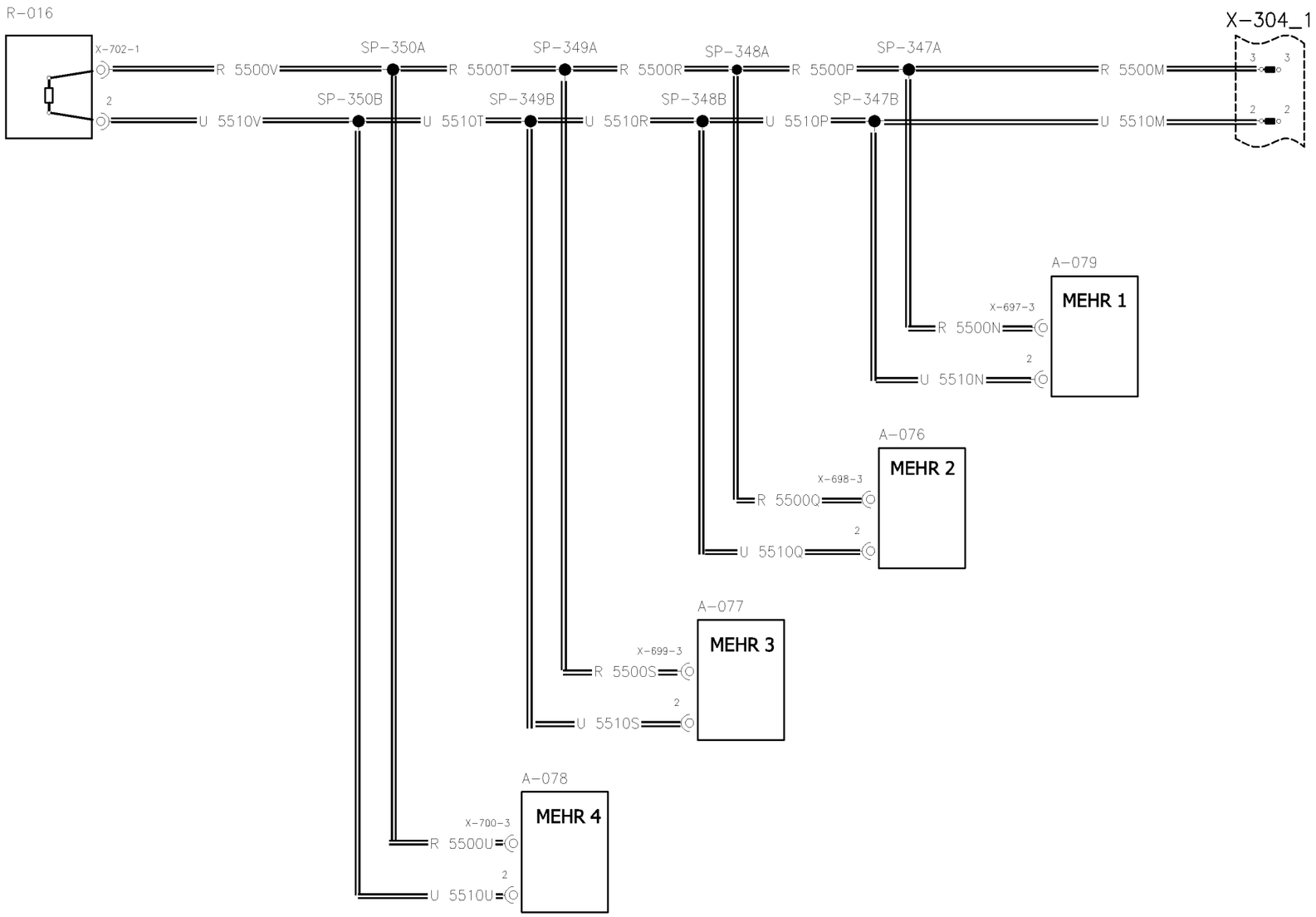

Sheet 52

SS08N052 1

https://tractormanualz.com/

Wiring harness - Electrical schematic frame 53 CAN System (ISO BUS CAN)

Component	Connector	Description
A007	**X485**	Colour Display
A050	**X618**	Active CAN Terminator
A054	**X616**	Iso Bus Control Unit
A070	X030-1	Iso Bus Control Unit CAN Plus
A071	X030-2	Iso Bus Control Unit CAN Minus
A072	X616B	Iso Bus Control Unit CAN Minus
A073	X616A	Iso Bus Control Unit CAN Plus
A081	**X776**	Armrest Control Unit (GARU)
J003	**X657**	Iso Bus Implement Socket Rear
J004	**X812**	Iso Bus Implement Socket Front
-	**X030**	Diagnostic Connector 1
Additional Connectors: **X024**, **X080**, **X088**, **X615**, **X618**, **X619**, **X660**		

Wire Colour Codes

B	Black	S	Slate	G	Green	P	Purple
N	Brown	R	Red	LG	Light Green	K	Pink
LN	Light Brown	O	Orange	U	Blue	W	White
L	Lilac	Y	Yellow	TQ	Turquoise		

https://tractormanualz.com/

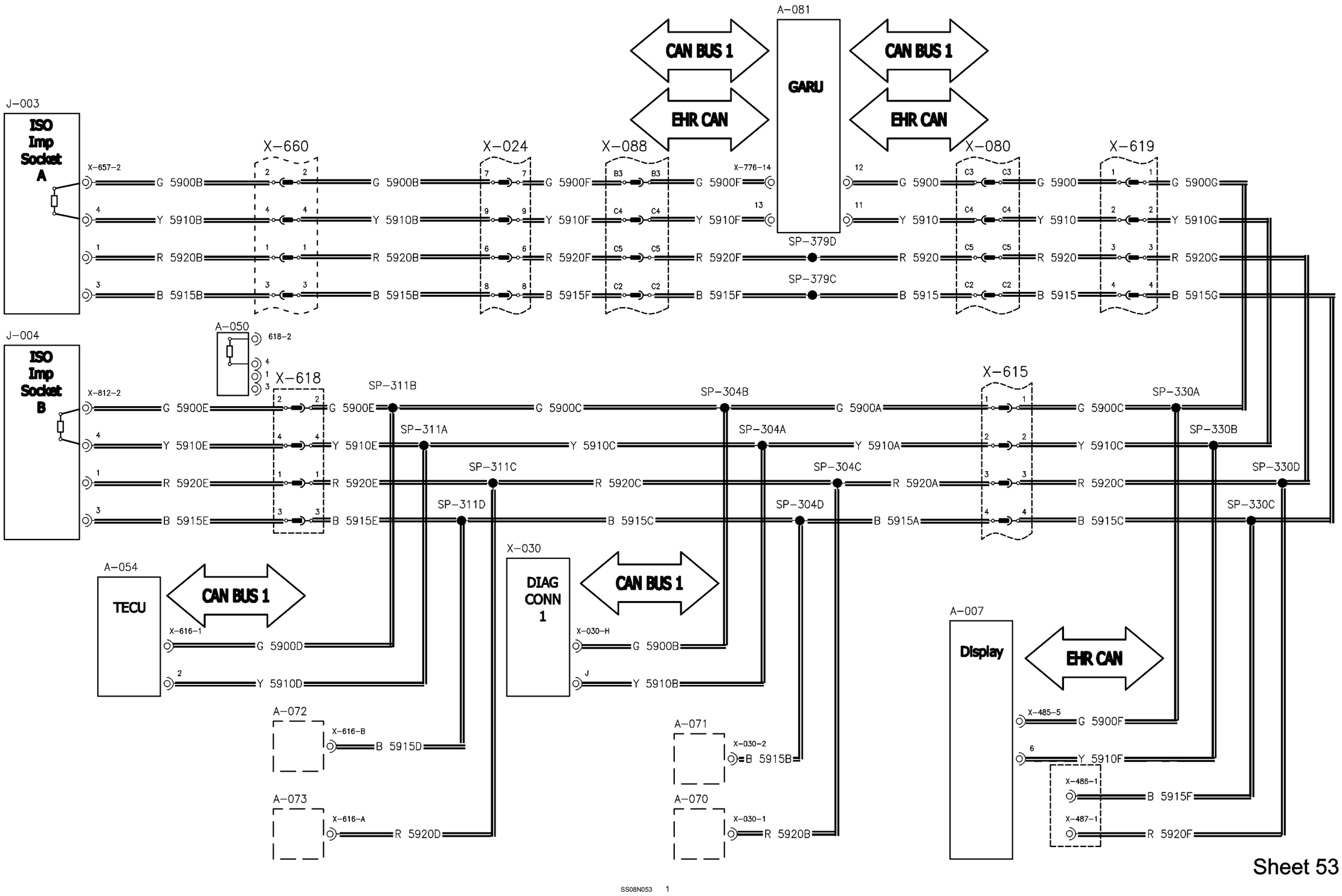

Sheet 53

SS08N053 1

https://tractormanualz.com/

https://tractormanualz.com/

Battery - Disconnect

1. Remove retaining bolts and lower the right-hand steps.

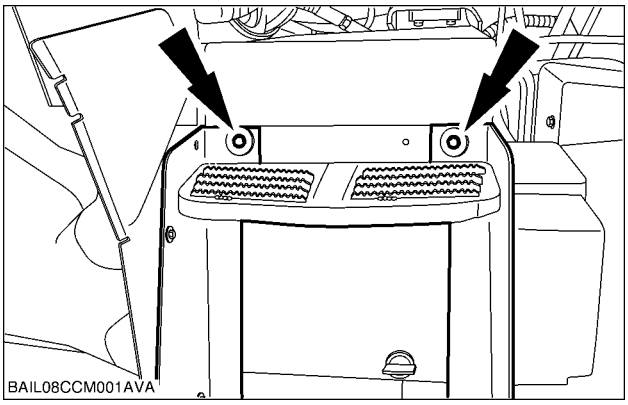

BAIL08CCM001AVA 1

2. Remove the R-clips **(1)** and remove the right-hand steps **(2)**.

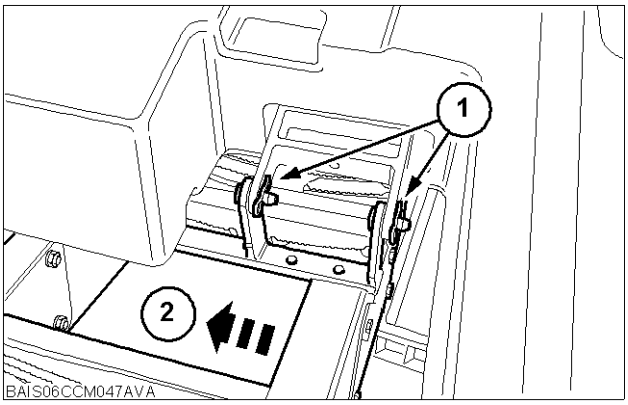

BAIS06CCM047AVA 2

3. Remove the battery cover.

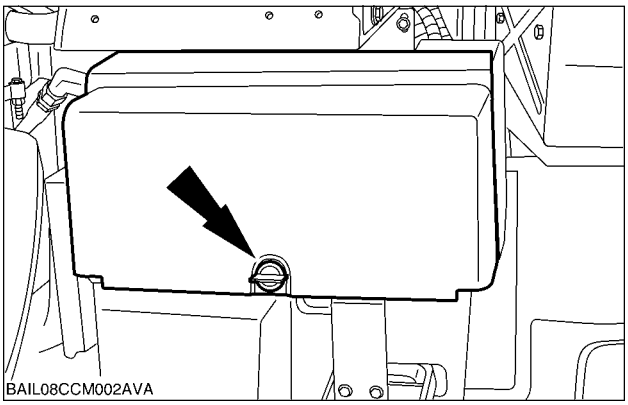

BAIL08CCM002AVA 3

4. Disconnect the negative lead **(1)** from the battery terminal and position to one side.
   Disconnect the positive lead **(2)** from the battery terminal and position to one side.
   .

NOTE: *Always disconnect the lead from the negative terminal first.*

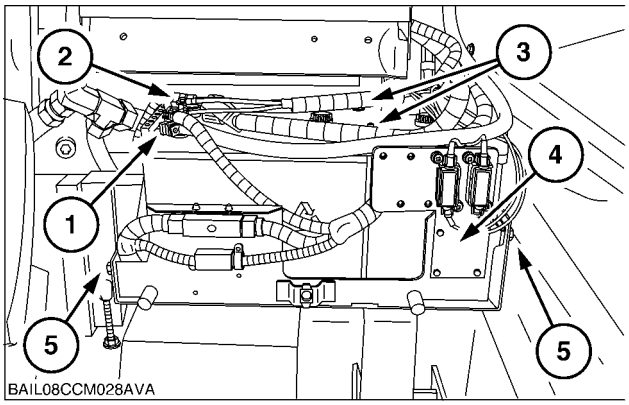

BAIL08CCM028AVA 4

https://tractormanualz.com/

Battery - Connect

1. Connect the positive battery lead **(4)**.
   Connect the battery negative lead **(5)**.

NOTE: *Always connect the lead to the negative terminal last.*

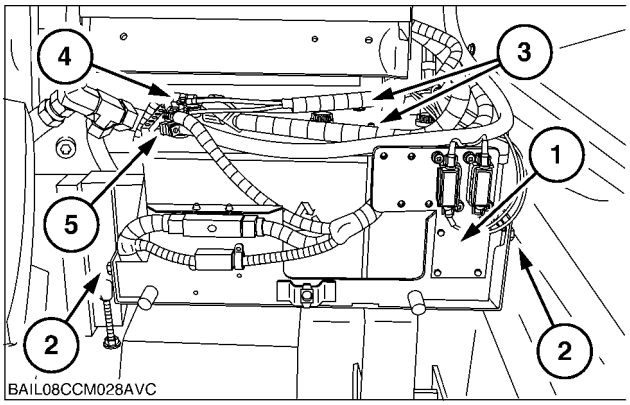

BAIL08CCM028AVC 1

2. Install the battery cover.

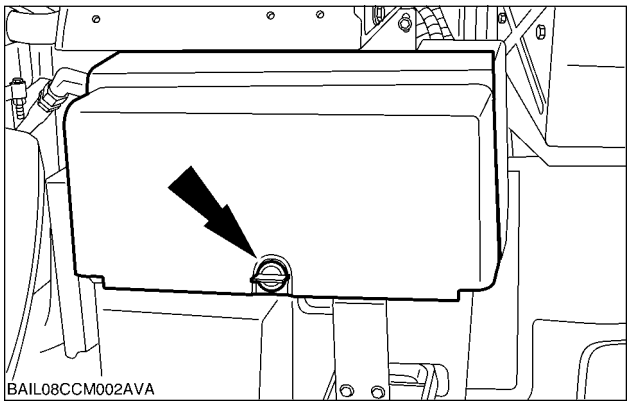

BAIL08CCM002AVA 2

3. Install the right-hand steps **(1)** and install the R-clips **(2)**.

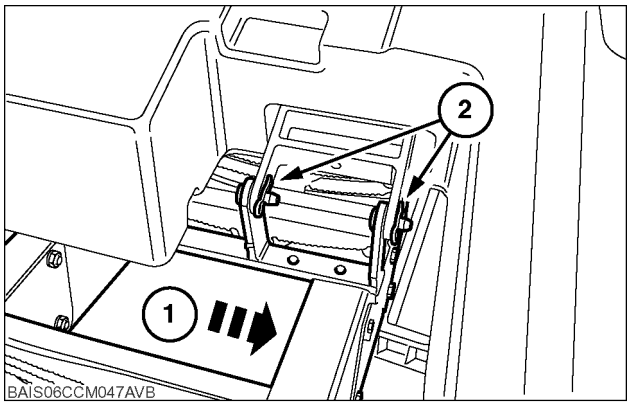

BAIS06CCM047AVB 3

4. Raise the steps and install the retaining bolts.

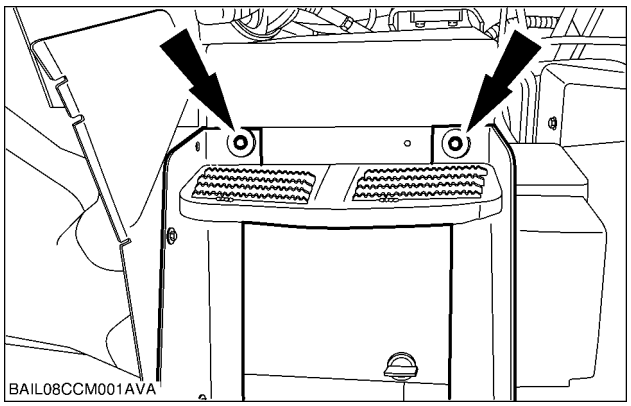

BAIL08CCM001AVA 4

https://tractormanualz.com/

5. The radio, if fitted, will lose its stored information and will require reprogramming. It should be noted that on models with electronic instrument panel and microprocessors, that these components will not lose their memories, i.e, electronic height control and transmission calibrations will not be affected.

https://tractormanualz.com/

Battery - Remove

1. Remove retaining bolts and lower the right-hand steps.

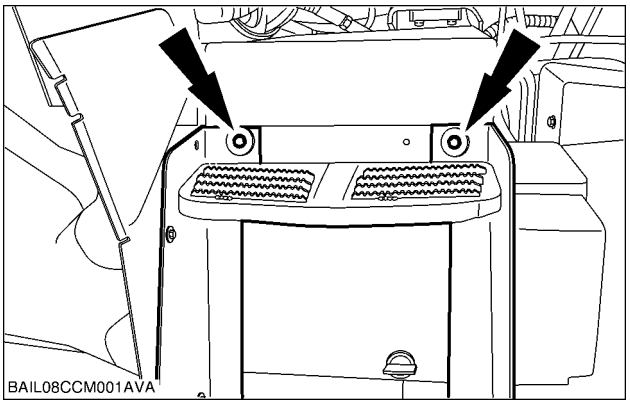

BAIL08CCM001AVA 1

2. Remove the R-clips **(1)** and remove the right-hand steps **(2)**.

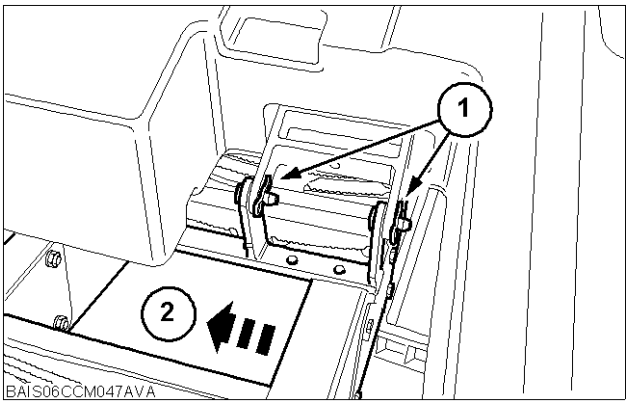

BAIS06CCM047AVA 2

3. Remove the battery cover.

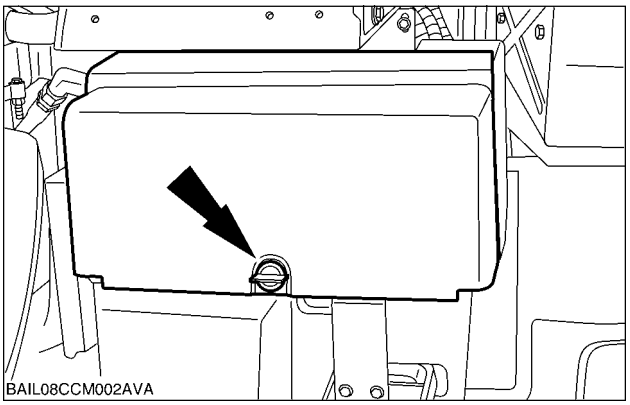

BAIL08CCM002AVA 3

4. Disconnect the negative lead **(1)** from the battery terminal and position to one side.
   Disconnect the positive lead **(2)** from the battery terminal and position to one side.
   Loosen the retaining nuts **(3)** and remove the battery clamp.
   Remove the retaining bolts **(5)** from the side plate **(4)** and position to one side taking care not to damage the wiring on the maxi fuse block.

NOTE: *Always disconnect the lead from the negative terminal first.*

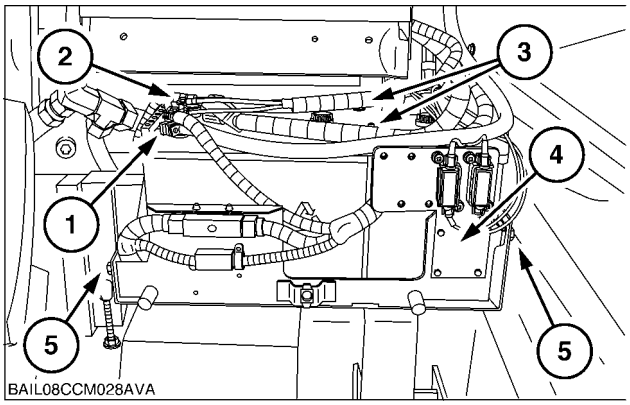

BAIL08CCM028AVA 4

https://tractormanualz.com/

5. Carefully slide the battery out of the carrier.

⚠ CAUTION ⚠

The component is heavy. ALWAYS use a hoist or get assistance to lift the component. Failure to comply could result in serious injury or death.

M944

https://tractormanualz.com/

Battery - Install

⚠ CAUTION ⚠

The component is heavy. ALWAYS use a hoist or get assistance to lift the component. Failure to comply could result in serious injury or death.

M944

1. Before installing the battery check the following:
   - Make sure the battery is clean and dry and the vent caps are properly installed.
   - Smear the terminals with petroleum jelly, do not use conventional lubricating greases as these can promote electrolytic corrosion.
   - Make sure the battery tray and clamps are clean and free from stones or small objects which may puncture the battery casing.
   - Make sure the battery terminal polarity is correct and that the terminal connections are sufficiently tight, but not overtightened.
2. Carefully slide the battery into the carrier.
3. Reposition the side plate **(1)** and install the retaining bolts **(2)**.
   Install the battery clamp and tighten the retaining nuts **(3)**.
   Connect the positive battery lead **(4)**.
   Connect the battery negative lead **(5)**.

NOTE: *Always connect the lead to the negative terminal last.*

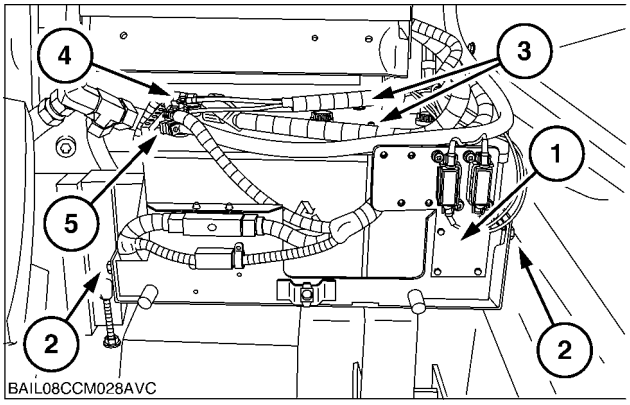

BAIL08CCM028AVC 1

4. Install the battery cover.

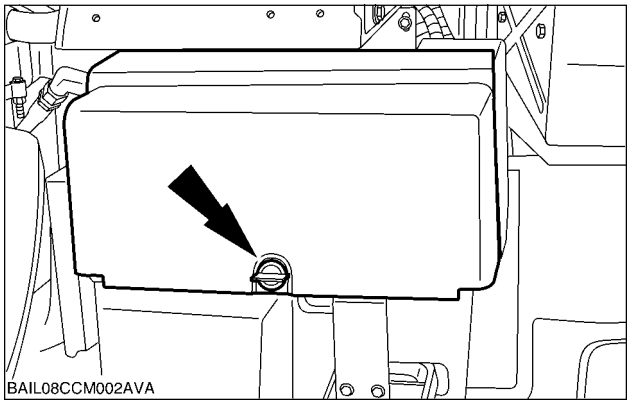

BAIL08CCM002AVA 2

https://tractormanualz.com/

5. Install the right-hand steps **(1)** and install the R-clips **(2)**.

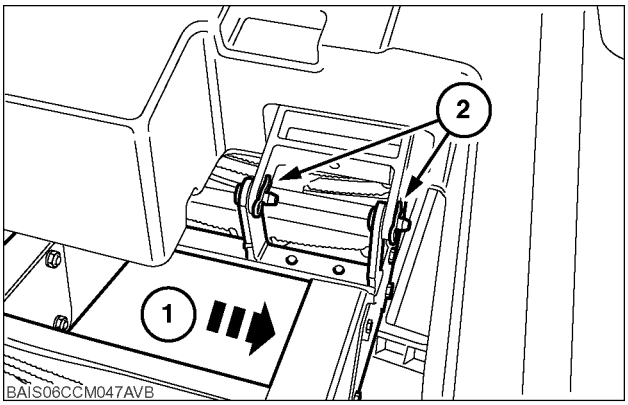

BAIS06CCM047AVB 3

6. Raise the steps and install the retaining bolts.

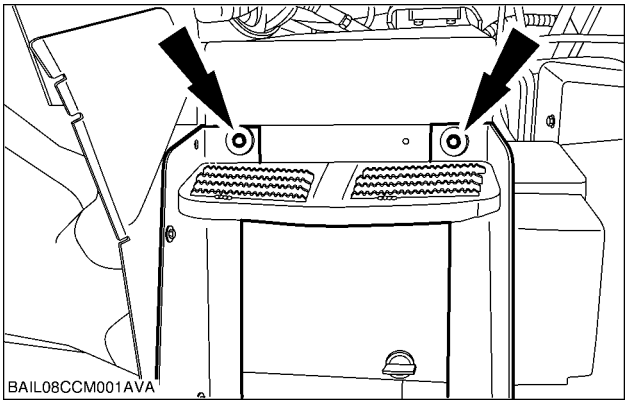

BAIL08CCM001AVA 4

7. The radio, if fitted, will lose its stored information and will require reprogramming. It should be noted that on models with electronic instrument panel and microprocessors, that these components will not lose their memories, i.e, electronic height control and transmission calibrations will not be affected.

https://tractormanualz.com/

Index

DISTRIBUTION SYSTEMS - A

ELECTRICAL POWER SYSTEM - 30.A

Wiring harness - Electrical schematic frame 02 Power Distribution (Fuses 1 - 14) 292
Wiring harness - Electrical schematic frame 03 Power Distribution (Fuses 15 - 21) 294
Wiring harness - Electrical schematic frame 04 Power Distribution (Fuses 22 - 30) 296
Wiring harness - Electrical schematic frame 05 Power Distribution (Fuses 31 - 45) 298
Wiring harness - Electrical schematic frame 06 Power Distribution (Fuses 46 - 54) 300
Wiring harness - Electrical schematic frame 07 Power Distribution (Fuses 55 - 60) 302
Wiring harness - Electrical schematic frame 08 Start/Charging (Start & Charging W/Isolator) 304
Wiring harness - Electrical schematic frame 09 Start/Charging (without Isolator) 306
Wiring harness - Electrical schematic frame 10 ECU (Engine ECU) 308
Wiring harness - Electrical schematic frame 11 Engine Control Unit (Engine ECU) 310
Wiring harness - Electrical schematic frame 12 Power Distribution (Power Earthing) 312
Wiring harness - Electrical schematic frame 13 Transmission (Transmission Controller) 314
Wiring harness - Electrical schematic frame 14 Transmission (Transmission Controller) 316
Wiring harness - Electrical schematic frame 15 Electronic Draft Control (Transmission Controller) 318
Wiring harness - Electrical schematic frame 16 5V Supply, Sensor Ground, Seat (Transmission Controller) . . 320
Wiring harness - Electrical schematic frame 17 Transmission (Power Take Off) 322
Wiring harness - Electrical schematic frame 18 SFA, EHR'S, Link Leveling (Auxiliary Control Unit) 324
Wiring harness - Electrical schematic frame 19 Front Hitch, PTO (Auxiliary Control Unit) 326
Wiring harness - Electrical schematic frame 20 Fast Steer (Steering Control Unit) 328
Wiring harness - Electrical schematic frame 21 Lighting (Instrument Cluster) 330
Wiring harness - Electrical schematic frame 22 Instruments (Instrument Cluster) 332
Wiring harness - Electrical schematic frame 23 ECU (Armrest) 334
Wiring harness - Electrical schematic frame 24 ECU (Armrest) 336
Wiring harness - Electrical schematic frame 25 Steering (Auto Guidance) 338
Wiring harness - Electrical schematic frame 26 Can Power (Can System) 340
Wiring harness - Electrical schematic frame 27 Heating (Climate Control Auto) 342
Wiring harness - Electrical schematic frame 28 Heating (Climate Control Manual) 344
Wiring harness - Electrical schematic frame 29 Heated Mirrors 346
Wiring harness - Electrical schematic frame 30 Heating (Heated Screen) 348
Wiring harness - Electrical schematic frame 31 Cigar Lighter (Implement Sockets) 350
Wiring harness - Electrical schematic frame 32 Lighting 352
Wiring harness - Electrical schematic frame 33 Lighting Auxiliary (Worklamps/Beacons) 354
Wiring harness - Electrical schematic frame 34 Lighting (Side, Console & Licence Plate Lamps) 356
Wiring harness - Electrical schematic frame 37 Lighting (Headlamps / Worklamps Hood) 358

https://tractormanualz.com/

Wiring harness - Electrical schematic frame 38 Lighting (Trailer) 360
Wiring harness - Electrical schematic frame 39 Lighting (Interior Lights) 362
Wiring harness - Electrical schematic frame 40 Lighting (Stop / Tail Lamps & Worklamps) 364
Wiring harness - Electrical schematic frame 41 I.C.E (Radio) 366
Wiring harness - Electrical schematic frame 42 Washers & Wipers 368
Wiring harness - Electrical schematic frame 43 Colour Display (Instruments) 370
Wiring harness - Electrical schematic frame 44 Braking (Trailer Brakes) 372
Wiring harness - Electrical schematic frame 45 Braking (Electronic Park Lock) 374
Wiring harness - Electrical schematic frame 46 Front Loader Relays 376
Wiring harness - Electrical schematic frame 47 Isobus (Isobus Power) 378
Wiring harness - Electrical schematic frame 48 Diagnostics 380
Wiring harness - Electrical schematic frame 49 CAN System (CAN BUS 1) 382
Wiring harness - Electrical schematic frame 50 CAN System (EHR CAN) 384
Wiring harness - Electrical schematic frame 51 CAN System (EHR CAN) 386
Wiring harness - Electrical schematic frame 52 CAN System (EHR CAN) 388
Wiring harness - Electrical schematic frame 53 CAN System (ISO BUS CAN) 390
Alternator - General specification 11
Alternator - Static description 16
Alternator - Torque 11
Battery - Connect 394
Battery - Disconnect 393
Battery - General specification 12
Battery - Install 398
Battery - Remove 396
Battery - Static description 17
Connector - Component Diagram 00 27
Connector - Component diagram 01 33
Connector - Component diagram 02 37
Connector - Component diagram 03 44
Connector - Component diagram 05 52
Connector - Component diagram 06 54
Connector - Component diagram 07 55
Connector - Component diagram 08 61
Connector - Component diagram 09 67
Connector - Component diagram 10 75
Connector - Component diagram 11 80
Connector - Component diagram 12 84
Connector - Component diagram 13 87
Connector - Component diagram 15 89
Connector - Component diagram 16 91
Connector - Component diagram 17 96
Connector - Component diagram 18 100

https://tractormanualz.com/

Connector - Component diagram 19 104
Connector - Component diagram 20 108
Connector - Component diagram 21 109
Connector - Component diagram 22 115
Connector - Component diagram 23 119
Connector - Component diagram 24 125
Connector - Component diagram 25 126
Connector - Component diagram 26 129
Connector - Component diagram 27 132
Connector - Component diagram 28 135
Connector - Component diagram 29 136
Connector - Component diagram 30 137
Connector - Component diagram 32 142
Connector - Component diagram 33 143
Connector - Component diagram 39 147
Connector - Component diagram 40 149
Connector - Component diagram 42 158
Connector - Component diagram 43 162
Connector - Component diagram 44 164
Connector - Component diagram 45 165
Connector - Component diagram 46 166
Connector - Component diagram 47 169
Connector - Component diagram 48 170
Connector - Component diagram 49 173
Connector - Component diagram 50 174
Connector - Component diagram 52 177
Connector - Component diagram 53 180
Connector - Component diagram 54 183
Connector - Component diagram 55 187
Connector - Component diagram 57 190
Connector - Component diagram 60 191
Connector - Component diagram 61 195
Connector - Component diagram 62 201
Connector - Component diagram 63 207
Connector - Component diagram 65 208
Connector - Component diagram 66 210
Connector - Component diagram 67 213
Connector - Component diagram 68 216
Connector - Component diagram 69 219
Connector - Component diagram 70 223
Connector - Component diagram 71 227
Connector - Component diagram 72 233

https://tractormanualz.com/

Connector - Component diagram 73 236
Connector - Component diagram 74 239
Connector - Component diagram 75 242
Connector - Component diagram 76 248
Connector - Component diagram 77 251
Connector - Component diagram 78 254
Connector - Component diagram 80 258
Connector - Component diagram 81 260
Connector - Component diagram 82 266
Connector - Component diagram 83 270
Connector - Overview Wiring Harness Drive Line 21
Connector - Overview Wiring Harness Engine 19
Connector - Overview Wiring Harness Fender 25
Connector - Overview Wiring Harness Hood 18
Connector - Overview Wiring Harness Main Cab 23
Connector - Overview Wiring Harness Roof 26
ELECTRICAL POWER SYSTEM - General specification 6
ELECTRICAL POWER SYSTEM - Static description PROTECTING THE ELECTRONIC AND ELECTRICAL SYSTEMS DURING BATTERY CHARGING OR WELDING 13
Fuse and relay box - General specification 7
Fuse and relay box - Static description 14
Wiring harness - Electrical schematic frame 01 Power Distribution (Maxi Fuses 1 - 6) 290
Wiring harness - Overview 273

https://tractormanualz.com/

https://tractormanualz.com/

DISTRIBUTION SYSTEMS - A

ELECTRONIC SYSTEM - 50.A

Puma 165 CVX
Puma 180 CVX
Puma 195 CVX
Puma 210 CVX
Puma 225 CVX

https://tractormanualz.com/

Contents

DISTRIBUTION SYSTEMS - A

ELECTRONIC SYSTEM - 50.A

TECHNICAL DATA
Control module
Configure H-Menu Overview 3
Configure Instrument Cluster 11
Configure - Front Axle Suspension, Rear Electronic Hydraulic Remote Valves, Front PTO, Front Hitch 34
Configure - CVT Transmission, Electronic Draft Control, Rear PTO, Front Wheel Drive, Differential Lock, Front Electronic Hydraulic Remote Valves, Engine. 76
Configure KA - Steering Control 135
Configure Armrest 155
Configure Electronic Park Lock (EPL) 167

FUNCTIONAL DATA
Control module
Electronic schema Instrument Cluster - ICU3 Module IE 188
Electronic schema Electronic Park Lock (EPL) - Module XA 190
Electronic schema Central Control Unit (RE module) 192
Electronic schema Auxiliary Control Unit (RM module) 194
Electronic schema Arm Rest Control Unit (LC module) 196
Electronic schema Small Wide Colour Display 198
Electronic schema Radio and Hands Free module 200
Electronic schema Tractor Electronic Control Unit (TECU) 202
Electronic schema Automatic Temperature Control 204
Electronic schema Fast Steer (KA Module) 206
Electronic schema Engine control Module (EDC 16) 208
Electronic schema Auto Guidance Module 210
Electronic schema Electro-Hydraulic Remotes 212
Fault code index 215

SERVICE
ELECTRONIC SYSTEM
Calibrate ’U’ Code Listing 234

https://tractormanualz.com/

Control module - Configure H-Menu Overview

Identifier	Controller Functions
IE	Enhanced ICU3 Instrument Cluster
IF	Basic ICU3 Instrument Cluster
RE	CVT Transmission, Electronic Draft Control, Rear PTO, Front Wheel Drive, Differential Lock, Midmount Electronic Hydraulic Remote Valves, Engine
RM	Front Axle Suspension, Rear Electronic Hydraulic Remote Valves, Front PTO, Front Hitch
JA	Keypad
KA	Fast Steer System
LC	Armrest Controller
XA	Electronic Park Lock

INTRODUCTION

To gain access to the diagnostic “H" menu mode routine, it is necessary to use the diagnostic test switch, special tool **380000843 (1)** in the tractor diagnostic connector **X030**. There are two diagnostics connectors located in the trim panel behind the operators seat. The left hand connector is used to access the on board diagnostics. with the test switch via the main vehicle CAN Bus system. The other diagnostic connector is used by the EST for accessing the secondary CAN Bus system.

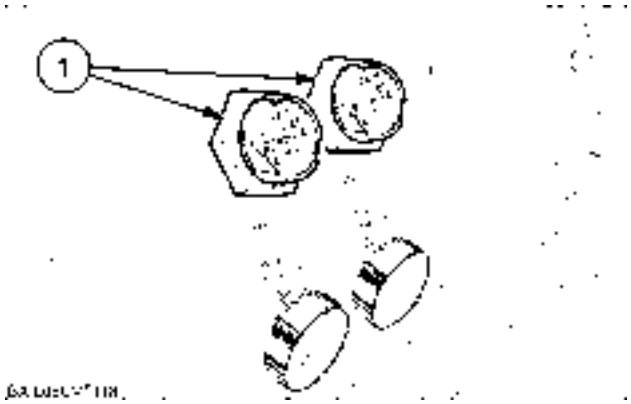

BAIL08CVT118A 1

https://tractormanualz.com/

The instrument cluster (ICU3) dot matrix display **(1)** is located on the right hand ’A’ pillar, the dot matrix displays all the “H" menu information.
The "H" menu navigation keys **(2)** are located on the key pad.

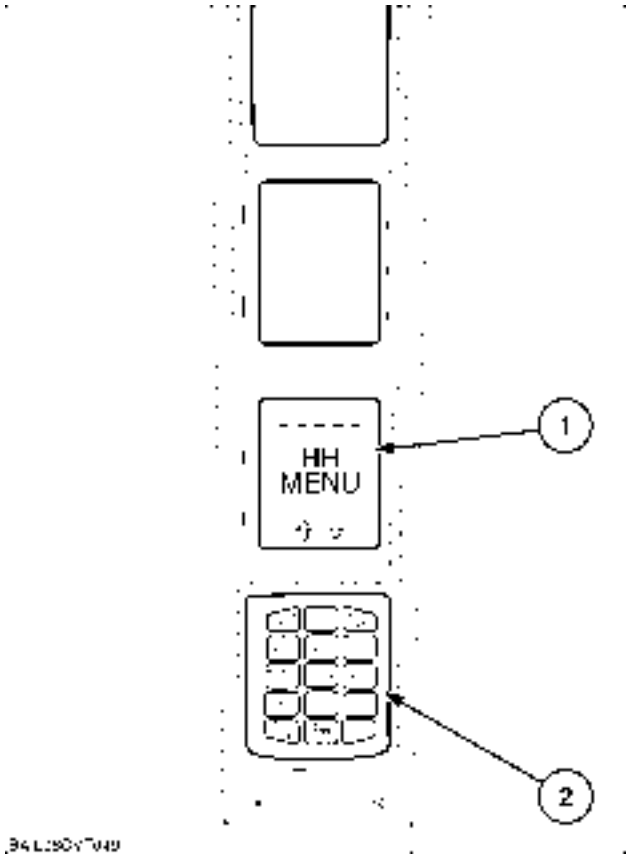

BAIL08CVT049 2

https://tractormanualz.com/

H Menu Navigation Procedure

Connect the special tool **380000843** to the diagnostic connector and turn the key start switch ON.
At key ON the ICU3 will automatically build a list of the controllers connected on the Controller Area Network (CAN), and will store it in the Electrically Erasable Programmable Read Only Memory (EEPROM).
The dot matrix display will show “HH MENU" to indicate that the “H" menu has been activated.

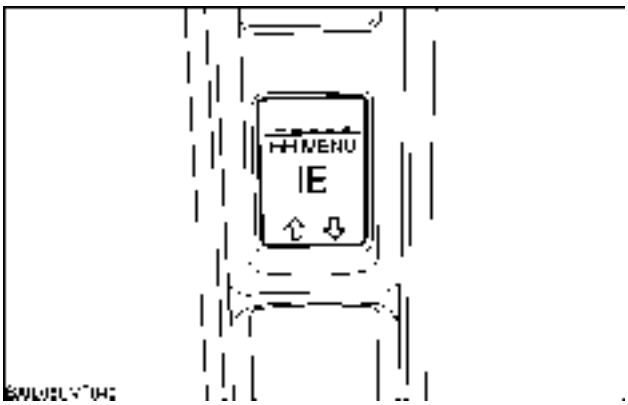

BAIL08CVT040 3

To navigate the “H" menus use the navigation “up" key and “down" key to scroll through the options, and the “menu" key to select the required controller or “H" menu.
(1) "up" key
(2) "down" key
(3) "menu" key (return/escape)

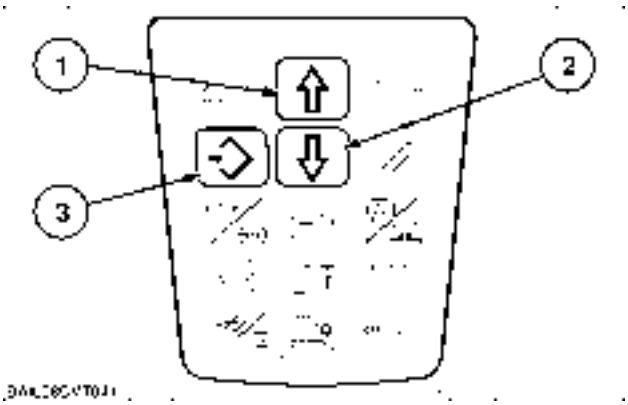

BAIL08CVT041 4

https://tractormanualz.com/

Controller Identifier Code Table

The controller is identified with a two letter code, i.e. IE - Enhanced ICU3.

Identifier	Controller Functions
IE	Enhanced ICU3 Instrument Cluster
IF	Basic ICU3 Instrument Cluster
RE	CVT Transmission, Electronic Draft Control, Rear PTO, Front Wheel Drive, Differential Lock, Midmount Electronic Hydraulic Remote Valves, Engine
RM	Front Axle Suspension, Rear Electronic Hydraulic Remote Valves, Front PTO, Front Hitch
JA	Keypad
KA	Fast Steer System
LC	Armrest Controller
XA	Electronic Park Lock

Select the controller that requires diagnostics or configuration.
Depress the “menu" key to show the first controller identifier code in the list.
The up arrow **(1)** and the down arrow **(2)** indicate there are other controllers available.
To navigate through the list of controllers use the “up" and "down" key.

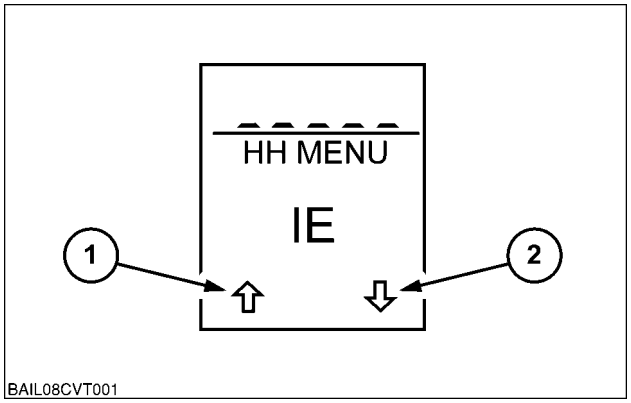

BAIL08CVT001 5

If a controller cannot be found on the CAN, a symbol will be displayed to indicate that there is no communication between the ICU3 and the selected controller.

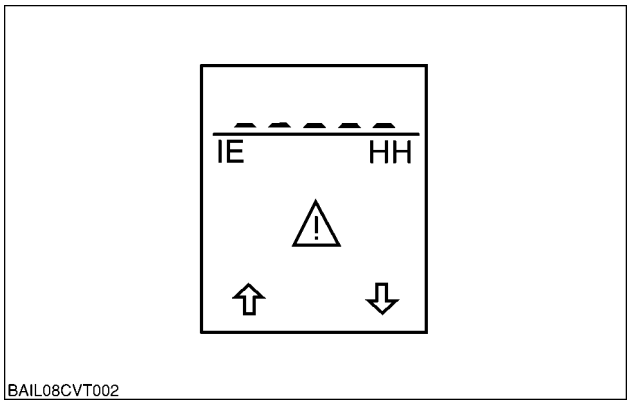

BAIL08CVT002 6

https://tractormanualz.com/

When the required controller is located in the list, depress the menu key **(1)** to select it.

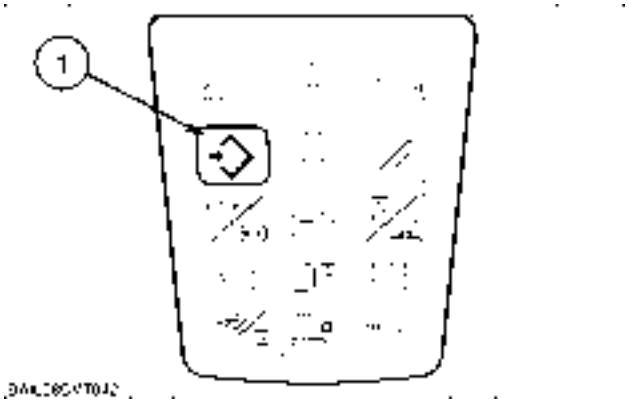

BAIL08CVT042 7

The display will change to show the “HH menu" select screen.

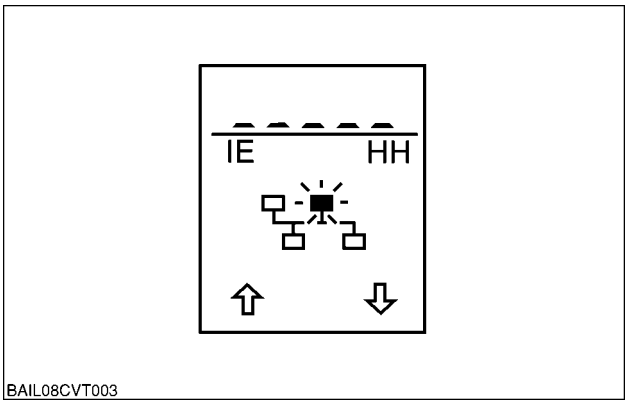

BAIL08CVT003 8

https://tractormanualz.com/

H Menu Common Features

The “H“ menus consist of the following menu codes.

NOTE: *Not all the following “H" menus are available for all controllers.*

HH	Service Menu
H1	Calibration procedures
H2	View stored calibration values
H3	Configurations and options
H4	View software revision level
H5	Switch operation test
H6	Vehicle information view
H7	Vehicle test modes
H8	Clear stored calibration information
H9	Voltmeter diagnostics
HA	Demonstration mode
HB	Display stored fault codes
HC	Clear all stored fault codes
HE	Display frequency inputs
HF	View controller hardware information
HJ	Electronic hydraulic remote control valve number programming
HK	Rear electronic hydraulic remote control valve diagnostics

Dot Matrix Display Symbols

1. Engine
2. Transmission
3. Differential lock
4. Electronic draft control
5. Front hitch
6. Rear P.T.O. system
6a. Front P.T.O. system
7. Rear Electronic remote valves
7a Front EHRs 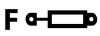
8. Front suspension
9. Four wheel drive
10. Fast steer system
11. HTS
12. Engine shutdown
13. Air brake
14. Steering sensor
16. Error code management
17. SWCD
18. Front electronic remote valves

https://tractormanualz.com/

The up and down arrows indicate there are other “H" menus available.
To navigate through the list of "H" menus use the “up" and "down" key.
The downward arrow **(1)** indicates there is more than one sub-system that uses the same menu (multi-functional “H" menu).
Depress the “menu" key to select the “H" menu required.

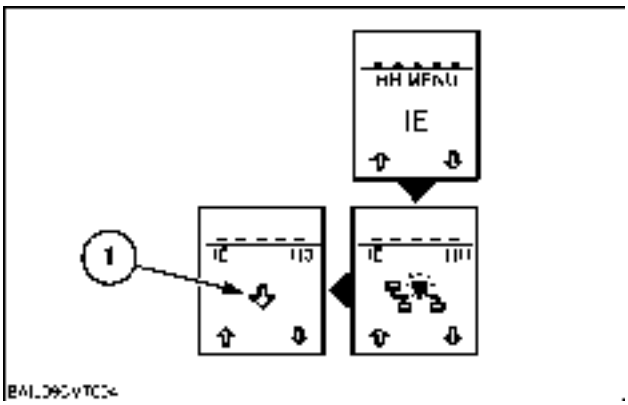

BAIL08CVT004 9

The controller selected will be displayed in the top left hand corner of the dot matrix display **(1)**.
The “H" menu will be displayed in the top right hand corner of the dot matrix display **(2)**.

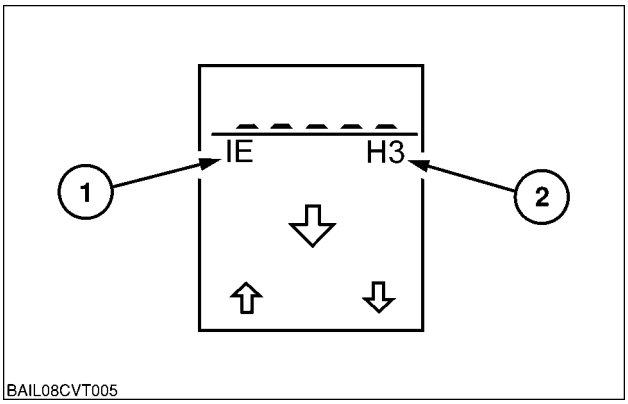

BAIL08CVT005 10

The “H" menu select screen will be displayed if the menu is common to all sub-systems, i.e. H5 - Switch test and H9 - Voltmeter.

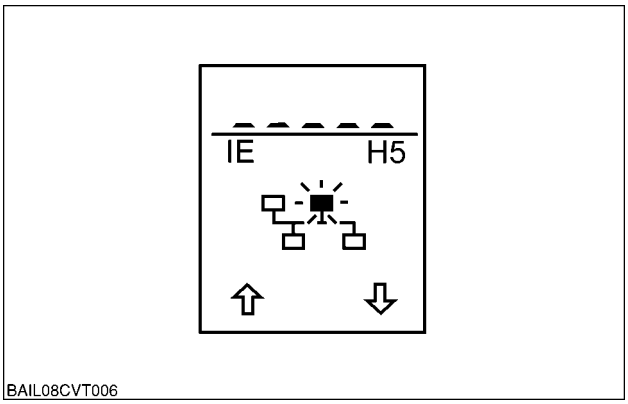

BAIL08CVT006 11

https://tractormanualz.com/

If the menu is specific to only one sub-system, the relevant icon will be displayed in the centre of the dot matrix display, i.e. engine icon for HA - Demonstration mode.

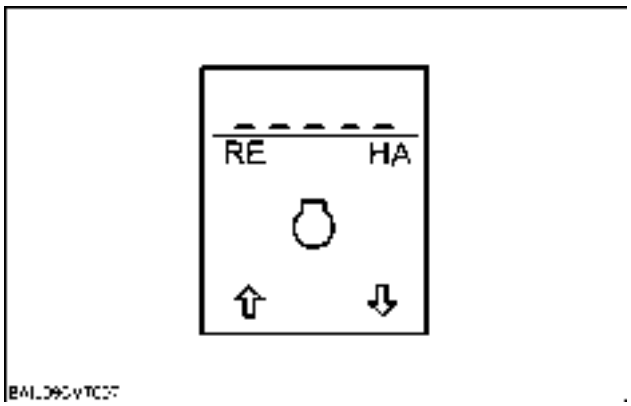

BAIL08CVT007 12

When the sub-system has been selected, the navigation arrows will no longer be displayed.
The top section of the dot matrix display will be used to display the set-ups or values for the selected sub-system.

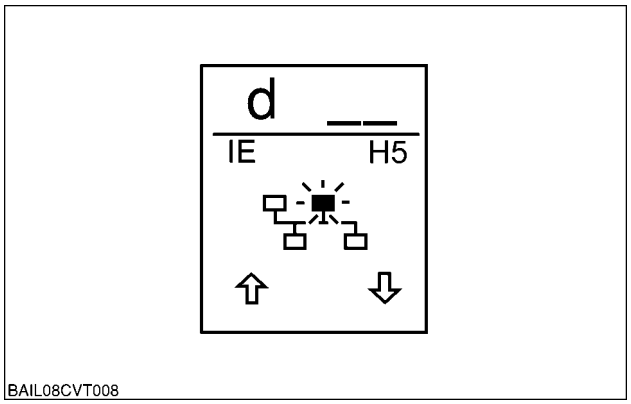

BAIL08CVT008 13

https://tractormanualz.com/

NOTE: *To return to the “H" menu select screen from H1 - Calibrations the keystart needs to be turned OFF. This will store the completed calibrations.*

To return back to the “H" menu select screen, depress the "menu" key.

NOTE: *To return to the controller select screen, “HH" must be indicated in the top right hand corner of the dot matrix display.*

To return back to the controller select screen, depress the “menu" key again.

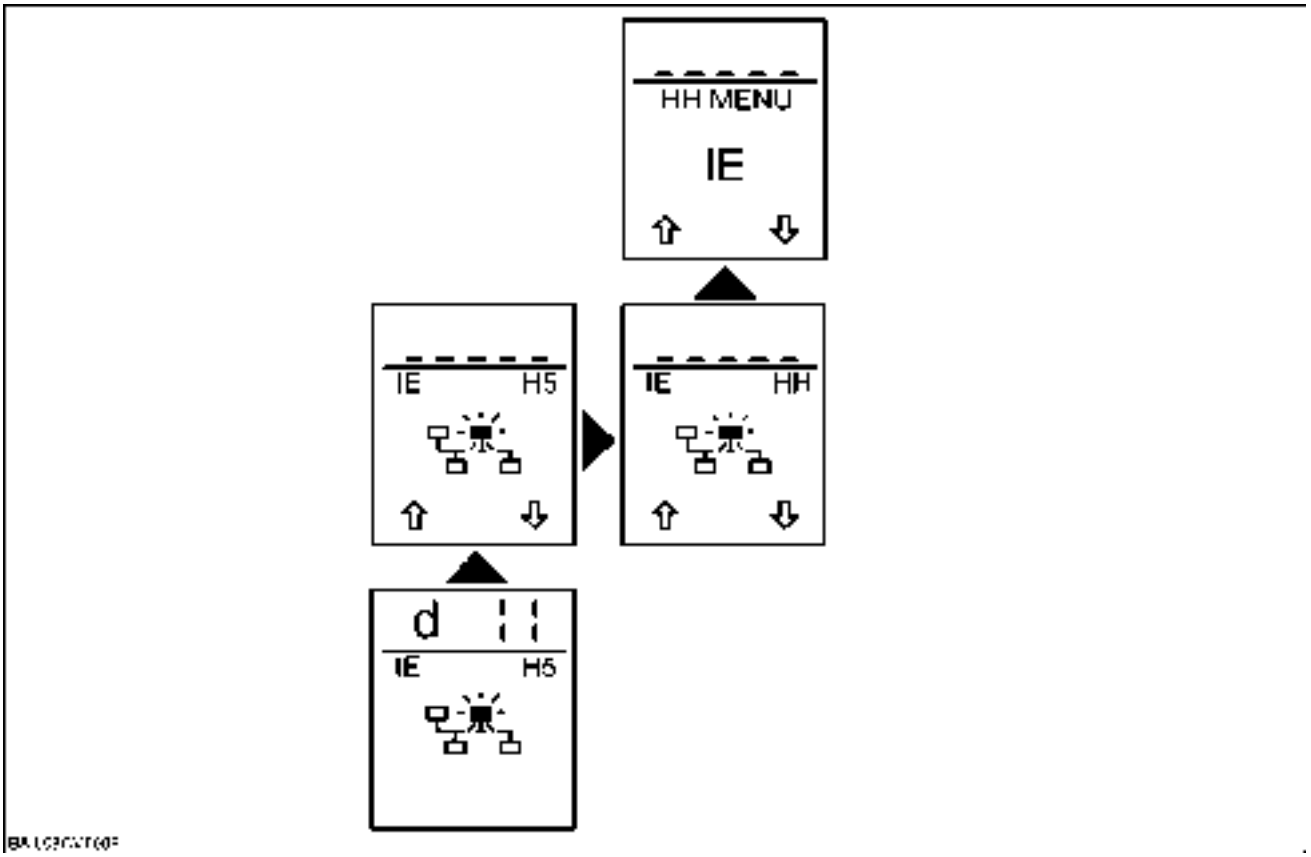

BAIL08CVT009 14

Control module - Configure Instrument Cluster

Instrument Cluster Unit (ICU3)

IE - Enhanced ICU3
IF - Basic ICU3

NOTE: *IE Enhanced ICU3 is shown in the screen displays.*

HH	Service Menu	Figure Number
H1	Not used	-
H2	Not used	-
H3	Configurations	**1**
H4	View software revision level	**14**
H5	Switch operation test	**17**
H6	Not used	-
H7	Not used	-
H8	Clear Electrically Erasable Programmable Read Only Memory (EEPROM)	**21**
H9	Voltmeter	**25**
HA	Not used	-
HB	Display stored fault codes	**28**

https://tractormanualz.com/

HH	Service Menu	Figure Number
HC	Clear all stored fault codes	**31**
HD	Not used	-
HE	Display frequency inputs	**34**
HF	View controller hardware information	**36**
HH	Return to main menu	-

https://tractormanualz.com/

H3 - CONFIGURATIONS

This menu displays the configurations available for:

- Engine shutdown
- Error code reduction
- Electronic front hitch option
- AFS 200
- Steering sensor selection
- Air brake selection

H3 Menu Screen Select Diagram

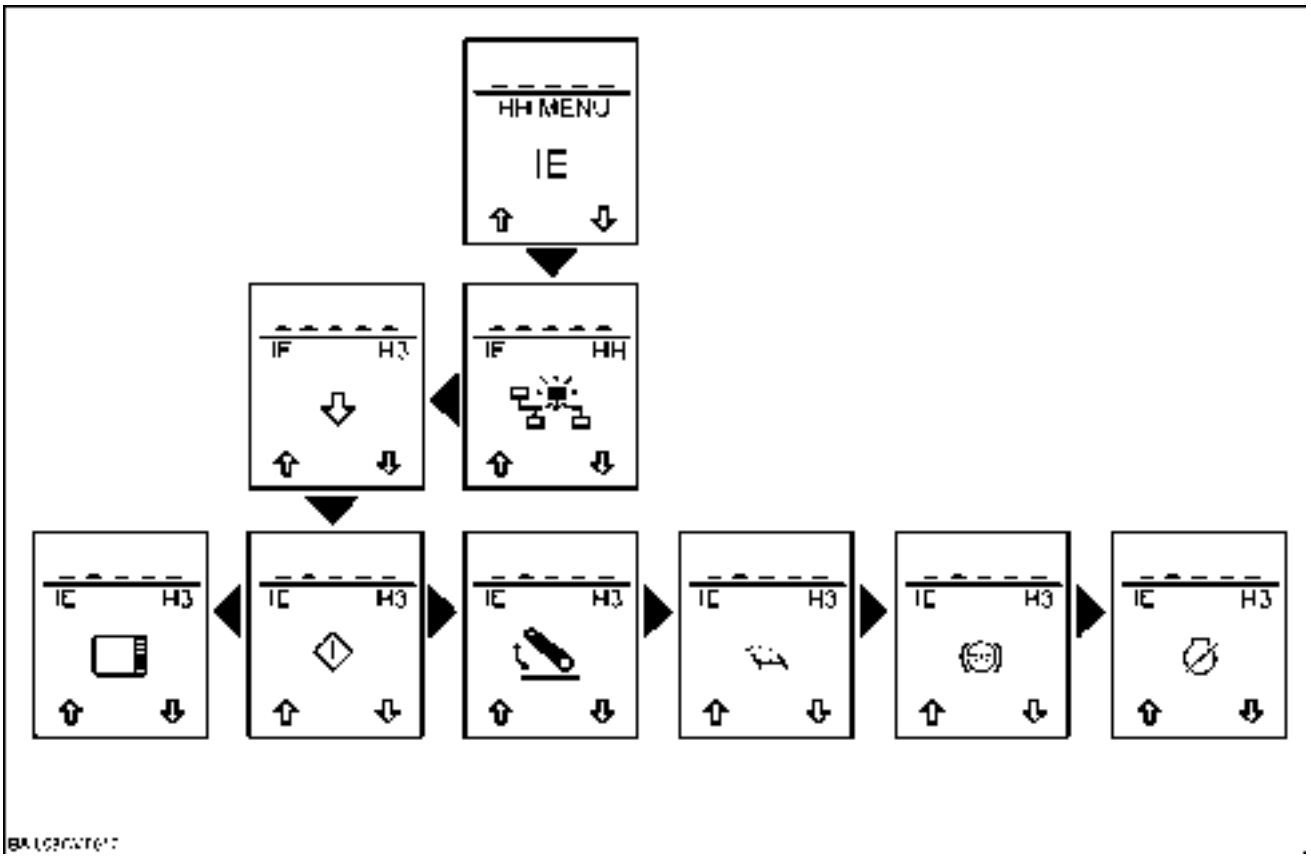

BAIL08CVT010 1

https://tractormanualz.com/

ENGINE SHUTDOWN OPTIONS

Select the engine shutdown sub-system by depressing the “menu" key.

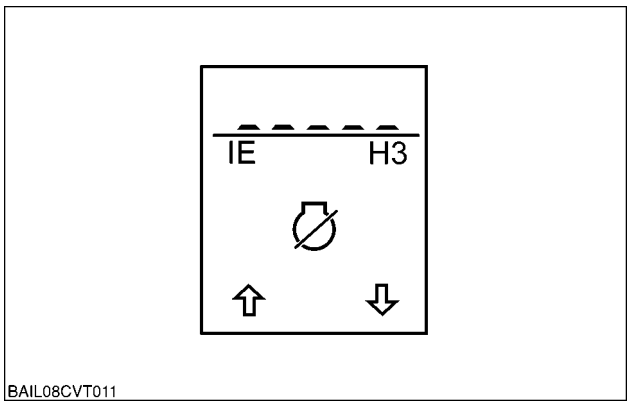

BAIL08CVT011 2

NOTE: *The default setting is NO.*

Scroll through the available options using the navigation “up" or “down" key.
Refer to the engine shutdown options table below.

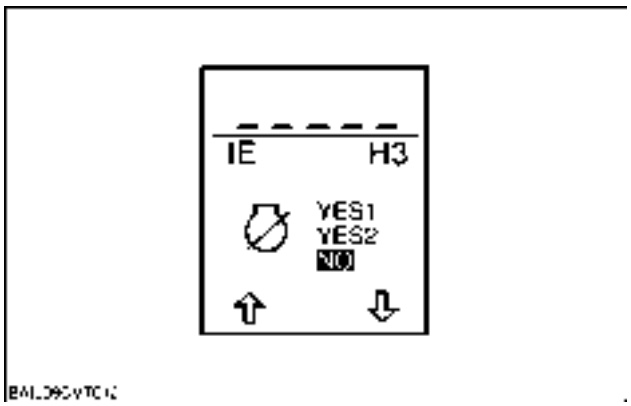

BAIL08CVT012 3

Depress and hold the navigation “up" or “down" key to store the selection, an audible tone will be heard to confirm the selection.
Depress the “menu" key to continue navigating through the “HH" menus.

Engine Shutdown Options

Options		CONDITIONS REQUIRED FOR ENGINE SHUTDOWN	CONDITIONS WHICH OVERRIDE ENGINE SHUTDOWN OPTIONS (All conditions must be met)			
		Operating Condition	Operator Present	Operator Not Present	Vehicle Station-ary	Vehicle Moving
NO	**No engine shutdown**	**The engine will not shut down**	**-**	**-**	**-**	**-**
YES1	Always shutdown engine	Engine oil pressure - Low	*	*	*	*
		Engine coolant temperature - High	*	*	*	*
		Driveline oil temperature - High		*	*	
		Driveline oil pressure - Low		*	*	
YES2	Stationary engine shutdown	Engine oil pressure - Low		*	*	
		Engine coolant temperature - High		*	*	
		An external device is requesting the engine to shutdown		*	*	
		Driveline oil temperature - High		*	*	
		Driveline oil pressure - Low		*	*	

https://tractormanualz.com/

AFS 200 OPTIONS

Select the AFS 200 sub-system by depressing the “menu" key.

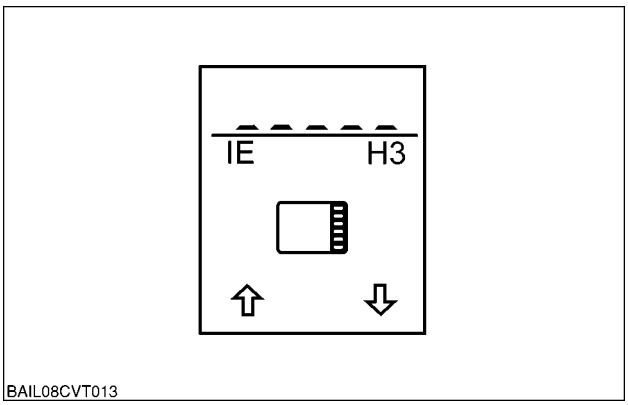

BAIL08CVT013 4

NOTE: *The default setting is “No" without AFS 200.*

Scroll through the available options using the navigation “up" or “down" key.

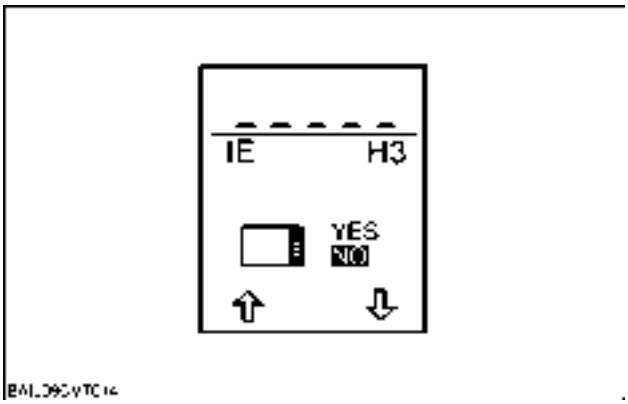

BAIL08CVT014 5

Depress and hold the navigation “up" or “down" key to store the selection, an audible tone will be heard to confirm the selection.
Depress the “menu" key to continue navigating through the “HH" menus.

https://tractormanualz.com/

ERROR CODE REDUCTION OPTIONS

Select the error code reduction sub-system by depressing the “menu" key.

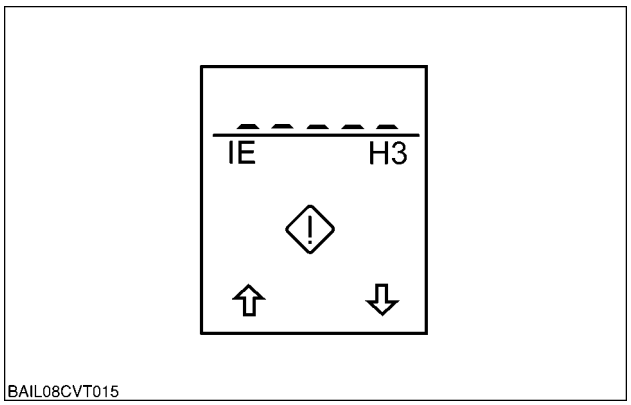

BAIL08CVT015 6

Scroll through the available options using the navigation “up" or “down" key.
"Factory" - factory error mode, displays all error codes for a period of 6 minutes then reverts to error code reduction (ECR).
"ECR" - error code reduction mode, only displays critical errors.
"Live" - live error code mode, displays all error codes.

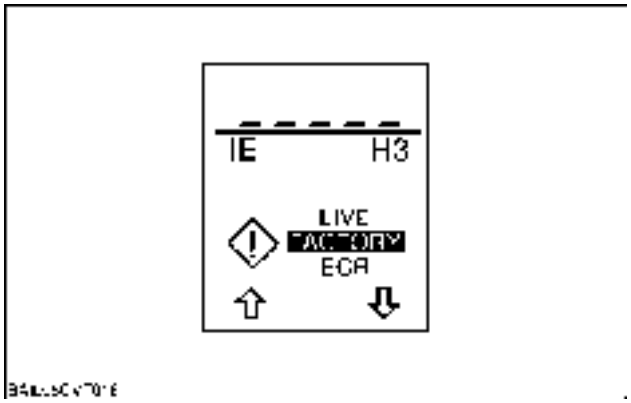

BAIL08CVT016 7

Depress and hold the navigation “up" or “down" key to store the selection, an audible tone will be heard to confirm the selection.
Depress the “menu" key to continue navigating through the “HH" menus.

https://tractormanualz.com/

STEERING SENSOR SELECTION OPTIONS

Select the steering sensor sub-system by depressing the “menu" key.

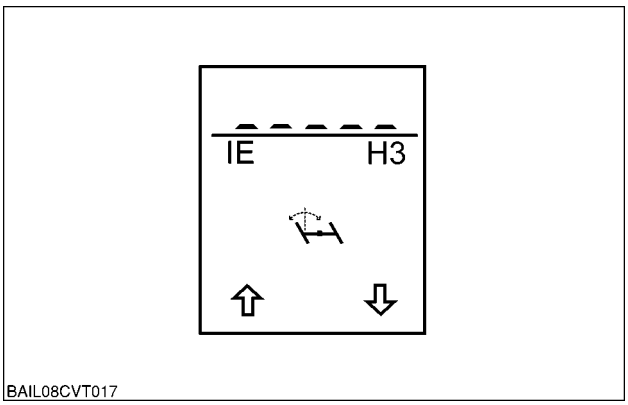

BAIL08CVT017 8

NOTE: *The default setting is “No" without steering sensor.*

Scroll through the available options using the navigation “up" or “down" key.

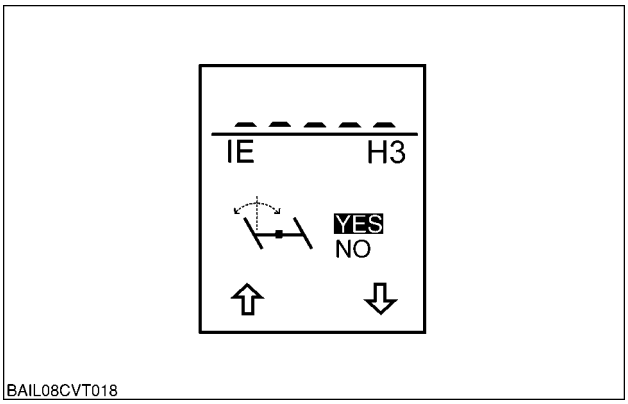

BAIL08CVT018 9

Depress and hold the navigation “up" or “down" key to store the selection, an audible tone will be heard to confirm the selection.
Depress the “menu" key to continue navigating through the “HH" menus.

https://tractormanualz.com/

AIR BRAKE OPTIONS

Select the air brake sub-system by depressing the “menu" key.

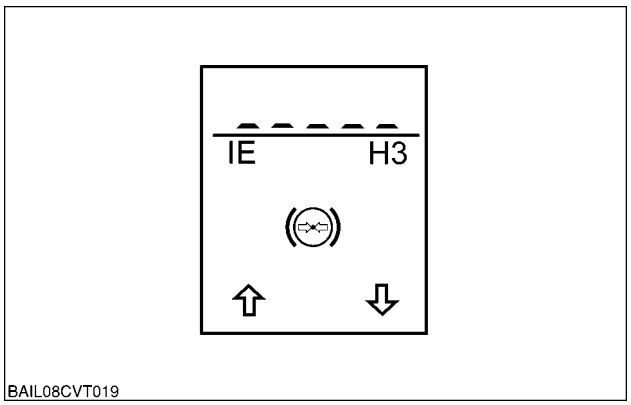

BAIL08CVT019 10

NOTE: *The default setting is “No" without air brakes.*

Scroll through the available options using the navigation “up" or “down" key.

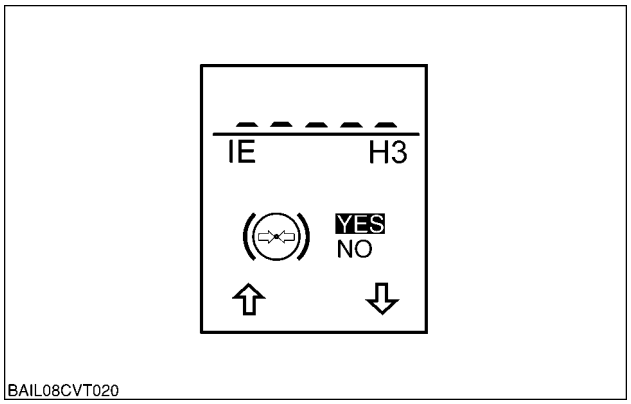

BAIL08CVT020 11

Depress and hold the navigation “up" or “down" key to store the selection, an audible tone will be heard to confirm the selection.
Depress the “menu" key to continue navigating through the “HH" menus.

https://tractormanualz.com/

Electronic Front Hitch Option

This section is used to configure the Electronic front hitch option.

Select the Electronic front hitch sub-system by depressing the “menu" key.

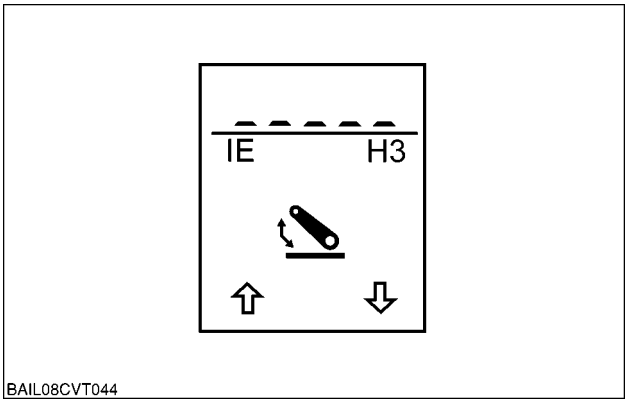

BAIL08CVT044 12

NOTE: *The default setting is “No". Electronic front hitch not present..*

Scroll through the available options using the navigation “up" or “down" key.

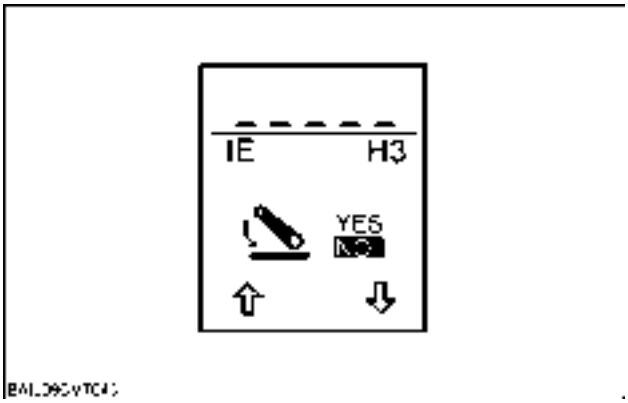

BAIL08CVT043 13

Depress and hold the navigation “up" or “down" key to store the selection, an audible tone will be heard to confirm the selection.
Depress the “menu" key to continue navigating through the “HH" menus.

https://tractormanualz.com/

H4 - VIEW SOFTWARE REVISION LEVEL

This menu displays the software release of the unit.

H4 Menu Screen Select Diagram

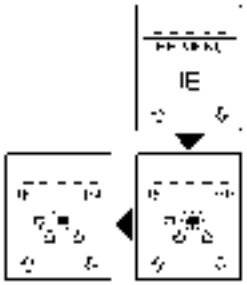

BAIL08CVT021 14

Select the H4 menu by depressing the “menu" key.

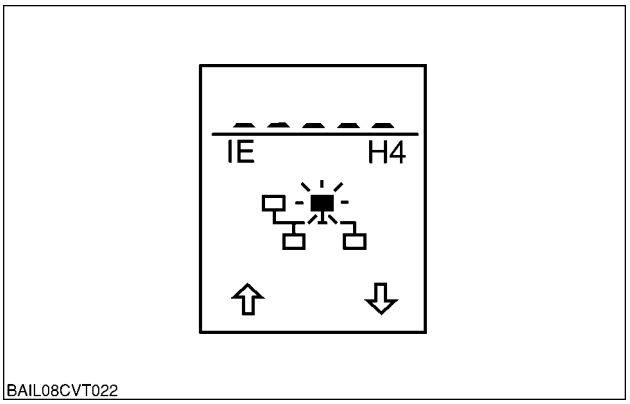

BAIL08CVT022 15

https://tractormanualz.com/

The display will automatically cycle through the software release as the example shown below, and will then return to allow navigation of the “HH" menus.

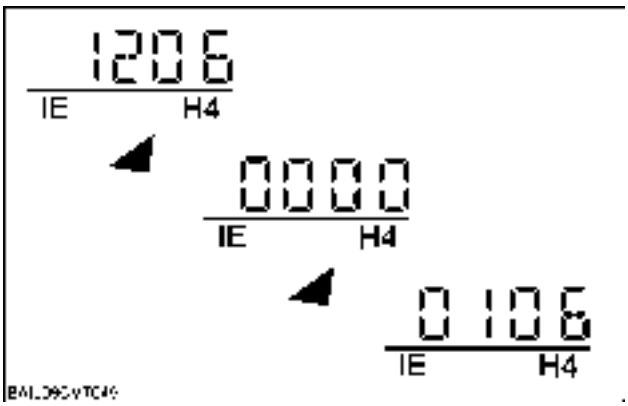

BAIL08CVT045 16

https://tractormanualz.com/

H5 - SWITCH OPERATION TEST

This menu displays a designated code when a switch transition is detected.

H5 Menu Screen Select Diagram

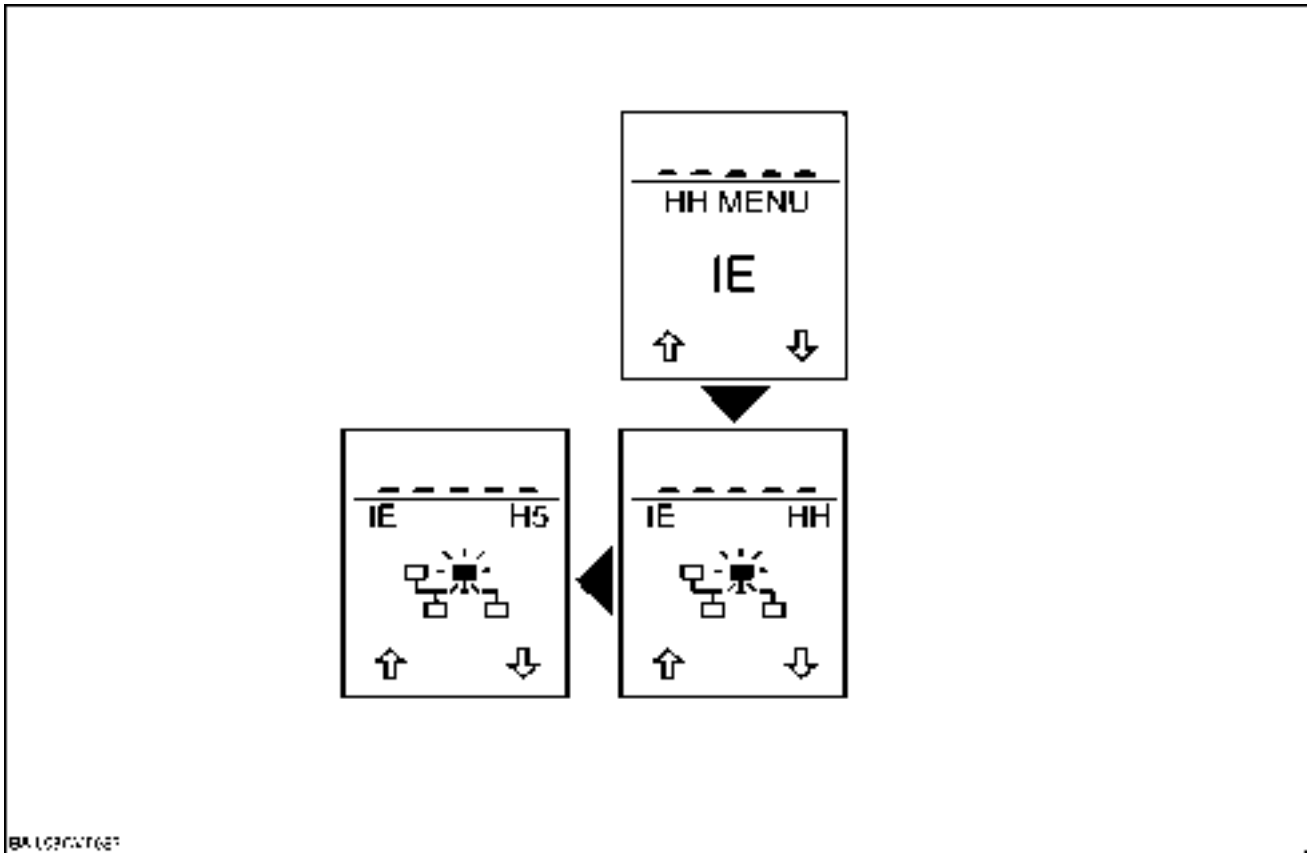

BAIL08CVT023 17

Select the H5 menu by depressing the “menu" key.

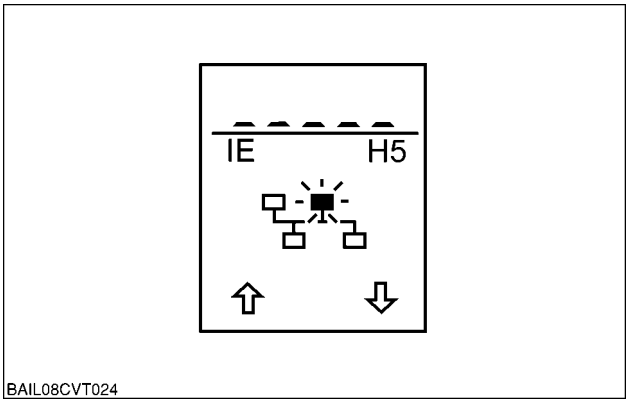

BAIL08CVT024 18

https://tractormanualz.com/

The top section of the display will display “d _ _".

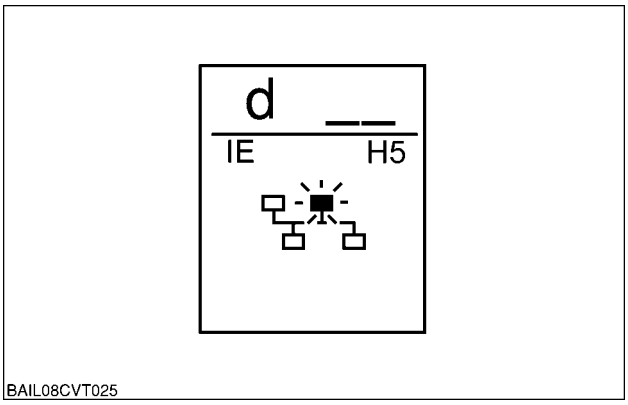

BAIL08CVT025 19

When a switch is operated, a code will be displayed and an audible tone should be heard to indicate the correct function.
If a switch code is not displayed and the audible tone not heard, a ’wiggle’ test can be performed on the related wiring while watching the display or listening for the audible tone, to help locate the fault.

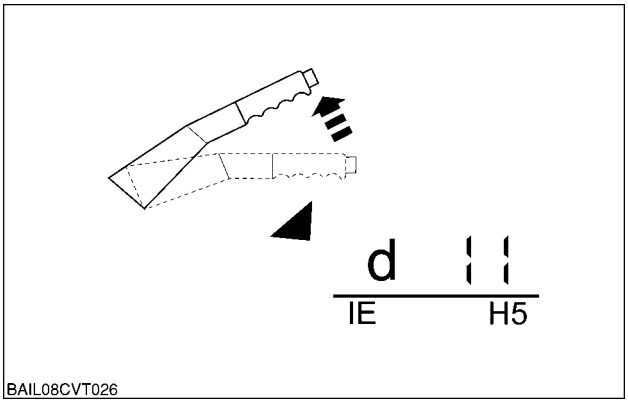

BAIL08CVT026 20

NOTE: *If the keystart switch is turned to the “crank" position, with the shuttle lever in neutral and the clutch pedal down, a switch disagreement error may occur.*

Identifier	Controller Connector	Pin Number	Switch / Input	Special Requirements
d0	No switch or two switches activated at the same time			-
d11	CN3	7	Handbrake switch	-
d66	CN3	18	Main high beam switch	-
d67	CN1	15	Side lights	-
d68	CN3	17	Brakes not latched (Japan ONLY)	-
d70	CN1	5	Left turn signal indicator	-
d71	CN1	6	Right turn signal indicator	-
d74	CN3	9	Exhaust brake switch	Not Applicable
d110	CN1	7	CAL/SEL switch (ADIC without keypad)	-

https://tractormanualz.com/

H8 - CLEAR ELECTRICAL ERASABLE PROGRAMMABLE READ ONLY MEMORY (EEPROM)

This menu clears calibration values and stored error codes by resetting all EEPROM values back to default. EEPROM is where all calibration values and error codes are stored. This memory is retained even if there is no power to the controller, i.e. if the battery is disconnected. There are two options available. "Clear net config" and "clear settings". "Clear net config" is used to erase the stored network configuration, this will clear the current configuration stored in the instrument cluster and rebuild the configuration at the next key ON. This should be used if the cluster has been changed or if the HH menus are showing modules which are not fitted to the machine.
"Clear settings" will return all instrument cluster settings back to their default setting.

NOTE: *To change any configuration settings H3 menu mode must be used. H8 will not affect these settings.*

NOTE: *To remove all stored error codes without erasing the calibration values use the HC menu.*

H8 Menu Screen Select Diagram

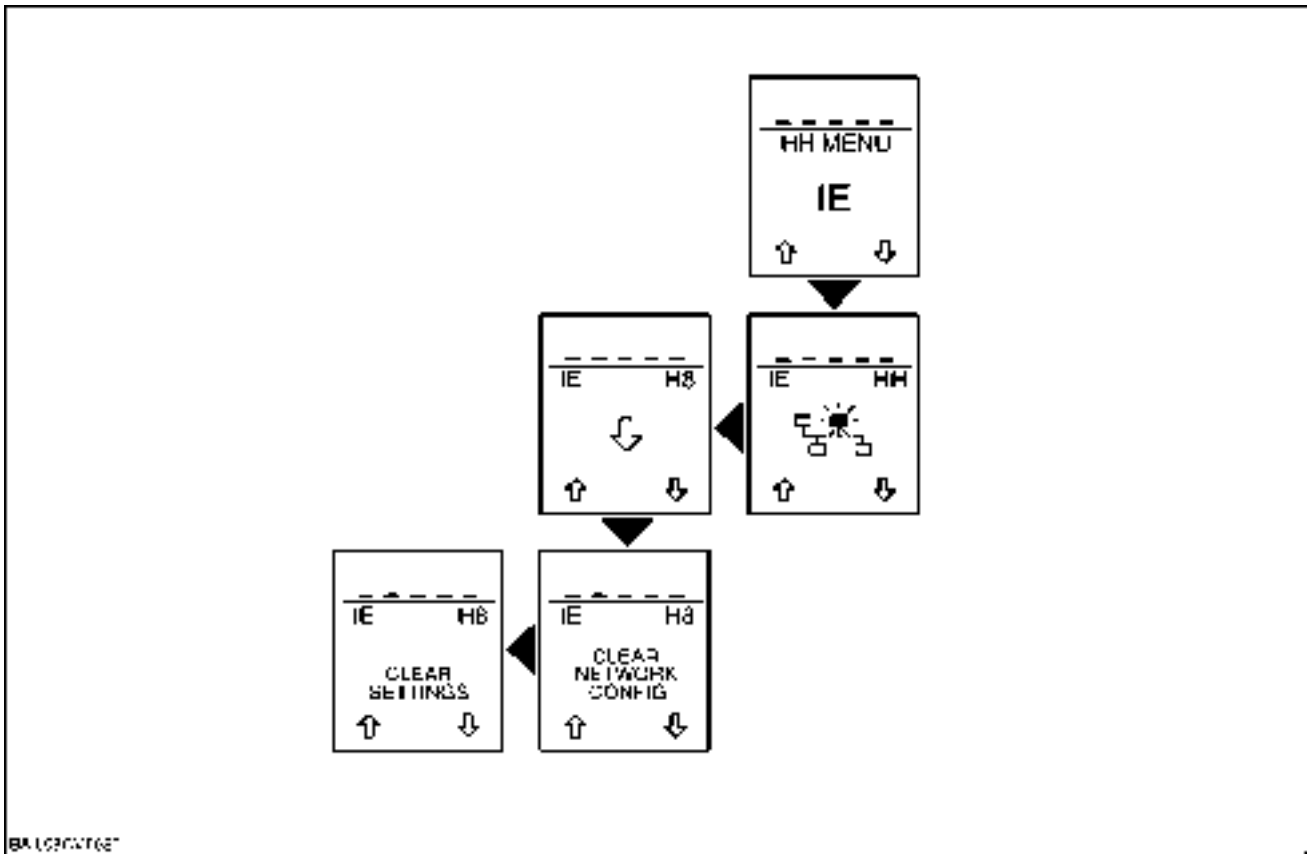

BAIL08CVT027 21

Select the H8 menu by depressing the “menu" key.
Scroll through the available options using the navigation “up" or “down" key.

Select "Clear Settings" by depressing the “menu" key

https://tractormanualz.com/

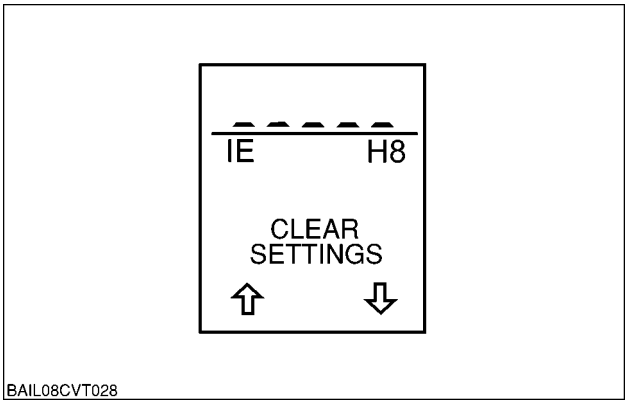

BAIL08CVT028 22

https://tractormanualz.com/

The top section of the display will display “EECL"

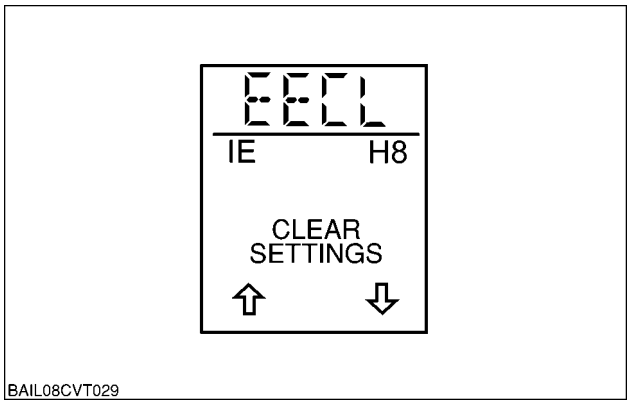

BAIL08CVT029 23

⚠ CAUTION ⚠

H8 will clear all calibrations values and stored error codes.

B006

NOTE: *If the navigation “down" key is released before the countdown finishes, the procedure will be aborted..*

Depress and hold the navigation “down" key to confirm the resetting of the EEPROM.
The top section of the display will countdown from 05 to 01, then “EE" will be displayed to indicate the EEPROM has been cleared.

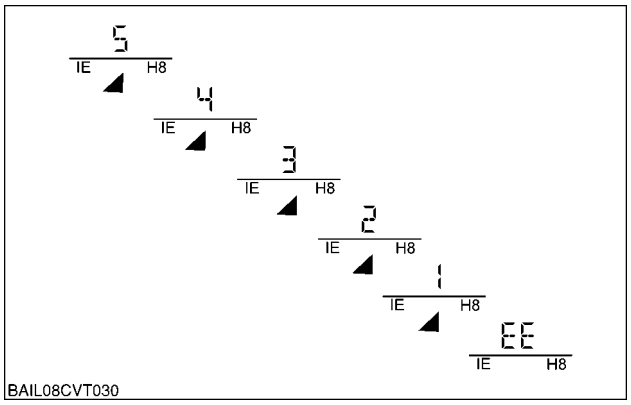

BAIL08CVT030 24

Turn the keystart OFF to exit H8.

NOTE: *The ’Clear Network Config’ .procedure is carried out in the same way as ’Clear Settings’*

https://tractormanualz.com/

H9 - VOLTMETER

This menu is used to verify the operation of various potentiometers, voltage supplies, and solenoid current circuits. If an intermittent fault is detected within a circuit, a 'wiggle' test can be performed on the related wiring while watching the display for sudden changes in values, to help locate the area where the fault exists.

NOTE: *The vehicle may be driven while in this menu.*

H9 Menu Screen Select Diagram

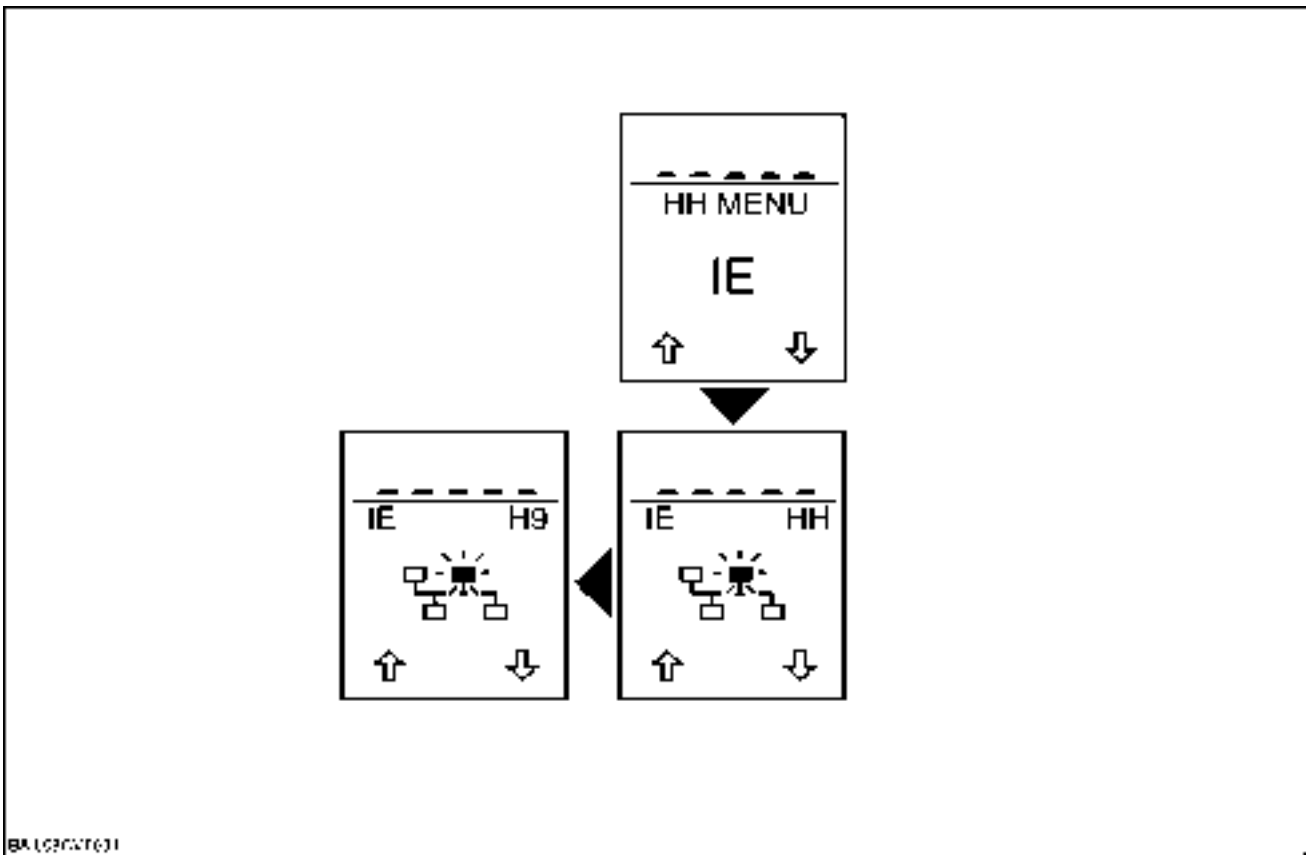

BAIL08CVT031 25

Select the H9 menu by depressing the "menu" key.

The top section of the display will display "ch _ _".

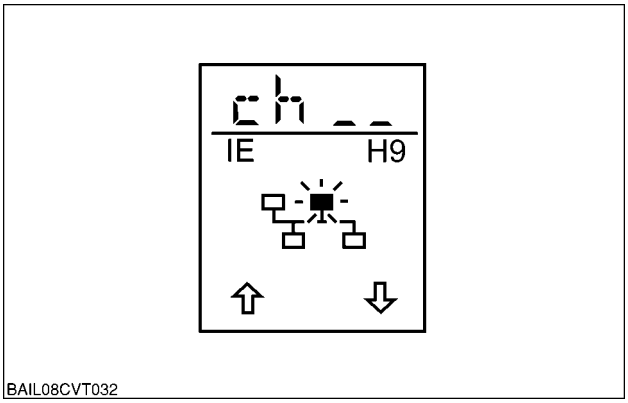

BAIL08CVT032 26

The required channel can be selected by using the navigation "up" and "down" keys.
After a delay the value will be displayed. Compare the value displayed with the typical reading shown in the table below.

NOTE: *The value is the input voltage or signal into the controller. This cannot be directly translated into a voltage due to the internal processes of the controller. A zero equates to* ***0 volts****.*

https://tractormanualz.com/

If the value displayed varies by more than **10 %** to that shown in the table below, a fault is indicated in either the component or the wiring harness relevant to that channel.

NOTE: *Check the connectors of the effected circuit, including the controller connectors, prior to replacing any components.*

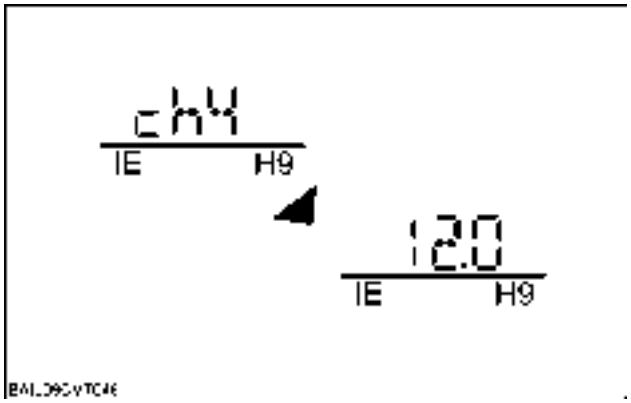

BAIL08CVT046 27

Channel	Description	Typical Reading	Notes
4	Programming voltage Vpp	12.0	See explanations below
5	+5 Volt sensor supply	5.0	
10	+12 Volt VT input	12.0 (voltage in Volts)	See explanations below
21	Steering angle potentiometer	23.0 full right lock 128.0 full left lock	
24	Air brake pressure	**9.0 bar**	Low pressure warning at **5.4 bar**
25	Fuel level sensor	30 - 270	30 = Full 270 = Empty
51	Vane pump	23.5	

Explanations:
Vpp Input: This is the input voltage into the controller to retain the volatile memory.
VT Input: This is a second input voltage into the controller.

https://tractormanualz.com/

HB - DISPLAY STORED FAULT CODES

This menu is used to display fault codes which are stored in the EEPROM of the controller.

HB Menu Screen Select Diagram

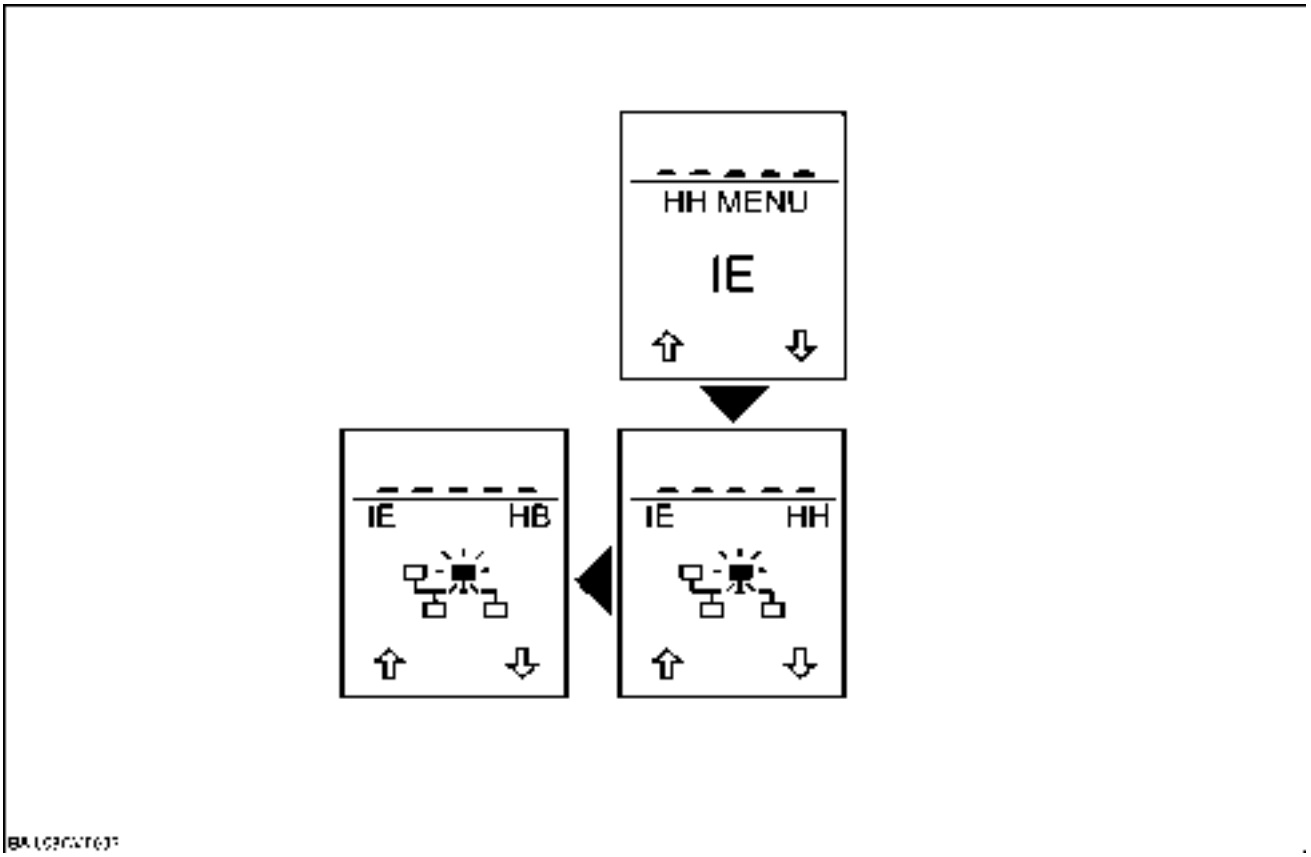

BAIL08CVT033 28

Select the HB menu by depressing the “menu" key.

"0" will flash in the top section of the display if no fault code is stored.

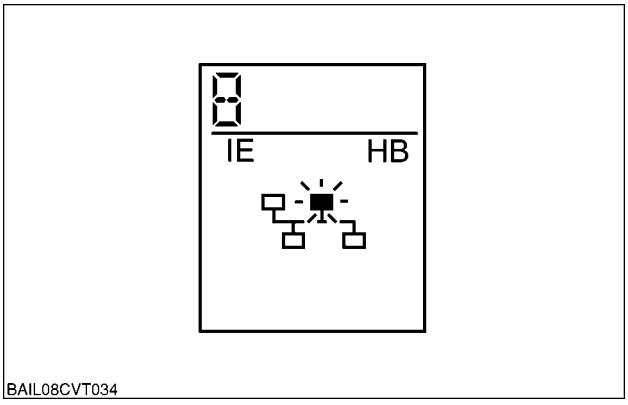

BAIL08CVT034 29

https://tractormanualz.com/

The top section of the display will cycle through the fault code, if a fault code is stored.
The following is an example fault code:
14900 Fault code
50 Hour of first occurrence
50 Hour of last occurrence
2 Number of occurrences of the fault

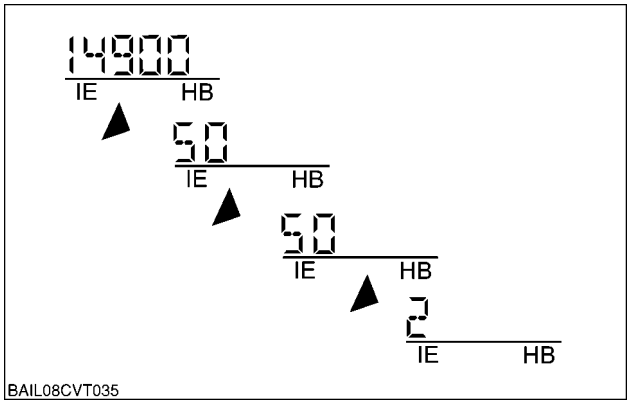

BAIL08CVT035 30

Depress the navigation “up" or “down" key to change to the next fault code in the list.
The top section of the display will display “_ _ _" at the end of the list.
Depress the “menu" key to continue navigating through the “HH" menus.

https://tractormanualz.com/

HC - CLEAR STORED FAULT CODES

HC Menu Screen Select Diagram

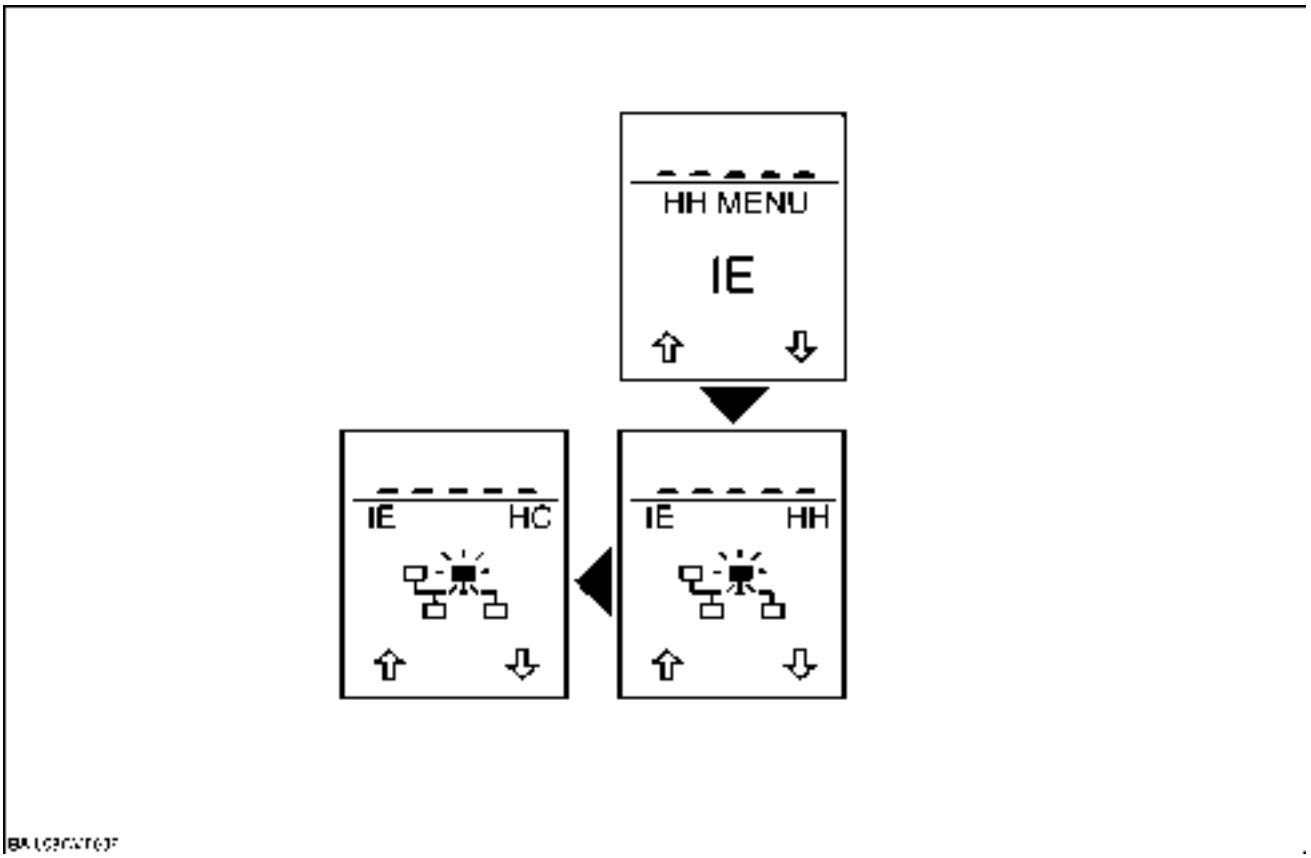

BAIL08CVT036 31

NOTE: *Always make a note of the fault codes stored, before clearing the memory.*

Select the HC menu by depressing the “menu" key.
The top section of the display will display “EE CL".

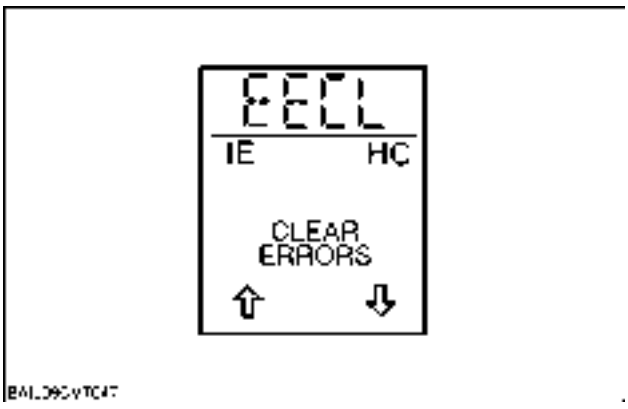

BAIL08CVT047 32

NOTE: *If the navigation “down" key is released before the countdown finishes, the procedure will be aborted.*

https://tractormanualz.com/

Depress and hold the navigation “down" key to confirm the clearing of the memory.
The top section of the display will countdown from 05 to 01, then “EE" will be displayed to indicate the fault codes have been cleared.
Depress the “menu" key to continue navigating through the “HH" menus.

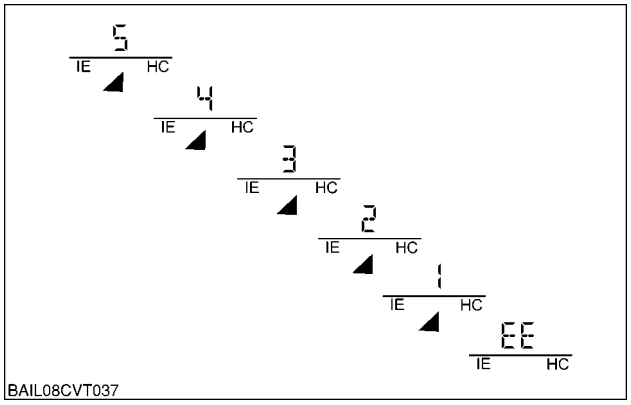

BAIL08CVT037 33

https://tractormanualz.com/

HE - DISPLAY ALL SPEED INPUTS

This menu is used to verify the operation of various frequency inputs.

NOTE: *The vehicle may be driven while in this menu.*

HE Menu Screen Select Diagram

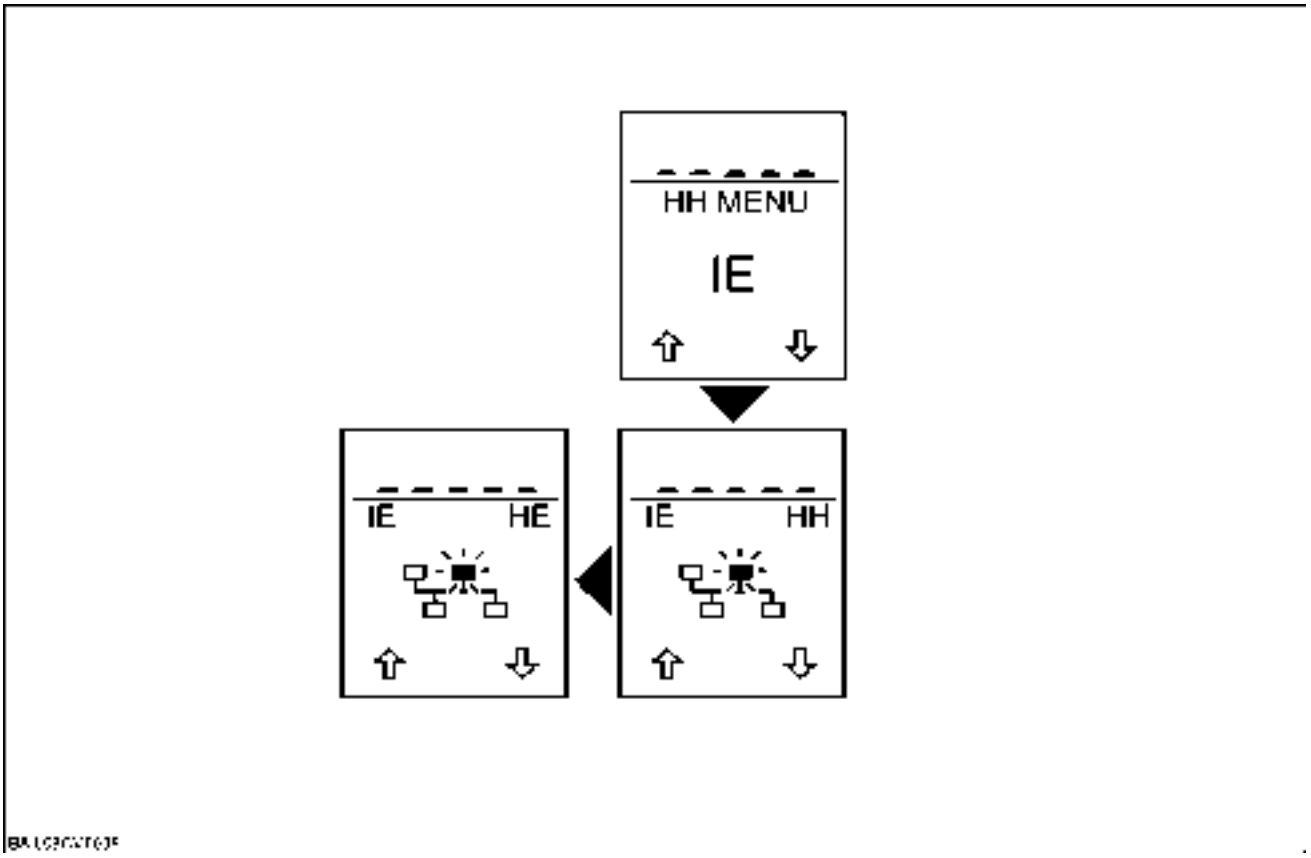

BAIL08CVT038 34

Select the HE menu by depressing the “menu" key.
The required channel can be selected by using the navigation “up" and “down" keys.
Refer to the table below for the available channels.
After a delay the value will be displayed.

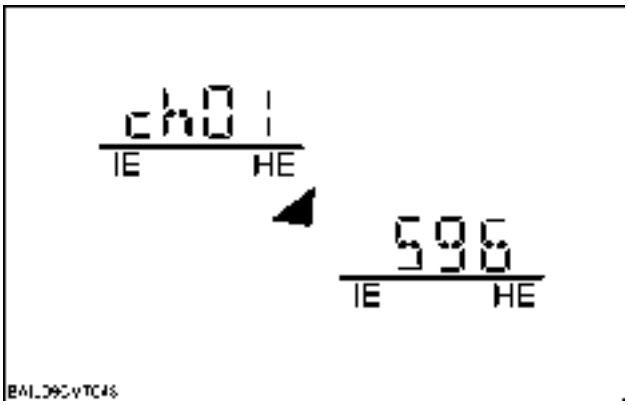

BAIL08CVT048 35

Depress the “menu" key to continue navigating through the “HH" menus.

Channel	Description	Typical Reading	Notes
1	H_Rec_status from EPL	**0 - 4000 Hz**.	

https://tractormanualz.com/

HF - VIEW CONTROLLER HARDWARE INFORMATION

This menu allows the hardware identification, hardware version and serial number to be displayed.

HF Menu Screen Select Diagram

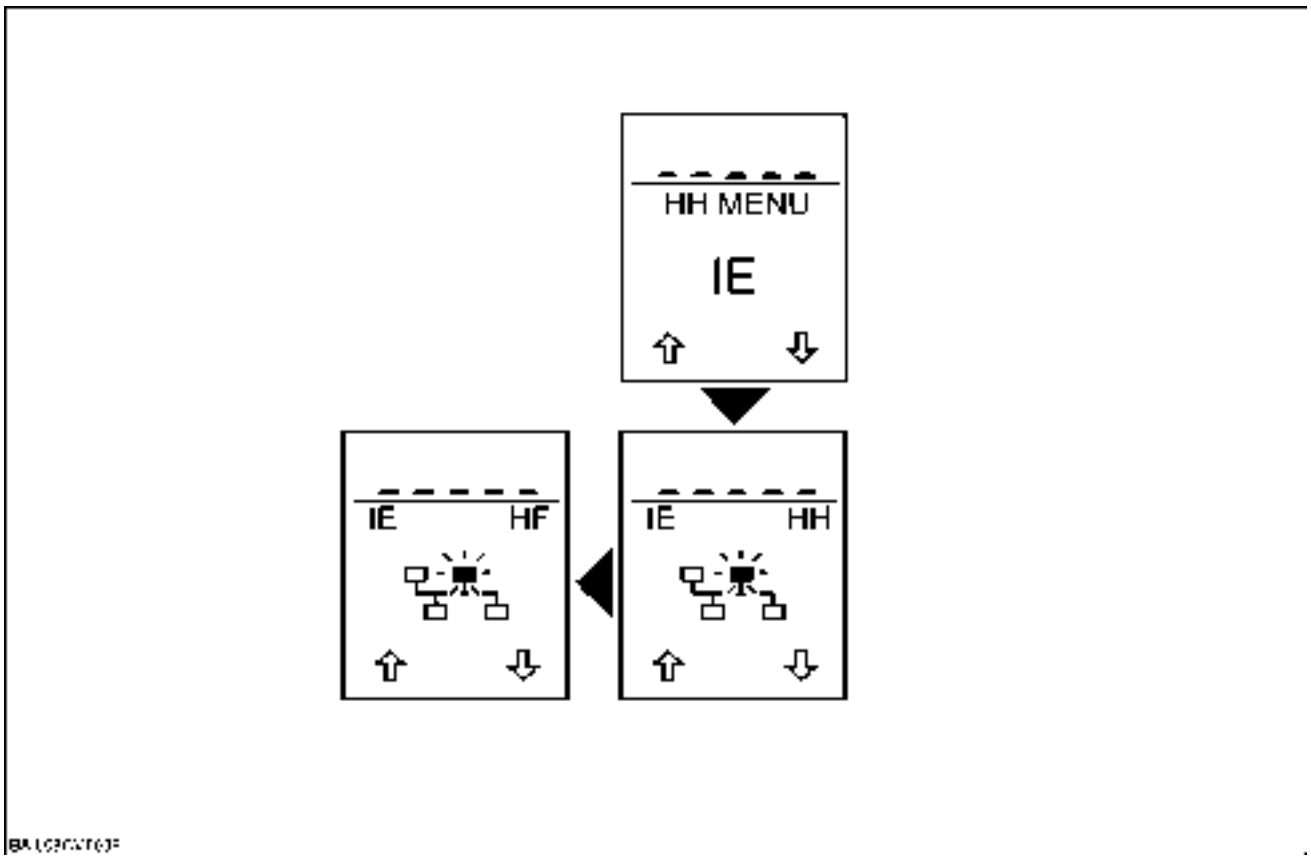

BAIL08CVT039 36

There is a sequence of six numbers. The first set indicates the hardware identification.
The second and third sets indicate the hardware version
The fourth, fifth and sixth sets indicate the 12 digit module serial number
562 Hardware identification
0000 0500 Hardware version
0000 0000 0000 Serial number
and return to allow navigation of the “HH" menus.

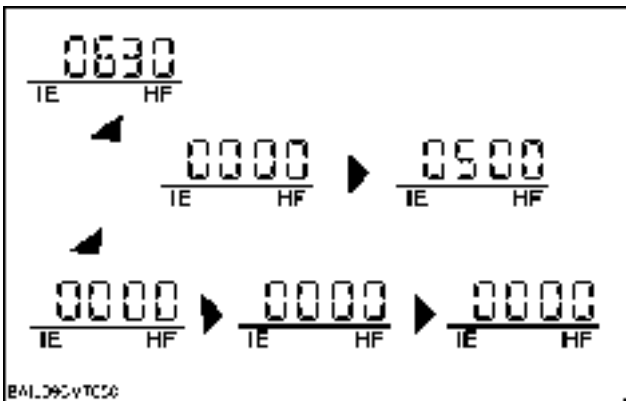

BAIL08CVT050 37

https://tractormanualz.com/

Control module - Configure - Front Axle Suspension, Rear Electronic Hydraulic Remote Valves, Front PTO, Front Hitch

RM Control Module

HH	Service Menu	Figure Number
H1	Calibration procedures	**1**
H2	View stored calibration values	**2**
H3	Configurations	**9**
H4	View software revision level	**25**
H5	Switch operation test	**28**
H6	Not used	-
H7	Not used	-
H8	Clear Electrically Erasable Programmable Read Only Memory (EEPROM)	**32**
H9	Voltmeter	**36**
HA	Demonstration mode	**40**
HB	Display stored fault codes	**44**
HC	Clear all stored fault codes	**48**
HD	Not used	-
HE	Display frequency inputs	**52**
HF	View controller hardware information	**55**
HJ	Electronic hydraulic remote control valve set-up	**58**
HK	CNH Electronic hydraulic remote control valve diagnostic functions	**62**

https://tractormanualz.com/

H1 - CALIBRATION PROCEDURES

This menu is used to calibrate:

1. Electronic Hydraulic Remote levers. Refer to **PRIMARY HYDRAULIC POWER SYSTEM Electro-hydraulic remote valve - Calibrate (A.10.C)**.
2. Front axle suspension. Refer to **Control valve - Calibrate (D.40.C)**.
3. Front hitch. Refer to **HITCH Front hitch - Calibrate (H.10.B)**.

H1 Menu Screen Select Diagram

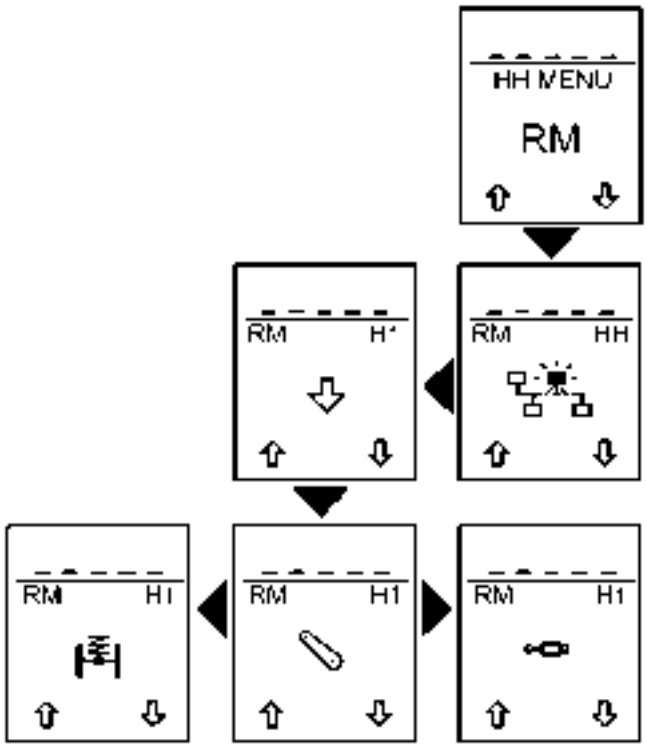

BAIL08CVT051 1

https://tractormanualz.com/

H2 - VIEW STORED CALIBRATION VALUES

This menu is used to display the calibration values stored in the controllers for:

1. Electronic Hydraulic Remote levers
2. Front axle suspension
3. Front hitch

H2 Menu Screen Select Diagram

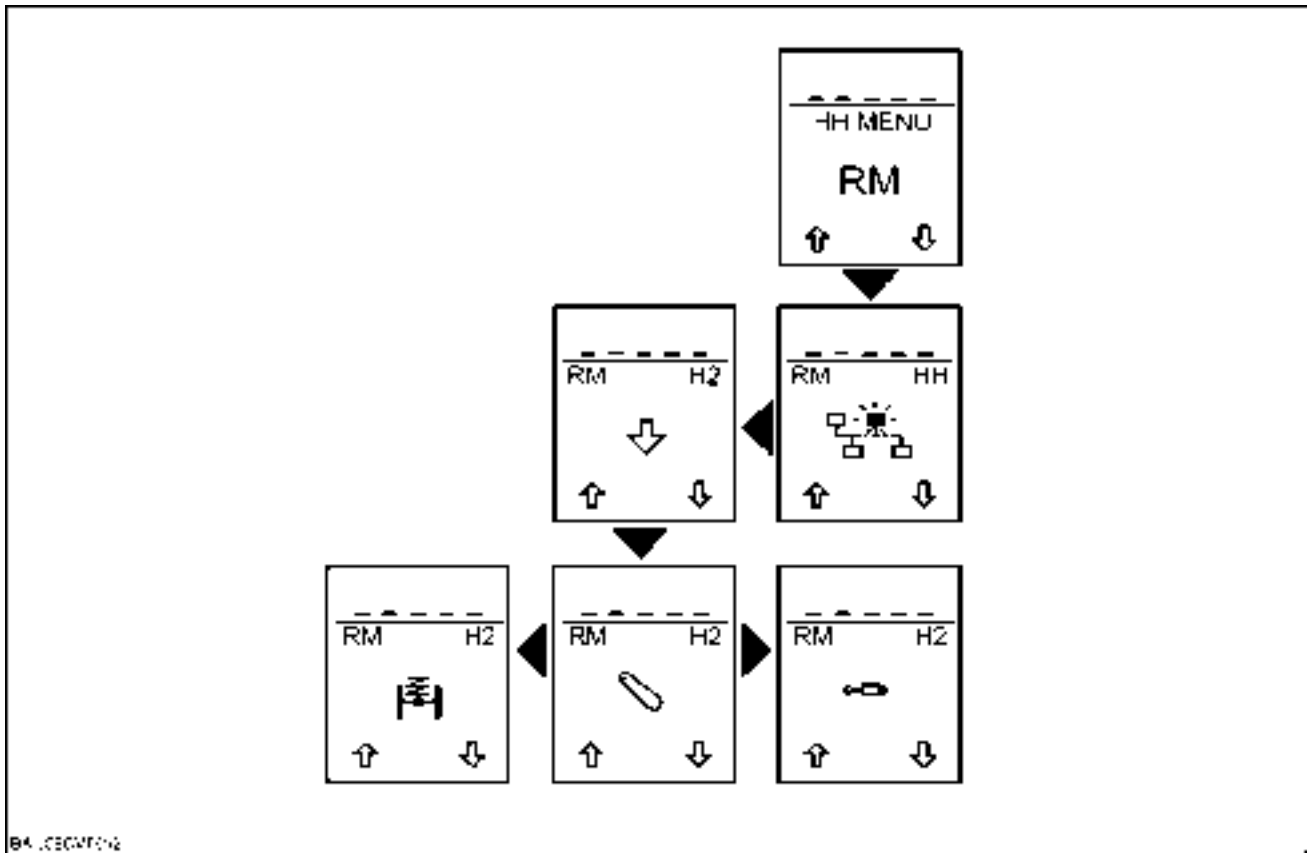

BAIL08CVT052 2

https://tractormanualz.com/

ELECTRONIC HYDRAULIC REMOTE LEVER VALUES

Select the electronic hydraulic remote sub-system by depressing the "menu" key.

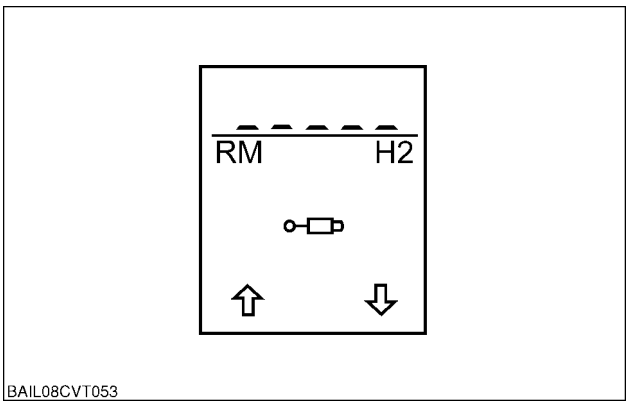

BAIL08CVT053 3

The upper section of the display will display "ch - -".
The required channel can be selected by using the navigation "up" and "down" keys.

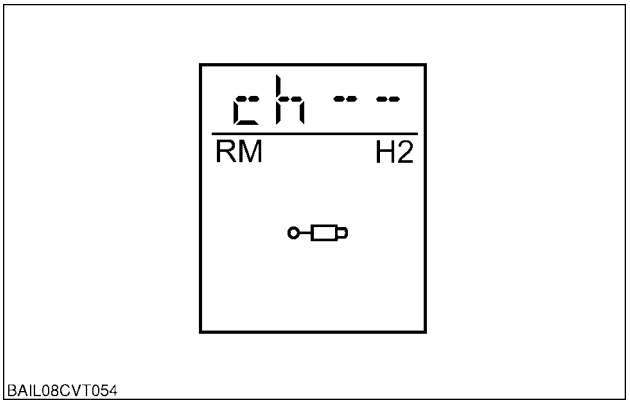

BAIL08CVT054 4

After a delay the code followed by the calibration value will be displayed, (refer to the table below for the description of each channel).
Depress the "menu" key to continue navigating through the "HH" menus.

Channel	Description	Code	Value Range
Ch 1	Lever 1 - Neutral position	n	520 - 560
	Lever 1 - Float position	F	0 - 20
	Lever 1 - Lower (retract) position	L	160- 220
	Lever 1 - Raise (extend) position	R	890 - 930
Ch 2	Lever 2 - Neutral position	n	520 - 560
	Lever 2 - Float position	F	0 - 20
	Lever 2 - Lower (retract) position	L	160- 220
	Lever 2 - Raise (extend) position	R	890 - 930
Ch 3	Lever 3 - Neutral position	n	520 - 560
	Lever 3 - Float position	F	0 - 20
	Lever 3 - Lower (retract) position	L	160- 220
	Lever 3 - Raise (extend) position	R	890 - 930
Ch 4	Lever 4 - Neutral position	n	520 - 560
	Lever 4 - Float position	F	0 - 20
	Lever 4 - Lower (retract) position	L	160- 220
	Lever 4 - Raise (extend) position	R	890 - 930

https://tractormanualz.com/

FRONT AXLE SUSPENSION VALUES

Select the front axle suspension sub-system by depressing the "menu" key.

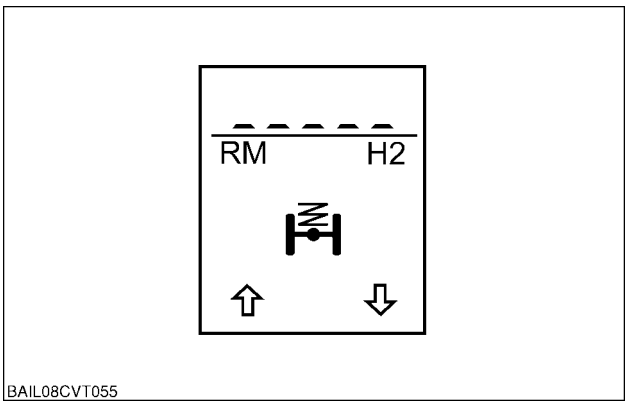

BAIL08CVT055 5

The upper section of the display will display "ch - -".
The required channel can be selected by using the navigation "up" and "down" keys.

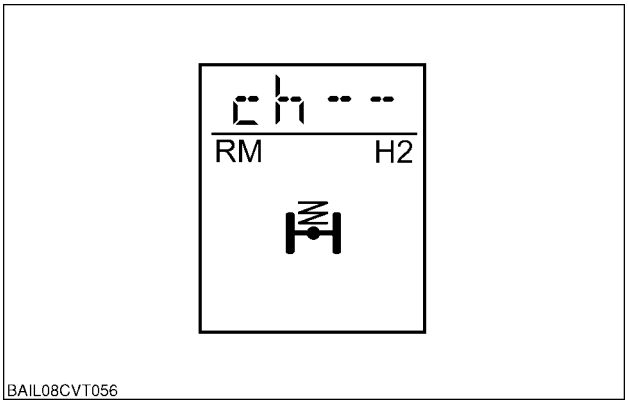

BAIL08CVT056 6

After a delay the code followed by the calibration value will be displayed, (refer to the table below for the description of each channel).
Depress the "menu" key to continue navigating through the "HH" menus.

Channel	Description	Code	Value Range
Ch 1	Front axle upper limit	u	512 - 972
	Front axle lower limit	d	150 - 512

https://tractormanualz.com/

FRONT HITCH VALUES

Select the front hitch sub-system by depressing the "menu" key.

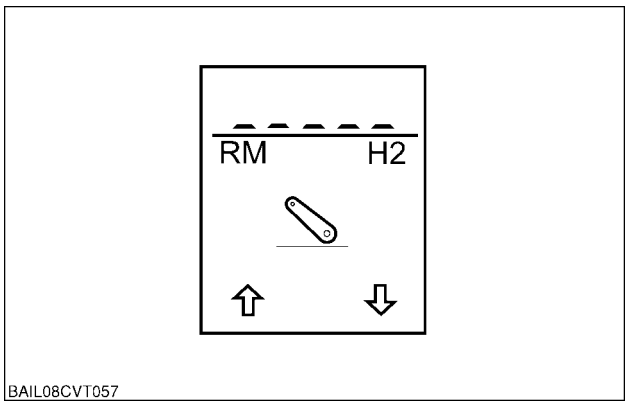

BAIL08CVT057 7

The upper section of the display will display "ch - - ".
The required channel can be selected by using the navigation "up" and "down" keys.

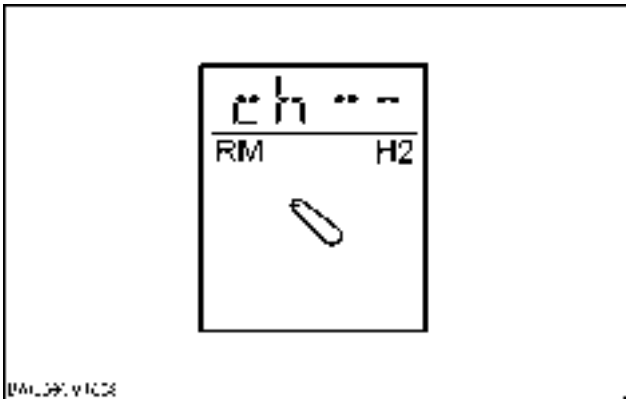

BAIL08CVT058 8

After a delay the code followed by the calibration value will be displayed, (refer to the table below for the description of each channel).
Depress the "menu" key to continue navigating through the "HH" menus.

Channel	Description	Code	Value Range
Ch 1	Front hitch upper limit	u	700 - 963
	Front hitch lower limit	d	41 - 400

https://tractormanualz.com/

H3 - CONFIGURATIONS

Used to display the configurations available for:

1. Electronic Hydraulic Remotes (EHR)
   - Ch.1 Enable / Disable EHR
   - Ch.2 Not used
   - Ch.3 Not used
   - Ch.4 Number of EHR's present - setup
   - Ch.5 Enable / Disable top and side link control
2. Front Axle Suspension
   - Ch.1 Enable / Disable front axle suspension
3. Front Hitch
   - Ch.1 Enable / Disable front hitch
   - Ch.2 Enable / Disable front hitch fender switches
4. Front PTO
   - Ch.1 Enable / Disable front PTO

H3 Menu Screen Select Diagram

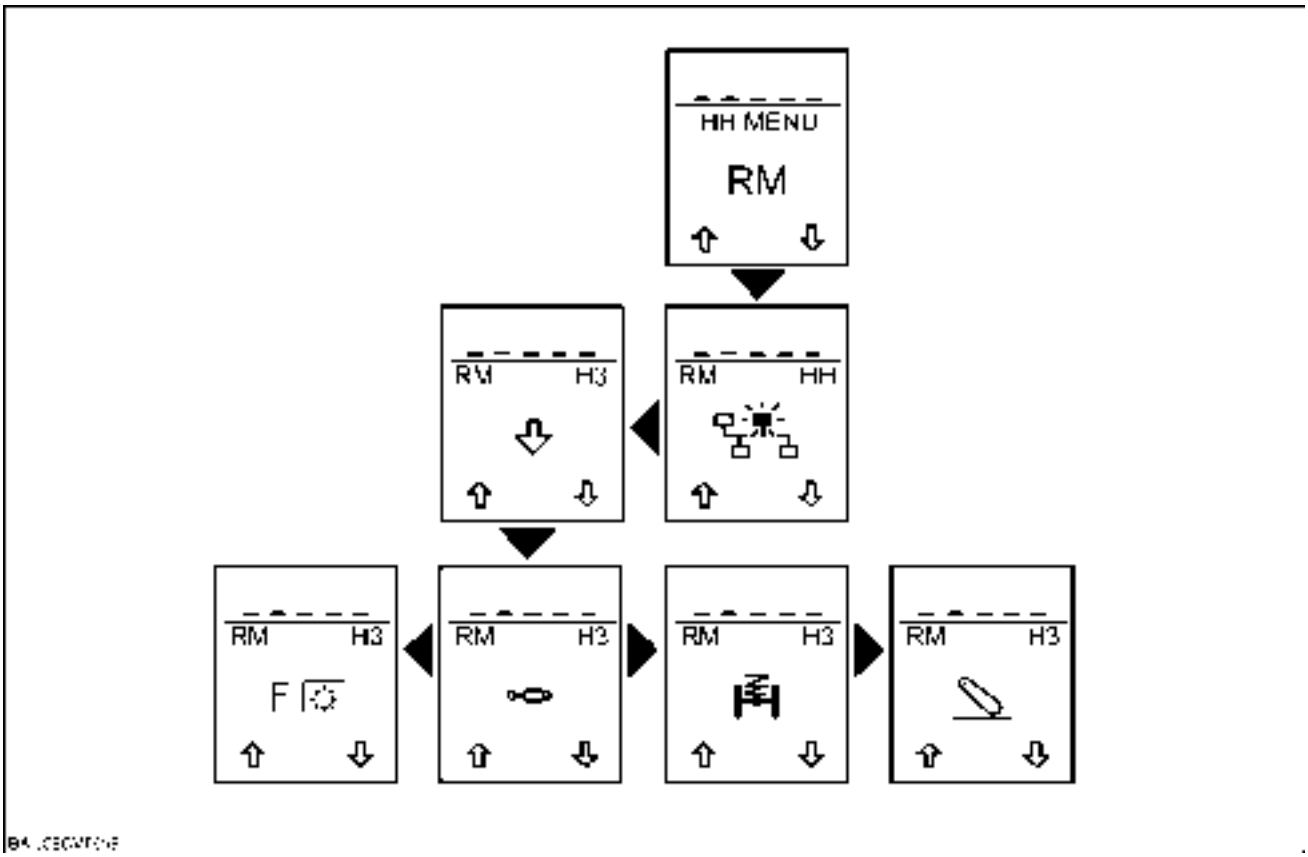

BAIL08CVT059 9

https://tractormanualz.com/

ELECTRONIC HYDRAULIC REMOTES (EHR) OPTIONS

Select the EHR sub-system by depressing the "menu" key.

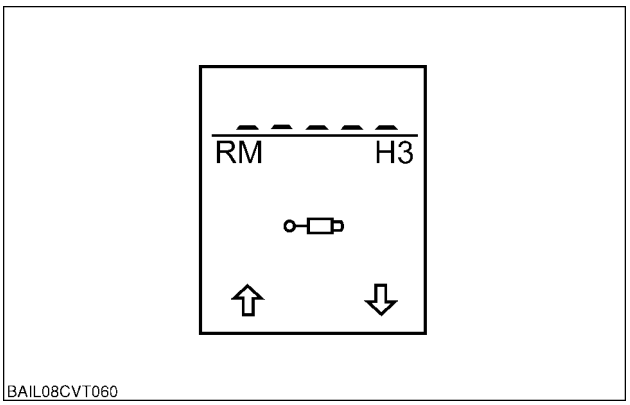

BAIL08CVT060 10

The lower central display will display "ch - -".
The required channel can be selected by using the "h" and "m" keys.

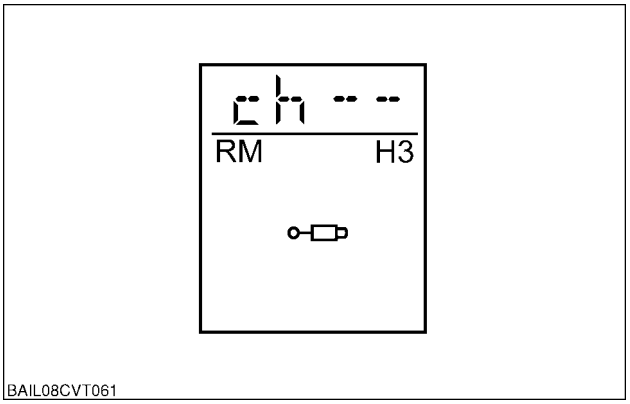

BAIL08CVT061 11

After a delay the current setting will be displayed. (see the table below for the description of each channel).

Channel	Description
Ch 1	Enable / Disable rear EHR
Ch 2	Not Used
Ch 3	Not Used
Ch 4	Number of EHR’s present - setup
Ch 5	Enable / Disable top and side link control

https://tractormanualz.com/

Channel 1 - Enable / Disable Rear EHR

Scroll through the available options using the navigation "up" or "down" key.

The options available are:

- YES - Enable Rear EHR
- NO - Disable Rear EHR

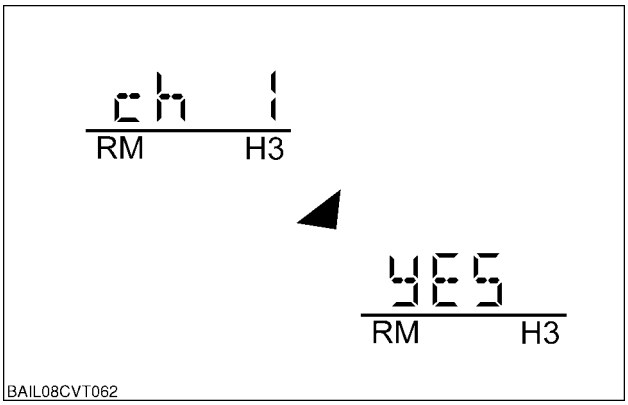

BAIL08CVT062 12

To save the desired option, depress and hold the navigation "up" or "down" key until the instrument cluster bleeps, indicating that the selection has been saved.

Depress the "menu" key to continue navigating through the "HH" menus.

Channel 2 - Not Used

This channel is not used

Channel 3 - Not Used

This channel is not used.

https://tractormanualz.com/

Channel 4- Number of EHR’s Present - Setup

When a new module is installed or the H8 procedure is completed, automatic detection for the number of remotes is used. If at any time the number of fitted remotes needs to be changed then this setup channel is used.

Scroll through the available options using the navigation "up" or "down" key.

The options available are:

- 2
- 3
- 4
- 5

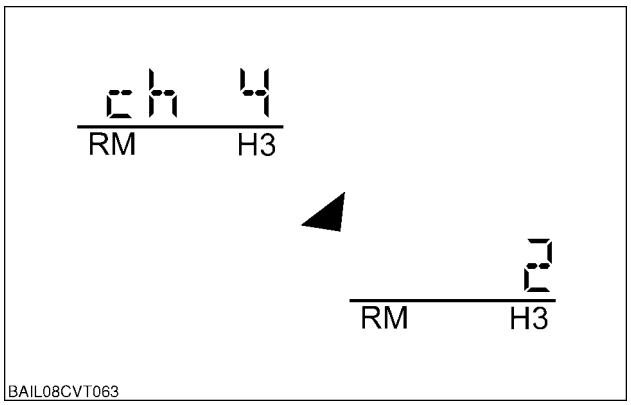

BAIL08CVT063 13

To save the desired option, depress and hold the navigation "up" or "down" key until the instrument cluster bleeps, indicating that the selection has been saved.

Depress the "menu" key to continue navigating through the "HH" menus.

https://tractormanualz.com/

Channel 5- Enable / Disable Top and Side Link Control

Scroll through the available options using the navigation "up" or "down" key.

The options available are:

- YES - Enable top/side link control
- NO - Disable top/side link control

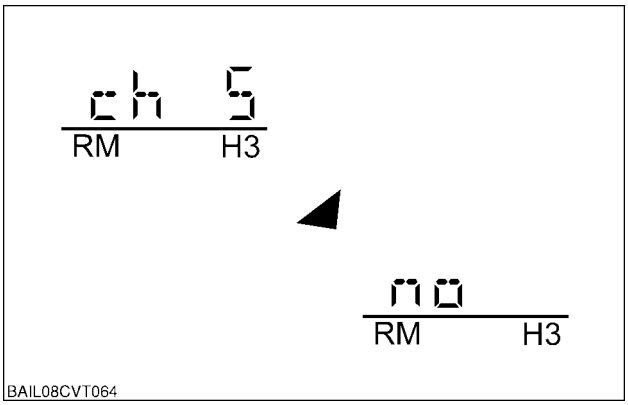

BAIL08CVT064 14

To save the desired option, depress and hold the navigation "up" or "down" key until the instrument cluster bleeps, indicating that the selection has been saved.

Depress the "menu" key to continue navigating through the "HH" menus.

https://tractormanualz.com/

FRONT AXLE SUSPENSION OPTIONS

Select the front axle suspension sub-system by depressing the "menu" key.

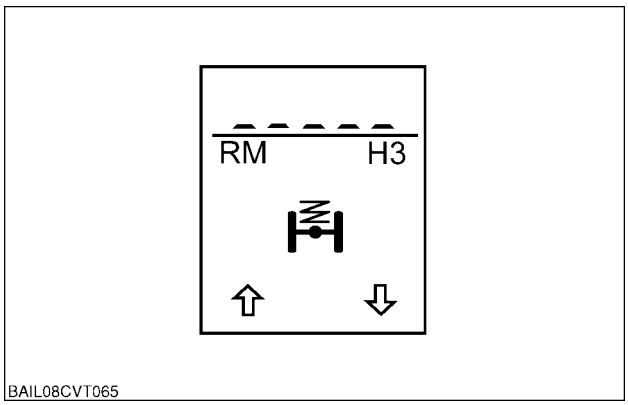

BAIL08CVT065 15

The upper section of the display will display "ch - -".
The required channel can be selected by using the navigation "up" and "down" keys.

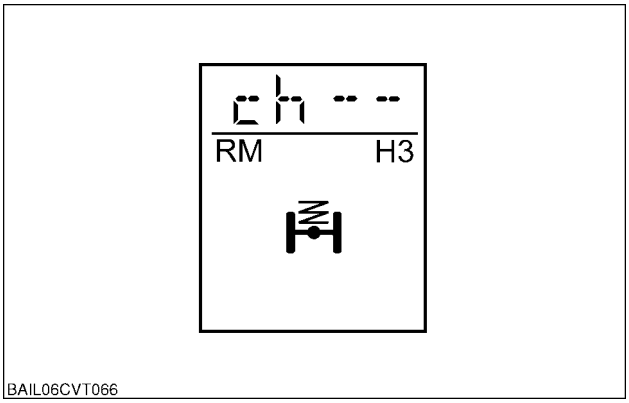

BAIL08CVT066 16

After a delay the current setting will be displayed. (see the table below for the description of the channel).

Channel	Description
Ch 1	Enable / Disable front axle suspension

https://tractormanualz.com/

Channel 1 - Enable / Disable Front Axle Suspension

Scroll through the available options using the navigation "up" or "down" key.

The options available are:

- YES - Enable front axle suspension
- NO - Disable front axle suspension

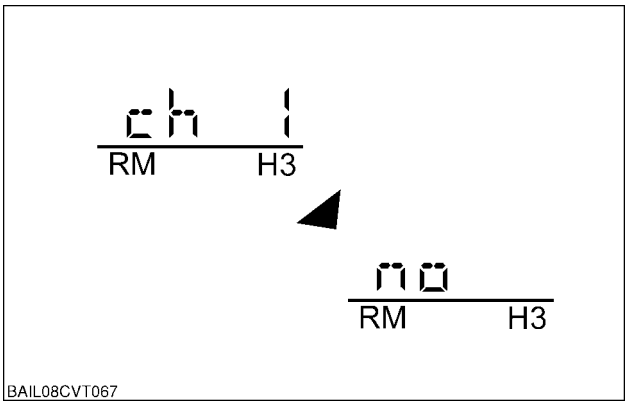

BAIL08CVT067 17

To save the desired option, depress and hold the navigation "up" or "down" key until the instrument cluster bleeps, indicating that the selection has been saved.

Depress the "menu" key to continue navigating through the "HH" menus.

https://tractormanualz.com/

FRONT HITCH OPTIONS

Select the front hitch sub-system by depressing the "menu" key.

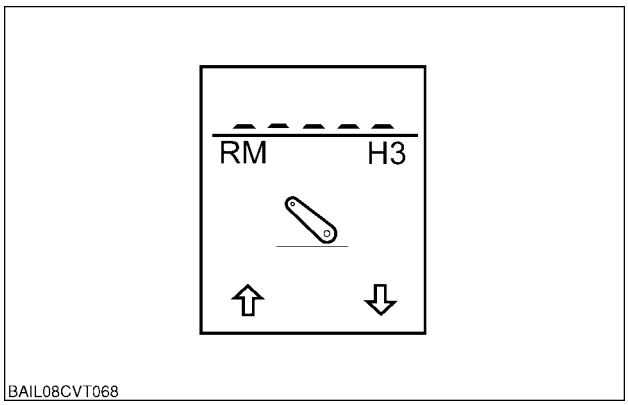

BAIL08CVT068 18

The upper section of the display will display "ch - -".
The required channel can be selected by using the navigation "up" and "down" keys.

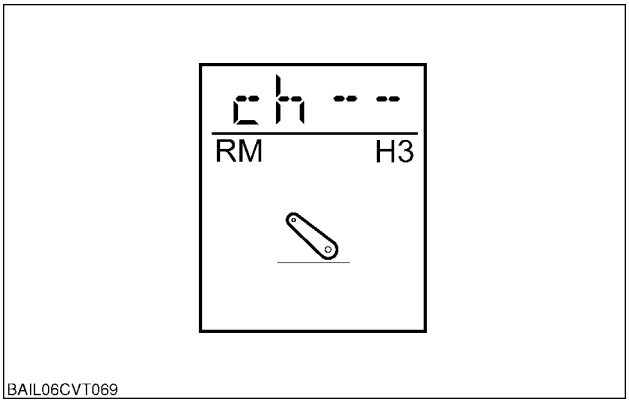

BAIL08CVT069 19

After a delay the current setting will be displayed. (see the table below for the description of the channel).

Channel	Description
Ch 1	Enable / Disable front hitch
Ch 2	Enable / Disable front hitch fender switches

https://tractormanualz.com/

Channel 1 - Enable / Disable Front Hitch

Scroll through the available options using the navigation "up" or "down" key.

The options available are:

- YES - Enable front hitch
- NO - Disable front hitch

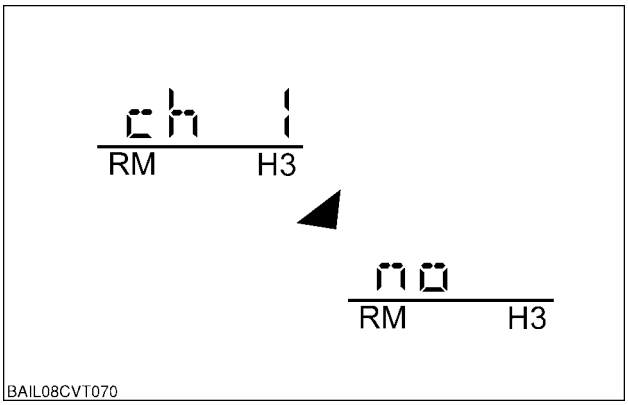

BAIL08CVT070 20

To save the desired option, depress and hold the navigation "up" or "down" key until the instrument cluster bleeps, indicating that the selection has been saved.

Depress the "menu" key to continue navigating through the "HH" menus.

Channel 2 - Enable / Disable Front Hitch Fender Switches

Scroll through the available options using the navigation "up" or "down" key.

The options available are:

- YES - Enable front hitch fender switches
- NO - Disable front hitch fender switches

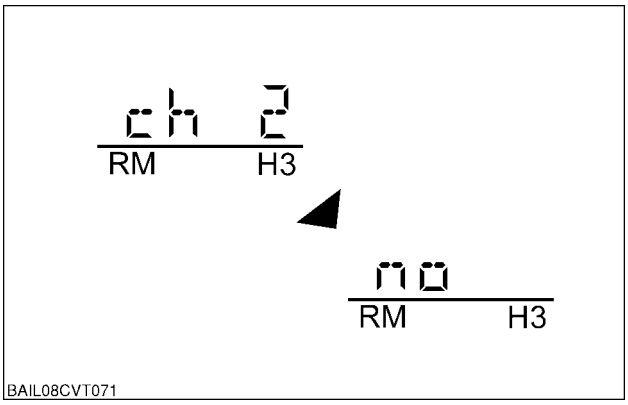

BAIL08CVT071 21

To save the desired option, depress and hold the navigation "up" or "down" key until the instrument cluster bleeps, indicating that the selection has been saved.

Depress the "menu" key to continue navigating through the "HH" menus.

https://tractormanualz.com/

FRONT PTO OPTIONS

Select the front PTO sub-system by depressing the "menu" key.

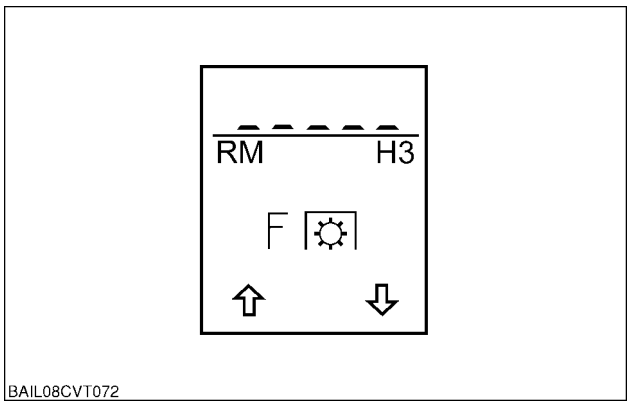

BAIL08CVT072 22

The upper section of the display will display "ch - -".
The required channel can be selected by using the navigation "up" and "down" keys.

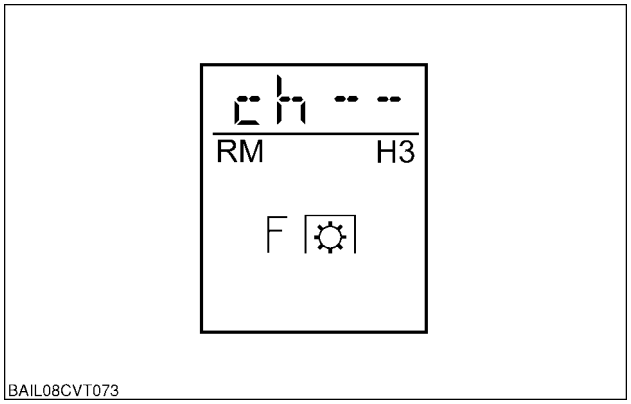

BAIL08CVT073 23

After a delay the current setting will be displayed. (see the table below for the description of each channel).

Channel	Description
Ch 1	Enable / Disable front PTO

Channel 1- Enable / Disable Front PTO

Scroll through the available options using the navigation "up" or "down" key.

The options available are:

- YES - Enable front PTO
- NO - Disable front PTO

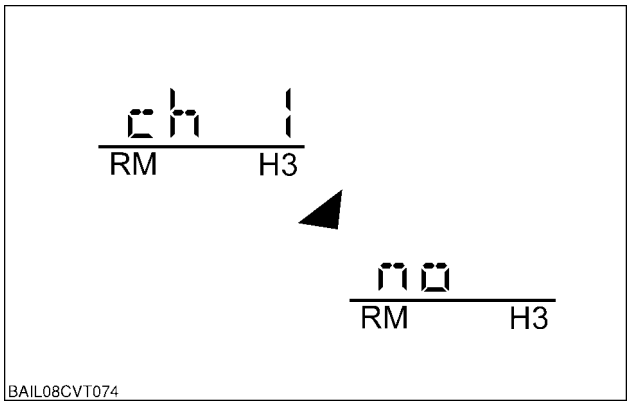

BAIL08CVT074 24

https://tractormanualz.com/

To save the desired option, depress and hold the navigation "up" or "down" key until the instrument cluster bleeps, indicating that the selection has been saved.

Depress the "menu" key to continue navigating through the "HH" menus.

https://tractormanualz.com/

H4 - VIEW SOFTWARE REVISION LEVEL

Common to all sub-systems.

H4 Menu Screen Select Diagram

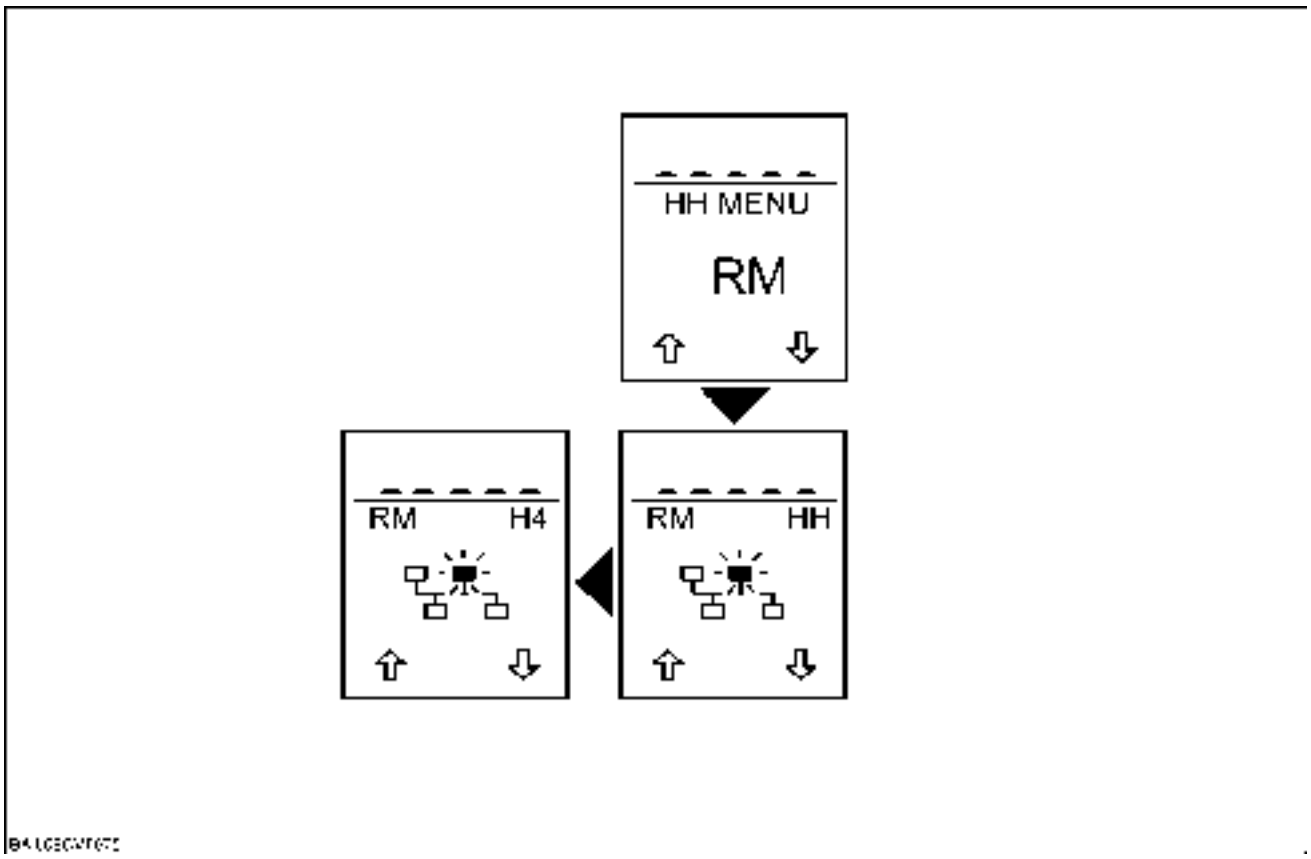

BAIL08CVT075 25

Select the H4 menu by depressing the "menu" key.

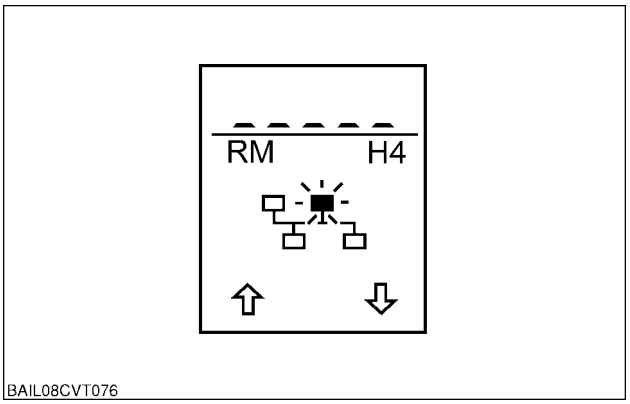

BAIL08CVT076 26

https://tractormanualz.com/

The upper section of the display will automatically cycle through the software release, as the example shown and return to allow navigation of the "HH" menus.

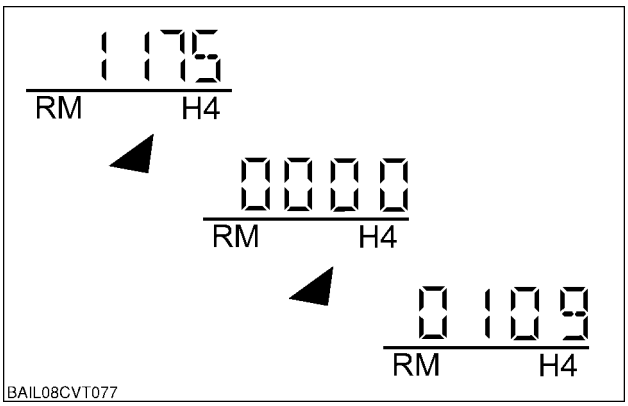

BAIL08CVT077 27

https://tractormanualz.com/

H5 - SWITCH OPERATION TEST

This menu displays a designated code when a switch transition is detected.
Common to all sub-systems.

H5 Menu Screen Select Diagram

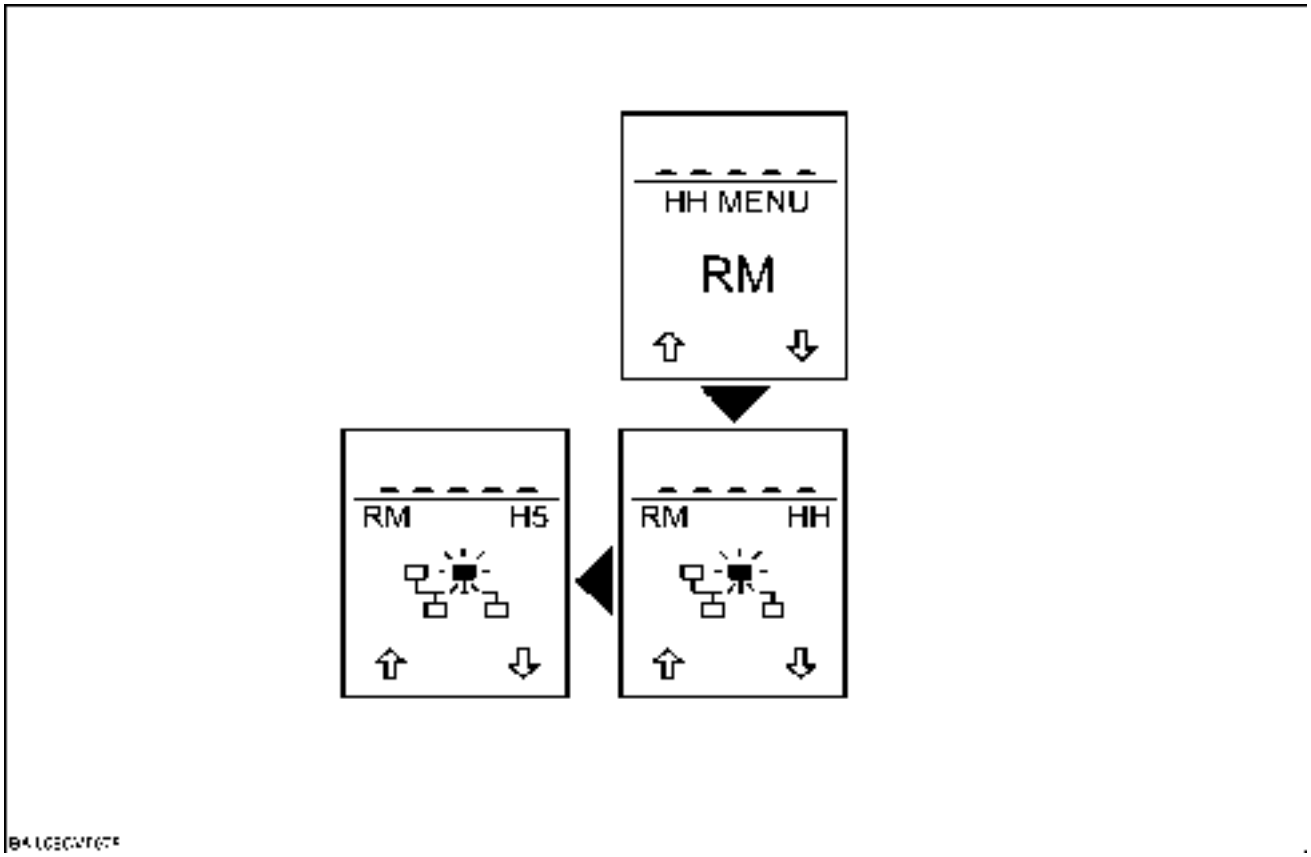

BAIL08CVT078 28

Select the H menu by depressing the "menu" key.

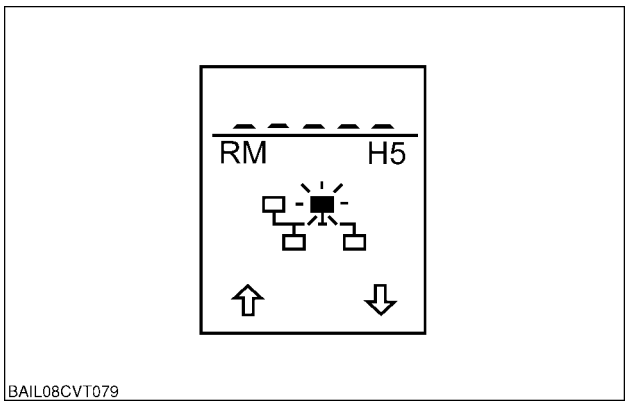

BAIL08CVT079 29

https://tractormanualz.com/

The upper section of the display will display "d_ _"

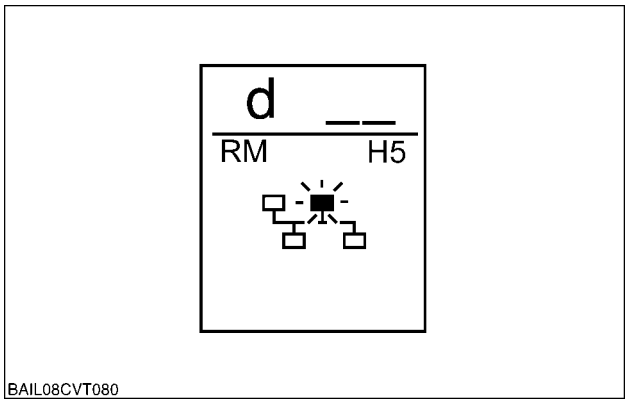

BAIL08CVT080 30

When a switch is operated, a code will be displayed and an audible tone should be heard to indicate the correct function.
If a switch code is not displayed and the audible tone not heard, a 'wiggle' test can be performed on the related wiring, while watching the display or listening for the audible tone, to help locate the fault.

NOTE: *If the keystart switch is turned to the "crank" position, with the shuttle lever in neutral and the clutch pedal down, a switch disagreement error may occur.*

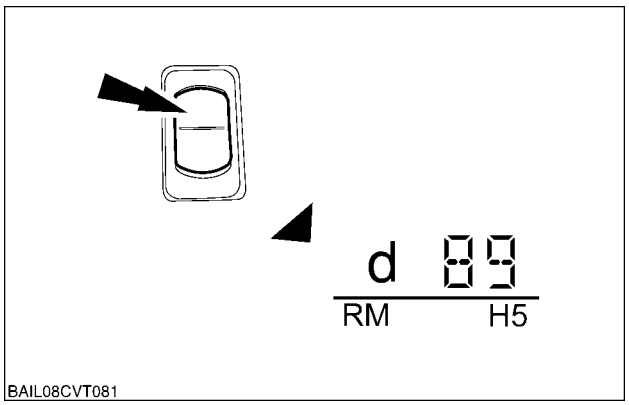

BAIL08CVT081 31

Identifier	Controller Connector	Pin Number	Switch / Input	Special Requirements
d0	No switch or two switches activated at the same time			-
d8	CN1B	21	Crank detect switch	-
d69	CN1B	23	Front suspension pressure switch	-
d75	via CAN		Right hand link extend switch	-
d76	via CAN		Right hand link retract switch	-
d77	CN1B	22	Front hitch external common switch	-
d78	CN1B	26	Front hitch external raise switch	-
d79	CN1B	19	Front hitch external lower switch	-
d89	via CAN		Front suspension lock switch	-
d90	CN1B	11	Front PTO switch (normally open)	-
d91	CN1B	12	Front PTO switch (normally closed)	-
d92	via CAN		Front hitch height limit switch	-
d95	via CAN		EHR No. 1 program/motor mode switch	-
d96	via CAN		EHR No. 2 program/motor mode switch	-
d97	via CAN		EHR No. 3 program/motor mode switch	-
d98	via CAN		EHR No. 4 program/motor mode switch	-
d108	via CAN		Top link extend switch	-
d109	via CAN		Top link retract switch	-

https://tractormanualz.com/

Identifier	Con-troller Connec-tor	Pin Number	Switch / Input	Special Requirements
d159	via CAN		EHR flow encoder switch	-
d165	via CAN		EHR float switch	-
d178	via CAN		EHR 1 extend switch (on hand controller)	-
d179	via CAN		EHR 1 retract switch (on hand controller)	-
d180	via CAN		EHR 2 extend switch on hand controller)	-
d181	via CAN		EHR 2 retract switch (on hand controller)	-
d183	CN3A	16	EHR 3 extend switch (on rear fender)	-
d184	CN3A	17	EHR 3 retract switch (on rear fender)	-

https://tractormanualz.com/

H8 - CLEAR ELECTRICAL ERASABLE PROGRAMMABLE READ ONLY MEMORY (EEPROM)

This menu clears calibration values and stored error codes by resetting all EEPROM values back to default. EEPROM is where all calibration values and error codes are stored. This memory is retained even if there is no power to the controller, i.e. if the battery is disconnected.

NOTE: *H8 will not change the configuration settings. The H3 menu mode must be used for this.*

NOTE: *To erase only the stored error codes and not affect the calibration data use the HC menu mode.*

H8 Menu Screen Select Diagram

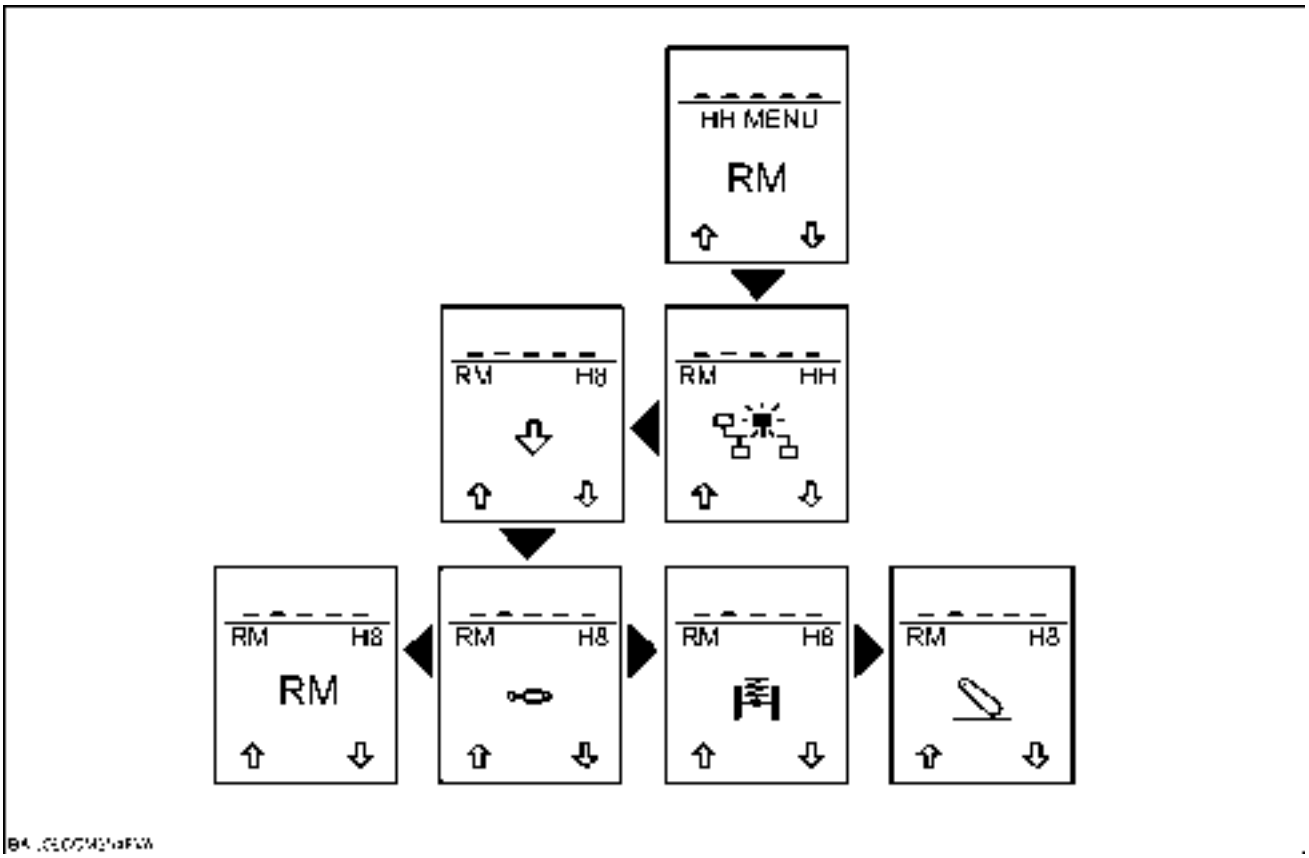

BAIL08CVT082 32

IMPORTANT: *By selecting the screen display with the controller identifier "RM" displayed this will reset the EEPROM in all the sub-systems.*

If only a specific sub-system EEPROM requires to be reset, select the sub-system that requires the EEPROM to be reset by depressing the "menu" key, as the example shown.

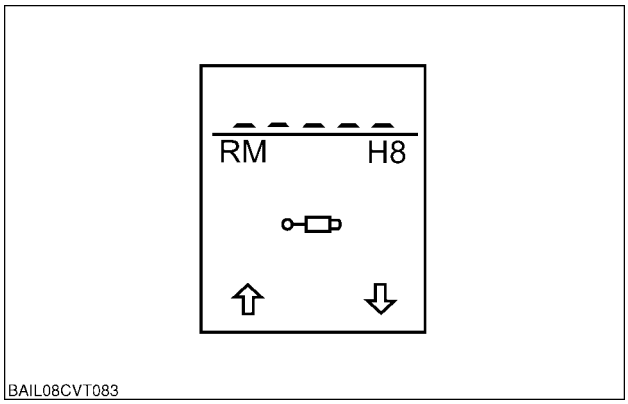

BAIL08CVT083 33

https://tractormanualz.com/

The upper section of the display will display "EECL".

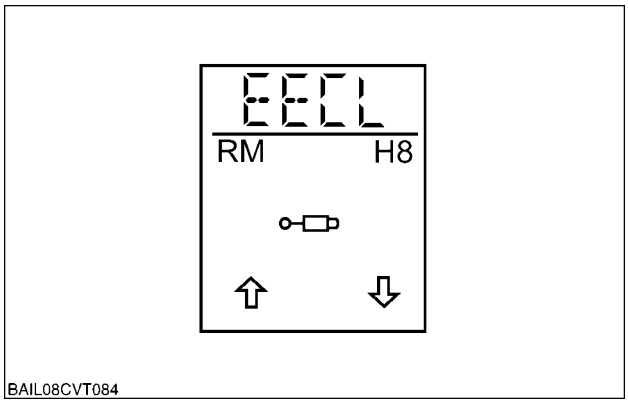

BAIL08CVT084 34

⚠ CAUTION ⚠

H8 will clear all calibrations values and stored error codes.

B006

Depress and hold the navigation "down" key to confirm the resetting of the EEPROM.
The upper section of the display will countdown from 5 to 1, then "EE" will be displayed to indicate the EEPROM has been cleared.

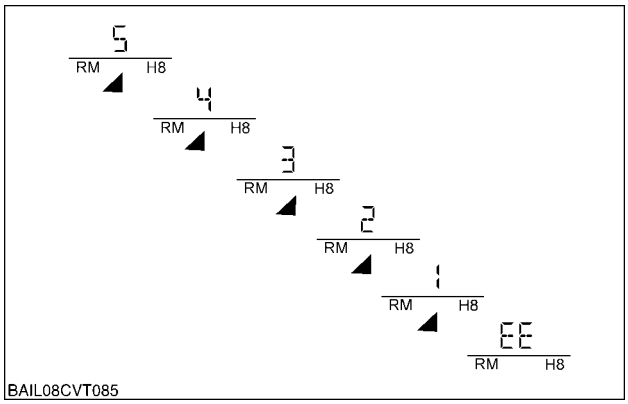

BAIL08CVT085 35

NOTE: *If the "down" key is released before the countdown finishes, the procedure will be aborted.*

Turn the keystart OFF.

https://tractormanualz.com/

H9 - VOLTMETER

This menu is used to verify the operation of various potentiometers, voltage supplies, and solenoid current circuits. If an intermittent fault is detected within a circuit, a 'wiggle' test can be performed on the related wiring while watching the display for sudden changes in values, to help locate the area where the fault exists.

NOTE: *The vehicle may be driven while in this menu.*

Common to all sub-systems.

H9 Menu Screen Select Diagram

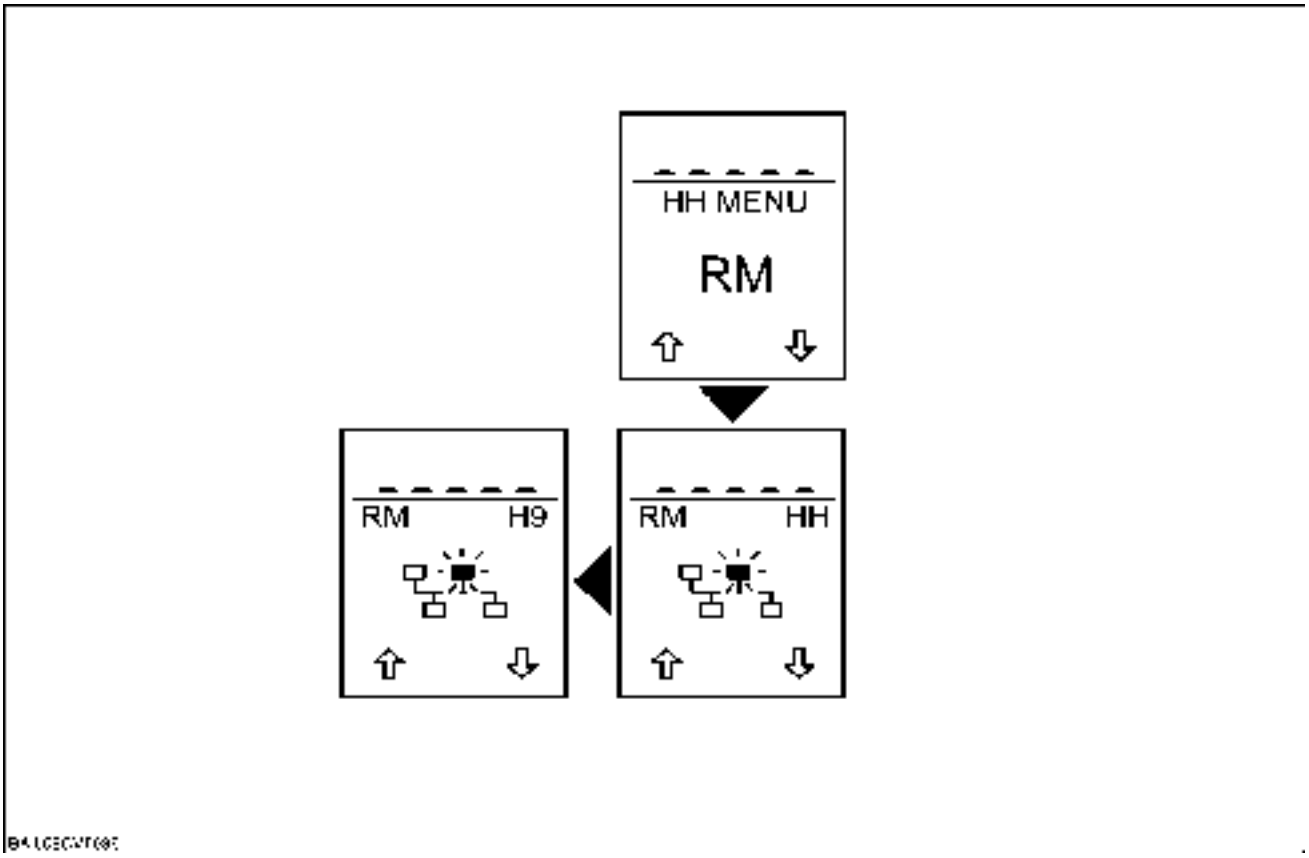

BAIL08CVT086 36

Select the H9 menu by depressing the "menu" key.

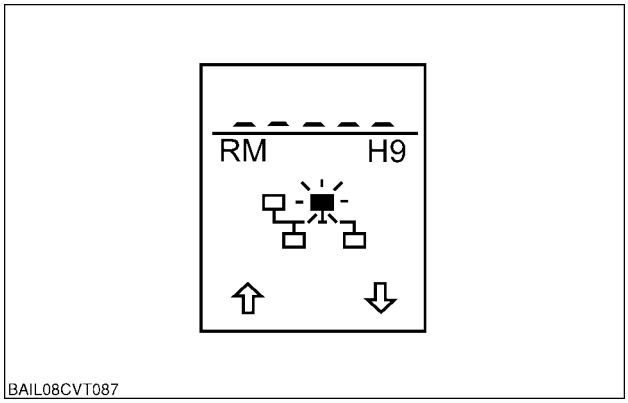

BAIL08CVT087 37

https://tractormanualz.com/

The upper section of the display will display "ch - -"

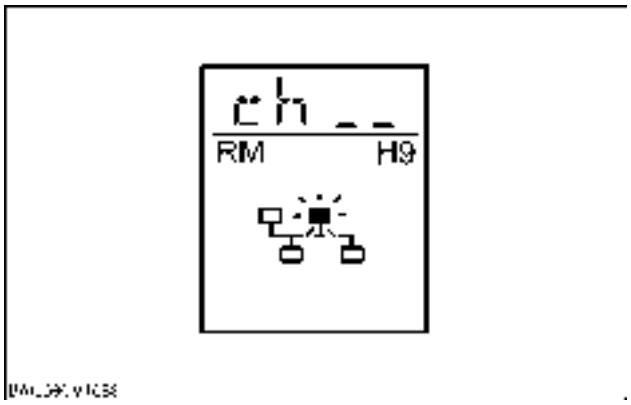

BAIL08CVT088 38

The required channel can be selected by using the navigation "up" and "down" keys.
After a delay the value will be displayed. Compare the value displayed with the typical reading shown in the table below.

NOTE: *The value is the input voltage or signal into the controller. This cannot be directly translated into a voltage due to the internal processes of the controller. A zero equates to* ***0 volts****.*

If the value displayed varies by more than **10 %** to that shown in the table below, a fault is indicated in either the component or the wiring harness relevant to that channel.

NOTE: *Check the connectors of the effected circuit, including the controller connectors, prior to replacing any components.*

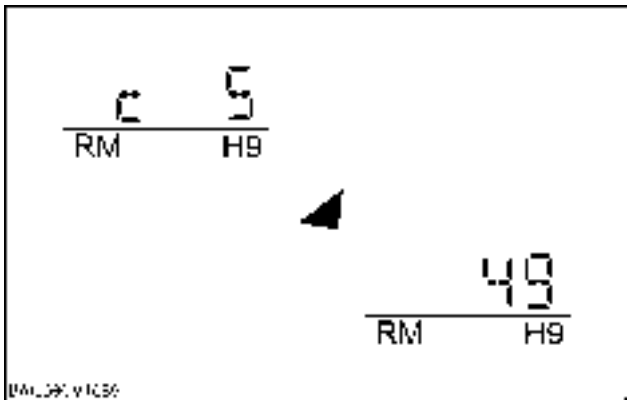

BAIL08CVT089 39

Chan-nel	Description	Connec-tor	Pin	Typical Reading	Comments
5	**+5 Volts** voltage supply to the sensors	CN1B	16	49	
7	**+12 Volt** VF input signal (see explanation)	CN1A	1	45	
8	**+12 Volt** VD input signal (see explanation	CN1A	8	45	The tractor moves, when the engine is running
9	**+12 Volt** VH input signal (see explanation)	CN1A	20	45	
10	**+12 Volt** VT input signal (see explanation)	CN3B	24	45	
14	Amperage of the front PTO solenoid valve	CN2	7	0 when FPTO is Off 99 when FPTO is On	
15	Amperage of the upper lock solenoid suspended front axle	CN2	6	0 when locked out 30 to 55 when active	

https://tractormanualz.com/

Chan-nel	Description	Connec-tor	Pin	Typical Reading	Comments
16	Amperage of the lower lock solenoid suspended front axle	CN2	13	0 when locked out 30 to 46when active	
17	Accelerometer suspended front axle	CN1B	5	40 when vehicle stationary	
26	Front axle position	CN1B	6	120 lower limit 950 upper limit	
28	Front powerlift position	CN1B	2	10 lower limit 90 upper limit	
97	EHR 1 Joystick (X) green	via CAN		100 < 0 > 100	
98	EHR 2 Joystick (Y) blue	via CAN		100 < 0 > 100	

Explanations:
VF Input: This is the input voltage into the controller to suspended front axle components, i.e. Front axle lower and lockout solenoids.
VD Input: This is the input voltage into the controller to suspended front axle raise solenoid.
VH Input: This is the input voltage into the controller to front PTO and front hitch components, i.e. Front PTO solenoid and front hitch height solenoid.
VT Input: This is a second input voltage into the controller.

https://tractormanualz.com/

HA - DEMONSTRATION MENU

Used to demonstrate front axle suspension.

HA Menu Screen Select Diagram

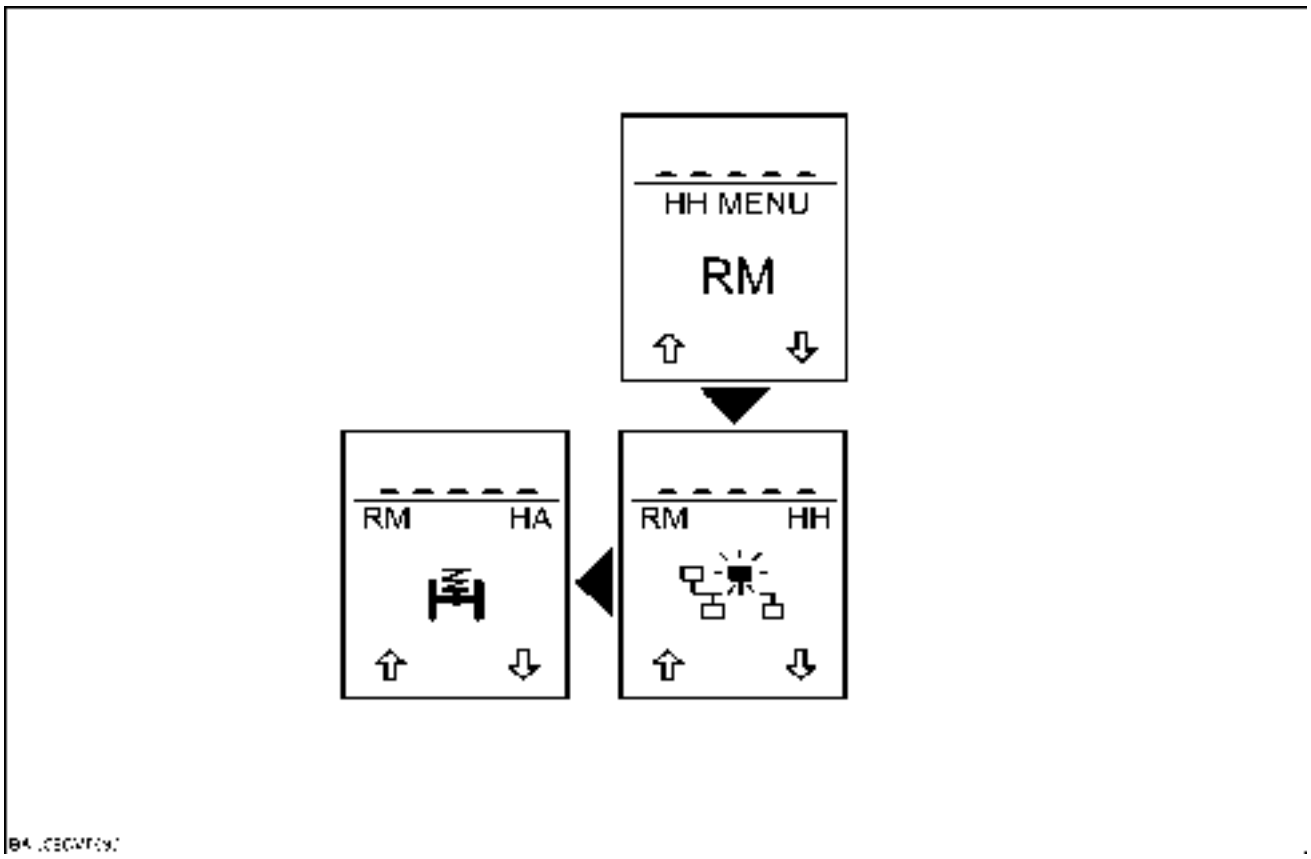

BAIL08CVT090 40

Select the HA menu by depressing the "menu" key.

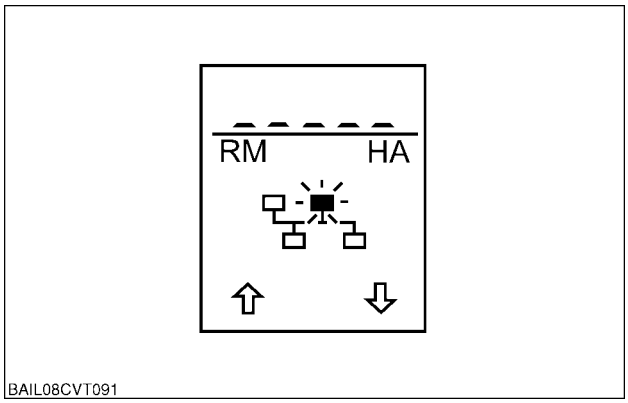

BAIL08CVT091 41

https://tractormanualz.com/

The upper section of the display will display "ch - -"

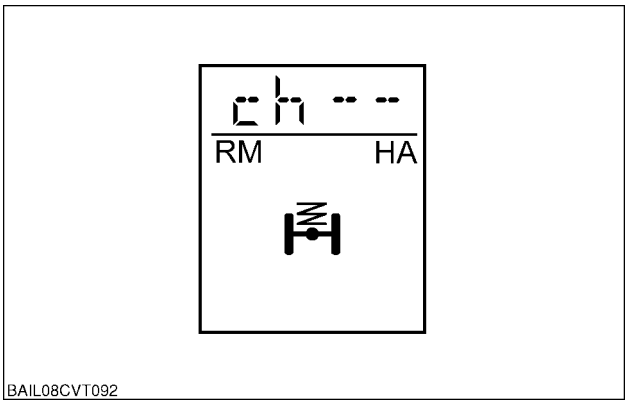

BAIL08CVT092 42

The required channel can be selected by using the navigation "up" and "down" keys.
After a delay the current setting will be displayed. (see the table below for the description of the channel).

Channel	Description
Ch 1	Front Axle Suspension demonstration

Channel 1 - Front Axle Suspension Demonstration

This demonstration mode allows the suspension to be locked at speeds above the normal **12 Km/h** automatic engagement parameter.
The lower central display will display "FSd" (Front Axle Suspension demonstration).
Start the engine and operate the vehicle to demonstrate front axle suspension.
Use the lockout switch to lock the suspension as normal. The light in the switch will be illuminated to indicate the front axle suspension had been locked.

NOTE: *Front axle suspension demonstration will be disabled after turning the keystart OFF.*

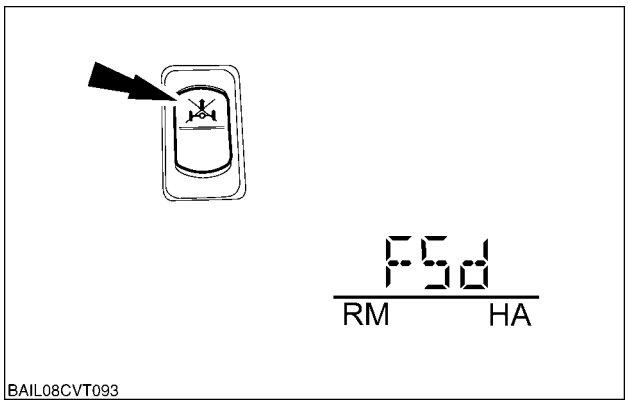

BAIL08CVT093 43

https://tractormanualz.com/

HB - DISPLAY STORED FAULT CODES

This menu is used to display fault codes which are stored in the EEPROM of the controller. Common to all sub-systems.

HB Menu Screen Select Diagram

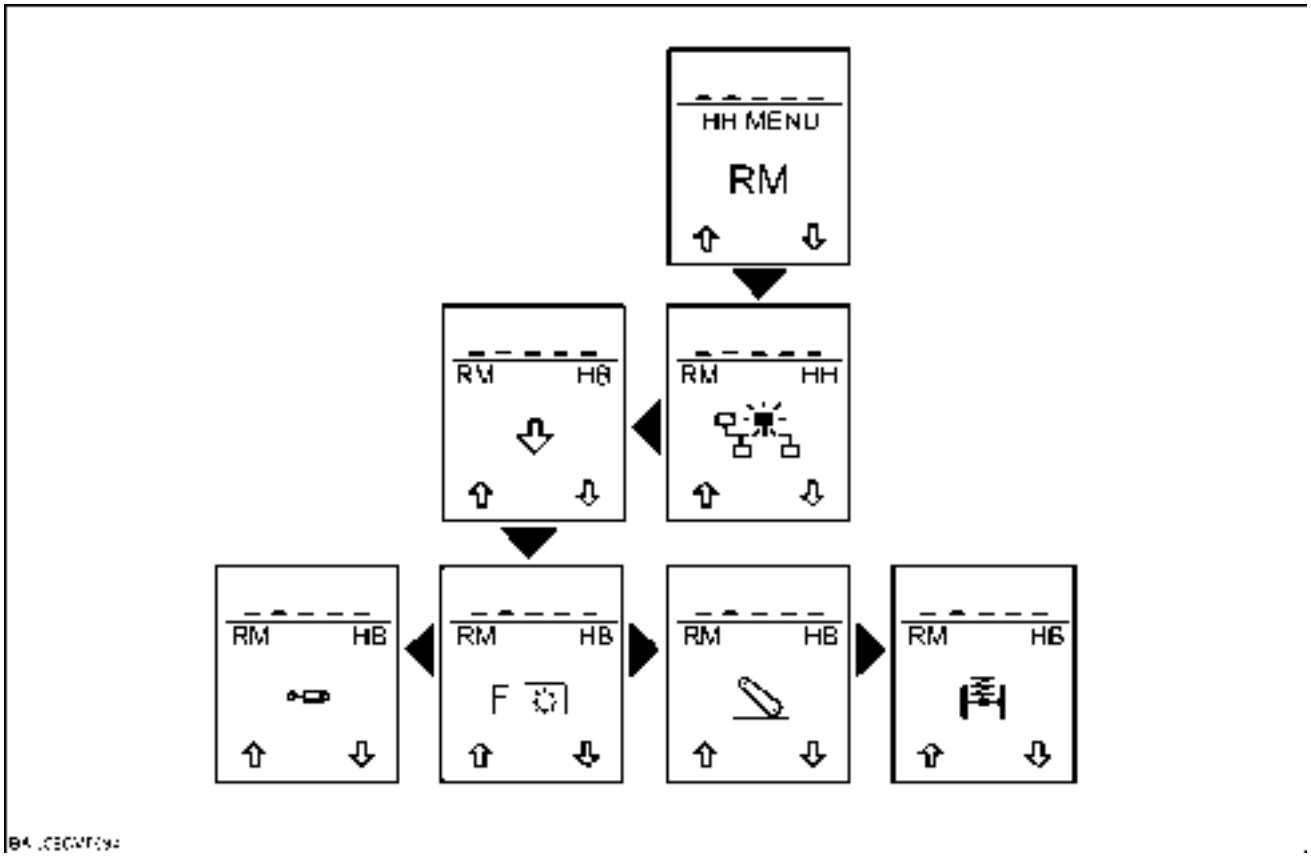

BAIL08CVT094 44

Select the HB menu by depressing the "menu" key.

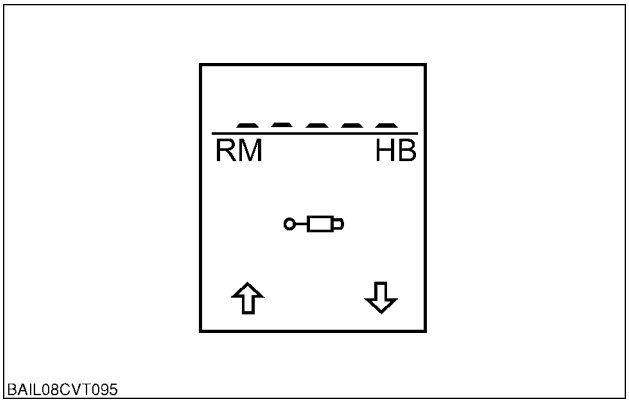

BAIL08CVT095 45

https://tractormanualz.com/

The upper section of the display will display "- - - -", if no fault is stored in the selected sub-system.

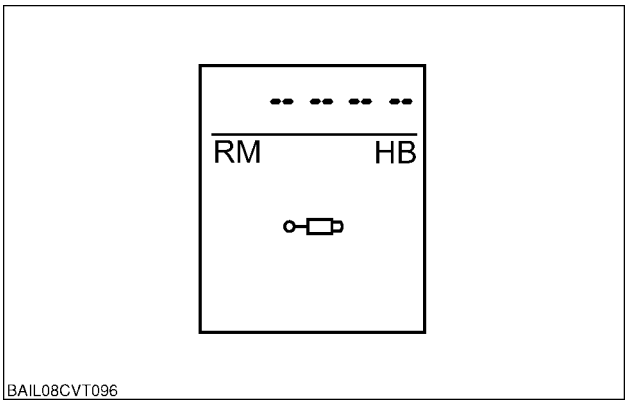

BAIL08CVT096 46

The upper section of the display will display "F", if a fault code is stored in the selected sub-system.
The upper section of the display will then automatically cycle through as the example:

4124Fault code
00 Hour of first occurrence
49 Hour of last occurrence
54 Number of occurrences of the fault

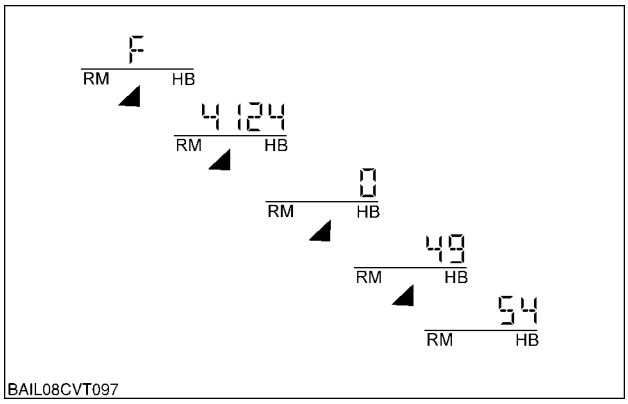

BAIL08CVT097 47

Depress the navigation "up" or "down" key to change to the next fault code in the list.
The upper section of the display will display "_ _ _" at the end of the list.
Depress the "menu" key to continue navigating through the "HH" menus.

https://tractormanualz.com/

HC - CLEAR STORED FAULT CODES

HC Menu Screen Select Diagram

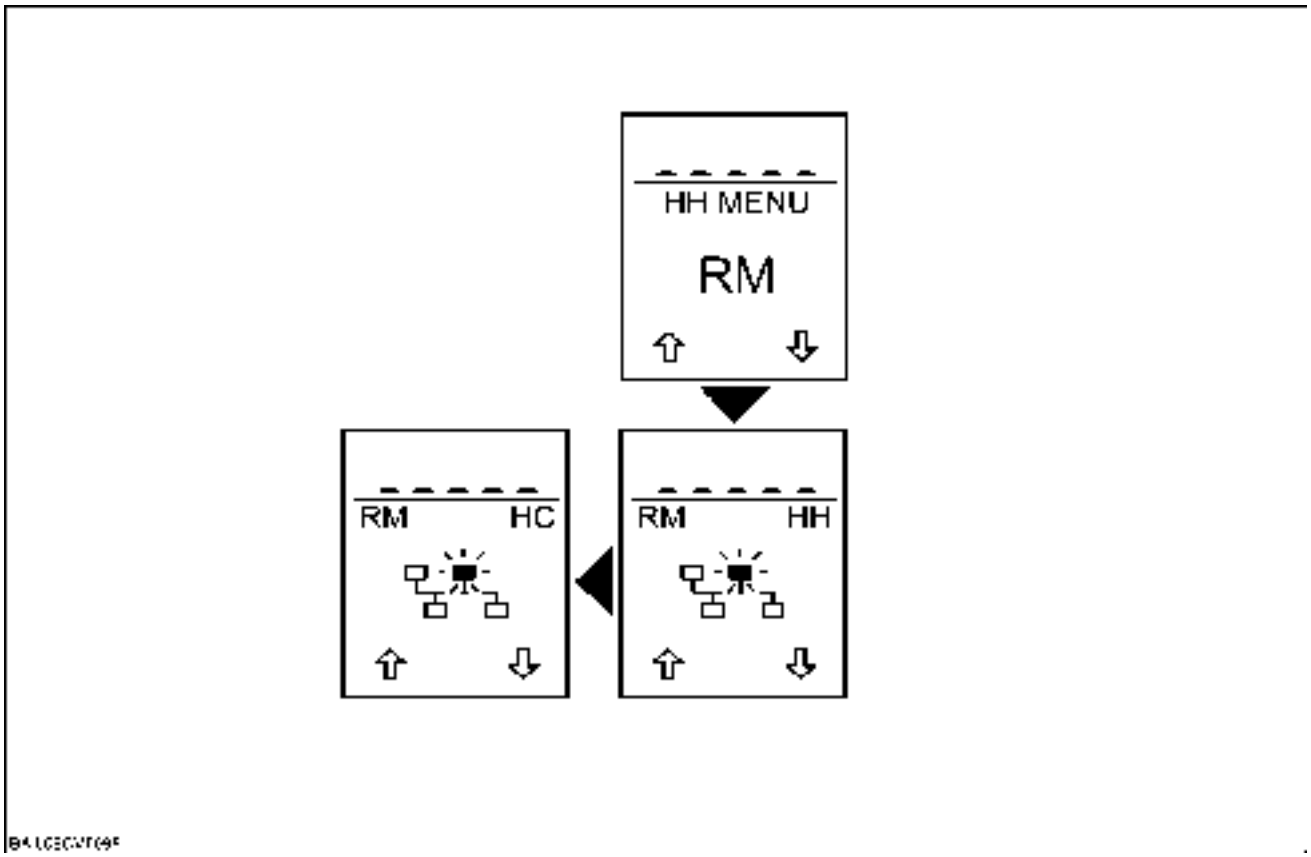

BAIL08CVT098 48

NOTE: *Always make a note of the fault codes stored, before clearing.*

Select the HC menu by depressing the "menu" key.

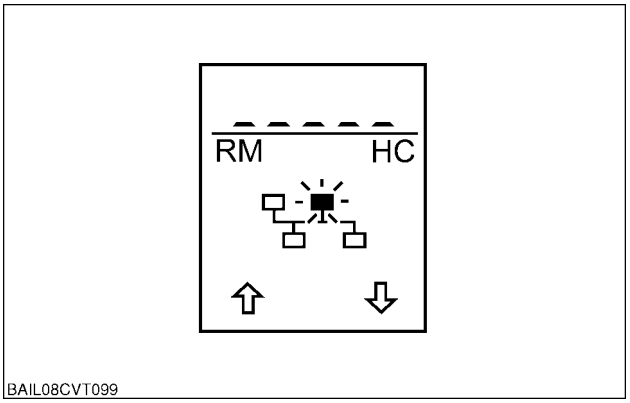

BAIL08CVT099 49

https://tractormanualz.com/

The upper section of the display will display "F CL".

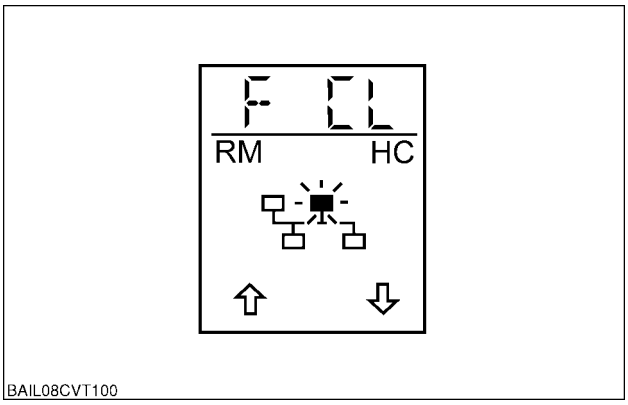

BAIL08CVT100 50

NOTE: *If the navigation "down" key is released before the countdown finishes, the procedure will be aborted.*

Depress and hold the navigation "down" key to confirm the clearing of the memory.

NOTE: *The upper section of the display will countdown from 05 to 01, then "EE" will be displayed to indicate the fault codes have been cleared.*

Depress the "menu" key to continue navigating through the "HH" menus.

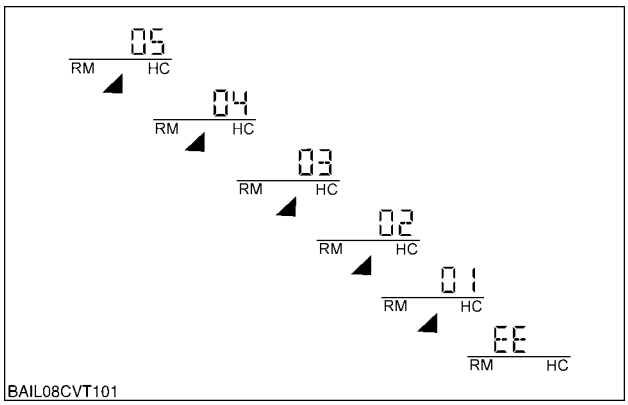

BAIL08CVT101 51

https://tractormanualz.com/

HE - DISPLAY ALL SPEED INPUTS

Common to all sub-systems.

HE Menu Screen Select Diagram

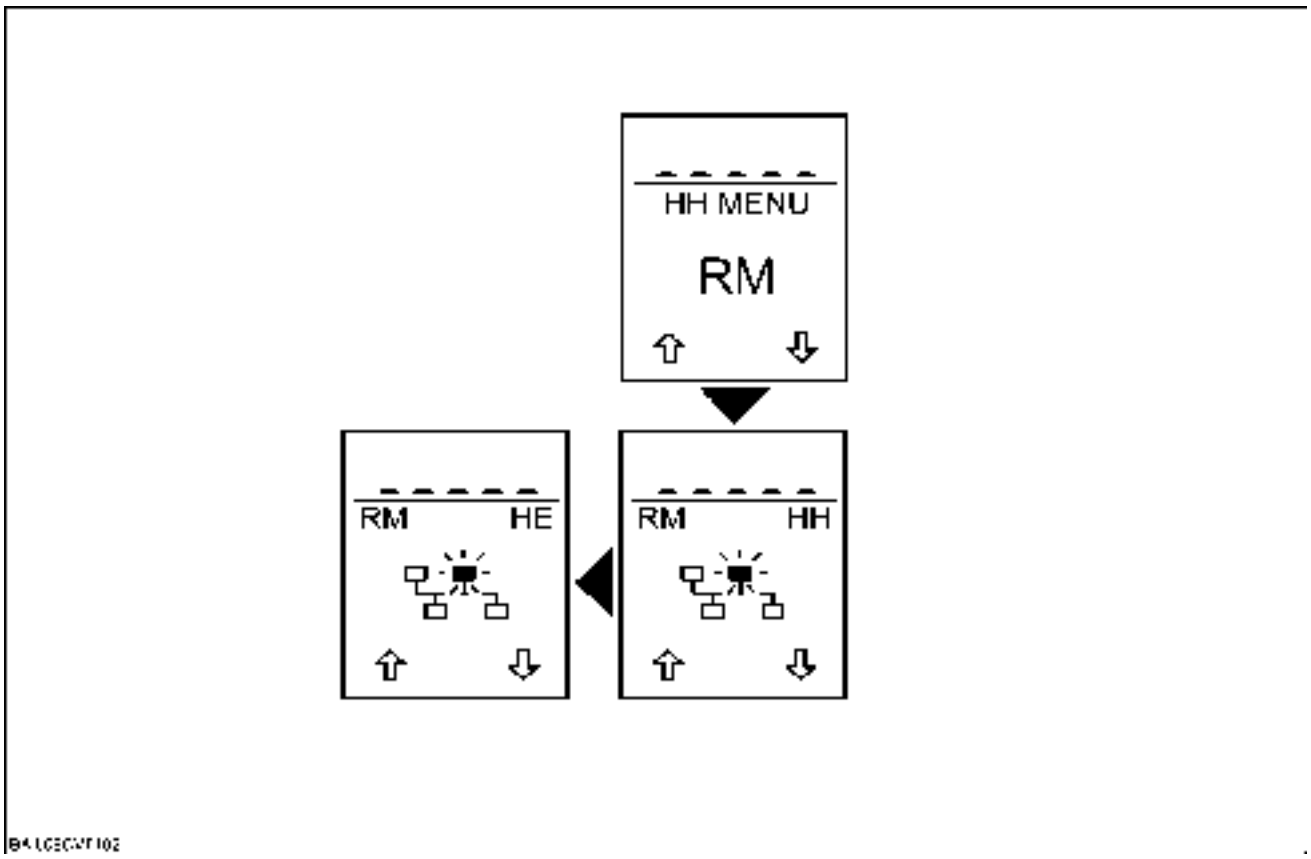

BAIL08CVT102 52

Select the HE menu by depressing the "menu" key.

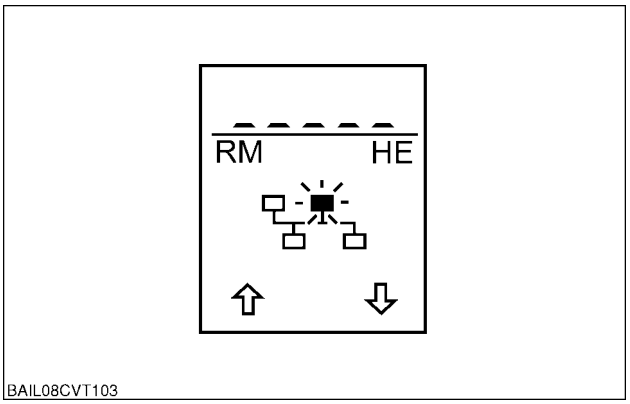

BAIL08CVT103 53

https://tractormanualz.com/

The upper section of the display will display "ch _".

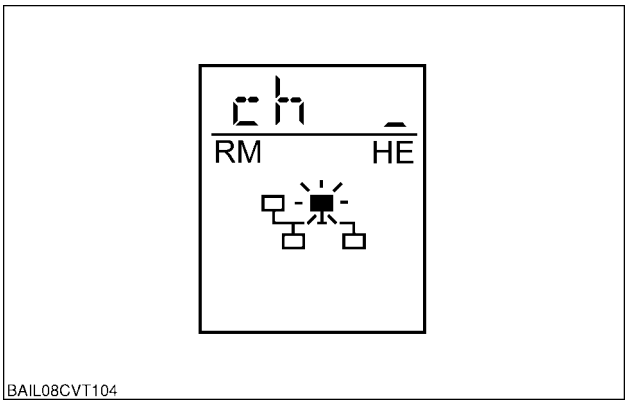

BAIL08CVT104 54

The required channel can be selected by using the navigation "up" and "down" keys.
Refer to the table below for the available channels.
After a delay the value will be displayed.
Depress the "menu" key to continue navigating through the "HH" menus.

Channel	Description	Typical Reading	Notes
0	Not used		
1	Not used		
2	Not used		
3	Not used		
4	Not used		
5	Not used		
6	Not used		
7	Not used		
8	Not used		

https://tractormanualz.com/

HF - VIEW CONTROLLER HARDWARE INFORMATION

This menu allows the hardware identification, hardware version and serial number to be displayed. Common to all sub-systems.

HF Menu Screen Select Diagram

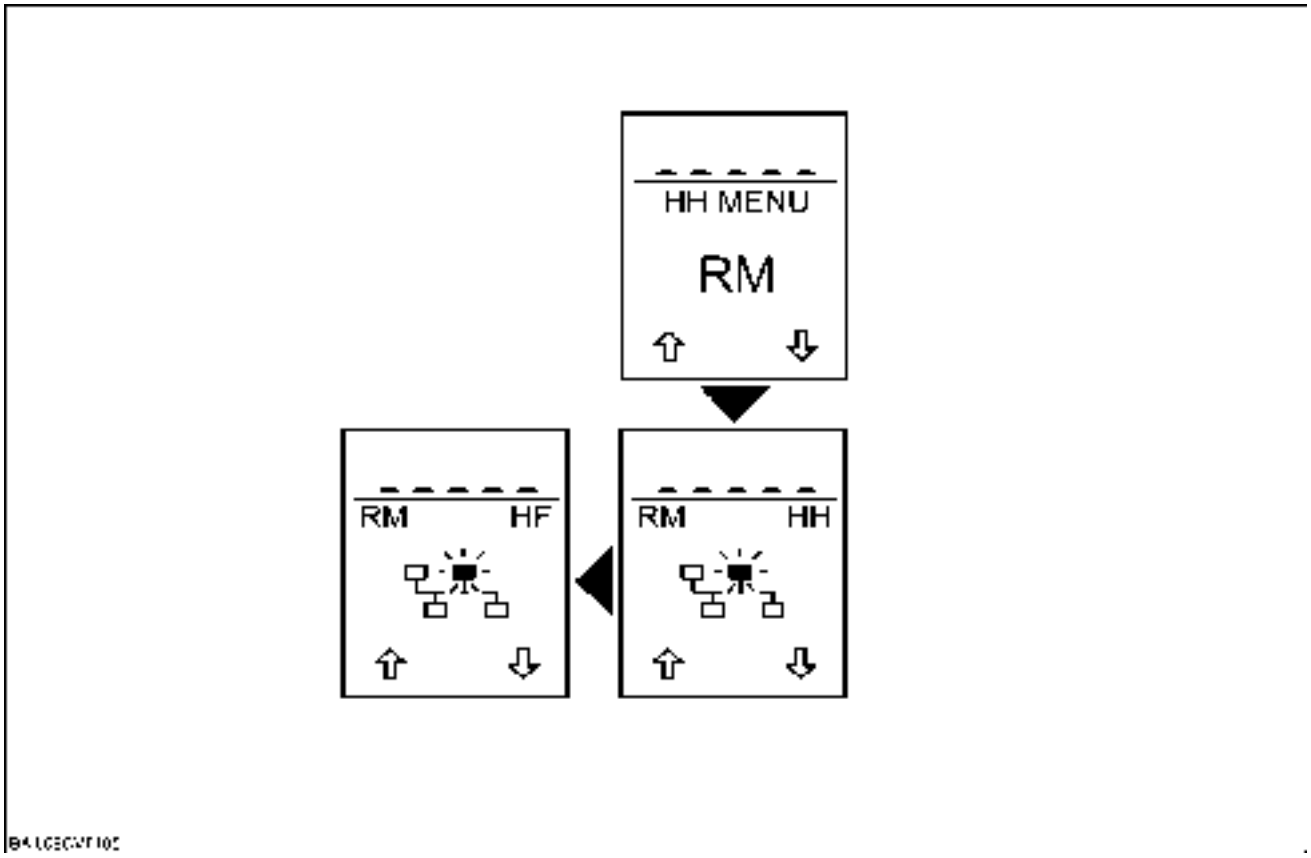

BAIL08CVT105 55

Select the HF menu by depressing the "menu" key.

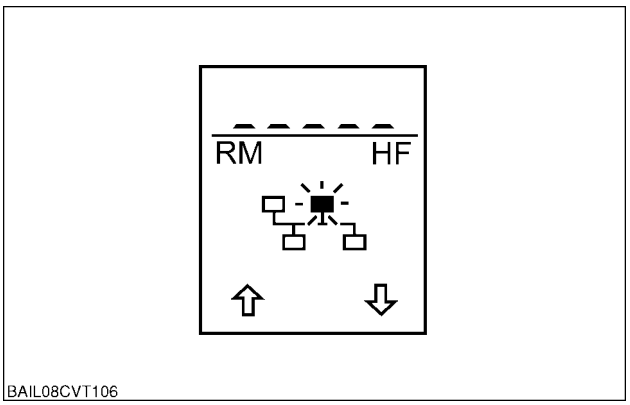

BAIL08CVT106 56

https://tractormanualz.com/

The upper section of the display will automatically cycle through as the example:

559 Hardware identification
0300 Hardware version
0000 Hardware version
0000 Serial number
2000 Serial number
4752 Serial number
and return to allow navigation of the "HH" menus.

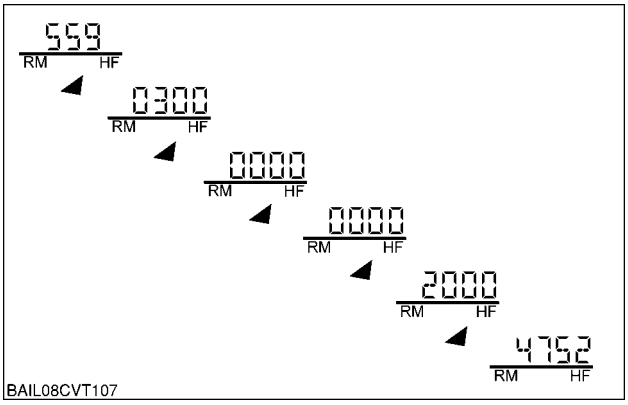

BAIL08CVT107 57

https://tractormanualz.com/

HJ - ELECTRONIC HYDRAULIC REMOTE CONTROL VALVE SET-UP

This menu allows the Electronic Hydraulic Remote (EHR) control valve numbers to be reset.
The EHR valve stores a number to indicate its position in the remote control valve stack, i.e. valve number 1,2, 3, 4 or 5. If a valve assembly has been replaced it will be necessary to reprogram the number of each valve within the complete assembly. New valves are supplied without an assigned number.

NOTE: *The renumbering procedure for all of the valves, either rear or mid mount valves, must be completed before commencing the procedure for the other set of valves.*

HJ Menu Screen Select Diagram

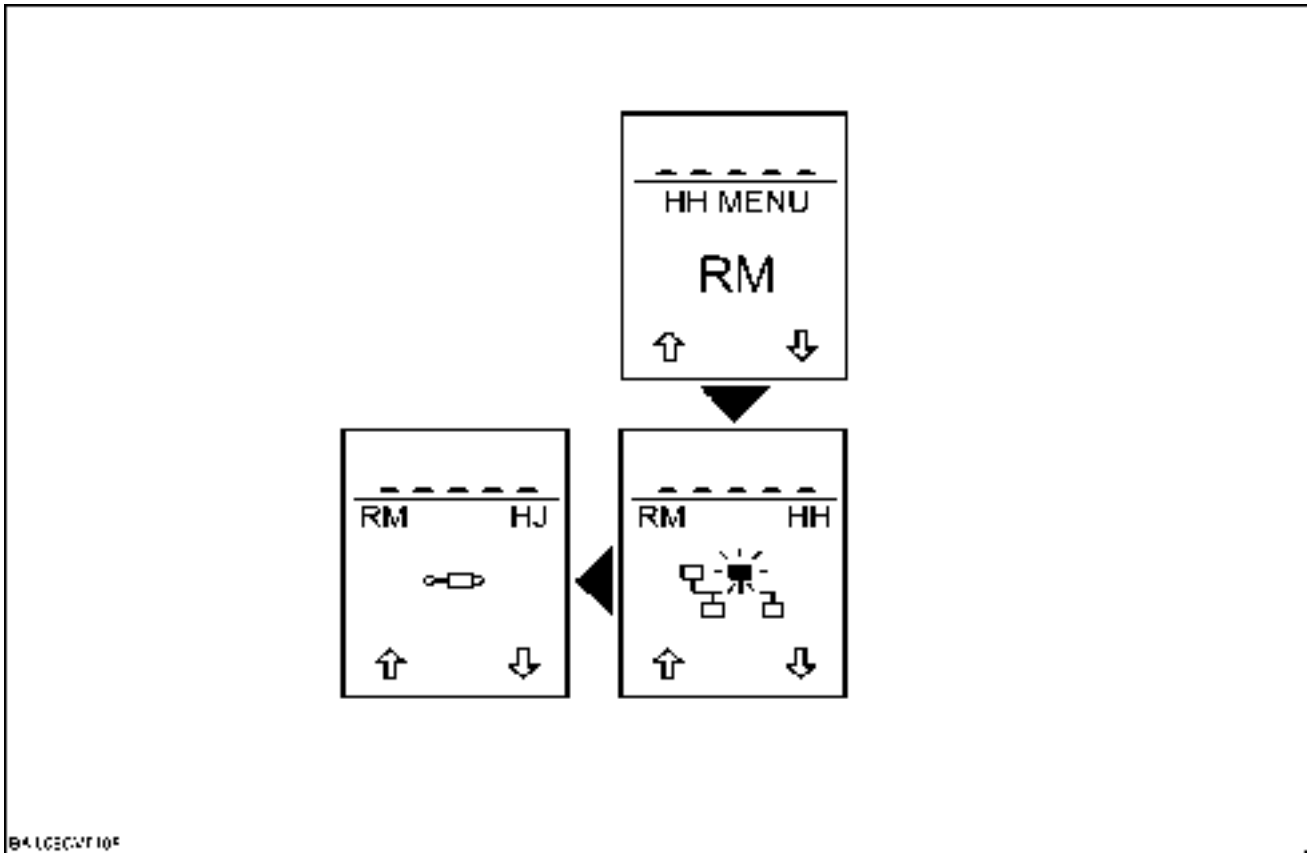

BAIL08CVT108 58

With all of the rear remotes connected, navigate the H-menus and select the HJ menu by depressing the "menu" key.

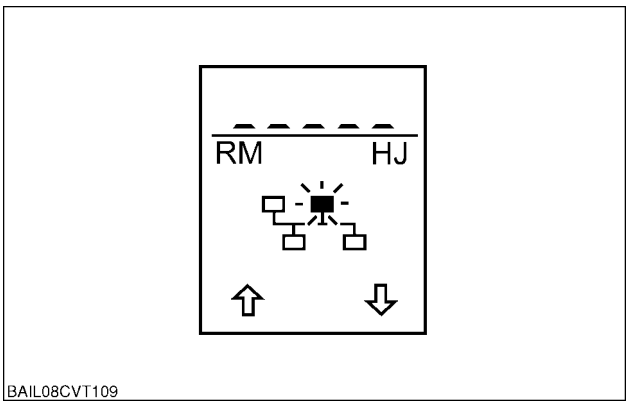

BAIL08CVT109 59

The upper section of the display will display "EEhr".

https://tractormanualz.com/

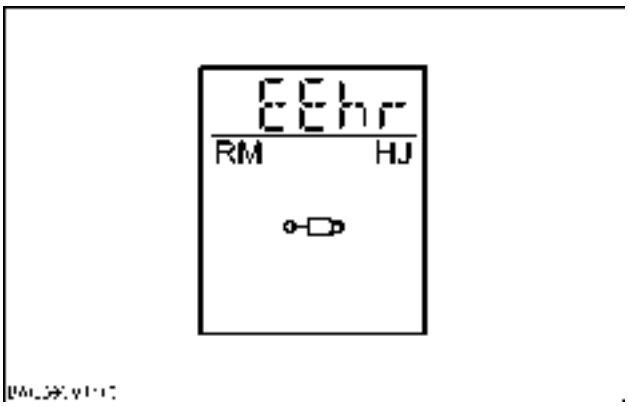

BAIL08CVT110 60

NOTE: *HJ will clear all the EHR valve numbers.*

NOTE: *If the navigation "down" key is released before the countdown finishes, the procedure will be aborted.*

Depress and hold the navigation "down" key to confirm the resetting of the valve numbers.
The upper section of the display will countdown from 05 to 01, then "CEhr" will be displayed to indicate the valve numbers have been reset.

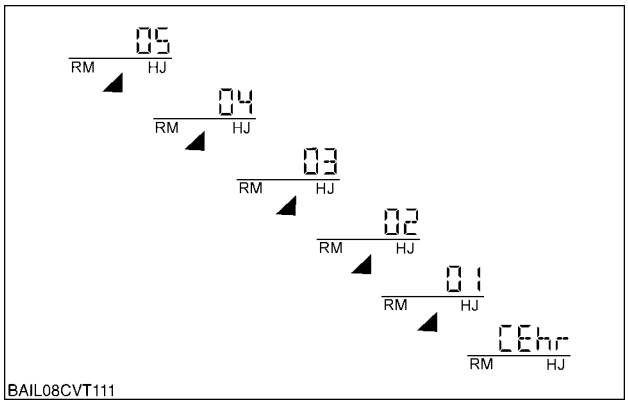

BAIL08CVT111 61

Turn the keystart OFF.

Disconnect the connectors from each of the remote valves, except for valve number 1.

Turn the keystart ON and enter HJ menu again. The cluster display will momentarily flash ’Ehr_’ followed by ’Ehr1’, an audible beep will be heard, indicating that number 1 valve has been recognised and renumbered. The display will then change to flash ’Ehr2’ to signify that the controller is ready for the next valve to be connected..

Connect each remote valve in the correct order. As each valve is connected an audible beep will signify the valve is recognised.

As each valve is connected the display will change to show the next valve number to be connected until ’Ehr_5’ is displayed.

If there are less than 5 rear remotes then the procedure can be exited by depressing and holding the navigation ’down’ key , the display will change to ’End’ to indicate programming is complete. If the maximum number of valves are fitted then the procedure will end automatically and display ’End’.

Turn the keystart OFF to store the new valve numbers.

Calibrate the remote valves. Refer to **PRIMARY HYDRAULIC POWER SYSTEM Electro-hydraulic remote valve - Calibrate (A.10.C)**.

https://tractormanualz.com/

HK - Rear Electro Hydraulic Remote Valve Diagnostic Functions

This menu is used to provide a number of diagnostic functions for the Rear EHR valves.

NOTE: *If this procedure is to be carried out following the change of a pilot head, then the HJ procedure should first be carried out in order to renumber the valves.*

HK Menu Screen Select Diagram

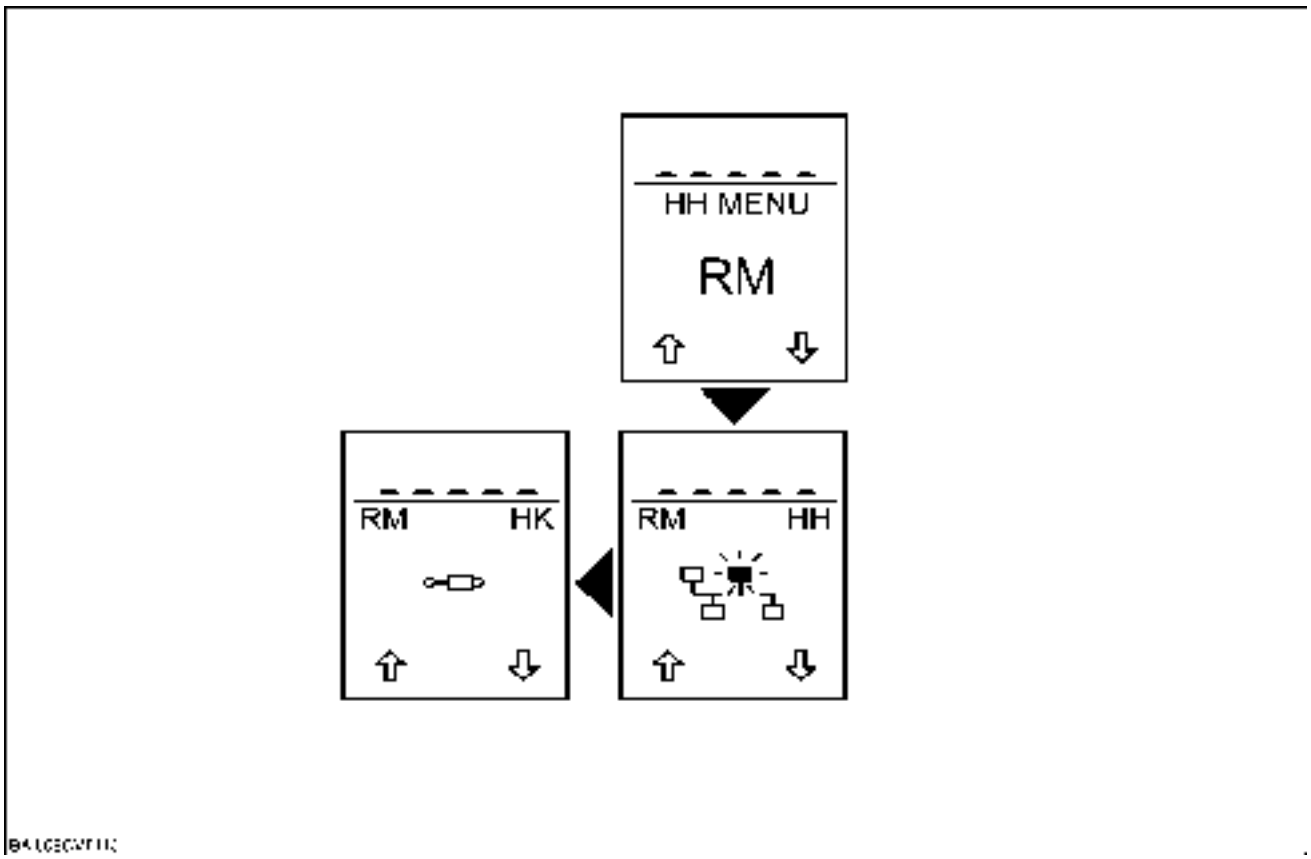

BAIL08CVT112 62

Select the HK menu by depressing the "menu" key. Depressing the Menu Key again will display "ch--". Use the "up" or "down" key to navigate to the required channel.

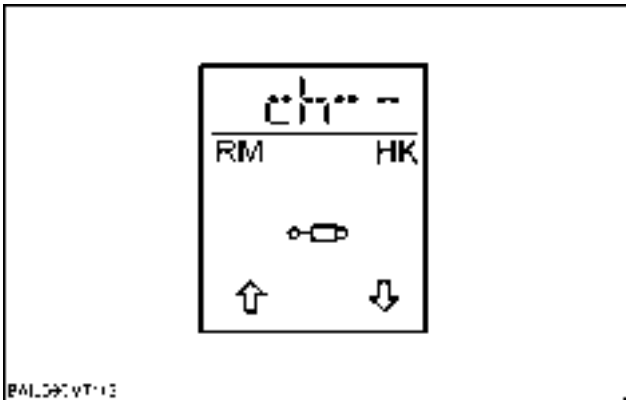

BAIL08CVT113 63

Channel	Description	Comments
Ch 1	Valve Calibration	Required when installing a new valve pilot head. Requires the use of special tools **380001903** pressure transducer and **84148258** jumper harness.

https://tractormanualz.com/

Channel	Description	Comments
Ch 2	Read Calibration Data	For information only. Reads the valve calibration data

Channel 1 - Valve Calibration

This channel is used to perform the on-board calibration of the rear EHR valves

1. Connect the pressure transducer, special tool **380001903**, with jumper harness, special tool **84148258**. Connect the pressure transducer to the quick release coupler located on the top of the valve block **(1)**, and using the jumper harness, connected to the transducer harness, connect to the "front hitch and PTO" connector, **X227**, located on the left side of the vehicle under the hood on top of the engine.

BAIL08CVT330 64

2. Select the EHR to be calibrated by using the "up" and "down" keys.

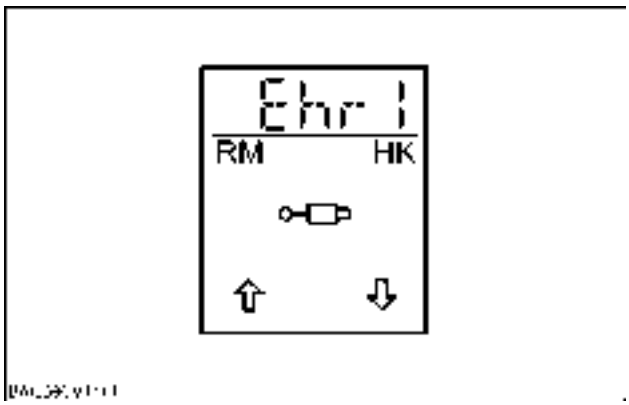

BAIL08CVT114 65

3. Start the engine. Depress and hold the "down" key for 2 seconds, calibration will start automatically. During calibration the valve position data will be displayed. The display will show "End" if the procedure was successful.

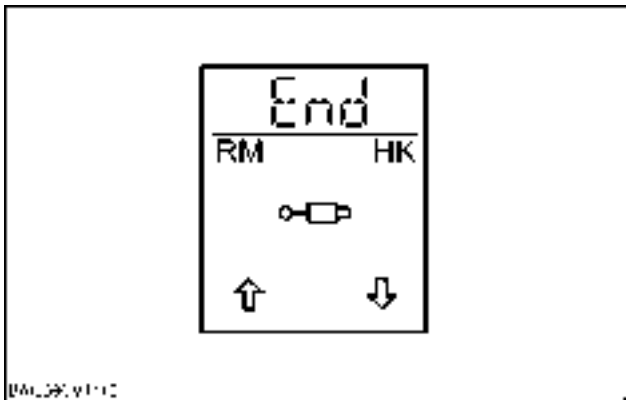

BAIL08CVT115 66

4. To calibrate another valve use the "up" and "down" key to select the required valve and repeat step 3.

https://tractormanualz.com/

Channel 2 - Read Calibration Data

This channel is for information purposes only to read the calibration data of each valve

1. Select the EHR valve number which is to be read by depressing the "up" and "down" keys.

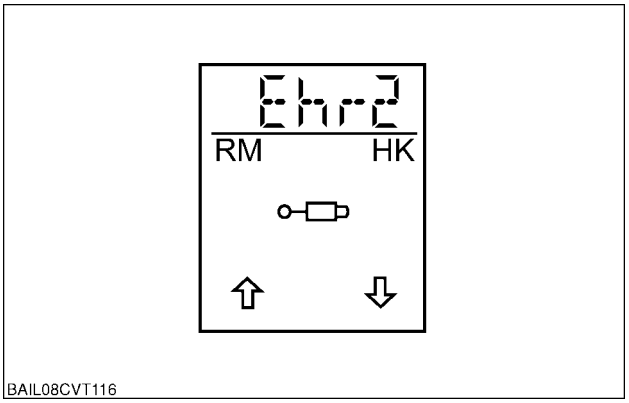

BAIL08CVT116 67

2. Depress and hold the "down" key for 2 seconds. The display will show the calibration data for each position prefixed by ’n’ (neutral), ’R’ (raise), ’L’ (lower), ’F’ (float).

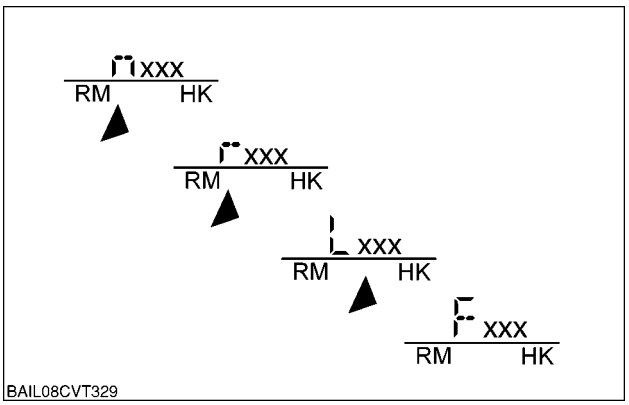

BAIL08CVT329 68

3. To read the calibration values from another valve use the "up" and "down" keys to select the required valve number and repeat step 2.

Control module - Configure - CVT Transmission, Electronic Draft Control, Rear PTO, Front Wheel Drive, Differential Lock, Front Electronic Hydraulic Remote Valves, Engine.

Control Module RE

HH	Service Menu	Figure Number
H1	Calibration procedures	**1**
H2	View stored calibration values	**2**
H3	Configurations	**8**
H4	View software revision level	**35**
H5	Switch operation test	**38**
H6	Vehicle information view	**42**
H7	Vehicle test modes	**45**
H8	Clear Electrically Erasable Programmable Read Only Memory (EEPROM)	**58**
H9	Voltmeter	**64**
HA	Demonstration mode	
HB	Display stored fault codes	**67**
HC	Clear all stored fault codes	**71**

https://tractormanualz.com/

HH	Service Menu	Figure Number
HE	Display frequency inputs	**75**
HF	View controller hardware information	**79**
HJ	Electronic hydraulic remote control valve set-up	**82**

https://tractormanualz.com/

H1 - CALIBRATION PROCEDURES

This menu is used to calibrate:

1. Electronic Draft Control Valve. Refer to **HITCH Electronic draft control - Calibrate (H.10.D)**.
2. Transmission Clutches, determining the current required to turn the input / output shaft at the required speed. Flywheel speed sensor and PTO torque sensor, Refer to **TRANSMISSION Continuously Variable Transmission (CVT) - Calibrate (C.20.G)**.
3. Engine (for PTO torque sensor). Refer to **REAR PTO Hydraulic - Calibrate (C.40.C)**.
4. Differential lock (for steering angle sensor). Refer to **FRONT AXLE - Calibrate (D.10.A)**.

H1 Menu Screen Select Diagram

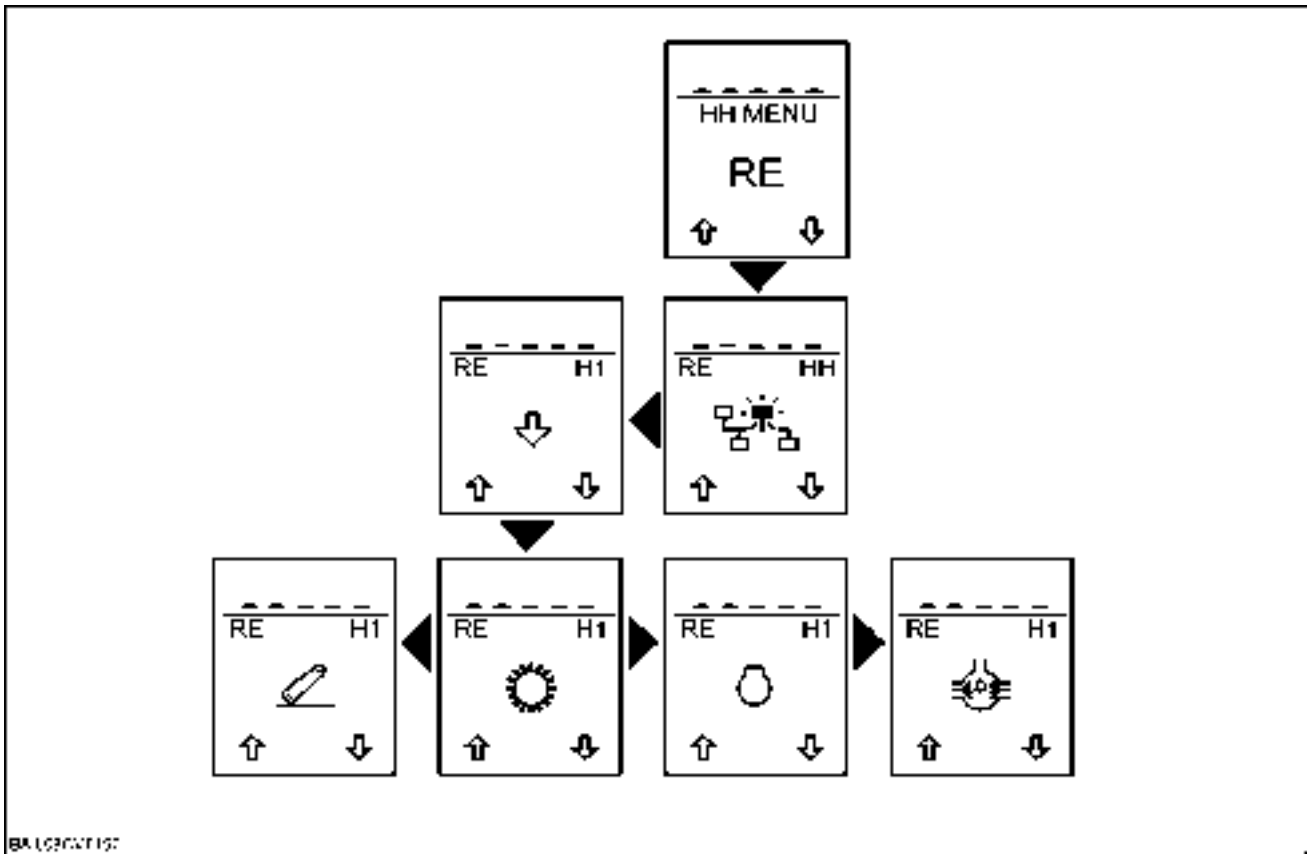

BAIL08CVT150 1

https://tractormanualz.com/

H2 - VIEW STORED CALIBRATION VALUES

This menu is used to display the calibration values stored in the controllers for:

1. Transmission clutches and synchronisers
2. Differential lock (for steering angle sensor)
3. Electronic draft control valve
4. Rear PTO clutch

H2 Menu Screen Select Diagram

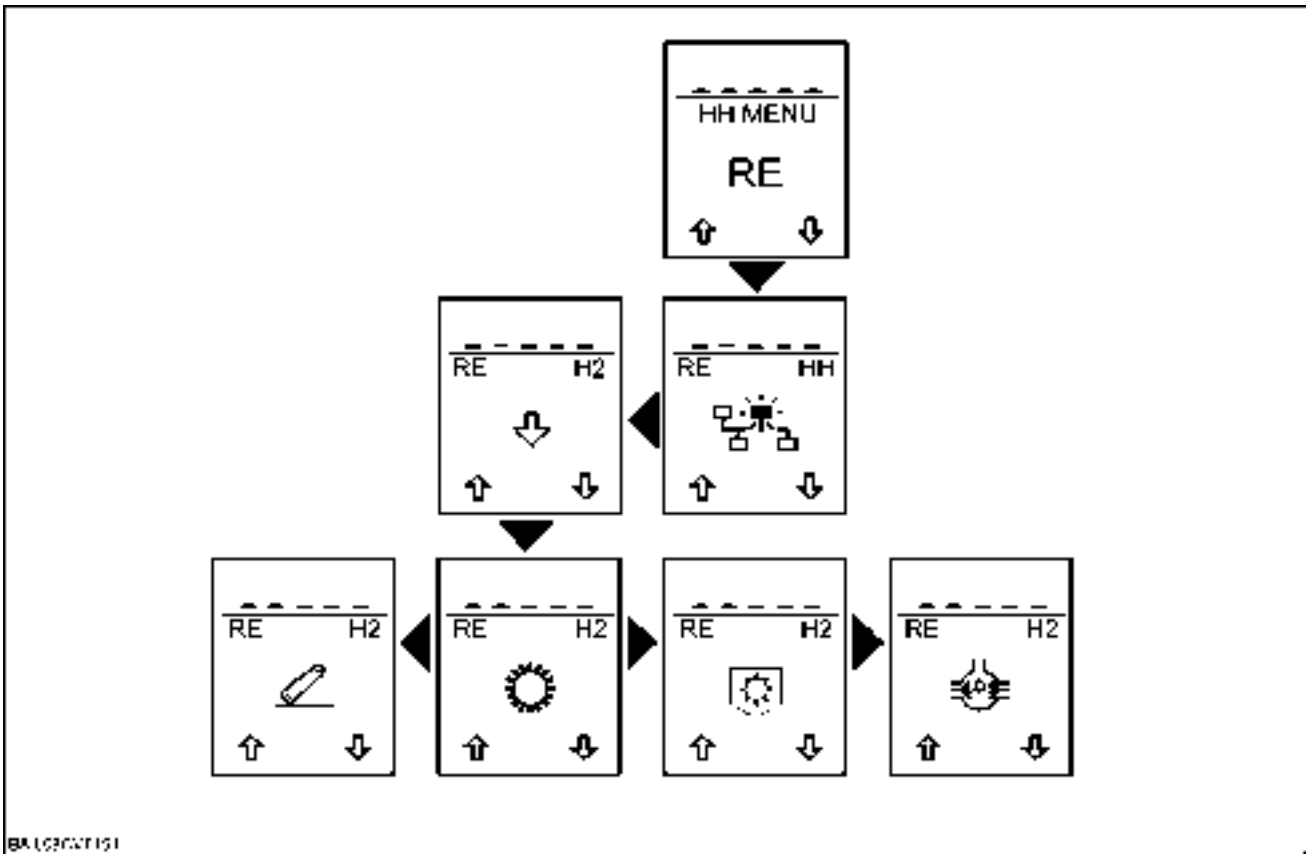

BAIL08CVT151 2

https://tractormanualz.com/

TRANSMISSION VALUES

Select the transmission sub-system by depressing the “menu" key.
The upper section of the display will display “ch _ _".
The required channel can be selected by using the navigation “up" and “down" keys.

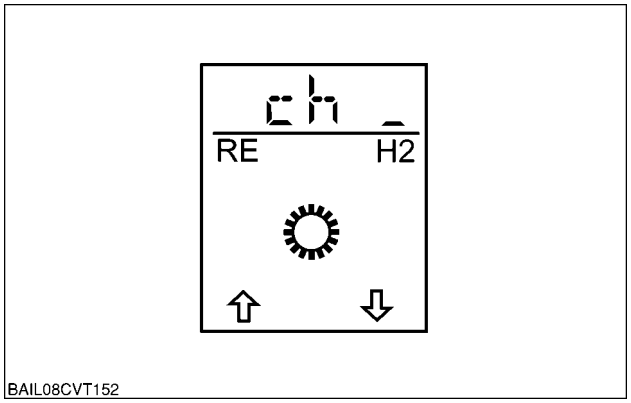

BAIL08CVT152 3

After a delay the channel number followed by the clutch letter and calibration value will be displayed (refer to the table below for a description of each channel).
The solenoid current values are displayed in units of milliamps and the synchro position value is displayed proportional to a voltage where the value 1025 = 5V.
Depress the “menu" key to continue navigating through the “HH" menus.

Channel	Description	Code	Approx Value
Ch 1	Clutch A calibration current	cl A	200mA-400mA
Ch 2	Clutch B calibration current	cl B	200mA-400mA
Ch 3	F1 synchro position potentiometer calibration value	F1 P	61 to 249
Ch 4	F2 synchro position potentiometer calibration value	F2 P	61 to 249
Ch 5	F3 synchro position potentiometer calibration value	F3 P	731 to 963
Ch 6	F4 synchro position potentiometer calibration value (4x2 transmission only)	F4 P	731 to 963
Ch 7	R1 synchro position potentiometer calibration value	r1 P	731 to 963
Ch 8	R2 synchro position potentiometer calibration value (4x2 transmission only)	r2 P	61 to 249
Ch 9	F1/F3 neutral position calibration value	n1 P	420 to 580
Ch 10	F2/R1 neutral position calibration value	n2 P	420 to 580
Ch 11	F4/R2 neutral position calibration value (4x2 transmission only)	n3 P	420 to 580
Ch 12	Damper torque calibration value	dt	11 to 244
Ch 13	PTO twist calibration value	Pt	4400 to 13600

https://tractormanualz.com/

DIFFERENTIAL LOCK (FOR STEERING ANGLE SENSOR) VALUES

NOTE: *The default calibration value is 12287 for the steering angle sensor.*

Select the differential lock sub-system by depressing the “menu" key.
The lower central display will display “ch 1".

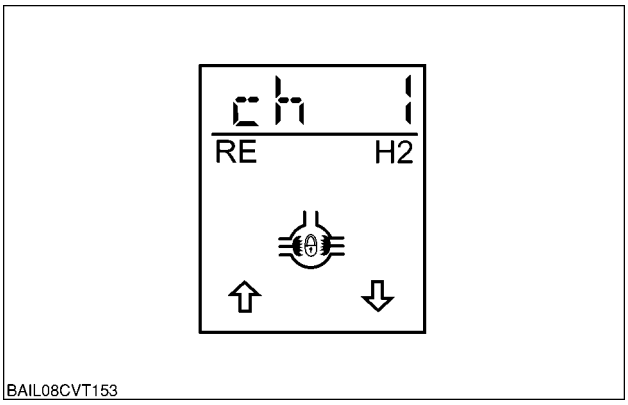

BAIL08CVT153 4

After a delay the calibration value will be displayed. (see the table below for the description of the channel).
Depress the “menu" key to continue navigating through the “HH" menus.

Channel	Description	Value Range
Ch 1	Steering angle sensor	7000 - 10000

https://tractormanualz.com/

ELECTRONIC DRAFT CONTROL VALVE VALUES

NOTE: *The default calibration value is 50 for both the raise and lower solenoids.*

Select the Electronic Draft Control sub-system by depressing the “menu" key.
The upper section of the display will display “ch _ _".
The required channel can be selected by using the navigation “up" and “down" keys.

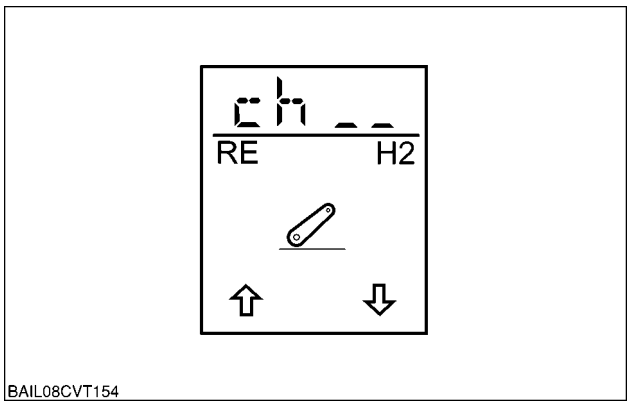

BAIL08CVT154 5

After a delay the code followed by the calibration value will be displayed. (see the table below for the description of each channel).
Depress the “menu" key to continue navigating through the “HH" menus.

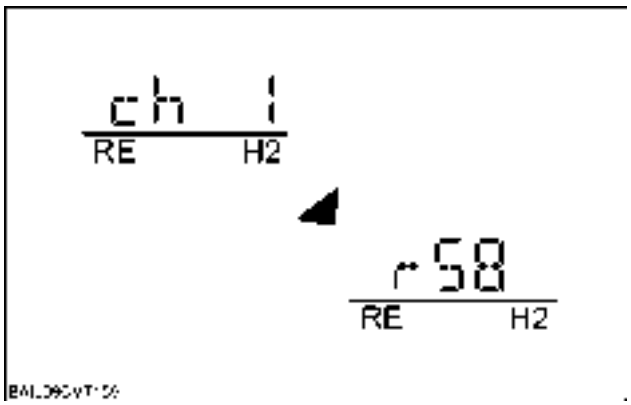

BAIL08CVT155 6

Channel	Description	Code	Value Range
Ch 1	Raise solenoid	R	20 - 80
Ch 2	Lower solenoid	L	20 - 80

https://tractormanualz.com/

PTO VALUES

NOTE: *The default calibration value is 212 for the PTO solenoid.*

Select the PTO sub-system by depressing the “menu" key.
The upper section of the display will display “ch _ _".
The required channel can be selected by using the navigation “up" and “down" keys.

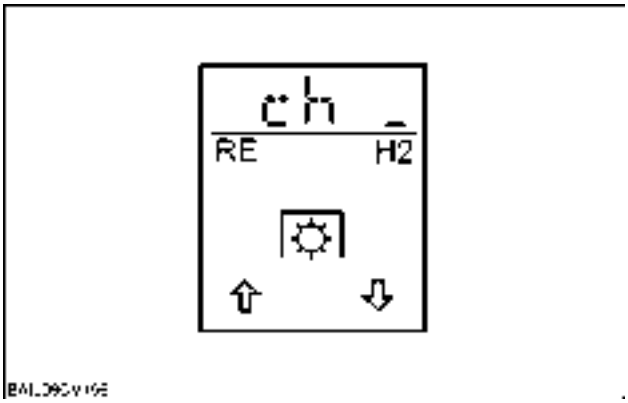

BAIL08CVT156 7

After a delay the calibration value will be displayed. (see the table below for the description of each channel).
Depress the “menu" key to continue navigating through the “HH" menus.

Channel	Description	Value Range
Ch 1	PTO oil temperature	Temperature dependant
Ch 2	PTO solenoid	100 to 420
Ch 3	Shiftable PTO extend value	700 to 900
Ch 4	Shiftable PTO retract position	100 to 300
Ch 5	Shiftable PTO neutral position	450 to 600
Ch 6	Shiftable PTO optional speed setting	1000, 540E, 540, 1000E

https://tractormanualz.com/

H3 - CONFIGURATIONS

This menu is used to display the configurations available for:

1. Electronic Draft Control
   - Ch.1 Diameter of the external hydraulic lift rams
   - Ch.2 Enable / Disable Electronic Draft Control
   - Ch.3 Enable / Disable Slip Control
2. Transmission
   - Ch.1 Not used
   - Ch.2 Not used
   - Ch.3 **40 Km/h** maximum speed restriction (Yes = Restricted)
   - Ch.4 Not used
   - Ch.5 Clutch A quickfill value adjustment
   - Ch.6 Clutch B quickfill value adjustment
3. Electronic engine
   - Ch.1 PTO dynamometer power boost test
   - Ch.2 Not used
   - Ch.3 Grid heater selection (Yes = fitted)
   - Ch.4 Fuel filter heater selection (Yes = fitted)
   - Ch.5 Engine brake selection (Yes = fitted)
   - Ch.6 Engine fan selection (V = viscous type, r = reversible type)
4. Front EHR
   - Ch.1 Front EHR option selection (Yes = Enabled)
   - Ch.2 Front Loader / Front Hitch selection
   - Ch.3 not used
   - Ch.4 Number of EHR setup
   - Ch.5 High flow pump selection (Yes = Enabled)
5. Rear PTO
   - Ch.1 Not used
   - Ch.2 PTO fender switches selection
   - Ch.3 PTO drop out speed option
   - Ch.4 Electronic shiftable PTO option
6. Differential Lock and Four Wheel Drive
   - Ch.1 Axle type
   - Ch.2 Not used
   - Ch.3 Front axle angles (Terralock)
   - Ch.4 Four wheel drive brake engagement speed selection

https://tractormanualz.com/

H3 Menu Screen Select Diagram

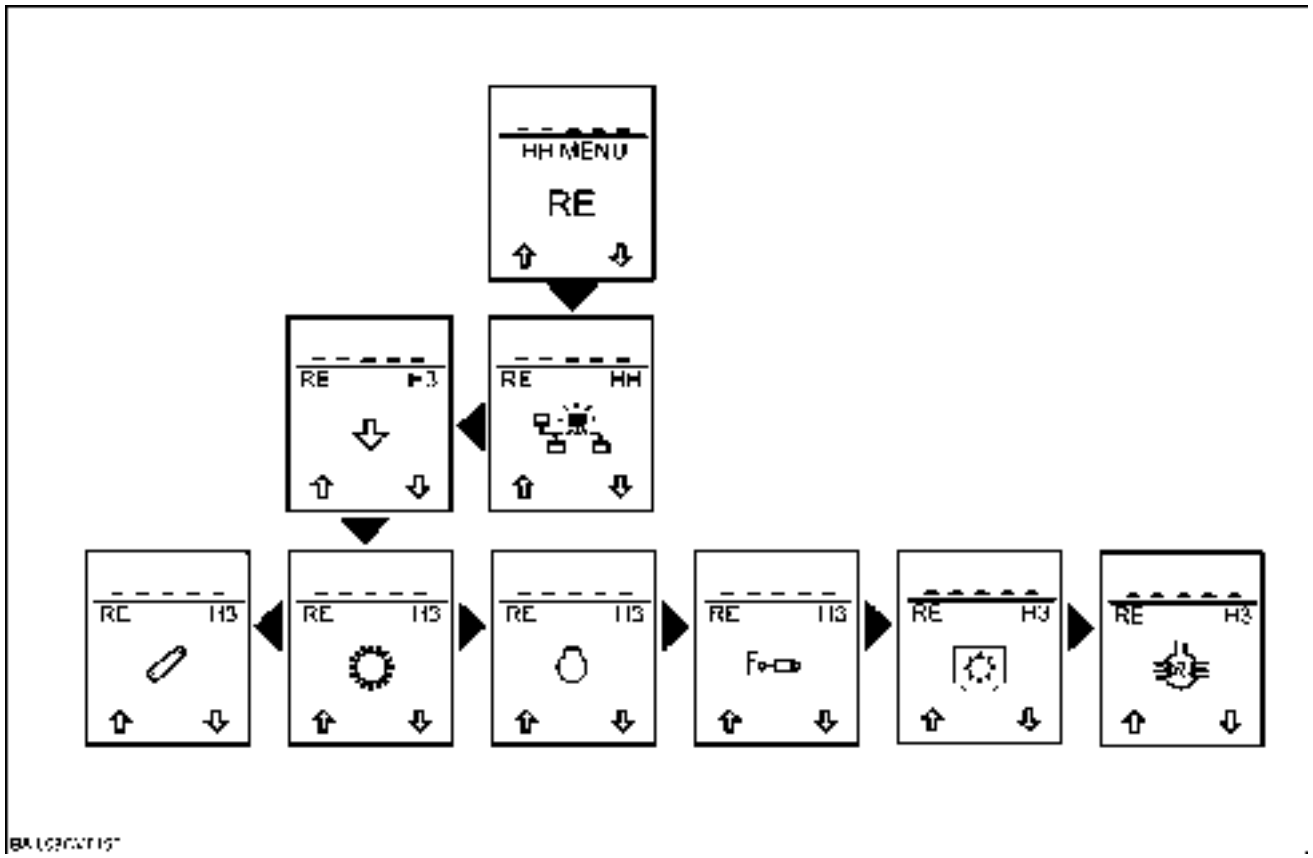

BAIL08CVT157 8

https://tractormanualz.com/

TRANSMISSION OPTIONS

Select the transmission sub-system by depressing the “menu" key.
The upper section of the display will display “ch _ _".

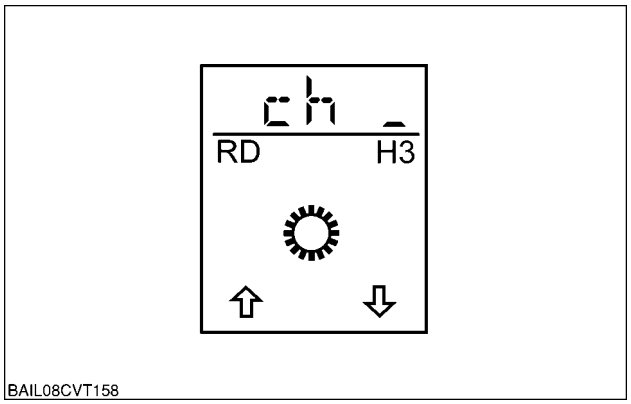

BAIL08CVT158 9

The required channel can be selected by using the navigation “up" and “down" keys (see the table below for the description of each channel).

Channel	Description
Ch 1	Not used
Ch 2	Not used
Ch 3	**40 Km/h** maximum speed restriction
Ch 4	Not used
Ch 5	Clutch A quickfill value adjustment
Ch 6	Clutch B quickfill value adjustment
Ch 7	Not used
Ch 8	Not used

https://tractormanualz.com/

Channel 1 - Not used

This channel is not used and "---" will be displayed.

Channel 2 - Not used

This channel is not used and "---" will be displayed.

https://tractormanualz.com/

Channel 3 - 40 Km/h maximum speed restriction

This channel is used to select whether the **40 Km/h** maximum speed restriction option is enabled or disabled.
After a delay the current stored value will be displayed.

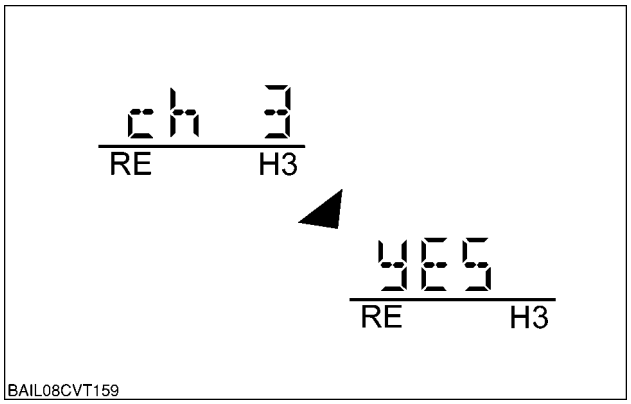

BAIL08CVT159 10

Use the navigation "up" and "down" keys to toggle between "Yes" and "No", indicating whether the **40 Km/h** maximum speed restriction option is restricted to **40 Km/h** (Yes) or unrestricted (No).
To save the desired option, depress and hold the navigation "up" or "down" key until the instrument cluster bleeps, indicating that the selection has been saved.
The default setting for this option is "YES".
Depress the “menu" key to continue navigating through the “HH" menus.

Channels 5and 6- Clutch quick fill adjustment

These channels are used to adjust the quick fill value for the transmission solenoids.
Scroll through the available channels using the navigation "up" and "down" keys. (see the table below for the description of each channel)

Channel	Description
Ch 5	A clutch solenoid quick fill adjustment
Ch 6	B clutch solenoid quick fill adjustment

After a delay the clutch solenoid code then current stored value will be displayed.

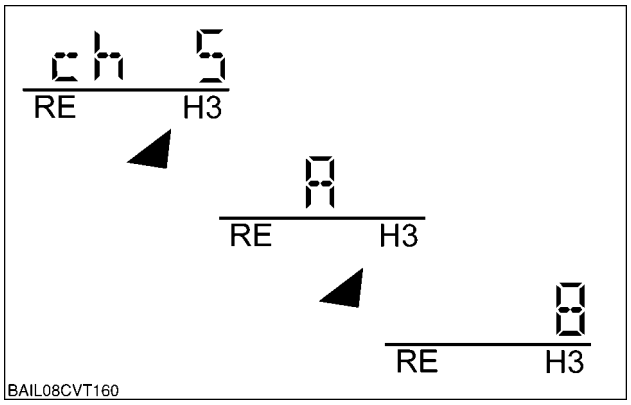

BAIL08CVT160 11

Use the navigation "up" and "down" keys to change the quick fill value between "0" and "255".
To save the desired value, depress and hold the navigation "up" or "down" key until the instrument cluster bleeps, indicating that the selection has been saved.
Depress the “menu" key to continue navigating through the “HH" menus.

https://tractormanualz.com/

ELECTRONIC DRAFT CONTROL OPTIONS

Select the Electronic Draft Control sub-system by depressing the "menu" key.
The upper section of the display will display “ch _ _".

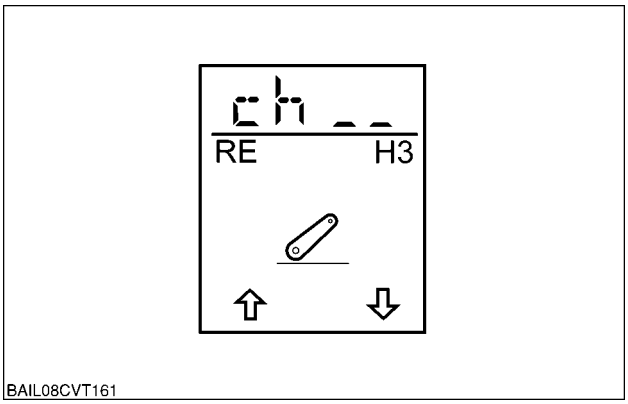

BAIL08CVT161 12

The required channel can be selected by using the navigation “up" and “down" keys (see the table below for the description of each channel).

Channel	Description
Ch 1	Diameter of the external hydraulic lift rams
Ch 2	Enable / Disable Electronic Draft Control
Ch 3	Enable / Disable Slip Control

Channel 1 - Diameter Of The External Hydraulic Lift Rams

Scroll through the available options using the navigation “up" or “down" key

The options available are in **(mm)**:

- 90
- 100
- 110

The default setting for this option is "def", corresponding to 90mm. If "def" is displayed then this channel must be used to select the appropriate ram size, otherwise fault code 1070 (hydraulic ram configuration not set) will be generated.

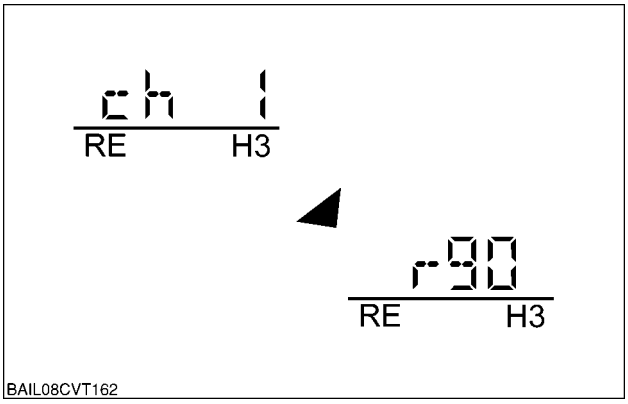

BAIL08CVT162 13

To save the desired option, depress and hold the navigation "up" or "down" key until the instrument cluster bleeps, indicating that the selection has been saved.

Depress the “menu" key to continue navigating through the “HH" menus.

https://tractormanualz.com/

Channel 2 - Enable / Disable Electronic Draft Control

Scroll through the available options using the navigation “up" or “down" key

The options available are:

- YES - Enable Electronic Draft Control
- NO - Disable Electronic Draft Control

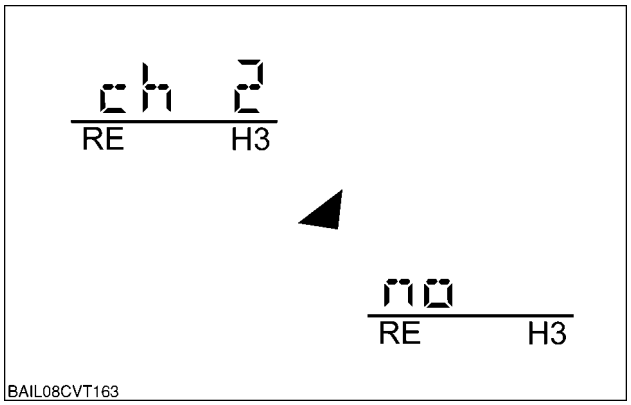

BAIL08CVT163 14

To save the desired option, depress and hold the navigation "up" or "down" key until the instrument cluster bleeps, indicating that the selection has been saved.

Depress the “menu" key to continue navigating through the “HH" menus.

Channel 3 - Enable / Disable Slip Control

Scroll through the available options using the navigation “up" or “down" key.

The options available are:

- YES - Enable Slip Control
- NO - Disable Slip Control

The default setting is NO but will be set to YES automatically if the slip control system is detected.
If the EDC option is disabled in channel 2 then this channel will not be available.

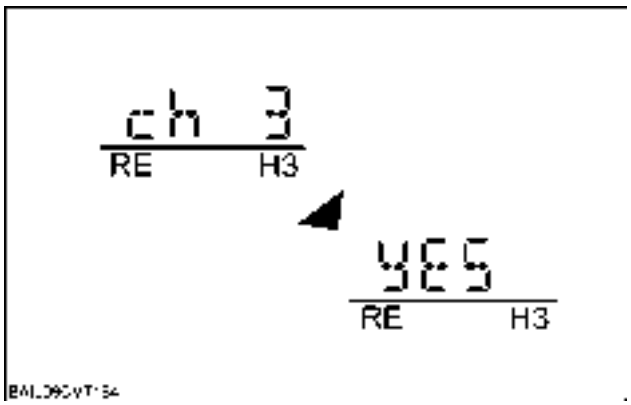

BAIL08CVT164 15

To save the desired option, depress and hold the navigation "up" or "down" key until the instrument cluster bleeps, indicating that the selection has been saved.

Depress the “menu" key to continue navigating through the “HH" menus.

https://tractormanualz.com/

ELECTRONIC ENGINE OPTIONS

Select the electronic engine sub-system by depressing the “menu" key.
The upper section of the display will display “ch _ _".

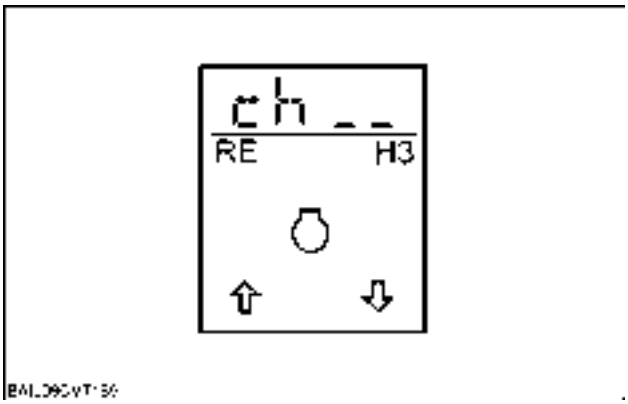

BAIL08CVT165 16

The required channel can be selected by using the navigation “up" and “down" keys (see the table below for the description of each channel).

Channel	Description
Ch 1	Dynamometer power boost test
Ch 2	Auto Modes Option
Ch 3	Grid heater selection
Ch 4	Fuel filter heater selection
Ch 5	Engine brake selection
Ch 6	Engine fan selection

https://tractormanualz.com/

Channel 1 - Dynamometer Power Boost Test

This channel is used to allow the tractor to be dynamometer tested with maximum powerboost.

NOTE: *The powerboost is only active for* ***45 minutes****.*

Scroll through the available options using the “up" or “down" key.

The options available are:

- "OFF"- dyno power boost test mode is off (normal vehicle operation)
- "Std" - dyno power boost test mode is on (straight unboosted curve without any limitations)
- "bSt" - dyno power boost test mode is on (straight boosted curve without any limitations)

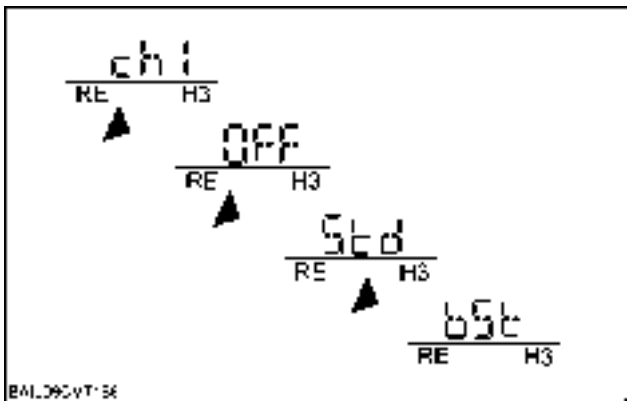

BAIL08CVT166 17

To save the desired option, depress and hold the navigation "up" or "down" key until the instrument cluster bleeps, indicating that the selection has been saved.

Depress the “menu" key to continue navigating through the “HH" menus.

Channel 2 - Not used

This channel is not used and "---" will be displayed.

Channel 3 - Grid heater selection

Scroll through the available options using the navigation “up" or “down" key.

The options available are:

- YES - Grid heater fitted
- NO - Grid heater not fitted

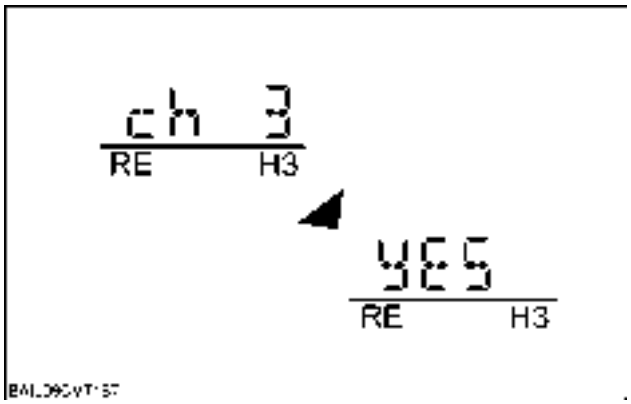

BAIL08CVT167 18

https://tractormanualz.com/

To save the desired option, depress and hold the navigation "up" or "down" key until the instrument cluster bleeps, indicating that the selection has been saved.
The default setting for this option is "YES".
Depress the “menu" key to continue navigating through the “HH" menus.

Channel 4- Fuel filter heater selection

Scroll through the available options using the navigation “up" or “down" key.

The options available are:

- YES - Fuel filter heater fitted
- NO - Fuel filter heater not fitted

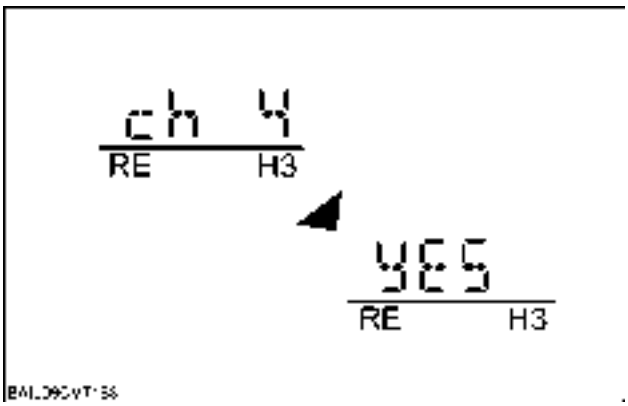

BAIL08CVT168 19

To save the desired option, depress and hold the navigation "up" or "down" key until the instrument cluster bleeps, indicating that the selection has been saved.
The default setting for this option is "NO".
Depress the “menu" key to continue navigating through the “HH" menus.

https://tractormanualz.com/

Channel 5- Engine brake selection

Scroll through the available options using the navigation “up" or “down" key.

The options available are:

- YES - Engine brake fitted
- NO - Engine brake not fitted

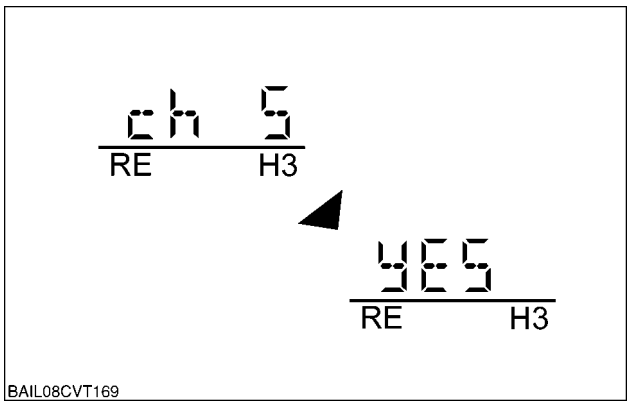

BAIL08CVT169 20

To save the desired option, depress and hold the navigation "up" or "down" key until the instrument cluster bleeps, indicating that the selection has been saved.
The default setting for this option is "NO".
Depress the “menu" key to continue navigating through the “HH" menus.

https://tractormanualz.com/

Channel 6- Engine fan selection

Scroll through the available options using the navigation “up" or “down" key.

The options available are:

- V- Vistronic type fan fitted
- r- Reversible type fan fitted

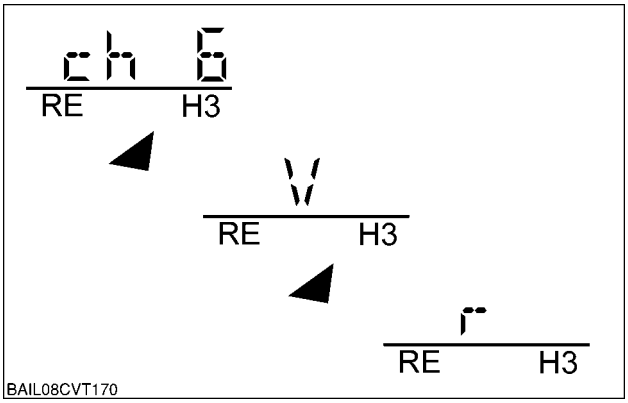

BAIL08CVT170 21

To save the desired option, depress and hold the navigation "up" or "down" key until the instrument cluster bleeps, indicating that the selection has been saved.
The default setting for this option is "V" (vistronic fan type).
Depress the “menu" key to continue navigating through the “HH" menus.

REAR PTO OPTIONS

Select the Rear PTO sub-system by depressing the “menu" key.
The upper section of the display will display “ch _ _".

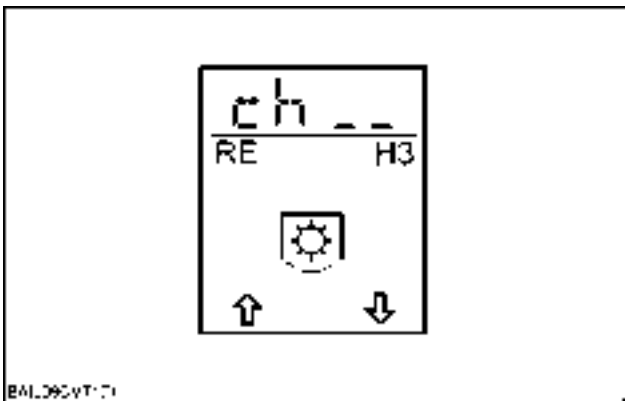

BAIL08CVT171 22

The required channel can be selected by using the navigation “up" and “down" keys (see the table below for the description of each channel).

Channel	Description
Ch 1	Not used
Ch 2	PTO fender switches selection
Ch 3	PTO drop out speed selection
Ch 4	Electronic shiftable PTO option

Channel 1 - Not used

This channel is not used and "---" will be displayed.

https://tractormanualz.com/

Channel 2 - PTO Fender Switches Selection

This channel is used to disable/enable the rear PTO fender switch.
Scroll through the available options using the navigation “up" or “down" key

The options available are:

- YES - Enable rear PTO fender switches
- NO - Disable rear PTO fender switches

If the vehicle is fitted with external rear fender PTO switches then this option must be setup before the PTO is calibrated.

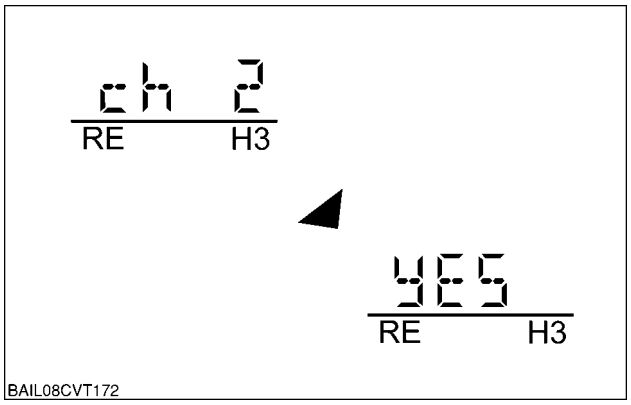

BAIL08CVT172 23

To save the desired option, depress and hold the navigation "up" or "down" key until the instrument cluster bleeps, indicating that the selection has been saved.

Depress the “menu" key to continue navigating through the “HH" menus.

Channel 3 - PTO Drop Out Speed Selection

This channel is used to adjust the engine speed below which the PTO will drop out.
After a delay the current setting will be displayed.

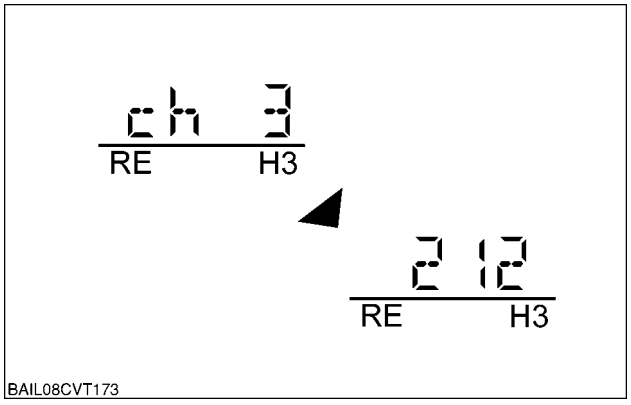

BAIL08CVT173 24

Use the navigation "up" and "down" keys to increase or decrease the setting in **10 RPM** increments between **0 - 550 RPM**.
To save the desired option, depress and hold the navigation "up" or "down" key until the instrument cluster bleeps, indicating that the selection has been saved.
The default value on a new module or after an H8 operation is **0 RPM**.
Depress the “menu" key to continue navigating through the “HH" menus.

https://tractormanualz.com/

Channel 4- Electronic shiftable PTO option

This channel is used to select the electronic shiftable PTO if fitted to the vehicle.
Scroll through the available options using the navigation “up" or “down" key

The options available are:

- YES - Electronic shiftable PTO fitted
- NO - Electronic shiftable PTO not fitted

The default value is "YES".

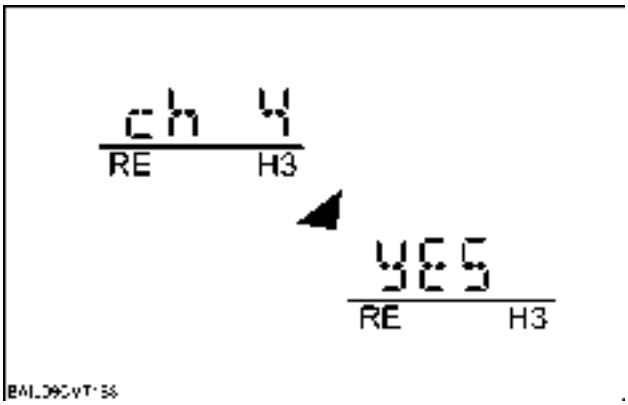

BAIL08CVT168 25

To save the desired option, depress and hold the navigation "up" or "down" key until the instrument cluster bleeps, indicating that the selection has been saved.

Depress the “menu" key to continue navigating through the “HH" menus.

DIFFERENTIAL LOCK AND FOUR WHEEL DRIVE OPTIONS

Select the differential lock and four wheel drive sub-system by depressing the “menu" key.
The upper section of the display will display “ch _ _".

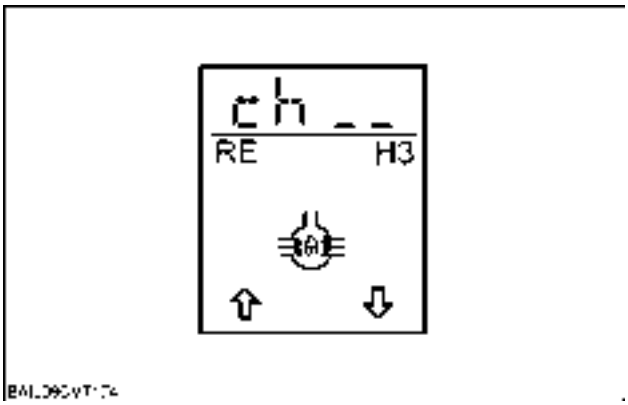

BAIL08CVT174 26

The required channel can be selected by using the navigation “up" and “down" keys (see the table below for the description of each channel).

Channel	Description
Ch 1	Axle type
Ch 2	Not used
Ch 3	Front axle angles
Ch 4	Four wheel drive brake engagement speed selection

https://tractormanualz.com/

Channel 1 - Axle Type

This channel is used to select the front axle type.
Scroll through the available options using the navigation “up" or “down" key

The options available are:

- 0 - Standard front axle
- 1 - Super Steer front axle

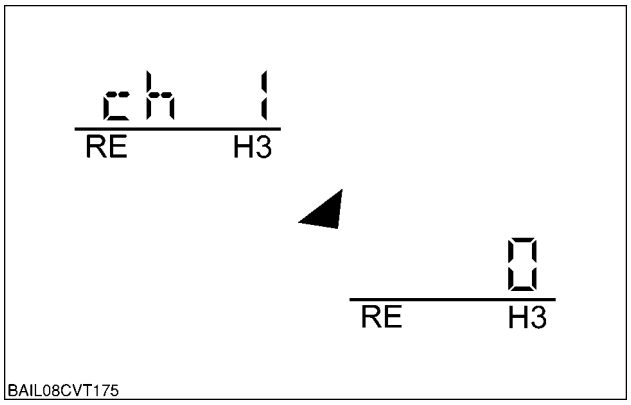

BAIL08CVT175 27

To save the desired option, depress and hold the navigation "up" or "down" key until the instrument cluster bleeps, indicating that the selection has been saved.
The default setting for this option is "0".
Depress the “menu" key to continue navigating through the “HH" menus.

Channel 2- Four Wheel Drive Selection

This channel is not used and "---" will be displayed.

Channel 3 - Front Axle Angles

This channel is used to select the steering angle at which the Auto Difflock and Auto Four Wheel Drive functions engage and disengage.

Scroll through the available options using the navigation “up" or “down" key.
The available options (0, 1, 2 or 3) are shown in the table below with a description of each option.

Standard Axle

	0-10Km/h	0-10Km/h	0-10Km/h	0-10Km/h	10-15Km/h	10-15Km/h	10-20Km/h	10-20Km/h
	Auto Four Wheel Drive	Auto Four Wheel Drive	Auto Difflock	Auto Difflock	Auto Difflock	Auto Difflock	Auto Four Wheel Drive	Auto Four Wheel Drive
	Degrees Right	Degrees Left	Degrees Right	Degrees Left	Degrees Right	Degrees Left	Degrees Right	Degrees Left
Option 0	20º	18.5º	15º	14.25º	10º	9.5º	15º	14.2º
Option 1	45º	37.5º	20º	18.5º	10º	9.5º	40º	34º
Option 2	15º	14.2º	10º	9.5º	10º	9.5º	15º	14.2º
Option 3	11.7º	10.9º	5º	4.5º	10º	9.5º	15º	14.2º

https://tractormanualz.com/

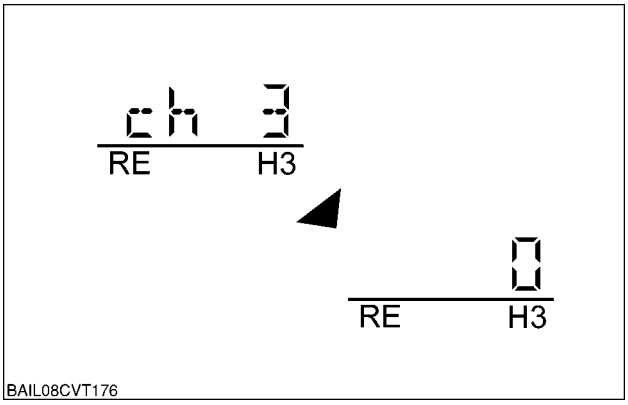

BAIL08CVT176 28

To save the desired option, depress and hold the navigation "up" or "down" key until the instrument cluster bleeps, indicating that the selection has been saved.
Depress the “menu" key to continue navigating through the “HH" menus.

https://tractormanualz.com/

Channel 4 - Four Wheel Drive Brake Engagement Speed Selection

This channel is used to select the ground speed below which four wheel drive braking will not occur.
Scroll through the available options using the navigation “up" or “down" key.
The available options (0, 1, 2, 3 or 4) are shown in the table below with a description of each option.

	Option 4	Option 3	Option 2	Option 1	Option 0
Four wheel braking engagement, if wheel speed is greater than or equal to:	Default **6.4 Km/h**.	**4.8 Km/h**.	**3.2 Km/h**.	**1.6 Km/h**.	**0 Km/h**.

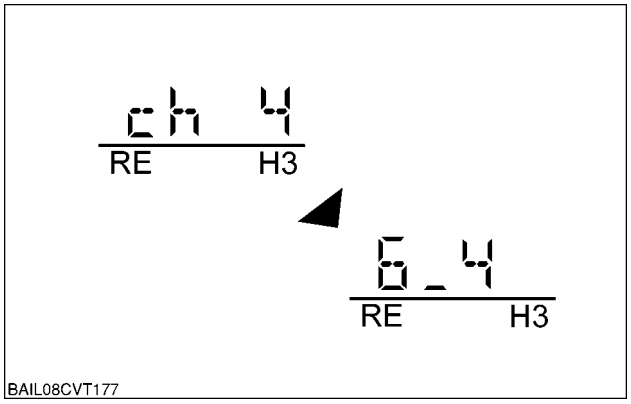

BAIL08CVT177 29

To save the desired option, depress and hold the navigation "up" or "down" key until the instrument cluster bleeps, indicating that the selection has been saved.
Depress the “menu" key to continue navigating through the “HH" menus.

https://tractormanualz.com/

FRONT EHR OPTIONS

Select the Front EHR sub-system by depressing the “menu" key.
The upper section of the display will display “ch _ _".

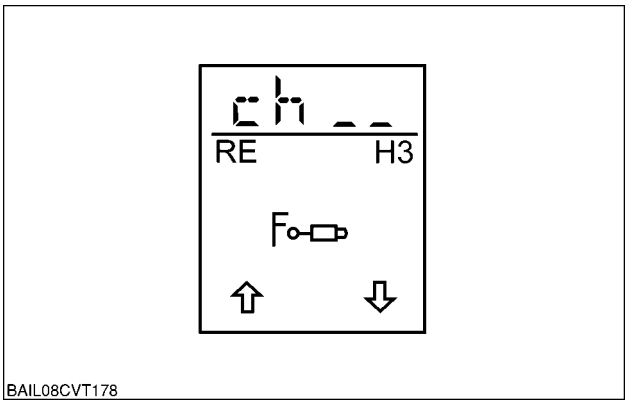

BAIL08CVT178 30

The required channel can be selected by using the navigation “up" and “down" keys (see the table below for the description of each channel).

Channel	Description
Ch 1	Front EHR option selection
Ch 2	Front Loader / Front Hitch selection
Ch 3	not used
Ch 4	Number of EHR setup
Ch 5	High flow pump selection

Channel 1 - Front EHR Option Selection

This channel is used to disable/enable the front EHR.
Scroll through the available options using the navigation “up" or “down" key.

The options available are:

- Yes - Enable front EHR
- No - Disable front EHR

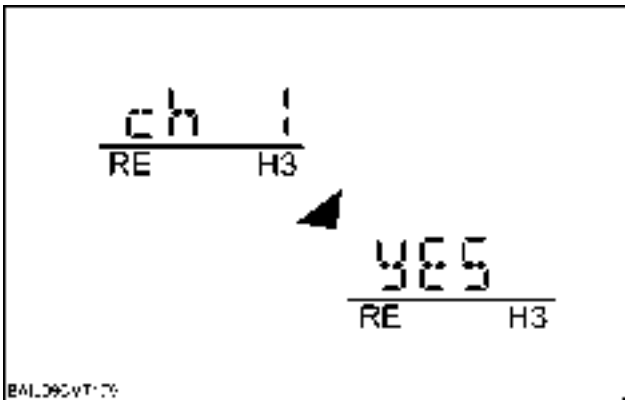

BAIL08CVT179 31

To save the desired option, depress and hold the navigation "up" or "down" key until the instrument cluster bleeps, indicating that the selection has been saved.

Depress the “menu" key to continue navigating through the “HH" menus.

https://tractormanualz.com/

Channel 2 - Front Loader / Front Hitch Selection

This channel is used to select if the front EHRs are used in conjunction with the front hitch or the front loader. Scroll through the available options using the navigation “up" or “down" key.

The options available are:

- nonE - Neither selected
- Htch - Front hitch selected
- LOAd - Front loader selected

NOTE: *If the front EHR’s are to be used to control the front hitch then the front hitch option must also be enabled in the "RM" module.*

NOTE: *If Front Hitch is selected then the Front EHR valve 1 will be reserved for front hitch operation. If Front Loader is selected then the front EHR valves 1-3 will be reserved for front loader operation. If None is selected then all the front EHR valves will be available for use.*

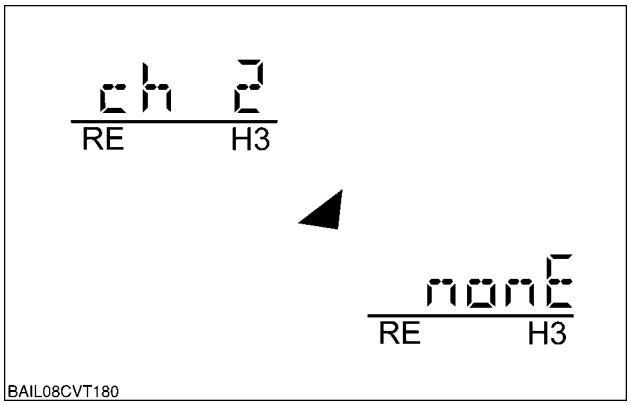

BAIL08CVT180 32

To save the desired option, depress and hold the navigation "up" or "down" key until the instrument cluster bleeps, indicating that the selection has been saved.
Depress the “menu" key to continue navigating through the “HH" menus.

Channel 3

This channel is not used and "---" will be displayed.

https://tractormanualz.com/

Channel 4 - Number of EHR Setup

When a new module is installed or the H8 procedure is completed, automatic detection for the number of remotes is used. If at any time the number of fitted remotes needs to be changed then this setup channel is used.

Scroll through the available options using the navigation “up" or “down" key.

The options available are:

- 2
- 3
- 4

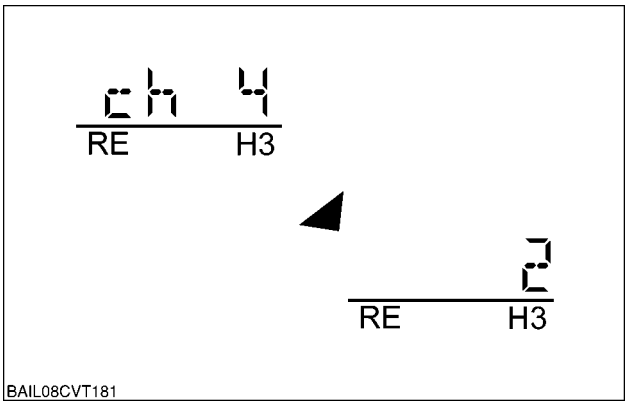

BAIL08CVT181 33

To save the desired option, depress and hold the navigation "up" or "down" key until the instrument cluster bleeps, indicating that the selection has been saved.
Depress the “menu" key to continue navigating through the “HH" menus.

Channel 5 - High Flow Pump Selection

This channel is used to disable/enable the high flow pump.
Scroll through the available options using the navigation “up" or “down" key.

The options available are:

- Yes - Enable high flow pump
- No - Disable high flow pump

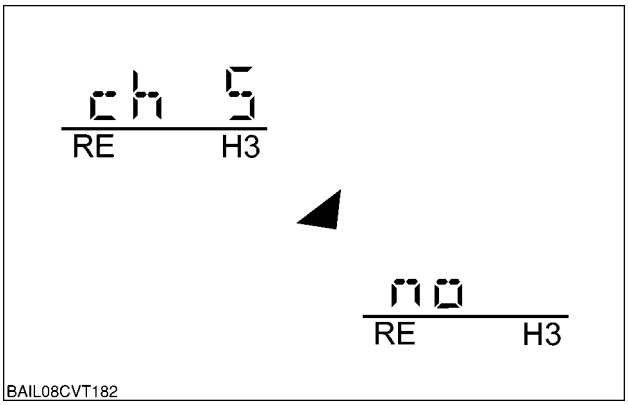

BAIL08CVT182 34

To save the desired option, depress and hold the navigation "up" or "down" key until the instrument cluster bleeps, indicating that the selection has been saved.

Depress the “menu" key to continue navigating through the “HH" menus.

https://tractormanualz.com/

H4 - VIEW SOFTWARE REVISION LEVEL

Common to all sub-systems.

H4 Menu Screen Select Diagram

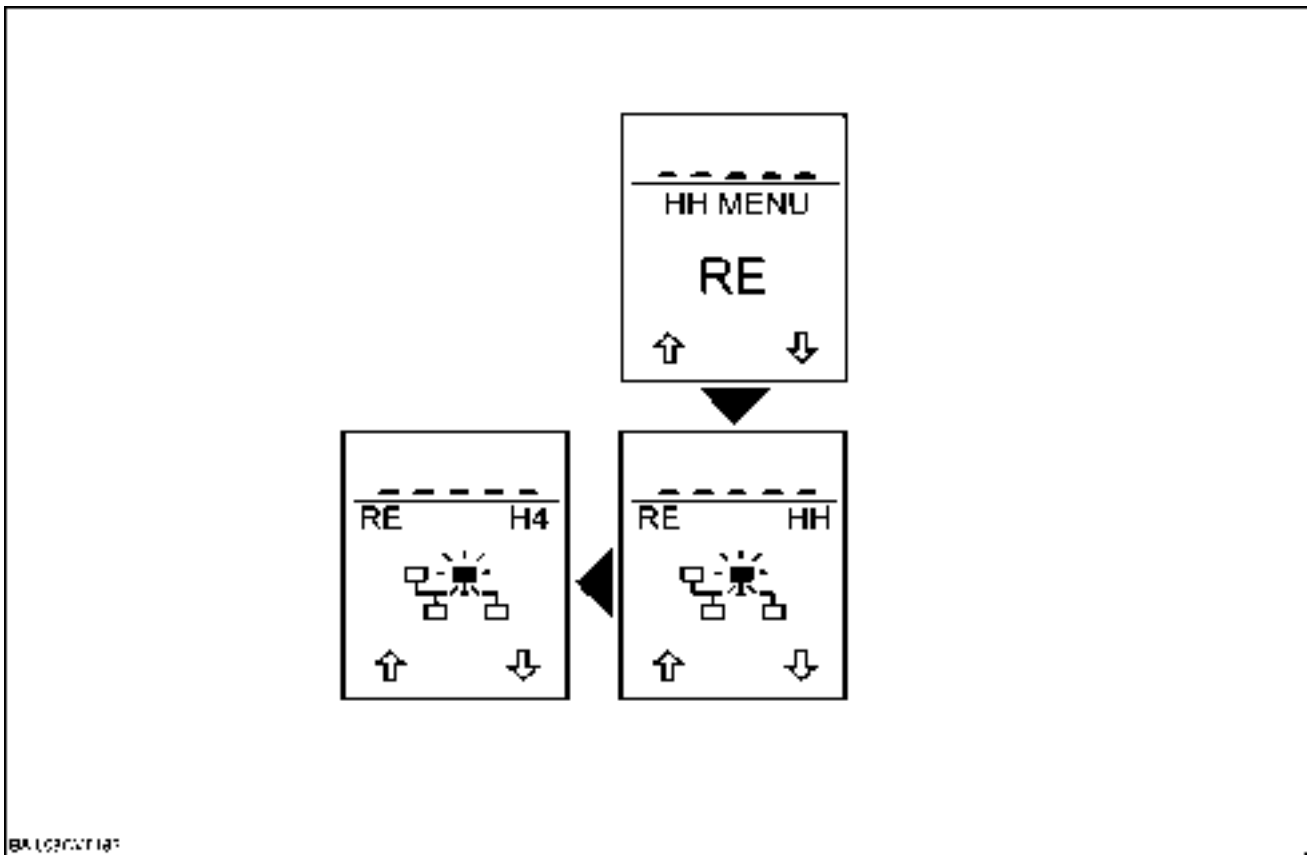

BAIL08CVT183 35

Select the H4 menu by depressing the "menu" key.

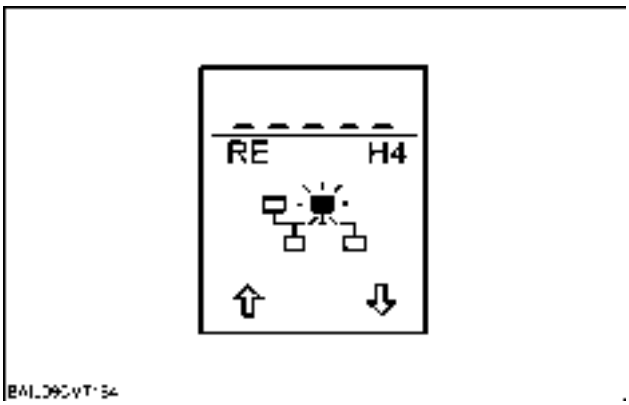

BAIL08CVT184 36

https://tractormanualz.com/

The upper section of the display will automatically cycle through the software release, as the example shown and return to allow navigation of the "HH" menus.

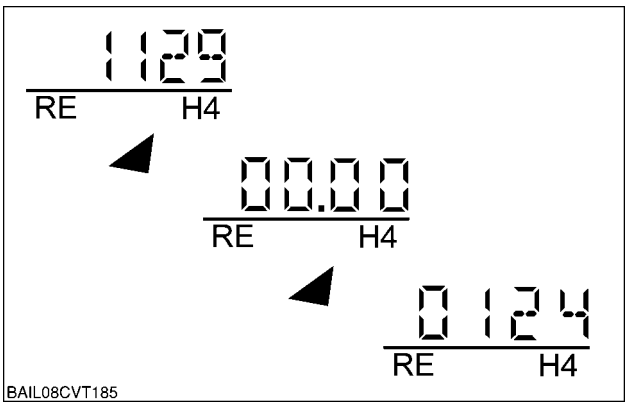

BAIL08CVT185 37

https://tractormanualz.com/

H5 - SWITCH OPERATION TEST

This menu displays a designated code when a switch transition is detected.
Common to all sub-systems.

H5 Menu Screen Select Diagram

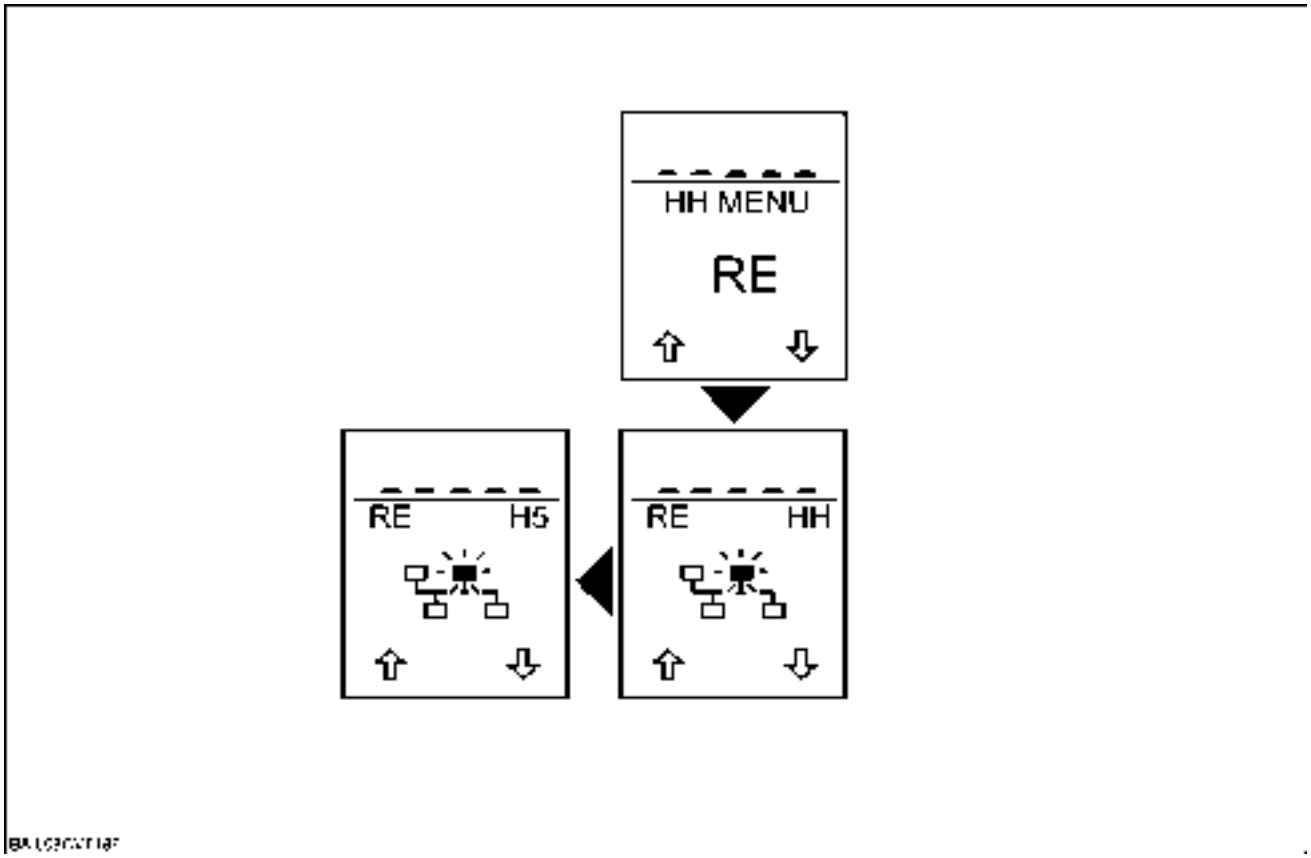

BAIL08CVT186 38

Select the H5 menu by depressing the "menu" key.

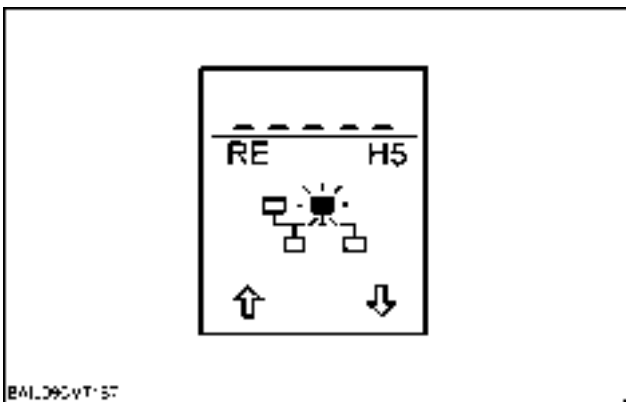

BAIL08CVT187 39

https://tractormanualz.com/

The upper section of the display will display "d _ _"

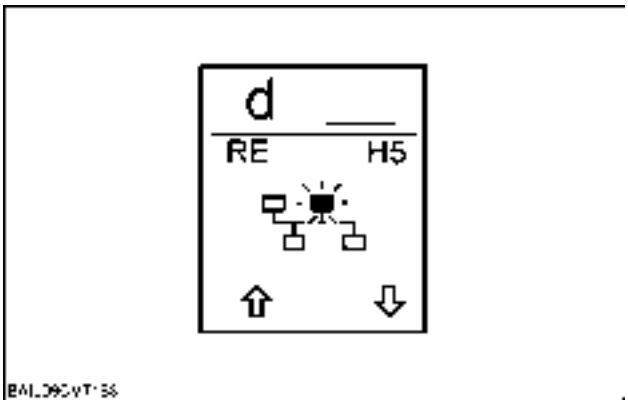

BAIL08CVT188 40

When a switch is operated, a code will be displayed and an audible tone should be heard to indicate the correct function.
If a switch code is not displayed and the audible tone not heard, a 'wiggle' test can be performed on the related wiring, while watching the display or listening for the audible tone, to help locate the fault.

NOTE: *If the keystart switch is turned to the "crank" position, with the shuttle lever in neutral and the clutch pedal down, a switch disagreement error may occur.*

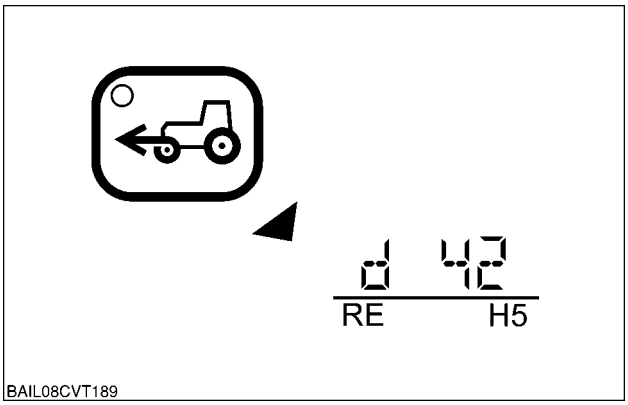

BAIL08CVT189 41

Channel	Control unit plug connection	Pin number	Description
d0	**-**	**-**	**No switch activated or two switches activated at the same time**
d1	CN1B	30	Rear control switch for the EDC - Lower
d2	CN1B	29	Rear control switch for the EDC - Raise
d3	via CAN		EDC work switch (on hand controller)
d4	via CAN		EDC raise switch (on hand controller)
d7	CN3A	15	Connection of the NASO lighting (disconnect and reconnect the flasher unit)
d8	CN1B	21	Crank detect switch
d10	CN4	9	Seat switch
d11	CN4	10	Handbrake switch
d12	CN1B	22	Left brake pedal switch
d13	CN1B	23	Right brake pedal switch
d14	CN1A	8	Clutch pedal switch (engine running and transmission in forward or reverse)
d15	CN1B	12	Switch for the shuttle lever - Forwards
d16	CN1B	13	Switch for the shuttle lever - Reverse
d23	CN1B	27	Momentary shuttle lever forward/reverse switch
d24	CN4	16	Momentary shuttle lever neutral switch

https://tractormanualz.com/

Channel	Control unit plug connection	Pin number	Description
d0	**-**	**-**	**No switch activated or two switches activated at the same time**
d31	CN3A	14	Air conditioning pressure switch (bridge switch to test with engine off)
d32	CN3A	17	EDC lock switch
d33	CN1B	19	Radar present input (disconnect radar to test)
d38	via CAN	-	Differential lock switch - Manual
d39	via CAN	-	Differential lock switch - Automatic
d41	via CAN	-	All-wheel drive switch - Manual
d42	via CAN	-	All-wheel drive switch - Automatic
d44	CN3A	12	Rear PTO switch - normally open
d45	CN3A	13	Rear PTO switch - normally closed
d46	CN4	24	Hi flow not present input
d47	CN3B	24	Switch for rear PTO brake
d49	via CAN	-	Rear PTO switch - management
d50	via CAN	-	HTS switch record mode
d53	CN1B	24	Transmission oil pressure switch (bridge switch to test with engine off)
d55	via CAN	-	Engine speed switch - decrease
d56	via CAN	-	Engine speed switch - Increase
d60	CN3B	32	Foot throttle not at idle switch
d63	CN3A	18	Fender switch of the rear PTO - normally open
d64	CN3A	3	Fender switch of the rear PTO - normally closed
d80	via CAN	-	HTS AUTO switch
d81	via CAN	-	HTS Manual switch
d93	CN4	25	Front HPL present link (disconnect and reconnect the 13-way connector)
d94	CN3A	16	EHR lock switch
d95	via CAN	-	EHR 1 program / motor mode switch
d96	via CAN	-	EHR 1 program / motor mode switch
d104	via CAN	-	HTS step switch on hand controller
d105	via CAN	-	Cruise switch on hand controller
d111	CN3A	20	PTO speed select switch - speed 1 (1000)
d112	CN4	18	PTO speed select switch - speed 2 (1000E)
d113	CN4	4	PTO speed select switch - neutral
d122	via CAN	-	CRPM speed 1 selection switch
d123	via CAN	-	CRPM speed 2 selection switch
d125	via CAN	-	Auto engine brake switch
d126	via CAN	-	Engine brake pedal switch
d127	via CAN	-	Reversible fan switch
d136	via CAN	-	Arm rest unit forward switch
d137	via CAN	-	Arm rest unit reverse switch
d138	via CAN	-	Accelerator/shuttle speed switch
d139	via CAN	-	Switching button EPC F1/F2 to F3/F4 on the joystick
d165	via CAN	-	EHR float control switch
d169	via CAN	-	Range increase switch (on hand controller)
d170	via CAN	-	Range decrease switch (on hand controller)

CN1a = **X092** CN1b = **X093** CN2 = **X091**
CN3a = **X094** CN3b = **X095** CN4 = **X097**

https://tractormanualz.com/

H6 - VEHICLE INFORMATION VIEW

H6 Menu Screen Select Diagram

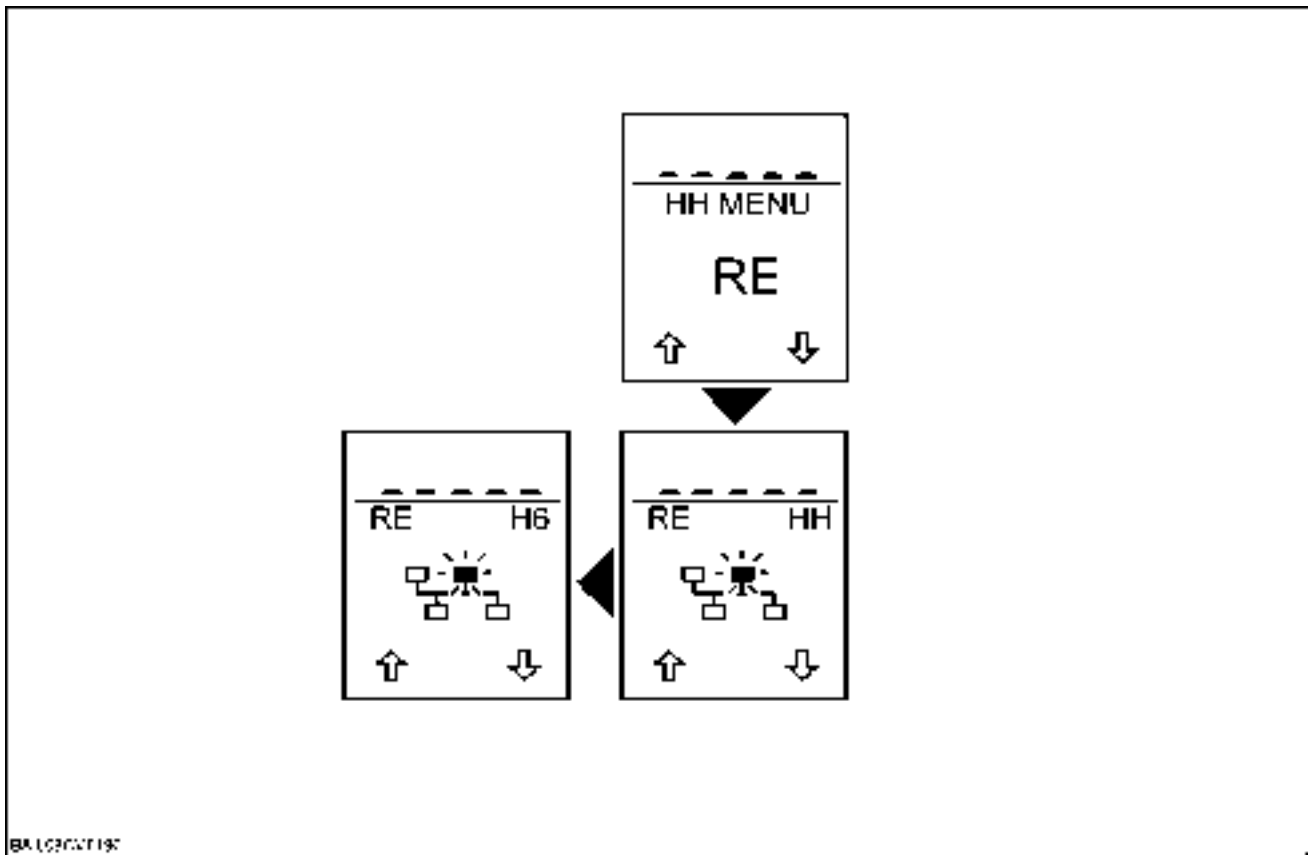

BAIL08CVT190 42

Select the H6 menu by depressing the "menu" key.

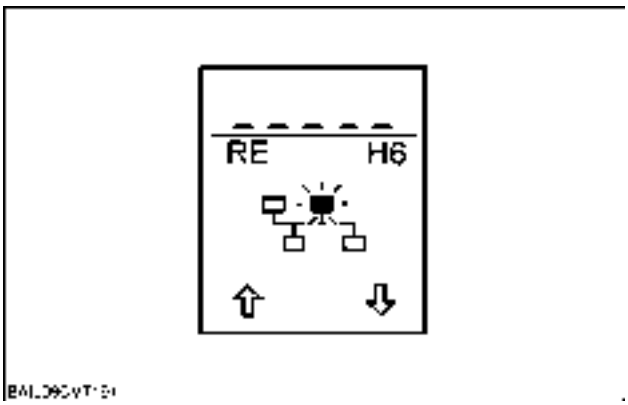

BAIL08CVT191 43

The upper section of the display will automatically cycle through as the example:

- 4 - 2 = Driveline ranges
- 40 = Transmission speed
- 210 = Engine power

https://tractormanualz.com/

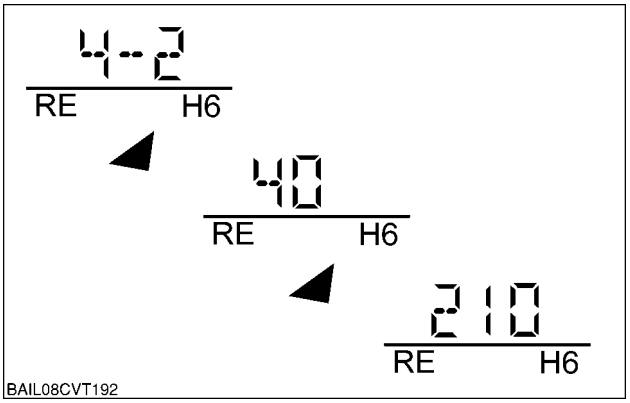

BAIL08CVT192 44

At the end of the cycle the display will return to continue navigating through the “HH" menus.

https://tractormanualz.com/

H7 - TEST MODES

This menu is used to check the clutch disconnect switch adjustment and to test the transmission synchronisers.

H7 Menu Screen Select Diagram

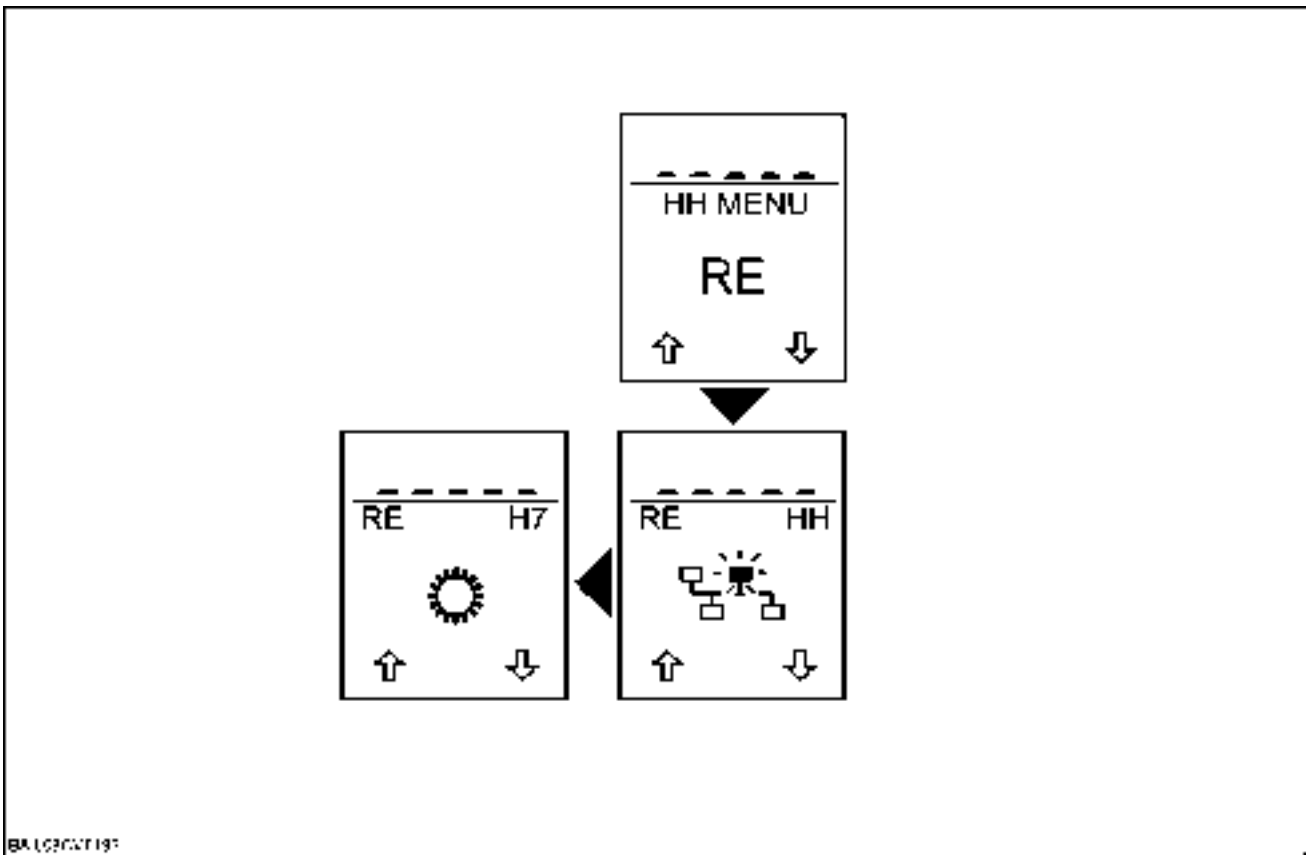

BAIL08CVT193 45

Select the H7 menu by depressing the "menu" key.

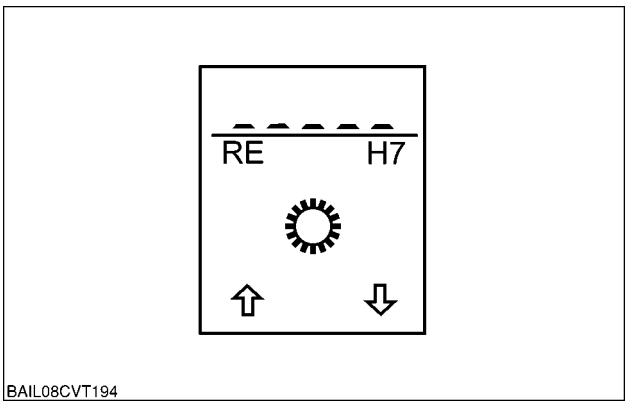

BAIL08CVT194 46

https://tractormanualz.com/

The upper section of the display will display "ch _ _"

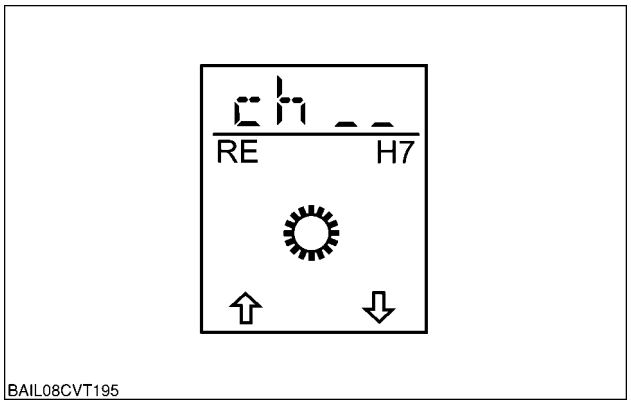

BAIL08CVT195 47

The required channel can be selected by using the navigation “up" and “down" keys (see the table below for the description of each channel).

Channel	Description
Ch 1	Clutch disconnect switch test
Ch 2	Manual clutch adjustment
Ch 3	Manual quick fill adjustment
Ch 4	Clutch pressure test
Ch 5	Synchroniser test
Ch 6	Not used

https://tractormanualz.com/

Channel 1 - Clutch Disconnect Switch Test

This channel is used to display the clutch pedal position and status. In addition it also displays the oil temperature.

The clutch position is shown as a percentage of travel between (99-0):

- 99 = Clutch pedal is fully up
- 0 = Clutch pedal is fully down

The clutch position is also shown as in it’s switch state:

- O = Clutch pedal switch is open
- C = Clutch pedal switch is closed

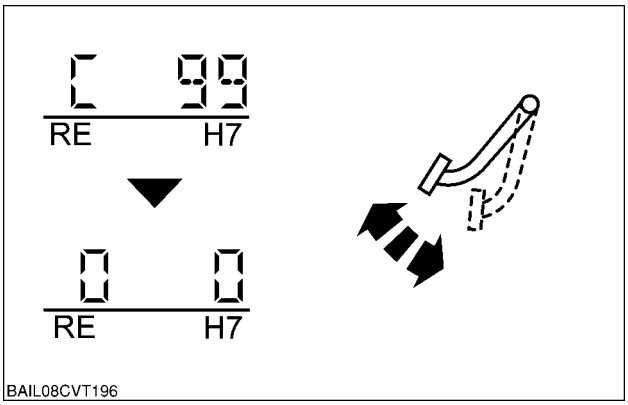

BAIL08CVT196 48

If the clutch pedal has been left in the fully up position for more than 5 seconds, the oil temperature will be displayed in the upper section of the display.

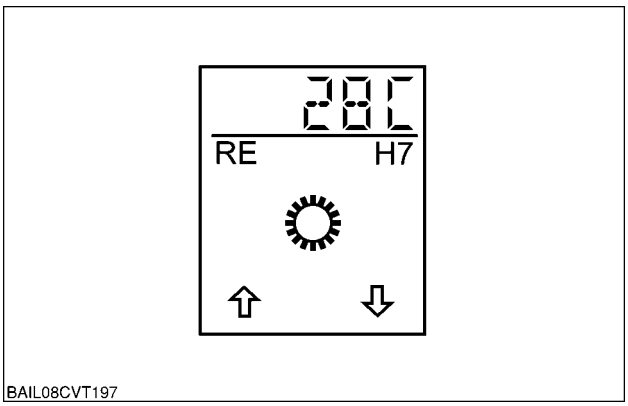

BAIL08CVT197 49

Depress the “menu" key to continue navigating through the “HH" menus.

https://tractormanualz.com/

Channel 2 - Manual Clutch Adjustment

This channel is used to manually adjust and test the calibration values for each clutch.

Select the clutch to be adjusted by depressing the clutch pedal and cycling the shuttle lever.
Shifting the shuttle lever forward will select clutch A..
Shifting the shuttle lever into reverse will select clutch B.

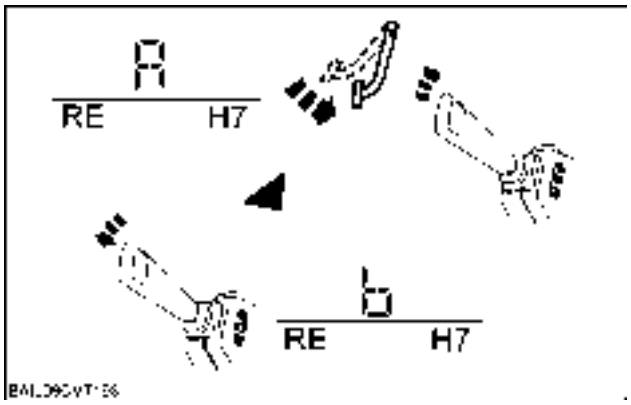

BAIL08CVT198A 50

After a delay when the required clutch is selected, the current stored value will be shown in the upper section of the display.

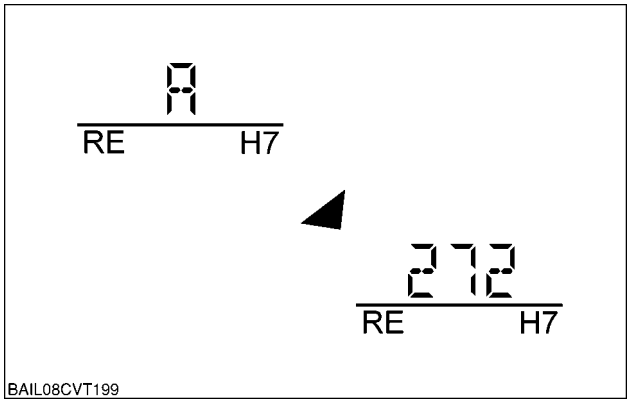

BAIL08CVT199 51

The calibration values can be adjusted using the forward and reverse buttons on the hand controller.
To test the calibration, leave the shuttle lever out of neutral and fully release the clutch pedal. one clutch will be applied at low pressure to provide a torque path through the transmission, then the clutch that is being adjusted will be applied at it’s bite point pressure so that it should just begin to engage.
To test the same clutch, depress the clutch pedal slightly and release it again.

https://tractormanualz.com/

Channel 3 - Manual Quick Fill Adjustment

This channel is used to adjust and test the quick fill settings for each clutch.

Select channel 3 using the menu button.

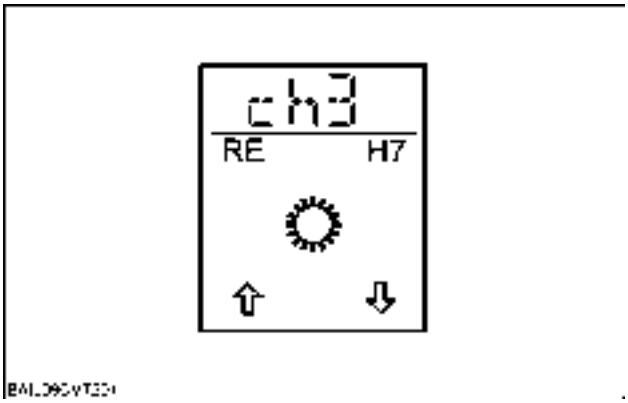

BAIL08CVT201 52

Select the clutch to be adjusted by depressing the clutch pedal and shifting the shuttle lever into forward for clutch A and shifting into reverse for Clutch B.
The display will show the current quick fill value for the selected clutch. To adjust the quickfill depress the forward button on the hand controller to increase the value and the reverse button to decrease the value.

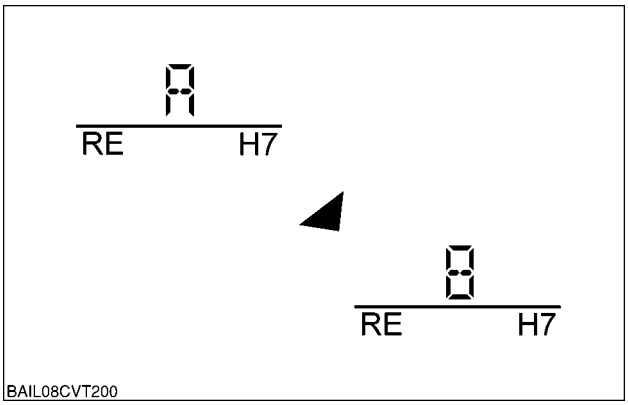

BAIL08CVT200 53

Depress the “menu" key to continue navigating through the “HH" menus.

https://tractormanualz.com/

Channel 4- Clutch Pressure Test

This channel is used to test the pressure for each clutch.

With the diagnostic tool installed start the engine and select channel 4 of H7 for the RE module.

Ensure that the handbrake is applied and place the shuttle lever into the forward position.
The handbrake must be ON, If the handbrake is in the OFF position the code ’U20’ will be shown on the display.

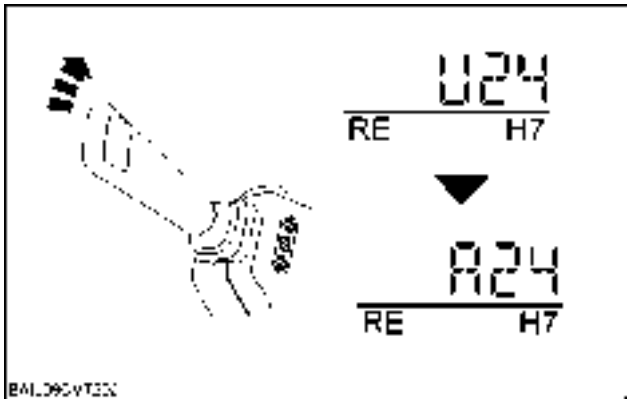

BAIL08CVT202 54

Select the clutch to be tested by depressing the forward button on the hand controller. The display will change between ’A’ and ’b’ each time the button is pressed

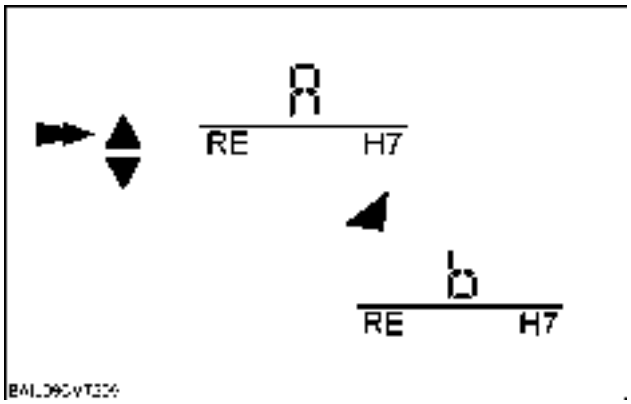

BAIL08CVT205 55

The clutch pedal is used to select the test pressure. Pressing the reverse direction button on the hand controller will energise the selected valve at the pressure determined by the clutch pedal position and display the clutch pressure value.
If the clutch pedal position is less than **30 %** then the display will show **-20 bar**.
At **30 %** pedal position the clutch pressure is set at **0 bar** and this rises linearly to **24 bar** as the clutch pedal is lifted to **85 %**.
Above **75 %** of clutch pedal travel the pressure is set to the maximum pressure of **24 bar**.
As the clutch pedal is raised from fully depressed to fully released the display will show ’-20’ rising to ’24’.

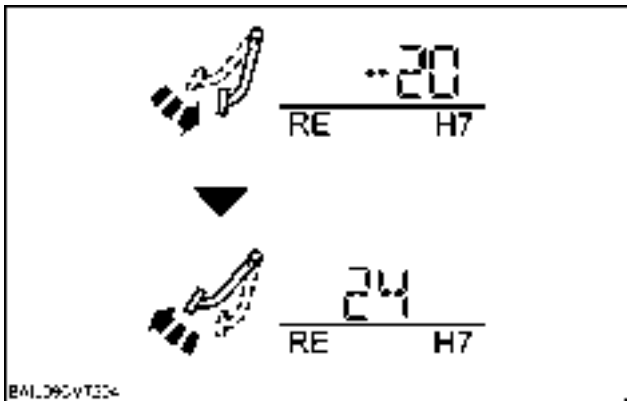

BAIL08CVT204 56

https://tractormanualz.com/

Channel 5- Synchroniser test

This channel tests the transmission synchronisers.

Ensure that the handbrake is applied and place the shuttle lever into the forward position.
The handbrake must be ON, If the handbrake is in the OFF position the code ’U20’ will be shown on the display.
The transmission is disabled during this procedure.

1. Select the synchroniser to test by pressing the forward/reverse buttons on the hand controller, the display will change between, ’F1-F3’, ’F2-R1’ and ’F4-R2’, each time the button is pressed.

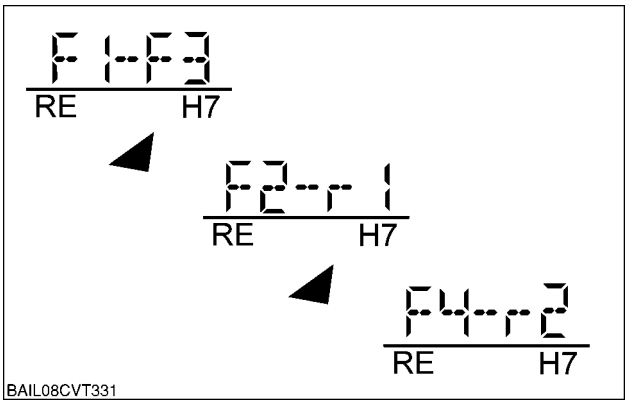

BAIL08CVT331 57

2. Once the synchroniser has been selected, move the shuttle lever forward to test the engagement position, or press the neutral button on the shuttle lever to test the synchroniser position when in neutral.

   NOTE: *The synchroniser will require a few seconds to complete the test.*

3. The display will then show the synchroniser position according to the table below.
4. When a synchroniser is engaged the corresponding valve can be activated by using the clutch pedal. The display will show the solenoid current.

Synchroniser position	Minimum allowed value	Maximum allowed value
F1	62	249
F2	62	249
F3	731	962
F4	731	962
R1	731	962
R2	62	249
N	420	580

https://tractormanualz.com/

H8 - CLEAR ELECTRICAL ERASABLE PROGRAMMABLE READ ONLY MEMORY (EEPROM)

This menu clears calibration values and stored error codes by resetting all EEPROM values back to default. EEPROM is where all calibration values and error codes are stored. This memory is retained even if there is no power to the controller, i.e. if the battery is disconnected.

NOTE: *H8 will not change the configuration settings. The H3 menu mode must be used for this.*

NOTE: *To erase only the stored error codes and not affect the calibration data use the HC menu mode.*

H8 Menu Screen Select Diagram

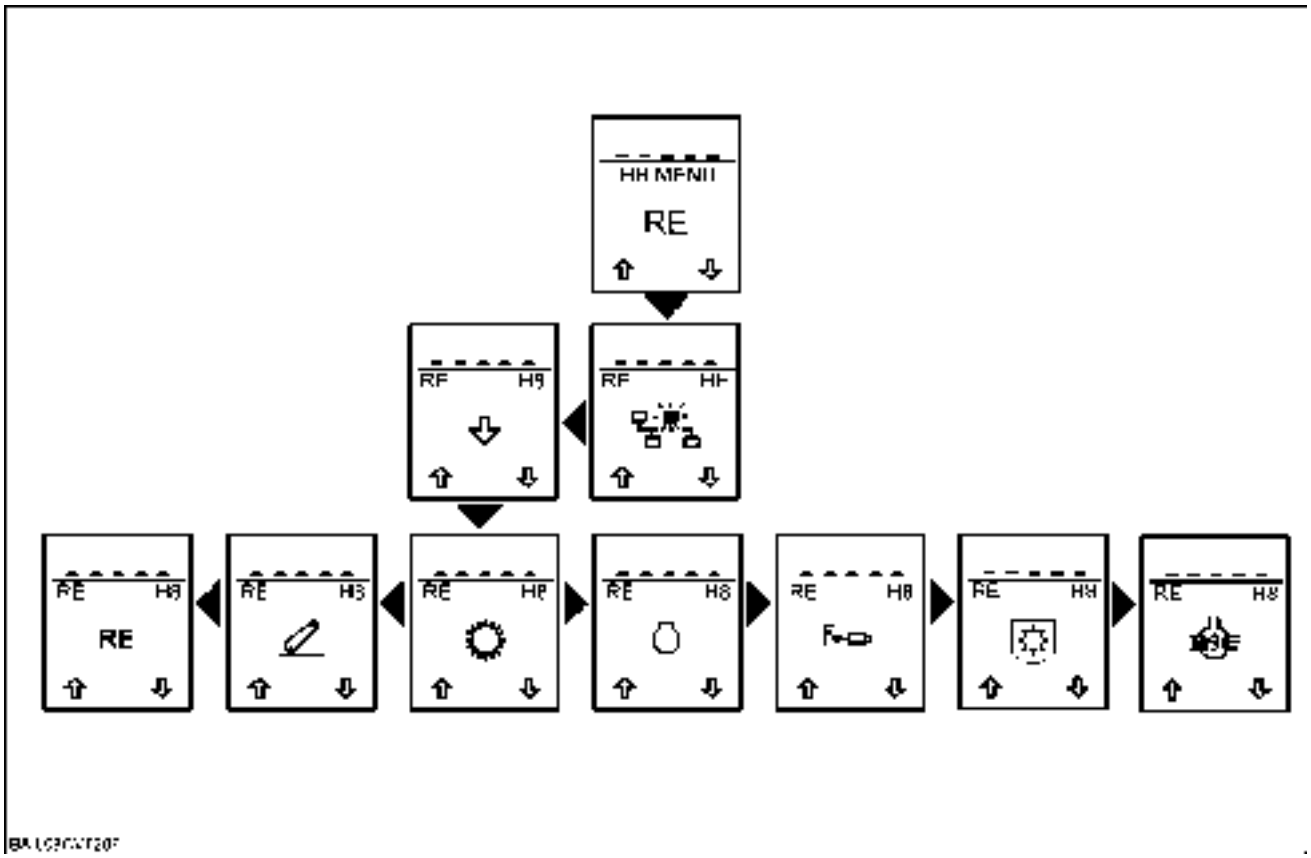

BAIL08CVT206 58

IMPORTANT: *By selecting the screen display with the controller identifier "RE" displayed will reset the EEPROM in all the sub-systems.*

https://tractormanualz.com/

If only a specific sub-system EEPROM requires to be reset, select the sub-system that requires the EEPROM to be reset by depressing the "menu" key, as the example shown.

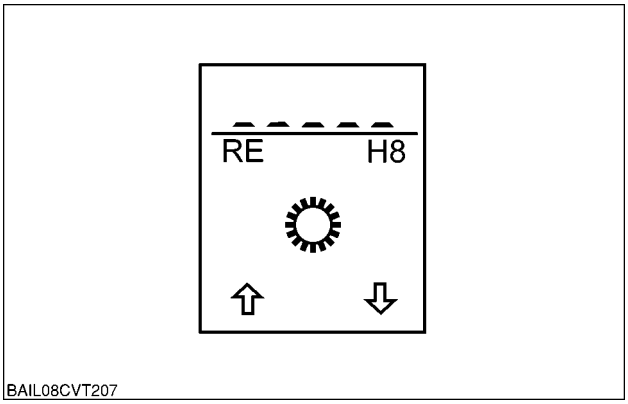

BAIL08CVT207 59

The upper section of the display will display “EECL" .

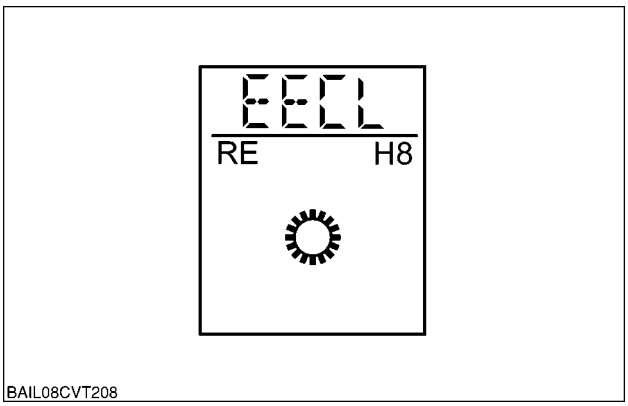

BAIL08CVT208 60

⚠ CAUTION ⚠

H8 will clear all calibrations values and stored error codes.

B006

NOTE: *If the navigation “down" key is released before the countdown finishes, the procedure will be aborted.*

Depress and hold the navigation “down" key to confirm the resetting of the EEPROM.
The upper section of the display will countdown from 5 to 1, then “EE" will be displayed to indicate the EEPROM has been cleared.
Turn the keystart OFF.

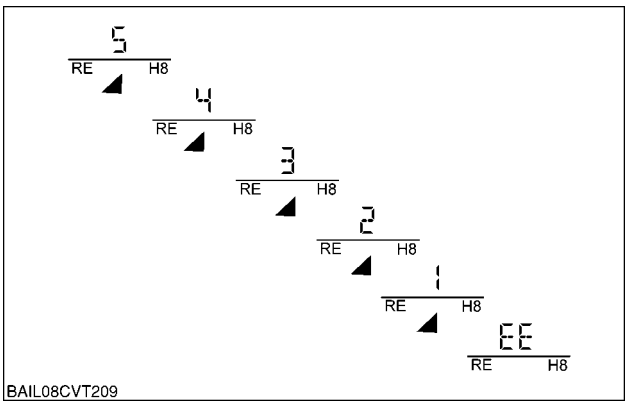

BAIL08CVT209 61

NOTE: *If the "down" key is released before the countdown finishes, the procedure will be aborted.*

Turn the keystart OFF.

https://tractormanualz.com/

H9 - VOLTMETER

This menu is used to verify the operation of various potentiometers, voltage supplies, and solenoid current circuits. If an intermittent fault is detected within a circuit, a 'wiggle' test can be performed on the related wiring while watching the display for sudden changes in values, to help locate the area where the fault exists.

NOTE: *The vehicle may be driven while in this menu.*

Common to all sub-systems.

H9 Menu Screen Select Diagram

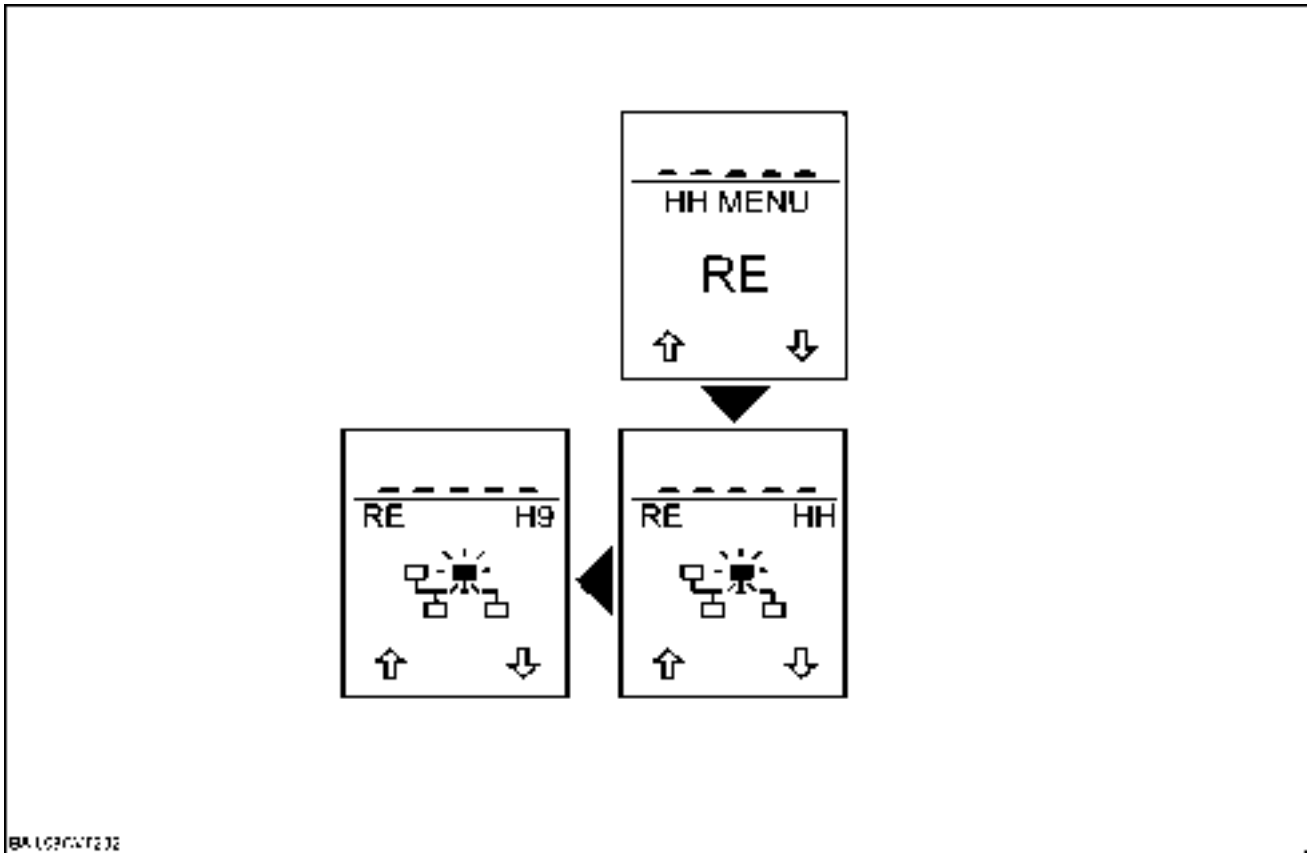

BAIL08CVT232 62

Select the H9 menu by depressing the "menu" key.
The upper section of the display will display "ch _ _"

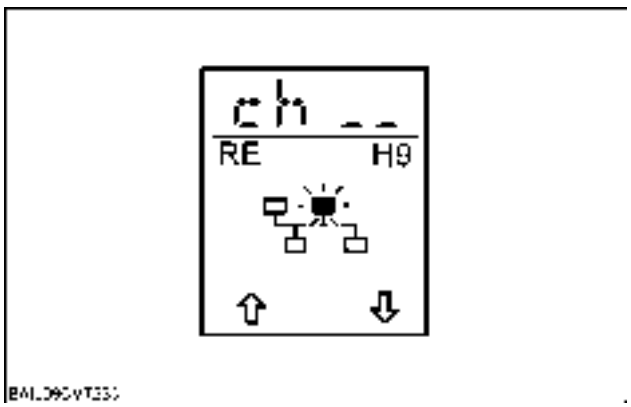

BAIL08CVT233 63

The required channel can be selected by using the navigation "up" and "down" keys.
After a delay the value will be displayed. Compare the value displayed with the typical reading shown in the table below.

NOTE: *The value is the input voltage or signal into the controller. This cannot be directly translated into a voltage due to the internal processes of the controller. A zero equates to* ***0 volts****.*

https://tractormanualz.com/

If the value displayed varies by more than **10 %** to that shown in the table below, a fault is indicated in either the component or the wiring harness relevant to that channel.

NOTE: *Check the connectors of the effected circuit, including the controller connectors, prior to replacing any components.*

Chan-nel	Description	Control module connector and pin	Standard value	Comments
1	Clutch pedal position	CN4-20	75 Not depressed 26 Depressed	
2	Transmission temperature sensor	CN1B-14	**75 %** at **40 °C**. **67 %** at **28 °C**.	
3	Fuse 38 interrogation line	CN2B-11	99	
5	**+5 Volt** voltage supply to the sensors	CN1B-16	48	
6	**+8 Volt** voltage supply to the sensors	CN1B-25	79	
7	**+12 Volt** VF input signal (see explanation)	CN1A-1	42	
8	**+12 Volt** VD input signal (see explanation)	CN1A-8	42	Shuttle lever in Forwards position
9	**+12 Volt** VH input signal (see explanation)	CN1A-20	42	
10	**+12 Volt** VT input signal (see explanation)	CN3B-24	42	
11	Seat switch	CN4-9	69 in seat 36 not in seat	
12	Transmission output speed sensor	CN3B-19	20 (engine not running)	
13	Flywheel speed sensor	CN3B-22	50 (engine not running)	
18	Engine speed	-	850 rev/min - 2350 rev/min	
19	Wheel speed	-	2780 @ 10 kph	
20	Radar speed	-	2780 @ 10 kph	
30	Raise solenoid for the EDC control valve	CN2-4	0 Off - 70 On	
31	Lower solenoid for the EDC control valve	CN2-5	0 Off - 70 On	
32	Lifting arm position potentiometer	CN1B-2	9Lowered 78 Raised	
33	Position control knob	via CAN	0 Lowered 100 Raised	
34	Drop rate potentiometer	via CAN	0 anticlockwise, 100 clockwise	
35	Height limit potentiometer	via CAN	0 anticlockwise, 100 clockwise	
36	Sensitivity potentiometer	via CAN	0 anticlockwise, 100 clockwise	
37	Slip limit potentiometer	via CAN	0 anticlockwise, 100 clockwise	
38	Right hand draft load pin	CN1B-9	46	No mounted implement
39	Left hand draft load pin	CN1B-10	46	No mounted implement
40	Draft load potentiometerl	via CAN	0 anticlockwise, 100 clockwise	
49	Rear PTO solenoid current	CN3B-18	0 Off - 99 On	
50	Neutral switch (shuttle lever)	CN4-16	29 released, 66 depressed	
76	Forward switch (shuttle lever)	CN1B-12	30 Neutral, 68 forward	
77	Reverse switch (shuttle lever)	CN1B-13	30 Neutral, 68 forward	
80	Park lock switch of the shuttle lever	CN3A-11	30 Park lock On 68 Park lock Off	
89	Max engine speed potentiometer	via CAN	0 at idle 100 at max speed	

https://tractormanualz.com/

Chan-nel	Description	Control module connector and pin	Standard value	Comments
90	Hand throttle potentiometer	via CAN	0 at idle 100 at max speed	
91	Accelerator pedal potentiometer	CN1B-1	10 at idle, 85 at max speed	
97	EHR joystick (X)	via CAN	0 at centre, - 100 left/right	
98	EHR joystick (Y)		0 at centre, - 100 left/right	
107	Rear PTO speed selection position sensor	CN4-8	75@1000 33@1000E	
112	Clutch A current	CN2-1	3 Not Engaged - 72 Engaged	
113	Clutch B current	CN2-5	3 Not Engaged - 72 Engaged	
114	F1 synchroniser current	CN2-6	3 Off 72 On	
115	F3 synchroniser current	CN2-3	3 Off 72 On	
116	F2 synchroniser current	CN3B-1	3 Off 72 On	
117	F4 synchroniser current	CN3B-3	3 Off 72 On	
118	R1 synchroniser current	CN2-2	3 Off 72 On	
119	R2 synchroniser current	CN3B-10	3 Off 72 On	
120	Dump solenoid current	CN3B-2	3 Off 72 On	
122	Hydro solenoid current	CN2-7	27 to 68	
123	F1/F3 synchroniser position potentiometer	CN4-14	6 to 24 in F1, 41 to 56 in N, 71 to 94 in F3	
124	F2/R1 synchroniser position potentiometer	CN4-21	6 to 24 in F2, 41 to 56 in N, 71 to 94 in R1	
125	F4/R2 synchroniser position potentiometer	CN3A-2	6 to 24 in R2, 41 to 56 in N, 71 to 94 in F4	
126	Clutch A pressure transducer	CN3A-8	10 in F2, F4, R1 54 in F2, F3, R2	
127	Clutch B pressure transducer	CN3A-9	16 in F1, R3, R2 54 in F2, F4, R1	
133	PTO twist sensor	CN2-14	50 engine not running	
134	Brake pressure sensor	CN3A-17	10 brake released 23 brake applied	

Explanations:
VF Input: This is the input voltage into the controller to transmission components not directly affected by the clutch pedal switch, i.e. forward and reverse synchroniser solenoids, creeper solenoid and four wheel drive solenoid.
VD Input: This is the input voltage into the controller to transmission components which are affected by the clutch pedal switch, i.e. PWM solenoids.
VH Input: This is the input voltage into the controller to electronic draft control components, i.e. raise and lower solenoids.
VT Input: This is the input voltage into the controller to rear PTO and Differential lock, i.e. rear PTO clutch, Rear PTO brake, and differential lock solenoids.

https://tractormanualz.com/

CN1a = **X092**	CN1b = **X093**	CN2 = **X091**
CN3a = **X094**	CN3b = **X095**	CN4 = **X097**

https://tractormanualz.com/

HA - DEMONSTRATION MENU

Used to demonstrate engine power boost.

HA Menu Screen Select Diagram

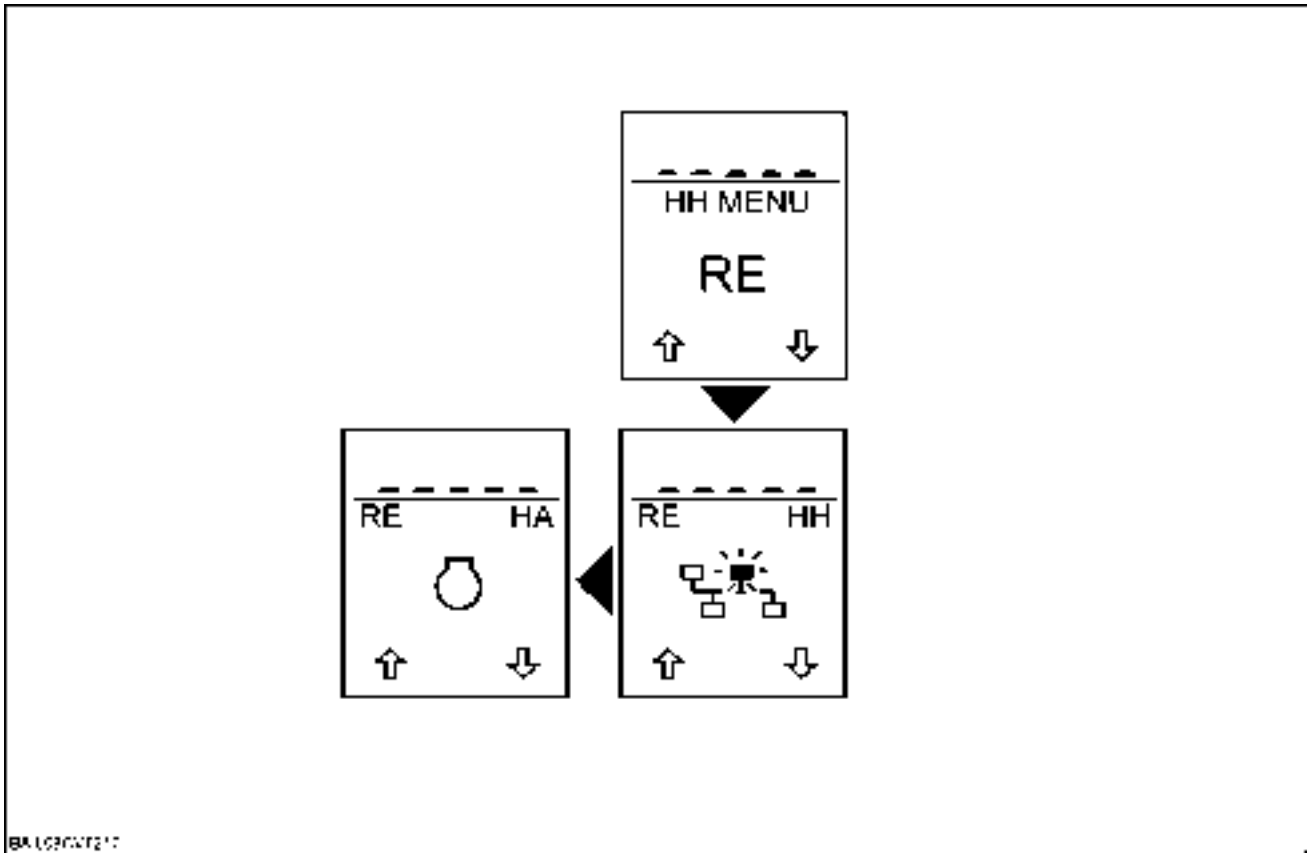

BAIL08CVT210 64

Select the HA sub-system by depressing the "menu" key.
The upper section of the display will display "ch _ _"

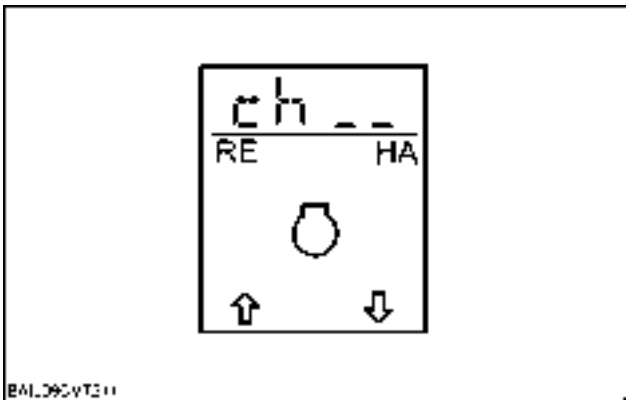

BAIL08CVT211 65

The required channel can be selected by using the navigation “up" and “down" keys (see the table below for the description of each channel).

Channel	Description
Ch 1	Engine power boost demonstration

https://tractormanualz.com/

Channel 1 - Engine Power Boost Demonstration

Power boost will only be active under the following conditions:

- No PTO torque sensor or calibration fault codes
- PTO is fully engaged
- Wheel speed is greater than **0.5 Km/h**.
- Engine speed is greater than **1300 rev/min**.
- Coolant temperature is below **105 °C**.
- PTO has at least **250 Nm** torque applied

The upper section of the display will display “Pbd" (Power boost demonstration).
Start the engine and operate the vehicle to activate engine power boost. The power boost lamp on the ICU3 will be illuminated when power boost is enabled.
Engine power boost will work as normal, but using the CRPM adjustment switch will turn the powerboost on and off.
CRPM increase switch **(1)** to turn power boost ON
CRPM decrease switch **(2)** to turn power boost OFF

NOTE: *Power boost demonstration will be disabled after turning the keystart OFF.*

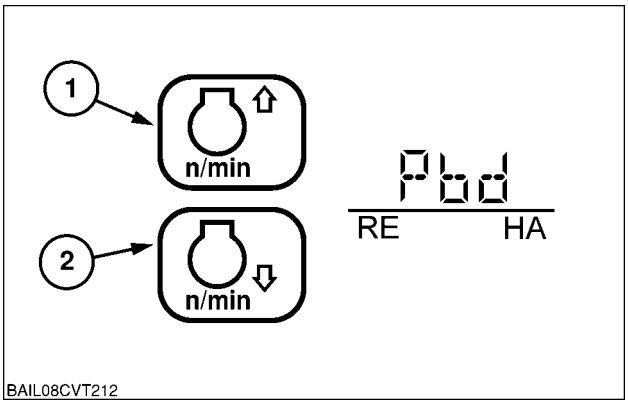

BAIL08CVT212 66

https://tractormanualz.com/

HB - DISPLAY STORED FAULT CODES

This menu is used to display fault codes which are stored in the EEPROM of the controller.
A maximum of ten fault codes for each sub-system can be stored.
Common to all sub-systems.

HB Menu Screen Select Diagram

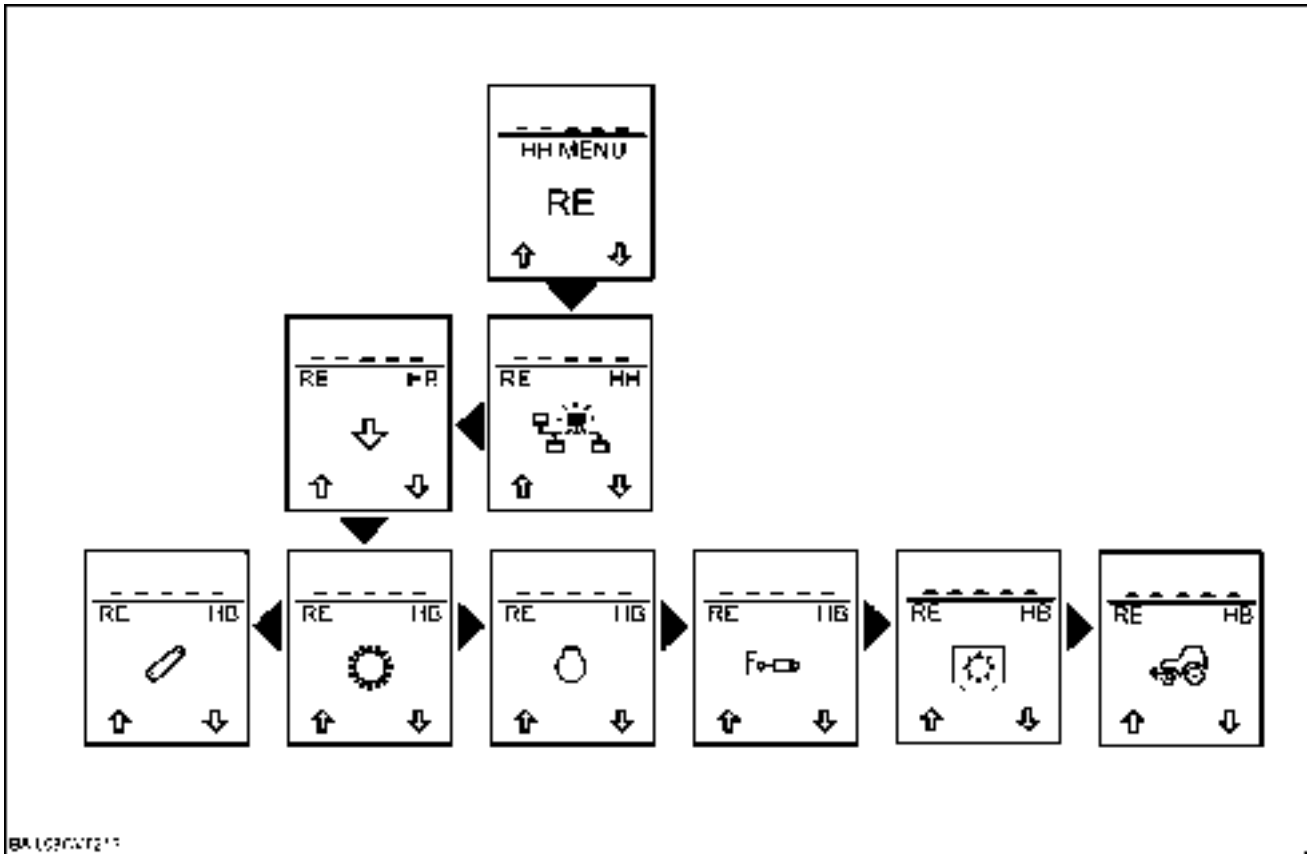

BAIL08CVT213 67

Select the required sub-system by depressing the "menu" key, as the example shown.

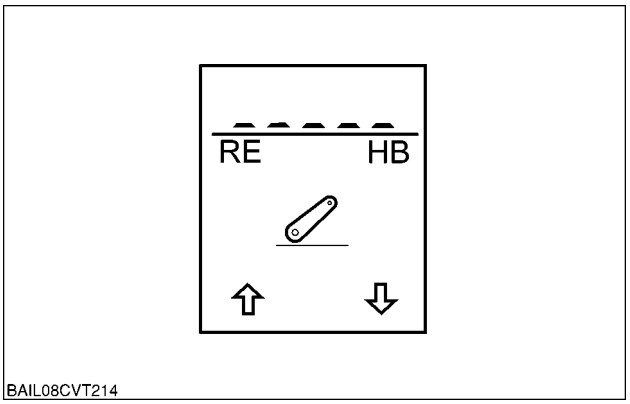

BAIL08CVT214 68

The upper section of the display will display "- - - -", if no fault code is stored in the selected sub-system.

https://tractormanualz.com/

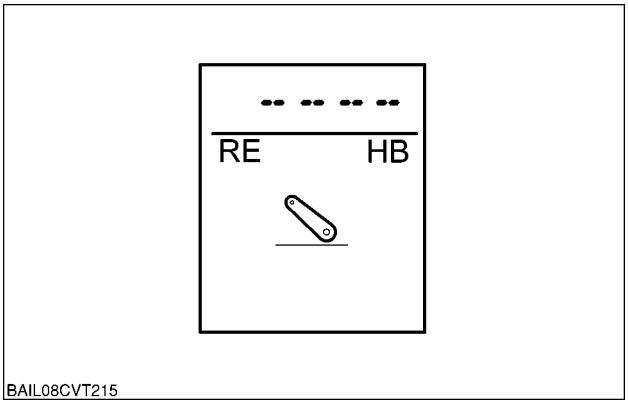

BAIL08CVT215 69

The upper section of the display will display "F", if a fault code is stored in the selected sub-system.
The fault code would then automatically cycle through as the example:
1024 Fault code
0 Hour of first occurrence
49 Hour of last occurrence
54 Number of occurrences of the fault
Depress the navigation “up" or “down" key to change to the next fault code in the list.
The upper section of the display will display “- - -" at the end of the list.
Depress the “menu" key to continue navigating through the “HH" menus.

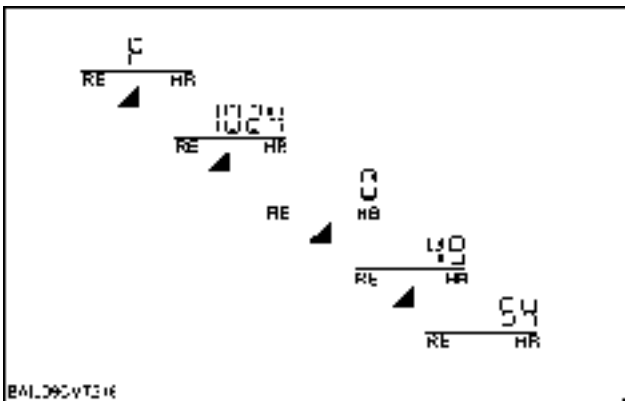

BAIL08CVT216 70

https://tractormanualz.com/

HC - CLEAR STORED FAULT CODES

HC Menu Screen Select Diagram

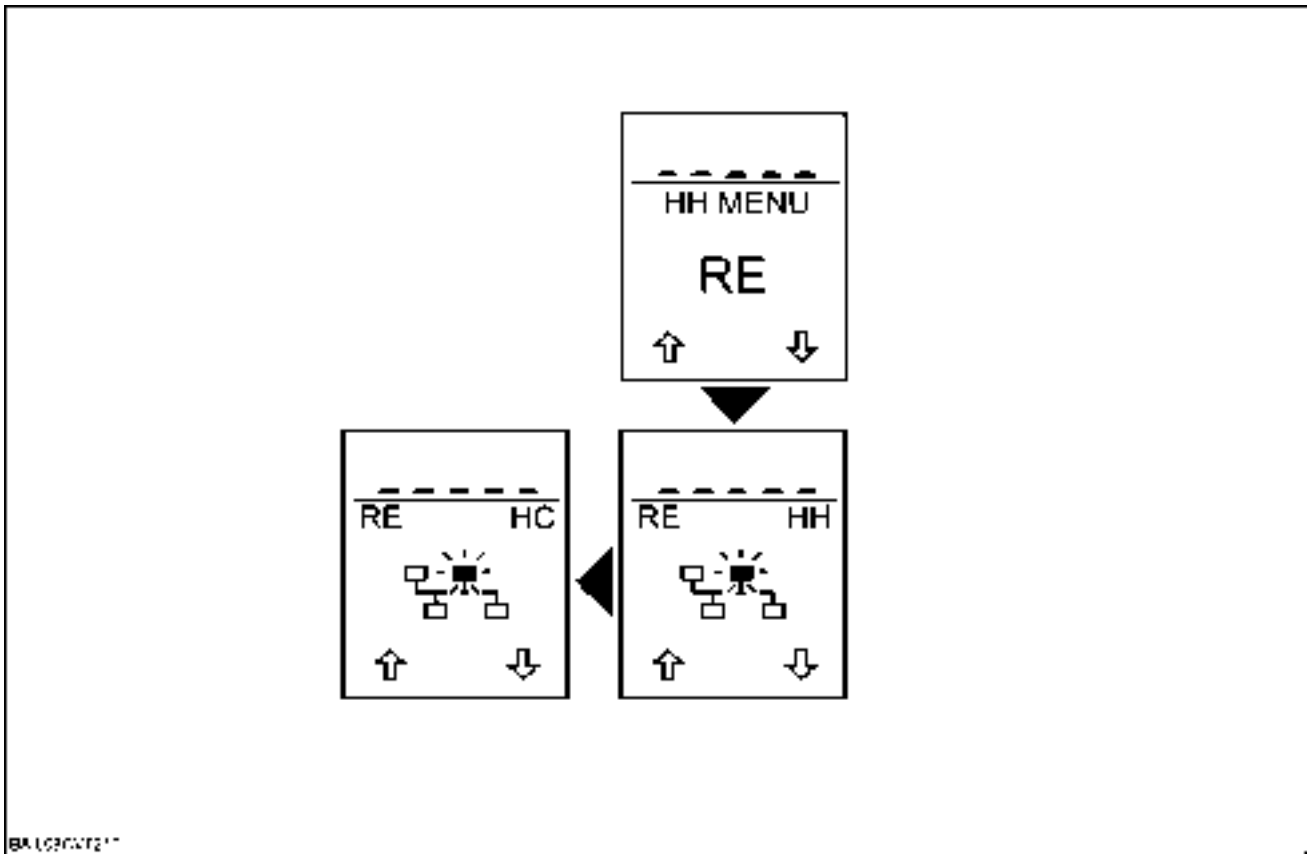

BAIL08CVT217 71

NOTE: *Always make a note of the fault codes stored, before clearing.*

Select the HC menu by depressing the “menu" key.

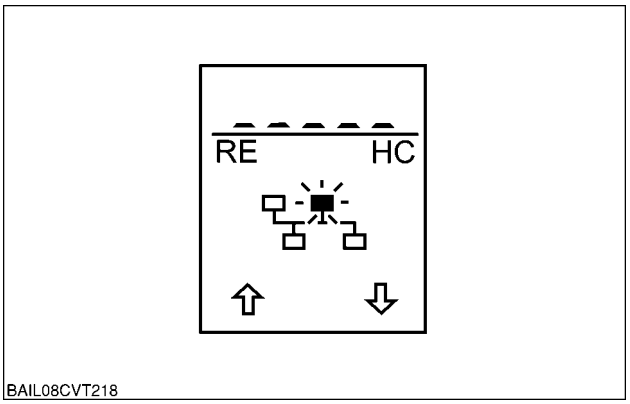

BAIL08CVT218 72

https://tractormanualz.com/

The upper section of the display will display “F CL".

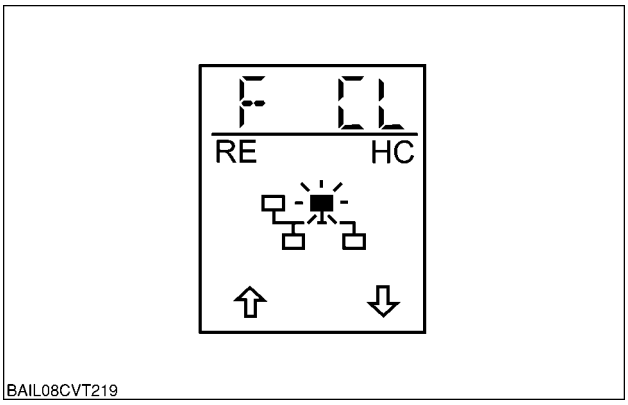

BAIL08CVT219 73

NOTE: *If the navigation “down" key is released before the countdown finishes, the procedure will be aborted.*

Depress and hold the navigation “down" key to confirm the resetting of the EEPROM.
The upper section of the display will countdown from 05 to 01, then “EE" will be displayed to indicate the EEPROM has been cleared.

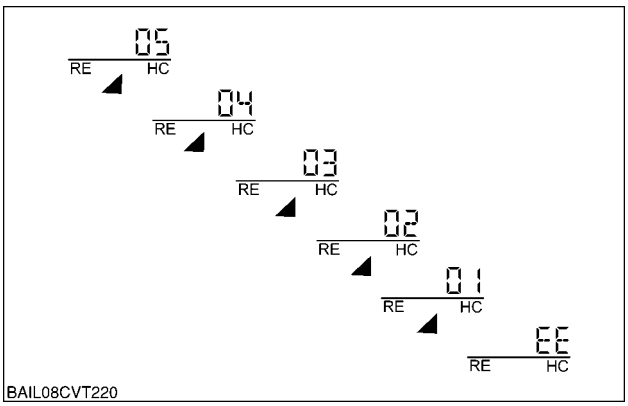

BAIL08CVT220 74

Depress the “menu" key to continue navigating through the “HH" menus.

https://tractormanualz.com/

HE - DISPLAY ALL SPEED INPUTS

This menu is used to verify the operation of various frequency inputs.

NOTE: *The vehicle may be driven while in this menu.*

Common to all sub-systems.
HE Menu Screen Select Diagram

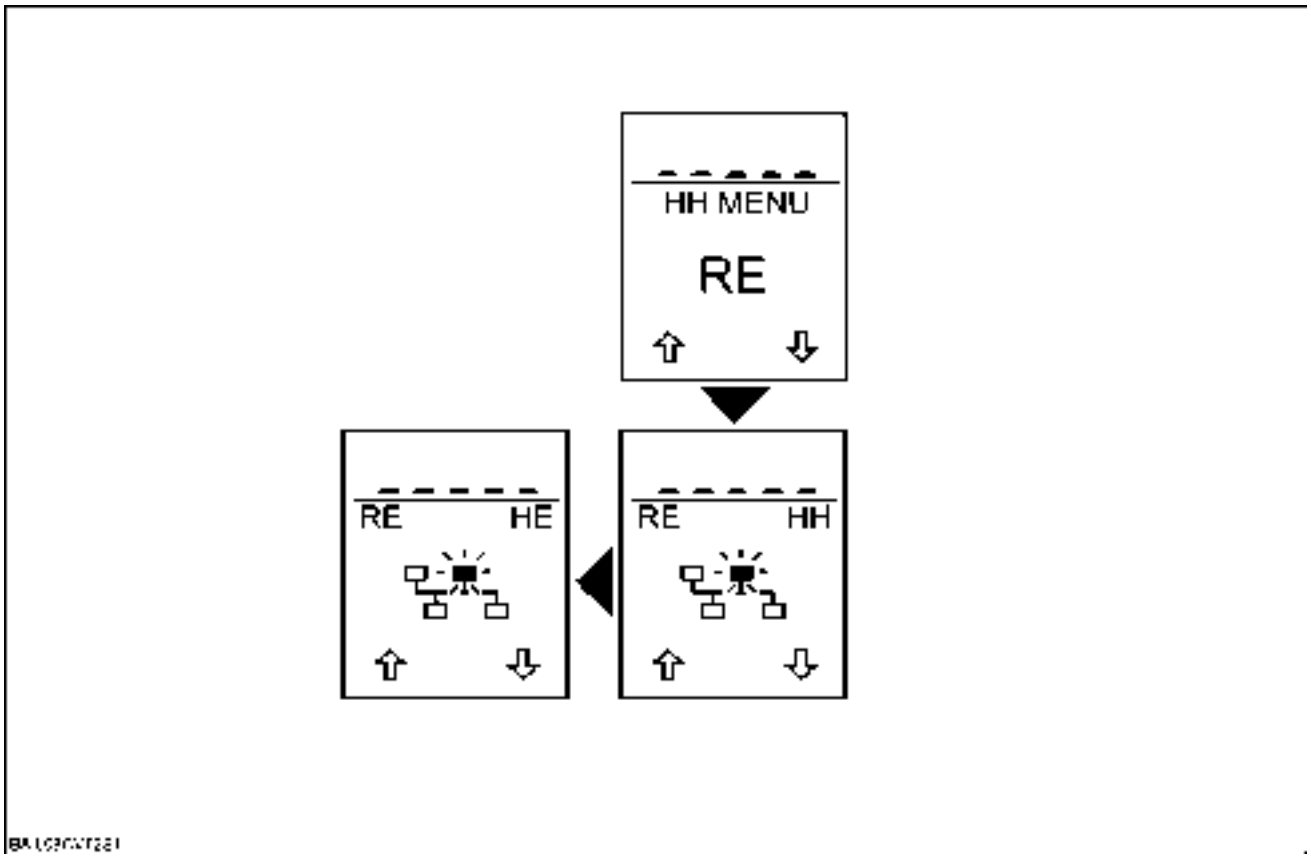

BAIL08CVT221 75

Select the HE menu by depressing the "menu" key.

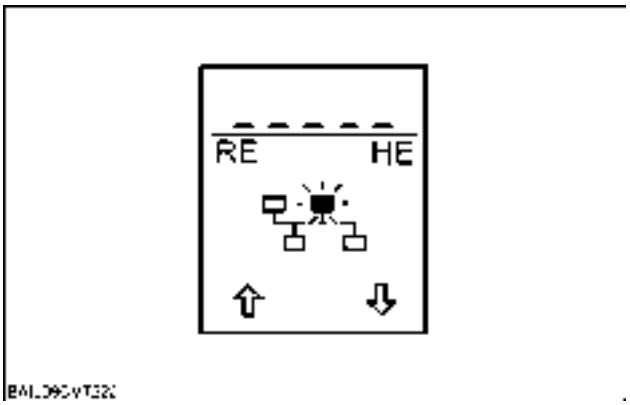

BAIL08CVT222 76

https://tractormanualz.com/

The upper section of the display will display "ch _"
The required channel can be selected by using the navigation “up" and “down" keys (see the table below for the description of each channel).

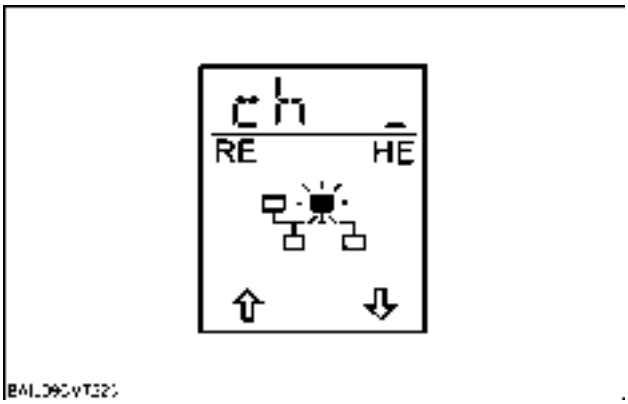

BAIL08CVT223 77

Channel	Description	Typical Reading	Notes
1	Hydro in sensor frequency	0 to 4000	
2	Radar	**3700 @ 10 km/h**.	
3	Not used	-	
4	Rear PTO speed	2000 @ 1000 erpm	
5	Wheel speed sensor frequency	**8000 @ 10 km/h**.	
6	Ring speed speed sensor frequency (CVT transmission)	15000 @ powered zero	
7	PTO twist angle (relative to damper)	4500 to 13500 (degrees x 100)	
8	Engine flywheel speed	560@850erpm	
9	PTO Shaft twist (relative to reference)	**15 - 140 °**	

After a delay the value will be displayed.
Depress the “menu" key to continue navigating through the “HH" menus.

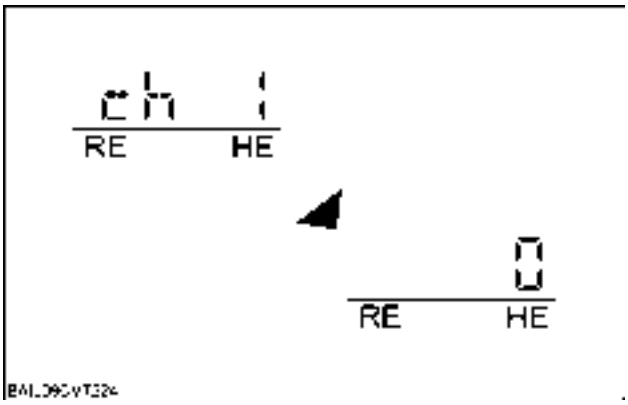

BAIL08CVT224 78

https://tractormanualz.com/

HF - VIEW CONTROLLER HARDWARE INFORMATION

This menu allows the hardware identification, hardware version and serial number to be displayed. Common to all sub-systems.

HF Menu Screen Select Diagram

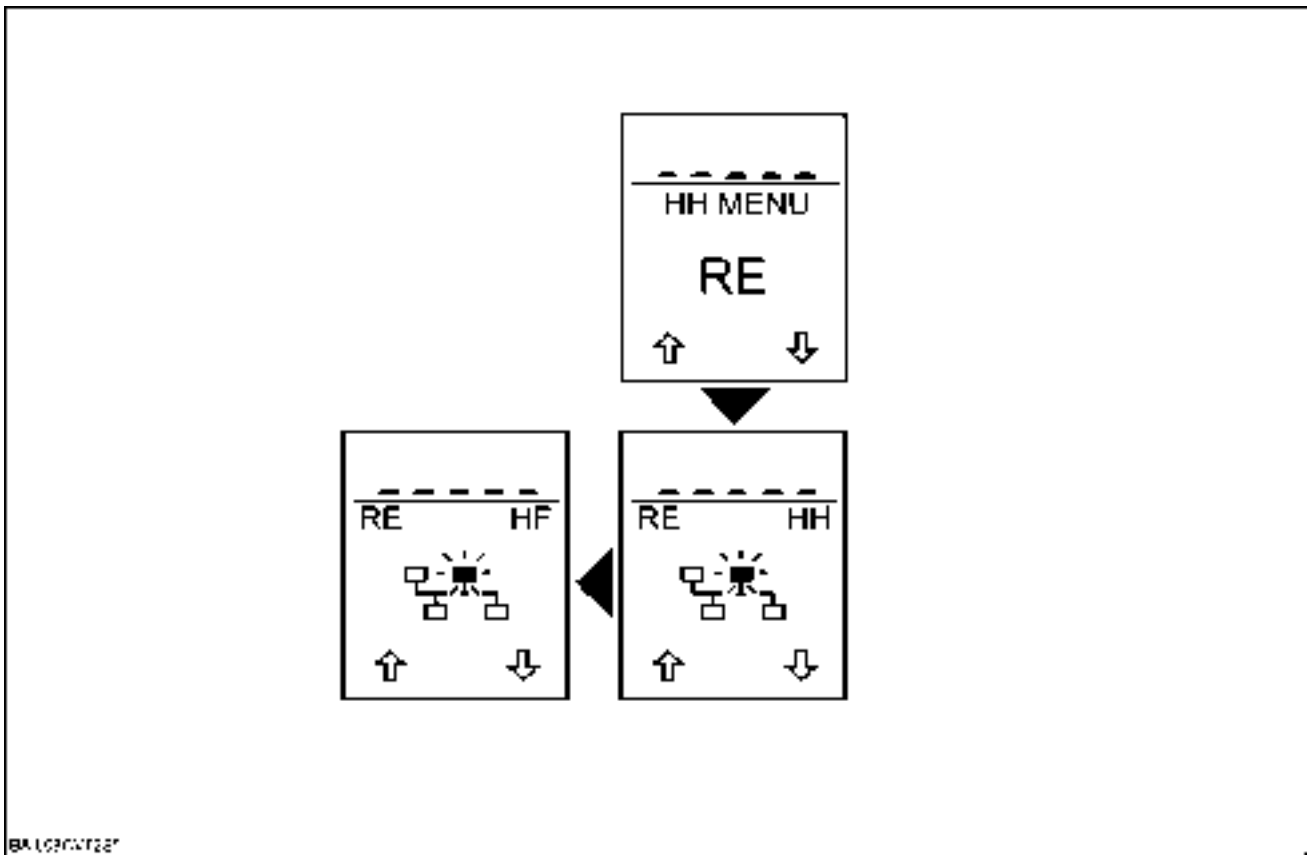

BAIL08CVT225 79

Select the HF menu by depressing the "menu" key.

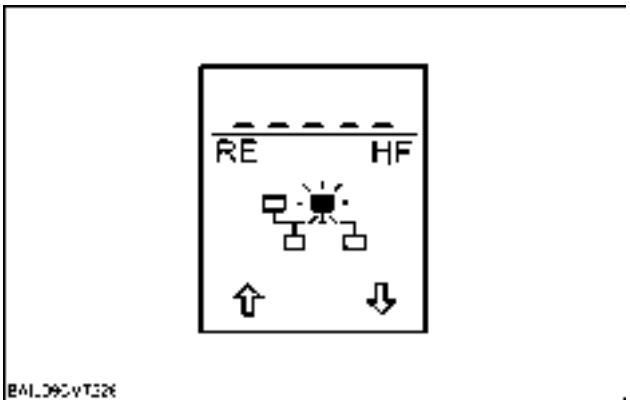

BAIL08CVT226 80

https://tractormanualz.com/

The upper section of the display will automatically cycle through as the example:
598 Module identification
0400 Hardware version
0000 Hardware version
0000 Serial number
2001 Serial number
3274 Serial number
and return to allow navigation of the “HH" menus.

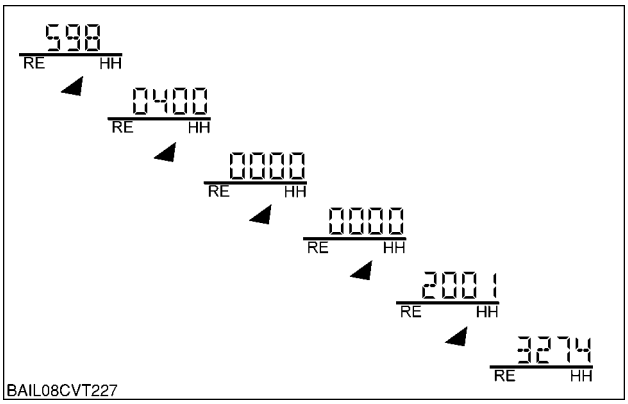

BAIL08CVT227 81

https://tractormanualz.com/

HJ - ELECTRONIC HYDRAULIC REMOTE CONTROL VALVE SET-UP

This menu allows the front Electronic Hydraulic Remote (EHR) control valve numbers to be reset.
The EHR valve stores a number to indicate its position in the remote control valve stack, i.e. valve number 1,2, 3, 4 or 5. If a valve assembly has been replaced it will be necessary to reprogram the number of each valve within the complete assembly. New valves are supplied without an assigned number.

NOTE: *The renumbering procedure for all of the valves, either rear or mid mount valves, must be completed before commencing the procedure for the other set of valves.*

HJ Menu Screen Select Diagram

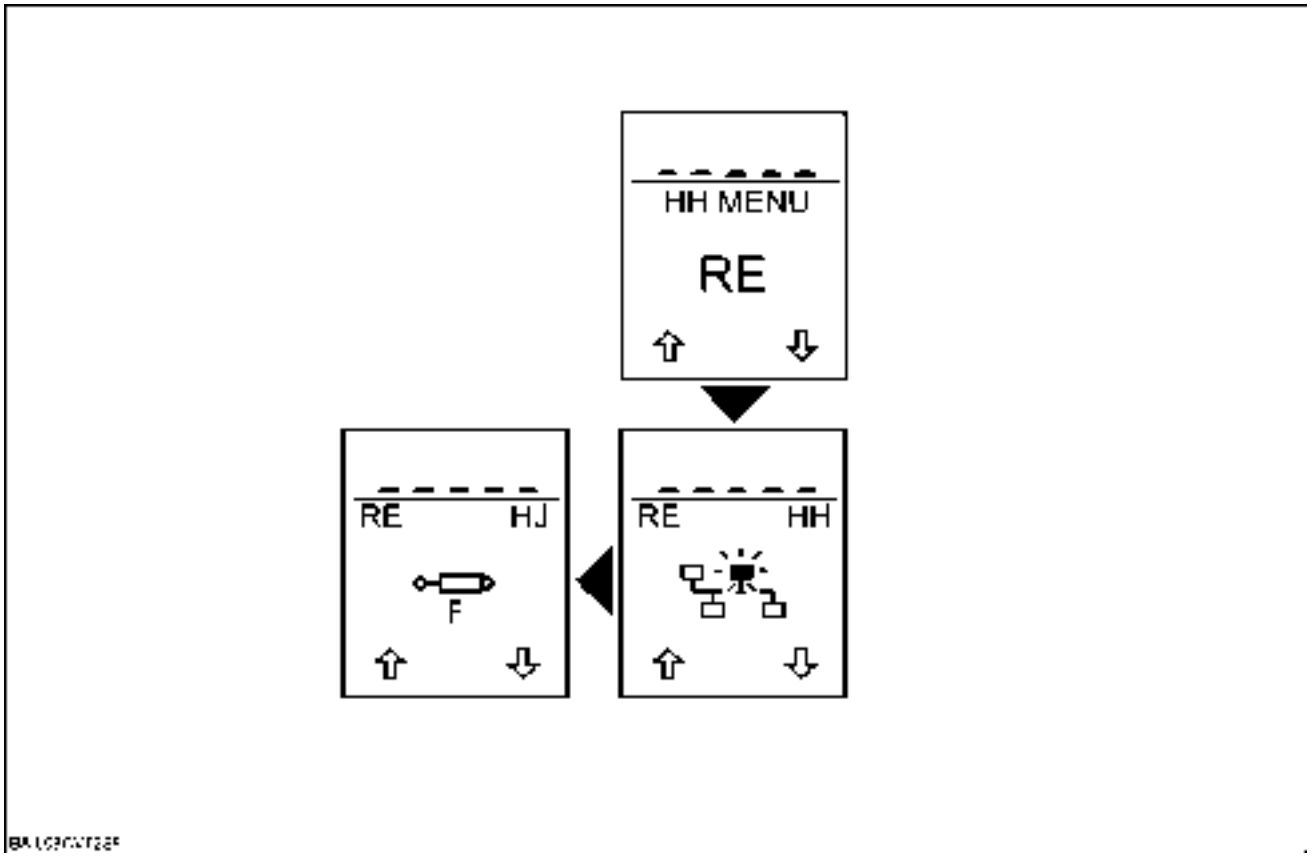

BAIL08CVT228 82

With all of the rear remotes connected, navigate the H-menus and select the HJ menu by depressing the "menu" key.

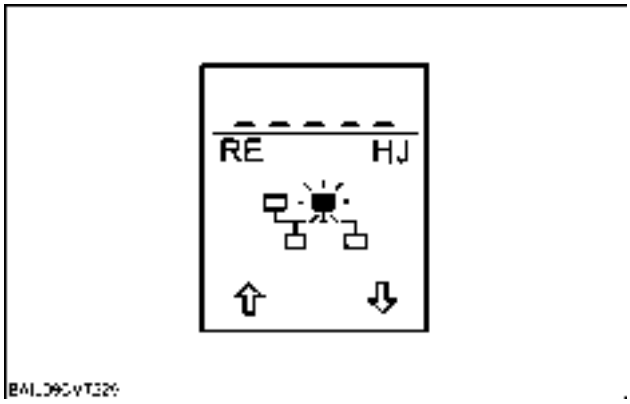

BAIL08CVT229 83

The upper section of the display will display "EEhr".

https://tractormanualz.com/

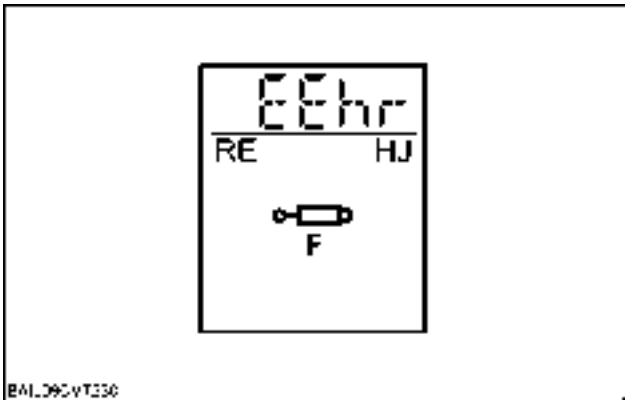

BAIL08CVT230 84

NOTE: *HJ will clear all the EHR valve numbers.*

Depress and hold the down button, the display will change to show ’5’ and countdown to ’1’ then change to ’Cehr’, this signifies that the valve numbers have been cleared.

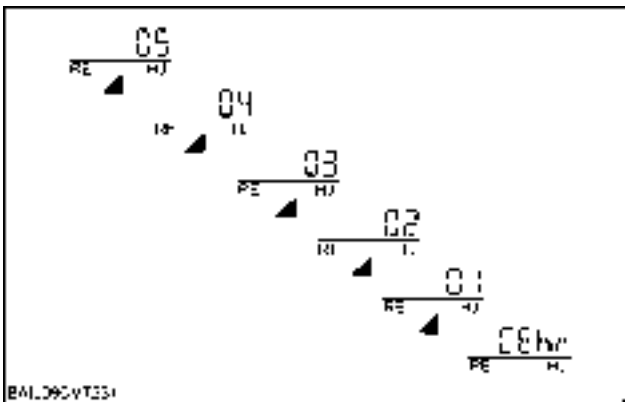

BAIL08CVT231 85

NOTE: *If the navigation "down" key is released before the countdown finishes, the procedure will be aborted.*

Disconnect the connectors from each of the remote valves, except for valve number 1.

Turn the keystart ON and enter HJ menu again. The cluster display will momentarily flash ’Ehr_’ followed by ’Ehr1’, an audible beep will be heard, indicating that number 1 valve has been recognised and renumbered. The display will then change to flash ’Ehr2’ to signify that the controller is ready for the next valve to be connected..

Connect each remote valve in the correct order. As each valve is connected an audible beep will signify the valve is recognised.

As each valve is connected the display will change to show the next valve number to be connected until ’Ehr_5’ is displayed.

If there are less than 5 rear remotes then the procedure can be exited by depressing and holding the navigation ’down’ key , the display will change to ’End’ to indicate programming is complete. If the maximum number of valves are fitted then the procedure will end automatically and display ’End’.

Turn the keystart OFF to store the new valve numbers.

Calibrate the remote valves. Refer to **PRIMARY HYDRAULIC POWER SYSTEM Electro-hydraulic remote valve - Calibrate (A.10.C)**.

Control module - Configure KA - Steering Control

HH	Service Menu	Figure Number
H1	Calibration procedures	**1**
H2	View stored calibration values	**2**

https://tractormanualz.com/

HH	Service Menu	Figure Number
H3	Not Used	
H4	View software revision level	**5**
H5	Switch operation test	**8**
H6	Not used	-
H7	Not used	-
H8	Clear Electrically Erasable Programmable Read Only Memory (EEPROM)	**12**
H9	Voltmeter	**15**
HA	Not used	
HB	Display stored fault codes	**18**
HC	Clear all stored fault codes	**22**
HD	Not used	-
HE	Display frequency inputs	**26**
HF	View controller hardware information	**29**

https://tractormanualz.com/

H1 - CALIBRATION PROCEDURES

This menu is used to calibration the steering controller. Refer to **Fast steer system - Calibrate (D.20.C)**.

H1 Menu Screen Select Diagram

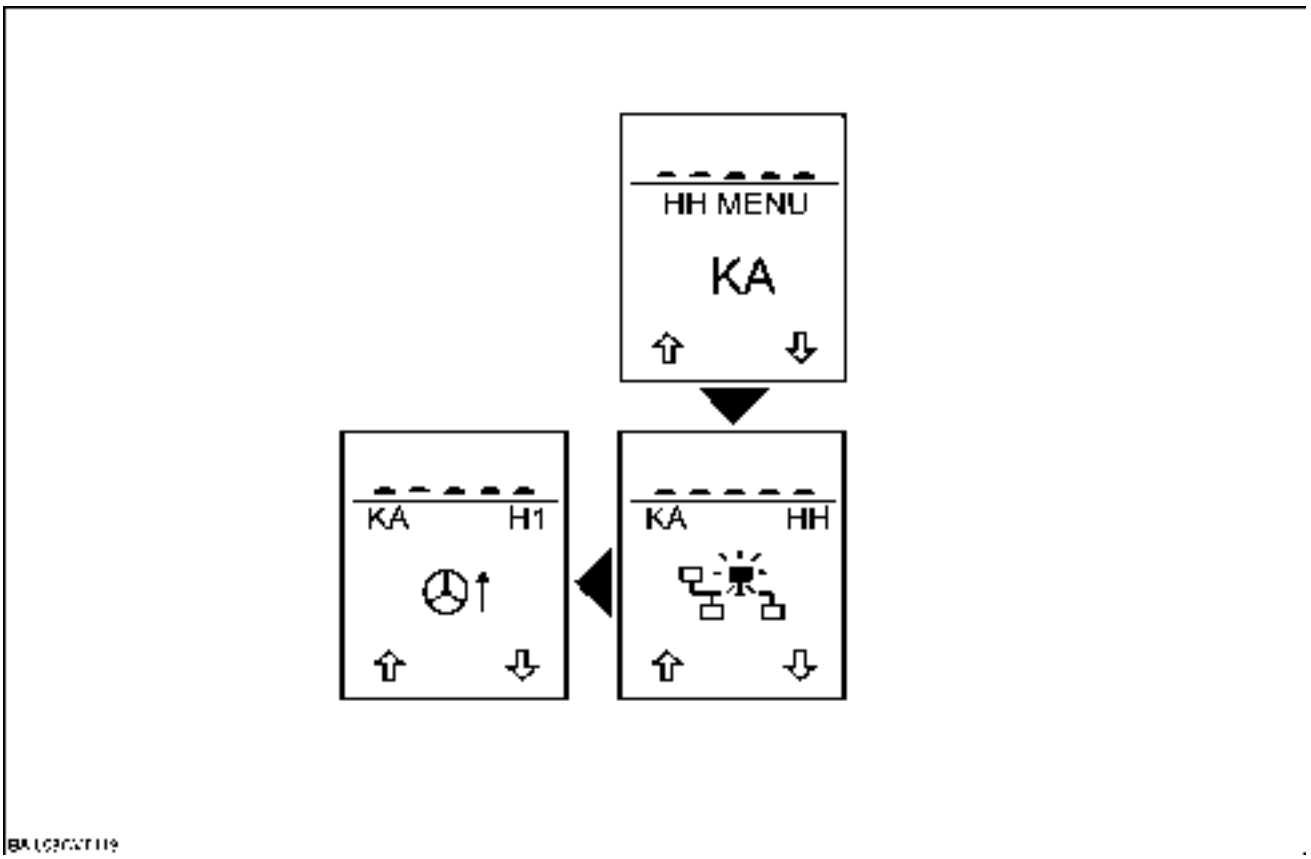

BAIL08CVT119 1

https://tractormanualz.com/

H2 - VIEW STORED CALIBRATION VALUES

This menu is used to display the calibration values stored in the steering controller.

H2 Menu Screen Select Diagram

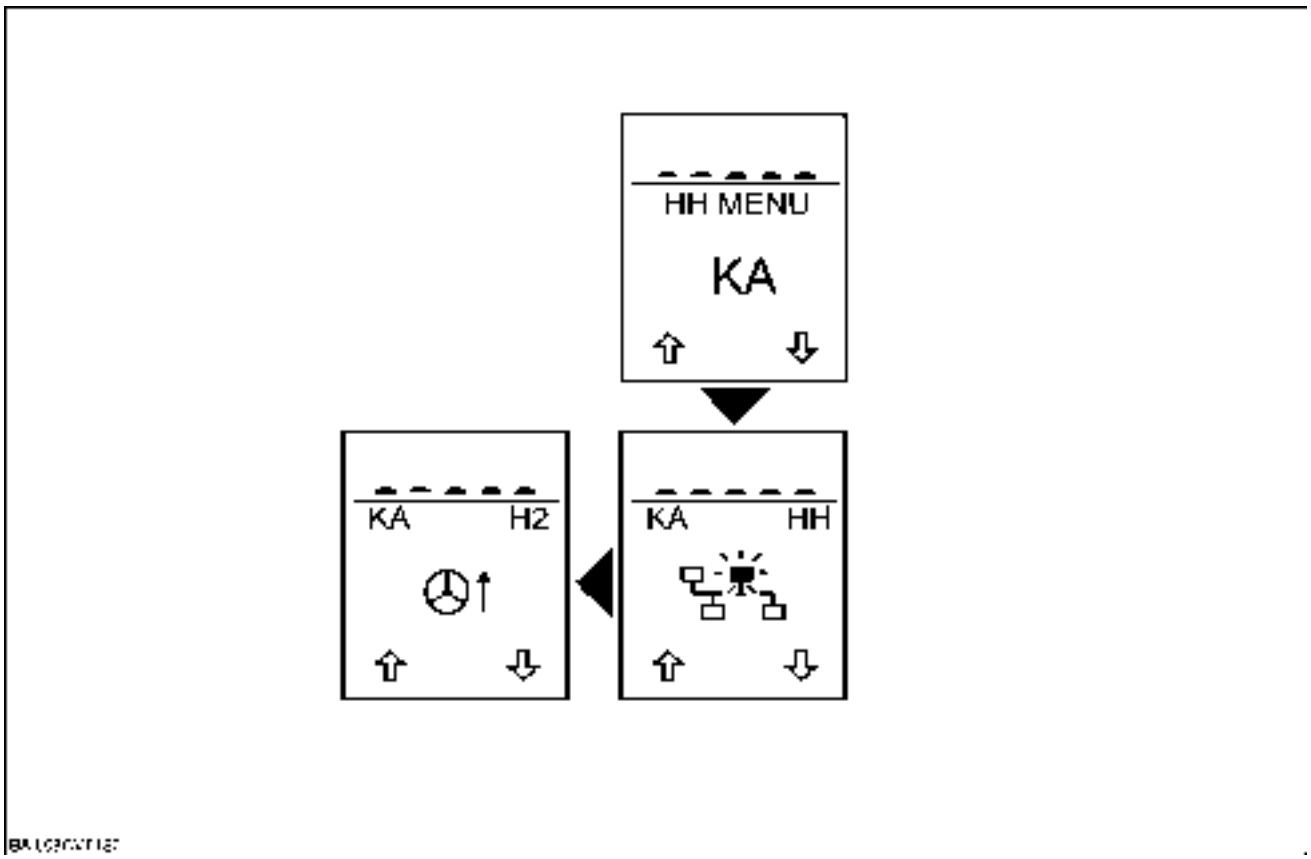

BAIL08CVT120 2

Select the steering sub-system by depressing the “menu" key.

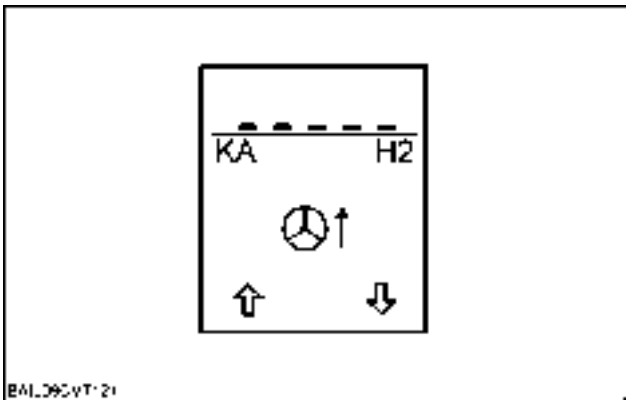

BAIL08CVT121 3

https://tractormanualz.com/

The display will show“ch _".

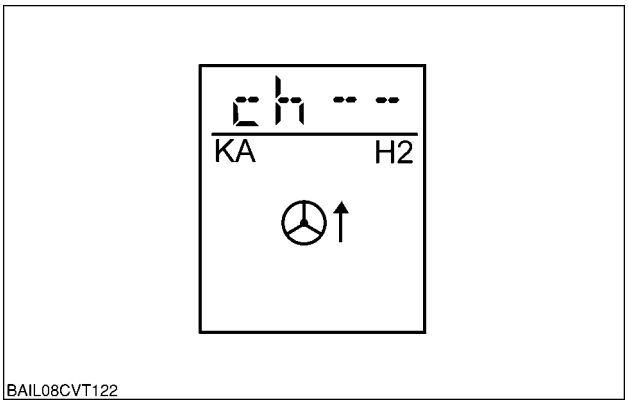

BAIL08CVT122 4

The required channel can be selected by using the “up" and “down" keys.
After a delay the calibration value will be displayed. (see the table below for the description of the channel).
Depress the “menu" key to continue navigating through the “HH" menus.

Channel	Description	Default	Value Range
Ch 1	Proximity switch open	350	0 to 999
Ch 2	Proximity switch closed	295	0 to 999
Ch 3	LVDT secondary signal 1 open	400	400 to 750
Ch 4	LVDT secondary signal 2 open	500	400 to 750
Ch 5	LVDT secondary signal 1 closed	500	400 to 750
Ch 6	LVDT secondary signal 2 closed	400	400 to 750

https://tractormanualz.com/

H4 - VIEW SOFTWARE REVISION LEVEL

Common to all sub-systems.

H4 Menu Screen Select Diagram

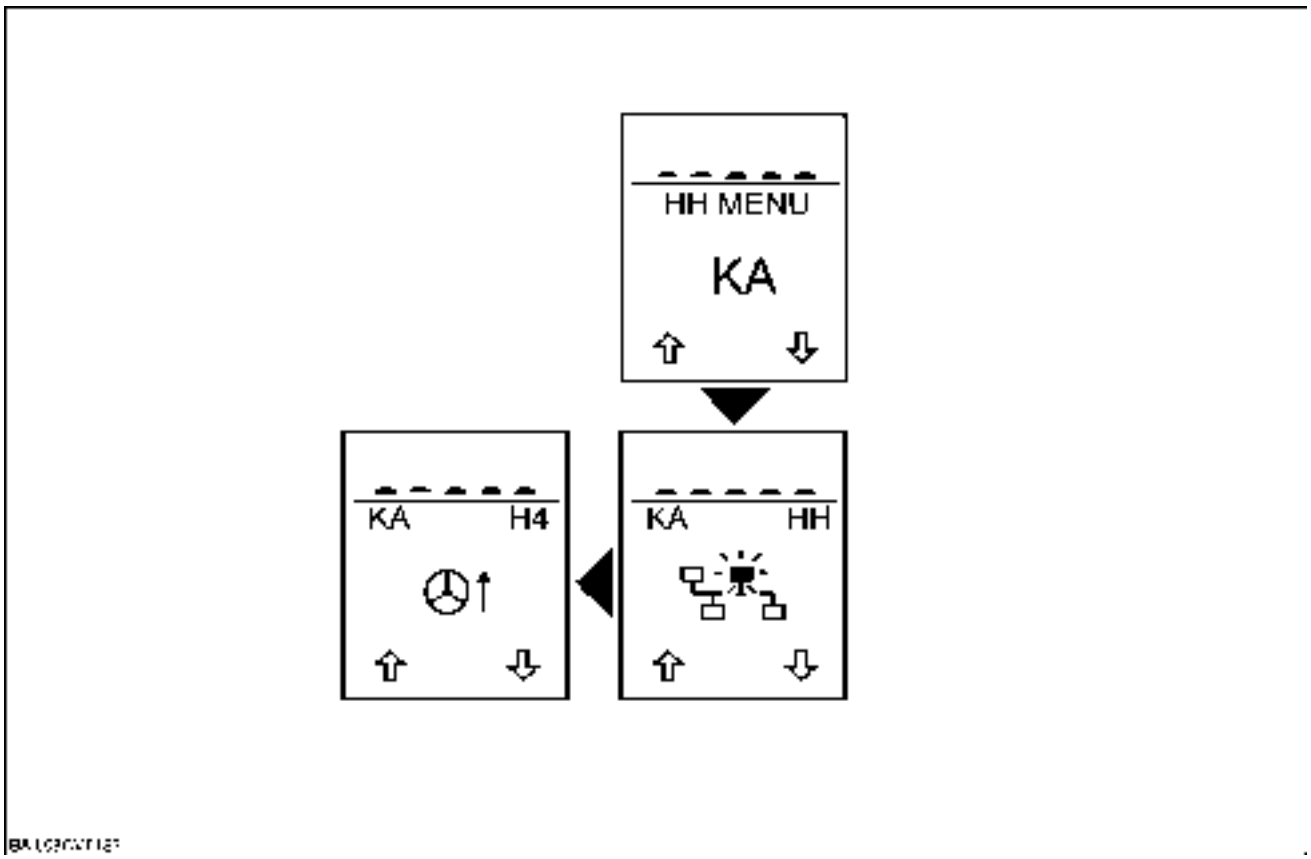

BAIL08CVT123 5

Select the H4 menu by depressing the "menu" key.

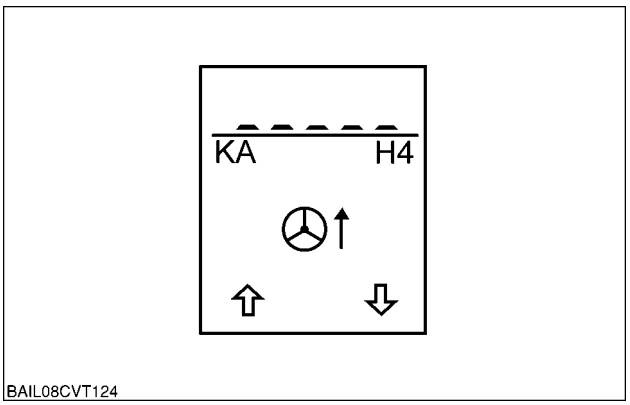

BAIL08CVT124 6

https://tractormanualz.com/

The display will automatically cycle through the software release, as the example shown and return to allow navigation of the "HH" menus.

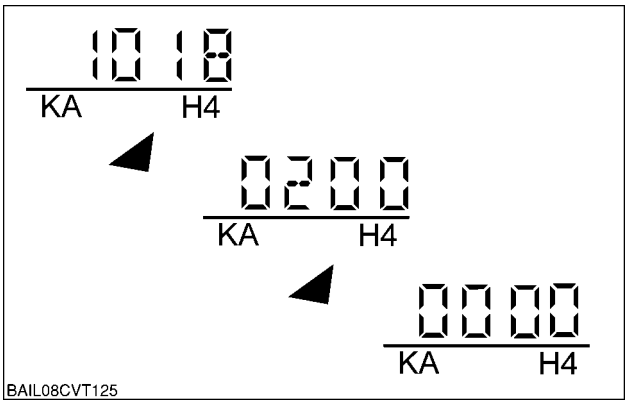

BAIL08CVT125 7

https://tractormanualz.com/

H5 - SWITCH OPERATION TEST

This menu displays a designated code when a switch transition is detected.
Common to all sub-systems.

H5 Menu Screen Select Diagram

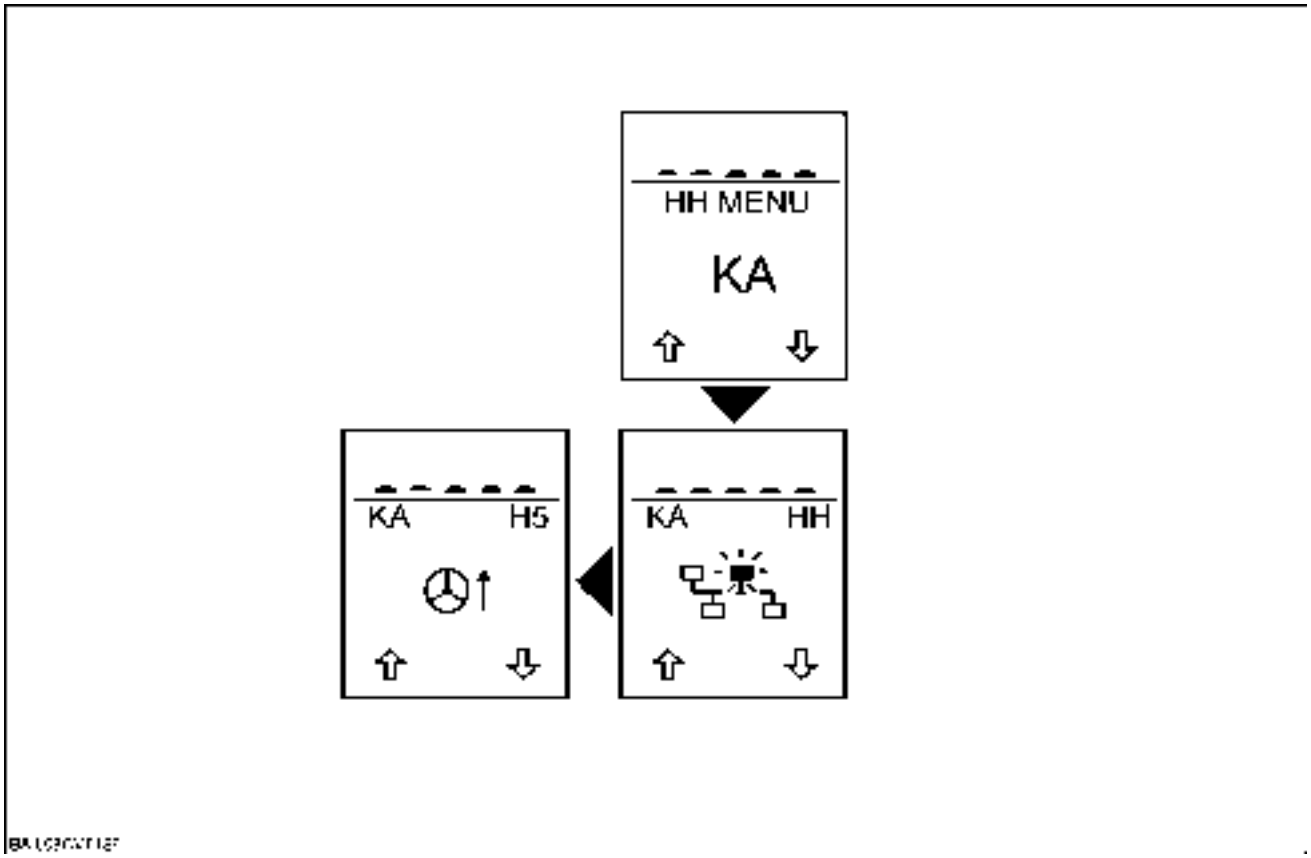

BAIL08CVT126 8

Select the H5 menu by depressing the "menu" key.

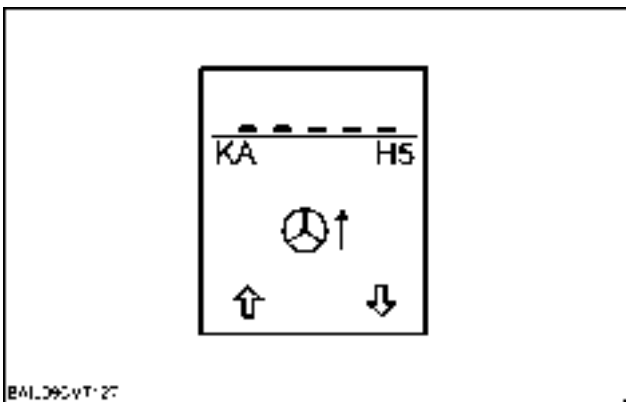

BAIL08CVT127 9

https://tractormanualz.com/

The display will show "d _ _"

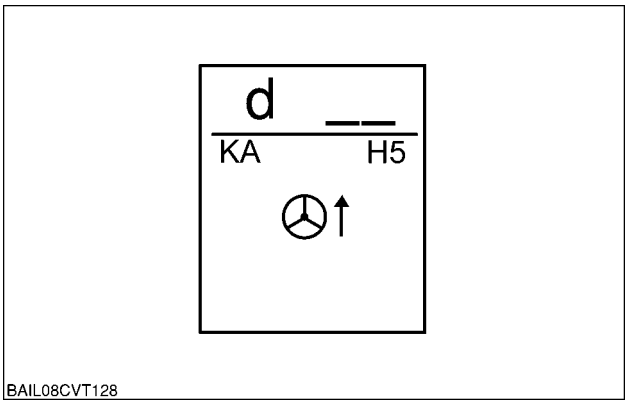

BAIL08CVT128 10

When a switch is operated, a code will be displayed and an audible tone should be heard to indicate the correct function.
If a switch code is not displayed and the audible tone not heard, a 'wiggle' test can be performed on the related wiring, while watching the display or listening for the audible tone, to help locate the fault.

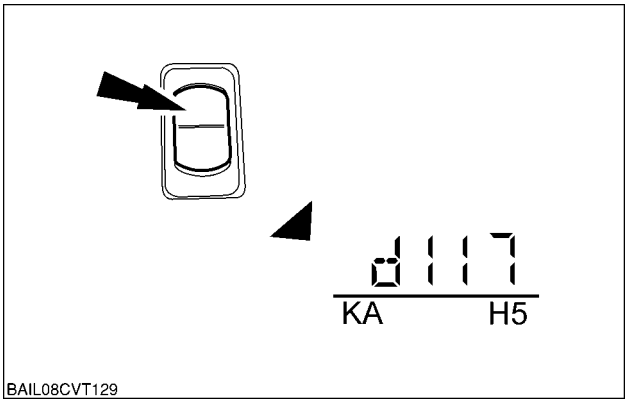

BAIL08CVT129 11

Identifier	Controller Connector	Switch / Input	Special Requirements
d117	A1	Enable switch	-
d118	C4	Safety switch	-
d119	B4	Proximity switch	-
d120	-	LVDT	-

https://tractormanualz.com/

H8 - CLEAR ELECTRICAL ERASABLE PROGRAMMABLE READ ONLY MEMORY (EEPROM)

This menu clears calibration values and stored error codes by resetting all EEPROM values back to default. EEPROM is where all calibration values and error codes are stored. This memory is retained even if there is no power to the controller, i.e. if the battery is disconnected.

H8 Menu Screen Select Diagram

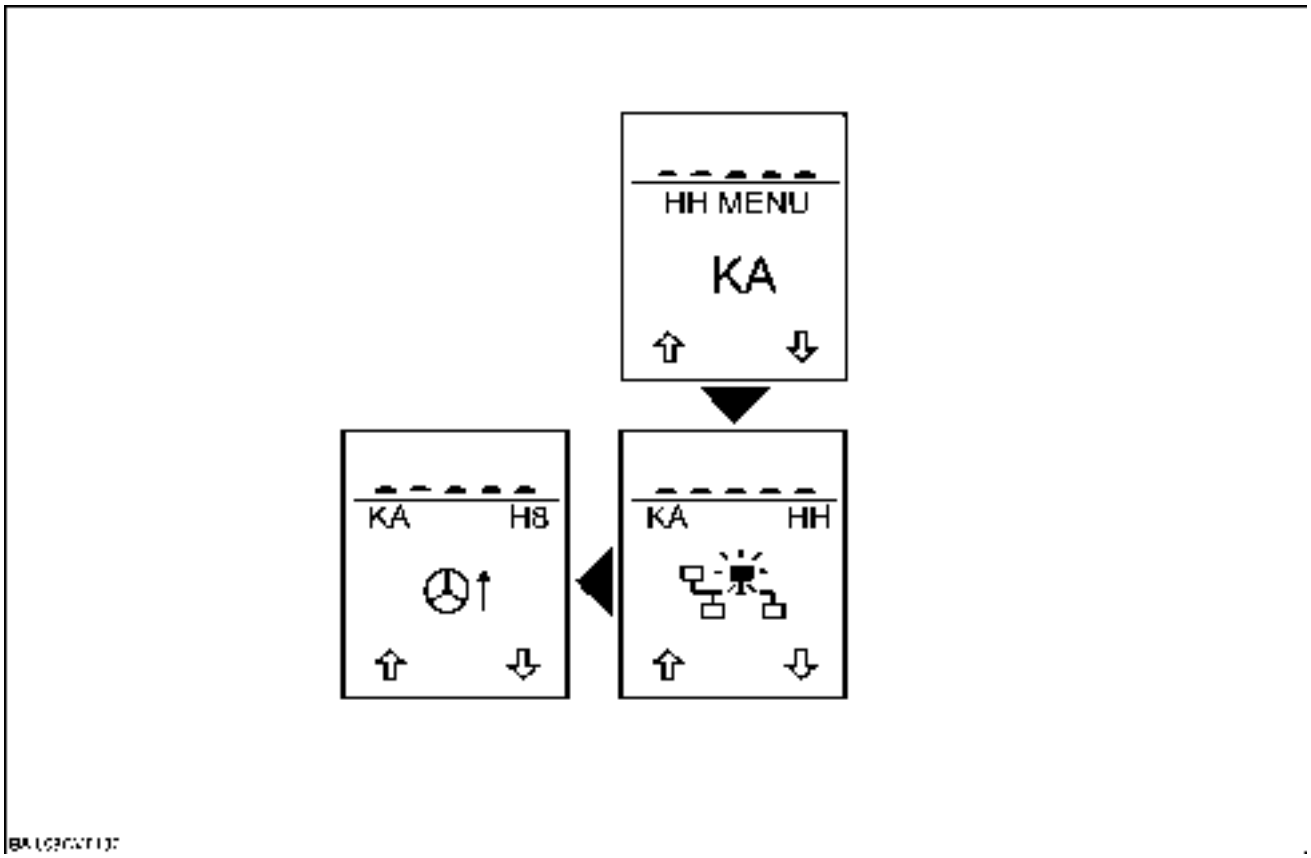

BAIL08CVT130 12

⚠ CAUTION ⚠

H8 will clear all calibrations values and stored error codes.

B006

NOTE: *If the navigation “down" key is released before the countdown finishes, the procedure will be aborted.*

Select the H8 menu by depressing the "menu" key.

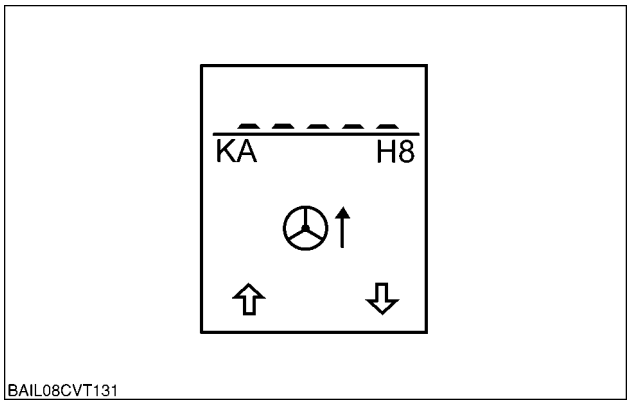

BAIL08CVT131 13

https://tractormanualz.com/

Depress and hold the “down" key to confirm the resetting of the EEPROM.
The display will countdown from 05 to 01, then “EE" will be displayed to indicate the EEPROM has been cleared.
Turn the keystart OFF.

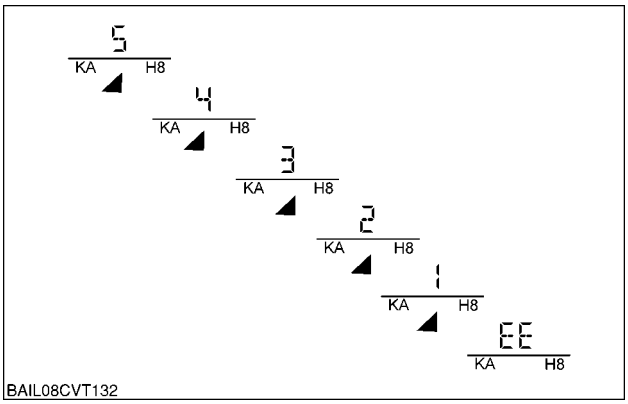

BAIL08CVT132 14

https://tractormanualz.com/

H9 - VOLTMETER

This menu is used to verify the operation of various potentiometers, voltage supplies, and solenoid current circuits. If an intermittent fault is detected within a circuit, a 'wiggle' test can be performed on the related wiring while watching the display for sudden changes in values, to help locate the area where the fault exists.

NOTE: *The vehicle may be driven while in this menu.*

Common to all sub-systems.

H9 Menu Screen Select Diagram

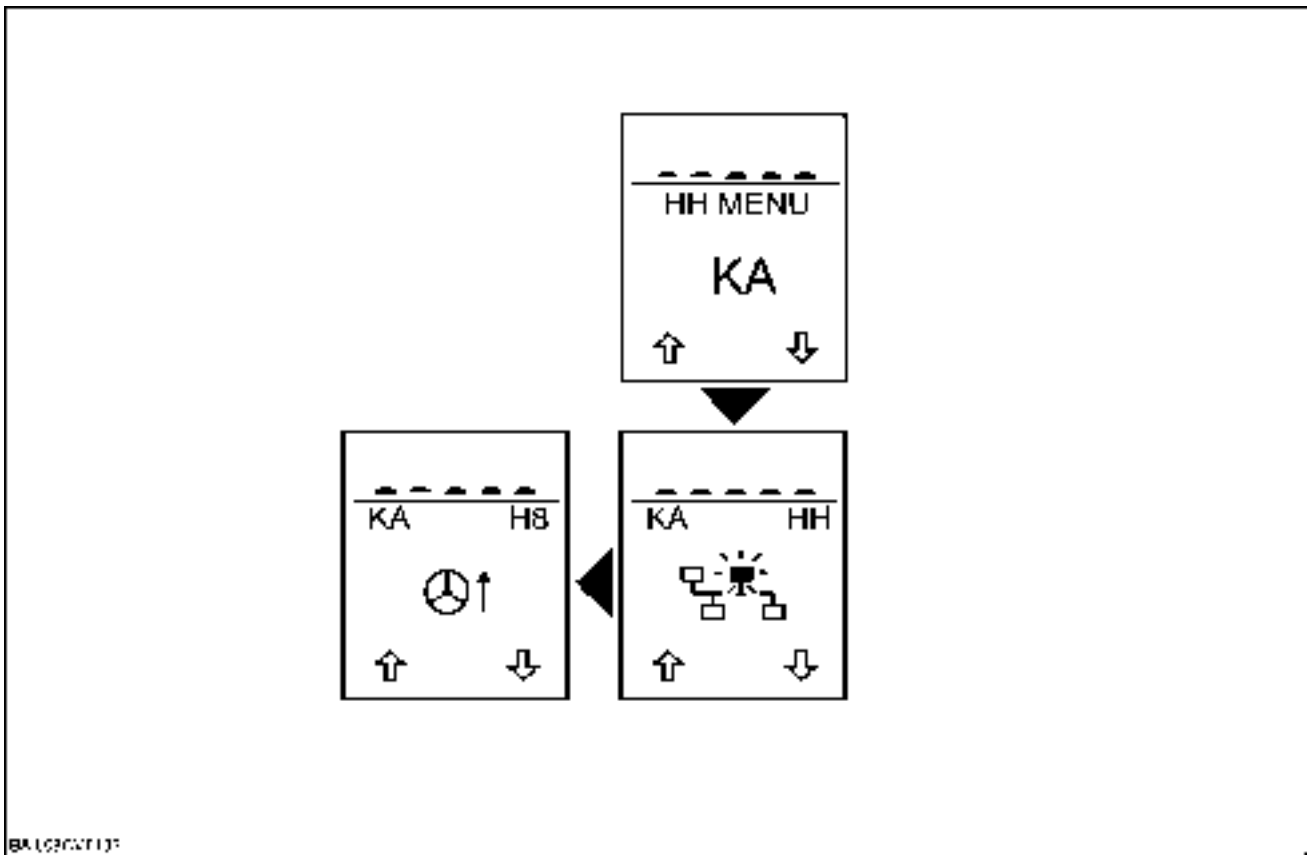

BAIL08CVT133 15

Select the H9 menu by depressing the "menu" key.

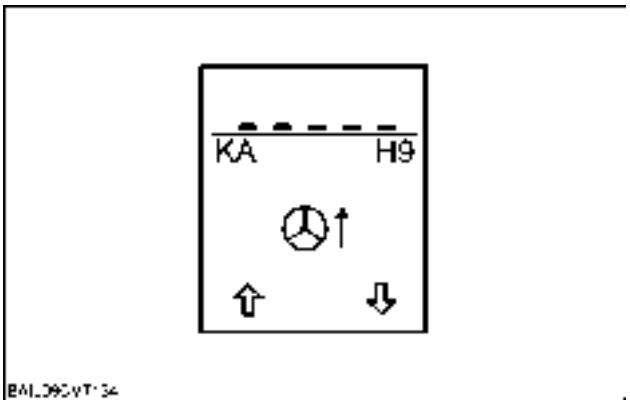

BAIL08CVT134 16

https://tractormanualz.com/

The display will show"ch _"

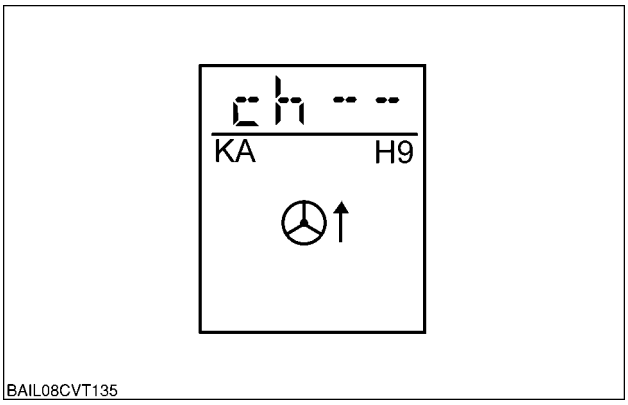

BAIL08CVT135 17

The required channel can be selected by using the "up" and "down" keys.
After a delay the value will be displayed. Compare the value displayed with the typical reading shown in the table below.

NOTE: *The value is the input voltage or signal into the controller. This cannot be directly translated into a voltage due to the internal processes of the controller. A zero equates to* ***0 volts****.*

If the value displayed varies by more than **10 %** to that shown in the table below, a fault is indicated in either the component or the wiring harness relevant to that channel.

NOTE: *Check the connectors of the effected circuit, including the controller connectors, prior to replacing any components.*

Chan-nel	Description	Module Pin	Typical Reading	Notes
1	LVDT secondary winding 1	B5	450 to 750	
2	LVDT secondary winding 2	B6	450 to 750	
3	Proximity sensor	B4	50 to 800	
4	Electrovalve	A6	350 to 500 mA	

https://tractormanualz.com/

HB - DISPLAY STORED FAULT CODES

This menu is used to display fault codes which are stored in the EEPROM of the controller.
A maximum of ten fault codes for each sub-system can be stored.
Common to all sub-systems.

HB Menu Screen Select Diagram

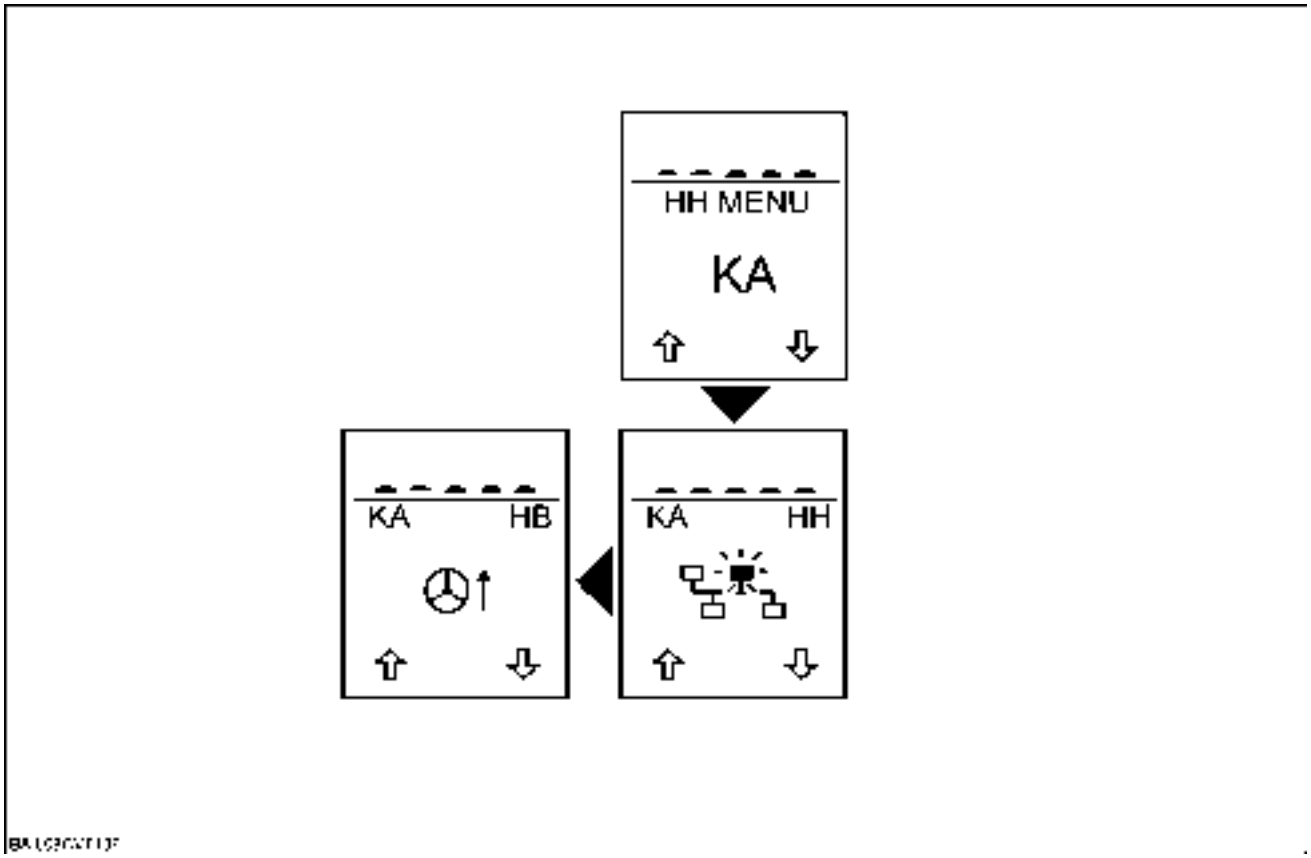

BAIL08CVT136 18

Select the steering sub-system by depressing the "menu" key, as the example shown.

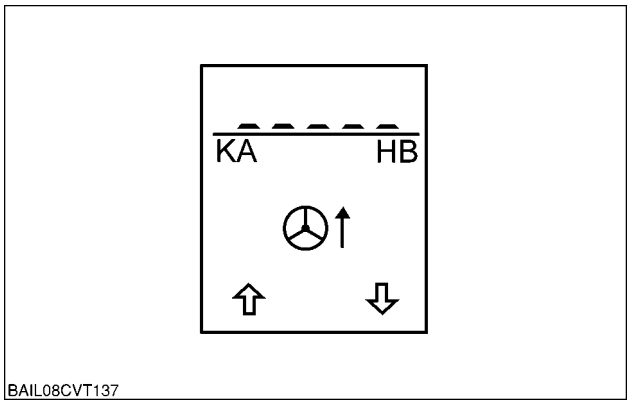

BAIL08CVT137 19

https://tractormanualz.com/

The display will show "_ _ _", if no fault code is stored in the selected sub-system.

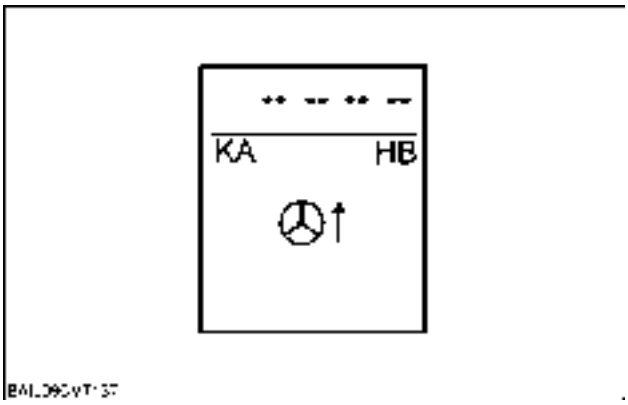

BAIL08CVT138 20

The display will show "F", if a fault code is stored in the selected sub-system.

The display will then automatically cycle through as the example:
15010 Fault code
137 Hour of first occurrence
149 Hour of last occurrence
5 Number of occurrences of the fault

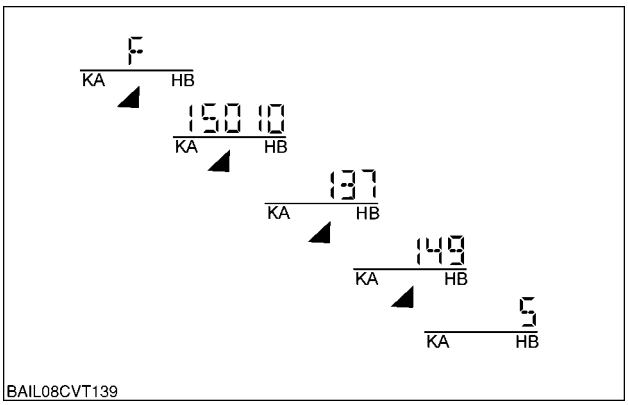

BAIL08CVT139 21

Depress the “up" or “down" key to change to the next fault code in the list.
The lower central display will display “_ _ _" at the end of the list.
Depress the “menu" key to continue navigating through the “HH" menus.

https://tractormanualz.com/

HC - CLEAR STORED FAULT CODES

HC Menu Screen Select Diagram

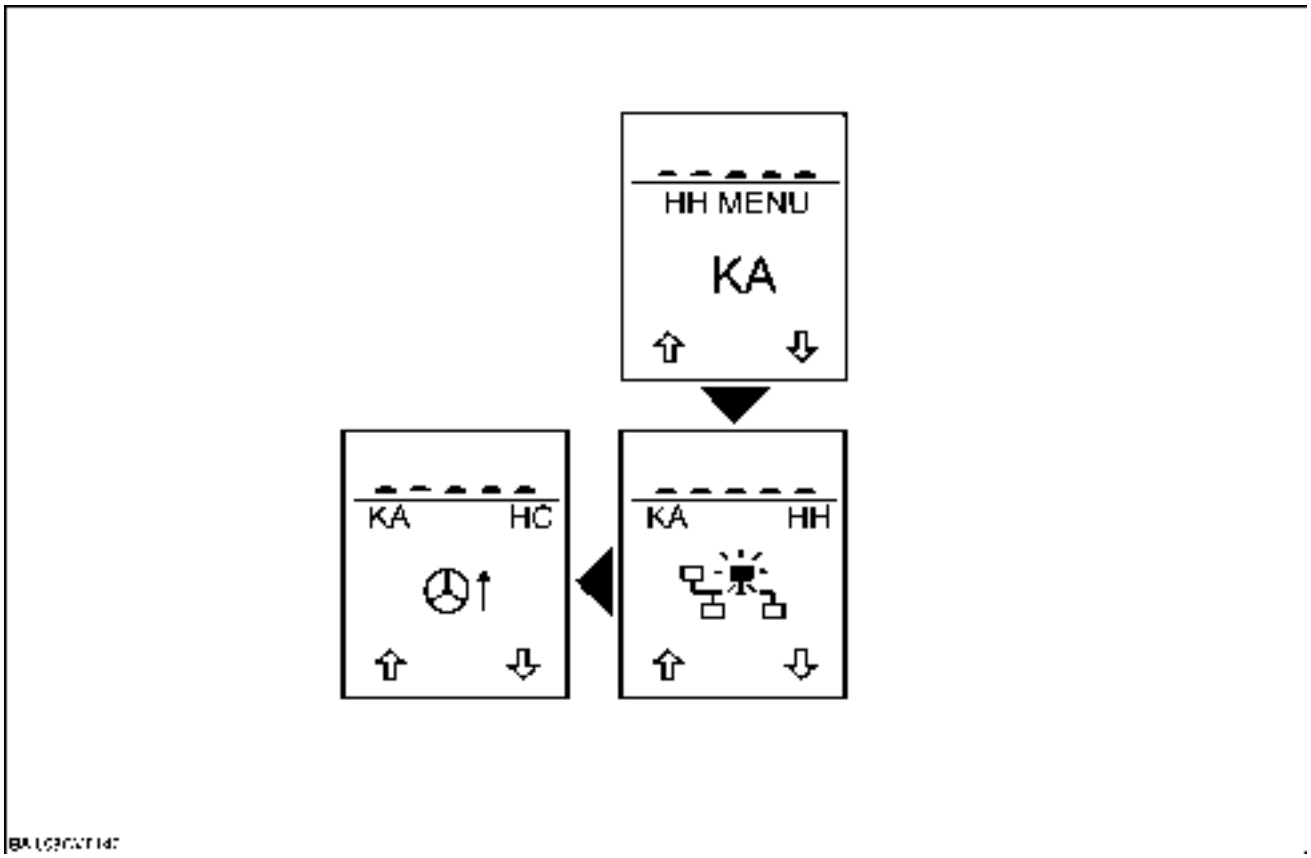

BAIL08CVT140 22

NOTE: *Always make a note of the fault codes stored, before clearing.*

Select the HC menu by depressing the “menu" key.

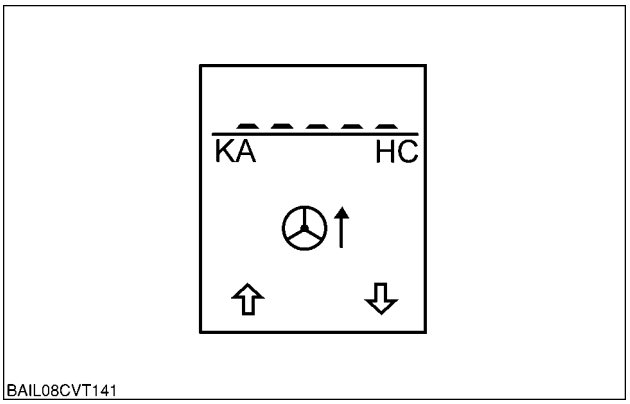

BAIL08CVT141 23

https://tractormanualz.com/

The display will show “F CL".

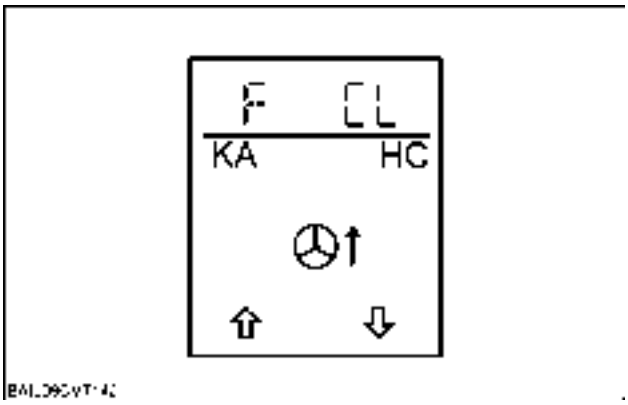

BAIL08CVT142 24

NOTE: *If the navigation “down" key is released before the countdown finishes, the procedure will be aborted.*

Depress and hold the “down" key to confirm the clearing of the memory.
The display will countdown from 05 to 01, then “EE" will be displayed to indicate the fault codes have been cleared.
Depress the “menu" key to continue navigating through the “HH" menus.

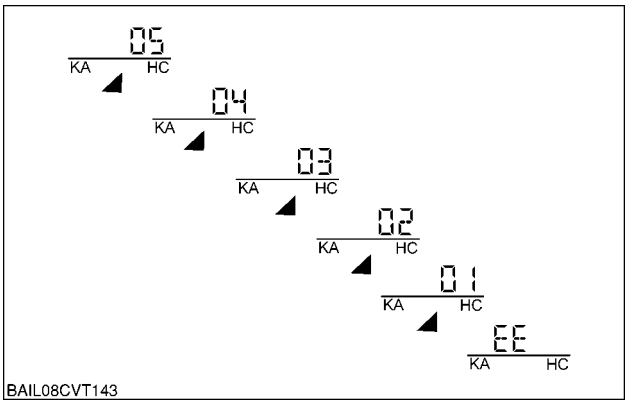

BAIL08CVT143 25

https://tractormanualz.com/

HE - DISPLAY ALL SPEED INPUTS

This menu is used to verify the operation of various frequency inputs.

NOTE: *The vehicle may be driven while in this menu.*

Common to all sub-systems.
HE Menu Screen Select Diagram

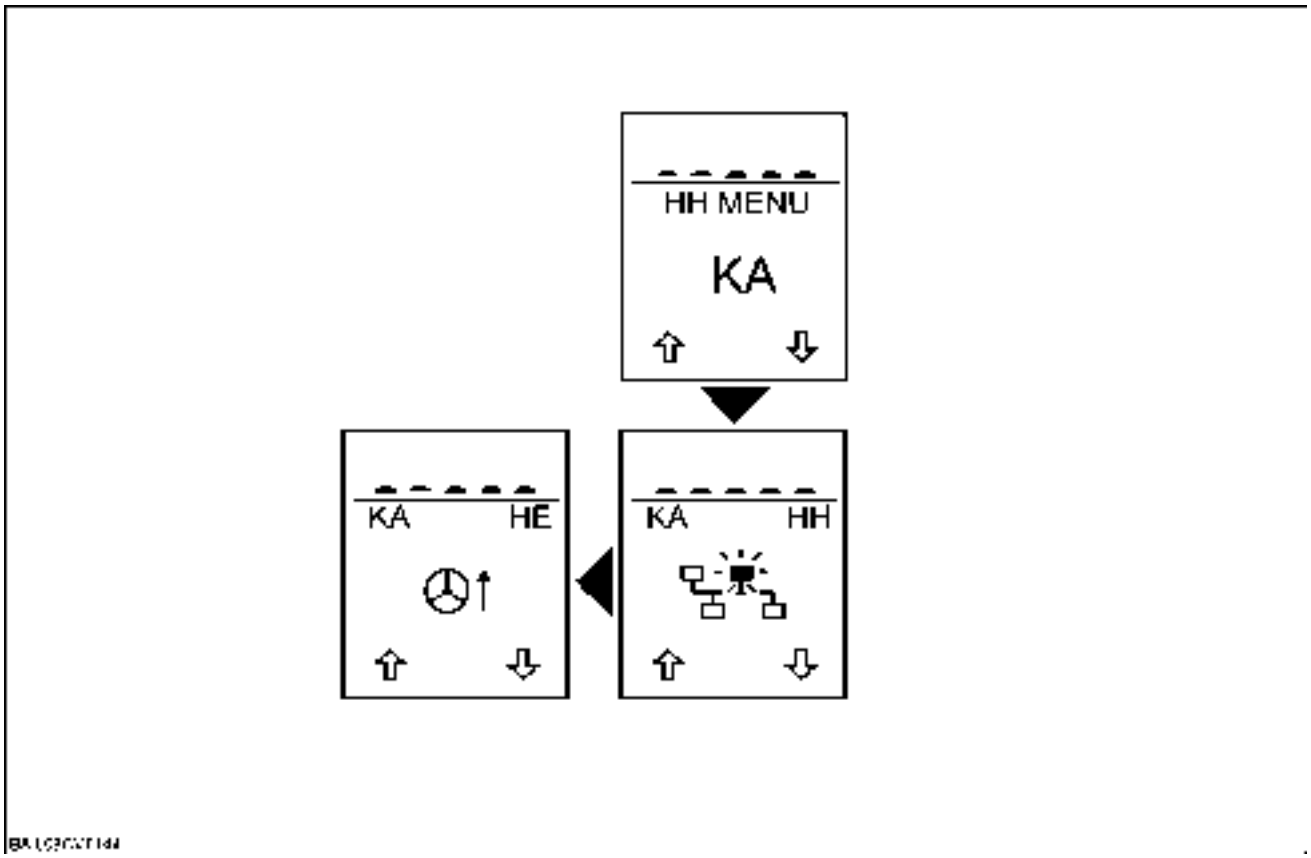

BAIL08CVT144 26

Select the HE menu by depressing the "menu" key.

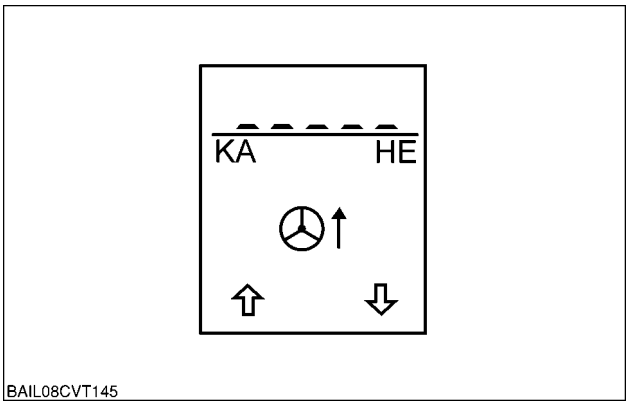

BAIL08CVT145 27

https://tractormanualz.com/

The display will show"ch _"
The required channel can be selected by using the “up" and “down" keys.
Refer to the table below for the available channels.

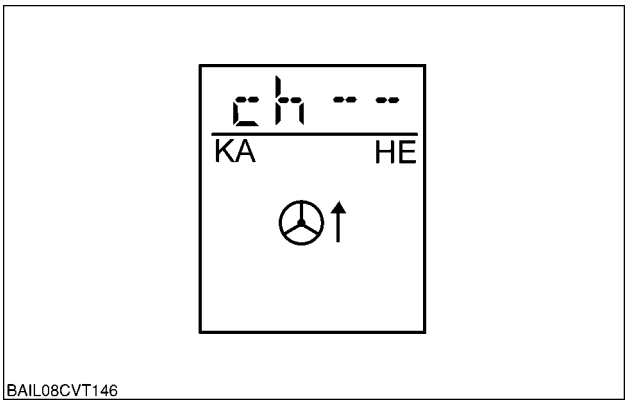

BAIL08CVT146 28

After a delay the value will be displayed.
Depress the “dimming" key to continue navigating through the “HH" menus.

Channel	Description	Typical Reading	Notes
1			
2			

https://tractormanualz.com/

HF - VIEW CONTROLLER HARDWARE INFORMATION

This menu allows the hardware identification, hardware version and serial number to be displayed. Common to all sub-systems.

HF Menu Screen Select Diagram

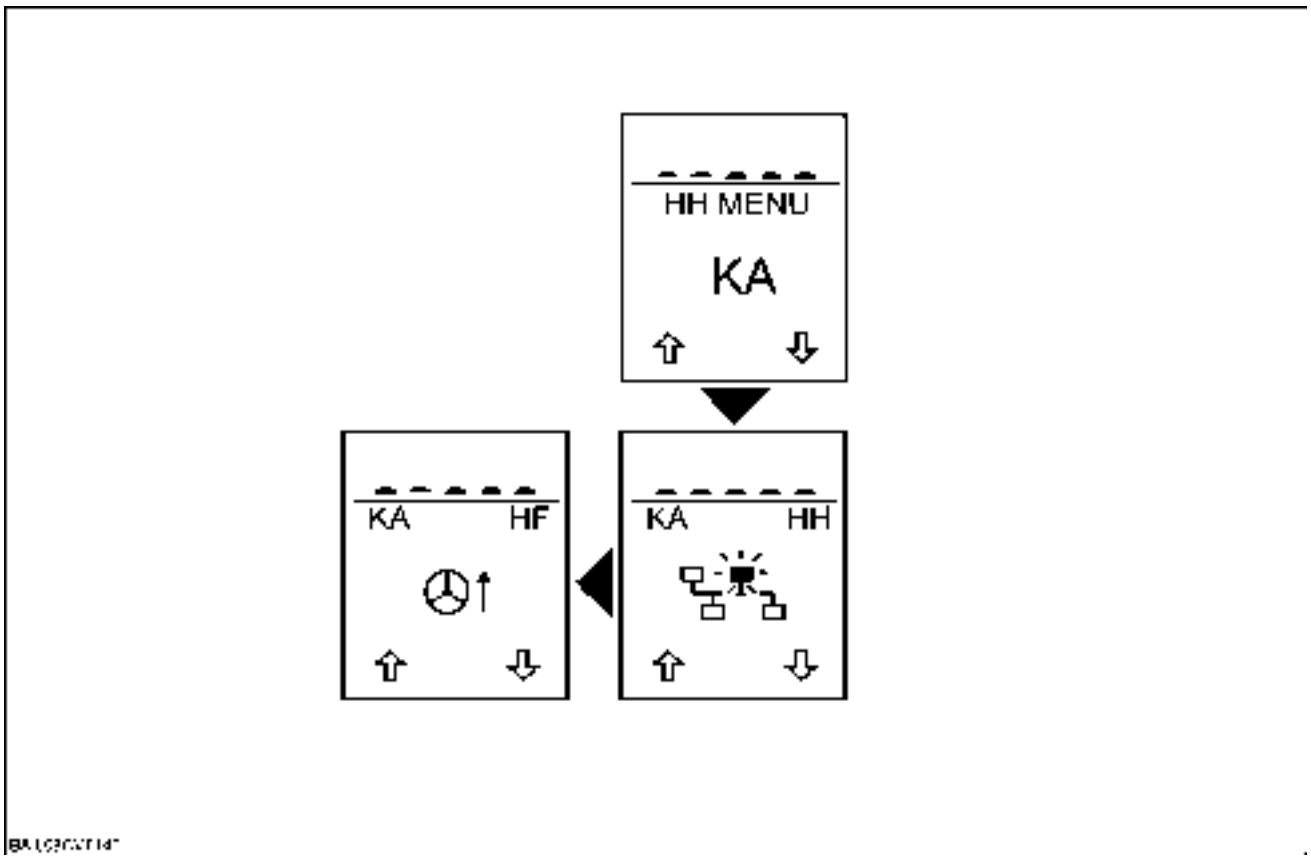

BAIL08CVT147 29

Select the HF menu by depressing the "menu" key.

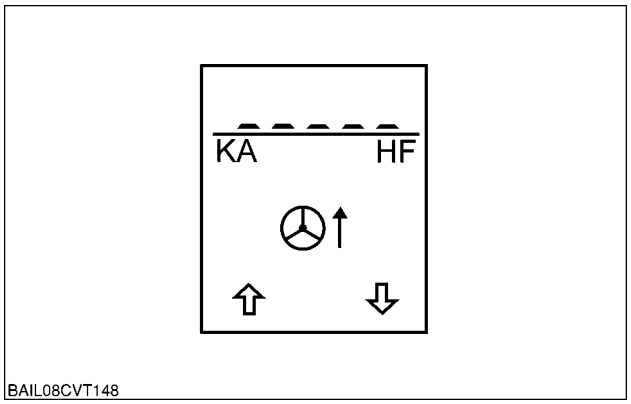

BAIL08CVT148 30

https://tractormanualz.com/

The display will automatically cycle through as the example:
0525 Hardware identification
0100 Hardware version
0000 Hardware version
0000 Serial number
0609 Serial number
0054 Serial number
and return to allow navigation of the “HH" menus.

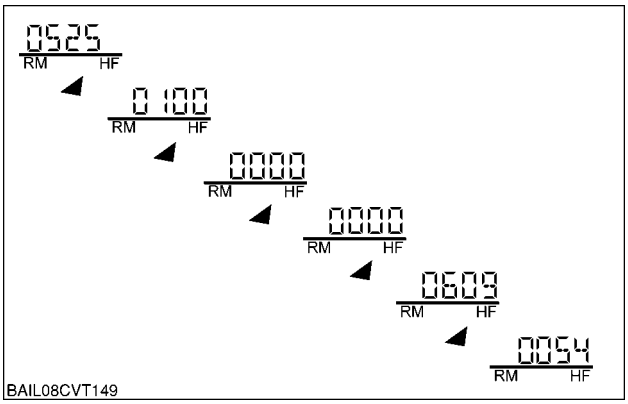

BAIL08CVT149 31

Control module - Configure Armrest

LC - Armrest (ARU)

HH	Service menu	Figure
H1	Not used	-
H2	Not used	-
H3	Not used	-
H4	Display software version number	**1**
H5	Switch diagnostics	**4**
H6	Not used	-
H7	Not used	-
H8	Not used	-
H9	Voltmeter diagnostics	**8**
HA	Not used	-
HB	Display stored fault codes	**11**
HC	Clear all stored fault codes	**15**
HD	Not used	-
HE	Not used	-
HF	Display controller hardware information	**19**
HJ	Not used	-

https://tractormanualz.com/

H4 - DISPLAY SOFTWARE VERSION NUMBER

This function is available in all sub-systems.

H4 Menu page selection diagram

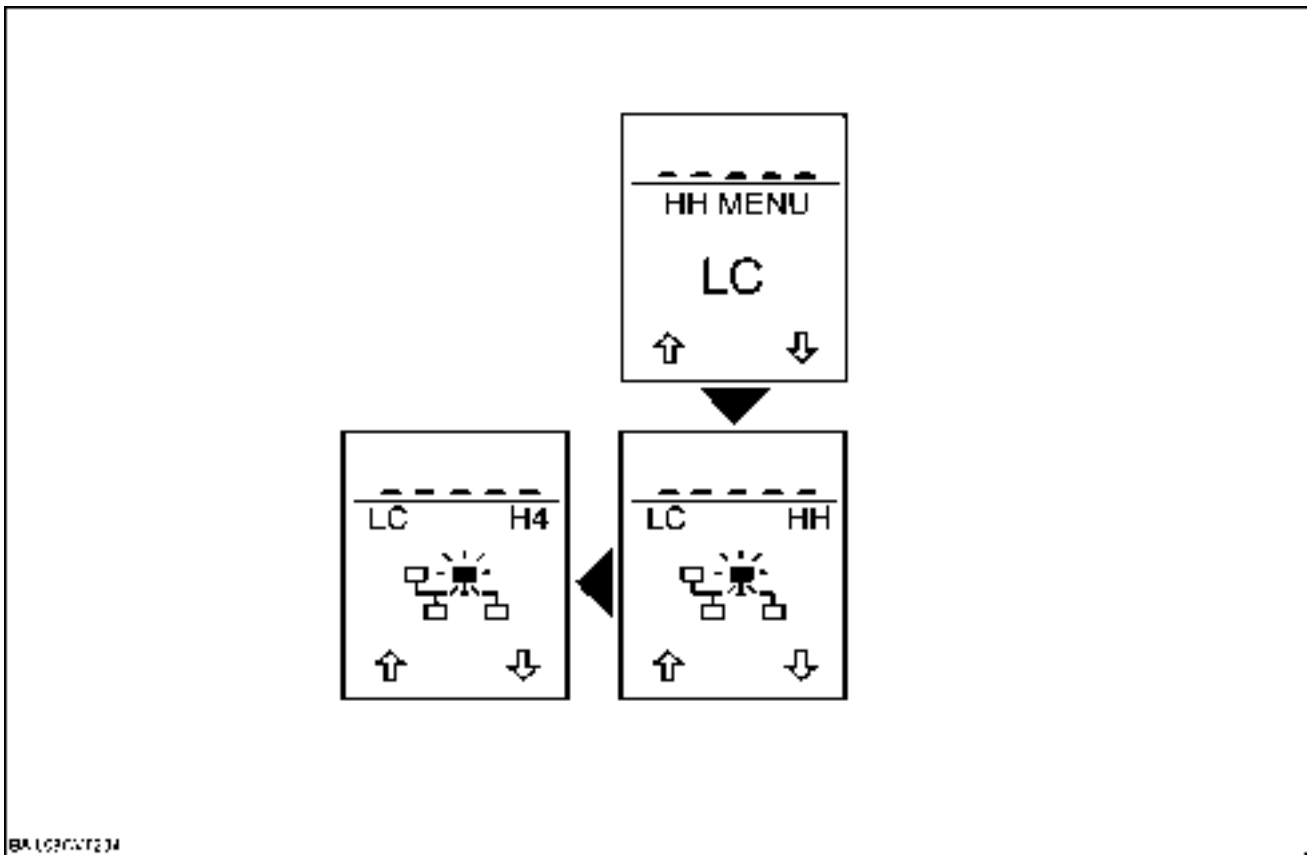

BAIL08CVT234 1

Press the Menu button to call up the H4 Menu.

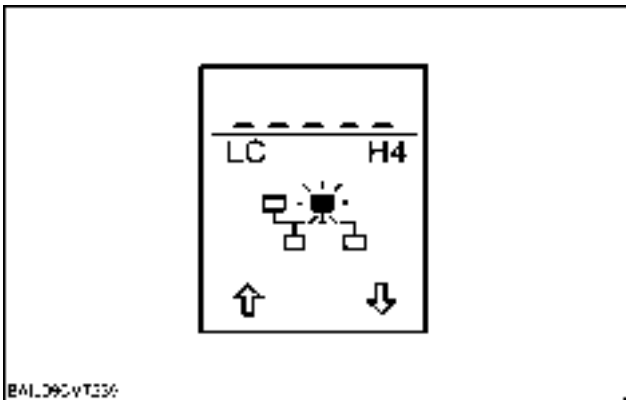

BAIL08CVT235 2

https://tractormanualz.com/

The software version is automatically displayed in the upper section of the display (as in the illustrated example). After that the "HH" menu can be used again.

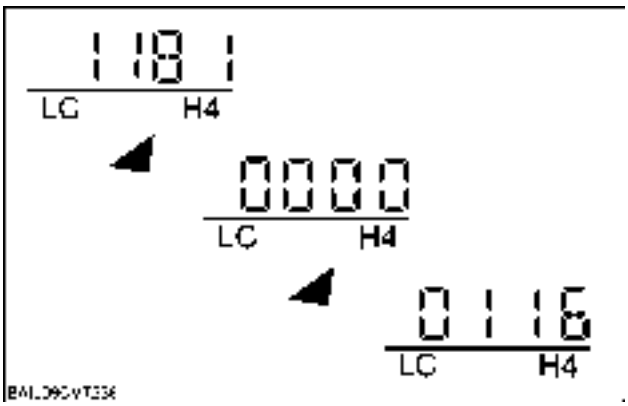

BAIL08CVT236 3

https://tractormanualz.com/

H5 - SWITCH OPERATION TEST

This menu displays a designated code when a switch transition is detected.

H5 Menu Screen Select Diagram

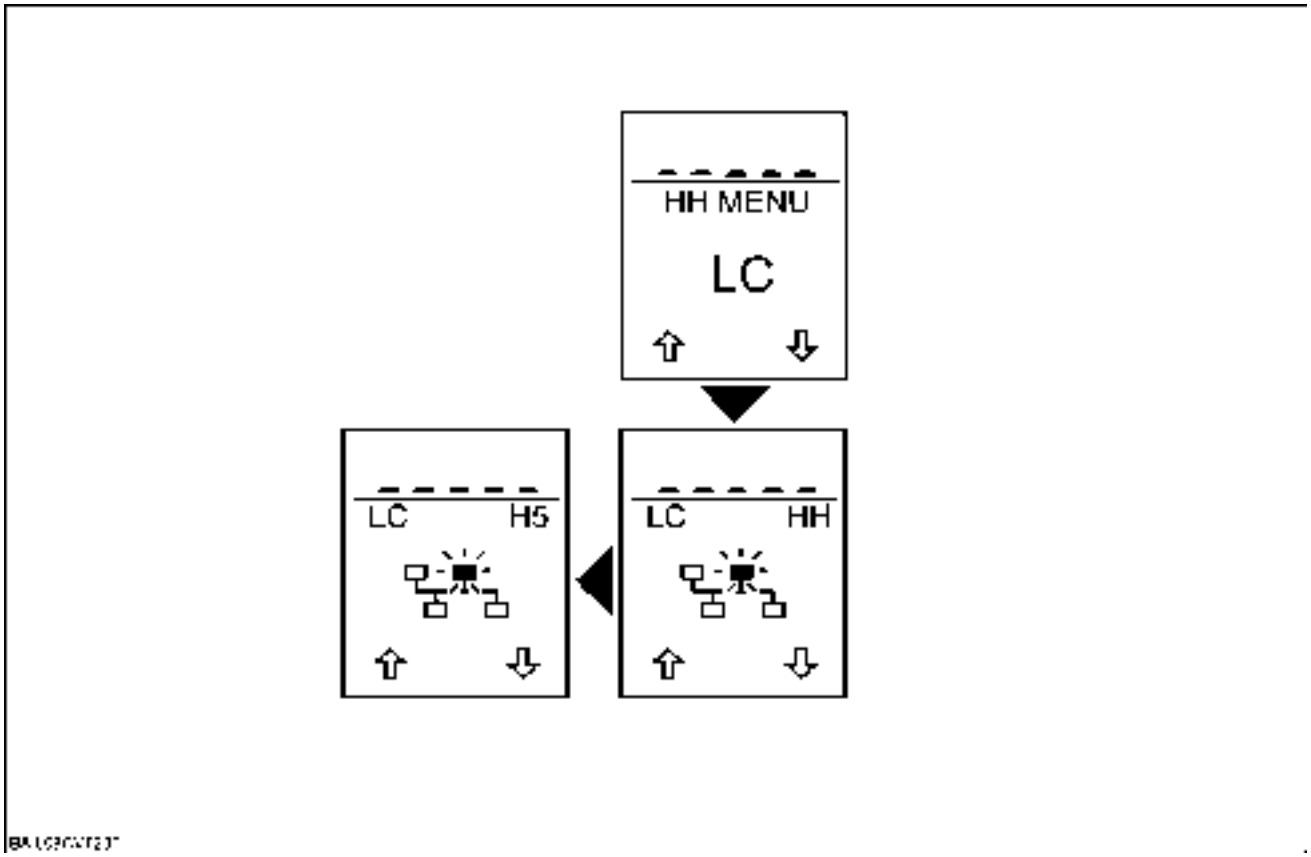

BAIL08CVT237 4

Select the H5 menu by depressing the “menu" key.

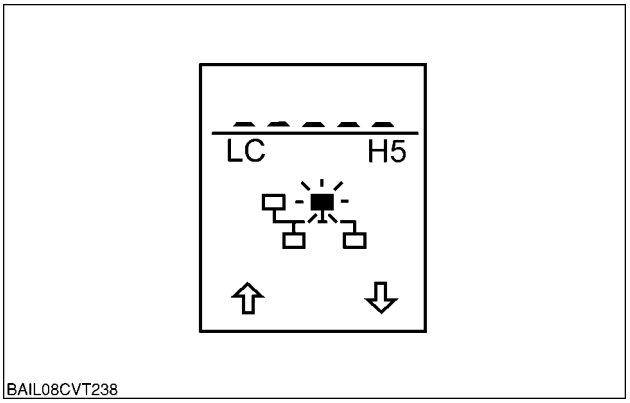

BAIL08CVT238 5

https://tractormanualz.com/

The top section of the display will display “d _ _".

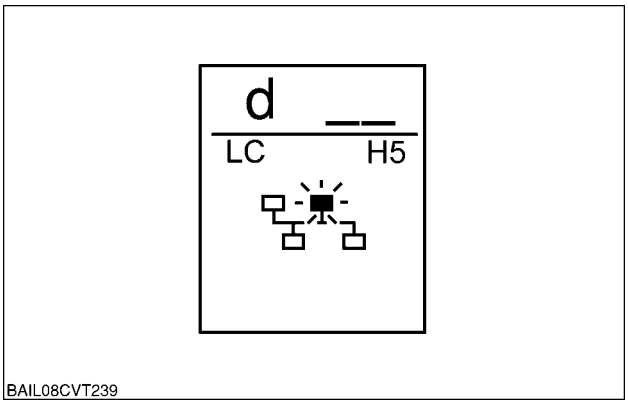

BAIL08CVT239 6

When a switch is operated, a code will be displayed and an audible tone should be heard to indicate the correct function.
If a switch code is not displayed and the audible tone not heard, a ’wiggle’ test can be performed on the related wiring while watching the display or listening for the audible tone, to help locate the fault.

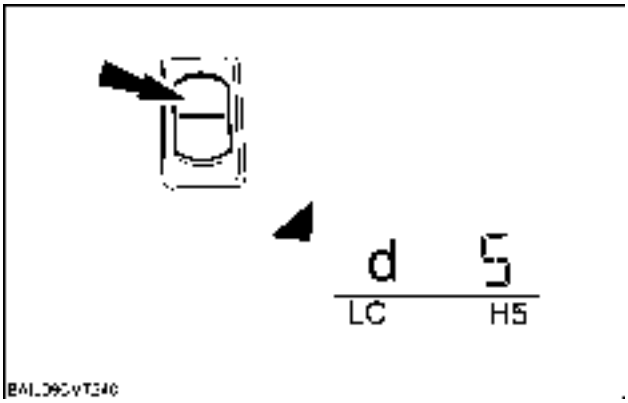

BAIL08CVT240 7

Identifier	Switch / Input	Notes
d5	Multi function handle (MFH) - Rear hitch work switch	
d6	MFH - Rear hitch raise switch	
d19	MFH - 2nd function handle	
d92	Front hitch height limit enable switch	
d95	EHR 1 program / motor mode switch	
d96	EHR 2 program / motor mode switch	
d97	EHR 3 program / motor mode switch	
d98	EHR 4 program / motor mode switch	
d104	MFH - Headland Turn system (HTS) step switch	
d136	MFH - Reverse switch	
d137	MFH - Forward switch	
d153	Joystick 1 - switch 1	
d154	Joystick 1 - switch 2	
d155	Joystick 1 - switch 3	
d156	Joystick 2 - switch 1	
d157	Joystick 2 - switch 2	
d158	Joystick 2 - switch 3	
d159	EHR flow control encoder switch	
d165	EHR float control switch	
d169	MFH - CVT range increase switch	
d170	MFH - CVT range decrease switch	
d177	MFH - Autoguidance engage on/off switch	
d178	MFH EHR 1 extend switch	
d179	MFH EHR 1 retract switch	

https://tractormanualz.com/

H9 - VOLTMETER

This menu is used to verify the operation of various potentiometers, voltage supplies, and solenoid current circuits. If an intermittent fault is detected within a circuit, a 'wiggle' test can be performed on the related wiring while watching the display for sudden changes in values, to help locate the area where the fault exists.

NOTE: *The vehicle may be driven while in this menu.*

H9 Menu Screen Select Diagram

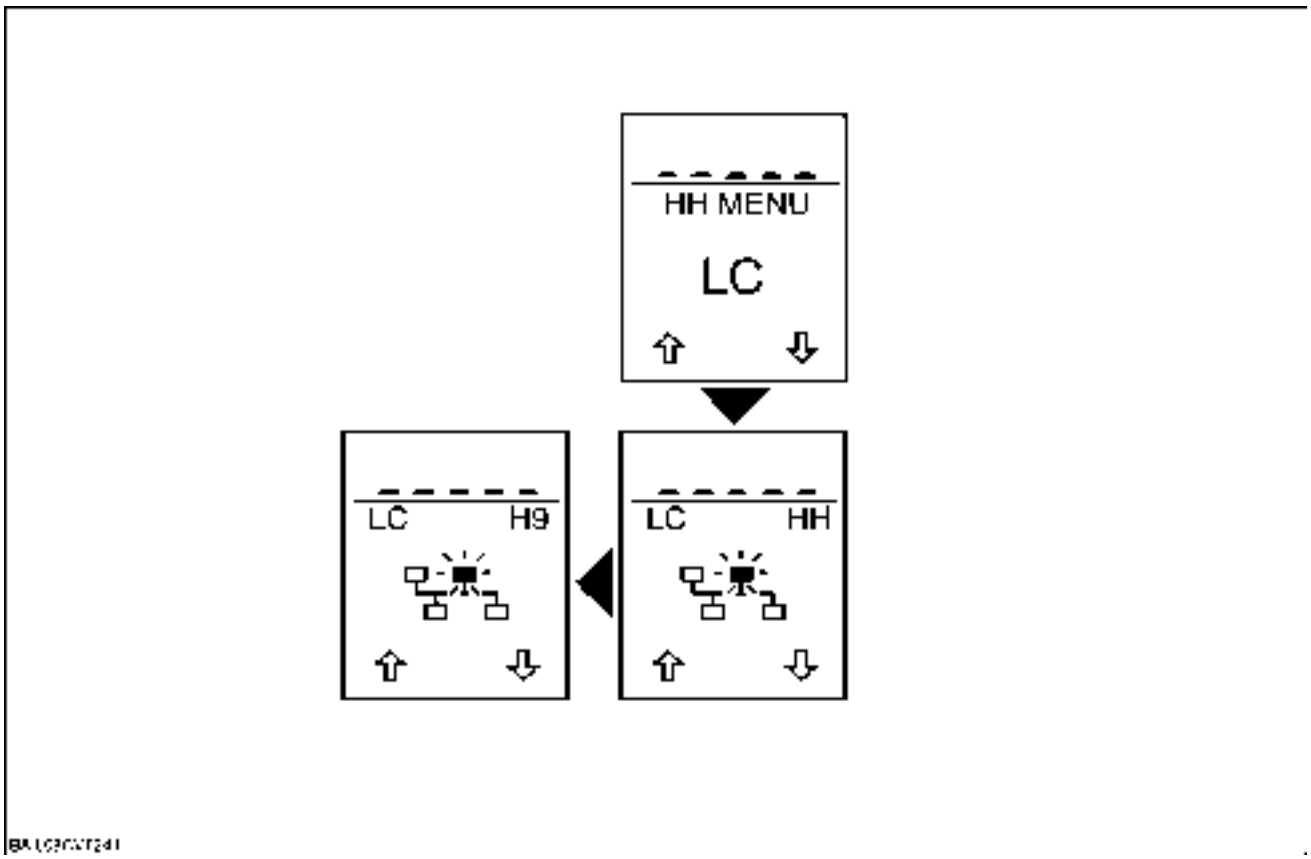

BAIL08CVT241 8

Select the H9 menu by depressing the "menu" key.

The top section of the display will display "ch _ _".

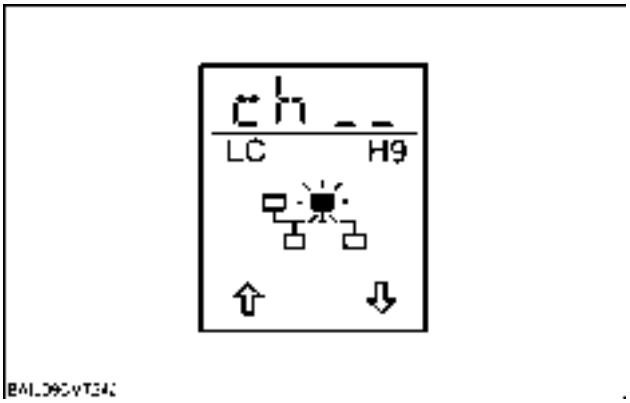

BAIL08CVT242 9

The required channel can be selected by using the navigation "up" and "down" keys.
After a delay the value will be displayed. Compare the value displayed with the typical reading shown in the table below.

NOTE: *The value is the input voltage or signal into the controller. This cannot be directly translated into a voltage due to the internal processes of the controller. A zero equates to* ***0 volts****.*

https://tractormanualz.com/

If the value displayed varies by more than **10 %** to that shown in the table below, a fault is indicated in either the component or the wiring harness relevant to that channel.

NOTE: *Check the connectors of the effected circuit, including the controller connectors, prior to replacing any components.*

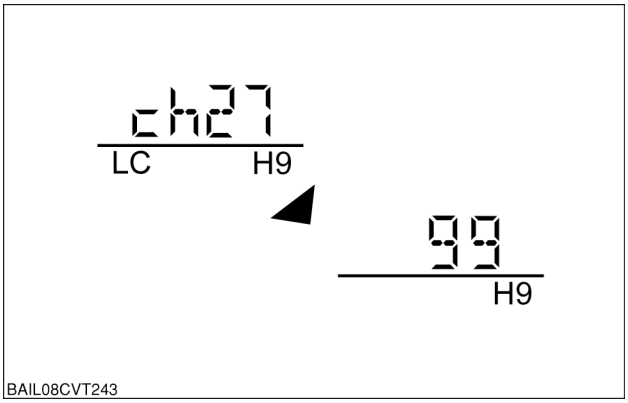

BAIL08CVT243 10

Channel	Description	Typical Reading
27	Front hitch - height limit control	0 anti-clockwise 100 clockwise
33	Rear hitch - draft control	0 anti-clockwise 100 clockwise
34	Rear hitch - drop rate control	0 anti-clockwise 100 clockwise
35	Rear hitch - height limit control	0 anti-clockwise 100 clockwise
36	Rear hitch - sensitivity control	0 anti-clockwise 100 clockwise
37	Rear hitch - slip control	0 anti-clockwise 100 clockwise
40	Rear hitch - position control	0 anti-clockwise 100 clockwise
89	Hand throttle No.2 position	0.0 min throttle 100.0 max throttle
90	Hand throttle No.1 position	0.0 min throttle 100.0 max throttle
97	Joystick 1 - X position	0.0 at centre 100.0 left/right
98	Joystick 1 - Y position	0.0 at centre 100.0 up/down
101	EHR No.1 lever position	97.0 raise, 55.0 neutral 12.0 lower, 1.0 float
102	EHR No.2 lever position	97.0 raise, 55.0 neutral 12.0 lower, 1.0 float
103	EHR No.3 lever position	97.0 raise, 55.0 neutral 12.0 lower, 1.0 float
104	EHR No.4 lever position	97.0 raise, 55.0 neutral 12.0 lower, 1.0 float
140	Multifunction handle position	0.0 fully back 100.0 fully forward
143	Joystick 1 - proportional rocker	50 centre 0 pressed down, 100 pressed up
145	Vref 1	927
149	EHR flow encoder	Not available
150	Multi Function Handle encoder	Not available

https://tractormanualz.com/

HB - DISPLAY STORED FAULT CODES

This menu is used to display the fault codes, which are stored in the EEPROM of the electronic control unit. This function is available in all sub-systems.

HB Menu page selection diagram

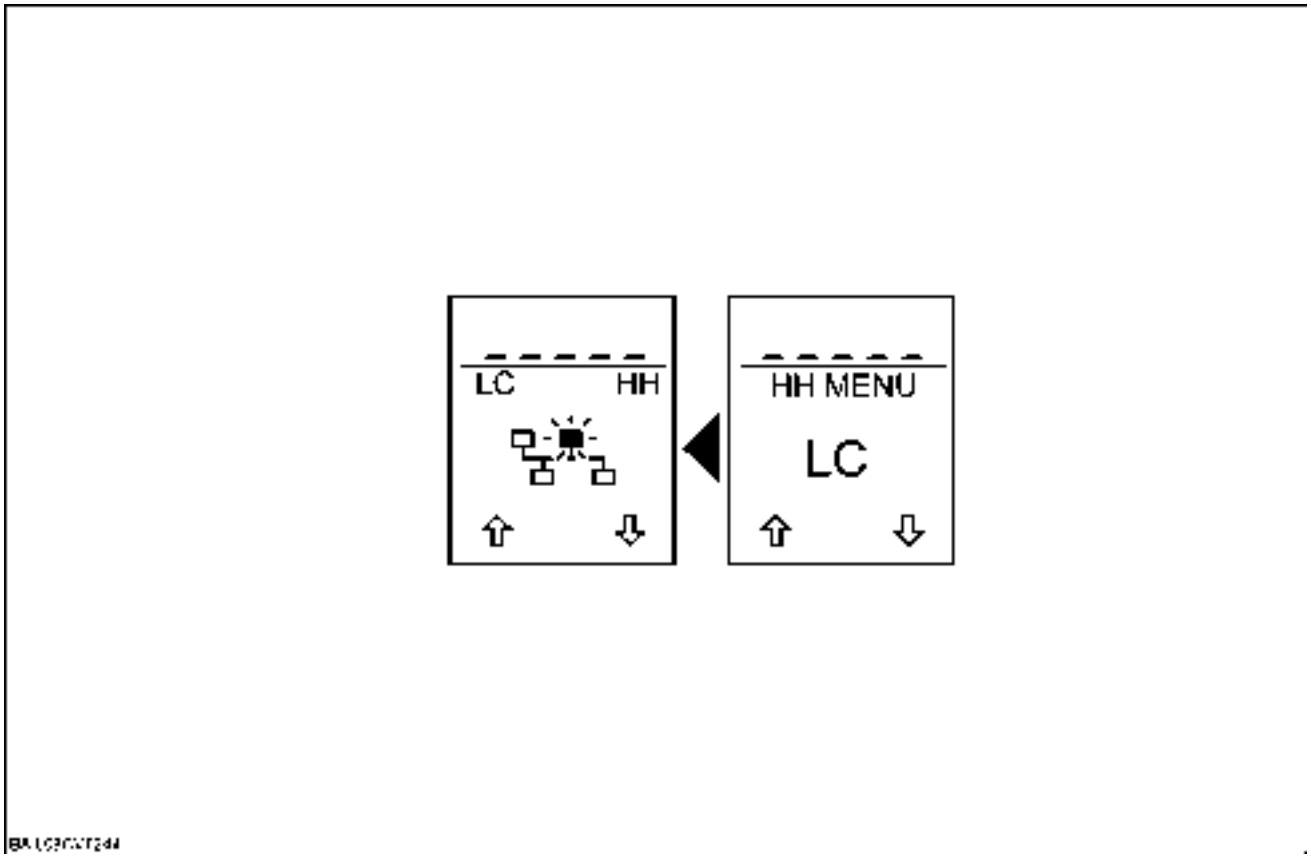

BAIL08CVT244 11

Press the Menu button to call up the HB Menu.

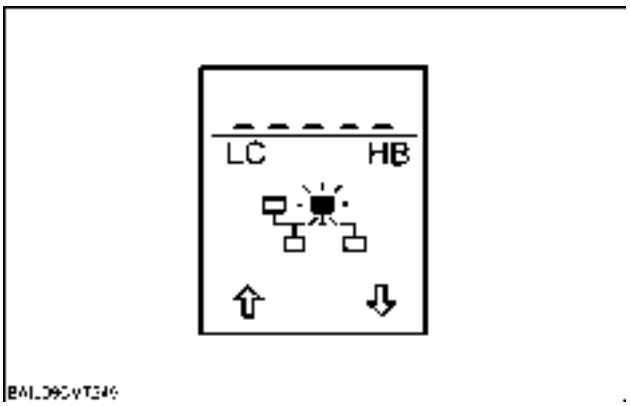

BAIL08CVT245 12

https://tractormanualz.com/

"_ _ _ _" is displayed in the upper section of the display, when no fault code is stored in the selected sub-system.

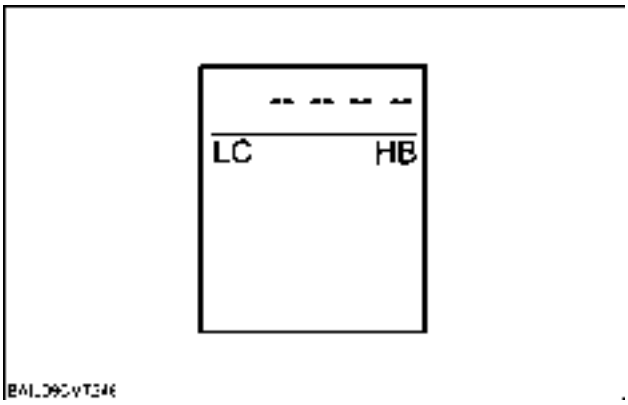

BAIL08CVT246 13

"F" is displayed in the upper section of the display, if a fault code is stored in the selected sub-system.
The sequence of the data display runs through in the upper section of the display, for example, as follows:

18001 Fault code
05 Operating hours at the time of the first occurrence
49 Operating hours at the time of the last occurrence
54 Frequency of occurrence

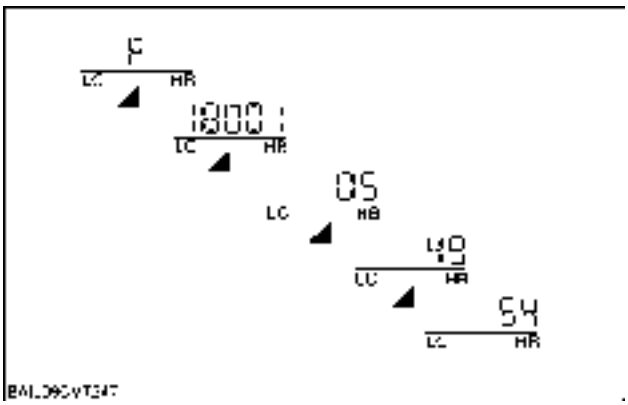

BAIL08CVT247 14

Press the "Up" or "Down" navigation button to change to the next fault code in the list.

As soon as the end of the list is reached, "_ _ _" is displayed in the upper section of the display.

To use the "HH" menu further, press the Menu button.

https://tractormanualz.com/

HC - CLEAR ALL STORED FAULT CODES

HC Menu page selection diagram

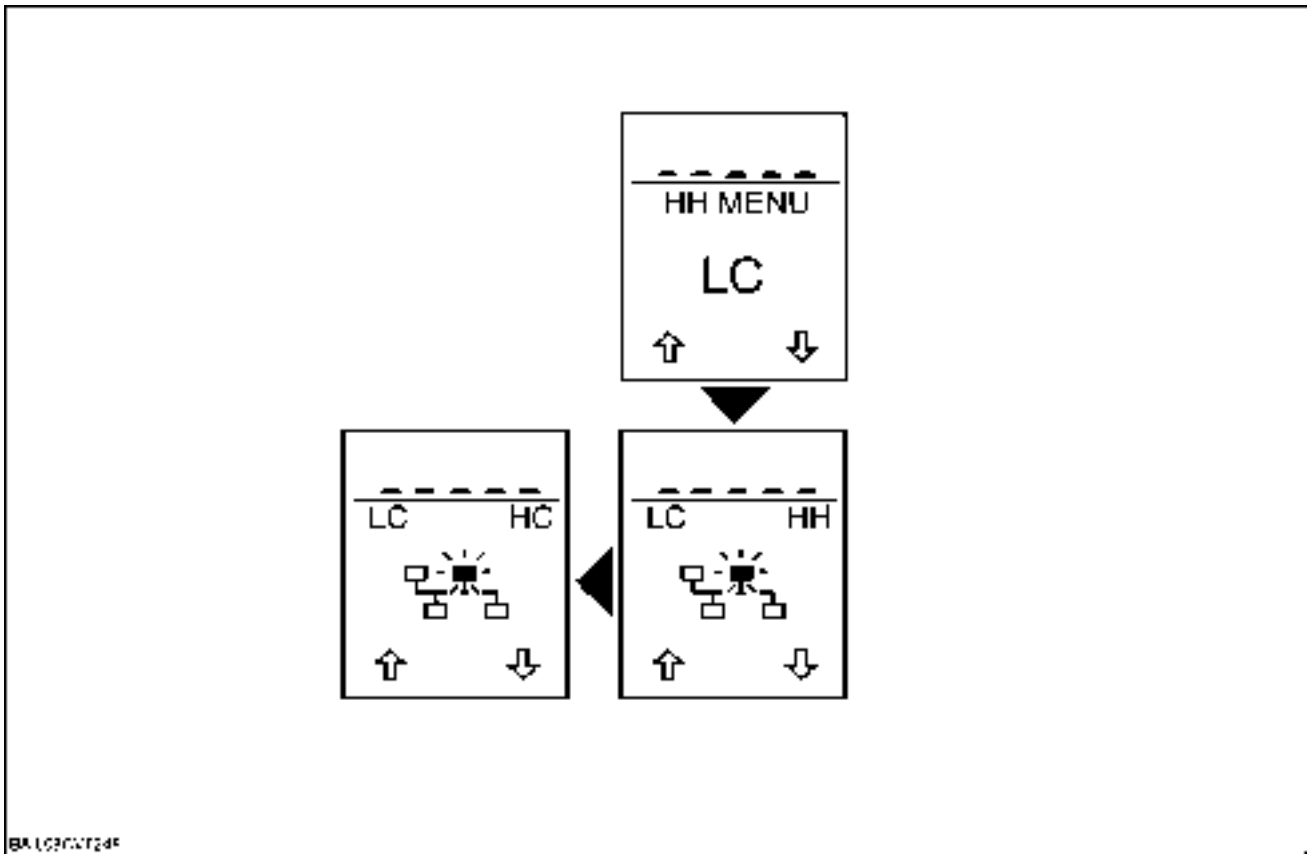

BAIL08CVT248 15

NOTE: *Always write the stored fault codes down before clearing.*

Press the Menu button to call up the HC Menu.

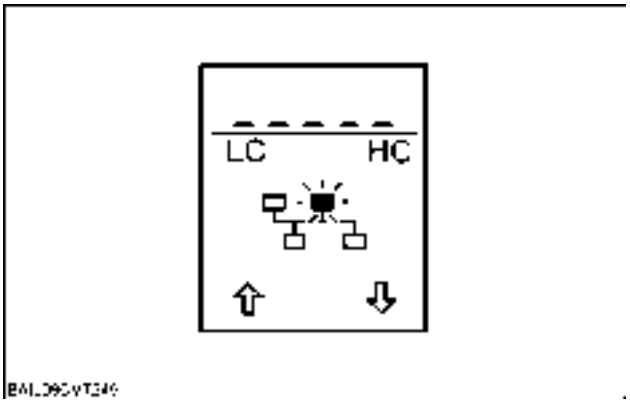

BAIL08CVT249 16

https://tractormanualz.com/

"F CL" is displayed in the upper section of the display.

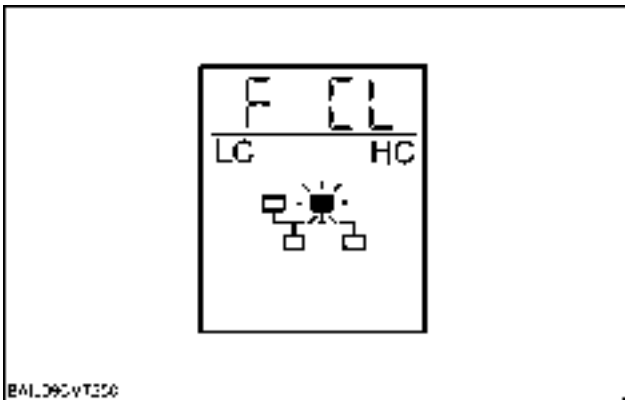

BAIL08CVT250 17

NOTE: *If the "Down" navigation button is released before the end of the countdown, the process is aborted.*

To confirm clearing the memory, press and hold the "Down" navigation button.

NOTE: *The numbers 05 to 01 run backwards in the upper section of the display, then "EE" appears to inform you that the fault codes have been cleared.*

To use the "HH" menu further, press the Menu button.

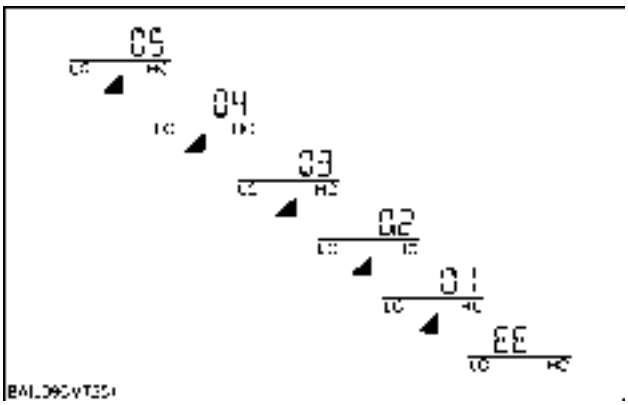

BAIL08CVT251 18

https://tractormanualz.com/

HF - DISPLAY CONTROLLER HARDWARE INFORMATION

This menu makes possible hardware identification; the hardware version and serial number are displayed. This function is available in all sub-systems.

HF Menu page selection diagram

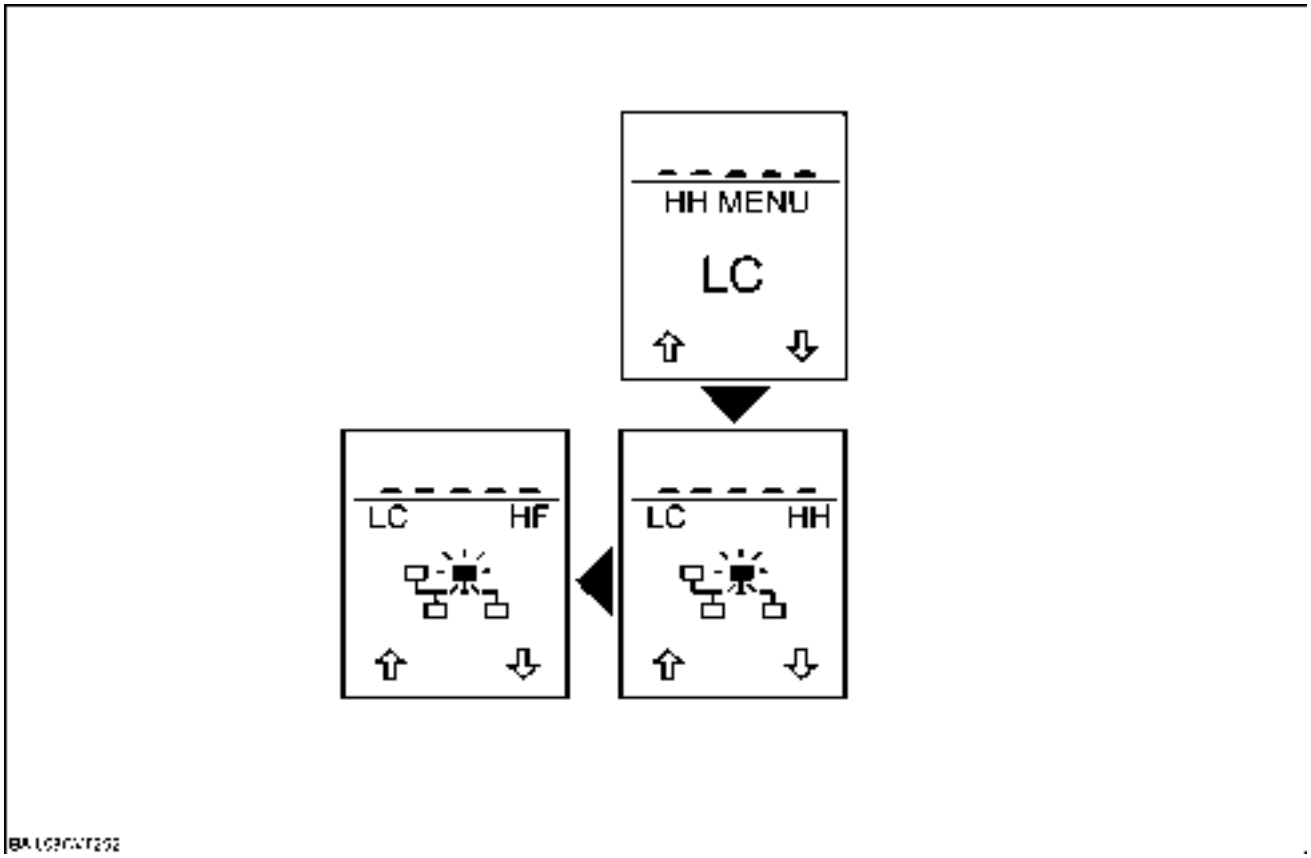

BAIL08CVT252 19

Press the Menu button to call up the HF Menu.

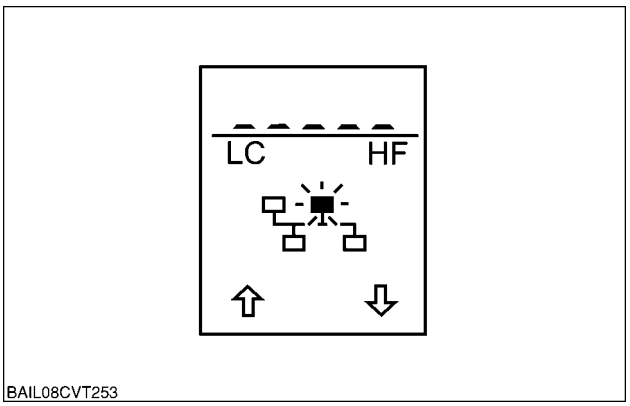

BAIL08CVT253 20

https://tractormanualz.com/

The sequence of the data display runs through automatically in the upper section of the display, for example, as follows:

618 Hardware identification
0100 Hardware version
0000 Hardware version
0000 Serial number
0000 Serial number
0000 Serial number
After that the "HH" menu can be used again.

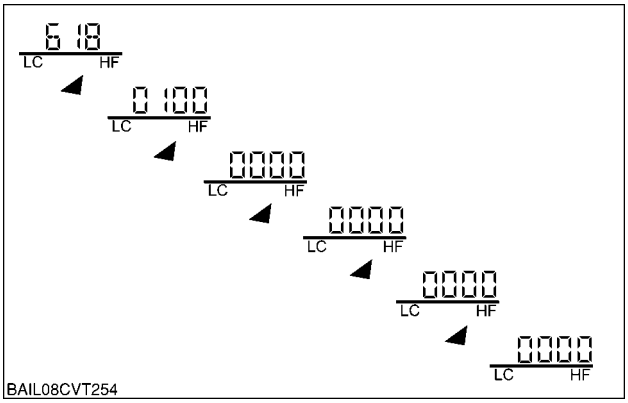

BAIL08CVT254 21

Control module - Configure Electronic Park Lock (EPL)

XA Control Module

HH	Service Menu	Figure Number
H1	Calibration procedures	**1**
H2	View stored calibration values	**2**
H3	Configurations and options	**5**
H4	View software revision level	**10**
H5	Switch operation test	**13**
H6	Not used	-
H7	Not used	-
H8	Clear Electrically Erasable Programmable Read Only Memory (EEPROM)	**17**
H9	Voltmeter	**21**
HA	Not used	-
HB	Display stored fault codes	**25**
HC	Clear all stored fault codes	**29**
HE	Not used	-
HF	View controller hardware information	**33**
HJ	Not used	-

https://tractormanualz.com/

H1 - CALIBRATION PROCEDURES

This menu is used to calibrate the Electronic Park Lock, refer to **PARKING BRAKE Electronic - Calibrate (D.32.D)**.

H1 Menu Screen Select Diagram

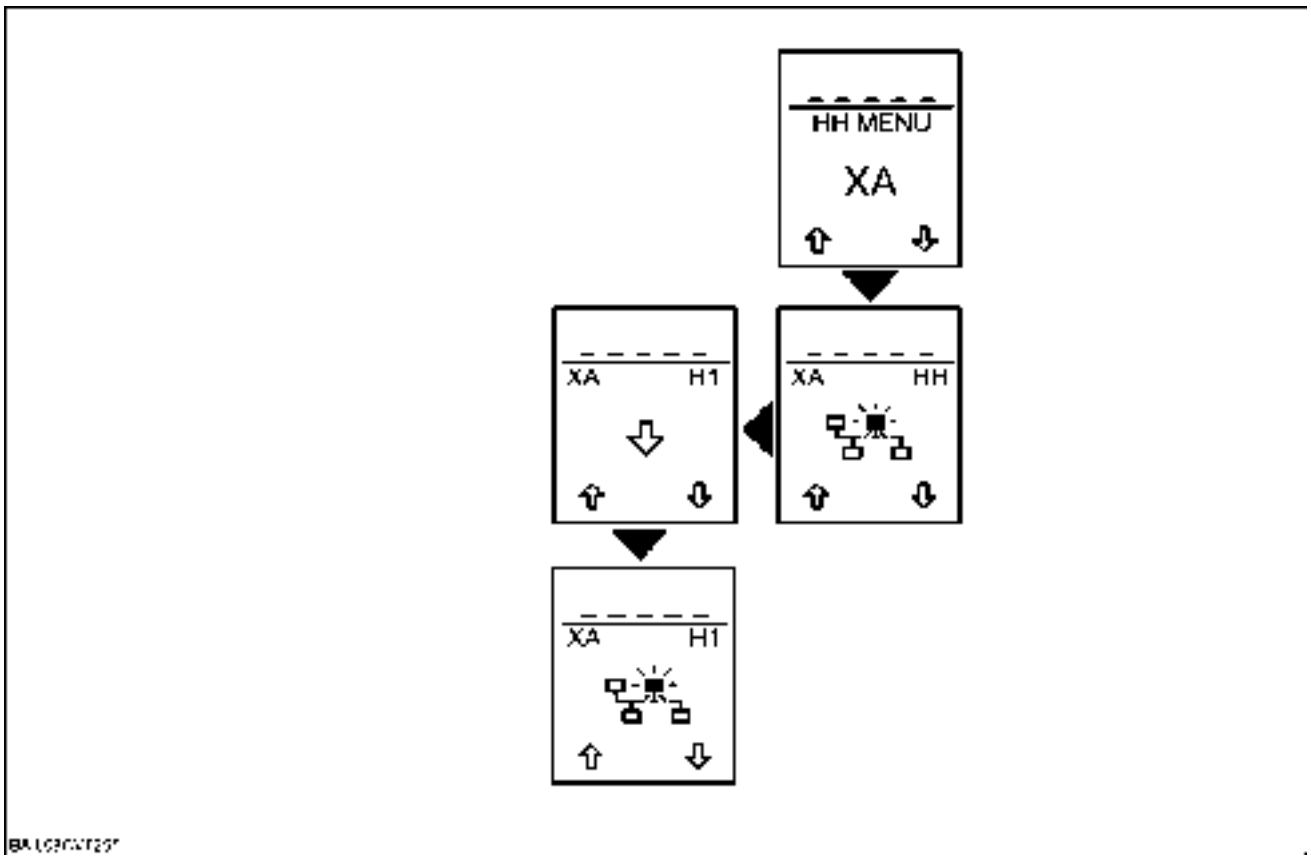

BAIL08CVT255 1

https://tractormanualz.com/

H2 - VIEW STORED CALIBRATION VALUES

This menu is used to display the calibration values stored in the controller for the Electronic Park Lock

H2 Menu Screen Select Diagram

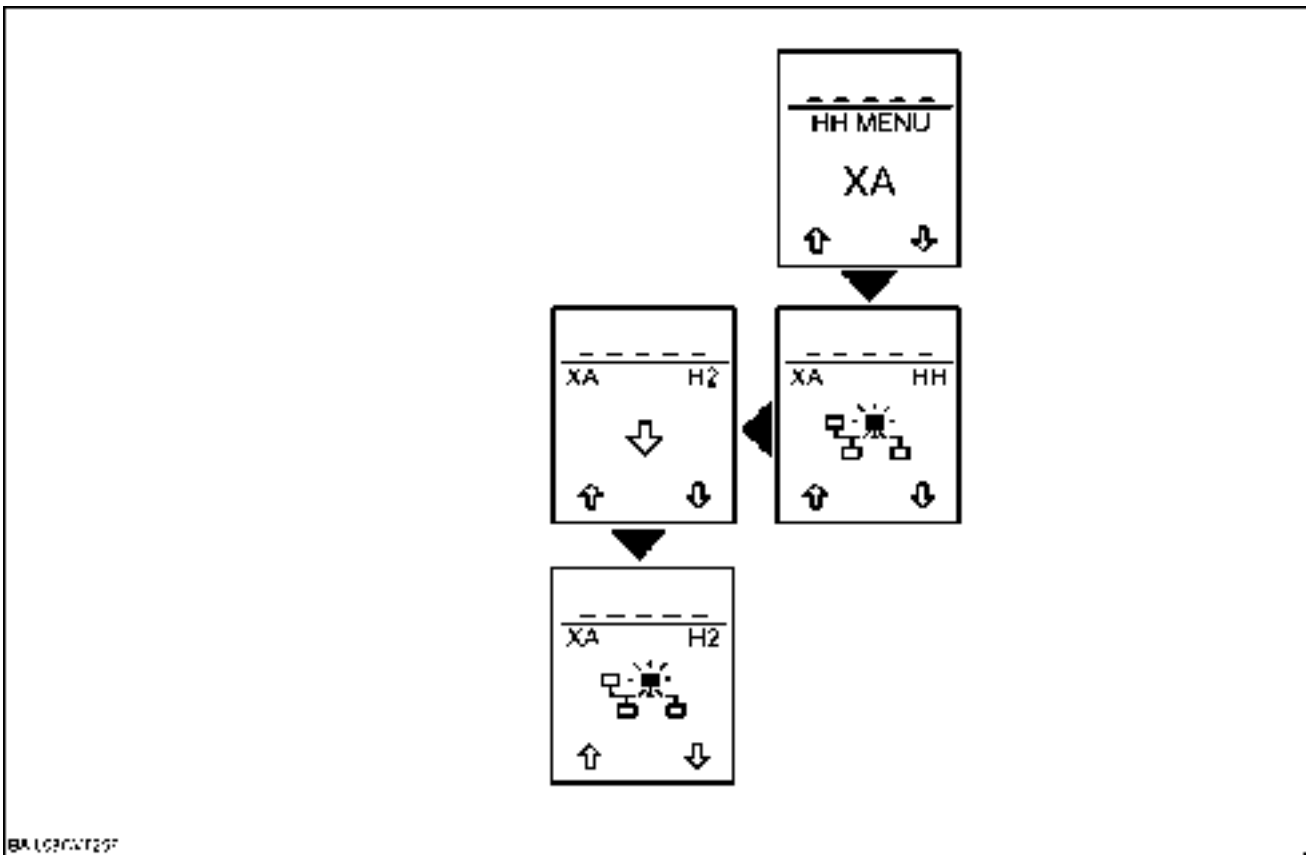

BAIL08CVT256 2

https://tractormanualz.com/

ELECTRONIC PARK LOCK VALUES

Select the electronic park lock sub system by depressing the "menu" key.

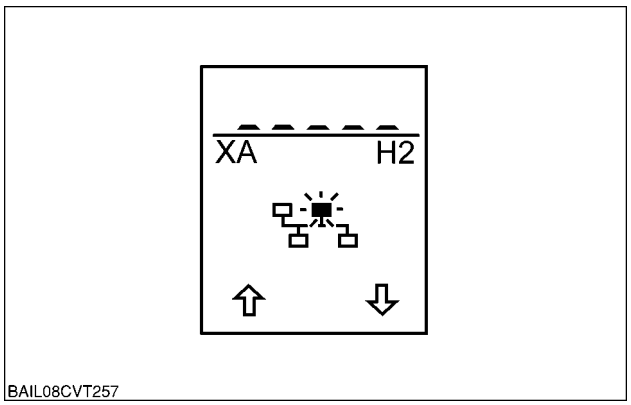

BAIL08CVT257 3

The upper section of the display will display "ch - -".
The required channel can be selected by using the navigation "up" and "down" keys.

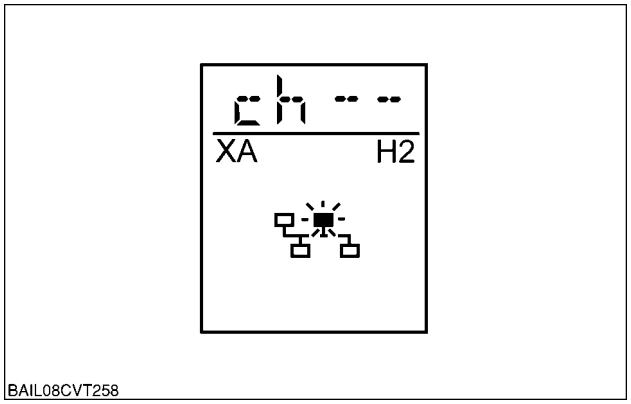

BAIL08CVT258 4

After a delay the code followed by the calibration value will be displayed, (refer to the table below for the description of each channel).
Depress the "menu" key to continue navigating through the "HH" menus.

Channel	Description	Value Range
Ch 1	Accelerometer offset	-45.0 to 45.0
Ch 2	Applied position	0.0 to 65.0
Ch 3	Released position	0.0 to 65.0
Ch 4	Bite point position	0.0 to 65.0
Ch 5	Number of apply actuations	0 to 99999999
Ch 6	Number of apply actuations while tractor moving	0 to 99999999

https://tractormanualz.com/

H3 - CONFIGURATIONS

Used to display the configurations available for the electronic park lock.

1. Electronic park lock
   - Ch.1 Electronic park lock enable option
   - Ch.2 Trailer brake present

H3 Menu Screen Select Diagram

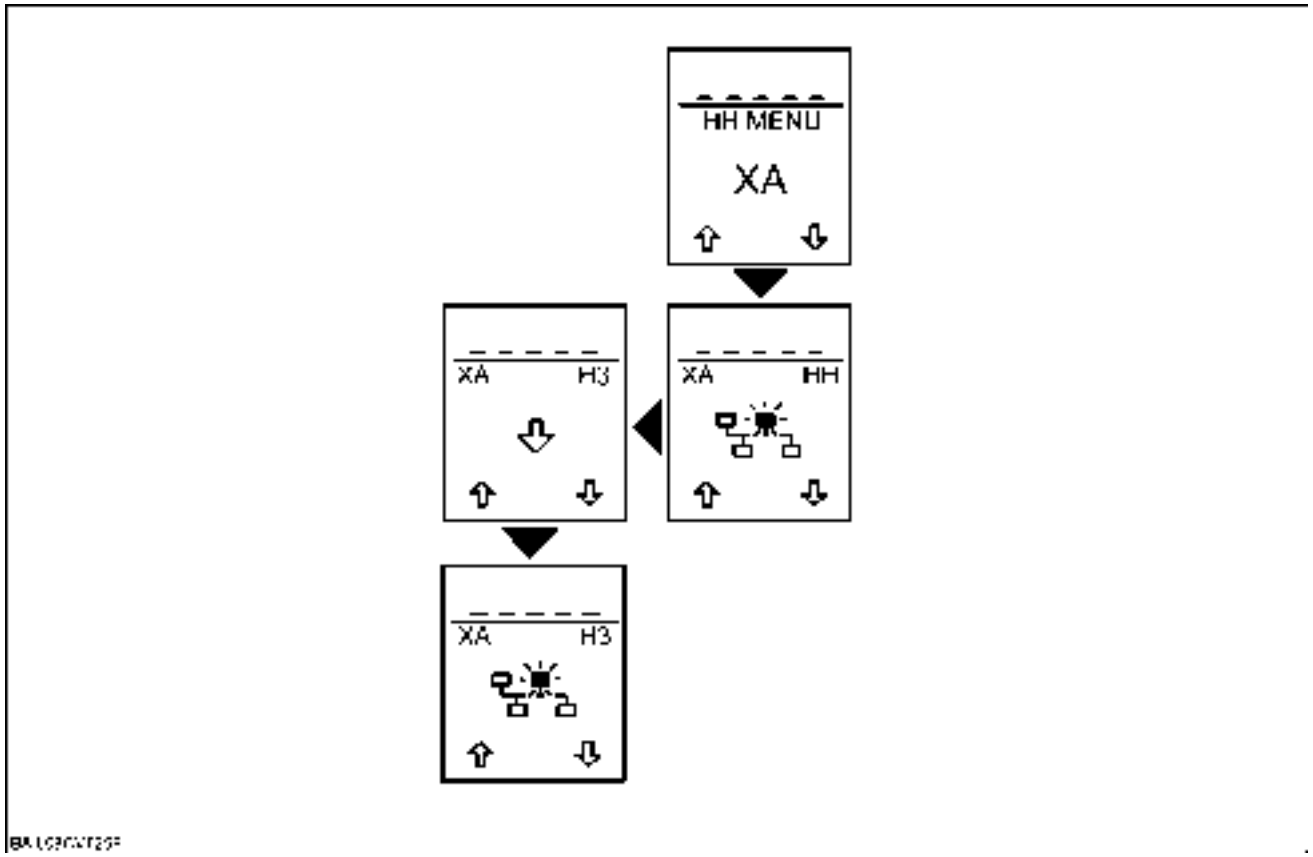

BAIL08CVT259 5

https://tractormanualz.com/

ELECTRONIC PARK BRAKE OPTIONS

Select the EPL sub-system by depressing the "menu" key.

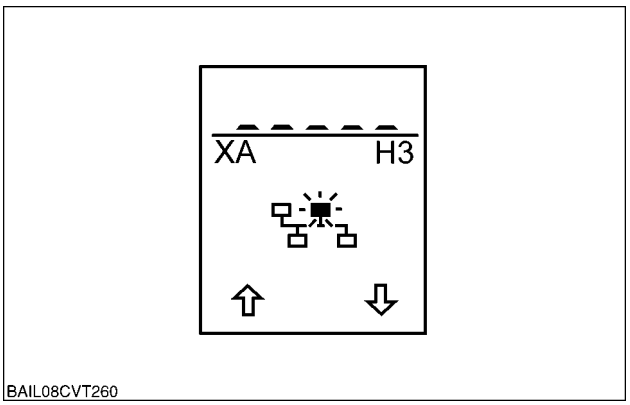

BAIL08CVT260 6

The lower central display will display "ch - -".
The required channel can be selected by using the "up" and "down" keys.

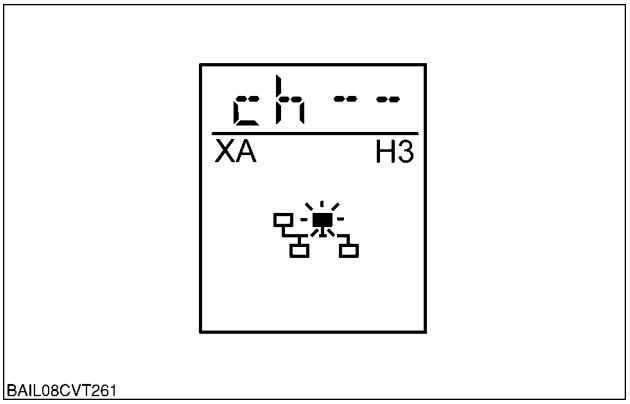

BAIL08CVT261 7

After a delay the current setting will be displayed. (see the table below for the description of each channel).

Channel	Description
Ch 1	Electronic Park Lock enable option
Ch 2	Trailer brake present

https://tractormanualz.com/

Channel 1 - Electronic Park Lock Option

Scroll through the available options using the navigation "up" or "down" key.

The options available are:

- 0001 - Enable EPL
- 0000- Disable EPL

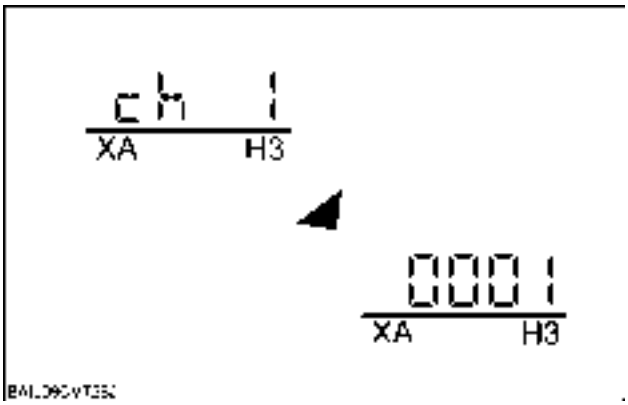

BAIL08CVT262 8

To save the desired option, depress and hold the navigation "up" or "down" key until the instrument cluster bleeps, indicating that the selection has been saved.

Depress the "menu" key to continue navigating through the "HH" menus.

Channel 2 - Trailer Brake Present

This channel is used to select whether trailer brakes are present or not.

Scroll through the available options using the navigation "up" or "down" key.

The options available are:

- 0001 - Trailer brakes present
- 0000- Trailer brakes not present

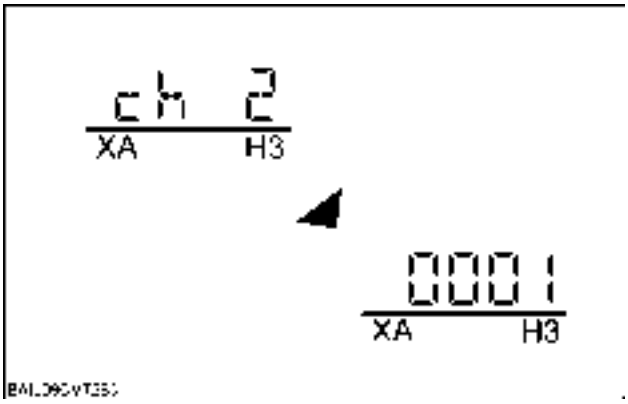

BAIL08CVT263 9

To save the desired option, depress and hold the navigation "up" or "down" key until the instrument cluster bleeps, indicating that the selection has been saved.

Depress the "menu" key to continue navigating through the "HH" menus.

https://tractormanualz.com/

H4 - VIEW SOFTWARE REVISION LEVEL

Common to all sub-systems.

H4 Menu Screen Select Diagram

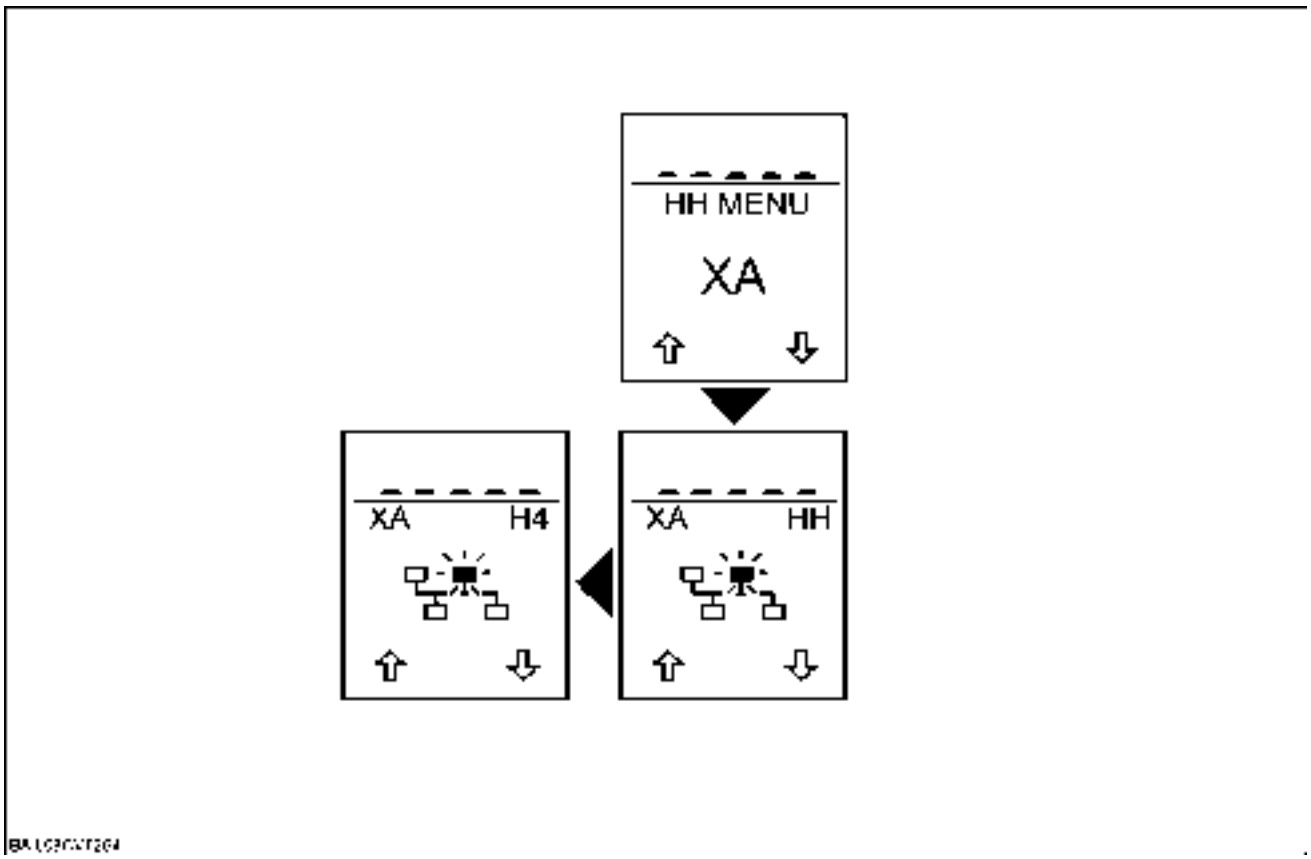

BAIL08CVT264 10

Select the H4 menu by depressing the "menu" key.

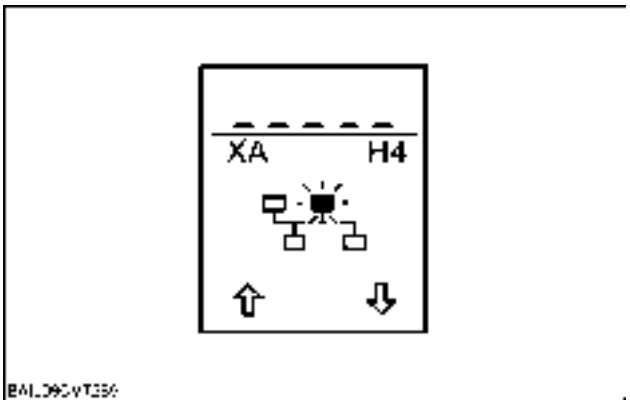

BAIL08CVT265 11

https://tractormanualz.com/

The upper section of the display will automatically cycle through the software release, as the example shown and return to allow navigation of the "HH" menus.

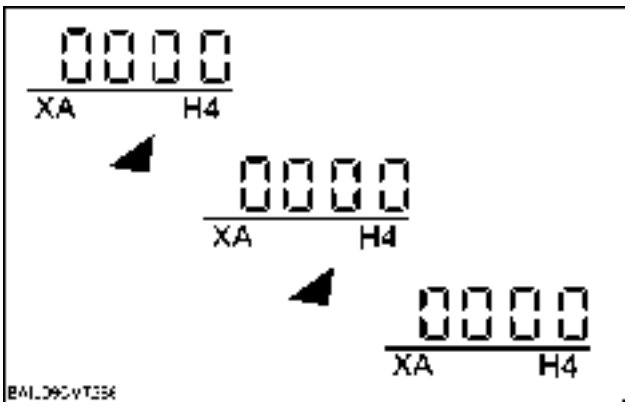

BAIL08CVT266 12

https://tractormanualz.com/

H5 - SWITCH OPERATION TEST

This menu displays a designated code when a switch transition is detected.
Common to all sub-systems.

H5 Menu Screen Select Diagram

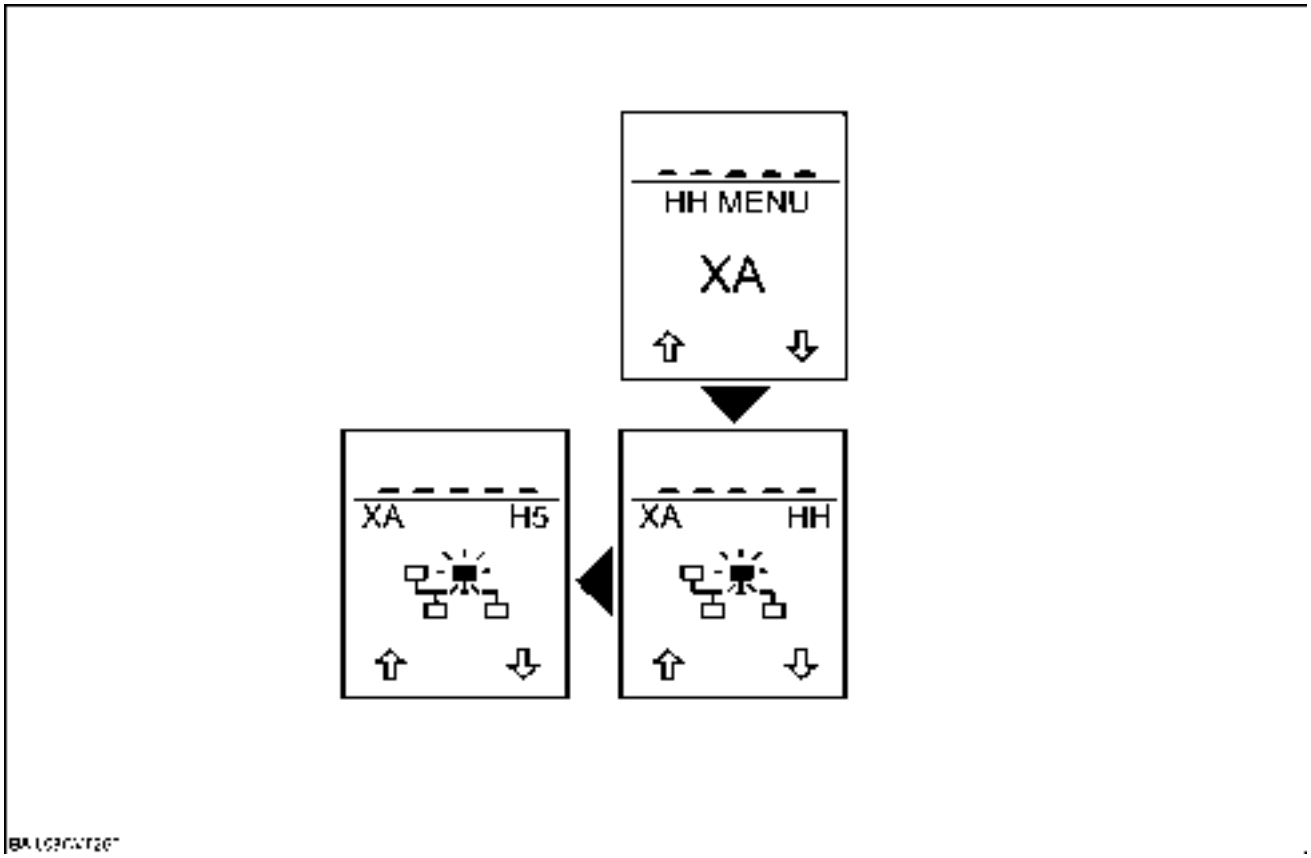

BAIL08CVT267 13

Select the H menu by depressing the "menu" key.

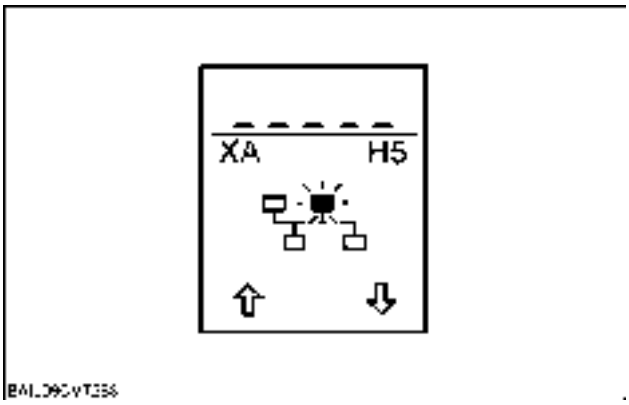

BAIL08CVT268 14

https://tractormanualz.com/

The upper section of the display will display "d_ _"

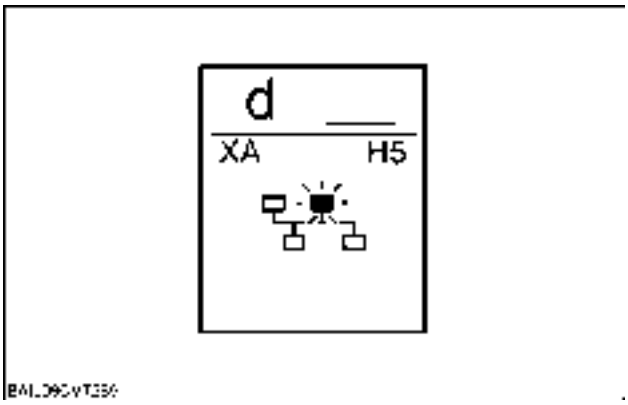

BAIL08CVT269 15

When a switch is operated, a code will be displayed and an audible tone should be heard to indicate the correct function.
If a switch code is not displayed and the audible tone not heard, a 'wiggle' test can be performed on the related wiring, while watching the display or listening for the audible tone, to help locate the fault.

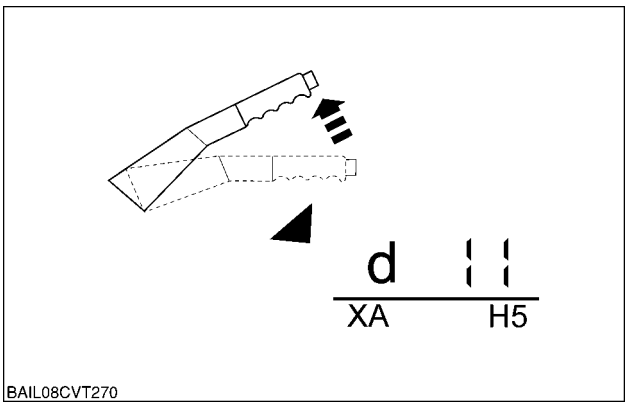

BAIL08CVT270 16

Identifier	Controller Pin number	Switch / Input
d0	No switch or two switches activated at the same time	
d8	B4	Cranking status
d11	B3	Handbrake switch
d28	C7	Shuttle lever park switch

https://tractormanualz.com/

H8 - CLEAR ELECTRICAL ERASABLE PROGRAMMABLE READ ONLY MEMORY (EEPROM)

This menu clears calibration values and stored error codes by resetting all EEPROM values back to default. EEPROM is where all calibration values and error codes are stored. This memory is retained even if there is no power to the controller, i.e. if the battery is disconnected.

NOTE: *H8 will not change the configuration settings. The H3 menu mode must be used for this.*

NOTE: *To erase only the stored error codes and not affect the calibration data use the HC menu mode.*

H8 Menu Screen Select Diagram

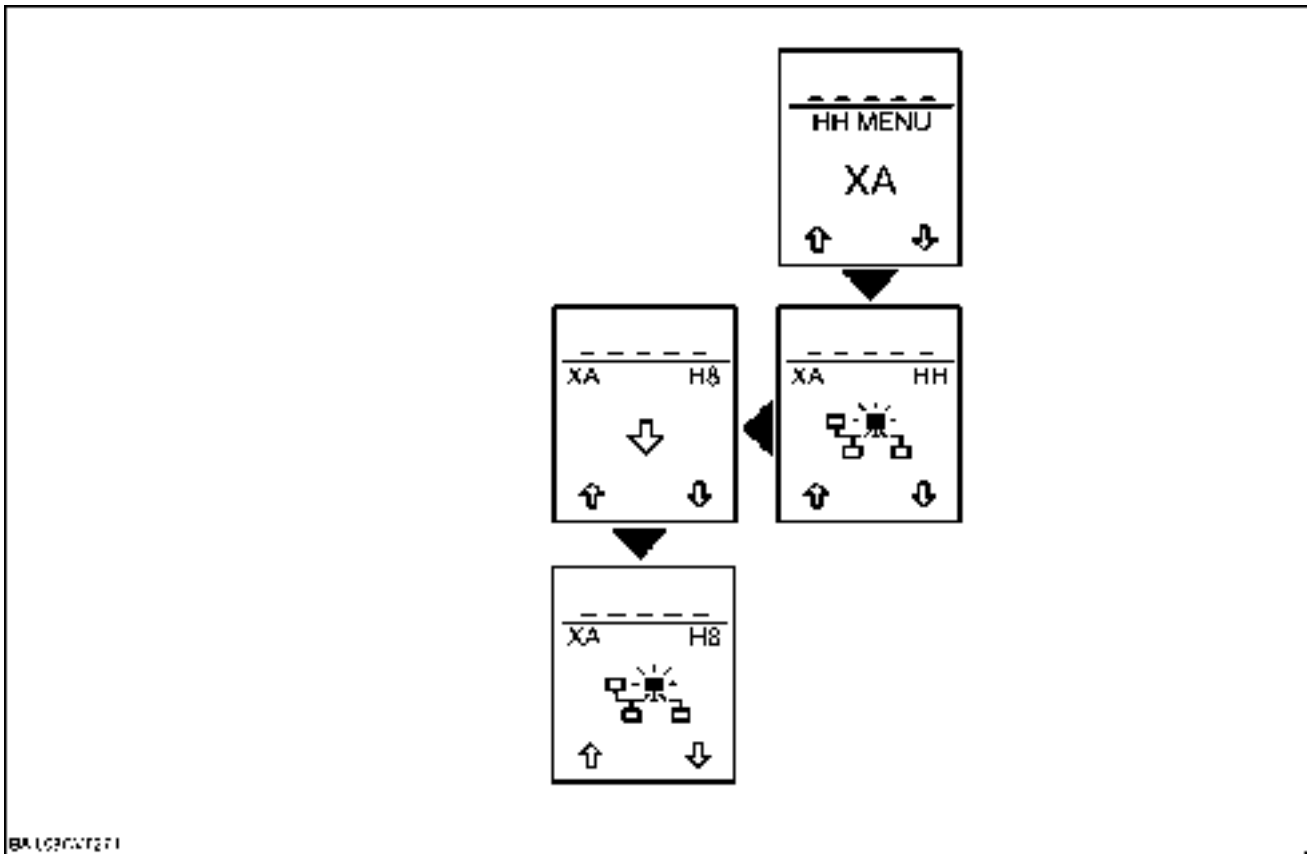

BAIL08CVT271 17

Press the "menu" button to accept the menu selection.

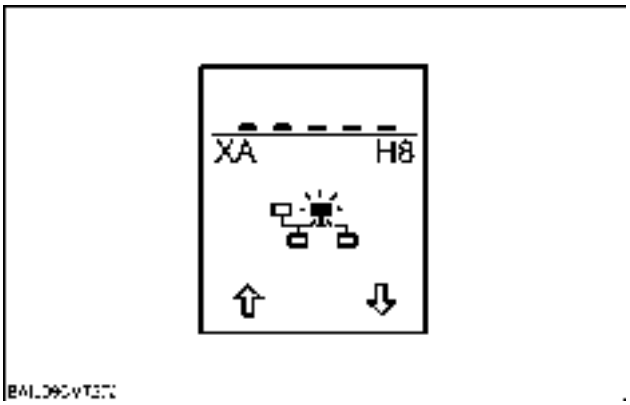

BAIL08CVT272 18

https://tractormanualz.com/

The upper section of the display will display "EECL".

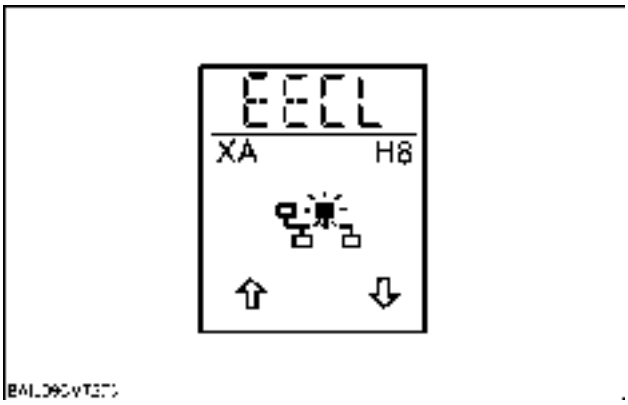

BAIL08CVT273 19

⚠ CAUTION ⚠

H8 will clear all calibrations values and stored error codes.

B006

Depress and hold the navigation "down" key to confirm the resetting of the EEPROM.
The upper section of the display will countdown from 5 to 1, then "EE" will be displayed to indicate the EEPROM has been cleared.

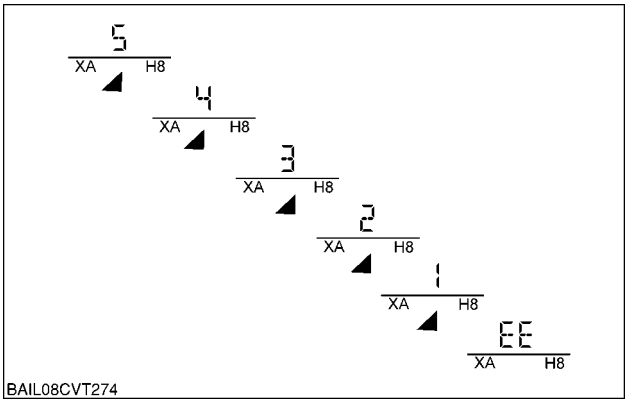

BAIL08CVT274 20

NOTE: *If the "down" key is released before the countdown finishes, the procedure will be aborted.*

Turn the keystart OFF.

https://tractormanualz.com/

H9 - VOLTMETER

This menu is used to verify the operation of various potentiometers, voltage supplies, and solenoid current circuits. If an intermittent fault is detected within a circuit, a 'wiggle' test can be performed on the related wiring while watching the display for sudden changes in values, to help locate the area where the fault exists.

NOTE: *The vehicle may be driven while in this menu.*

Common to all sub-systems.

H9 Menu Screen Select Diagram

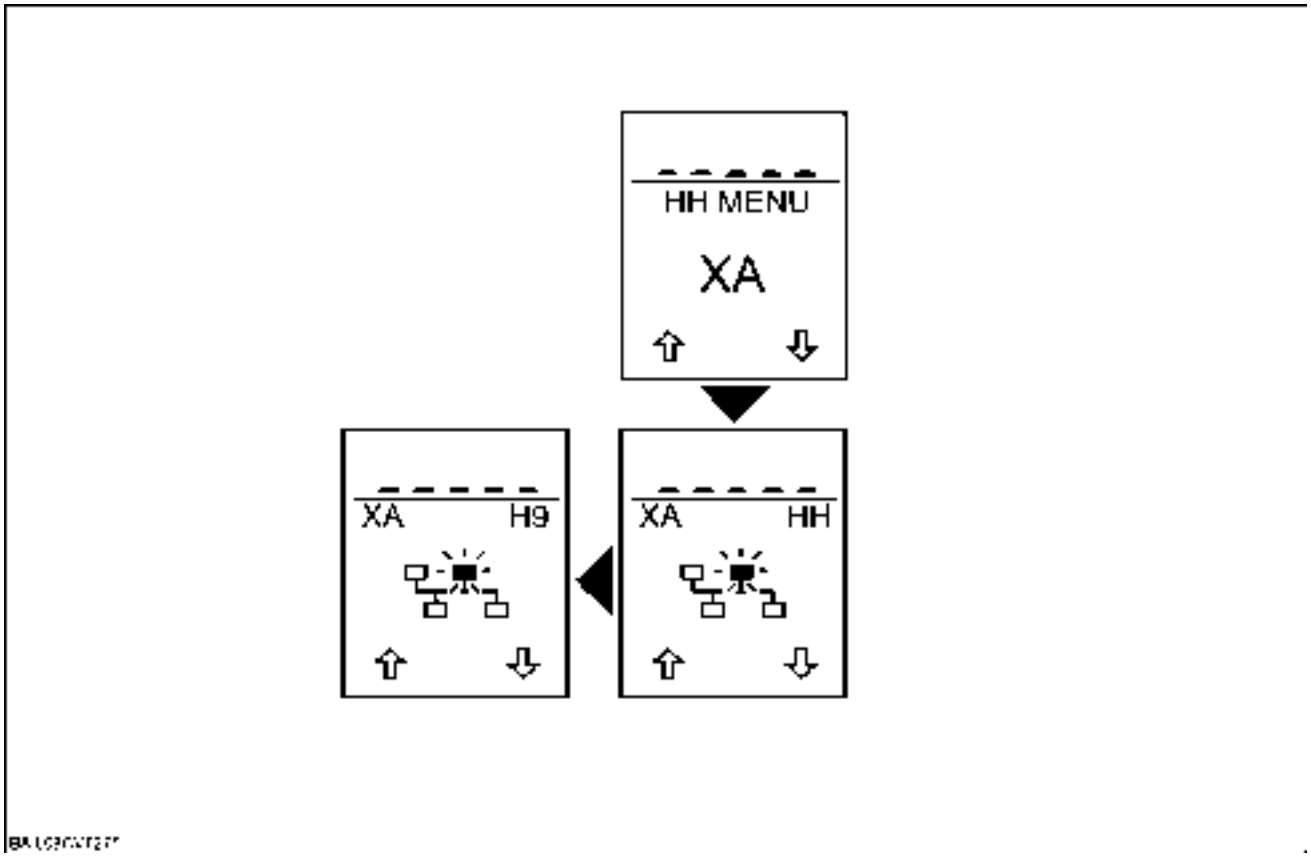

BAIL08CVT275 21

Select the H9 menu by depressing the "menu" key.

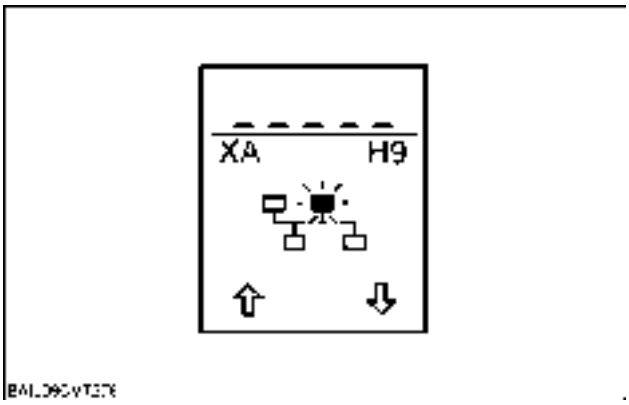

BAIL08CVT276 22

https://tractormanualz.com/

The upper section of the display will display "ch - -"

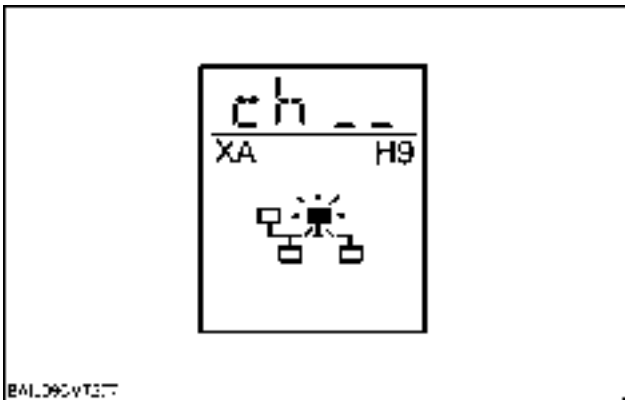

BAIL08CVT277 23

The required channel can be selected by using the navigation "up" and "down" keys.
After a delay the value will be displayed. Compare the value displayed with the typical reading shown in the table below.

NOTE: *The value is the input voltage or signal into the controller. This cannot be directly translated into a voltage due to the internal processes of the controller. A zero equates to* ***0 volts****.*

If the value displayed varies by more than **10 %** to that shown in the table below, a fault is indicated in either the component or the wiring harness relevant to that channel.

NOTE: *Check the connectors of the effected circuit, including the controller connectors, prior to replacing any components.*

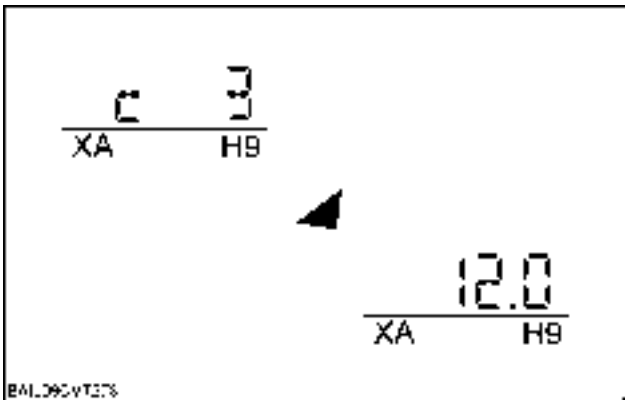

BAIL08CVT278 24

Channel	Description	Typical Reading
1	ASNS_AI_1 input	0 to 5V
2	Shuttle lever park switch	0 to 5V
3	Battery voltage	2.7 to 14.8V
4	Ignition switch voltage	0 to 14.8V
5	Accelerometer	-1.5 to 1.5g
6	Temperature	**-40 °C** to **120 °C**

https://tractormanualz.com/

HB - DISPLAY STORED FAULT CODES

This menu is used to display fault codes which are stored in the EEPROM of the controller. Common to all sub-systems.

HB Menu Screen Select Diagram

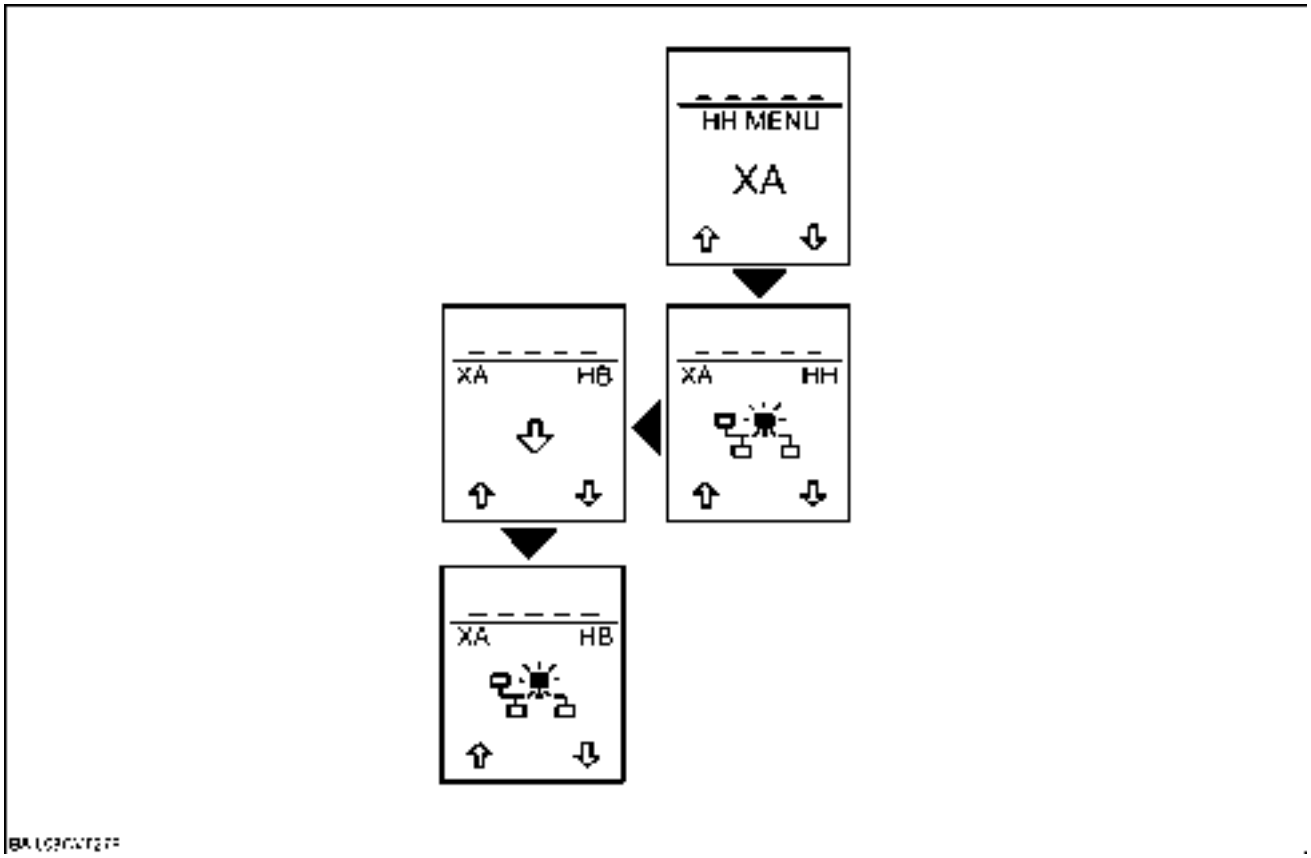

BAIL08CVT279 25

Select the HB menu by depressing the "menu" key.

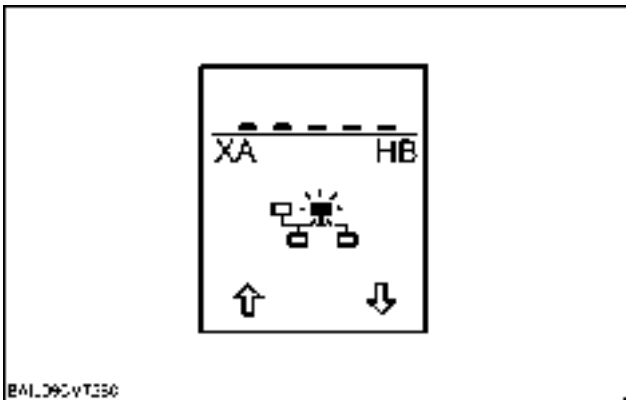

BAIL08CVT280 26

https://tractormanualz.com/

The upper section of the display will display "- - - -", if no fault is stored in the selected sub-system.

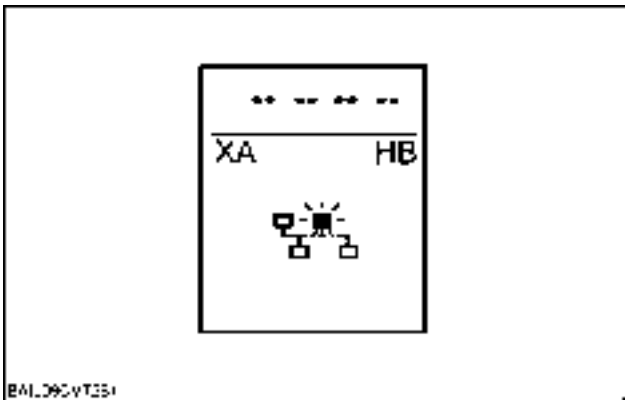

BAIL08CVT281 27

The upper section of the display will display "F", if a fault code is stored in the selected sub-system.
The upper section of the display will then automatically cycle through as the example:

12043 Fault code
00 Hour of first occurrence
49 Hour of last occurrence
54 Number of occurrences of the fault

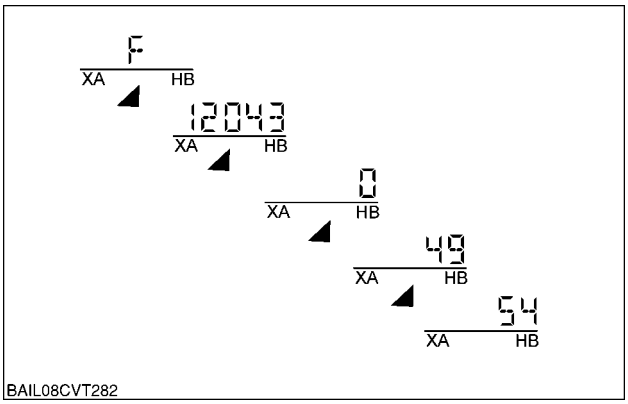

BAIL08CVT282 28

Depress the navigation "up" or "down" key to change to the next fault code in the list.
The upper section of the display will display "_ _ _" at the end of the list.
Depress the "menu" key to continue navigating through the "HH" menus.

https://tractormanualz.com/

HC - CLEAR STORED FAULT CODES

HC Menu Screen Select Diagram

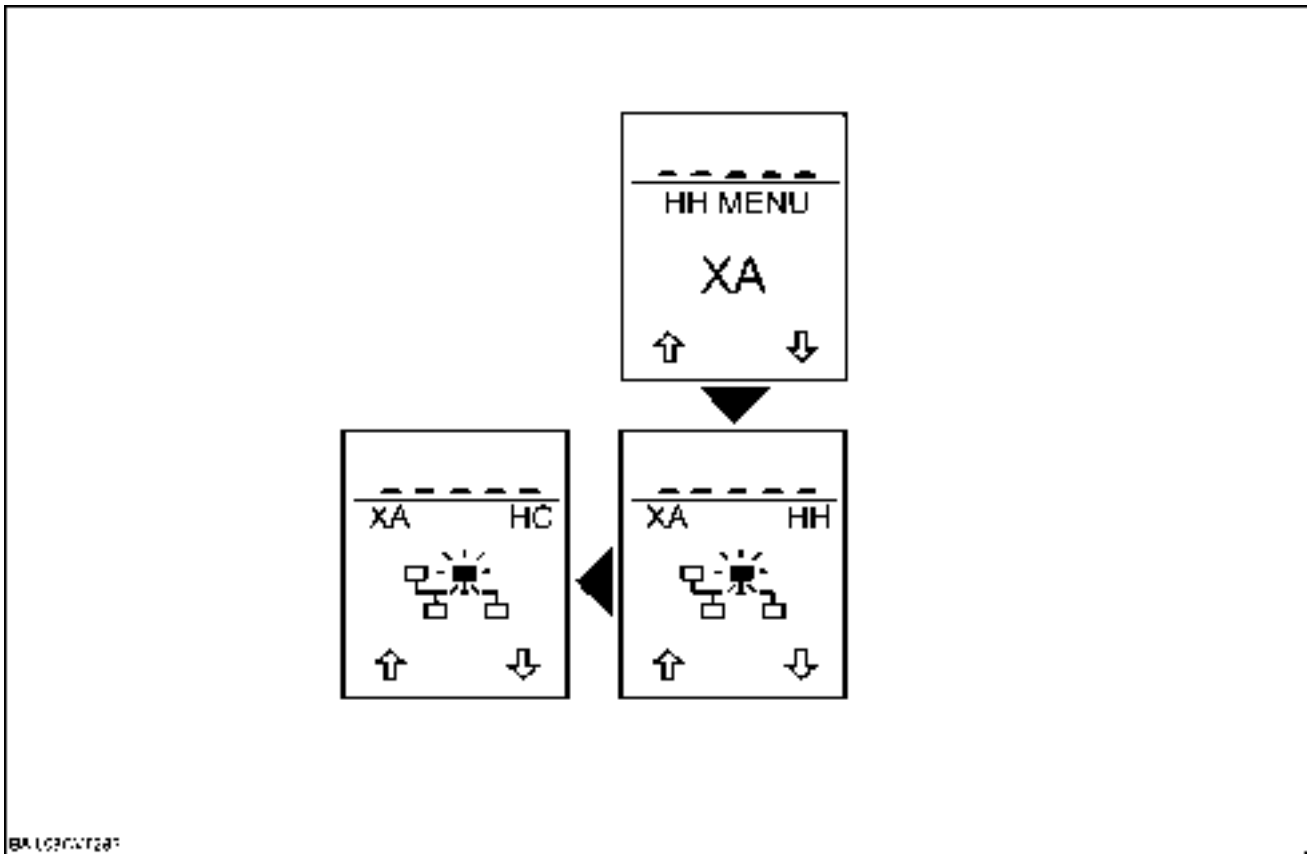

BAIL08CVT283 29

NOTE: *Always make a note of the fault codes stored, before clearing.*

Select the HC menu by depressing the "menu" key.

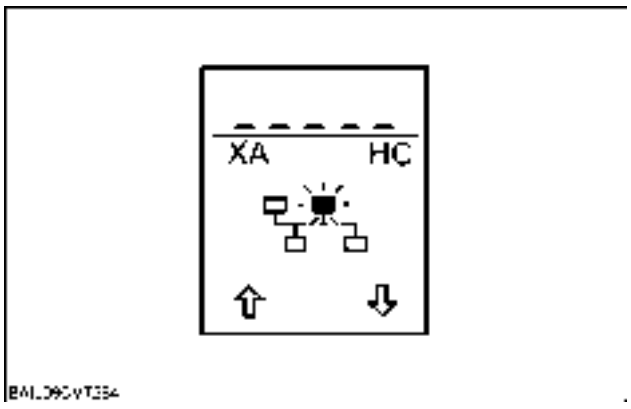

BAIL08CVT284 30

https://tractormanualz.com/

The upper section of the display will display "F CL".

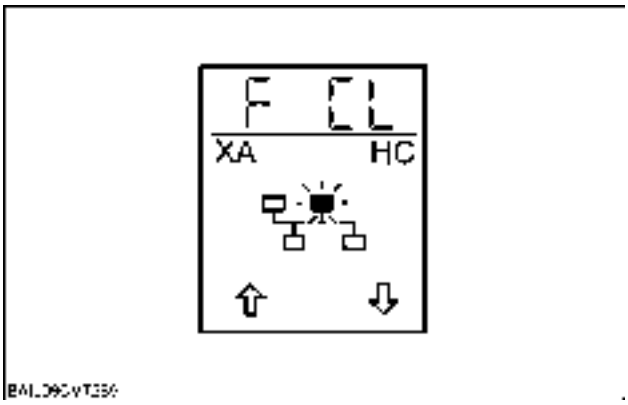

BAIL08CVT285 31

NOTE: *f the navigation "down" key is released before the countdown finishes, the procedure will be aborted.*

Depress and hold the navigation "down" key to confirm the clearing of the memory.

NOTE: *The upper section of the display will countdown from 05 to 01, then "EE" will be displayed to indicate the fault codes have been cleared.*

Depress the "menu" key to continue navigating through the "HH" menus.

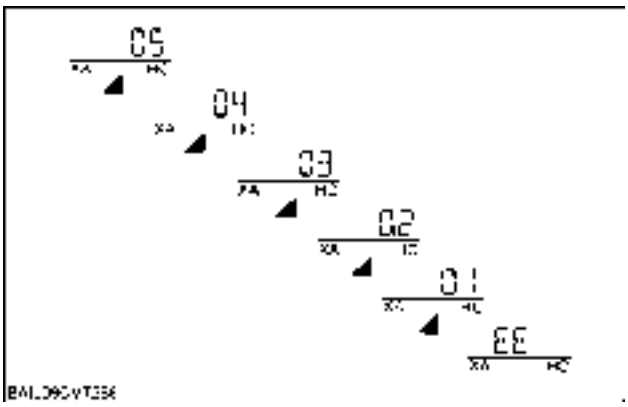

BAIL08CVT286 32

https://tractormanualz.com/

HF - VIEW CONTROLLER HARDWARE INFORMATION

This menu allows the hardware identification, hardware version and serial number to be displayed. Common to all sub-systems.

HF Menu Screen Select Diagram

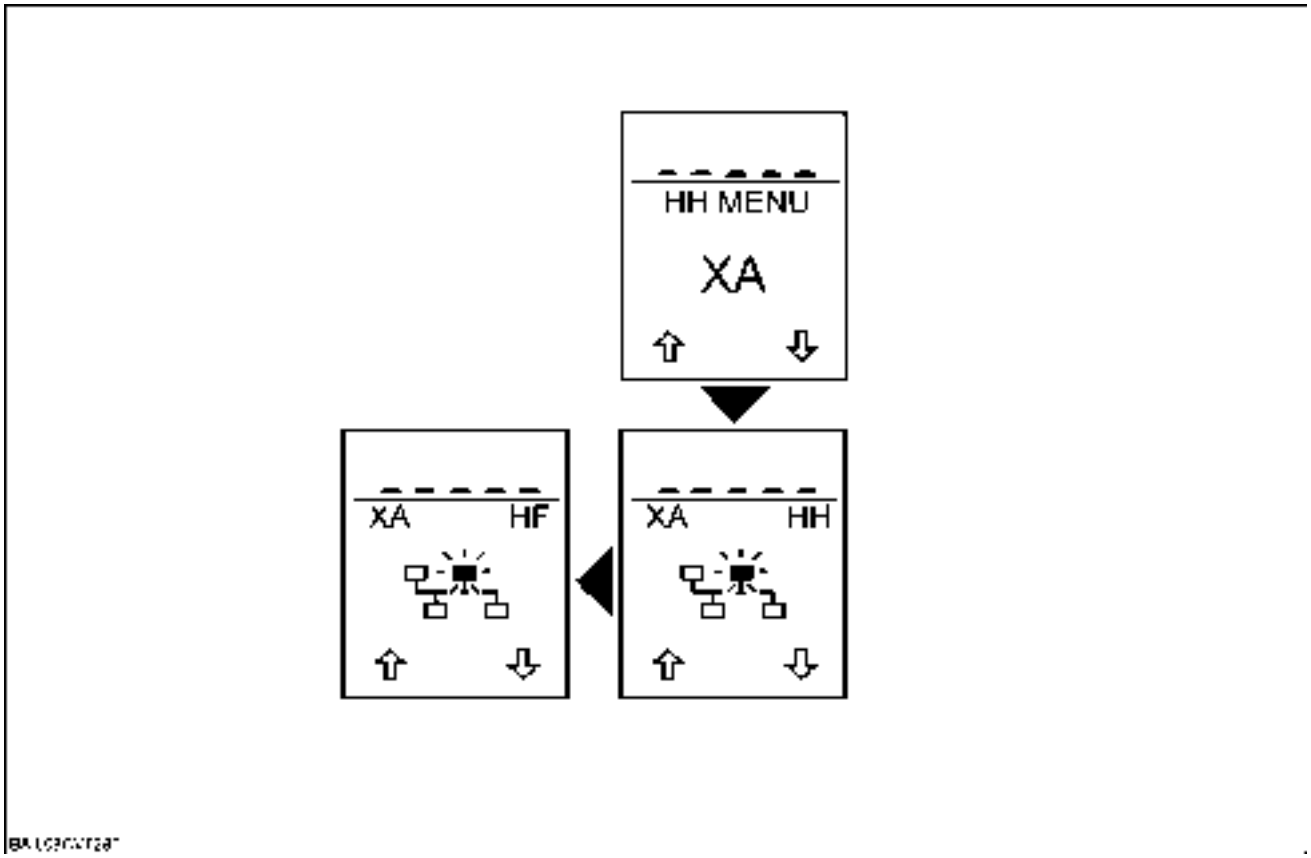

BAIL08CVT287 33

Select the HF menu by depressing the "menu" key.

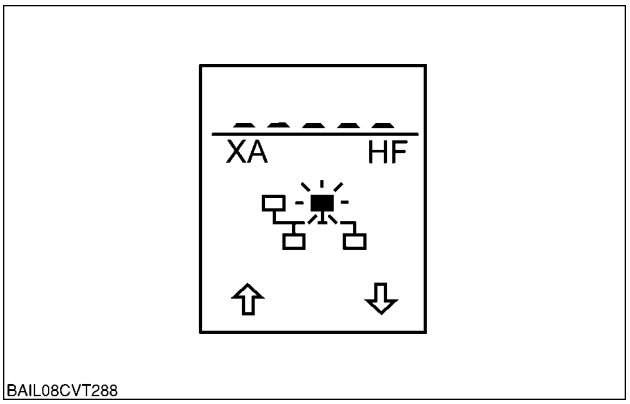

BAIL08CVT288 34

https://tractormanualz.com/

The upper section of the display will automatically cycle through as the example:

559 Hardware identification
0300 Hardware version
0000 Hardware version
0000 Serial number
2000 Serial number
4752 Serial number
and return to allow navigation of the "HH" menus.

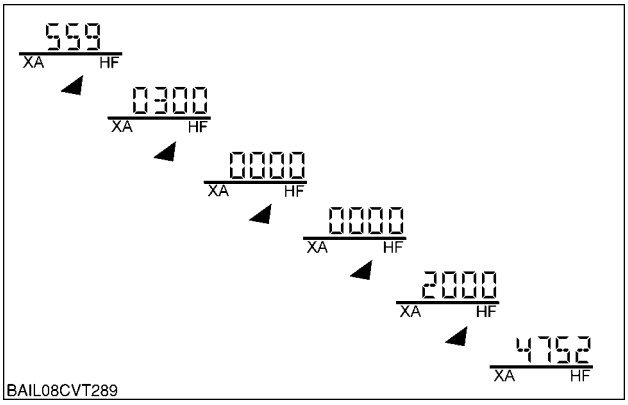

BAIL08CVT289 35

https://tractormanualz.com/

Control module - Electronic schema Instrument Cluster - ICU3 Module IE

Component Identification

1. BATTERY ISOLATOR
2. INSTRUMENT CLUSTER ASSEMBLY
3. INDICATOR FLASHER UNIT
4. HANDBRAKE SWITCH
5. ALTERNATOR
6. ENHANCED KEYPAD
7. SENSOR SIGNAL GROUND
8. CHASSIS GROUND
9. POWER GROUND
10. BRAKE PEDAL SWITCHES AND TRAILER BRAKE RELAYS
11. IMPLEMENT CONNECTOR
12. WORKLAMP CONTROLLER
13. GET-U-HOME LIGHTS RELAY

https://tractormanualz.com/

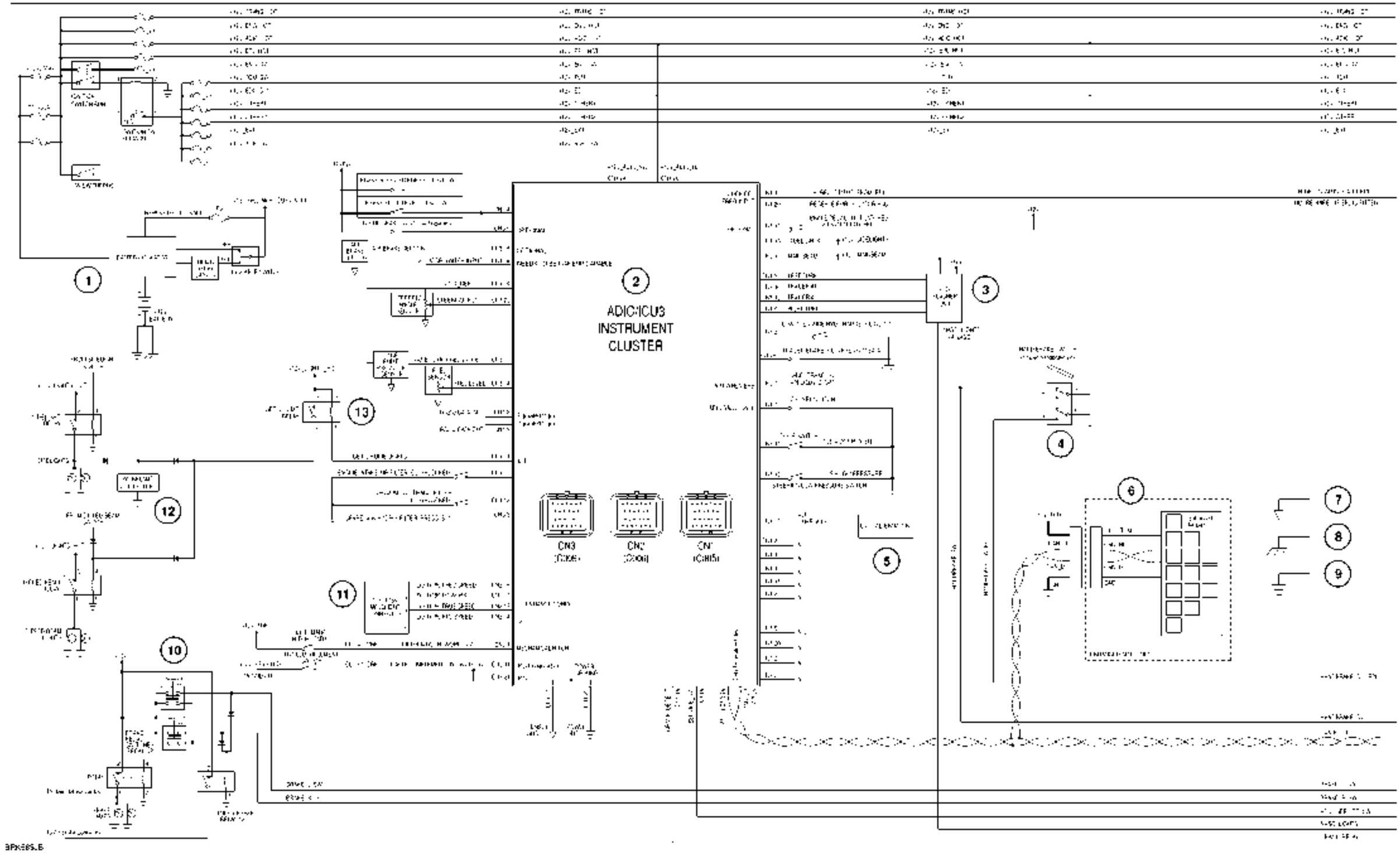

https://tractormanualz.com/

Control module - Electronic schema Electronic Park Lock (EPL) - Module XA

Component Identification	
1. EPL unit (Module and motor assembly)	
2. EPL Motor	
3. EPL Module	
4. Trailer Brake Relay	
5. Sensor Signal Ground	
6. Chassis Ground	
7. Power Ground	

https://tractormanualz.com/

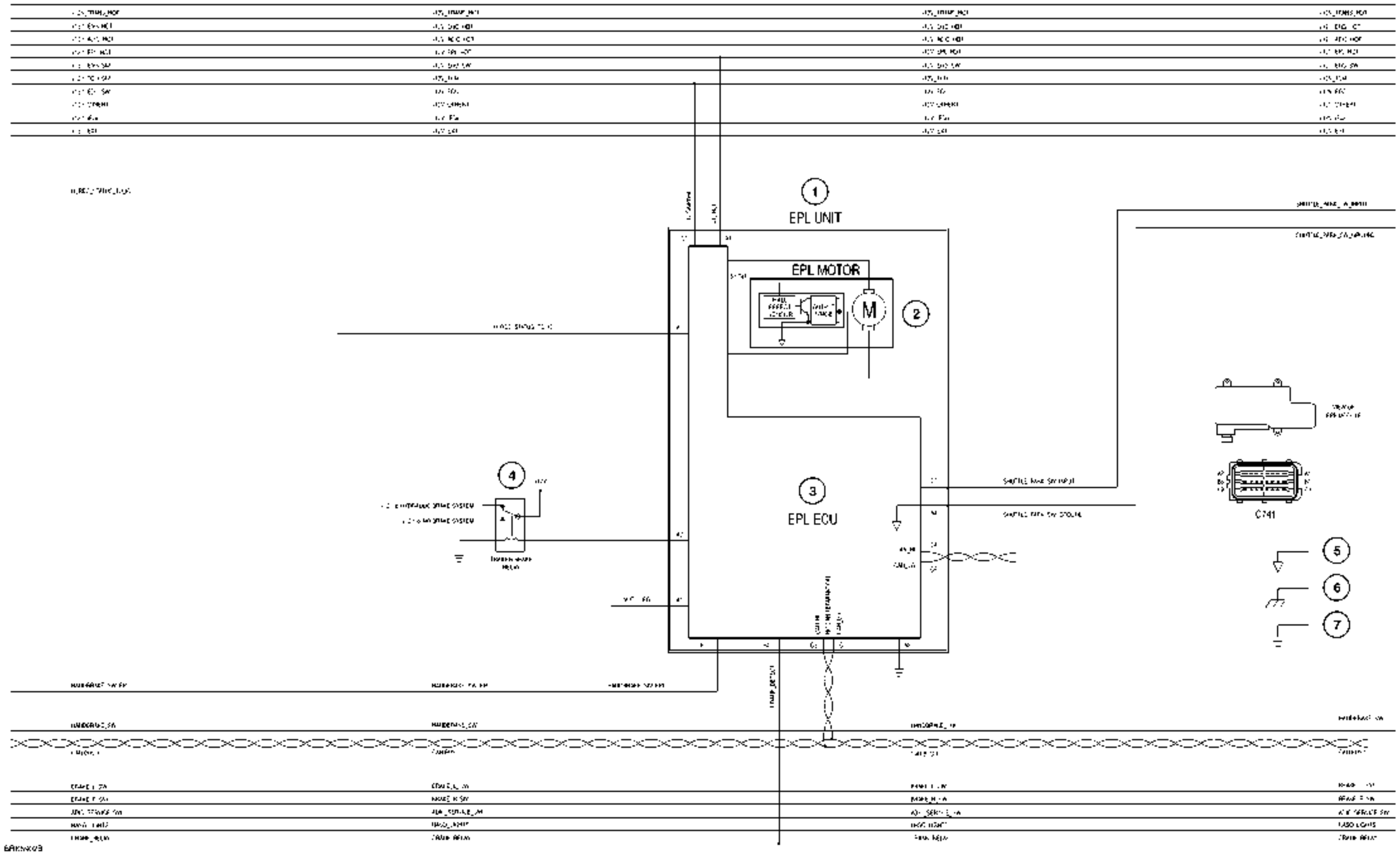

13_BRK5902B 1

https://tractormanualz.com/

Control module - Electronic schema Central Control Unit (RE module)

Component Identification	
1. Electronic Draft Control	
2. CVT Transmission control	
3. Hydraulic Master switch	
4. PTO (rear) Control	
5. Electronically Shiftable Power Take Off	
6. Four wheel drive / Differential lock control	
7. Sensor Ground	
8. Chassis Ground	
9. Power Ground	

https://tractormanualz.com/

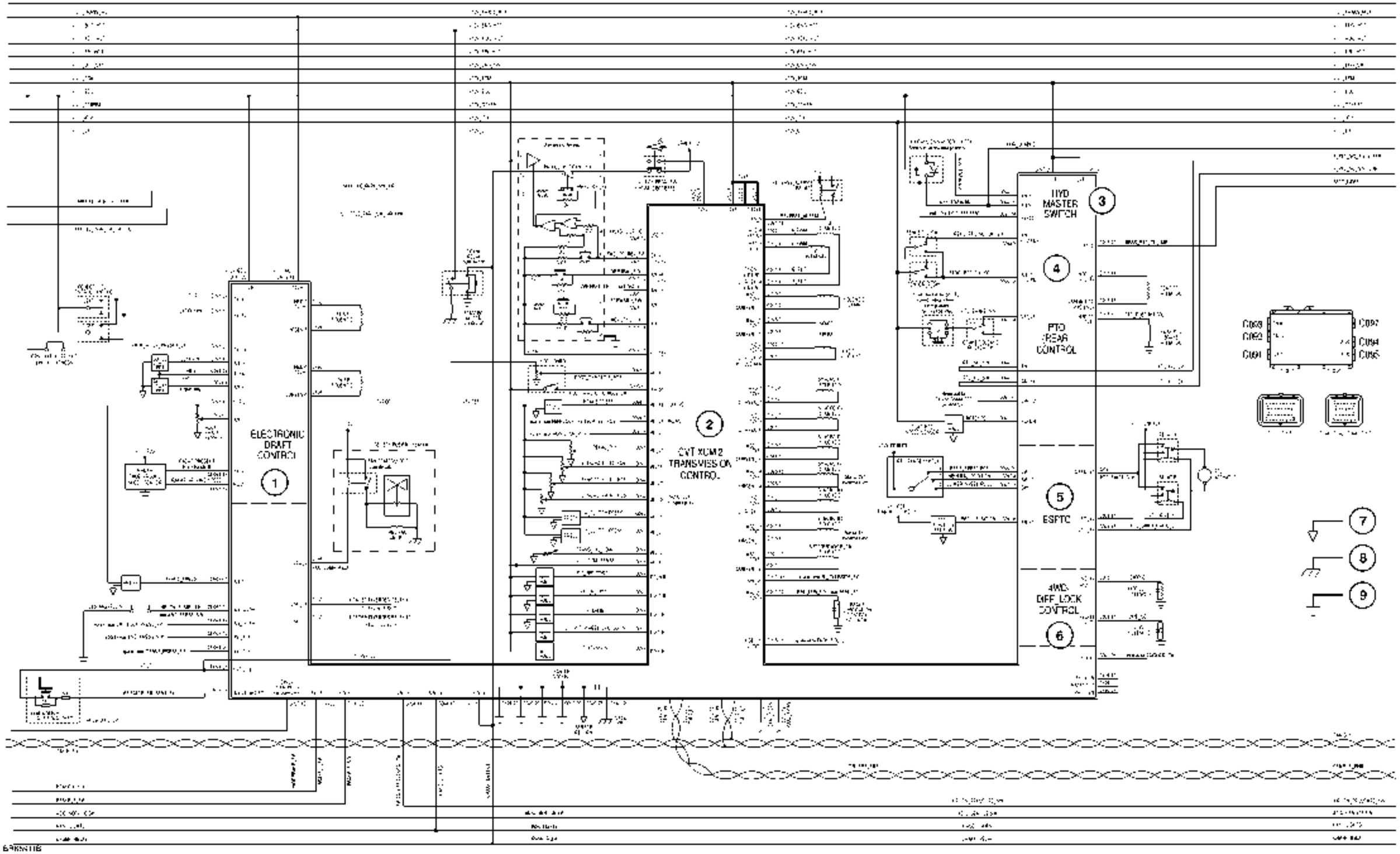

12_BRK5911B 1

https://tractormanualz.com/

Control module - Electronic schema Auxiliary Control Unit (RM module)

Component Identification	
1. Electro-Hydraulic Remotes (EHR's)	
2. Front Axle Suspension Control	
3. PTO (front) Control	
4. Top Link Lift Rod Control	
5. Front Hydraulic Power Lift (HPL) Control	
6. Sensor Signal Ground	
7. Chassis Ground	
8. Power Ground	

https://tractormanualz.com/

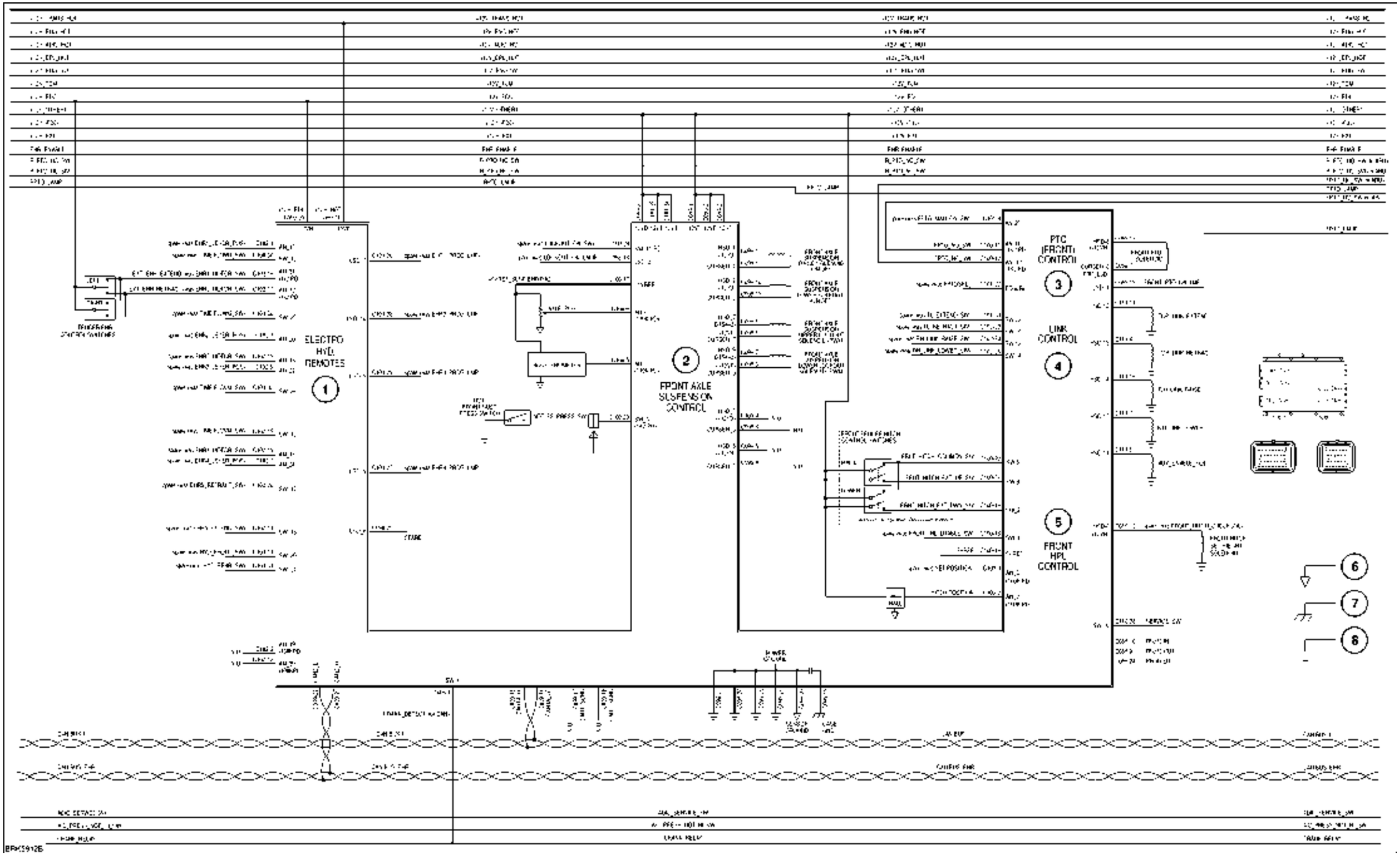

11_BRK5912B 1

https://tractormanualz.com/

Control module - Electronic schema Arm Rest Control Unit (LC module)

Component Identification	
1. Arm Rest Control Unit	
2. Speed / Engine RPM Control	
3. Hitch Control (Integrated Control Panel)	
4. Hitch Settings	
5. Electronic Draft Control and Electronic Front Hitch Settings Panel	
6. Electro Hydraulic Remotes Control	
7. Engine Control	
8. Multi Function Handle controller	
9. Rear PTO and Front PTO Lamps	
10. Rear PTO Switch	
11. Front PTO Switch	
12. Sensor Ground	
13. Chassis Ground	
14. Power Ground	

https://tractormanualz.com/

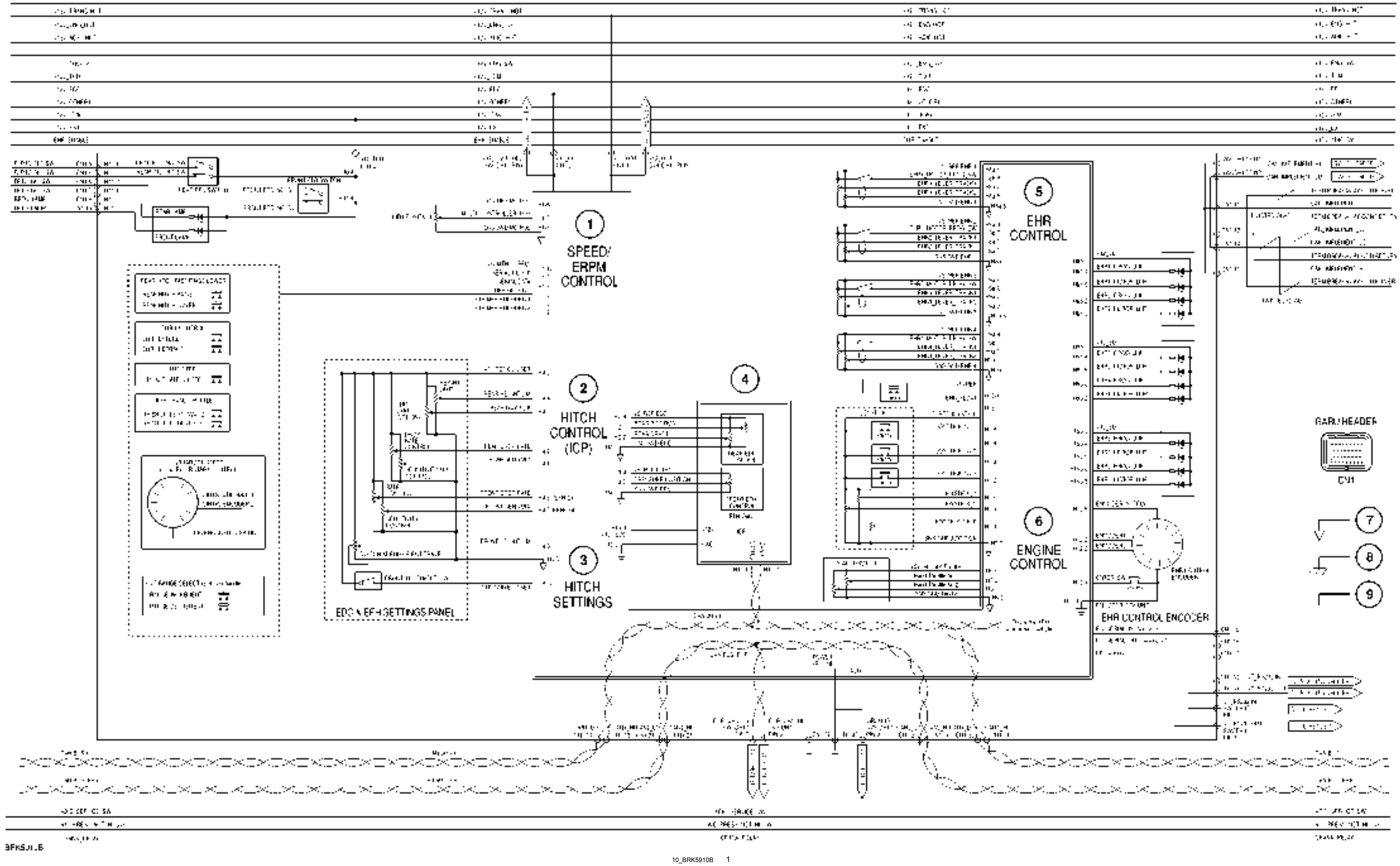

10_BRK5910B 1

https://tractormanualz.com/

Control module - Electronic schema Small Wide Colour Display

Component Identification	
1. Small Wide Colour Display (SWCD screen)	
2. USB Socket	
3. Sensor Ground	
4. Chassis Ground	
5. Power Ground	
6. ISO BUS implement Connector	

https://tractormanualz.com/

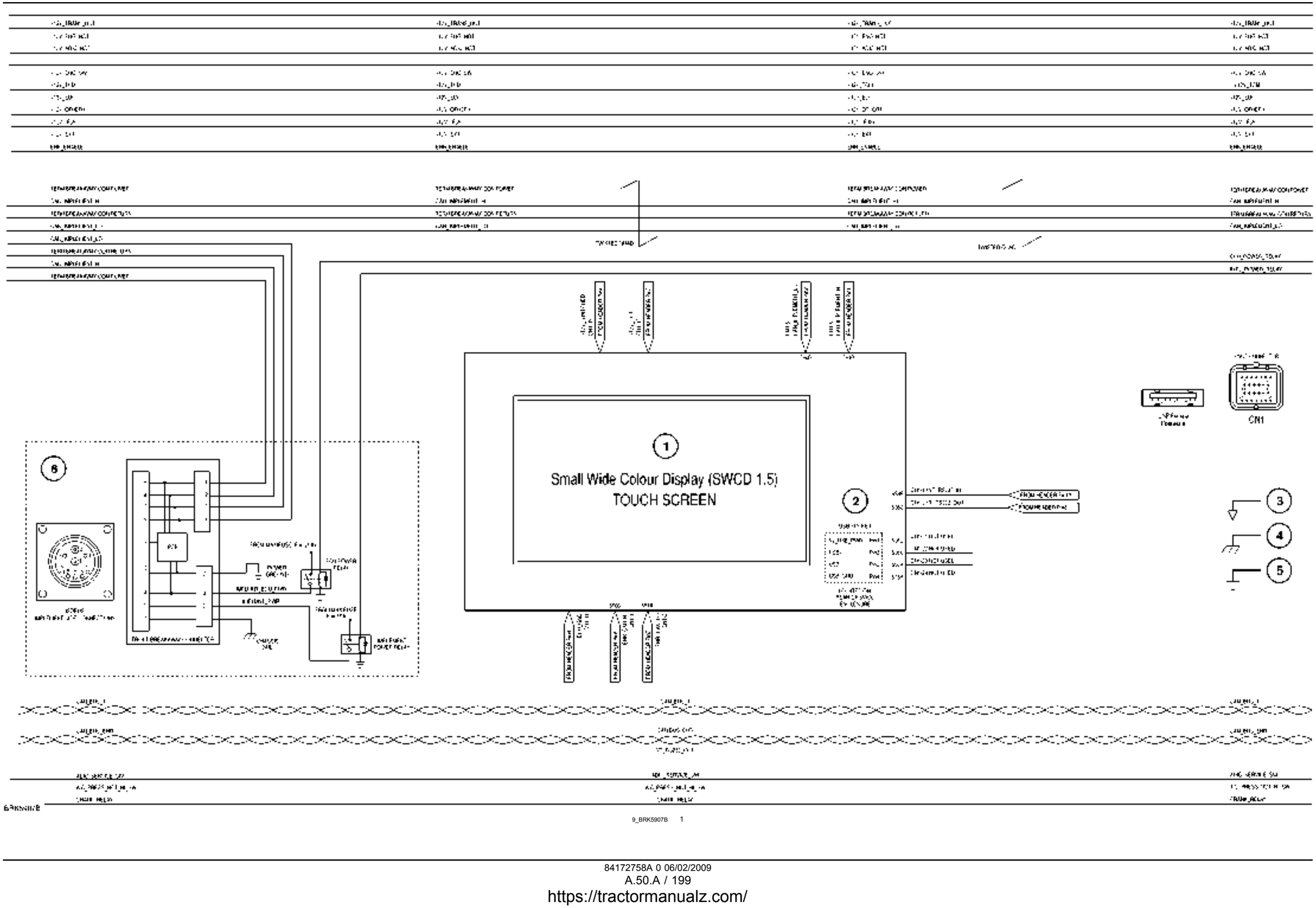

https://tractormanualz.com/

Control module - Electronic schema Radio and Hands Free module

Component designation	
1. Hands Free Module	
2. Phone Button	
3. Voice Button	
4. Radio	
5. Speakers	
6. Sensor Ground	
7. Chassis Ground	
8. Power Ground	
9. Microphone	

https://tractormanualz.com/

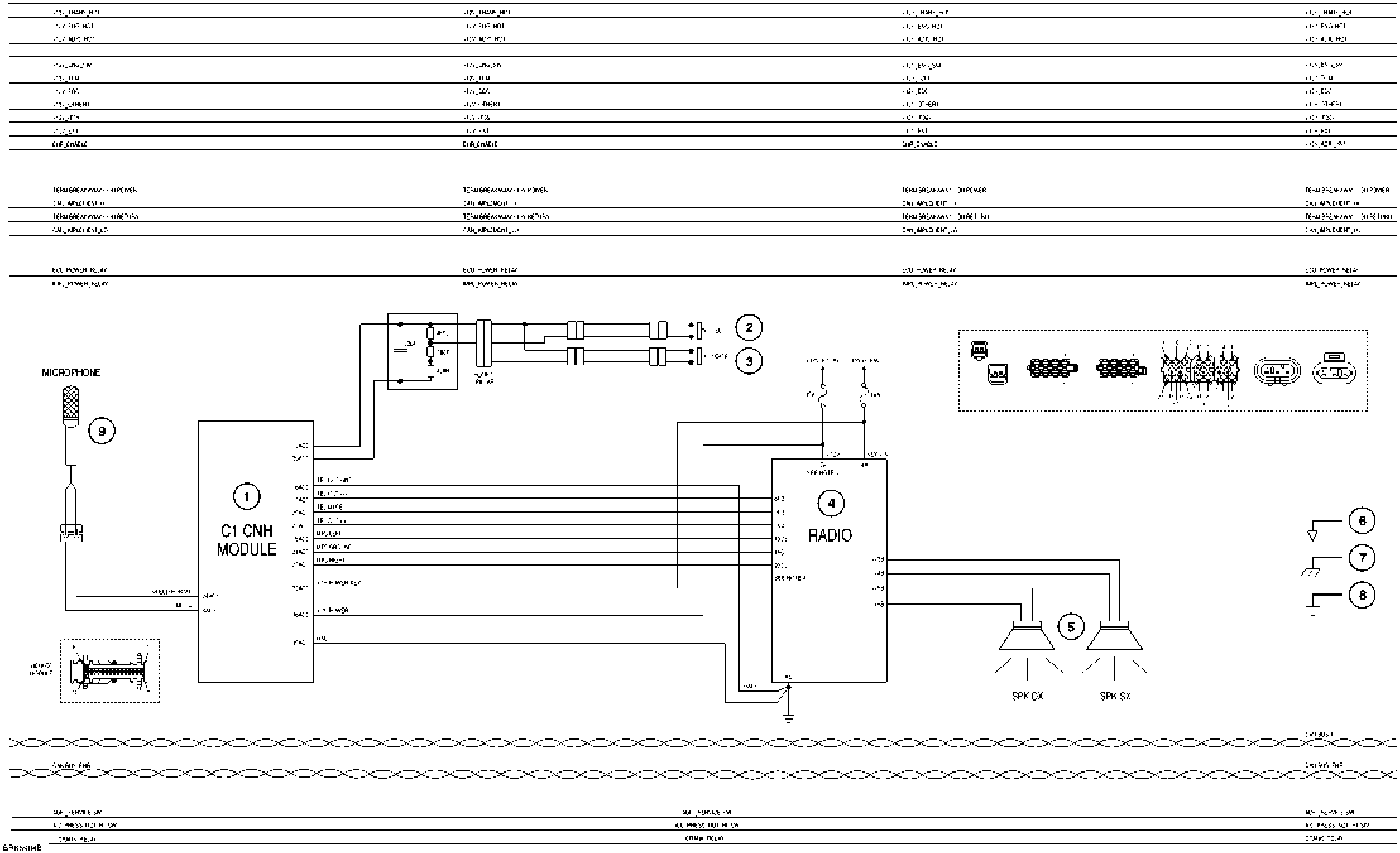

7_BRK5908B 1

Control module - Electronic schema Tractor Electronic Control Unit (TECU)

Component designation	
1. TECU Module	
2. ISO BUS implement connector	
3. Sensor ground	
4. Chassis ground	
5. Supply ground	

https://tractormanualz.com/

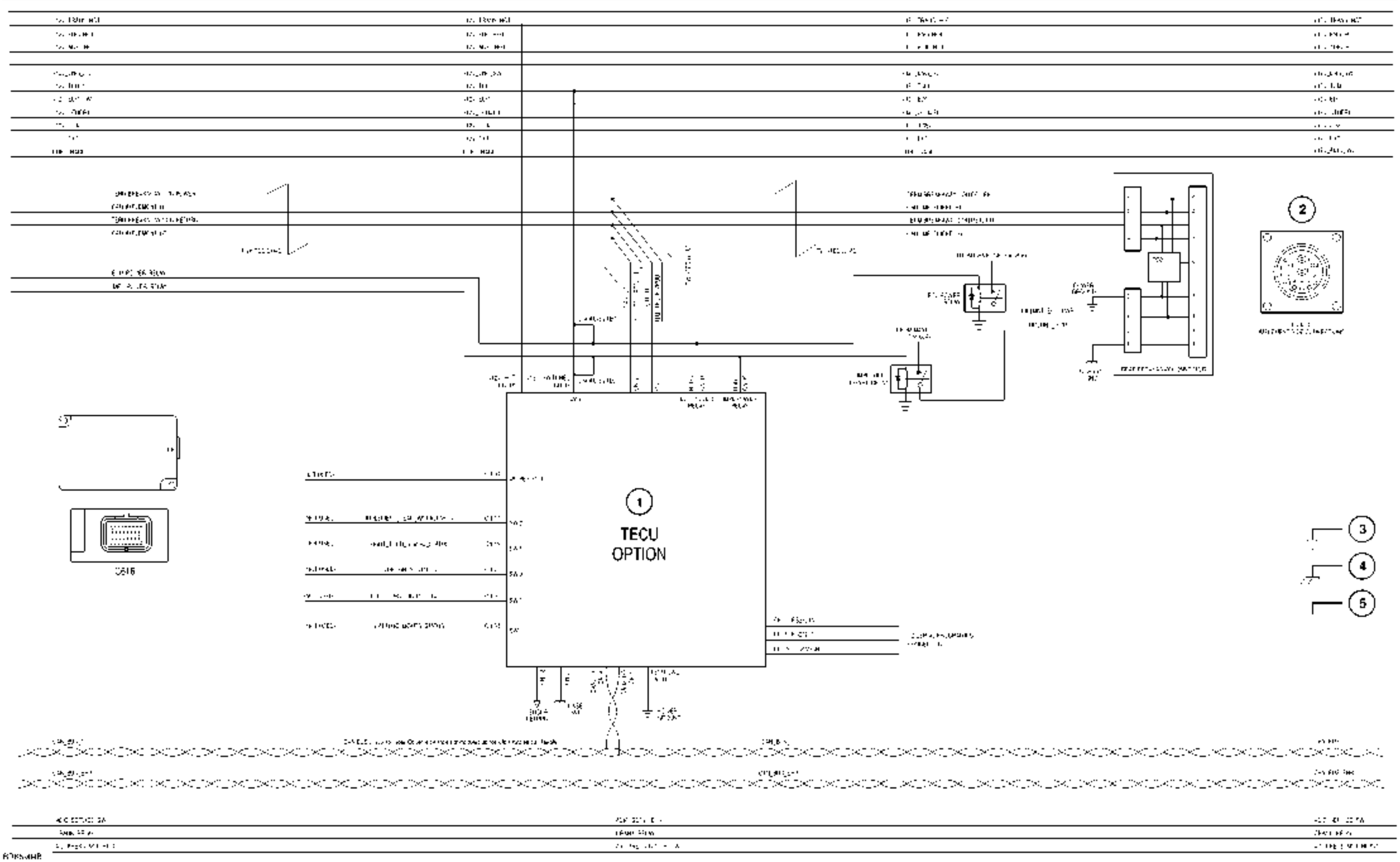

6_BRK5904B 1

https://tractormanualz.com/

Control module - Electronic schema Automatic Temperature Control

Component designation	
1. Climate control module	
2. Power Relay	
3. Blower speed switch	
4. Air conditioning switch	
5. Temperature transmitter	
6. High pressure switch	
7. Low pressure switch	
8. Evaporator temperature sensor	
9. Outlet temperature sensor	
10. Cab temperature sensor	
11. Outside temperature sensor	
12. A/C compressor clutch relay	
13. Compressor	
14. Blower speed control	
15. Blower motor	
16. Water valve	
17. Sensor Ground	
18. Chassis Ground	
19. Power Ground	

https://tractormanualz.com/

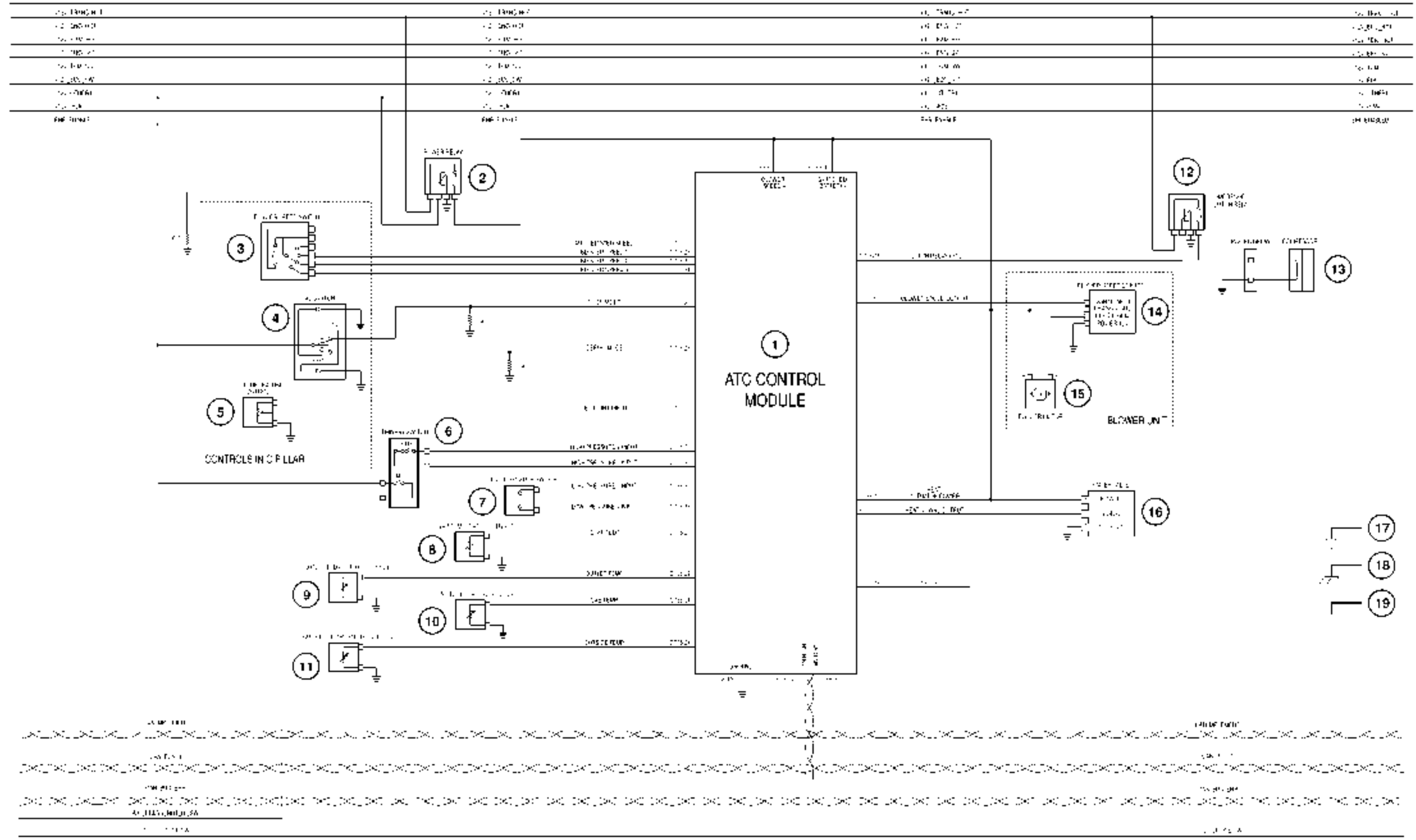

5_BRK5909C 1

https://tractormanualz.com/

Control module - Electronic schema Fast Steer (KA Module)

Component designation	
1. Turn Assist electronic control unit	
2. Steering wheel monitor proximity switch	
3. Turn Assist ON/OFF switch	
4. LVDT sensor (position transmitter)	
5. Hydraulics solenoid valve	
6. Sensor signal ground	
7. Chassis ground	
8. Supply ground	

https://tractormanualz.com/

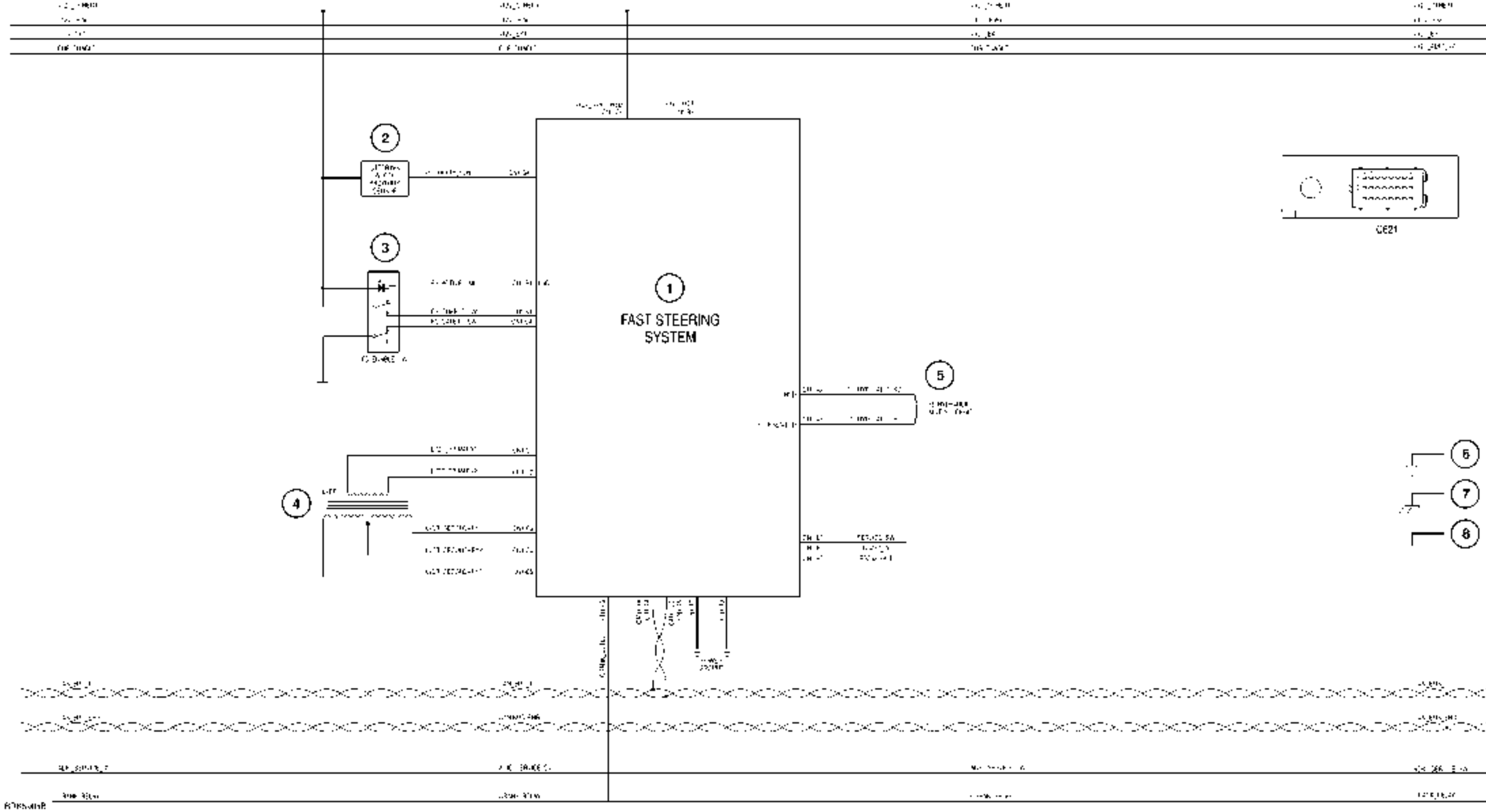

4_BRK5905B 1

https://tractormanualz.com/

Control module - Electronic schema Engine control Module (EDC 16)

Component designation	
1. Engine control module(EDC 16)	
2. Diagnostics plug - CAN 1	
3. Diagnostics plug CAN 2	
4. Main relay	
5. Fuel filter water sensor	
6. EBR (Exhaust Brake) actuator	
7. Fuel filter heater relay	
8. Heating element relay	
9. Vistronic fan	
10. Boost pressure / boost temperature sensor	
11. Oil pressure / oil temperature sensor	
12. Rail pressure sensor	
13. Coolant temperature sensor	
14. Fuel temperature sensor	
15. Camshaft speed sensor	
16. Crankshaft speed sensor	
17. High pressure pump	
18. Injector, No. 1 cylinder	
19. Injector, No. 2 cylinder	
20. Injector, No. 3 cylinder	
21. Injector, No. 4 cylinder	
22. Injector, No. 5 cylinder	
23. Injector, No. 6 cylinder	
24. Sensors ground	
25. Chassis ground	
26. Supply ground	

https://tractormanualz.com/

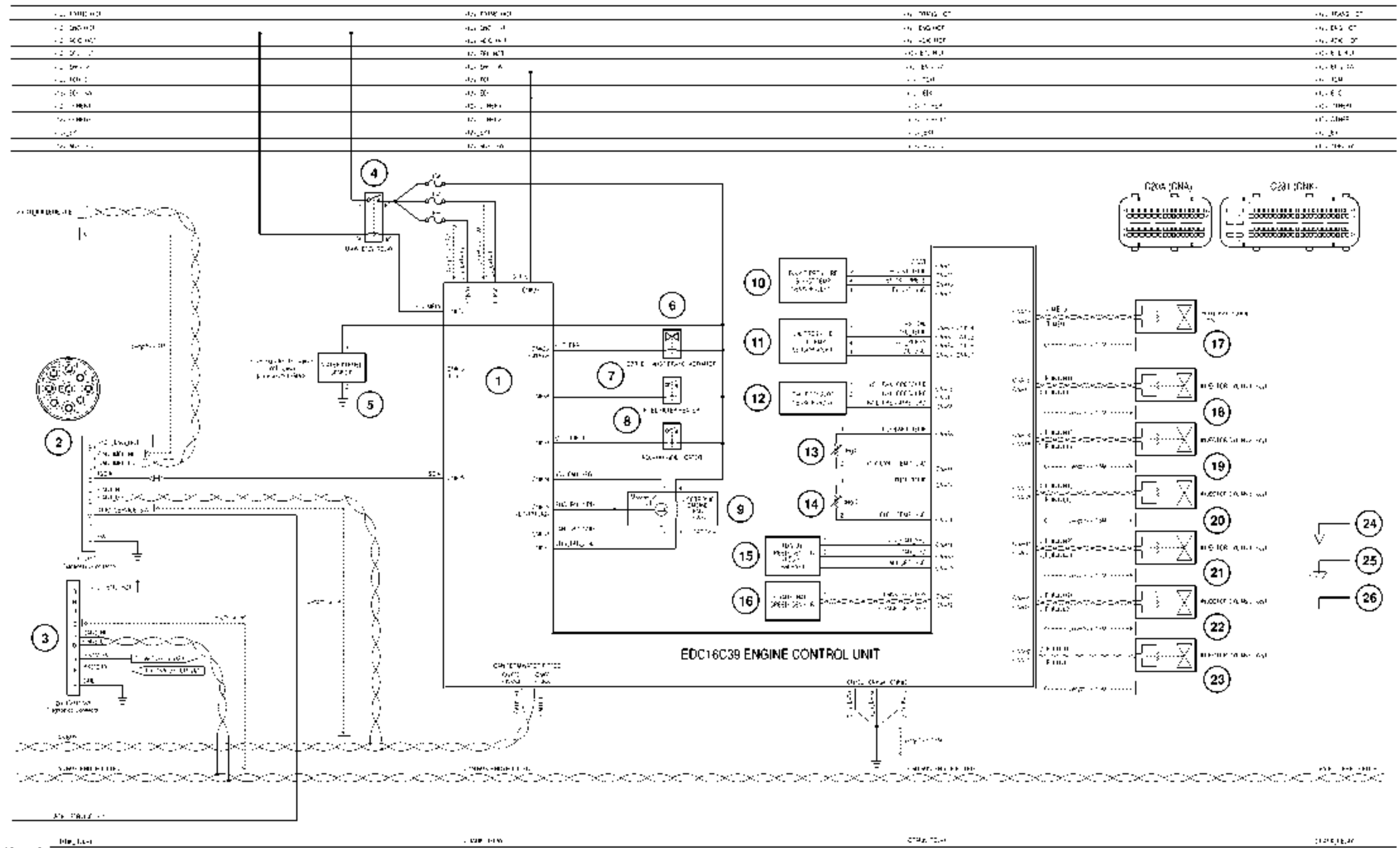

3_BRK5901B 1

https://tractormanualz.com/

Control module - Electronic schema Auto Guidance Module

Component designation	
1. Autoguidance module	
2. Crank Relay	
3. Manual override pressure sensor	
4. Steering angle sensor	
5. Diagnostic connector	
6. GPS (global positioning system) receiver	
7. Select switch (A=non GARU, B=with GARU	
8. Steering solenoids	
9. Switch type A	
10. Switch type B	
11. Sensor ground	
12. Chassis Ground	
13. Power Ground	

https://tractormanualz.com/

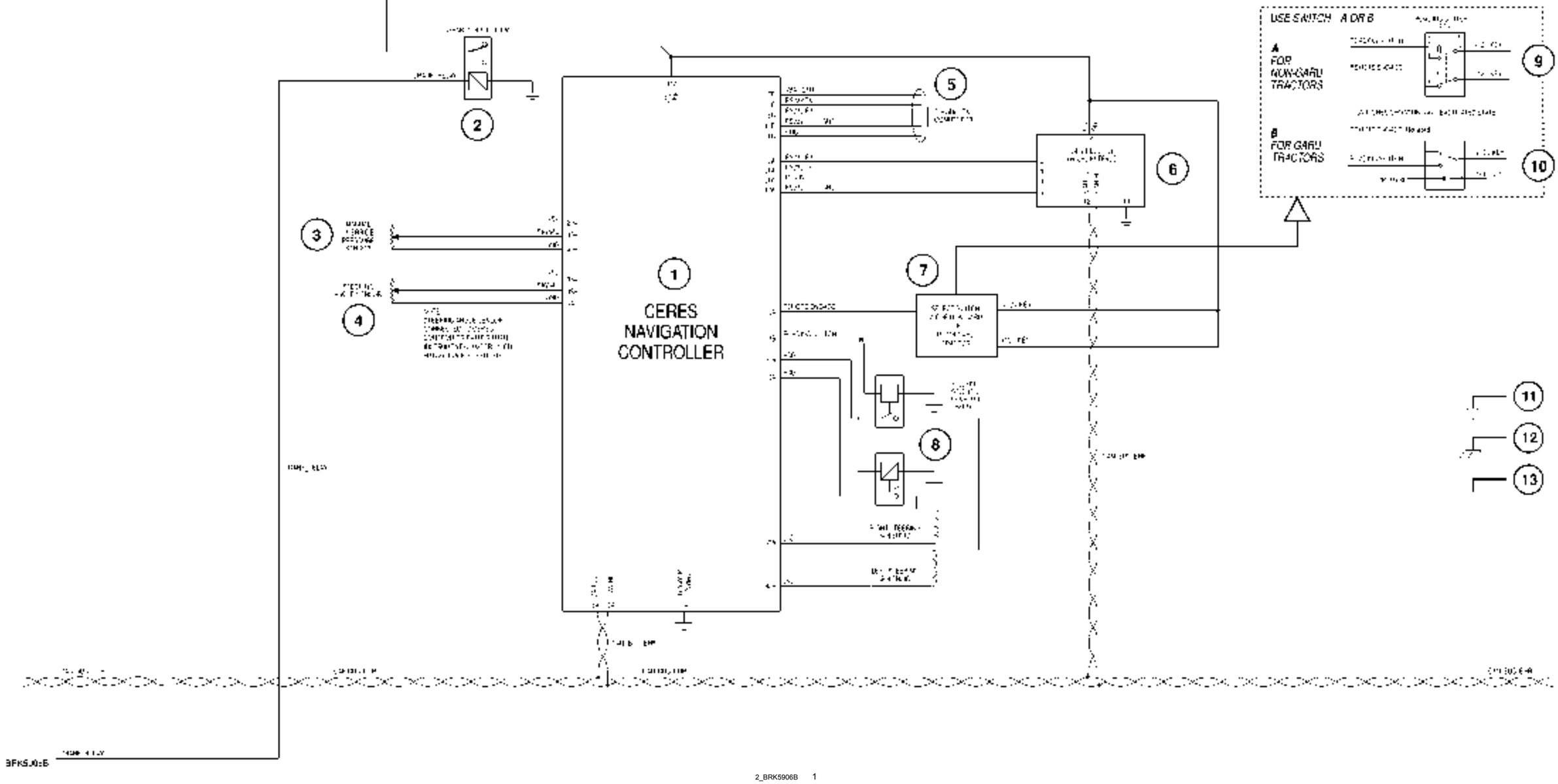

2_BRK5906B 1

https://tractormanualz.com/

Control module - Electronic schema Electro-Hydraulic Remotes

Component designation	
1. Supply relay EHRs	
2. CAN BUS terminating resistor	
3. EHR 1 rear	
4. EHR 2 rear	
5. EHR 3 rear	
6. EHR 4 rear	
7. EHR 5 rear	
8. EHR 1 FRONT (MID)	
9. EHR 2 FRONT (MID)	
10. EHR 3 FRONT (MID)	
11. EHR 4 FRONT (MID)	
12. Sensor signal ground	
13. Chassis ground	
14. Supply ground	

https://tractormanualz.com/

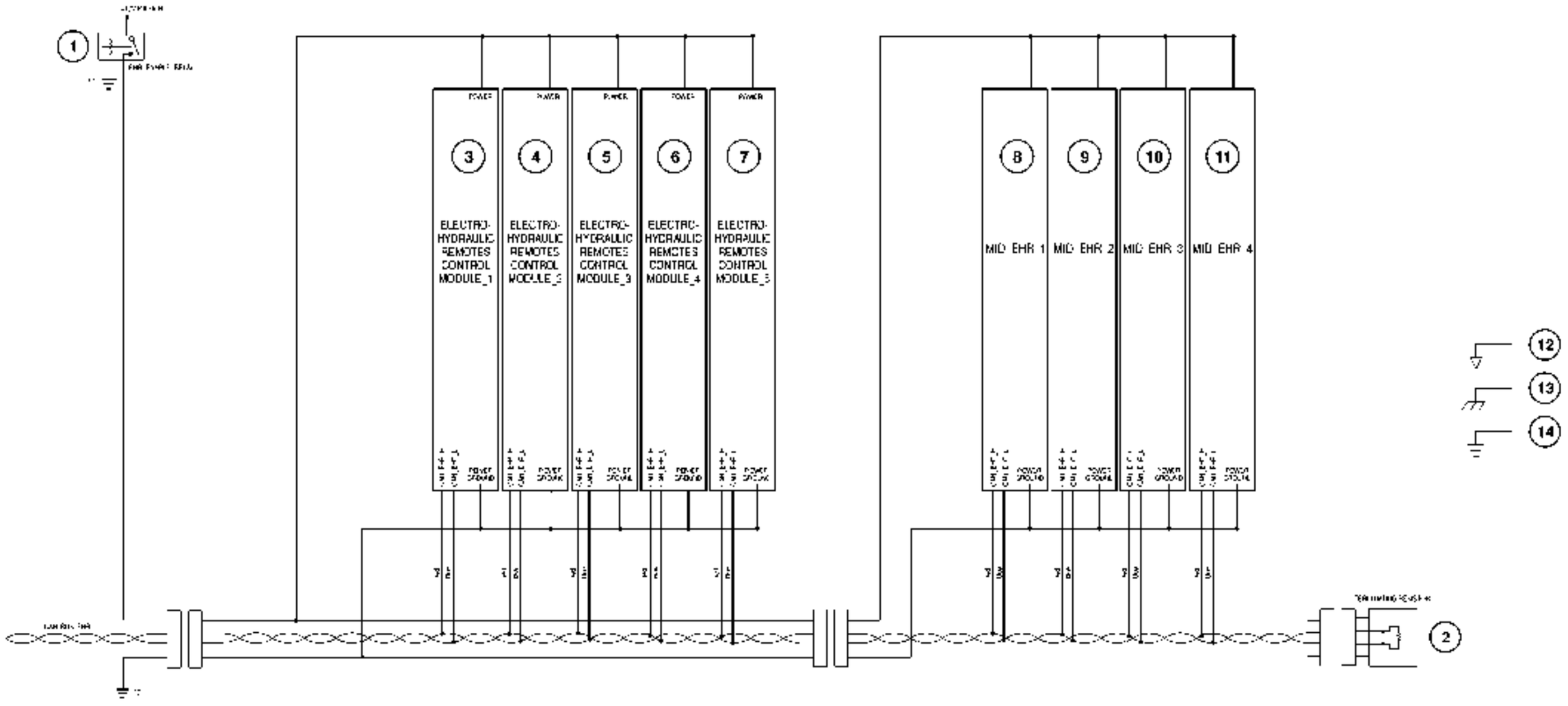

1_BRK5900B 1

https://tractormanualz.com/

https://tractormanualz.com/

Control module - Fault code index

Continuously Variable Transmission (CVT) Calibration 'U' Error Codes

Code	Description	Possible Failure
U16	ERPM dropped too soon during clutch calibration	1) Engine lugged down too soon. Possible PWM valve faulty or a mechanical fault within the transmission
U17	Seat switch not activated	1) Operator not in seat 2) Open circuit for the seat switch input to the transmission module 3) Faulty seat switch 4) Switched 12v supply fuse blown Note: Use the H5 switch diagnostics to detect if the seat switch is connected
U19	Oil temperature below **10 °C**	1) Open circuit for the temperature sensor input to module 2) Faulty temperature sensor 3) Incorrect temperature sensor type set in transmission, H3, channel 7 Note: Use the H9 in the transmission module to see if the temperature sensor input is OK
U20	Handbrake is not set	1) Open circuit for the handbrake feed into the transmission module 2) Faulty handbrake switch 3) Switched 12v supply fuse blown Note: Use the H5 switch diagnostics to detect if the handbrake is connected
U21	ERPM is below 1100, increase throttle	1) Operator has not set the correct engine speed 2) Instrument cluster is not powered 3) Broken CAN Note: Use the H9 in the transmission module to see if the engine speed is being detected
U22	ERPM is above 1300, reduce throttle	1) Operator has not set the correct engine speed
U23	Shuttle lever is in neutral, shift it to forward	1) Operator has not selected forward on the shuttle lever 2) Open circuit between the shuttle lever and the transmission module 3) Switched 12v supply fuse blown Note: Use the H5 switch diagnostics to detect if the switch is connected
U26	Clutch pedal is not up, release clutch pedal	1) Operator has not released the clutch pedal 2) The clutch potentiometer / linkage is sticking or broken Note: Use the H9 in the transmission module to see if the clutch input is OK
U31	Wheel speed sensed - tractor moving	1) Handbrake not applied 2) Brakes not working Note: If the brakes are OK move the vehicle forward slightly and repeat calibration
U36	Max allowed clutch calibration value exceeded	1) Current value exceeded without lugging the engine down. Possible PWM valve faulty or a low hydraulic pressure fault
U51	Engine speed error	1) Engine speed must be between 850 and 950 rpm 2) CAN bus error
U55	PTO started	1) The PTO was started during the PTO twist sensor calibration, ensure the PTO is turned off
U58	PTO sensor open circuit	Wiring or connectors to PTO twist sensor
U59	PTO sensor short circuit to ground	Wiring or connectors to PTO twist sensor
U70	PTO twist sensor not calibrated	Calibration value was too high or too low
U75	Quick fill calibration value too high	1) Wiring problem (on clutch solenoid) 2) Clutch solenoid damaged 3) Clutch mechanical problem
U76	Quick fill calibration value too low	1) Wiring problem (on clutch solenoid) 2) Clutch solenoid damaged 3) Clutch mechanical problem

https://tractormanualz.com/

Code	Description	Possible Failure
U77	Damper calibration value too high	1) Wiring problem 2) Sensor damaged 3) Wrong damper installation 4) Mechanical problem on driveline
U78	Damper calibration value too low	1) Wiring problem 2) Sensor damaged 3) Wrong damper installation 4) Mechanical problem on driveline
U79	PTO twist sensor not plausible	1) Sensor damaged or incorrectly installed
U91	Syncro potentiometer signal is out of range for F1 position	1) Wiring problem on synchronizer solenoids or potentiometer 2) Potentiometer damaged 3) Mechanical problem on driveline
U92	Syncro potentiometer signal is out of range for F3 position	1) Wiring problem on synchronizer solenoids or potentiometer 2) Potentiometer damaged 3) Mechanical problem on driveline
U93	F1 did not engage properly	1) Wiring problem on synchronizer potentiometer 2) Synchronizer potentiometer damaged 3) Clutch A or dump valve problem (electrical, hydraulic or mechanical) 4) Mechanical problem on driveline
U94	F3 did not engage properly	1) Wiring problem on synchronizer potentiometer 2) Synchronizer potentiometer damaged 3) Clutch A or dump valve problem (electrical, hydraulic or mechanical) 4) Mechanical problem on driveline
U95	Syncro potentiometer signal is out of range for F2 position	1) Wiring problem on synchronizer solenoids or potentiometer 2) Potentiometer damaged 3) Mechanical problem on driveline
U96	Syncro potentiometer signal is out of range for R1 position	1) Wiring problem on synchronizer solenoids or potentiometer 2) Potentiometer damaged 3) Mechanical problem on driveline
U97	F2 did not engage properly	1) Wiring problem on synchronizer potentiometer 2) Synchronizer potentiometer damaged 3) Clutch B or dump valve problem (electrical, hydraulic or mechanical) 4) Mechanical problem on driveline
U98	R1 did not engage properly	1) Wiring problem on synchronizer potentiometer 2) Synchronizer potentiometer damaged 3) Clutch B or dump valve problem (electrical, hydraulic or mechanical) 4) Mechanical problem on driveline
U99	Syncro potentiometer signal is out of range for R2 position	1) Wiring problem on synchronizer solenoids or potentiometer 2) Potentiometer damaged 3) Mechanical problem on driveline
U100	Syncro potentiometer signal is out of range for F4 position	1) Wiring problem on synchronizer solenoids or potentiometer 2) Potentiometer damaged 3) Mechanical problem on driveline
U101	R2 did not engage properly	1) Wiring problem on synchronizer potentiometer 2) Synchronizer potentiometer damaged 3) Clutch A or dump valve problem (electrical, hydraulic or mechanical) 4) Mechanical problem on driveline
U102	F4 did not engage properly	1) Wiring problem on synchronizer potentiometer 2) Synchronizer potentiometer damaged 3) Clutch B or dump valve problem (electrical, hydraulic or mechanical) 4) Mechanical problem on driveline

https://tractormanualz.com/

Code	Description	Possible Failure
U103	F1/F3 wrong neutral position	1) Wiring problem 2) Potentiometer damaged 3) Mechanical problem on driveline
U104	F2/R1 wrong neutral position	1) Wiring problem 2) Potentiometer damaged 3) Mechanical problem on driveline
U105	F4/R2 wrong neutral position	1) Wiring problem 2) Potentiometer damaged 3) Mechanical problem on driveline
U107	Clutch not working	1) Wiring problem 2) Potentiometer damaged 3) Mechanical problem on driveline
U108	Damper torque not readable	1) Wiring problem 2) Sensor damaged 3) Wrong damper installation 4) Damper not calibrated
U109	Hydro not in position	1) Wiring problem (on hydro–in or hydro–out sensors) 2) Sensor damaged (hydro–in or hydro–out) 3) Low pressure on hydraulic circuit 4) Mechanical problem

Electronic Draft Control Calibration 'U' Error Codes

Code	Description	Possible Failure
Note: There are no 'U' error codes defined for the electronic draft control calibration procedure. However the following error codes may be displayed during the procedure.		
1068	Height limit control not fully clockwise	1) The height limit control is not turned fully clockwise 2) The height limit control is faulty
1070	EDC hydraulic ram size not configured	Ram size not configured on a new controller or following H8 procedure Note: Use EDC H3, channel 1 to configure

Shiftable PTO Calibration 'U' Error Codes

Code	Description	Possible Failure
U112	PTO speed select cable stalled while extending	1) Cable not connected correctly in neutral position 2) Cable jammed 3) Sensor not connected
U113	PTO speed select cable stalled while retracting	1) Cable not connected correctly in neutral position 2) Cable jammed 3) Sensor not connected
U124	PTO speed select switch in optional speed position	1) Speed select switch is in the wrong position – selector switch set to 1000 or N position instead of optional speed position 2) Selector switch wiring incorrect 3) Speed selector switch faulty
U125	Incorrect optional speed calculation	1) PTO speed RPM inaccurate 2) PTO speed select cable not set up correctly
U126	No movement from position sensor	1) -

Front Suspension Calibration 'U' Error Codes

Code	Description	Possible Failure
U01	Front axle potentiometer open circuit – ACP will not work	1) Check the wiring harness 2) Check the displayed potentiometer reading during calibration. If less than 10 then replace the potentiometer
U02	Front axle potentiometer threshold is higher than set limit	1) Check the potentiometer installation 2) Check the displayed potentiometer reading during calibration. If greater than 972 then change the potentiometer 3) Check the wiring harness

https://tractormanualz.com/

Code	Description	Possible Failure
U03	Front axle potentiometer short circuit – ACP will not work	1) Check the wiring harness 2) Check if signal ground on potentiometer is open circuit 3) Change the potentiometer
U04	Front axle potentiometer threshold is lower than set limit	1) Change the potentiometer
U05	Suspension is not reaching its minimum / maximum position during ACP procedure	1) Check the range of the potentiometer, calibration will not work if the range of the potentiometer is less than 150 2) Check the suspension mechanics 3) Check the potentiometer linkage
U07	Suspension is stationary during the raise command in the ACP procedure	1) Check the raise solenoid harness 2) Check the suspension mechanics 3) Check the potentiometer linkage 4) Check the pressure of the accumulators 5) Check the hydraulic pressure 6) Disconnect implement
U08	Suspension unable to reach maximum height within 20 seconds	1) Check the raise valve installation 2) Check the unload solenoid installation 3) Check the suspension mechanics 4) Check the hydraulic pressure 5) Disconnect implement
U09	Suspension is stationary during the lowering command in the ACP procedure	1) Check the unload solenoid harness 2) Check the suspension mechanics 3) Check the potentiometer linkage 4) Check the hydraulic pressure 5) Disconnect implement
U10	Suspension unable to reach minimum height within 25 seconds	1) Check unload solenoid installation 2) Check the hydraulic pressure 3) Disconnect implement
U11	Unable to calibrate suspension	1) The lockout switch was pressed more than 3 times to initiate calibration 2) Check the suspension mechanics 3) Check the hydraulic pressure
U12	ACP stopped, vehicle not stationary	1) Handbrake not applied 2) Rear axle speed sensor faulty
U13	Valve 30 (upper lockout) solenoid open circuit	1) Check the wiring harness
U14	Valve 31 (lower lockout) solenoid open circuit	1) Check the wiring harness
U15	Valve 30 (upper lockout) and Valve 31 (lower lockout) solenoid connectors swapped	1) Check the wiring harness
U16	Valve 30 (upper lockout) and Valve 31 (lower lockout) current sense inputs swapped	1) Check the wiring harness
U17	Front suspension pressure switch open circuit	1) Check the wiring harness
U18	Front suspension pressure switch short circuit	1) Check the wiring harness

Rear Electronic Hydraulic Remote Valves Calibration 'U' Error Codes

Code	Description	Possible Failure
U61	Lever No.1 not in neutral	–
U62	Lever No.2 not in neutral	–
U63	Lever No.3 not in neutral	–
U64	Lever No.4 not in neutral	–

https://tractormanualz.com/

Front Hitch Calibration 'U' Error Codes

Code	Description	Possible Failure
U110	Position potentiometer value too low or the hitch is not raised	Hitch was not raised before height limit control was changed from ON to OFF position

Steering Calibration 'U' Error Codes

Code	Description	Possible Failure
U19	Oil temperature below **5 °C**	1) Open circuit for the temperature sensor input to the transmission module 2) Faulty temperature sensor Note: Use the H9 menu in the transmission module to see if the temperature sensor input is okay
U21	ERPM is below 1300, increase throttle	1) Operator has not set the correct engine speed 2) Open circuit for the engine speed sensor going to the cluster – mechanical engines only 3) Instrument cluster is not powered 4) Broken CAN bus Note: Use the HE menu to see if the engine speed is being detected
U71	Calibration attempted while enable switch is off	1) The enable switch is in the off position 2) The enable switch is in the on position at start up but needs to be cycled through off then on to enable the system
U72	Proximity sensor input is out of range – open	1) Incorrect position of steering wheel 2) Faulty proximity sensor 3) Check the proximity sensor connection
U73	Proximity sensor input is out of range – closed	1) Incorrect position of steering wheel 2) Faulty proximity sensor 3) Check the proximity sensor connection
U74	LVDT calibration has been unsuccessful (out of range after 4th attempt)	1) Faulty LVDT sensor 2) Faulty steering hydraulic valve 3) Incorrect assembly of hydraulic valve 4) Check the LVDT sensor connection

EPL Calibration 'U' Error Codes

Code	Description	Possible Failure
U114	Hand brake applied	1) Blue cable (on the handbrake switch connector) cut off 2) Mismatch between the handbrake switch status hardwired to the EPL and the VCU_HB_SWITCH parameter in the VCU2EPL CAN message
U115	Shuttle lever not in the park position	1) Pins A4 or C7 of the EPL module short to ground 2) Pins A4 or C7 of the EPL module cut off 3) Pins A4 or C7 of the EPL module short to supply voltage 4) Shuttle lever damaged
U116	APP position too high	1) Wrong mechanical adjustment of the EPL transmission lever 2) Possible wear in the braking pads
U117	APP position too low	1) Stiffness of the system is too high – possible mechanical interferences 2) Wrong mechanical installation of the EPL
U118	Error codes active preventing completion of initialization procedure	1) High recovery level error code is being activated
U119	Bowden cable not connected	1) Bowden cable not connected
U120	Inclinometer self test failed	1) Inclinometer broken
U121	Inclinometer calibration procedure not OK	–
U122	Inclinometer offset out of range	1) Check the inclinometer installation 2) Vehicle not on flat ground 3) Remove any rear attachment 4) Incorrect wheels could be installed

https://tractormanualz.com/

Code	Description	Possible Failure
U123	Vehicle moving	1) Vehicle not stationary 2) Vehicle speed sensor failed

Electronic Draft Control (EDC) – Error Codes

Code	Description
1002	Radar disconnected
1003	Speed sensor error
1004	Wheel speed sensor – signal too high
1008	Raise / work switch failure (command arm)
1009	Both external switches operated at the same time
1014	R/H load sensing pin – signal too low
1015	R/H load sensing pin – signal too high
1016	L/H load sensing pin – signal too low
1017	L/H load sensing pin – signal too high
1018	Both load sensing pins disconnected
1019	Load sensing pin 8V reference – voltage too low
1020	Load sensing pin 8V reference – voltage too high
1024	Perform the hydraulic lift calibration
1027	Lift arm position sensor – voltage too low
1028	Lift arm position sensor – voltage too high
1029	Hydraulic control valve disconnected
1030	Signal ground open circuit
1031	Chassis harness disconnected
1049	Hydro in speed sensor open circuit
1053	5 Volt reference – short to +12v
1054	5 Volt reference – short to ground
1059	8 Volt reference error (draft load pins)
1063	Hydraulic valve lower solenoid – open circuit
1064	Hydraulic valve raise solenoid – open circuit
1065	Hydraulic valve lower solenoid – short circuit
1066	Hydraulic valve raise solenoid – short circuit
1067	Hydraulic valve supply voltage – voltage too low
1068	Height limit control not set to maximum during calibration
1070	Hydraulic ram configuration not set

Transmission – Error Codes

Code	Description
2007	Low power 5V reference – voltage too low
2008	Low power 5V reference – voltage too high
2009	Seat switch input – voltage too low
2010	Seat switch input – voltage too high
2011	Clutch pedal potentiometer – voltage too low
2012	Clutch pedal potentiometer – voltage too high
2021	Transmission harness disconnected
2024	All clutches not calibrated
2026	Engine speed – too high
2027	Engine speed – no signal
2035	Dump solenoid – short to 12V
2036	Dump solenoid – short to ground or open circuit
2037	Clutch pedal disconnect switch – open circuit
2046	Fuse sense input – open circuit
2047	Clutch pedal disconnect switch set too high
2048	Clutch pedal disconnect switch set too low
2049	Wheel speed (transmission output speed) sensor – short to ground or open circuit

https://tractormanualz.com/

Code	Description
2050	Wheel speed (transmission output speed) sensor – short to 12V
2051	Oil temperature sensor – open circuit
2052	Oil temperature sensor – short circuit
2053	5V reference voltage – too high
2054	5V reference voltage – too low
2055	Wheel speed (transmission output speed) sensor – no signal
2059	Shuttle lever switch disagreement
2070	Shuttle lever forward switch – voltage too high
2071	Shuttle lever forward switch – voltage too low
2072	Shuttle lever reverse switch – voltage too high
2073	Shuttle lever reverse switch – voltage too low
2075	Flywheel speed sensor signal error
2076	Flywheel speed sensor – open circuit
2077	Flywheel speed sensor – short circuit
2079	Flywheel speed sensor – no signal
2124	Flywheel speed sensor not calibrated
2303	Damper calibration – low error
2304	Damper calibration – high error
2331	Clutch slipping fault (CP displayed)
2342	Clutch A solenoid – open circuit or short circuit to ground
2343	Clutch B solenoid – open circuit or short circuit to ground
2352	Clutch A solenoid – voltage too high
2353	Clutch B solenoid – voltage too high
2362	Clutch A not calibrated
2363	Clutch B not calibrated
2380	Parklock – unable to reach desired position
2381	Parklock – bus off
2382	Parklock – bus integrity error
2501	Oil pressure sensor – open circuit or short circuit to ground
2502	Oil pressure sensor – short circuit to +5V
2503	Clutch A solenoid – in use, an open circuit or short circuit to ground
2504	Clutch B solenoid – in use, an open circuit or short circuit to ground
2505	Clutch A pressure not plausible
2506	Clutch B pressure not plausible
2507	F1/F3 synchro potentiometer – signal too high
2508	F1/F3 synchro potentiometer – signal too low
2509	Synchro not moving towards F1
2510	Synchro not moving towards F3
2511	F1 solenoid - open circuit or short circuit to ground
2512	F3 solenoid - open circuit or short circuit to ground
2513	F1 solenoid - circuit fault
2514	F3 solenoid - circuit fault
2517	F2/R1 synchro potentiometer – signal too high
2518	F2/R1 synchro potentiometer – signal too low
2519	Synchro not moving towards F2
2520	Synchro not moving towards R1
2521	F2 solenoid - open circuit or short circuit to ground
2522	R1 solenoid - open circuit or short circuit to ground
2523	F2 solenoid - circuit fault
2524	R1 solenoid - circuit fault
2527	F4/R2 synchro potentiometer – signal too high
2528	F4/R2 synchro potentiometer – signal too low
2529	Synchro not moving towards F4
2530	Synchro not moving towards R2
2531	F4 solenoid - open circuit or short circuit to ground

https://tractormanualz.com/

Code	Description
2532	R2 solenoid - open circuit or short circuit to ground
2533	F4 solenoid - circuit fault
2534	R2 solenoid - circuit fault
2536	Hydro in sensor – open circuit or short circuit to ground
2537	Hydro in sensor – short to 12V
2538	Ring speed sensor – open circuit or short circuit to ground
2539	Ring speed sensor – short to 12V
2540	A clutch pressure transducer – open circuit or short circuit to ground
2541	B clutch pressure transducer – open circuit or short circuit to ground
2542	A clutch pressure transducer – short circuit to 5V
2543	B clutch pressure transducer – short circuit to 5V
2544	Ring speed sensor critical air gap
2545	ORPM sensor critical air gap
2546	Hydro in sensor – no signal
2547	Ring speed sensor – no signal
2548	Brake pressure transducer – open circuit or short circuit to ground
2549	Brake pressure transducer – short to 12V
2552	Transmission oil pressure too high
2553	Transmission oil pressure too low
2557	Hydro 1 solenoid – open circuit or short circuit to ground
2558	Hydro 1 solenoid – short circuit to 12V
2559	ORPM and Ring sensor fault

Engine – Error Codes

Code	Description
3001	Foot throttle sensor – signal not plausible
3002	Foot throttle sensor – signal above range maximum
3003	Foot throttle sensor – signal below range minimum
3006	Coolant temperature signal – signal not plausible
3007	Coolant temperature signal – signal above range maximum
3008	Coolant temperature signal – signal below range minimum
3010	Air intake temperature sensor – signal above range maximum
3011	Air intake temperature sensor – signal below range minimum
3015	Fuel temperature sensor – signal above range maximum
3016	Fuel temperature sensor – signal below range minimum
3019	Boost pressure sensor – signal above range maximum
3022	Boost pressure sensor – signal not plausible
3023	Atmospheric pressure sensor – signal not plausible
3024	Atmospheric pressure sensor – signal above range maximum
3025	Atmospheric pressure sensor – signal below range minimum
3028	Oil pressure too low
3029	Oil pressure sensor – short circuit to battery
3030	Oil pressure sensor – short circuit to ground
3032	Oil pressure sensor – value too high
3033	Oil temperature sensor – signal not plausible
3034	Oil temperature sensor – signal above range maximum
3035	Oil temperature sensor – signal below range minimum
3037	Boost pressure sensor – signal low
3038	Constant engine RPM activate / select switch – short circuit to battery
3047	High pressure pump relay – short circuit to battery
3048	High pressure pump relay – short circuit to ground
3051	Battery voltage to ECM – voltage too high
3052	Battery voltage to ECM – voltage too low
3060	Cylinder 1 – unclassifiable error in injector
3061	Cylinder 1 – injector cable short circuit (low side to battery)

https://tractormanualz.com/

Code	Description
3063	Cylinder 1 – injector cable short circuit (high side to ground)
3064	Cylinder 5 – unclassifiable error in injector
3065	Cylinder 5 – injector cable short circuit (low side to battery)
3067	Cylinder 5 – injector cable short circuit (high side to ground)
3068	Cylinder 3 – unclassifiable error in injector
3069	Cylinder 3 – injector cable short circuit (low side to battery)
3071	Cylinder 3 – injector cable short circuit (high side to ground)
3072	Cylinder 6 – unclassifiable error in injector
3073	Cylinder 6 – injector cable short circuit (low side to battery)
3075	Cylinder 6 – injector cable short circuit (high side to ground)
3076	Cylinder 2 – unclassifiable error in injector
3077	Cylinder 2 – injector cable short circuit (low side to battery)
3079	Cylinder 2 – injector cable short circuit (high side to ground)
3080	Cylinder 4 – unclassifiable error in injector
3081	Cylinder 4 – injector cable short circuit (low side to battery)
3083	Cylinder 4 – injector cable short circuit (high side to ground)
3088	Crankshaft sensor – no signal
3089	Crankshaft sensor – invalid signal
3090	Camshaft sensor – no signal
3091	Camshaft sensor – invalid signal
3093	Offset between camshaft and crankshaft – outside boundaries
3095	Operating with camshaft sensor only – backup mode
3096	ECM busoff on CAN A
3102	Rail pressure sensor CP3 – signal below range minimum
3104	Rail pressure relief valve – open
3105	Rail pressure relief valve – pressure shock requested
3106	Rail pressure relief valve – did not open after pressure shock
3107	Metering unit – short circuit to battery
3108	Metering unit – short circuit to ground
3110	Rail pressure sensor monitoring – signal below range minimum
3111	Rail pressure sensor monitoring – signal above range maximum
3112	Rail pressure sensor CP3 – signal above maximum range
3120	PTO twist sensor – not plausible
3121	PTO twist sensor – open circuit
3122	PTO twist sensor – short circuit to ground
3123	PTO twist sensor – not calibrated
3124	Hand throttle – channel 2 signal above range maximum
3125	Hand throttle – channel 2 signal below range minimum
3126	Hand throttle – channel 1 signal above range maximum
3127	Hand throttle – channel 1 signal below range minimum
3128	Hand throttle – channel difference error
3129	Hand throttle – idle switch closed circuit
3130	Hand throttle – idle switch open circuit
3131	Grid heater always switched on
3137	Metering unit – open load
3138	Metering unit – temperature too high
3141	Fuel flow setpoint too low
3142	High pressure test – test active
3145	Terminal 15 – no signal
3147	Oil temperature too high
3148	Coolant temperature sensor dynamic test – failure
3154	Grid heater relay – short circuit to battery
3155	Grid heater relay – short circuit to ground
3156	Grid heater relay – no load
3157	ECM not detected on CAN bus

https://tractormanualz.com/

Code	Description
3158	Invalid ECM checksum
3159	Invalid engine reference torque
3160	Fan actuator – short circuit to battery
3161	Fan actuator – short circuit to ground
3162	Fan actuator – temperature too high
3163	Fan actuator – no load
3176	Setpoint of metering unit not plausible in overrun
3177	Engine overspeed detected
3179	Timeout of CAN message BC2EDC2
3180	Timeout of CAN message VM2EDC
3182	Timeout of CAN message RxCCVS
3185	Timeout of CAN message TF
3188	Cylinder 1 warning – open load
3192	Cylinder 2 warning – open load
3196	Cylinder 3 warning – open load
3200	Cylinder 4 warning – open load
3204	Cylinder 5 warning – open load
3208	Cylinder 6 warning – open load
3210	Bank 1 – general short circuit to injection cable
3211	Bank 1 – injection cable short circuit low side to ground
3213	Bank 1 – unclassifiable error
3218	Bank 2 – general short circuit to injection cable
3219	Bank 2 – injection cable short circuit low side to ground
3221	Bank 2 – unclassifiable error
3227	Injection processor (CY33X) error – internal reset / clock loss / voltage too low
3228	Injection processor (CY33X) error – unlocked / initialisation failure
3229	Injection processor (CY33X) error – injections limited by software
3230	Injection processor (CY33X) error – SPI communication failure
3231	Injection processor error – internal reset / clock loss / voltage too low
3232	Injection processor error – unlocked / initialisation failure
3233	Injection processor error – test mode
3234	Injection processor error – SPI communication failure
3238	ECM internal SPI communications error – CJ940
3239	ECM EEPROM – read operation failure
3240	ECM EEPROM – write operation failure
3241	ECM EEPROM – default value used
3242	ECM (locked) recovery occurred
3243	ECM recovery (suppressed) – recovery occurred
3244	ECM recovery (visible) – recovery occurred
3245	ECM processor – watchdog not plausible
3246	Shutoff paths during initialisation – watchdog
3247	Shutoff paths during initialisation – supply voltage too high
3248	Shutoff paths during initialisation – supply voltage too low
3249	TPU monitoring – time deviation between TPU and system not plausible
3250	Dataset – variant defect
3251	Dataset – requested variant could not be set
3252	Controller watchdog – SPI communication failure
3253	ADC monitoring – reference voltage too low
3254	ADC monitoring – reference voltage too high
3255	ADC monitoring – test impulse error
3256	ADC monitoring – queue error
3263	ECM BusOff on CAN C
3265	Overrun monitoring
3266	Redundant engine speed in overrun monitoring
3278	ECM internal supply voltage too high

https://tractormanualz.com/

Code	Description
3279	ECM internal supply voltage too low
3280	Sensor supply voltage 1 high
3281	Sensor supply voltage 1 low
3283	Sensor supply voltage 2 high
3284	Sensor supply voltage 2 low
3285	Sensor supply voltage 3 high
3286	Sensor supply voltage 3 low
3297	Rail pressure positive deviation high and high fuel flow setpoint value
3301	Rail pressure negative deviation too high on minimum metering
3305	Rail pressure below minimum limit in controller mode
3309	Rail pressure above maximum limit in controlled mode
3313	Rail pressure drop rate too high
3316	Minimum number of injections not reached – stop engine
3334	Timeout of CAN message TSC1–PE Torque (when active)
3335	Timeout of CAN message TSC1–PE Torque (when inactive)
3338	Timeout of CAN message TSC1–VE Speed (when inactive)
3339	Timeout of CAN message TSC1–VE Speed (when active)
3345	Total throttle failure
3367	Coolant temperature test failure
3368	INFO: Torque limitation due to OBD Performance Limiter by legislation
3369	INFO: Torque reduction due to smoke reduction
3370	INFO: Torque limitation due to Engine Protection (against excessive torque, engine overspeed and overheat)
3371	INFO: Torque limitation due to Fuel Quantity Limitation because of injector system errors
3375	Constant engine RPM increase / decrease switch – short circuit to battery
3999	Unknown ECM SPN Error Code

Rear Electronic Hydraulic Remote Valves – Error Codes

Code	Description
4100	Rear remote no.1 – no control message received
4101	Rear remote no.1 – control message not plausible
4102	Rear remote no.1 – EEPROM error
4103	Rear remote no.1 – switched to failsafe
4104	Rear remote no.1 – under voltage
4105	Rear remote no.1 – over voltage
4106	Rear remote no.1 – spool movement too low
4107	Rear remote no.1 – spool movement too high
4108	Rear remote no.1 – float position not reached
4109	Rear remote no.1 – manually operated
4110	Rear remote no.1 – driver faulty
4111	Rear remote no.1 – potentiometer faulty
4112	Rear remote no.1 – unable to reach neutral
4113	Rear remote no.1 – spool not in neutral at key on
4114	Rear remote no.2 – no control message received
4115	Rear remote no.2 – control message not plausible
4116	Rear remote no.2 – EEPROM error
4117	Rear remote no.2 – switched to failsafe
4118	Rear remote no.2 – under voltage
4119	Rear remote no.2 – over voltage
4120	Rear remote no.2 – spool movement too low
4121	Rear remote no.2 – spool movement too high
4122	Rear remote no.2 – float position not reached
4123	Rear remote no.2 – manually operated
4124	Rear remote no.2 – driver faulty
4125	Rear remote no.2 – potentiometer faulty

https://tractormanualz.com/

Code	Description
4126	Rear remote no.2 – unable to reach neutral
4127	Rear remote no.2 – spool not in neutral at key on
4128	Rear remote no.3 – no control message received
4129	Rear remote no.3 – control message not plausible
4130	Rear remote no.3 – EEPROM error
4131	Rear remote no.3 – switched to failsafe
4132	Rear remote no.3 – under voltage
4133	Rear remote no.3 – over voltage
4134	Rear remote no.3 – spool movement too low
4135	Rear remote no.3 – spool movement too high
4136	Rear remote no.3 – float position not reached
4137	Rear remote no.3 – manually operated
4138	Rear remote no.3 – driver faulty
4139	Rear remote no.3 – potentiometer faulty
4140	Rear remote no.3 – unable to reach neutral
4141	Rear remote no.3 – spool not in neutral at key on
4142	Rear remote no.4 – no control message received
4143	Rear remote no.4 – control message not plausible
4144	Rear remote no.4 – EEPROM error
4145	Rear remote no.4 – switched to failsafe
4146	Rear remote no.4 – under voltage
4147	Rear remote no.4 – over voltage
4148	Rear remote no.4 – spool movement too low
4149	Rear remote no.4 – spool movement too high
4150	Rear remote no.4 – float position not reached
4151	Rear remote no.4 – manually operated
4152	Rear remote no.4 – driver faulty
4153	Rear remote no.4 – potentiometer faulty
4154	Rear remote no.4 – unable to reach neutral
4155	Rear remote no.4 – spool not in neutral at key on
4156	Rear remote no.5 – no control message received
4157	Rear remote no.5 – control message not plausible
4158	Rear remote no.5 – EEPROM error
4159	Rear remote no.5 – switched to failsafe
4160	Rear remote no.5 – under voltage
4161	Rear remote no.5 – over voltage
4162	Rear remote no.5 – spool movement too low
4163	Rear remote no.5 – spool movement too high
4164	Rear remote no.5 – float position not reached
4165	Rear remote no.5 – manually operated
4166	Rear remote no.5 – driver faulty
4167	Rear remote no.5 – potentiometer faulty
4168	Rear remote no.5 – unable to reach neutral
4169	Rear remote no.5 – spool not in neutral at key on
4170	Rear EHR control No.1 – not calibrated
4173	Rear EHR control No.2 – not calibrated
4177	Rear EHR control no.3 – not calibrated
4180	Rear EHR control no.4 – not calibrated
4190	Rear remote no.1 – no communications
4191	Rear remote no.2 – no communications
4192	Rear remote no.3 – no communications
4193	Rear remote no.4 – no communications
4198	Rear remote no.5 – no communications
4216	Rear remote no.1 – spool not calibrated
4217	Rear remote no.2 – spool not calibrated

https://tractormanualz.com/

Code	Description
4218	Rear remote no.3 – spool not calibrated
4219	Rear remote no.4 – spool not calibrated
4220	Rear remote no.5 – spool not calibrated

https://tractormanualz.com/

Front Electronic Hydraulic Remote Valves – Error Codes

Code	Description
4500	Front remote no.1 – no control message received
4501	Front remote no.1 – control message not plausible
4502	Front remote no.1 – EEPROM error
4503	Front remote no.1 – switched to failsafe
4504	Front remote no.1 – under voltage
4505	Front remote no.1 – over voltage
4506	Front remote no.1 – spool movement too low
4507	Front remote no.1 – spool movement too high
4508	Front remote no.1 – float position not reached
4509	Front remote no.1 – manually operated
4510	Front remote no.1 – driver faulty
4511	Front remote no.1 – potentiometer faulty
4512	Front remote no.1 – unable to reach neutral
4513	Front remote no.1 – spool not in neutral at key on
4514	Front remote no.2 – no control message received
4515	Front remote no.2 – control message not plausible
4516	Front remote no.2 – EEPROM error
4517	Front remote no.2 – switched to failsafe
4518	Front remote no.2 – under voltage
4519	Front remote no.2 – over voltage
4520	Front remote no.2 – spool movement too low
4521	Front remote no.2 – spool movement too high
4522	Front remote no.2 – float position not reached
4523	Front remote no.2 – manually operated
4524	Front remote no.2 – driver faulty
4525	Front remote no.2 – potentiometer faulty
4526	Front remote no.2 – unable to reach neutral
4527	Front remote no.2 – spool not in neutral at key on
4528	Front remote no.3 – no control message received
4529	Front remote no.3 – control message not plausible
4530	Front remote no.3 – EEPROM error
4531	Front remote no.3 – switched to failsafe
4532	Front remote no.3 – under voltage
4533	Front remote no.3 – over voltage
4534	Front remote no.3 – spool movement too low
4535	Front remote no.3 – spool movement too high
4536	Front remote no.3 – float position not reached
4537	Front remote no.3 – manually operated
4538	Front remote no.3 – driver faulty
4539	Front remote no.3 – potentiometer faulty
4540	Front remote no.3 – unable to reach neutral
4541	Front remote no.3 – spool not in neutral at key on
4542	Front remote no.4 – no control message received
4543	Front remote no.4 – control message not plausible
4544	Front remote no.4 – EEPROM error
4545	Front remote no.4 – switched to failsafe
4546	Front remote no.4 – under voltage
4547	Front remote no.4 – over voltage
4548	Front remote no.4 – spool movement too low
4549	Front remote no.4 – spool movement too high
4550	Front remote no.4 – float position not reached
4551	Front remote no.4 – manually operated
4552	Front remote no.4 – driver faulty
4553	Front remote no.4 – potentiometer faulty

https://tractormanualz.com/

Code	Description
4554	Front remote no.4 – unable to reach neutral
4555	Front remote no.4 – spool not in neutral at key on
4560	Front remote no.1 – no communications
4561	Front remote no.2 – no communications
4562	Front remote no.3 – no communications
4563	Front remote no.4 – no communications
4565	High flow pump connection error
4566	High flow pump configuration error

Rear PTO – Error Codes

Code	Description
5003	Rear PTO brake output – open circuit
5005	Rear PTO brake switch – open circuit
5007	Rear PTO solenoid – stuck off
5008	Rear PTO solenoid – open circuit
5010	Rear PTO shift motor – open circuit
5011	Rear PTO shift motor – short circuit
5012	Rear PTO shift sensor error
5013	Rear PTO shift switch – open circuit
5014	Rear PTO shift switch – short circuit
5027	Rear PTO speed sensor – open circuit
5033	Rear PTO cab normally closed switch – open circuit
5034	Rear PTO fender switch – open circuit / short to ground
5035	Rear PTO fender switch – input shorted to 12V
5037	Rear PTO cab normally open switch – stuck closed
5042	Rear PTO management switch – stuck closed
5043	Rear PTO fender switch stuck on
5044	Rear PTO speed sensor – short to ground
5098	Rear PTO fender switch option not enabled

Four Wheel Drive – Error Codes

Code	Description
6023	FWD solenoid – open circuit

Difflock – Error Codes

Code	Description
7017	Difflock solenoid – open circuit
7024	Steering angle sensor not calibrated
7032	Steering angle sensor – signal too low

Front PTO – Error Codes

Code	Description
8007	Front PTO solenoid – stuck on
8008	Front PTO solenoid – open circuit
8033	Front PTO cab normally closed switch – open circuit
8037	Front PTO cab normally open switch – stuck closed
8099	Front PTO option not enabled

Front Hitch – Error Codes

Code	Description
9001	Front hitch position sensor – short circuit to 12V
9002	Front hitch position sensor – open circuit / short circuit to 0V
9003	Front hitch fender up switch error
9004	Front hitch fender down switch error
9005	Front hitch fender common switch error

https://tractormanualz.com/

Code	Description
9006	Front hitch position potentiometer – not calibrated

Suspended Front Axle – Error Codes

Code	Description
10001	Upper lockout solenoid error
10002	Raise solenoid error
10003	Lower solenoid error
10004	Front axle position sensor – threshold higher than set limit
10005	Front axle position sensor – threshold lower than set limit
10008	Go down error – suspension unable to return to set point
10009	Lower lockout solenoid error
10010	Chassis accelerometer – voltage too low (short circuit to ground / open circuit)
10011	Chassis accelerometer – voltage too high (short circuit to 5V)
10024	Front suspension not calibrated

Electronic Park Lock – Error Codes

Code	Description
12011	Power stage – over voltage protection
12012	Power stage – PH_A open circuit or PH_B open circuit, motor open
12013	Power stage – PH_A or PH_B short circuit to ground
12014	Power stage – PH_A or PH_B short circuit to Vbatt
12017	Power stage – internal service voltage (Vr)not viable
12018	Power stage – current over absolute range / motor short
12019	Power stage – current over dynamic set point
12020	Power stage – unexpected current
12024	Ignition key – key hardware Vs CAN signals coherence check
12032	Encoder – hardware fault on power supply
12033	Encoder virtual peripheral failure (XGATE) wrong sequence, interrupt failure
12034	Encoder function not available (A or B signal not available)
12043	Inclinometer – self test
12052	Battery – lower than 9V
12053	Battery – Higher than 16V
12054	Battery – out of range / spike diagnosis
12066	Trailer relay – open wire / load and output to 12V
12068	Trailer relay – output short circuit to ground
12073	Output status – output incongruence Vs Input
12132	CAN – bus off
12133	CAN – mute
12142	CAN – VCU_TRAIL_BRAKE-INH error / not available
12143	CAN – VCU_VEH_DIRECTION error / not available
12144	CAN – VCU_SPEED error / not available
12145	CAN – VCU_CMD error / not available
12146	CAN – VCU_KEY_OFF_AA_INH error / not available
12147	CAN – engine RMP error / not available
12148	CAN – VCU_KEY error / not available
12150	CAN – VCU_HB_SWITCH error / not available
12151	Logic core – second microprocessor not present
12160	Logic core – EEPROM check
12162	ACU temperature – out of range / spike diagnosis
12163	ACU temperature – power stage over temperature
12172	Actuator – cable disconnection
12183	Actuator – actuator moving without command
12184	Actuator – actuator end stop zone reached
12185	Actuator – actuation timeout (energy) expired
12188	Actuator – excess pad wear

https://tractormanualz.com/

Code	Description
12192	Shuttle park – shuttle park invalid status
12202	Handbrake switch – handbrake switch incongruence
12212	Factory – accelerometer not calibrated
12213	Factory – actuator not initialised
12214	Factory – disable actuation
12215	Factory – trailer relay present but not configured

Cluster – Error Codes

Code	Description
14013	Steering angle sensor – short circuit to Vcc
14014	Steering angle sensor – short circuit to ground or open circuit
14015	5V supply voltage – too high
14016	5V supply voltage – too low
14021	Cranking line – shorted to 12V
14022	Cranking line – shorted to ground
14051	Fuel level sensor – short circuit to Vcc or open circuit
14052	Fuel level sensor – short circuit to ground
14061	Air brake pressure sensor – short circuit to VCC or option set but sensor not connected
14095	Vane pump – short circuit to ground
14096	Vane pump – short circuit to VCC or open circuit
14100	Air brake pressure – not configured
14102	SWCD – present but not configured
14104	EFH – present but not configured
14105	Electronic park lock – not configured
14106	Steering sensor – present but not configured
14300	Electronic park lock– mismatch between CAN and direct frequency input value
14301	Electronic park lock– direct frequency input shorted to Vcc or open circuit
14304	Electronic park lock– status not validated
14900	Transmission controller missing (RE/RN)
14901	Engine controller missing (EDC16)
14902	Auxiliary controller missing (RW/RN)
14904	Armrest controller missing (LC)
14905	Keypad missing (JA)(ADIC only)
14906	Steering controller missing (KA)
14908	TECU missing (OA)
14909	SWCD missing (VA)
14910	Climate controller missing
14914	Electronic park lock controller missing
14920	Configuration error (ADIC only)

Steering Controller – Error Codes

Code	Description
15002	Steering wheel control proximity sensor – open circuit
15003	Steering wheel control proximity sensor – short circuit
15006	Split valve LVDT – open circuit
15007	Split valve LVDT – short circuit
15008	Change valve solenoid – open circuit
15009	Change valve solenoid – short circuit across
15010	Safety switch fail
15011	Maximum engagement time elapsed (5 minutes)
15012	Split valve spool – stuck open
15013	Change valve or split valve spools – stuck closed
15014	Split valve spool stuck in transition zone – can’t identify which steering mode the tractor is definitely in.
15024	System not calibrated

https://tractormanualz.com/

Air Conditioning Controller – Error Codes

Code	Description
16111	Cab temperature sensor open or shorted to power
16112	Cab temperature sensor shorted to ground
16113	Outlet temperature sensor open or shorted to power
16114	Outlet temperature sensor shorted to ground
16115	Evaporator temperature sensor open or shorted to power
16116	Evaporator temperature sensor shorted to ground
16117	Outside air temperature sensor open or shorted to power
16118	Outside air temperature sensor shorted to ground
16120	Blower speed select potentiometer open or shorted to power
16121	Temperature select potentiometer open or shorted to power
16122	Mode select potentiometer open or shorted to power
16125	High pressure– low pressure switch (+) input shorted to power
16126	High pressure– low pressure switch (+) input shorted to ground
16127	High pressure– low pressure switch (–) input shorted to power
16128	High pressure– low pressure switch (–) input shorted to ground
16129	High pressure cycling error (2 in 1 minute)
16130	Low pressure switch (+) input shorted to power
16131	Low pressure switch (+) input shorted to ground
16132	Low pressure switch (–) input shorted to power
16133	Low pressure switch (–) input shorted to ground
16134	Low pressure switch open for greater than 1 minute

Armrest – Error Codes

Code	Description
18001	Hand throttle number 1 – voltage too low
18002	Hand throttle number 1 – voltage too high
18003	Hand throttle number 2 – voltage too low
18004	Hand throttle number 2 – voltage too high
18007	Multi-function handle – switch error
18008	Multi-function handle – voltage too low
18009	Multi-function handle – voltage too high
18010	Powershift throttle – voltage too low
18011	Powershift throttle – voltage too high
18012	CVT mode switch error
18013	Multi-function handle – encoder position error
18014	Rear hitch position control potentiometer – voltage too low
18015	Rear hitch position control potentiometer – voltage too high
18016	Rear hitch draft control potentiometer – voltage too low
18017	Rear hitch draft control potentiometer – voltage too high
18018	Rear hitch height limit potentiometer – voltage too low
18019	Rear hitch height limit potentiometer – voltage too high
18020	Rear hitch drop rate potentiometer – voltage too low
18021	Rear hitch drop rate potentiometer – voltage too high
18022	Rear hitch sensitivity control potentiometer – voltage too low
18023	Rear hitch sensitivity control potentiometer – voltage too high
18024	EHR flow encoder position error
18025	Rear hitch slip control potentiometer – voltage too low
18026	Rear hitch slip control potentiometer – voltage too high
18027	EHR 5 lever position – voltage too low
18028	EHR 5 lever position – voltage too high
18029	EHR 6 lever position – voltage too low
18030	EHR 6 lever position – voltage too high
18031	Front hitch position / pressure control potentiometer – voltage too low

https://tractormanualz.com/

Code	Description
18032	Front hitch position / pressure control potentiometer – voltage too high
18033	Front hitch position / pressure mix potentiometer – voltage too low
18034	Front hitch position / pressure mix potentiometer – voltage too high
18035	Front hitch position height limit potentiometer – voltage too low
18036	Front hitch position height limit potentiometer – voltage too high
18037	Front hitch height limit enable switch error
18038	Front hitch position drop rate potentiometer – voltage too low
18039	Front hitch position drop rate potentiometer – voltage too high
18040	EHR 1 lever position – voltage too low
18041	EHR 1 lever position – voltage too high
18042	EHR 2 lever position – voltage too low
18043	EHR 2 lever position – voltage too high
18044	EHR 3 lever position – voltage too low
18045	EHR 3 lever position – voltage too high
18046	EHR float control switch error
18047	EHR 4 lever position – voltage too low
18048	EHR 4 lever position – voltage too high
18049	Joystick 1 X-axis position – voltage too low
18050	Joystick 1 X-axis position – voltage too high
18051	Joystick 1 Y-axis position – voltage too low
18052	Joystick 1 Y-axis position – voltage too high
18053	Joystick 1 proportional rocker switch – voltage too low
18054	Joystick 1 proportional rocker switch – voltage too high
18055	Joystick 2 X-axis position – voltage too low
18056	Joystick 2 X-axis position – voltage too high
18057	Joystick 2 Y-axis position – voltage too low
18058	Joystick 2 Y-axis position – voltage too high
18059	Joystick 2 proportional rocker switch – voltage too low
18060	Joystick 2 proportional rocker switch – voltage too high
18061	Reference voltage – short circuit to ground
18062	Reference voltage – short circuit to 12V
18063	EEEPROM error
18064	MFH communication error
18065	MFH basic assurance test error
18066	EHR 1 lever implausibility error
18067	EHR 2 lever implausibility error
18068	EHR 3 lever implausibility error
18069	EHR 4 lever implausibility error

https://tractormanualz.com/

ELECTRONIC SYSTEM - Calibrate ’U’ Code Listing

Continuously Variable Transmission (CVT) Calibration ’U’ Error Codes

Code	Description	Possible Failure
U16	ERPM dropped too soon during clutch calibration	1) Engine lugged down too soon. Possible PWM valve faulty or a mechanical fault within the transmission
U17	Seat switch not activated	1) Operator not in seat 2) Open circuit for the seat switch input to the transmission module 3) Faulty seat switch 4) Switched 12v supply fuse blown Note: Use the H5 switch diagnostics to detect if the seat switch is connected
U19	Oil temperature below **10 °C**	1) Open circuit for the temperature sensor input to module 2) Faulty temperature sensor 3) Incorrect temperature sensor type set in transmission, H3, channel 7 Note: Use the H9 in the transmission module to see if the temperature sensor input is OK
U20	Handbrake is not set	1) Open circuit for the handbrake feed into the transmission module 2) Faulty handbrake switch 3) Switched 12v supply fuse blown Note: Use the H5 switch diagnostics to detect if the handbrake is connected
U21	ERPM is below 1100, increase throttle	1) Operator has not set the correct engine speed 2) Instrument cluster is not powered 3) Broken CAN Note: Use the H9 in the transmission module to see if the engine speed is being detected
U22	ERPM is above 1300, reduce throttle	1) Operator has not set the correct engine speed
U23	Shuttle lever is in neutral, shift it to forward	1) Operator has not selected forward on the shuttle lever 2) Open circuit between the shuttle lever and the transmission module 3) Switched 12v supply fuse blown Note: Use the H5 switch diagnostics to detect if the switch is connected
U26	Clutch pedal is not up, release clutch pedal	1) Operator has not released the clutch pedal 2) The clutch potentiometer / linkage is sticking or broken Note: Use the H9 in the transmission module to see if the clutch input is OK
U31	Wheel speed sensed - tractor moving	1) Handbrake not applied 2) Brakes not working Note: If the brakes are OK move the vehicle forward slightly and repeat calibration
U36	Max allowed clutch calibration value exceeded	1) Current value exceeded without lugging the engine down. Possible PWM valve faulty or a low hydraulic pressure fault
U51	Engine speed error	1) Engine speed must be between 850 and 950 rpm 2) CAN bus error
U55	PTO started	1) The PTO was started during the PTO twist sensor calibration, ensure the PTO is turned off
U58	PTO sensor open circuit	Wiring or connectors to PTO twist sensor
U59	PTO sensor short circuit to ground	Wiring or connectors to PTO twist sensor
U70	PTO twist sensor not calibrated	Calibration value was too high or too low
U75	Quick fill calibration value too high	1) Wiring problem (on clutch solenoid) 2) Clutch solenoid damaged 3) Clutch mechanical problem
U76	Quick fill calibration value too low	1) Wiring problem (on clutch solenoid) 2) Clutch solenoid damaged 3) Clutch mechanical problem

https://tractormanualz.com/

Code	Description	Possible Failure
U77	Damper calibration value too high	1) Wiring problem 2) Sensor damaged 3) Wrong damper installation 4) Mechanical problem on driveline
U78	Damper calibration value too low	1) Wiring problem 2) Sensor damaged 3) Wrong damper installation 4) Mechanical problem on driveline
U79	PTO twist sensor not plausible	1) Sensor damaged or incorrectly installed
U91	Syncro potentiometer signal is out of range for F1 position	1) Wiring problem on synchronizer solenoids or potentiometer 2) Potentiometer damaged 3) Mechanical problem on driveline
U92	Syncro potentiometer signal is out of range for F3 position	1) Wiring problem on synchronizer solenoids or potentiometer 2) Potentiometer damaged 3) Mechanical problem on driveline
U93	F1 did not engage properly	1) Wiring problem on synchronizer potentiometer 2) Synchronizer potentiometer damaged 3) Clutch A or dump valve problem (electrical, hydraulic or mechanical) 4) Mechanical problem on driveline
U94	F3 did not engage properly	1) Wiring problem on synchronizer potentiometer 2) Synchronizer potentiometer damaged 3) Clutch A or dump valve problem (electrical, hydraulic or mechanical) 4) Mechanical problem on driveline
U95	Syncro potentiometer signal is out of range for F2 position	1) Wiring problem on synchronizer solenoids or potentiometer 2) Potentiometer damaged 3) Mechanical problem on driveline
U96	Syncro potentiometer signal is out of range for R1 position	1) Wiring problem on synchronizer solenoids or potentiometer 2) Potentiometer damaged 3) Mechanical problem on driveline
U97	F2 did not engage properly	1) Wiring problem on synchronizer potentiometer 2) Synchronizer potentiometer damaged 3) Clutch B or dump valve problem (electrical, hydraulic or mechanical) 4) Mechanical problem on driveline
U98	R1 did not engage properly	1) Wiring problem on synchronizer potentiometer 2) Synchronizer potentiometer damaged 3) Clutch B or dump valve problem (electrical, hydraulic or mechanical) 4) Mechanical problem on driveline
U99	Syncro potentiometer signal is out of range for R2 position	1) Wiring problem on synchronizer solenoids or potentiometer 2) Potentiometer damaged 3) Mechanical problem on driveline
U100	Syncro potentiometer signal is out of range for F4 position	1) Wiring problem on synchronizer solenoids or potentiometer 2) Potentiometer damaged 3) Mechanical problem on driveline
U101	R2 did not engage properly	1) Wiring problem on synchronizer potentiometer 2) Synchronizer potentiometer damaged 3) Clutch A or dump valve problem (electrical, hydraulic or mechanical) 4) Mechanical problem on driveline
U102	F4 did not engage properly	1) Wiring problem on synchronizer potentiometer 2) Synchronizer potentiometer damaged 3) Clutch B or dump valve problem (electrical, hydraulic or mechanical) 4) Mechanical problem on driveline

https://tractormanualz.com/

Code	Description	Possible Failure
U103	F1/F3 wrong neutral position	1) Wiring problem 2) Potentiometer damaged 3) Mechanical problem on driveline
U104	F2/R1 wrong neutral position	1) Wiring problem 2) Potentiometer damaged 3) Mechanical problem on driveline
U105	F4/R2 wrong neutral position	1) Wiring problem 2) Potentiometer damaged 3) Mechanical problem on driveline
U107	Clutch not working	1) Wiring problem 2) Potentiometer damaged 3) Mechanical problem on driveline
U108	Damper torque not readable	1) Wiring problem 2) Sensor damaged 3) Wrong damper installation 4) Damper not calibrated
U109	Hydro not in position	1) Wiring problem (on hydro–in or hydro–out sensors) 2) Sensor damaged (hydro–in or hydro–out) 3) Low pressure on hydraulic circuit 4) Mechanical problem

Electronic Draft Control Calibration 'U' Error Codes

Code	Description	Possible Failure
Note: There are no 'U' error codes defined for the electronic draft control calibration procedure. However the following error codes may be displayed during the procedure.		
1068	Height limit control not fully clockwise	1) The height limit control is not turned fully clockwise 2) The height limit control is faulty
1070	EDC hydraulic ram size not configured	Ram size not configured on a new controller or following H8 procedure Note: Use EDC H3, channel 1 to configure

Shiftable PTO Calibration 'U' Error Codes

Code	Description	Possible Failure
U112	PTO speed select cable stalled while extending	1) Cable not connected correctly in neutral position 2) Cable jammed 3) Sensor not connected
U113	PTO speed select cable stalled while retracting	1) Cable not connected correctly in neutral position 2) Cable jammed 3) Sensor not connected
U124	PTO speed select switch in optional speed position	1) Speed select switch is in the wrong position – selector switch set to 1000 or N position instead of optional speed position 2) Selector switch wiring incorrect 3) Speed selector switch faulty
U125	Incorrect optional speed calculation	1) PTO speed RPM inaccurate 2) PTO speed select cable not set up correctly
U126	No movement from position sensor	1) -

Front Suspension Calibration 'U' Error Codes

Code	Description	Possible Failure
U01	Front axle potentiometer open circuit – ACP will not work	1) Check the wiring harness 2) Check the displayed potentiometer reading during calibration. If less than 10 then replace the potentiometer
U02	Front axle potentiometer threshold is higher than set limit	1) Check the potentiometer installation 2) Check the displayed potentiometer reading during calibration. If greater than 972 then change the potentiometer 3) Check the wiring harness

https://tractormanualz.com/

Code	Description	Possible Failure
U03	Front axle potentiometer short circuit – ACP will not work	1) Check the wiring harness 2) Check if signal ground on potentiometer is open circuit 3) Change the potentiometer
U04	Front axle potentiometer threshold is lower than set limit	1) Change the potentiometer
U05	Suspension is not reaching its minimum / maximum position during ACP procedure	1) Check the range of the potentiometer, calibration will not work if the range of the potentiometer is less than 150 2) Check the suspension mechanics 3) Check the potentiometer linkage
U07	Suspension is stationary during the raise command in the ACP procedure	1) Check the raise solenoid harness 2) Check the suspension mechanics 3) Check the potentiometer linkage 4) Check the pressure of the accumulators 5) Check the hydraulic pressure 6) Disconnect implement
U08	Suspension unable to reach maximum height within 20 seconds	1) Check the raise valve installation 2) Check the unload solenoid installation 3) Check the suspension mechanics 4) Check the hydraulic pressure 5) Disconnect implement
U09	Suspension is stationary during the lowering command in the ACP procedure	1) Check the unload solenoid harness 2) Check the suspension mechanics 3) Check the potentiometer linkage 4) Check the hydraulic pressure 5) Disconnect implement
U10	Suspension unable to reach minimum height within 25 seconds	1) Check unload solenoid installation 2) Check the hydraulic pressure 3) Disconnect implement
U11	Unable to calibrate suspension	1) The lockout switch was pressed more than 3 times to initiate calibration 2) Check the suspension mechanics 3) Check the hydraulic pressure
U12	ACP stopped, vehicle not stationary	1) Handbrake not applied 2) Rear axle speed sensor faulty
U13	Valve 30 (upper lockout) solenoid open circuit	1) Check the wiring harness
U14	Valve 31 (lower lockout) solenoid open circuit	1) Check the wiring harness
U15	Valve 30 (upper lockout) and Valve 31 (lower lockout) solenoid connectors swapped	1) Check the wiring harness
U16	Valve 30 (upper lockout) and Valve 31 (lower lockout) current sense inputs swapped	1) Check the wiring harness
U17	Front suspension pressure switch open circuit	1) Check the wiring harness
U18	Front suspension pressure switch short circuit	1) Check the wiring harness

Rear Electronic Hydraulic Remote Valves Calibration 'U' Error Codes

Code	Description	Possible Failure
U61	Lever No.1 not in neutral	–
U62	Lever No.2 not in neutral	–
U63	Lever No.3 not in neutral	–
U64	Lever No.4 not in neutral	–

https://tractormanualz.com/

Front Hitch Calibration 'U' Error Codes

Code	Description	Possible Failure
U110	Position potentiometer value too low or the hitch is not raised	Hitch was not raised before height limit control was changed from ON to OFF position

Steering Calibration 'U' Error Codes

Code	Description	Possible Failure
U19	Oil temperature below **5 °C**	1) Open circuit for the temperature sensor input to the transmission module 2) Faulty temperature sensor Note: Use the H9 menu in the transmission module to see if the temperature sensor input is okay
U21	ERPM is below 1300, increase throttle	1) Operator has not set the correct engine speed 2) Open circuit for the engine speed sensor going to the cluster – mechanical engines only 3) Instrument cluster is not powered 4) Broken CAN bus Note: Use the HE menu to see if the engine speed is being detected
U71	Calibration attempted while enable switch is off	1) The enable switch is in the off position 2) The enable switch is in the on position at start up but needs to be cycled through off then on to enable the system
U72	Proximity sensor input is out of range – open	1) Incorrect position of steering wheel 2) Faulty proximity sensor 3) Check the proximity sensor connection
U73	Proximity sensor input is out of range – closed	1) Incorrect position of steering wheel 2) Faulty proximity sensor 3) Check the proximity sensor connection
U74	LVDT calibration has been unsuccessful (out of range after 4th attempt)	1) Faulty LVDT sensor 2) Faulty steering hydraulic valve 3) Incorrect assembly of hydraulic valve 4) Check the LVDT sensor connection

EPL Calibration 'U' Error Codes

Code	Description	Possible Failure
U114	Hand brake applied	1) Blue cable (on the handbrake switch connector) cut off 2) Mismatch between the handbrake switch status hardwired to the EPL and the VCU_HB_SWITCH parameter in the VCU2EPL CAN message
U115	Shuttle lever not in the park position	1) Pins A4 or C7 of the EPL module short to ground 2) Pins A4 or C7 of the EPL module cut off 3) Pins A4 or C7 of the EPL module short to supply voltage 4) Shuttle lever damaged
U116	APP position too high	1) Wrong mechanical adjustment of the EPL transmission lever 2) Possible wear in the braking pads
U117	APP position too low	1) Stiffness of the system is too high – possible mechanical interferences 2) Wrong mechanical installation of the EPL
U118	Error codes active preventing completion of initialization procedure	1) High recovery level error code is being activated
U119	Bowden cable not connected	1) Bowden cable not connected
U120	Inclinometer self test failed	1) Inclinometer broken
U121	Inclinometer calibration procedure not OK	–
U122	Inclinometer offset out of range	1) Check the inclinometer installation 2) Vehicle not on flat ground 3) Remove any rear attachment 4) Incorrect wheels could be installed

https://tractormanualz.com/

Code	Description	Possible Failure
U123	Vehicle moving	1) Vehicle not stationary 2) Vehicle speed sensor failed

https://tractormanualz.com/

Index

DISTRIBUTION SYSTEMS - A

ELECTRONIC SYSTEM - 50.A

Control module - Electronic schema Electronic Park Lock (EPL) - Module XA 190
Control module - Electronic schema Central Control Unit (RE module) 192
Control module - Electronic schema Auxiliary Control Unit (RM module) 194
Control module - Electronic schema Arm Rest Control Unit (LC module) 196
Control module - Electronic schema Small Wide Colour Display 198
Control module - Electronic schema Radio and Hands Free module 200
Control module - Electronic schema Tractor Electronic Control Unit (TECU) 202
Control module - Electronic schema Automatic Temperature Control 204
Control module - Electronic schema Fast Steer (KA Module) 206
Control module - Electronic schema Engine control Module (EDC 16) 208
Control module - Electronic schema Auto Guidance Module 210
Control module - Electronic schema Electro-Hydraulic Remotes 212
Control module - Configure - CVT Transmission, Electronic Draft Control, Rear PTO, Front Wheel Drive, Differential Lock, Front Electronic Hydraulic Remote Valves, Engine. 76
Control module - Configure Armrest 155
Control module - Configure - Front Axle Suspension, Rear Electronic Hydraulic Remote Valves, Front PTO, Front Hitch 34
Control module - Configure Electronic Park Lock (EPL) 167
Control module - Configure H-Menu Overview 3
Control module - Configure Instrument Cluster 11
Control module - Configure KA - Steering Control 135
Control module - Electronic schema Instrument Cluster - ICU3 Module IE 188
Control module - Fault code index 215
ELECTRONIC SYSTEM - Calibrate ’U’ Code Listing 234

https://tractormanualz.com/

DISTRIBUTION SYSTEMS - A

FAULT CODES - 50.A

Puma 165 CVX
Puma 180 CVX
Puma 195 CVX
Puma 210 CVX
Puma 225 CVX

https://tractormanualz.com/

Contents

DISTRIBUTION SYSTEMS - A

FAULT CODES - 50.A

FUNCTIONAL DATA
ELECTRONIC SYSTEM
Fault code index 3

https://tractormanualz.com/

ELECTRONIC SYSTEM - Fault code index

Reference	Description	Controller
10001	Upper Lockout Solenoid Error	
10002	Raise Solenoid Error	
10003	Lower Solenoid Error	
10004	Front Axle Position Sensor Threshold Higher Than Set Limit	
10005	Front Axle Position Sensor Threshold Lower Than Set Limit	
10008	Go Down Error - Suspension Unable to Return to Set Point	
10009	Lower Lockout Solenoid Error	
10010	Chassis Accelerometer - Voltage too Low (Short to Ground or Open Circuit)	
10011	Chassis Accelerometer - Voltage Too High (Short Circuit to 5V)	
10024	Front Suspension Not Calibrated	
1002	Radar Disconnected	
1003	Speed Sensor Error	
1004	Wheel Speed Sensor Signal Too High	
1008	Raise / Work Switch Failure (Command Arm)	
1009	Both External Switches Operated At The Same Time	
1014	Right Hand Load Sensing Pin Signal Too Low	
1015	Right Hand Load Sensing Pin Signal Too High	
1016	Left Hand Load Sensing Pin Signal Too Low	
1017	Left Hand Load Sensing Pin Signal Too High	
1018	Both Load Sensing Pins Disconnected	
1019	Load Sensing Pin 8V Reference Voltage Too Low	
1020	Load Sensing Pin 8V Reference Voltage Too High	
1024	Perform The Hydraulic Lift Calibration	
1027	Lift Arm Position Sensing Control Voltage Too Low	
1028	Lift Arm Position Sensing Control Voltage Too High	
1029	Hydraulic Control Valve Disconnected	
1030	Signal Ground Open Circuit	
1031	Chassis Harness Disconnected	
1049	Hydro In Sensor Open Circuit Or Short Circuit To Ground	
1053	5 Volt Reference Short to +12V	
1054	5 Volt Reference Short To Ground	
1059	8 Volt Reference Error (Draft Load Pins)	
1063	EDC Hydraulic Valve Lower Solenoid Open Circuit	
1064	EDC Hydraulic Valve Raise Solenoid Open Circuit	

https://tractormanualz.com/

Reference	Description	Controller
1065	EDC Hydraulic Valve Lower Solenoid Short Circuit	
1066	EDC Hydraulic Valve Raise Solenoid Short Circuit	
1067	Hydraulic Valve Supply Voltage Voltage Too Low	
1068	Height Limit Control Not Set To Maximum During Calibration	
1070	Hydraulic Ram Configuration Not Set	
12011	Power Stage - Overvoltage Protection	
12012	Power Stage - PH_A Open Circuit Or PH_B Open Circuit, Motor Open	
12013	Power Stage - PH_A Or PH_B Short To Ground	
12014	Power Stage - PH_A Or PH_B Short To Vbatt	
12017	Power Stage - Internal Service Voltage (Vr) Not Viable	
12018	Power Stage - Current Over Absolute Range / Motor Short	
12019	Power Stage - Current Over Dynamic Set Point	
12020	Power Stage - Unexpected Current	
12024	Ignition Key - Key Hardware Vs CAN Signals Coherence Check	
12032	Encoder - Hardware Fault On Power Supply	
12033	Encoder Virtual Peripheral Failure (XGATE) Wrong Sequence, Interrupt	
12034	Encoder Function Not Available (A Or B Signal Not Available)	
12043	Inclinometer - Self Test	
12052	Battery Lower Than 9V	
12053	Battery - Higher Than 16V	
12054	Battery - Out Of Range / Spike Diagnosis	
12066	Trailer Relay - Open Wire / Load And Output Short To Vbatt	
12068	Trailer Relay - Output Short To Ground	
12073	Output Status - Output Incongruence Vs Input (DIO And Frequency) & Protection	
12132	CAN - Bus OFF	
12133	CAN - Mute	
12142	CAN - VCU_TRAIL_BRAKE_INH Error / Not Available	
12143	CAN - VCU_VEH_DIRECTION Error / Not Available	
12144	CAN - VEH_SPEED Error / Not Available	
12145	CAN - VCU_CMD Error / Not Available	
12146	CAN- VCU_KEY_OFF_AA_INH Error / Not Available	
12147	CAN - ENGINE _RPM Error / Not Available	
12148	CAN - VCU_KEY Error / Not Available	

https://tractormanualz.com/

Reference	Description	Controller
12150	CAN - VCU_HB_SWITCH Error / Not Available	
12151	Logic Core - Second Microprocessor Not Present	
12160	Logic Core - EEPROM Check	
12162	ACU Temperature - Out Of Range / Spike Diagnosis	
12163	ACU Temperature - Power Stage Over Temperature	
12172	Actuator - Cable Disconnection	
12183	Actuator Moving Without Command	
12184	Actuator Endstop Zone Reached	
12185	Actuator - Actuation Timeout (Energy) Expired	
12188	Actuator - Excess Pad Wear	
12192	Shuttle Park Invalid Status	
12202	Hand Brake Switch Incongruence	
12212	Factory - Accelerometer Not Calibrated	
12213	Factory - Actuator Not Initialised	
12214	Factory - Disable Actuation	
12215	Factory - Trailer Relay Present, But Not Configured	
14013	Steering Angle Sensor - Short Circuit to VCC	
14014	Steering Angle Sensor - Short Circuit to Ground or Open Circuit	
14015	5V Supply Voltage - Too High	
14016	5V Supply Voltage - Too Low	
14021	Cranking Line - Shorted to +12V	
14022	Cranking Line - Shorted to Ground	
14051	Fuel Level Sensor Open Circuit Or Short To High Voltage	
14052	Fuel Level Sensor Short To Ground	
14061	Air Brake Pressure Sensor - Short Circuit to VCC or Option Set But Sensor Not Connected	
14095	Vane Pump Pressure Transducer - Short Circuit To Ground	
14096	Vane Pump Pressure Transducer - Short Circuit To VCC Or Open Circuit	
14100	Air Brake Option Needs To Be Set	
14102	SWCD - Present But Not Configured	
14104	Electronic Front Hitch Present But Not Configured	
14105	Electronic Park Lock (EPL) Present But Not Configured	
14106	Steering Sensor Present But Not Configured	
14300	Electronic Park Lock - Mismatch Between CAN and Direct Frequency Input Info	
14301	Electronic Park Lock - Direct Frequency Input Shorted To VCC Or Open Circuit	
14304	Electronic Park Lock - Status Not Validated	

https://tractormanualz.com/

Reference	Description	Controller
14900	Transmission Controller Missing (RE/RN)	
14901	Engine Controller Missing (EDC16)	
14902	Auxiliary Controller Missing (RW/RN)	
14904	Armrest Controller Missing (LC)	
14905	Keypad Missing (JA)	
14906	Steering Controller Missing (KA)	
14908	TECU Missing (OA)	
14909	SWCD Missing (VA)	
14910	Climate Controller Missing	
14914	Electronic Park Lock (EPL) Controller Missing	
14920	Configuration Error	
15002	Steering Wheel Control Proximity Sensor Open Circuit.	
15003	Steering Wheel Control Proximity Sensor - Short Circuit	
15006	Split Valve LVDT - Open Circuit	
15007	Split Valve LVDT - Short Circuit	
15008	Change Valve Solenoid - Open Circuit	
15009	Change Valve Solenoid - Short Circuit Across	
15010	Safety Switch Fail	
15011	Maximum Engagement Time Elapsed (5 Minutes)	
15012	Split Valve Spool - Stuck Open	
15013	Change Valve Or Split Valve Spools - Stuck Closed	
15014	Split Valve Spool Stuck in Transition Zone - Unable to Identify Steering Mode	
15024	System Not Calibrated	
16111	Cab Sensor Open Or Shorted To Power	
16112	Cab Sensor Shorted To Ground	
16113	Outlet Sensor Open Or Shorted To Power	
16114	Outlet Sensor Open Or Shorted To Ground	
16115	Evaporator Sensor Open Or Shorted To Power	
16116	Evaporator Sensor Shorted To Ground	
16117	Outside Air Sensor Open Or Shorted To Power	
16118	Outside Air Sensor Shorted To Ground	
16120	Blower Speed Select Potentiometer Open Or Shorted To Power	
16121	Temperature Select Potentiometer Open Or Shorted To Power	
16122	Mode Select Potentiometer Open Or Shorted To Power	
16125	High Pressure Switch (+) Input Shorted To Power	
16126	High Pressure Switch (+) Input Shorted To Ground	

https://tractormanualz.com/

Reference	Description	Controller
16127	High Pressure Switch (-) Input Shorted To Power	
16128	High Pressure Switch (-) Input Shorted To Ground	
16129	High Pressure Cycling Error (2 in 1 Minute)	
16130	Low Pressure Switch (+) Input Shorted To Power	
16131	Low Pressure Switch (+) Input Shorted To Ground	
16132	Low Pressure Switch (-) Input Shorted To Power	
16133	Low Pressure Switch (-) Input Shorted To Ground	
16134	Low Pressure Switch Open For Greater Than 1 Minute	
18001	Hand Throttle Number 1 - Voltage Too Low	
18002	Hand Throttle Number 1 - Voltage Too High	
18003	Hand Throttle Number 2 - Voltage Too Low	
18004	Hand Throttle Number 2 - Voltage Too High	
18007	Multi-function Handle - Switch Error	
18008	Multi-function Handle - Voltage Too Low	
18009	Multi-function Handle - Voltage Too High	
18010	Powershift Throttle - Voltage Too Low	
18011	Powershift Throttle - Voltage Too High	
18012	CVT Mode Switch Error	
18013	Multi-function Handle - Encoder Position Error	
18014	Rear Hitch Position Control Potentiometer - Voltage Too Low	
18015	Rear Hitch Position Control Potentiometer - Voltage Too High	
18016	Rear Hitch Draft Control Potentiometer - Voltage Too Low	
18017	Rear Hitch Draft Control Potentiometer - Voltage Too High	
18018	Rear Hitch Height Limit Potentiometer - Voltage Too Low	
18019	Rear Hitch Height Limit Potentiometer - Voltage Too High	
18020	Rear Hitch Drop Rate Potentiometer - Voltage Too Low	
18021	Rear Hitch Drop Rate Potentiometer - Voltage Too High	
18022	Rear Hitch Sensitivity Control Potentiometer - Voltage Too Low	
18023	Rear Hitch Sensitivity Control Potentiometer - Voltage Too High	
18024	EHR Flow Encoder Position Error	
18025	Rear Hitch Slip Control Potentiometer - Voltage Too Low	

https://tractormanualz.com/

Reference	Description	Controller
18026	Rear Hitch Slip Control Potentiometer - Voltage Too High	
18027	EHR 5 Lever Position - Voltage Too Low	
18028	EHR 5 Lever Position - Voltage Too High	
18029	EHR 6 Lever Position - Voltage Too Low	
18030	EHR 6 Lever Position - Voltage Too High	
18031	Front Hitch Position / Pressure Control Potentiometer - Voltage Too High	
18032	Front Hitch Position / Pressure Control Potentiometer - Voltage Too Low	
18033	Front Hitch Position / Pressure Mix Potentiometer - Voltage Too High	
18034	Front Hitch Position / Pressure Mix Potentiometer - Voltage Too Low	
18035	Front Hitch Position Height Limit Potentiometer - Voltage Too High	
18036	Front Hitch Height Limit Potentiometer - Voltage Too Low	
18037	Front Hitch Height Limit Enable Switch Error	
18038	Front Hitch Position Drop Rate Potentiometer - Voltage Too High	
18039	Front Hitch Position Drop Rate Potentiometer - Voltage Too Low	
18040	EHR 1 Lever Position - Voltage Too Low	
18041	EHR 1 Lever Position - Voltage Too High	
18042	EHR 2 Lever Position - Voltage Too Low	
18043	EHR 2 Lever Position - Voltage Too High	
18044	EHR 3 Lever Position - Voltage Too Low	
18045	EHR 3 Lever Position - Voltage Too High	
18046	EHR Float Control Switch Error	
18047	EHR 4 Lever Position - Voltage Too Low	
18048	EHR 4 Lever Position - Voltage Too High	
18049	Joystick 1 X-Axis Position - Voltage Too Low	
18050	Joystick 1 X-Axis Position - Voltage Too High	
18051	Joystick 1 Y-Axis Position - Voltage Too Low	
18052	Joystick 1 Y-Axis Position - Voltage Too High	
18053	Joystick 1 Proportional Rocker Switch - Voltage Too Low	

https://tractormanualz.com/

Reference	Description	Controller
18054	Joystick Proportional Rocker Switch - Voltage Too High	
18055	Joystick 2 X-Axis Position - Voltage Too Low	
18056	Joystick 2 X-Axis Position - Voltage Too High	
18057	Joystick 2 Y-Axis Position - Voltage Too Low	
18058	Joystick 2 Y-Axis Position - Voltage Too High	
18059	Joystick 2 Proportional Rocker Switch - Voltage Too Low	
18060	Joystick 2 Proportional Rocker Switch - Voltage Too High	
18061	Reference Voltage - Short Circuit To Ground	
18062	Reference Voltage - Short Circuit To 12V	
18063	EEEPROM Error	
18064	Multi-function Handle Communication Error	
18065	Multi-function Handle Basic Assurance Test Error	
18066	EHR 1 Lever Implausibility Error	
18067	EHR 2 Lever Implausibility Error	
18068	EHR 3 Lever Implausibility Error	
18069	EHR 4 Lever Implausibility Error	
2007	Low Power 5V Reference - Voltage Too Low	
2008	Low Power 5V Reference - Voltage Too High	
2009	Seat Switch Input - Voltage Too Low	
2010	Seat Switch Input - Voltage Too High	
2011	Clutch Pedal Potentiometer - Voltage Too Low	
2012	Clutch Pedal Potentiometer - Voltage Too High	
2021	Transmission Harness Disconnected	
2024	All Clutches Not Calibrated	
2025	Synchronizers Not Calibrated	
2026	Engine Speed Too High	
2027	Engine Speed Too Low / No Signal	
2035	Dump Solenoid - Short To 12V	
2036	Dump Solenoid - Short To Ground Or Open Circuit	
2037	Clutch Pedal Disconnect Switch - Open Circuit	
2046	Fuse Sense Input - Open Circuit	
2047	Clutch Pedal Disconnect Switch Set Too High	
2048	Clutch Pedal Disconnect Switch Set Too Low	
2049	Wheel Speed (Transmission Output Speed) Sensor - Short To Ground Or Open Circuit	
2050	Wheel Speed (Transmission Output Speed) Sensor - Short To 12V	

https://tractormanualz.com/

Reference	Description	Controller
2051	Oil Temperature Sensor Open Circuit	
2052	Oil Temperature Sensor - Short Circuit	
2053	5 Volt Reference Voltage Too High	
2054	5 Volt Reference Voltage Too Low	
2055	Wheel Speed (Transmission Output Speed) Sensor - No Signal	
2059	Shuttle Lever Switch Disagreement	
2070	Shuttle Lever Forward Switch Voltage Too High	
2071	Shuttle Lever Forward Switch Voltage Too Low	
2072	Shuttle Lever Reverse Switch Voltage Too High	
2073	Shuttle Lever Reverse Switch Voltage Too Low	
2075	Flywheel Speed Sensor Signal Error	
2076	Flywheel Speed Sensor Open Circuit	
2077	Flywheel Speed Sensor - Short Circuit	
2079	Flywheel Speed Sensor - No Signal	
2124	Flywheel Speed Sensor Not Calibrated	
2303	Damper Calibration - Low Error	
2304	Damper Calibration - High Error	
2331	Clutch Slipping fault	
2342	Clutch A Solenoid - Open Circuit Or Short Circuit To Ground	
2343	Clutch B Solenoid - Open Circuit Or Short Circuit To Ground	
2352	Clutch A Solenoid - Voltage Too High	
2353	Clutch B Solenoid - Voltage Too High	
2362	Clutch A Not Calibrated	
2363	Clutch B Not Calibrated	
2380	Parklock - Unable To Reach Desired Position	
2381	Parklock - Bus Off	
2382	Parklock - Bus Integrity Error	
2501	Oil Pressure Sensor - Open Circuit Or Short Circuit To Ground	
2502	Oil Pressure Sensor - Short Circuit To +5V	
2503	Clutch A Solenoid - In Use An Open Circuit Or Short Circuit To Ground	
2504	Clutch B Solenoid - In Use An Open Circuit Or Short Circuit To Ground	
2505	Clutch A Pressure Not Plausible	
2506	Clutch B Pressure Not Plausible	
2507	F1/F3 Synchro Potentiometer - Signal Too High	
2508	F1/F3 Synchro Potentiometer - Signal Too Low	
2509	Synchro Not Moving Towards F1	
2510	Synchro Not Moving Towards F3	
2511	F1 Solenoid Open Circuit Or Short Circuit To Ground	

https://tractormanualz.com/

Reference	Description	Controller
2512	F3 Solenoid Open Circuit Or Short Circuit To Ground	
2513	F1 Solenoid Circuit Fault	
2514	F3 Solenoid Circuit Fault	
2517	F2/R1 Synchro Potentiometer - Signal Too High	
2519	Synchro Not Moving Towards F2	
2520	Synchro Not Moving Towards R1	
2521	F2 Solenoid Open Circuit Or Short Circuit To Ground	
2522	R1 Solenoid Open Circuit Or Short Circuit To Ground	
2523	F2 Solenoid Circuit Fault	
2524	R1 Solenoid Circuit Fault	
2527	F4/R2 Synchro Potentiometer - Signal Too High	
2528	F4/R2 Synchro Potentiometer - Signal Too Low	
2529	Synchro Not Moving Towards F4	
2530	Synchro Not Moving Towards R2	
2531	F4 Solenoid Open Circuit Or Short Circuit To Ground	
2532	R2 Solenoid Open Circuit Or Short Circuit To Ground	
2533	F4 Solenoid Circuit Fault	
2534	R2 Solenoid Circuit Fault	
2536	Hydro In Sensor - Open Circuit Or Short Circuit To Ground	
2537	Hydro In Sensor - Short To 12V	
2538	Ring Speed Sensor - Short To Ground Or Open Circuit	
2539	Ring Speed Sensor - Short To 12V	
2540	A Clutch Pressure Transducer - Open Circuit Or Short To Ground	
2541	B Clutch Pressure Transducer - Open Circuit Or Short To Ground	
2542	A Clutch Pressure Transducer - Short Circuit To 5V	
2543	B Clutch Pressure Transducer - Short Circuit To 5V	
2544	Ring Speed Sensor Critical Air Gap	
2545	ORPM Sensor Critical Air Gap	
2546	No Signal From Hydro In Sensor	
2547	No Signal From Ring Sensor	
2548	Brake Pressure Transducer - Open Circuit Or Short To Ground	
2549	Brake Pressure Transducer - Short To 5V	
2552	Transmission Oil Pressure Too High	
2553	Transmission Oil Pressure Too Low	
2557	Hydro 1 Solenoid - Open Circuit Or Short Circuit To Ground	
2558	Hydro 1 Solenoid - Short Circuit To 12V	
2559	ORPM And Ring Fault	
3001	Foot Throttle Sensor - Signal Not Plausible	

https://tractormanualz.com/

Reference	Description	Controller
3002	Foot Throttle Sensor - Signal Above Range Maximum	
3003	Foot Throttle Sensor - Signal Below Range Minimum	
3010	Air Intake Temperature Sensor - Signal Above Range Maximum	
3011	Air Intake Temperature Sensor - Signal Below Range Minimum	
3028	Oil Pressure Too Low	
3038	Constant Engine RPM Activate/Select Switch - Short Circuit to Battery	
3047	Main Relay Failure - Short Circuit To Battery	
3048	Main Relay Failure - Short Circuit to Ground	
3088	Crankshaft Sensor - No Signal	
3090	Camshaft Sensor - No Signal	
3091	Camshaft Sensor - Invalid Signal	
3096	CAN A LINE NO SIGNAL	
3107	Fuel Metering Unit - Short Circuit To Battery	
3108	Fuel Metering Unit - Short Circuit To Ground	
3111	Rail Pressure Sensor Monitoring - Signal Above Range Maximum	
3120	PTO Twist Sensor - Not Plausible	
3121	PTO Twist Sensor - Open Circuit	
3122	PTO Twist Sensor - Short Circuit To Ground	
3123	PTO Twist Sensor - Not Calibrated	
3124	Hand Throttle - Signal Above Range Maximum	
3125	Hand Throttle - Channel 2 Signal Below Range Minimum	
3126	Hand Throttle - Channel 1 Signal Above Range Maximum	
3127	Hand Throttle - Channel 1 Signal Below Range Minimum	
3128	Hand Throttle - Channel Difference Error	
3129	Hand Throttle - Idle Switch Closed Circuit	
3130	Hand Throttle - Idle Switch Open Circuit	
3138	Metering Unit - Temperature Too High	
3141	Fuel Flow Setpoint Too Low	
3142	High Pressure Test - Test Active	
3145	Terminal 15 - No Signal	
3148	Coolant Temperature Sensor Dynamic Test - Failure	
3157	ECM Not Detected On CAN Bus	
3158	Invalid ECM Checksum	
3159	Invalid Engine Reference Torque	
3160	Fan Actuator - Short Circuit to Battery	
3162	Fan Actuator - Open Load	
3163	Fan Actuator - No Load	

https://tractormanualz.com/

Reference	Description	Controller
3176	Setpoint Of Metering Unit Not Plausible In Overrun	
3177	Engine Overspeed Detected	
3182	Timeout Of CAN Message RxCCVS	
3185	Timeout Of CAN Message TF	
3238	Engine Controller Internal SPI Communication Error	
3239	Engine Controller EEPROM - Read Operation Error	
3240	Engine Controller EEPROM - Write Operation Failure	
3241	Engine Controller EEPROM - Default Value Used	
3249	TPU Monitoring - Time Deviation Between TPU And System Not Plausible	
3250	Dataset - Variant Defect	
3251	Dataset - Requested Variant Could Not Be Set	
3252	Controller Watchdog - SPI Comunication Failure	
3263	CAN C Line No Signal	
3265	Overrun Monitoring	
3266	Redundant Engine Speed in Overrun Monitoring	
3297	Rail Pressure Positive Deviation High And High Fuel Flow Setpoint Value	
3301	Rail Pressure Negative Deviation Too High On Minimum Metering	
3305	Rail Pressure Below Minimum Limit In Controller Mode	
3309	Rail Pressure Above Maximum Limit In Controlled Mode	
3313	Rail Pressure Drop Rate Too High	
3316	Minimum Number Of Injections Not Reached - Stop Engine	
3334	Timeout Of CAN Message TCS1-PE Torque - When Active	
3335	Timeout Of CAN Message TSC1-PE Torque - When Inactive	
3338	Timeout Of CAN Message TSC1-VE Speed - When Inactive	
3339	Timeout Of CAN Message TSC1-VE Speed - When Active	
3345	Total Throttle Failure	
3367	Coolant Temperature Test Failure	
3368	Torque Limitation Due To OBD Performance Limiter By Legislation	
3369	Torque Reduction Due To Smoke Reduction	
3370	Torque Limitation Due To Engine Protection (Against Excessive Torque, Engine Overspeed And Overheat)	
3375	Constant Engine RPM Increase / Decrease Switch - Open Circuit	
3999	Unknown ECM SPN Error Code	

https://tractormanualz.com/

Reference	Description	Controller
4100	Rear Remote No.1 No Control Message Received	
4101	Rear Remote No.1 Control Message Not Plausible	
4102	Rear Remote No.1 EEPROM Error	
4103	Rear Remote No.1 Switched To Failsafe	
4104	Rear Remote No.1 Under Voltage	
4105	Rear Remote No.1 Over Voltage	
4107	Rear Remote No.1 Spool Movement Too High	
4107	Rear Remote No.1 Spool Movement Too High	
4108	Rear Remote No.1 Float Position Not Reached	
4109	Rear Remote No.1 Manually Operated	
4110	Rear Remote No.1 Driver Faulty	
4111	Rear Remote No.1 Potentiometer Faulty	
4112	Rear Remote No.1 Unable To Reach Neutral	
4113	Rear Remote No.1 Spool Not In Neutral At Key On	
4114	Rear Remote No.2 No Control Message Received	
4115	Rear Remote No.2 Control Message Not Plausible	
4116	Rear Remote No.2 EEPROM Error	
4117	Rear Remote No.2 Switched To Failsafe	
4118	Rear Remote No.2 Under Voltage	
4119	Rear Remote No.2 Over Voltage	
4120	Rear Remote No.2 Spool Movement Too Low	
4121	Rear Remote No.2 Spool Movement Too High	
4122	Rear Remote No.2 Float Position Not Reached	
4123	Rear Remote No.2 Manually Operated	
4124	Rear Remote No.2 Driver Faulty	
4125	Rear Remote No.2 Potentiometer Faulty	
4126	Rear Remote No.2 Unable To Reach Neutral	
4127	Rear Remote No.2 Spool Not In Neutral At Key On.	
4128	Rear Remote No.3 No Control Message Received	
4129	Rear Remote No.3 Control Message Not Plausible	
4130	Rear Remote No.3 EEPROM Error	
4131	Rear Remote No.3 Switched To Failsafe	
4132	Rear Remote No.3 Under Voltage	
4133	Rear Remote No.3 Over Voltage	

https://tractormanualz.com/

Reference	Description	Controller
4134	Rear Remote No.3 Spool Movement Too Low	
4135	Rear Remote No.3 Spool Movement Too High	
4136	Rear Remote No.3 Float Position Not Reached	
4137	Rear Remote No.3 Manually Operated	
4138	Rear Remote No.3 Driver Faulty	
4139	Rear Remote No.3 Potentiometer Faulty	
4140	Rear Remote No.3 Unable To Reach Neutral	
4141	Rear Remote No.3 Spool Not In Neutral At Key On	
4142	Rear Remote No.4 No Control Message Received	
4143	Rear Remote No.4 Control Message Not Plausible	
4144	Rear Remote No.4 EEPROM Error	
4145	Rear Remote No.4 Switched To Failsafe	
4146	Rear Remote No.4 Under Voltage	
4147	Rear Remote No.4 Over Voltage	
4148	Rear Remote No.4 Spool Movement Too Low	
4149	Rear Remote No.4 Spool Movement Too High	
4150	Rear Remote No.4 Float Position Not Reached	
4151	Rear Remote No.4 Manually Operated	
4152	Rear Remote No.4 Driver Faulty	
4153	Rear Remote No.4 Potentiometer Faulty	
4154	Rear Remote No.4 Unable To Reach Neutral	
4155	Rear Remote No.4 Spool Not In Neutral At Key On	
4156	Rear Remote No.5 No Control Message received	
4157	Rear Remote No.5 Control Message Not Plausible	
4158	Rear Remote No.5 EEPROM Error	
4159	Rear Remote No.5 Switched To Failsafe	
4160	Rear Remote No.5 Under Voltage	
4161	Rear Remote No.5 Over Voltage	
4162	Rear Remote No.5 Spool Movement Too Low	
4163	Rear Remote No.5 Spool Movement Too High	
4164	Rear Remote No.5 Float Position Not Reached	
4165	Rear Remote No.5 Manually Operated	
4166	Rear Remote No.5 Driver Faulty	

https://tractormanualz.com/

Reference	Description	Controller
4167	Rear Remote No.5 Potentiometer Faulty	
4168	Rear Remote No.5 Unable To Reach Neutral	
4169	Rear Remote No.5 Spool Not In Neutral At Key On	
4170	Rear EHR Control No.1 Not Calibrated	
4173	Rear EHR Control No.2 Not Calibrated	
4177	Rear EHR Control No.3 Not Calibrated	
4180	Rear EHR Control No.4 Not Calibrated	
4190	Rear Remote No.1 No Communications	
4191	Rear Remote No.2 No Communications	
4192	Rear Remote No.3 No Communications	
4193	Rear Remote No.4 No Communications	
4198	Rear Remote No.5 No Communications	
4216	Rear Remote No.1 - Spool Not Calibrated	
4217	Rear Remote No.2 - Spool Not Calibrated	
4218	Rear Remote No.3 - Spool Not Calibrated	
4219	Rear Remote No.4 - Spool Not Calibrated	
4220	Rear Remote No.5 - Spool Not Calibrated	
4500	Front Remote No.1 - No Control Message Received	
4501	Front Remote No.1 Control Message Not Plausible	
4502	Front Remote No.1 EEPROM Error	
4503	Front Remote No.1 Switched To Failsafe	
4504	Front Remote No.1 Under Voltage	
4505	Front Remote No.1 Over Voltage	
4506	Front Remote No.1 Spool Movement Too Low	
4507	Front Remote No.1 Spool Movement Too High	
4508	Front Remote No.1 Float Position Not Reached	
4509	Front Remote No.1 Manually Operated	
4510	Front Remote No.1 Driver Faulty	
4511	Front Remote No.1 Potentiometer Faulty	
4512	Front Remote No.1 Unable To Reach Neutral	
4513	Front Remote No.1 Spool Not In Neutral At Key On	

https://tractormanualz.com/

Reference	Description	Controller
4514	Front Remote No.2 No Control Message Received	
4515	Front Remote no.2 Control Message Not Plausible	
4516	Front Remote No.2 EEPROM Error	
4517	Front Remote No.2 Switched To Failsafe	
4518	Front Remote No.2 Under Voltage	
4519	Front Remote No.2 Over Voltage	
4520	Front Remote No.2 Spool Movement Too Low	
4521	Front Remote No.2 Spool Movement Too High	
4522	Front Remote No.2 Float Position Not Reached	
4523	Front Remote No.2 Manually Operated	
4524	Front Remote No.2 Driver Faulty	
4525	Front Remote No.2 Potentiometer Faulty	
4526	Front Remote No.2 Unable To Reach Neutral	
4527	Front Remote No.2 Spool Not In Neutral At Key On	
4528	Front Remote No.3 No Control Message Received	
4529	Front Remote No.3 Control Message Not Plausible	
4530	Front Remote No.3 EEPROM Error	
4531	Front Remote No.3 Switched To Failsafe	
4532	Front Remote No.3 Under Voltage	
4533	Front Remote No.3 Over Voltage	
4534	Front Remote No.3 Spool Movement Too Low	
4535	Front Remote No.3 Spool Movement Too High	
4536	Front Remote No.3 Float Position Not Reached	
4537	Front Remote No.3 Manually Operated	
4538	Front Remote No.3 Driver Faulty	
4539	Front Remote No.3 Potentiometer Faulty	
4540	Front Remote No.3 Unable To Reach Neutral	
4541	Front Remote No.3 Spool Not In Neutral At Key On	
4542	Front Remote No.4 No Control Message Received	
4543	Front Remote No.4 Control Message Not Plausible	
4544	Front Remote No.4 EEPROM Error	
4545	Front Remote No.4 Switched To Failsafe	
4546	Front Remote No.4 Under Voltage	
4547	Front Remote No.4 Over Voltage	

https://tractormanualz.com/

Reference	Description	Controller
4548	Front Remote No.4 Spool Movement Too Low	
4549	Front Remote No.4 Spool Movement Too High	
4550	Front Remote No.4 Float Position Not Reached	
4551	Front Remote No.4 Manually Operated	
4552	Front Remote No.4 Driver Faulty	
4553	Front Remote No.4 Potentiometer Faulty	
4554	Front Remote No.4 Unable To Reach Neutral	
4555	Front Remote No.4 Spool Not In Neutral At Key On	
4560	Front RemoteNo.1 No Communications	
4561	Front Remote No.2 No Communications	
4562	Front Remote No.3 No Communications	
4563	Front Remote No.4 No Communications	
4565	High Flow Pump Connection Error	
4566	High Flow Pump Configuration Error	
5003	Rear PTO Brake Solenoid Output Open Circuit	
5005	Rear PTO Brake Switch Open Circuit	
5007	Rear PTO Solenoid Stuck Off	
5008	Rear PTO Solenoid - Open Circuit	
5010	PTO Shift Motor - Open Circuit	
5011	PTO Shift Motor - Short Circuit	
5012	PTO Shift - Sensor Error	
5013	PTO Shift Switch - Open Circuit	
5014	PTO Shift Switch - Short Circuit	
5027	Rear PTO Speed Sensor - Open Circuit	
5033	Rear PTO Cab Normally Closed Switch Open Circuit	
5034	Rear PTO Fender Switch Open Circuit / Short To Ground	
5035	Rear PTO Fender Switch Input Short To 12V+	
5037	Rear PTO Cab Normally Open Switch - Stuck Closed	
5042	PTO Management Switch - Stuck Closed	
5043	Rear PTO Fender Switch Stuck On	
5044	Rear PTO Speed Sensor - Short To Ground	
5098	Rear PTO Fender Switch Option Not Enabled	
6023	Four Wheel Drive Solenoid Open Circuit	
7017	Differential Lock Solenoid - Open Circuit	
7024	Steering Angle Sensor Not Calibrated	

https://tractormanualz.com/

Reference	Description	Controller
7032	Steering Angle Sensor - Signal Too Low	
8007	Front PTO Solenoid - Stuck On	
8008	Front PTO Solenoid - Open Circuit	
8033	Front PTO Switch In Cab Normally Closed Open Circuit	
8037	Front PTO Cab Normally Open Switch Stuck Closed	
8099	Front PTO Option Not Enabled	
9001	Front Hitch Position Sensor - Short Circuit To 12V	
9002	Front Hitch Position Sensor - Open Circuit Or Short To Ground	
9003	Front Hitch Fender Up Switch Error	
9004	Front Hitch Fender Down Switch Error	
9005	Front Hitch Fender Common Switch Error	
9006	Front Hitch Position Potentiometer - Not Calibrated	
3006	Coolant Temperature Sensor - Signal Not Plausible	EDC
3007	Coolant Temperature Sensor - Signal Above Range	EDC
3008	Coolant Temperature Sensor - Signal Below Range Minimum	EDC
3015	Fuel Temperature Sensor - Signal Above Maximum	EDC
3019	Boost Pressure Sensor - Signal Above Range Maximum	EDC
3022	Boost Pressure Sensor - Signal Not Plausible	EDC
3023	Atmospheric Pressure Sensor - Signal Not Plausible	EDC
3024	Atmospheric Pressure Sensor - Signal Above Range Maximum	EDC
3025	Atmospheric Pressure Sensor - Signal Below Range Minimum	EDC
3029	Oil Pressure Sensor - Short Circuit To Battery	EDC
3030	Oil Pressure Sensor - Short Circuit To Ground	EDC
3032	Oil Pressure Sensor - Value Too High	EDC
3033	Oil Temperature Sensor - Signal Not Plausible (Compared With Coolant Temperature)	EDC
3034	Oil Temperature Sensor - Signal Above Range Maximum	EDC
3035	Oil Temperature Sensor - Signal Below Range Minimum	EDC
3037	Boost Pressure Sensor - Signal Low	EDC
3051	Battery Voltage To Engine Controller - Voltage Too High	EDC
3052	Battery Voltage To Engine Controller - Voltage Too Low	EDC
3060	Cylinder 1 - Unclassifiable Error In Injector	EDC

https://tractormanualz.com/

Reference	Description	Controller
3061	Cylinder 1 - Injector Cable Short Circuit (Low Side To Battery)	EDC
3063	Cylinder 1 - Injector Cable Short Circuit (High Side To Ground)	EDC
3064	Cylinder 5 - Unclassifiable Error in Injector	EDC
3065	Cylinder 5 - Injector Cable Short Circuit (Low Side To Battery)	EDC
3067	Cylinder 5 - Injector Cable Short Circuit (High Side To Ground)	EDC
3068	Cylinder 3 - Unclassifiable Error In Injector	EDC
3069	Cylinder 3 - Injector Cable Short Circuit (Low Side To Battery)	EDC
3071	Cylinder 3 - Injector Cable Short Circuit (High Side To Ground)	EDC
3072	Cylinder 6 - Unclassifiable Error In Injector	EDC
3073	Cylinder 6 - Injector Cable Short Circuit (Low Side To Battery)	EDC
3075	Cylinder 6 - Injector Cable Short Circuit (High Side To Ground)	EDC
3076	Cylinder 2 - Unclassifiable Error In Injector	EDC
3077	Cylinder 2 - Injector Cable Short Circuit (Low Side To Battery)	EDC
3079	Cylinder 2 - Injector Cable Short Circuit (High Side To Ground)	EDC
3080	Cylinder 4 - Unclassifiable Error In Injector	EDC
3081	Cylinder 4 - Injector Cable Short Circuit (Low Side To Battery)	EDC
3083	Cylinder 4 - Injector Cable Short Circuit (High Side To Ground)	EDC
3089	Crankshaft Sensor - Invalid Signal	EDC
3093	Offset Between Camshaft And Crankshaft - Outside Boundaries	EDC
3095	Operating With Camshaft Sensor Only - Backup Mode	EDC
3102	Rail Pressure Sensor CP3 - Signal Below Range Minimum	EDC
3104	Rail Pressure Relief Valve - Open	EDC
3105	Rail Pressure Relief Valve - Pressure Shock Requested	EDC
3106	Rail Pressure Relief Valve - Did Not Open After Pressure Shock	EDC
3110	Rail Pressure Sensor Monitoring - Signal Above Range Maximum	EDC
3112	Rail Pressure Sensor CP3 - Signal Above Maximum Range	EDC
3131	Grid Heater Always Switched On	EDC
3137	Metering Unit - Open Load	EDC
3147	Oil Temperature Too High	EDC
3154	Grid Heater Relay - Short Circuit To Battery	EDC
3155	Grid Heater Relay - Short Circuit To Ground	EDC

https://tractormanualz.com/

Reference	Description	Controller
3156	Grid Heater Relay - No Load	EDC
3161	Fan Actuator - Short Circuit to Ground	EDC
3179	Time-out Of CAN Message BC2EDC2	EDC
3180	Time-out of CAN Message VM2EDC	EDC
3188	Cylinder 1 Warning - Open Load	EDC
3192	Cylinder 2 warning - Open Load	EDC
3196	Cylinder 3 Warning - Open Load	EDC
3200	Cylinder 4 Warning - Open Load	EDC
3204	Cylinder 5 Warning - Open Load	EDC
3208	Cylinder 6 Warning - Open Load	EDC
3210	Bank 1 - General Short Circuit To Injector Cable	EDC
3211	Bank 1 - Injector cable Short Circuit Low Side To Ground	EDC
3213	Bank 1 - Unclassifiable Error	EDC
3218	Bank 2 - General Short Circuit On Injector Cable	EDC
3219	Bank 2 - Injector Cable Short Circuit Low Side To Ground	EDC
3221	Bank 2 - Unclassifiable Error	EDC
3227	Injection Processor Error - Internal Reset/Clock Loss/Voltage Too Low	EDC
3228	Injection Processor Error - Unlocked/Initialization Error	EDC
3229	Injection Processor Error - Injections Limited By Software	EDC
3230	Injection Processor Error - SPI Communication Failure	EDC
3231	Injection Processor Error - Internal Reset/Clock Loss/Voltage Too Low	EDC
3232	Injection Processor Error - Unlocked/Initialization Failure	EDC
3233	Injection Processor Error - Test Mode	EDC
3234	Injection Processor Error - SPI Communication Failure	EDC
3242	Engine Controller (Locked) Recovery Occurred	EDC
3243	Engine Controller Recovery (Suppressed) - Recovery Occurred	EDC
3244	Engine Controller Recovery (Visible) - Recovery Occurred	EDC
3245	Engine Controller - Watchdog Not Plausible	EDC
3246	Shutoff Paths During Initialization - Watchdog	EDC
3247	Shutoff Paths Failed During Initialization - Supply Voltage Too High	EDC
3248	Shutoff Paths During Initialization - Supply Voltage Too Low	EDC
3253	ADC Monitoring - Reference Voltage Too Low	EDC
3254	ADC Monitoring - Reference Voltage Too High	EDC
3255	ADC Monitoring Test Impulse Error	EDC
3256	ADC Monitoring Queue Error	EDC

https://tractormanualz.com/