TABLE OF CONTENTS

[ENGINE]

EA1-G121004	CRANK SHAFT GROUP	1
EA1-G122002	PISTON_CONNECTING ROD GROUP	2
EA1-G131002	INTAKE MANIFOLD GROUP	3
EA4-G112001	MAIN BEARING CASE GROUP	4
EA4-G123001	CAMSHAFT GROUP	5
EA4-G124001	IDLE GEAR GROUP	6
EA4-G125001		7
EA4-G142002	OIL PAN GROUP	8
EA4-G143003	OIL GAUGE GROUP	9
TC2-G112010	COOLING FAN GROUP	10
TC2-G118009	ENGINE LABEL GROUP	11
3A165LX-E010	CYLINDER BLOCK GROUP	12
EA1-G103002	CYLINDER HEAD GROUP	14
3B183-E040	GEAR CASE GROUP	15
EA1-G116002	CYLINDER HEAD COVER GROUP	18
3A165LW-E100	CAMSHAFT GROUP	19
EA1-G124003	FLYWHEEL GROUP	20
3A150LW-E140	FUEL CAMSHAFT GROUP	21
3B183-E150	SPEED CONTROL LEVER GROUP	23
EA1-G111502	FUEL EQUIPMENT GROUP	25
EA1-G151002	FUEL EQUIPMENT GROUP	26
4B243LW-E160	ENGINE STOP LEVER GROUP	27
EA1-G113502	GOVERNOR GROUP	29
3A165SV-E180	WATER PUMP GROUP	30
EA1-G114002	WATER FLANGE GROUP	31
EA1-G125002	COOLING FAN GROUP	32
EA1-G121002	EXHAUST MANIFOLD GROUP	33
EA1-G132004	EPA LABEL GROUP	34

[TRANSMISSION]

TC2-G211001	CLUTCH GROUP	35
TC2-G212003	CLUTCH RELEASE GROUP	36
TC2-G222001	CLUTCH HOUSING GROUP	37
TC2-G224005	TRANSMISSION CASE GROUP	38
TC2-G232003	DRIVE SHAFT GROUP	39

https://tractormanualz.com/

TC2-G241001	MAIN SHIFT SHAFT GROUP	40
TC2-G242001	MAIN SHIFT FORK GROUP	42
TC2-G272001	RANGE SHIFT FORK GROUP	44
TC2-G282001	REAR DIFFERENTIAL GROUP	45
TC2-G283003	REAR DIFF LOCK GROUP	47
TC2-G293001	BRAKE GROUP	48
TC2-G2A1001	REAR AXLE GROUP	49
TC2-G2B2001	FRONT WHEEL DRIVE FORK GROUP	51
TC2-G2C4006	PTO SHAFT GROUP	52
TC2-G2C5001	PTO SHIFT FORK GROUP	54
TC2-G2G1003	REAR WHEEL GROUP	55
TC2-G2C1001	PTO INPUT SHAFT GROUP	56

[FRONT AXLE]

TC2-G2B1006	FRONT WHEEL DRIVE SHAFT GROUP	57
TC2-G271003	RANGE SHAFT GROUP	58
TC2-G281003	SPIRAL BEVEL PINION SHAFT GROUP	59
TC2-G311003	FRONT AXLE SUPPORT GROUP	60
TC2-G312001	FRONT DIFF SYSTEM GROUP	61
TC2-G313001	BEVEL PINION SHAFT GROUP	62
TC2-G314003	BEVEL GEAR CASE GROUP	64
TC2-G316003	FRONT AXLE CASE GROUP	65
TC2-G321001	STEERING CYLINDER GROUP	67
TC2-G332001	FRONT AXLE BRACKET GROUP	68
TC2-G317005	FRONT AXLE GROUP	70
TC2-G331001	PROPELLER SHAFT GROUP	71
TC2-G341007	FRONT WHEEL GROUP	72

[HYDRAULIC]

TC2-G431021	POWER STEERING UNIT GROUP	73
TC2-G446024		74
TC2-G431002	POWER STEERING UNIT GROUP	75
TC2-G463501	LIFT CYLINDER GROUP	76
TC2-G411005	SUCTION LINE GROUP	77
TC2-G412003	GEAR PUMP GROUP(T3)	78
TC2-G441006	JOYSTICK VALVE GROUP(T3)	80
TC2-G461001	LIFT CONTROL VALVE(MEC) GROUP	82

https://tractormanualz.com/

TC2-G463005	HYDRAULIC CYLINDER GROUP	83
TC2-G463502	LIFT CYLINDER GROUP	85
TC2-G464001	DOWN SPEED CONTROL GROUP	87
TC2-G464501	TOP LINK DEVICE GROUP	88
TC2-G465501	HYDRAULIC SYSTEM GROUP(1)	89
TC2-G466001	HYDRAULIC SYSTEM GROUP(2)	90
TC2-G466501	AIR BREATHER GROUP	91

[ELECTRICAL]

TC2-G515024	START CONTROL GROUP	92
TC2-G512001	ENGINE ELECTRICAL GROUP(3)	93
TC2-G512501	ENGINE ELECTRICAL GROUP(4)	94
TC2-G513001	STARTER MOTOR GROUP	95
TC2-G513002	STARTER MOTOR GROUP	96
TC2-G513501	BATTERY GROUP	97
TC2-G514002	ALTERNATOR GROUP	98
TC2-G514504	GLOW CONTROL GROUP	99
TC2-G515013	START CONTROL GROUP	100
TC2-G522001	TURN SIGNAL LAMP GROUP	101
TC2-G522002	TURN SIGNAL LAMP GROUP	102
TC2-G522501	REAR COMBINATION LAMP GROUP	103
TC2-G522502	REAR COMBINATION LAMP GROUP	104
TC2-G524004	REFLECTOR GROUP	105
TC2-G525003	LIGHT CONTROL GROUP	106
TC2-G532502	HEAD LAMP WIRE HARNESS GROUP	107
TC2-G533024	DISPLAY CONTROL GROUP	108
TC2-G533501	FUEL SENDER GROUP	109
TC2-G534003	PTO CONTROL GROUP	110
TC2-G534501	HORN GROUP	111
TC2-G514503	GLOW CONTROL GROUP	112
TC2-G521001	HEAD LIGHT GROUP	113
TC2-G521002	HEAD LIGHT GROUP	114
TC2-G531016	WIRE HARNESS GROUP	115
TC2-G532501	HEAD LAMP WIRE HARNESS GROUP	116
TC2-G533003	DISPLAY CONTROL GROUP	117
TC2-G533018	DISPLAY CONTROL GROUP	118

https://tractormanualz.com/

[CHASSIS]

TC2-G6D1019	LABEL(BONNET COVER) GROUP	119
TC2-G6D2002	LABEL(MFG CERTIFICATE) GROUP	120
TC2-G6D3007	LABEL(MAIN/ETC) GROUP	121
TC2-G611017	AIR CLEANER GROUP	123
TC2-G612515	RADIATOR GROUP	124
TC2-G621006	FRONT AXLE FRAME GROUP(OS)	127
TC2-G631002	ROPS BAR GROUP	128
TC2-G631007	ROPS BAR GROUP	129
TC2-G661005	SEAT GROUP	130
TC2-G661022	SEAT GROUP	131
TC2-G695004	PTO SHAFT COVER GROUP	133
TC2-G617001	BATTERY FIXING GROUP	134
TC2-G621002	FRONT AXLE FRAME GROUP	135
TC2-G631011	ROPS BAR GROUP	136
TC2-G633001	STEP SEAT FRAME GROUP	137
TC2-G637001	LEVER GUIDE(CAB) GROUP	141
TC2-G640101	MAIN SHIFT LEVER GROUP	142
TC2-G640502	RANGE SHIFT LEVER GROUP	143
TC2-G641001	POSITION DRAFT CONTROL LEVER GROUP	144
TC2-G642001	JOYSTICK LEVER GROUP	145
TC2-G643001	PTO LEVER GROUP	148
TC2-G644501	FRONT WHEEL DRIVE LEVER GROUP	149
TC2-G645001	PARKING BRAKE LEVER GROUP	150
TC2-G645501	DIFFERENTIAL PEDAL GROUP	151
TC2-G646001	CLUTCH PEDAL GROUP	152
TC2-G646502	BRAKE PEDAL GROUP	153
TC2-G653004	STEERING COLUMN GROUP	155
TC2-G655003	INSTRUMENT COVER GROUP	157
TC2-G681004	LOWER LINK GROUP	158
TC2-G682005	CHECK LINK GROUP	159
TC2-G683002	TOP LINK GROUP	160
TC2-G684003	LIFT ROD GROUP	161
TC2-G692010	DRAWBAR GROUP	162
TC2-G6F6501	REFLECTOR GROUP	163
TC2-G6D5024	LABEL GROUP(LK2610)	164
TC2-G612005	MUFFLER GROUP	166

https://tractormanualz.com/

TC2-G615506	BONNET GROUP	167
TC2-G635003	FENDER(ROPS) GROUP	170
TC2-G646602	BRAKE LOCK GROUP	172
TC2-G651002	STEERING WHEEL GROUP	173
TC2-G662010	STEP MAT GROUP	174
TC2-G611006	AIR CLEANER GROUP	175
TC2-G612503	RADIATOR GROUP	176
TC2-G648102	ACCELERATOR LEVER GROUP	179
TC2-G671003	FUEL TANK GROUP	181
TC2-G6D4002	LABEL(FRAME) GROUP	183

[CABIN]

TB110C-T2110A	MOUNTING GROUP	184
TB110C-T2120A	FRONT GLASS GROUP	185
CK20C-T2130A	DOOR GROUP	188
TB110C-T2140A	REAR GLASS GROUP	191
CK30C-T2170A	WIPER MOTOR GROUP	193
TB1-G6C2502	ROOF GROUP	194
TC2-G6C2503	ROOF GROUP	196
TB1-G216002	ELECTRICAL PARTS GROUP	198
TC2-G223002	WIPER(REAR) GROUP(OPTION)	200

[OPTION]

TC2-G2M1002	TIRE GROUP(OPTION)	202
TC2-G446021	DOUBLE ACTING VALVE GROUP	203
TC2-G6F4503	REAR VIEW MIRROR GROUP	206
TC2-G6G1001	SUNSHADE GROUP	207
TC2-G6G3301	FRONT ROPS GROUP(OPT.-US)	208
TC2-G6G4101	ARM REST GROUP(OPTION)	211
TC2-G632002	FRONT ROPS GROUP(OPTION)	212
TC2-G2M1001	TIRE GROUP(OPTION)	214
TC2-G446006	DOUBLE ACTING VALVE GROUP (SPRING)	216
TC2-G446007	DOUBLE ACTING VALVE GROUP (DETENT)	220
TC2-G446008	DOUBLE ACTING VALVE GROUP	224
TC2-G6A2002	FRONT WEIGHT GROUP	228
TC2-G6F2001	TOOL BOX GROUP	230
TC2-G637506	SUNSHADE GROUP	231

https://tractormanualz.com/

TC2-G643403	MID PTO LEVER GROUP	232
TC2-G6A3001	REAR WEIGHT GROUP	235
TB110C-T2100A	CABIN GROUP	236
CK20HC-T2150A	ROOF GROUP	240
CK30C-T2180A	LAMP GROUP(OPTION)	242
CK30C-T2190A	WORKING LAMP GROUP(OPTION)	243
CK30C-T2200A	CD PLAYER GROUP(OPTION)	244
TB1100C-T2210A	Interior material group(option)	246
CK30C-T2230A	REAR WIPER GROUP(OPTION)	248
TC2-G6G2401	LOWER LINK GROUP(OPTION)	250
TC2-G6F9007	ACCESSORIES_SERVICE PARTS GROUP	252
TC2-G591002	OPTIONAL LAMP GROUP	253
TC2-G611002	AIR CLEANER GROUP (OPTION)	254
TC2-G662002	STEP MAT GROUP (OPTION)	255
TC2-G664002	ARM REST GROUP (OPTION)	256
TC2-G684002	LIFT ROD GROUP (OPTION)	257
INDEX1		258
INDEX2		270

https://tractormanualz.com/

EA1-G121004

CRANK SHAFT GROUP

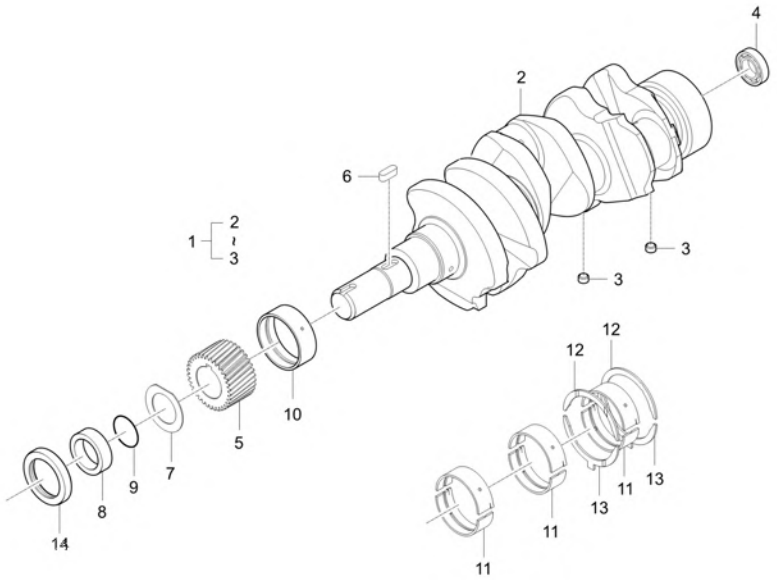

A : CK2610

No.	Part Number	Description	Qty A	Qty B	Qty C	Qty D	Qty E	I.C	Remark
1	E5616-23015	ASSY,CRANK SHAFT	1						
2	E5800-23116	SHAFT,CRANK	1						-
3	06350-00708	OB PLUG,AVSEAL	3						
4	08121-06002	BEARING,BALL	1						#6002ZZ
5	E6200-24112	GEAR, CRANKSHAFT	1						
6	05712-00720	KEY	1						W7XL20
7	15471-2331-1	OIL SLINGER	1						T1*53*53
8	E6510-23251	COLLAR, CRANKSHAFT dnr v	1						
8	E6510-23252	SPACER v	1					<----->	
9	04811-10300	O RING	1						DIA29.5
10	E6200-23472	METAL1, CRANKSHAFT	1						
11	E6200-23482	METAL2, CRANKSHAFT	6						
12	E6300-23531	METAL SIDE 1 v	2						
13	E6300-23541	SIDE METAL2 v	2						
14	E5500-11302	OIL SEAL	1						-

----> Old replace New
<----> Interchangeable
* Please place an order assy(*)
<---- New replace Old
<-O-> Interchangeable with another part(s)
<-X-> Not interchangeable

https://tractormanualz.com/

EA1-G122002

PISTON_CONNECTING ROD GROUP

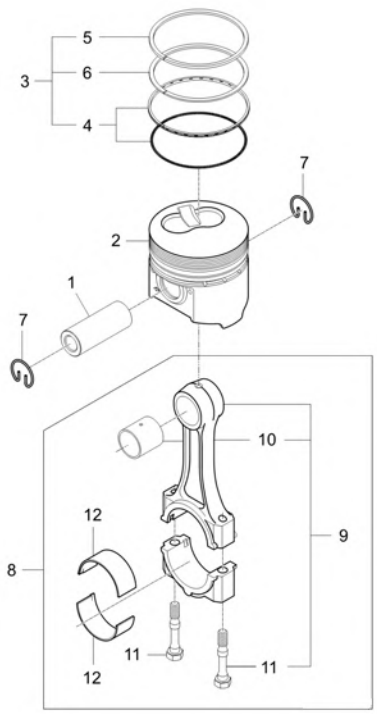

A : CK2610

No.	Part Number	Description	Qty A	Qty B	Qty C	Qty D	Qty E	I.C	Remark
1	E6720-21312	PIN, PISTON v	3						
2	EA13-0001A	PISTON	3						
3	E6302-21051	PISTON RING Assy	3						-
4	E6301-21202	ASSY,OIL RING	1						
5	E6302-21151	RING 1, PISTON v	1						
6	E6302-21161	RING 2, PISTON	1						
7	E6300-21332	SNAP RING, PISTON PIN	6						
8	E6300-22019	ROD, CONNECTING	3						
9	E6300-22028	ASSY, CONNECTING ROD v	3						
9	E6300-22029	ASSY, CONNECTING ROD v	3					<----->	
10	E6300-21354	PISTON BUSH	1						
11	E5800-22142	BOLT, CONNECTING ROD	2						
12	E6300-22312	PIN, METAL CRANK v	2						

----> Old replace New
<---- New replace Old
<-X-> Not interchangeable
<---> Interchangeable
<-O-> Interchangeable with another part(s)
* Please place an order assy(*)

https://tractormanualz.com/

EA1-G131002

INTAKE MANIFOLD GROUP

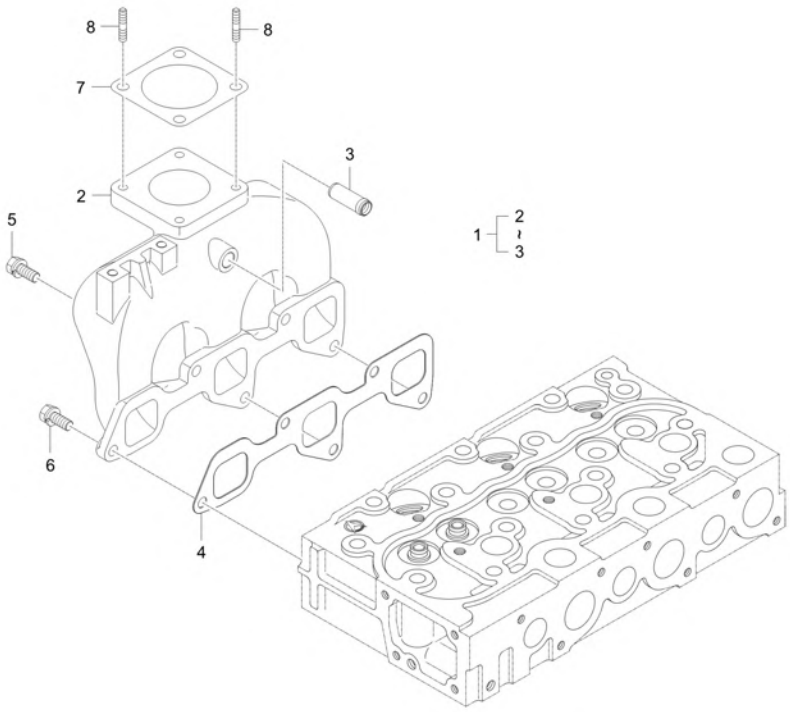

A : CK2610

No.	Part Number	Description	Qty A	Qty B	Qty C	Qty D	Qty E	I.C	Remark
1	EA11-0015A	ASSY MANIFOLD, INLET	1						
2	EA11-0014A	INTAKE MANIFOLD	1						
3	E6510-05552	CONNECTOR, AIR BREATHER HOSE	1						-
4	E5800-11822	GASKET/INLET MANIFOLD	1						T1.0
5	01123-50822	WASHER BOLT	3						M8XP1.25
6	01123-50825	BOLT WITH WASHER	2						M8XP1.25
7	EA11-0016A	GASKET	1						t0.33
8	01513-50835	STUD	2						M8XP1.25

----> Old replace New
<---- New replace Old
<-X-> Not interchangeable
<---> Interchangeable
<-O-> Interchangeable with another part(s)
* Please place an order assy(*)

https://tractormanualz.com/

EA4-G112001

MAIN BEARING CASE GROUP

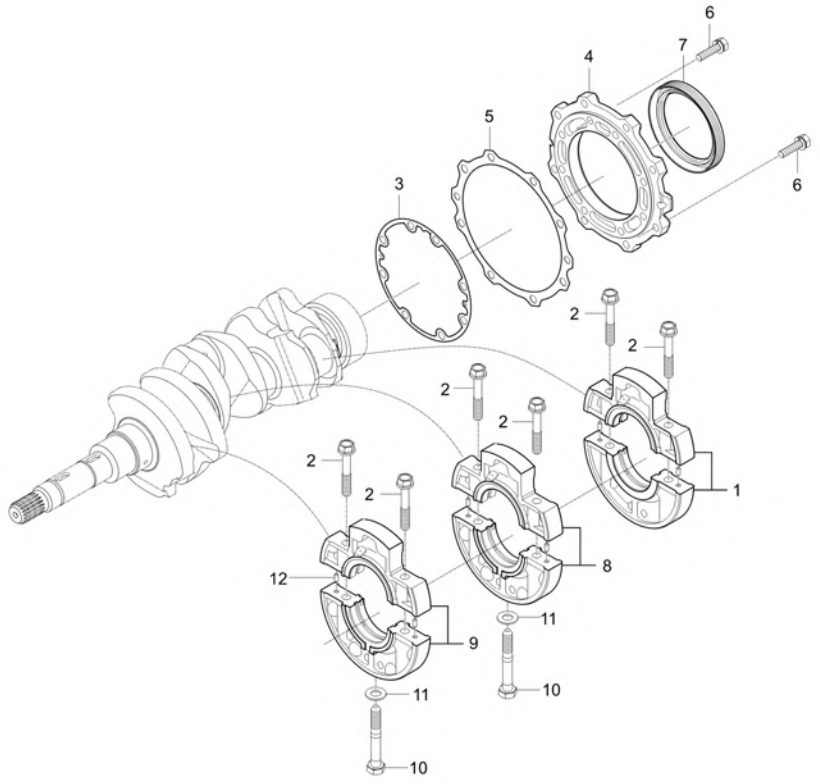

A : CK2610

No.	Part Number	Description	Qty A	Qty B	Qty C	Qty D	Qty E	I.C	Remark
1	E6300-04044	MAIN BEARINGCASE ASSEMBLY	1						
2	E6300-04542	BOLT, BEARING CASE 1	6						
3	E6300-04362	GASKET, BEARING CASE v	1						
3	E6300-04363	GASKET, BEARING CASE v	1					<----->	
4	E6300-04813	COVER, MAIN BEARING CASE dnr v	1						
4	E6300-04814	COVER, MAIN BEARING CASE v	1					<----->	
5	E6300-04822	GASKET, BEARING COVER CASE	1						
6	01654-50830	FLANGE BOLT	16						M8x1.25
7	E5500-04464	OIL SEAL v	1						-
8	E6300-04054	MAIN BEARING CASE ASSEMBLY 1	1						
9	E6300-04064	MAIN BEARING CASE ASSEMBLY 2	1						
10	15291-0456-2	BEARING CASE BOLT 2	2						HEX17,M10* 1.25*88
11	04014-50100	PLAIN WASHER	2						M10
12	05012-00408	STRAIGHT PIN	6						DIA4XL8

----> Old replace New
<---- New replace Old
<-X-> Not interchangeable
<---> Interchangeable
<-O-> Interchangeable with another part(s)
* Please place an order assy(*)

https://tractormanualz.com/

EA4-G123001

CAMSHAFT GROUP

A : CK2610

No.	Part Number	Description	Qty A	Qty B	Qty C	Qty D	Qty E	I.C	Remark
1	E5500-15553	TAPPET	6						-
2	F6800-15111	ROD PUSH v	6						-
3	E5603-16011	ASSY,CAM SHAFT	1						
4	E5603-16151	CAMSHAFT	1						
5	06350-00607	PLUG v	2						
6	15521-1651-1	USE 15521-16511	1						820G
7	05712-00720	KEY	1						W7XL20
8	E5500-16272	CAMSHAFT,STOPPER	1						
9	01123-50818	BOLT, WASHER	2						M8XP1.25

----> Old replace New
<---- New replace Old
<-X-> Not interchangeable
<---> Interchangeable
<-O-> Interchangeable with another part(s)
* Please place an order assy(*)

https://tractormanualz.com/

EA4-G124001

IDLE GEAR GROUP

A : CK2610

No.	Part Number	Description	Qty A	Qty B	Qty C	Qty D	Qty E	I.C	Remark
1	E6300-24012	ASSY, IDLE GEAR	1						
2	E6300-24371	COLLAR 2	1						
3	E6300-24321	SNAP RING	1						
4	E6300-24253	SHAFT GEAR,IDLE	1						
5	01754-50820	BOLT, FLANGE	3						M8XP1.25

----> Old replace New
<----> Interchangeable
* Please place an order assy(*)
<---- New replace Old
<-O-> Interchangeable with another part(s)
<-X-> Not interchangeable

https://tractormanualz.com/

EA4-G125001

A : CK2610

No.	Part Number	Description	Qty A	Qty B	Qty C	Qty D	Qty E	I.C	Remark
1	E6301-13111	INLET VALVE	3						
2	E6301-13121	EXHAUST VALVE	3						
3	15221-1324-2	VALVE SPRING	6						DIA3.5
4	E5500-13332	RETAINER,VALVE SPRING v dnr	6						
4	E5500-13333	RETAINER VALVE SPRING v	6					<----->	
5	E6403-13361	COLLET,VALVE SPRING v	12						KK8(독일 TRW)
6	E6301-13151	SEAL, VALVE STEM	6						
7	E5800-14001	ASSY,SHAFT ROCKER ARM	1						
8	E5800-14051	ASS'Y SHAFT,ROCKER ARM	1						
9	E6301-14351	ROCKERARM BRACKET	3						
10	E6301-14431	PLAIN WASHER	2						T1.2*30*30
11	E6301-14311	ROCKERARM SPRING	2						
12	04612-00190	SNAP RING	2						DIA19
13	E6301-14111	ROCKERARM	6						
14	15021-1424-1	NUT	6						HEX12,M8*1.0*11
15	E5500-14232	SCREW,ADJUSTING	6						DIA10,M8*1.0*34
16	E6510-91502	BOLT,(R/A SUPPORT) v	3						

----> Old replace New
<---- New replace Old
<-X-> Not interchangeable
<---> Interchangeable
<-O-> Interchangeable with another part(s)
* Please place an order assy(*)

https://tractormanualz.com/

EA4-G142002

OIL PAN GROUP

A : CK2610

No.	Part Number	Description	Qty A	Qty B	Qty C	Qty D	Qty E	I.C	Remark
1	E5800-01604	ASSY FAN OIL	1					<------	
1	E5800-01605	ASSY FAN,OIL dnr v	1					<------	
2	E5800-01611	PAN, OIL dnr v	1						
3	E1100-33752	PLUG, OIL DRAIN v	2					<------	NA37,48,78, 95
3	E6303-33751	PLUG	2					<------	-
3	E6303-33752	PLUG	2					<------	-
4	04717-01200	WASHER, SEAL	1						
4	E6303-33661	GASKET	2					<------	2.0t
5	E5500-01623	GASKET,OIL PAN	1						
6	01674-51032	FLANGE BOLT	20						
7	E6200-32112	FILTER1 OIL v	1						
7	E6200-32113	OIL FILTER 1 v	1					<----->	
8	01654-50820	BOLT, FLANGE WITH PIN	1						
9	04811-00160	O RING	1						DIA15.8

----> Old replace New
<---- New replace Old
<-X-> Not interchangeable
<---> Interchangeable
<-O-> Interchangeable with another part(s)
* Please place an order assy(*)

https://tractormanualz.com/

EA4-G143003

OIL GAUGE GROUP

A : CK2610

No.	Part Number	Description	Qty A	Qty B	Qty C	Qty D	Qty E	I.C	Remark
1	E5752-35692	GUIDE, OIL GAUGE	1						
2	E5629-36413	GAUGE, OIL v	1						
3	E6305-36422	OIL GAUGE GUIDE PIPE	1						
4	E7310-36431	PACKING	1						

----> Old replace New
<---> Interchangeable
* Please place an order assy(*)
<---- New replace Old
<-O-> Interchangeable with another part(s)
<-X-> Not interchangeable

https://tractormanualz.com/

TC2-G112010

COOLING FAN GROUP

A : CK2610

No.	Part Number	Description	Qty A	Qty B	Qty C	Qty D	Qty E	I.C	Remark
1	E5629-74111	COOLING FAN v	1						
2	E5850-74151	COLLAR,FAN	1						
3	E6790-74251	PULLEY, FAN	1						
4	01023-50680	BOLT v	4						
5	04012-50060	PLAIN WASHER	4						M6
6	EH16-0008A	BELT, FAN-GREEN-1 LA42.5	1						REC GREEN -1 LA42.5

----> Old replace New
<---- New replace Old
<-X-> Not interchangeable
<---> Interchangeable
<-O-> Interchangeable with another part(s)
* Please place an order assy(*)

https://tractormanualz.com/

TC2-G118009

ENGINE LABEL GROUP

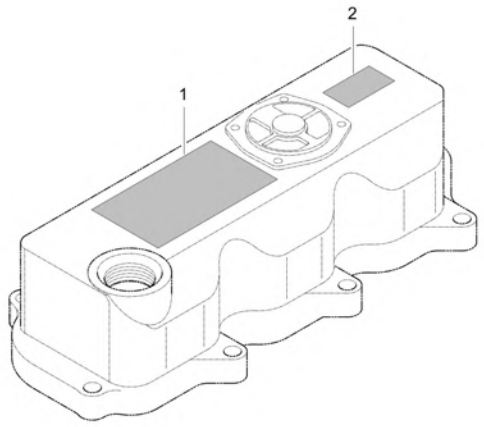

A : CK2610

No.	Part Number	Description	Qty A	Qty B	Qty C	Qty D	Qty E	I.C	Remark
1	EA18-0005A	LABEL, EPA CERTIFICATE-(KIOTI)	1						
1	EA18-0005B	LABEL, EPA CERTIFICATE-(KIOTI)	1					<------	
2	F6805-99521	LABEL KIOTI	1						T=0.05-0.08
2	E5608-99522	LABEL KIOTI	1					<------	

----> Old replace New
<---- New replace Old
<-X-> Not interchangeable
<---> Interchangeable
<-O-> Interchangeable with another part(s)
* Please place an order assy(*)

https://tractormanualz.com/

3A165LX-E010

CYLINDER BLOCK GROUP

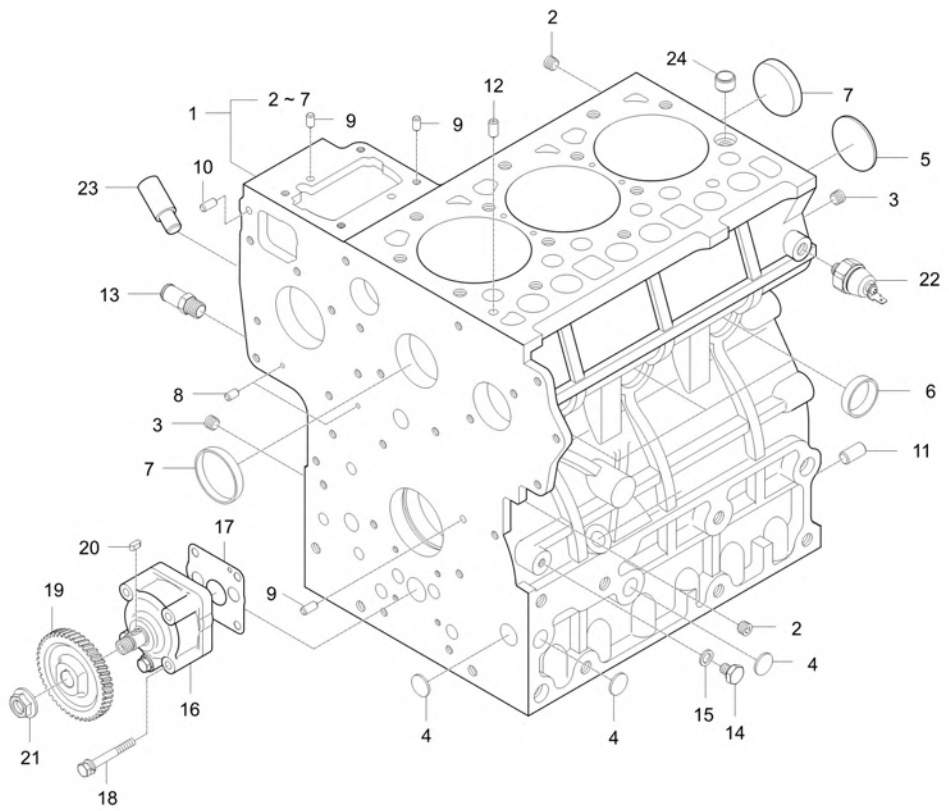

A : CK2610

No.	Part Number	Description	Qty A	Qty B	Qty C	Qty D	Qty E	I.C	Remark
1	E5640-A0013	CYLINDER BLOCK ASSEMBLY	1						
1	E5640-01014	CYLINDER BLOCK ASSEMBLY	1					<----->	
1	E5640-01015	CYLINDER BLOCK ASSEMBLY	1					<--O-->	
2	E5900-96021	OBS USE E5900-96022	5						N
2	E5900-96022	PLUG	5					<----->	-
3	E5900-96032	PLUG	2						
4	06311-75018	PLUG	3						
4	EB54-0017A	CAP, SEALING	3					<--O-->	T=1.0
5	06311-75045	PLUG	1						DIA45
6	15221-0338-3	CAP, SEALING	5						-
7	15221-0339-2	CAP SEALING	2						-
8	05012-00408	STRAIGHT PIN	2						DIA4XL8
9	05012-00609	PIN, PARALLEL	2						
10	05012-00612	STRAIGHT PIN	2						
11	05012-01018	PIN, STRAIGHT	2						DIA10XL18
12	15221-3365-1	PIN, TUBE	1						DIA8*18
13	E5500-73342	HOSE, WATER RETURN v	1						
13	E5500-73343	PIPE, WATER RETURN	1					<------	

----> Old replace New
<---> Interchangeable
* Please place an order assy(*)
<---- New replace Old
<-O-> Interchangeable with another part(s)
<-X-> Not interchangeable

https://tractormanualz.com/

3A165LX-E010

CYLINDER BLOCK GROUP

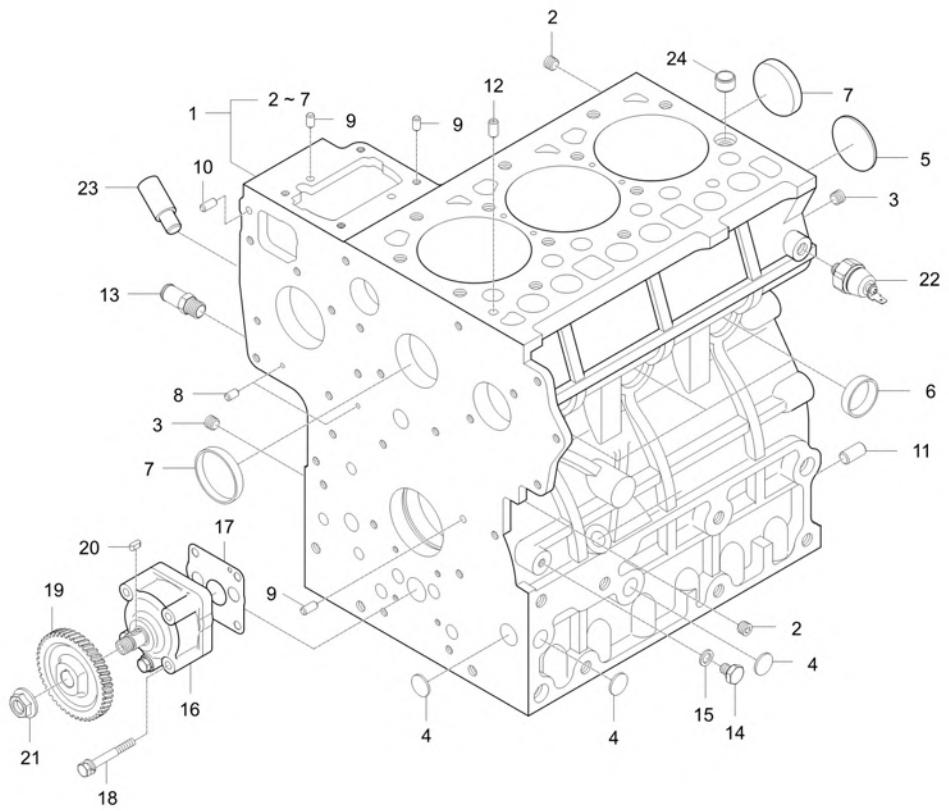

A : CK2610

No.	Part Number	Description	Qty A	Qty B	Qty C	Qty D	Qty E	I.C	Remark
14	15221-3361-1	PLUG	1						HEX14,M8*1.25
14	15221-3361-2	PLUG	1					<------	HEX14,M8*1.25
15	15021-3366-1	WASHER	1						T1.5
16	E6200-35012	ASSY, OIL PUMP v	1						
17	E5500-35154	GASKET,OIL PUMP	1						T0.3*60*60
18	01023-50650	BOLT	4						M6*Pl.0
18	01023-50648	OB-BOLT	4					<----->	
19	19202-3566-1	GEAR OIL PUMP DRIVING	1						220G
20	05712-00410	KEY	1						W4XL10
21	E6300-35681	FLANGE NUT	1						M12*P1.25
22	E5500-39013	OIL SWITCH	1						
23	E5752-35692	GUIDE, OIL GAUGE	1						
24	E6301-33812	PIN, PIPE	1						-

----> Old replace New
<---- New replace Old
<-X-> Not interchangeable
<---> Interchangeable
<-O-> Interchangeable with another part(s)
* Please place an order assy(*)

https://tractormanualz.com/

EA1-G103002

CYLINDER HEAD GROUP

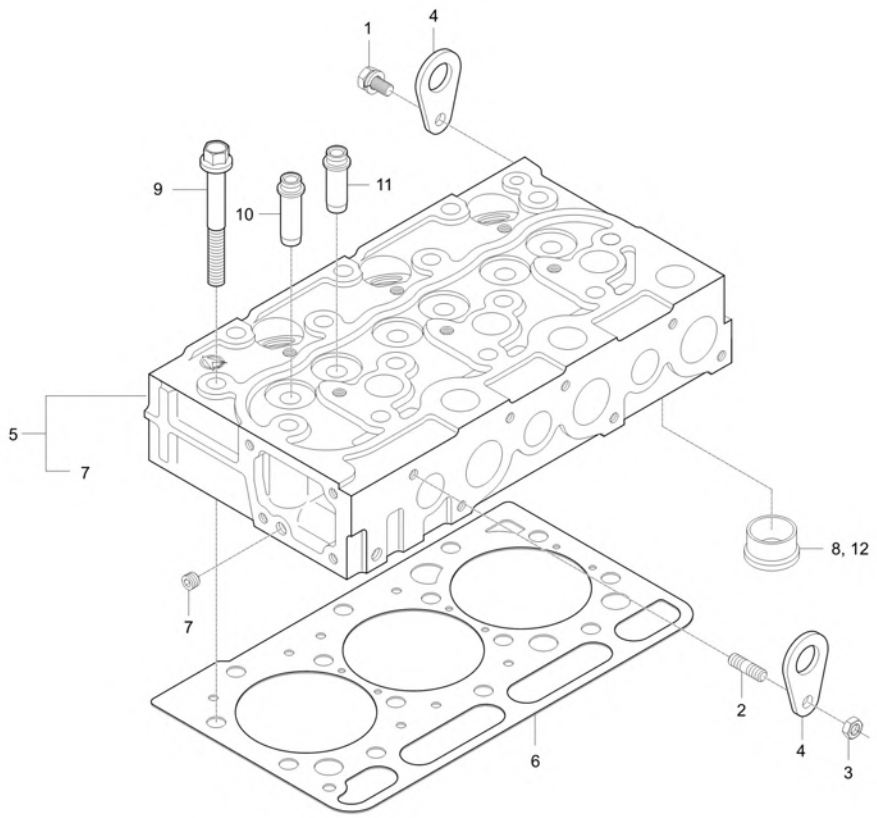

A : CK2610

No.	Part Number	Description	Qty A	Qty B	Qty C	Qty D	Qty E	I.C	Remark
1	01123-50816	Hex Head Cap Screw	1						M8XP1.25
2	01513-50822	STUD	1						M8XP1.25
3	02763-50080	FLANGE NUT	1						M8XP1.25
4	15221-0175-1	ENGINE HOOK	2						T4*40*64
5	E5600-0304C	COMP, HEAD, CYLINDER	1						
6	E5850-03313	GASKET, CYLINDER HEAD v	1						
7	E5900-96022	PLUG	1						-
8	E6400-03141	EOMBUSTION CHAMBER	3						
9	E6850-03451	BOLT, HEAD	14						M11×1.25P

----> Old replace New <---- New replace Old <-X-> Not interchangeable
<---> Interchangeable <-O-> Interchangeable with another part(s)
* Please place an order assy(*)

https://tractormanualz.com/

3B183-E040

GEAR CASE GROUP

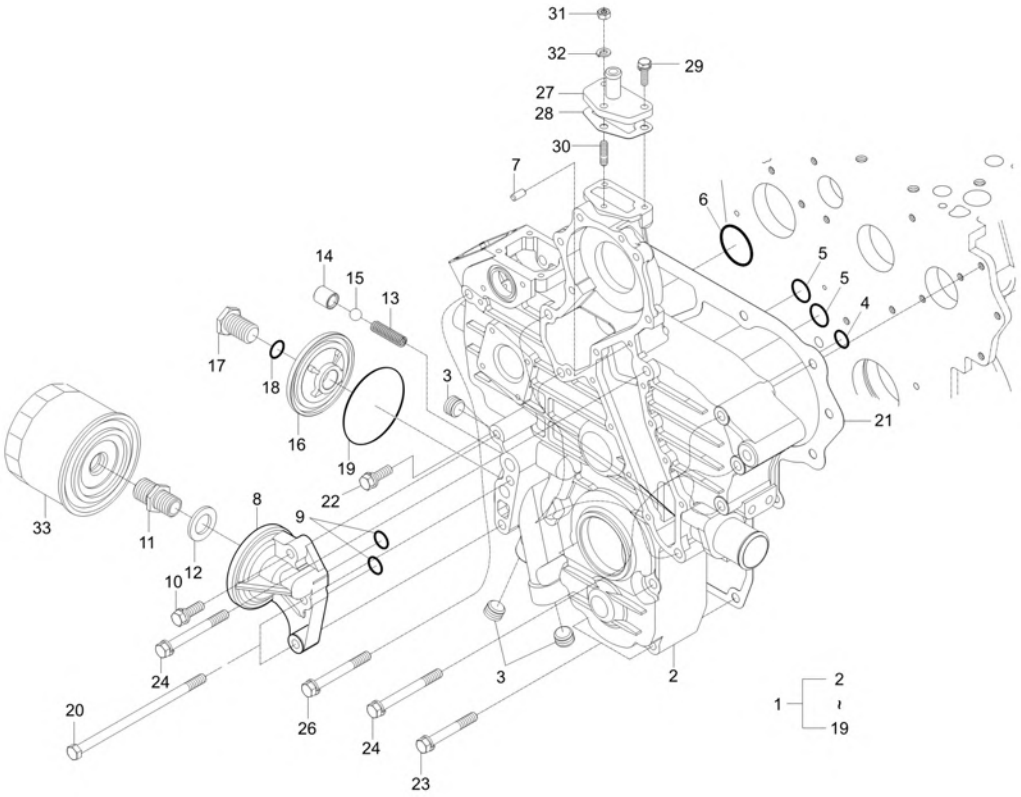

A : CK2610

No.	Part Number	Description	Qty A	Qty B	Qty C	Qty D	Qty E	I.C	Remark
1	E5850-A0029	GEARCASE ASSY	1						
2	E5850-04114	GEAR CASE	1						
2	E5850-04115	CASE, GEAR	1					<------	
3	E5800-96032	PLUG	3						PT3/8
4	04811-00150	O RING v	1						DIA14.8
5	04811-00220	O RING	2						DIA21.8
6	04811-00360	O RING	1						
7	05012-00612	STRAIGHT PIN	2						
8	E5850-32617	SUPPORT,OIL FILTER	1						-
9	04811-00150	O RING v	2						DIA14.8
10	01123-50835	BOLT, WITH WASHER	1						M8XP1.25
11	15521-3229-1	REAR MOUNT ASSEMBLY	1						HEX24,M20*1.5*47
11	E6810-32292	TUBE, CONNECTING	1					<------	-
12	04011-50180	PLAIN WASHER	1						M18
13	15241-3695-2	SPRING	1						DIA1.2
14	E5500-36932	SEAT,VALVE	1						DIA16*21
15	07715-03213	STEEL BALL	1						13/32"(10.3188)
16	E5800-32882	COVER	1						

----> Old replace New <---- New replace Old <-X-> Not interchangeable
<---> Interchangeable <-O-> Interchangeable with another part(s)
* Please place an order assy(*)

https://tractormanualz.com/

3B183-E040

GEAR CASE GROUP

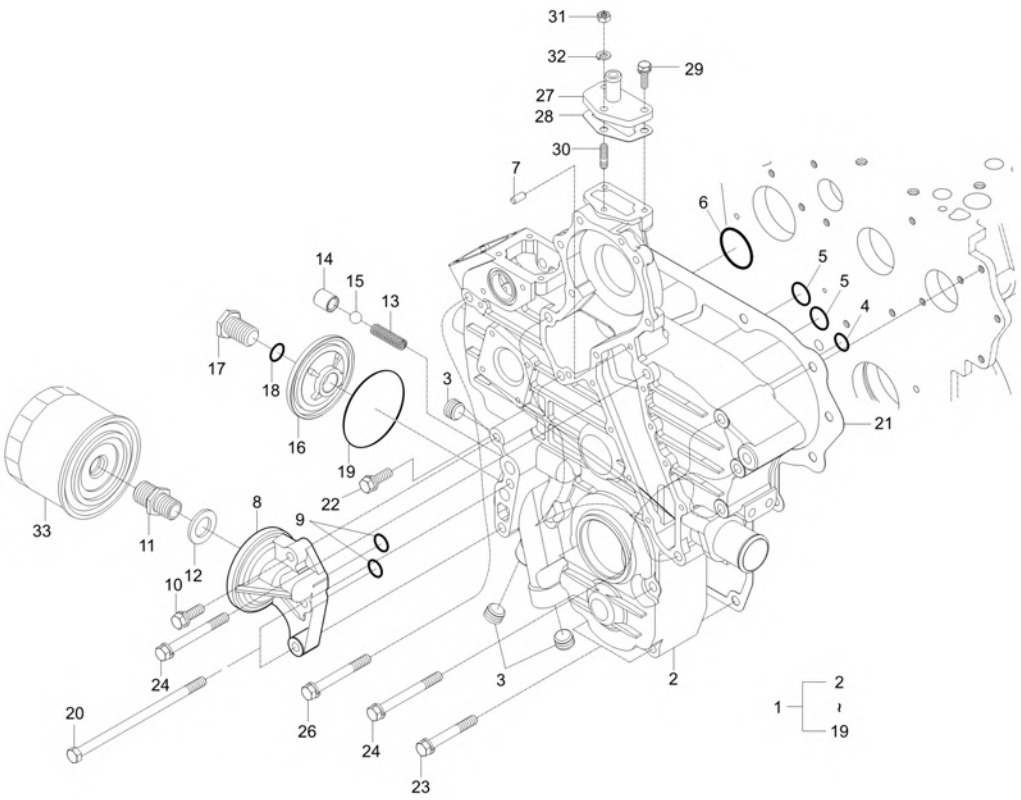

A : CK2610

No.	Part Number	Description	Qty A	Qty B	Qty C	Qty D	Qty E	I.C	Remark
17	E5800-32912	BOLT, COVER	1						
17	E5800-32913	BOLT, COVER V	1					<------	
18	04811-00150	O RING v	1						DIA14.8
19	E5800-96831	O RING	1						
20	E5850-04081	SCREW	2						M8×1.25
20	E5850-04082	BOLT, FLANGE	2					<------	M8 X 1.25
21	E5850-04132	GASKET GEAR CASE v	1						
22	01123-50835	BOLT, WITH WASHER	1						M8XP1.25
23	01123-50860	WASHER BOLT	2						M8XP1.25
24	01123-50870	WASHER BOLT	5						M8XP1.25
25	01123-50875	OB-BOLT	2						M8XP1.25
26	01123-50885	WASHER BOLT	3						
27	15521-7332-1	WAETER RETURN FLANGE	1						
28	E5500-73332	GASKET v	1						t0.5
29	01023-50620	BOLT, WASHER	2						M6XP1.0
30	01513-50616	STUD	1						DIA6*28
31	02056-50060	NUT	1						M6XP1.0
32	04512-50060	WASHER, SPRING	1						M06

----> Old replace New <---- New replace Old <-X-> Not interchangeable
<---> Interchangeable <-O-> Interchangeable with another part(s)
* Please place an order assy(*)

https://tractormanualz.com/

3B183-E040

GEAR CASE GROUP

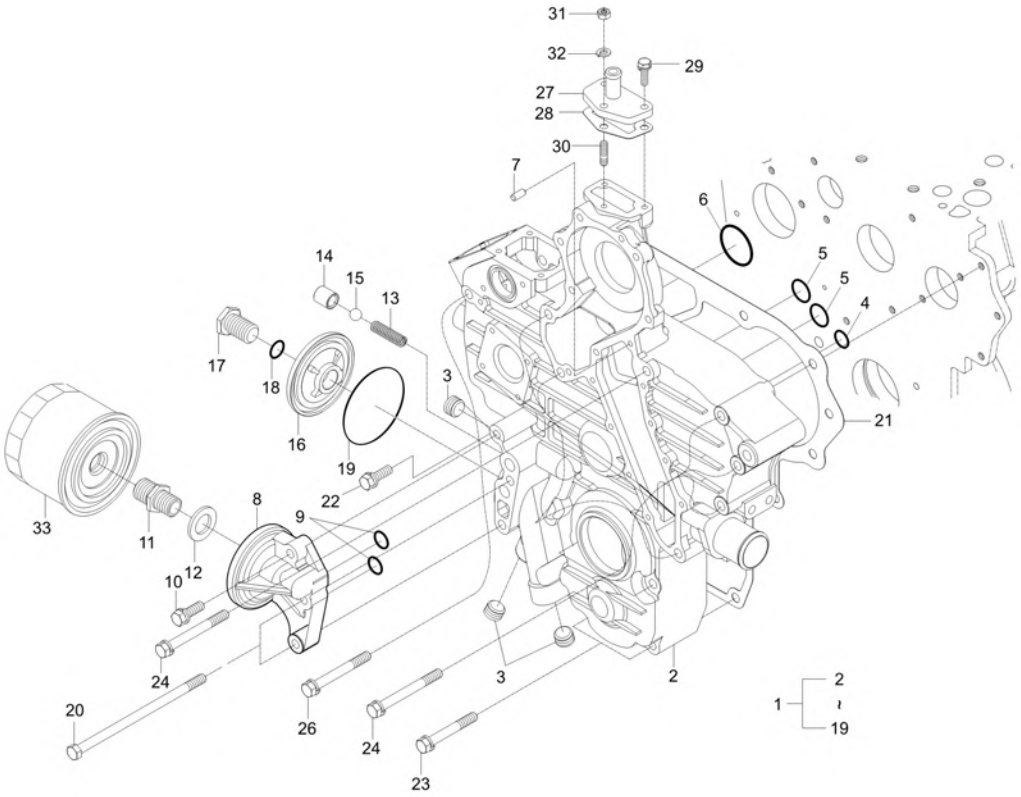

A : CK2610

No.	Part Number	Description	Qty A	Qty B	Qty C	Qty D	Qty E	I.C	Remark
33	E6201-32443	OIL FILTER sp v	1						

----> Old replace New
<---- New replace Old
<-X-> Not interchangeable
<---> Interchangeable
<-O-> Interchangeable with another part(s)
* Please place an order assy(*)

https://tractormanualz.com/

EA1-G116002

CYLINDER HEAD COVER GROUP

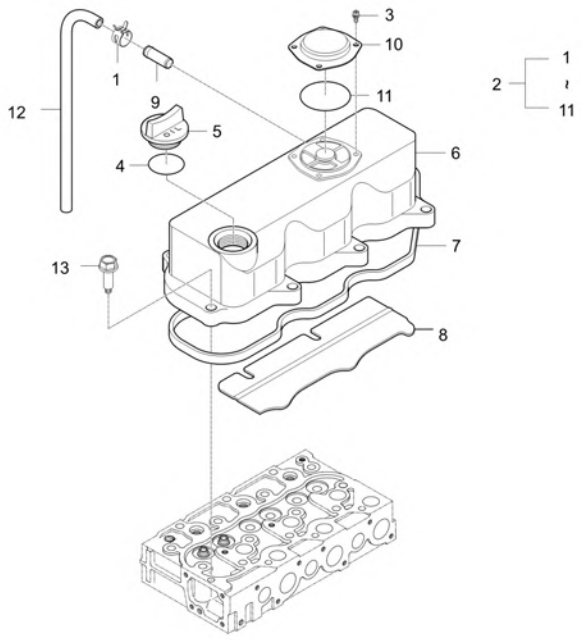

A : CK2610

No.	Part Number	Description	Qty A	Qty B	Qty C	Qty D	Qty E	I.C	Remark
1	09318-88180	CLAMP, HOSE	2						DIA18
2	E5850-14504	CYLINDER HEAD COVER ASSY	1						
3	03024-50510	SCREW, WASHER	4						M5XP0.8
4	04811-50300	O RING v	1						DIA29.4
5	E5500-33142	PLUG, OIL FILLER	1						-
6	E5850-14512	CYLINDER HEAD COVER v	1						
7	E5850-14522	GASKET, CYLINDER HEAD COVER	1						
8	E5850-14561	OIL PROTECTOR	1						
9	E6510-05552	CONNECTOR, AIR BREATHER HOSE	1						-
10	E6510-14532	COVER, VALVE	1						-
11	E6510-14671	O RING	1						-
12	E6510-05511	HOSE, AIR BREATHER v	1						
13	E6510-33661	BOLT, CYLINDER HEAD COVER v	8						

----> Old replace New
<---- New replace Old
<-X-> Not interchangeable
<---> Interchangeable
<-O-> Interchangeable with another part(s)
* Please place an order assy(*)

https://tractormanualz.com/

3A165LW-E100

CAMSHAFT GROUP

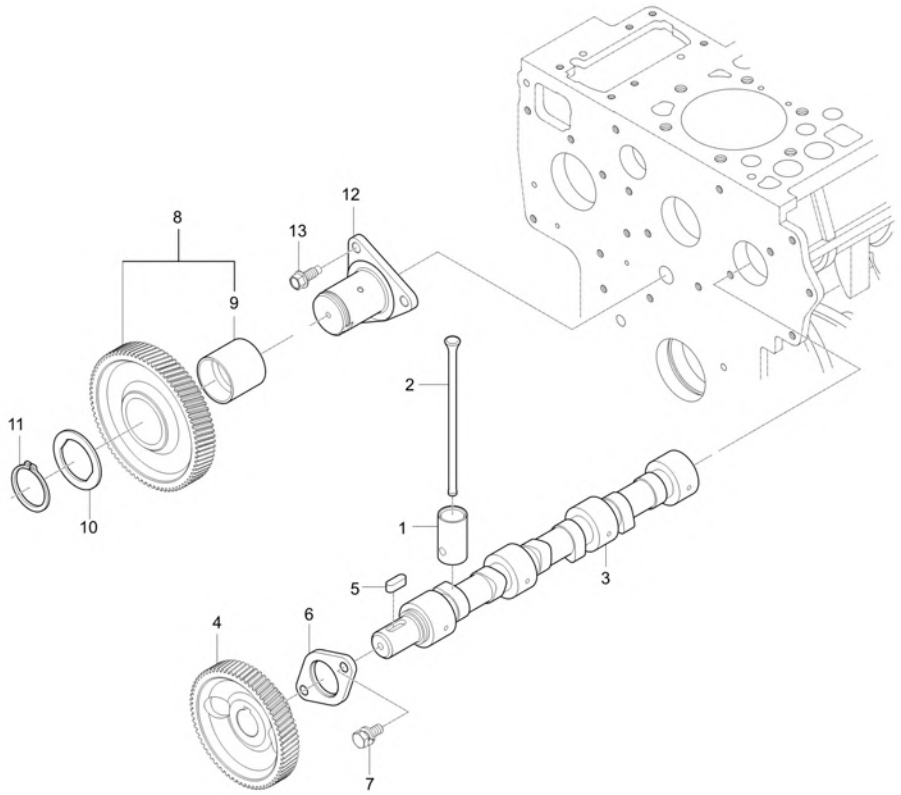

A : CK2610

No.	Part Number	Description	Qty A	Qty B	Qty C	Qty D	Qty E	I.C	Remark
1	E5500-15553	TAPPET	6						-
2	F6800-15111	ROD PUSH v	6						-
3	E5600-A0032	ASSY CAMSHAFT v	1						
4	15521-1651-1	USE 15521-16511	1						820G
5	05712-00720	KEY	1						W7XL20
6	E5500-16272	CAMSHAFT,STOPPER	1						
7	01123-50818	BOLT, WASHER	2						M8XP1.25
8	E6300-24012	ASSY, IDLE GEAR	1						
9	E6300-24281	BUSH, IDLE GEAR	1						
10	E6300-24371	COLLAR 2	1						
11	E6300-24321	SNAP RING	1						
12	E6300-24253	SHAFT GEAR,IDLE	1						
13	01754-50820	BOLT, FLANGE	3						M8XP1.25

----> Old replace New
<---> Interchangeable
* Please place an order assy(*)
<---- New replace Old
<-O-> Interchangeable with another part(s)
<-X-> Not interchangeable

https://tractormanualz.com/

EA1-G124003

FLYWHEEL GROUP

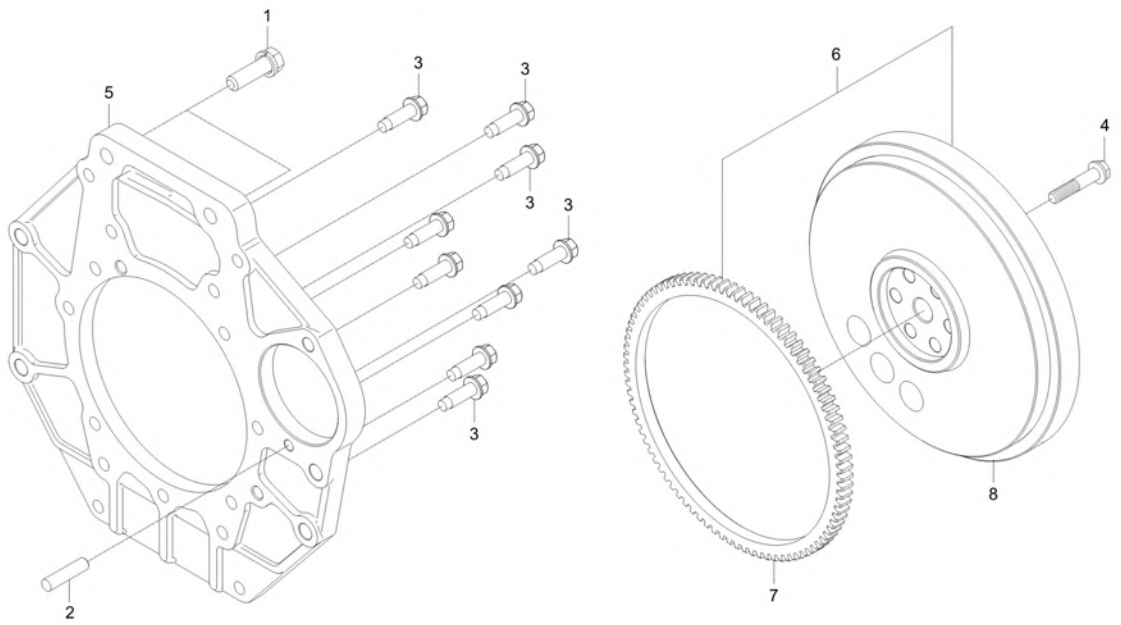

A : CK2610

No.	Part Number	Description	Qty A	Qty B	Qty C	Qty D	Qty E	I.C	Remark
1	01133-51240	BOLT, WASHER	2						M12XP1.25
2	01517-51028	STUD	1						M10XP1.25
3	01674-51032	FLANGE BOLT	11						
4	E5500-25164	BOLT, FLYWHEEL v	6						
5	E5863-04612	PLATE-REAR END	1						
6	EA11-0008B	ASSY FLYWHEEL	1						
6	EA11-0008C	ASSY FLYWHEEL	1					<------	
6	EA11-0008D	ASSY FLYWHEEL	1					<----->	
6	EA11-0008E	ASSY FLYWHEEL	1					<----->	
7	E7103-63821	GEAR RING (use 15221-63824) dnr v	1						
8	EA11-0007A	FLYWHEEL	1						-
8	EA11-0007C	FLYWHEEL	1					<------	-
8	EA11-0007D	FLYWHEEL	1					<----->	-
8	EA11-0007E	FLYWHEEL	1					<----->	-

----> Old replace New
<---- New replace Old
<-X-> Not interchangeable
<---> Interchangeable
<-O-> Interchangeable with another part(s)
* Please place an order assy(*)

https://tractormanualz.com/

3A150LW-E140

FUEL CAMSHAFT GROUP

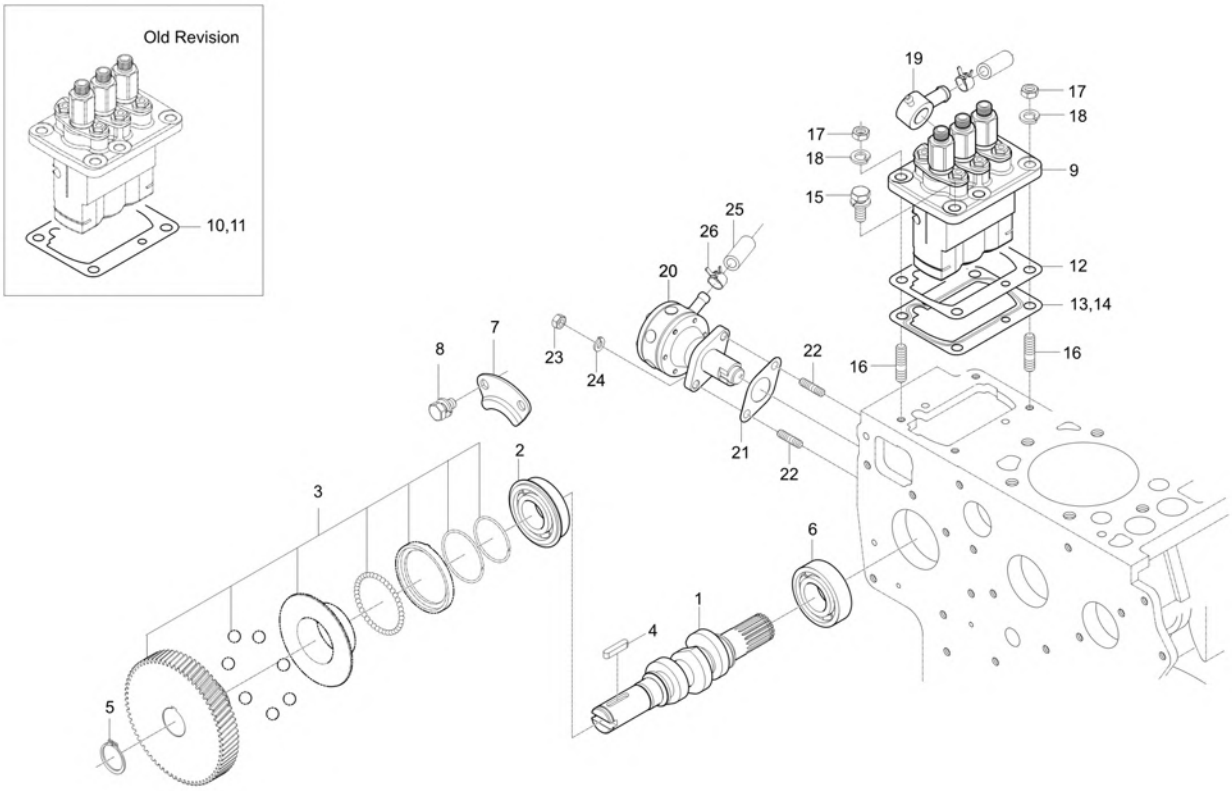

A : CK2610

No.	Part Number	Description	Qty A	Qty B	Qty C	Qty D	Qty E	I.C	Remark
1	E5640-16171	CAMSHAFT,FUEL	1						
2	08153-06205	BEARING,BALL	1						#6205NRC3
3	E6300-51052	ASS'Y INJECTION PUMP GEAR v	1						
3	E6300-51053	INJECTION PUMP GEAR ASSY v	1					<------	
4	05712-00525	KEY	1						7*7*29
5	04612-00240	SNAP RING	1						
6	08240-00001	BEARING,BALL	1						3205A
7	15221-1632-1	FUEL CAMSHAFT STOPPER	1						T2.5*62*35
8	01123-50814	BOLT, WASHER	2						M8XP1.25
9	E5800-51016	INJECTION PUMP ASSY v	1						
9	E5640-51011	ASSY PUMP,INJECTION	1					<--X-->	
10	E5500-52112	SHIM, INJECTION PUMP	99						T0.15*80*103
11	E5500-52122	SHIM, INJECTION PUMP dnr v	99						T0.3
12	E5800-52111	SHIM 3, INJECTION PUMP v	99						
13	E8103-52111	SHIM,INJECTION PUMP v	2						0.28t
14	E5603-52111	SHIM,INJECTION PUMP v	2						0.38t
15	01123-50822	WASHER BOLT	2						M8XP1.25
16	01513-50822	STUD	2						M8XP1.25

----> Old replace New
<---> Interchangeable
* Please place an order assy(*)
<---- New replace Old
<-O-> Interchangeable with another part(s)
<-X-> Not interchangeable

https://tractormanualz.com/

3A150LW-E140

FUEL CAMSHAFT GROUP

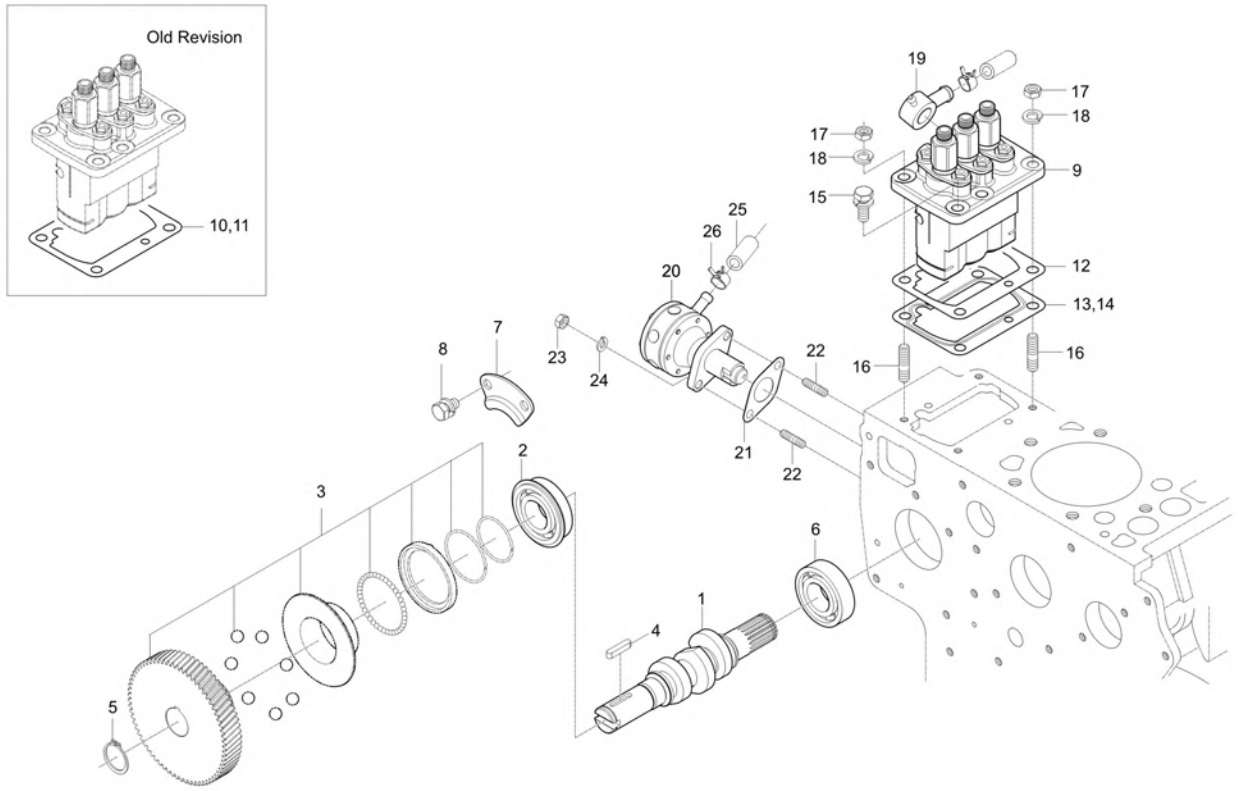

A : CK2610

No.	Part Number	Description	Qty A	Qty B	Qty C	Qty D	Qty E	I.C	Remark
17	02156-50080	NUT v	2						M8XP1.25
18	04512-50080	SPRING WASHER	2						M08
19	E6500-42413	JOINT, FUEL PIPE	1						
19	E6500-42414	JOINT, FUEL PIPE	1					<------	
20	E5775-52031	FUEL PUMP ASSY	1						
20	E5775-52032	FUEL PUMP ASSY	1					<----->	
21	E6200-52142	GASKET, FUEL PUMP	1						t0.5
22	01513-50618	STUD	2						M6*1.0
23	02056-50060	NUT	2						M6XP1.0
24	04512-50060	WASHER, SPRING	2						M06
25	15371-4217-0	HOSE 1, FUEL	1						
26	14911-4275-1	CLIP, TUBE	2						T0.8*#12

----> Old replace New
<---> Interchangeable
* Please place an order assy(*)
<---- New replace Old
<-O-> Interchangeable with another part(s)
<-X-> Not interchangeable

https://tractormanualz.com/

3B183-E150

SPEED CONTROL LEVER GROUP

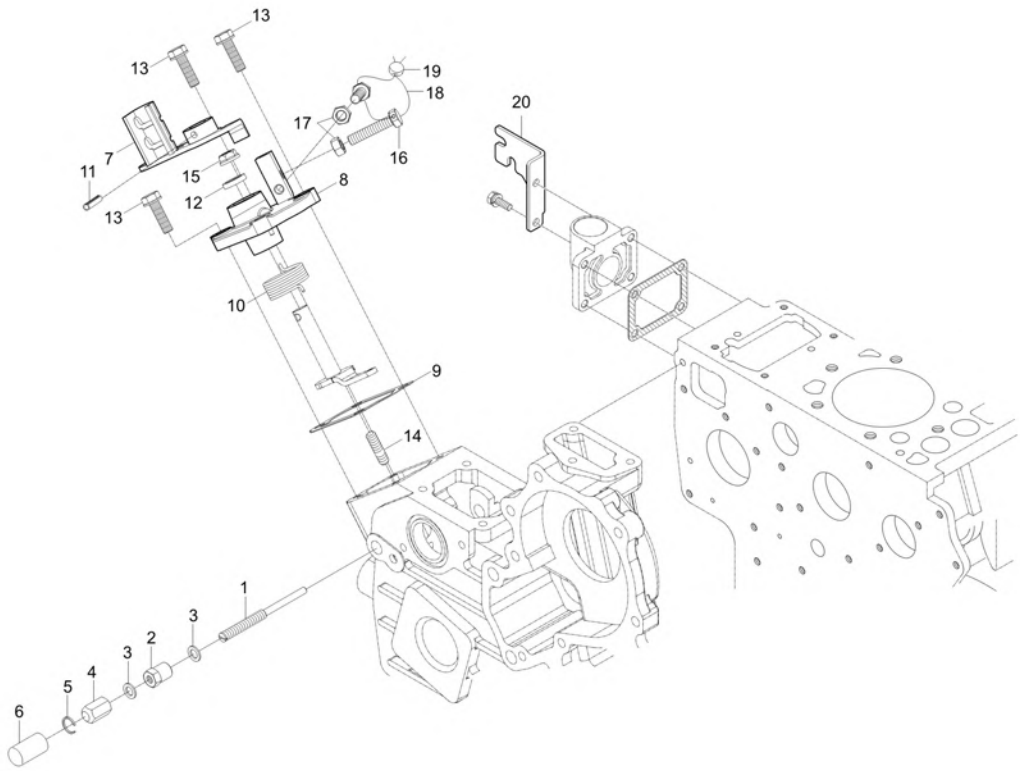

A : CK2610

No.	Part Number	Description	Qty A	Qty B	Qty C	Qty D	Qty E	I.C	Remark
1	E6301-54122	ADJUSTING BOLT	1						
2	E6305-92021	NUT	1						
3	E6305-96652	GASKET	2						
4	E6305-54221	CAP NUT	1						
5	E6305-54281	SNAP RING	1						D=0.8
6	E6305-54421	CAP	1						D=12,T=1.0
7	E5850-57154	LEVER,SPEED CONTROL	1						
8	E5850-57112	PLATE, SPEED CONTROL v	1						
9	E5850-57212	GASKET, SPEED CONTROL PLATE	1						
10	E5850-57922	SPRING v	1						
11	05411-00420	PIN, SPRING	1						DIA4.4XL20
12	15471-5798-1	SEAL, OIL	1						
13	01754-50620	BOLT, FLANGE	3						M6XP1.0
14	15221-8821-1	STUD	1						DIA6,M6*1.0 *32
15	02751-50060	NUT, FLANGE	1						M6XP1.0
16	15108-5728-4	STOPPER	2						HEX10,M6*1 .0
16	15108-5728-5	SCREW, STOPPER	2					<------	HEX10,M6*1 .0
17	02056-50060	NUT	2						M6XP1.0

----> Old replace New
<---- New replace Old
<-X-> Not interchangeable
<---> Interchangeable
<-O-> Interchangeable with another part(s)
* Please place an order assy(*)

https://tractormanualz.com/

3B183-E150

SPEED CONTROL LEVER GROUP

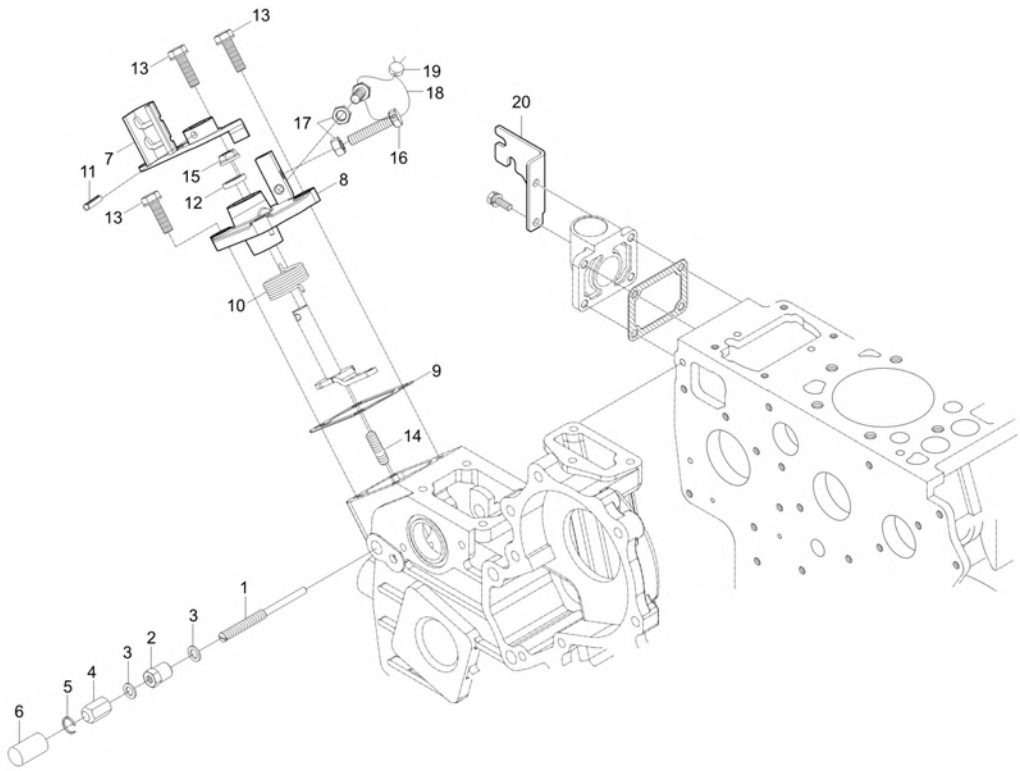

A : CK2610

No.	Part Number	Description	Qty A	Qty B	Qty C	Qty D	Qty E	I.C	Remark
18	07811-10820	WIRE	1						
19	07918-00001	LEAD, SEALING	1						
20	E5627-57482	BRACKET, CABLE	1						

----> Old replace New
<---- New replace Old
<-X-> Not interchangeable
<---> Interchangeable
<-O-> Interchangeable with another part(s)
* Please place an order assy(*)

https://tractormanualz.com/

EA1-G111502

FUEL EQUIPMENT GROUP

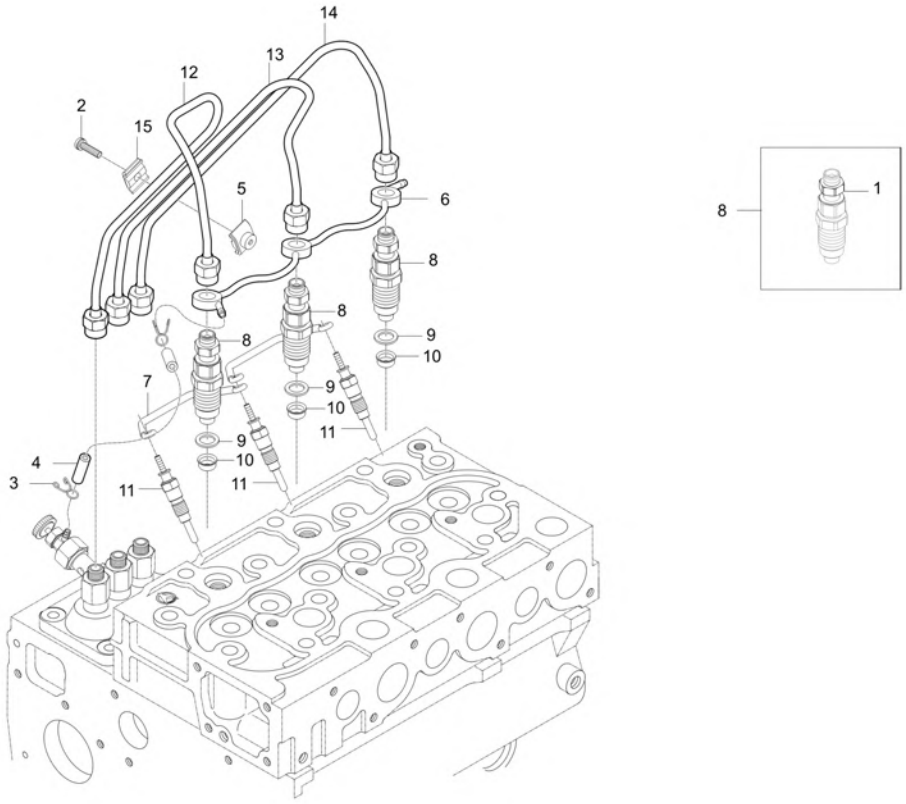

A : CK2610

No.	Part Number	Description	Qty A	Qty B	Qty C	Qty D	Qty E	I.C	Remark
1	02761-50040	NUT, FLANGE	3						M4XP0.7
2	03024-50520	SCREW, WASHER	2						DIA10*28
3	09318-88080	CLMAP, HOSE	2						
4	09661-40300	FUEL TUBE v	1						
5	15121-5385-2	CLAMP 1, TUBE dnr v	2						-
6	E5800-42501	HOSE, OVER FLOW	1						
6	E5800-42502	OVERFLOW HOSE ASSY	1					<------	
7	E5800-65562	CORD,GLOW PLUG	1						T1.5
8	E6300-53005	NOZZLE HOLDER ASSY v	3						
8	E5760-53001	ASSY HOLDER,NOZZLE 1	3					<------	
9	E6300-53621	GASKET	3						
10	E6300-53651	SEAL, HEAT SHIELD	3						T0.8
11	E6303-65511	GLOW PLUG v	3						N
12	EA11-0010A	INJECTION PIPE 1	1						I.D.2mm
13	EA11-0011A	INJECTION PIPE 2	1						I.D.2mm
14	EA11-0012A	INJECTION PIPE 3	1						I.D.2mm
15	T4815-67371	HOLDER, TUBE	2						-

----> Old replace New
<---- New replace Old
<-X-> Not interchangeable
<---> Interchangeable
<-O-> Interchangeable with another part(s)
* Please place an order assy(*)

https://tractormanualz.com/

EA1-G151002

FUEL EQUIPMENT GROUP

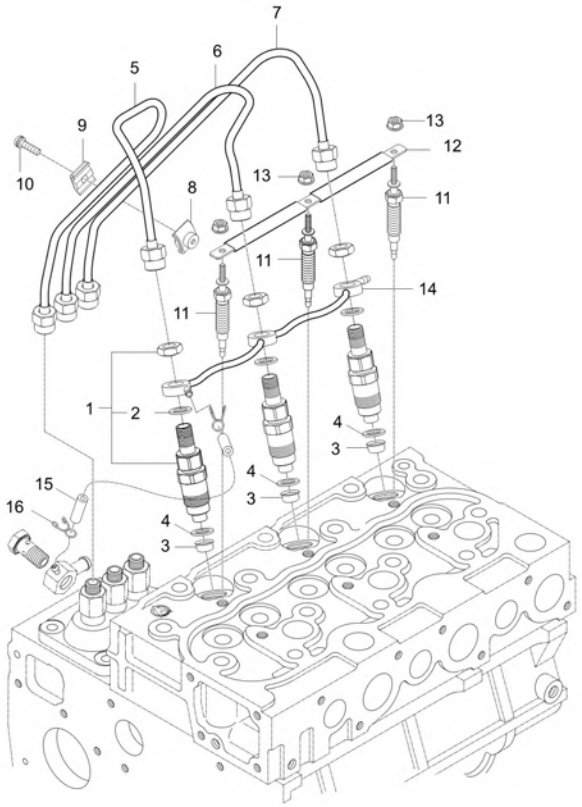

A : CK2610

No.	Part Number	Description	Qty A	Qty B	Qty C	Qty D	Qty E	I.C	Remark
1	E6300-53005	NOZZLE HOLDER ASSY v	3						
2	E6300-53021	GASKET	3						
3	E6300-53651	SEAL, HEAT SHIELD	3						T0.8
4	E6300-53621	GASKET	3						
5	EA11-0010A	INJECTION PIPE 1	1						I.D.2mm
6	EA11-0011A	INJECTION PIPE 2	1						I.D.2mm
7	EA11-0012A	INJECTION PIPE 3	1						I.D.2mm
8	15121-5385-2	CLAMP 1, TUBE dnr v	2						-
9	T4815-67371	HOLDER, TUBE	2						-
10	03024-50520	SCREW, WASHER	2						DIA10*28
11	E6303-65511	GLOW PLUG v	3						N
12	E5800-65562	CORD,GLOW PLUG	1						T1.5
13	02761-50040	NUT, FLANGE	3						M4XP0.7
14	E5800-42501	HOSE, OVER FLOW	1						
14	E5800-42502	OVERFLOW HOSE ASSY	1					<------	
15	09661-40300	FUEL TUBE v	1						
16	09318-88080	CLMAP, HOSE	2						

----> Old replace New
<---- New replace Old
<-X-> Not interchangeable
<---> Interchangeable
<-O-> Interchangeable with another part(s)
* Please place an order assy(*)

https://tractormanualz.com/

4B243LW-E160

ENGINE STOP LEVER GROUP

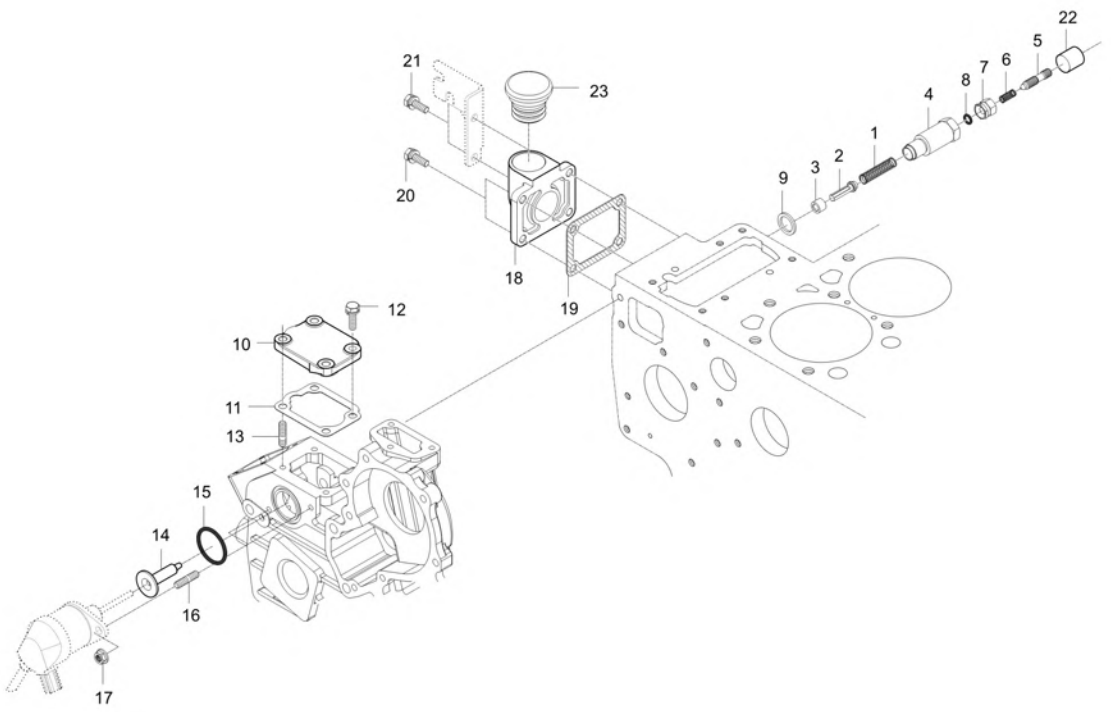

A : CK2610

No.	Part Number	Description	Qty A	Qty B	Qty C	Qty D	Qty E	I.C	Remark
1	E5850-54261	SPRING	1						
2	E5850-54272	SHAFT, IDLE ADJUSTMENT	1						
2	E5850-54273	SHAFT, IDLE ADJUSTMENT	1					<------	
2	E5850-54274	SHAFT, IDLE ADJUSTMENT	1					<----->	
3	E5850-54282	BUSH	1						
3	E5850-54283	BUSH	1					<------	
4	E5850-54291	ADJUSTMENT BODY, IDLE dnr v	1						
4	E5850-54292	ADJUSTMENT BODY, IDLE dnr v	1					<------	
5	E5850-54252	IDEL ADJUSTING BOLT v	1						
5	E5850-54253	IDEL ADJUSTING BOLT	1					<------	
6	15521-5426-1	SPRNG	1						DIA0.5
7	E5850-92011	NUT	1						
8	04811-00060	O RING	1						
9	04724-00140	PACKING	1						
10	E6850-57313	COVER, ENGINE STOP LEVER	1						
11	E5850-57212	GASKET, SPEED CONTROL PLATE	1						
12	01754-50616	BOLT, FLANGE v	2						M6XP1.0
13	15221-8821-1	STUD	2						DIA6,M6*1.0 *32

----> Old replace New
<---- New replace Old
<-X-> Not interchangeable
<---> Interchangeable
<-O-> Interchangeable with another part(s)
* Please place an order assy(*)

https://tractormanualz.com/

4B243LW-E160

ENGINE STOP LEVER GROUP

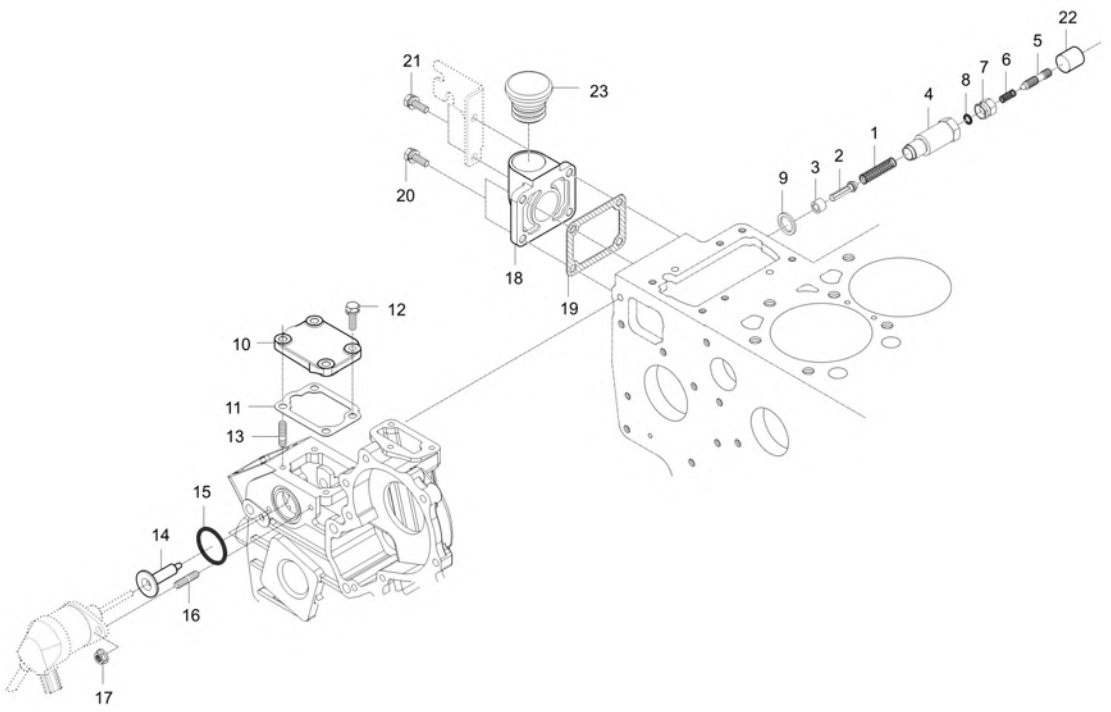

A : CK2610

No.	Part Number	Description	Qty A	Qty B	Qty C	Qty D	Qty E	I.C	Remark
14	E5850-56605	ENGINE STOP SOLENOID GUIDE v	1						
15	04814-06310	O RING	1						
16	01513-50614	STUD	2						
17	02761-50060	NUT, FLANGE	2						M6XP1.0
18	E5850-33111	OIL INPUT COVER	1						
19	E5500-51662	GASKET v	1						t1.0
20	01754-50616	BOLT, FLANGE v	2						M6XP1.0
21	01754-50620	BOLT, FLANGE	2						M6XP1.0
22	E5205-54271	CAP	1						T0.5*60*60
23	E5800-33144	PLUG, OIL	1						

----> Old replace New <---- New replace Old <-X-> Not interchangeable
<---> Interchangeable <-O-> Interchangeable with another part(s)
* Please place an order assy(*)

https://tractormanualz.com/

EA1-G113502

GOVERNOR GROUP

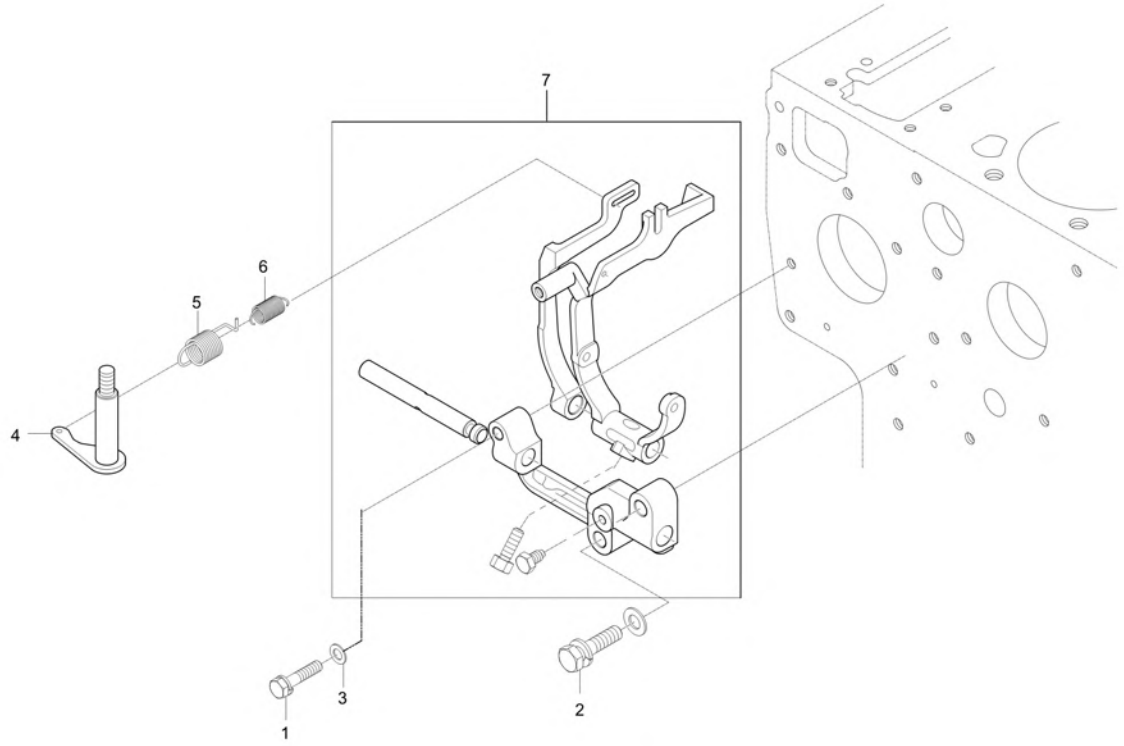

A : CK2610

No.	Part Number	Description	Qty A	Qty B	Qty C	Qty D	Qty E	I.C	Remark
1	01023-50628	BOLT, WASHER	1						HEX10*38
2	01754-50830	BOLT FLANGE	2						M8XP1.25
3	04012-50060	PLAIN WASHER	1						M6
4	E5850-56021	ASSY LEVER,GOVERNOR v	1						
5	E6300-56414	SPRING GOVERNOR 1 v	1						
6	E6313-56421	SPRING2, GOVERNOR	1						
7	EA11-0004C	ASSY LEVER, FORK	1						

----> Old replace New <---- New replace Old <-X-> Not interchangeable
<---> Interchangeable <-O-> Interchangeable with another part(s)
* Please place an order assy(*)

https://tractormanualz.com/

3A165SV-E180

WATER PUMP GROUP

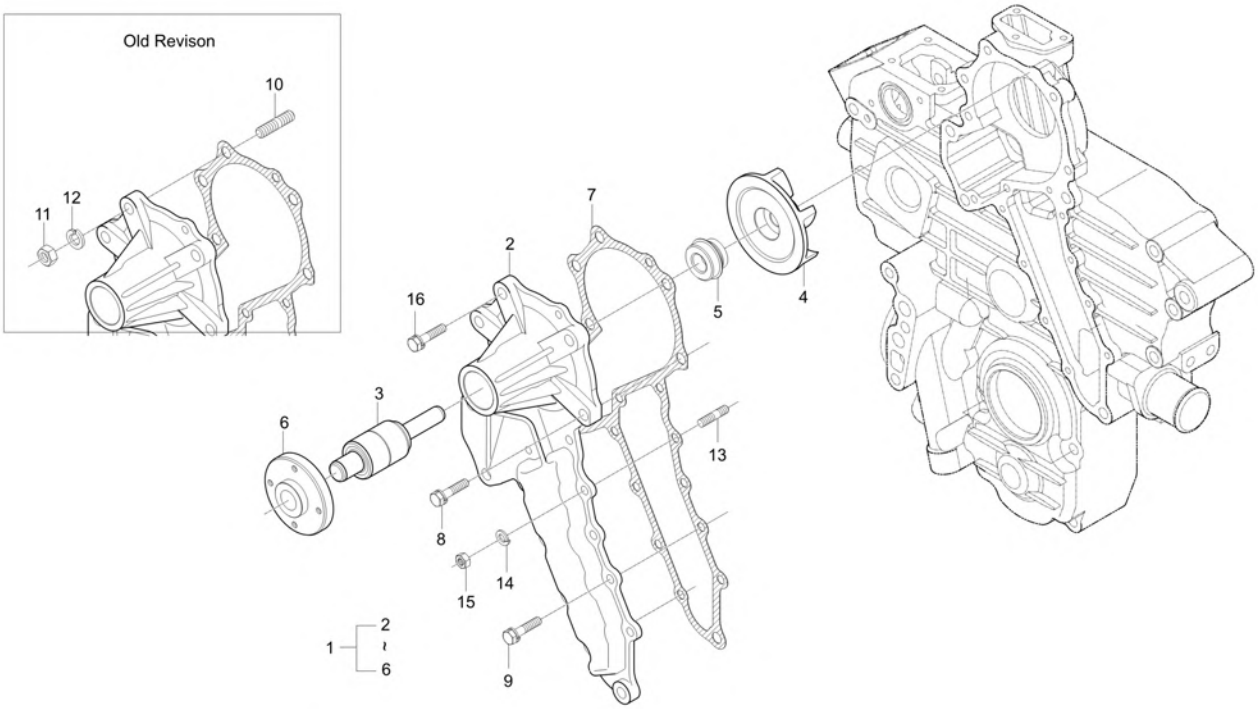

A : CK2610

No.	Part Number	Description	Qty A	Qty B	Qty C	Qty D	Qty E	I.C	Remark
1	E5800-73037	ASSY PUMP,WATER V	1						
2	E5800-73415	BODY, WATER PUMP BODY v	1						
3	E5800-73551	BEARING, WATER PUMP	1						D607010RSE
4	E5800-73513	IMPELLAR v	1						
5	E5800-73052	MECHANICAL SEAL ASSY v	1						
6	E5800-73522	FLANGE	1						
7	E5800-73432	GASKET, WATER PUMP	1						
8	01123-50828	BOLT	4						
9	01023-50618	BOLT w- WASHER	8						M6XP1.0
10	01518-50822	STUD	1						
11	02156-50080	NUT v	1						M8XP1.25
12	04512-50080	SPRING WASHER	1						M08
13	15221-8821-1	STUD	1						DIA6,M6*1.0*32
14	04512-50060	WASHER, SPRING	1						M06
15	02056-50060	NUT	1						M6XP1.0
16	01123-50828	BOLT	1						

----> Old replace New
<----> Interchangeable
* Please place an order assy(*)
<---- New replace Old
<-O-> Interchangeable with another part(s)
<-X-> Not interchangeable

https://tractormanualz.com/

EA1-G114002

WATER FLANGE GROUP

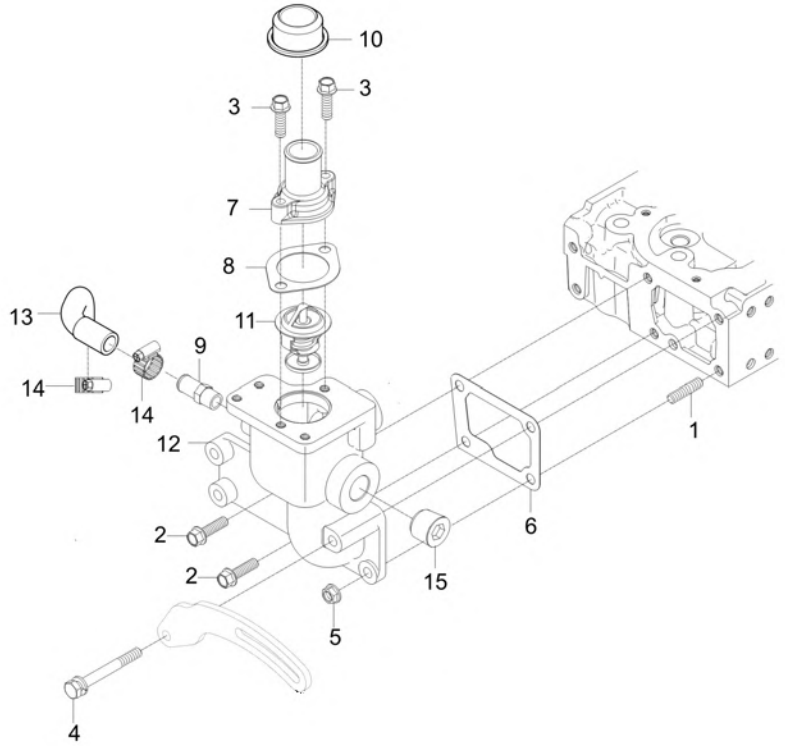

A : CK2610

No.	Part Number	Description	Qty A	Qty B	Qty C	Qty D	Qty E	I.C	Remark
1	01513-50822	STUD	1						M8XP1.25
2	01754-50820	BOLT, FLANGE	2						M8XP1.25
3	01754-50835	BOLT v	2						M8XP1.25
4	01754-50870	FLANGE BOLT	1						M8*P1.25
5	02763-50080	FLANGE NUT	1						M8XP1.25
6	E5500-72922	GASKET v	1						t0.5
7	E5500-73265	COVER THERMOSTAT v	1						
8	E5500-73272	GASKET v	1						t1.0
9	E5500-73342	HOSE, WATER RETURN v	1						
9	E5500-73343	PIPE, WATER RETURN	1					<------	
10	E5500-74213	COVER, WATER HOSE	1						
11	E5853-73011	THERMOSTAT ASSEMBLY	1						
12	E6850-72913	PLANGE, WATER	1						
13	E6850-73342	HOSE, WATER PUMP v	1						
14	F6800-91831	BAND, HOSE	2						
14	E5700-73361	BAND, HOSE	2					<--X-->	
14	E5700-73362	BAND, HOSE	2					<------	
15	F6860-96042	PLUG	1						PT1/2

----> Old replace New
<---- New replace Old
<-X-> Not interchangeable
<---> Interchangeable
<-O-> Interchangeable with another part(s)
* Please place an order assy(*)

https://tractormanualz.com/

EA1-G125002

COOLING FAN GROUP

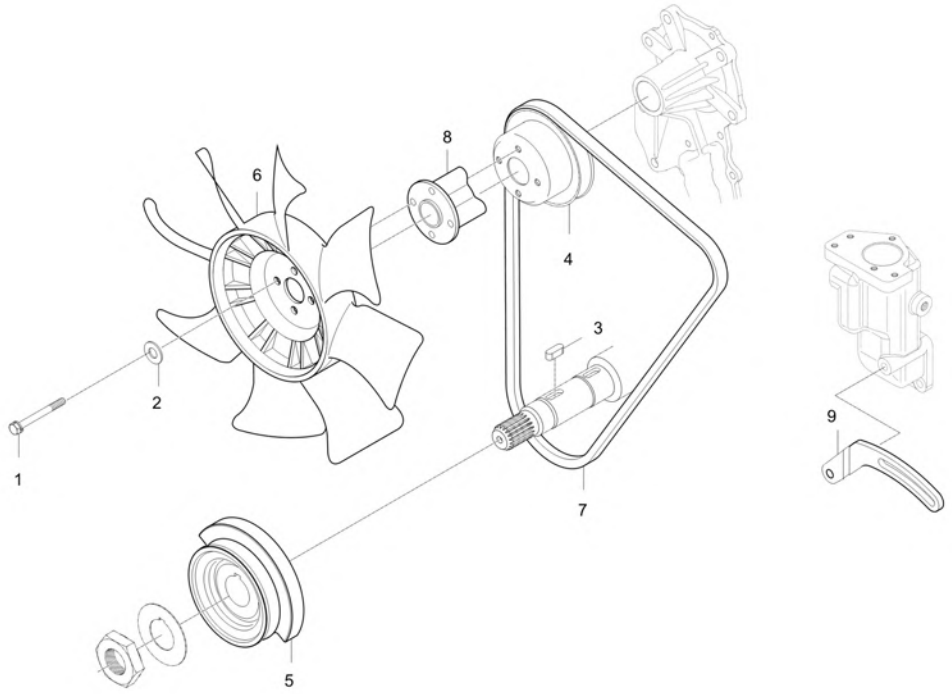

A : CK2610

No.	Part Number	Description	Qty A	Qty B	Qty C	Qty D	Qty E	I.C	Remark
1	01023-50680	BOLT v	4						
2	04012-50060	PLAIN WASHER	4						M6
3	05712-00720	KEY	1						W7XL20
4	E6790-74251	PULLEY, FAN	1						
5	EA11-0001A	PULLEY, FAN DRIVE	1						-
6	E5629-74111	COOLING FAN v	1						
7	E6857-72531	BELT,FAN	1						
8	E5850-74151	COLLAR,FAN	1						
9	EA11-0019A	SUPPORT, ALTERNATOR	1						t4.5

----> Old replace New
<---- New replace Old
<-X-> Not interchangeable
<---> Interchangeable
<-O-> Interchangeable with another part(s)
* Please place an order assy(*)

https://tractormanualz.com/

EA1-G121002

EXHAUST MANIFOLD GROUP

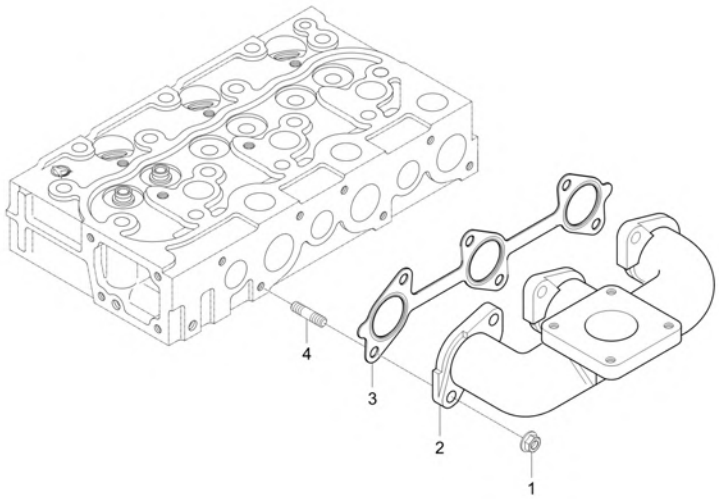

A : CK2610

No.	Part Number	Description	Qty A	Qty B	Qty C	Qty D	Qty E	I.C	Remark
1	02751-50080	FLANGE NUT 8MMX1.25P	6						M8XP1.25
2	E5619-12311	MANIFOLD,EXHAUST v	1						
3	E5800-12352	GASKET, EXHAUST MANIFOLD	1						t0.25*2layer
4	F6800-92451	BOLT, STUD	6						M8*P1.25
4	F6800-92452	BOLT, STUD	6					<------	M8*P1.25

----> Old replace New
<---> Interchangeable
* Please place an order assy(*)
<---- New replace Old
<-O-> Interchangeable with another part(s)
<-X-> Not interchangeable

https://tractormanualz.com/

EA1-G132004

EPA LABEL GROUP

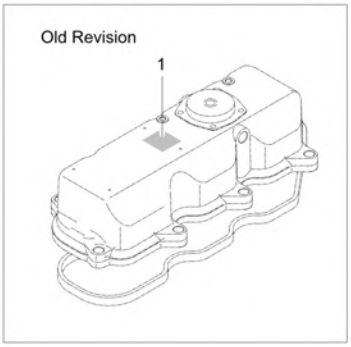

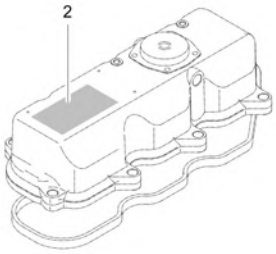

A : CK2610

No.	Part Number	Description	Qty A	Qty B	Qty C	Qty D	Qty E	I.C	Remark
1	F6805-99521	LABEL KIOTI	1						T=0.05-0.08
2	EA11-0025A	LABEL, EPA CERTIFICATE	1 RL9400003 ~ RL9400124						
2	EA11-0025B	LABEL, EPA CERTIFICATE	1 SL9400001 ~ SL9400542					<----->	
2	EA11-0025C	LABEL, EPA CERTIFICATE	1 TL9400001 ~ TL9400308					<------	
2	EA11-0025D	LABEL, EPA CERTIFICATE	1 UL9400001 ~ UL9400160					<------	
2	EA11-0025E	LABEL, EPA CERTIFICATE	1 VL9400001 ~ VL9400344					<------	
2	EA11-0025F	LABEL, EPA CERTIFICATE	1 WL9400001 ~ WL9400080					<------	

----> Old replace New
<---> Interchangeable
* Please place an order assy(*)
<---- New replace Old
<-O-> Interchangeable with another part(s)
<-X-> Not interchangeable

https://tractormanualz.com/

TC2-G211001

CLUTCH GROUP

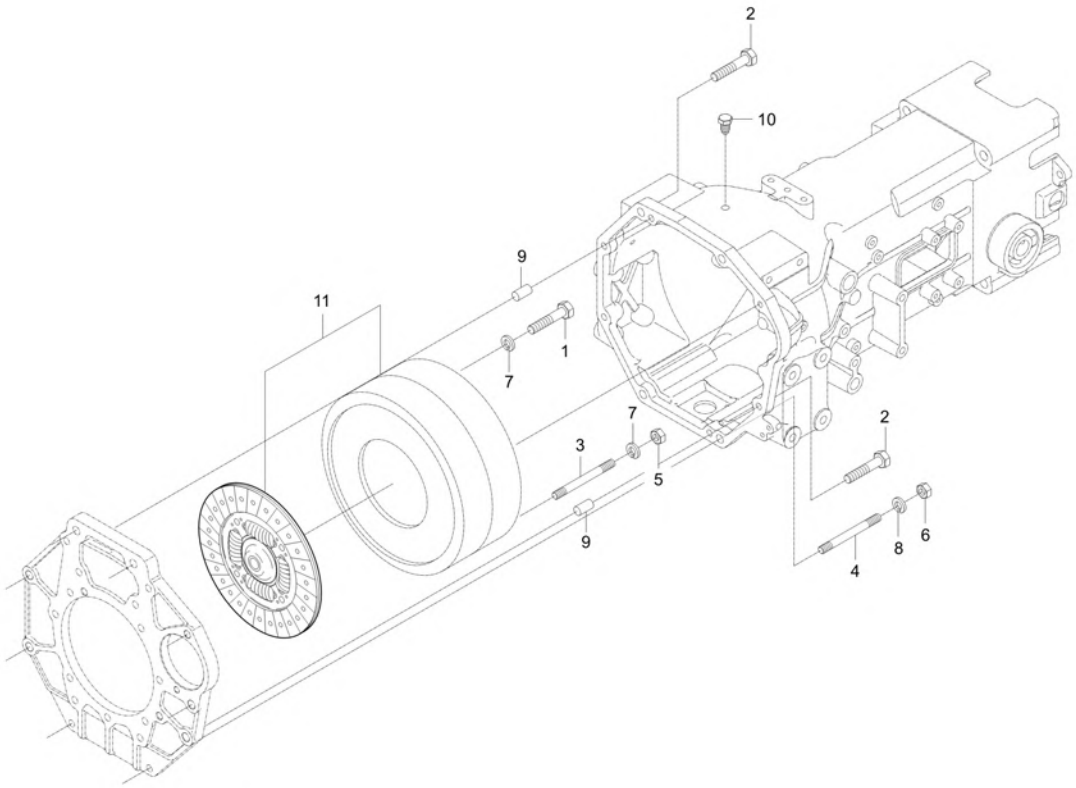

A : CK2610

No.	Part Number	Description	Qty A	Qty B	Qty C	Qty D	Qty E	I.C	Remark
1	01123-50880	WASHER BOLT	4						M8XP1.25
2	01177-51240	BOLT v	6						M12XP1.25 (9T/스프
3	01513-50880	STUD	2						
4	01574-51235	STUD	2						M12*1.25*30
5	02156-50080	NUT v	2						M8XP1.25
6	02176-50120	NUT	2						M12XP1.25
7	04512-50080	SPRING WASHER	2						M08
8	04512-50120	SPRING WASHER	2						M12
9	05012-01020	PIN, STRAIGHT	2						DIA10XL20
10	T2305-43883	PLUG v	1						
11	T5815-14353	COMP DISK,CLUTCH	1						225DW380

----> Old replace New <---- New replace Old <-X-> Not interchangeable
<---> Interchangeable <-O-> Interchangeable with another part(s)
* Please place an order assy(*)

https://tractormanualz.com/

TC2-G212003

CLUTCH RELEASE GROUP

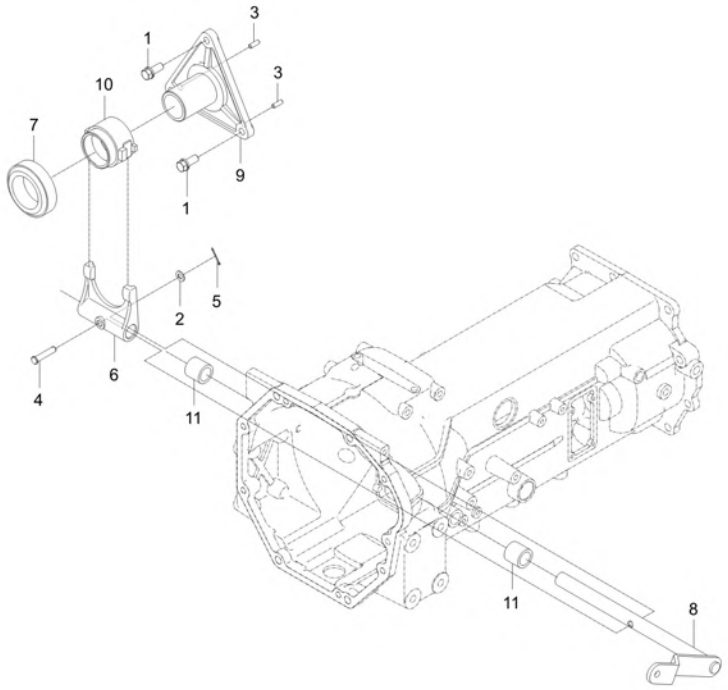

A : CK2610

No.	Part Number	Description	Qty A	Qty B	Qty C	Qty D	Qty E	I.C	Remark
1	01133-51025	BOLT	3						M10XP1.25
2	04012-50080	WASHER, PLAIN	1						M8
3	05012-00616	PIN, PARALLEL	2						DIA7
4	05112-50840	PIN,JOINT	1						
5	05511-50220	PIN, SPLIT	1						DIA1.8XL20
6	T2185-14723	FORK,CLUTCH RELEASE	1						
7	T2440-14971	BEARING,THRUST BALL	1						TK55-7 (NSK)
8	T5815-14711	LEVER	1						
9	T5815-14753	GUDIE, HUB	1						
10	T5815-14813	HUB,CLUTCH RELEASE	1						
11	08511-02025	BUSH	2						내경 DIA20XL25

----> Old replace New
<---- New replace Old
<-X-> Not interchangeable
<---> Interchangeable
<-O-> Interchangeable with another part(s)
* Please place an order assy(*)

https://tractormanualz.com/

TC2-G222001

CLUTCH HOUSING GROUP

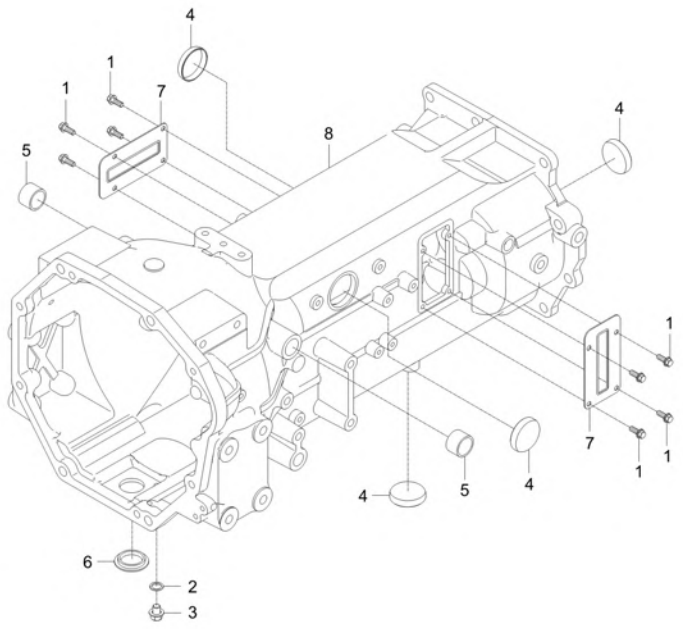

A : CK2610

No.	Part Number	Description	Qty A	Qty B	Qty C	Qty D	Qty E	I.C	Remark
1	01020-50614	BOLT	8						
2	04717-01000	WASHER, SEAL	1						M10
3	06331-45010	PLUG v	1						M10XP1.25
4	15221-0339-2	CAP SEALING	4						-
5	34150-2867-1	BUSH	2						-
6	38630-4484-3	PLUG	1						
7	41182-4123-1	COVER,TOP	2						T1.2*125*72
8	T5815-14113	HOUSING, CLUTCH	1						

----> Old replace New <---- New replace Old <-X-> Not interchangeable
<---> Interchangeable <-O-> Interchangeable with another part(s)
* Please place an order assy(*)

https://tractormanualz.com/

TC2-G224005

TRANSMISSION CASE GROUP

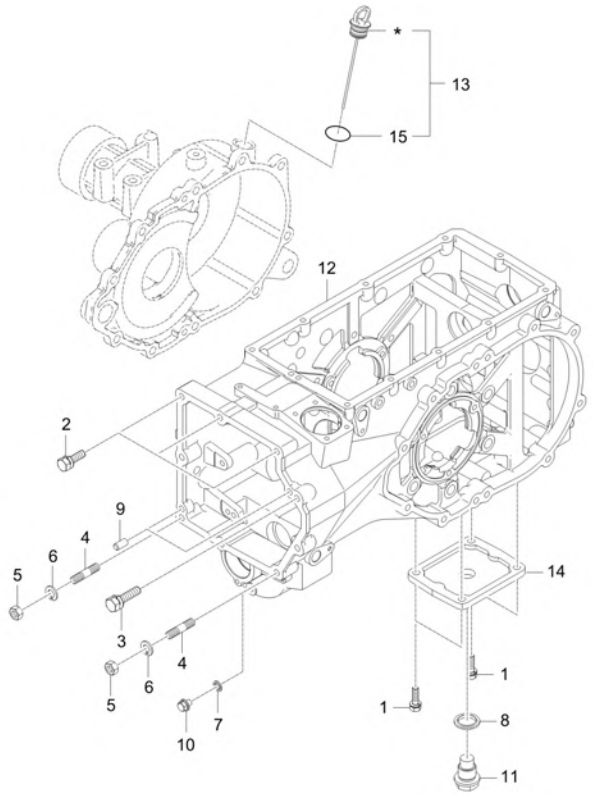

A : CK2610

No.	Part Number	Description	Qty A	Qty B	Qty C	Qty D	Qty E	I.C	Remark
1	01177-51030	BOLT	4						M10XP1.25 (9T)
2	01177-51235	BOLT v	7						M12XP1.25
3	01177-51250	BOLT	1						M12XP1.25 (9T)
4	01574-51230	STUD	2						M12XP1.25
5	02176-50120	NUT	2						M12XP1.25
6	04512-50120	SPRING WASHER	2						M12
7	04717-01000	WASHER, SEAL	1						M10
8	04717-02650	WASHER, SEAL	1						PS3/4
9	05012-01020	PIN, STRAIGHT	2						DIA10XL20
10	06331-45010	PLUG v	1						M10XP1.25
11	T4125-14261	PLUG	1						
12	T5815-21114	CASE, TRANSMISSION	1						
12	T5815-21115	CASE,TRANSMISSION	1					<--O-->	
12	T5815-21116	CASE,TRANSMISSION	1					<------	
13	T5815-23973	GAUGE OIL	1						
13	T5815-23974	GAUGE,OIL	1					<------	
14	T5815-24171	COVER	1						
15	04811-00200	O RING v	2						DIA19.8

----> Old replace New
<----> Interchangeable
* Please place an order assy(*)
<---- New replace Old
<-O-> Interchangeable with another part(s)
<-X-> Not interchangeable

https://tractormanualz.com/

TC2-G232003

DRIVE SHAFT GROUP

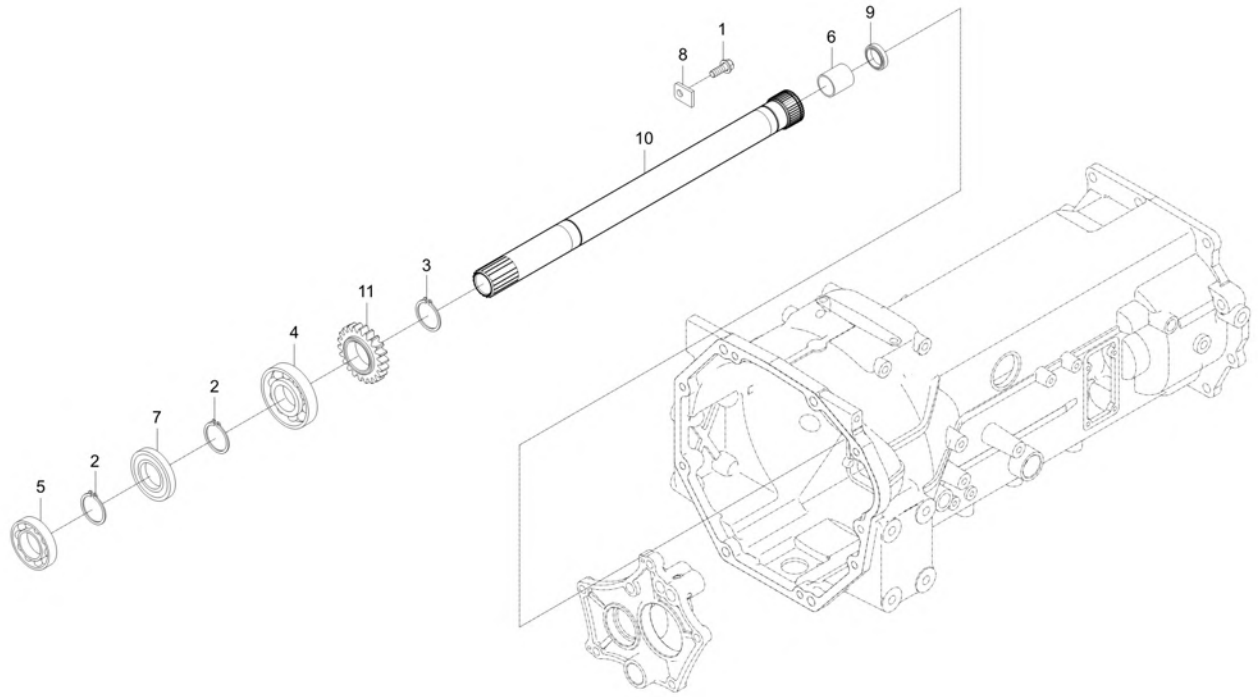

A : CK2610

No.	Part Number	Description	Qty A	Qty B	Qty C	Qty D	Qty E	I.C	Remark
1	01754-50816	BOLT, FLANGE	2						M8XP1.25
1	01754-50816	BOLT, FLANGE	1					<------	M8XP1.25
2	04612-00350	CIR CLIP, EXTERNAL	2						DIA35
3	04612-00400	CIR CLIP, EXTERNAL	1						
4	08101-06207	BEARING BALL	1						DIA35
5	08141-06007	BEARING, BALL v	1						6007UU
6	08511-02520	BUSHING	1						MB2520DU
7	09500-35558	SEAL,OIL	1						
8	T2350-23132	STOPPER	1						T3.2
9	T2440-21361	SEAL, OIL	1						
10	T5815-21401	SHAFT,MAIN	1						
11	T5815-21411	GERA 22	1						

----> Old replace New <---- New replace Old <-X-> Not interchangeable
<---> Interchangeable <-O-> Interchangeable with another part(s)
* Please place an order assy(*)

https://tractormanualz.com/

TC2-G241001

MAIN SHIFT SHAFT GROUP

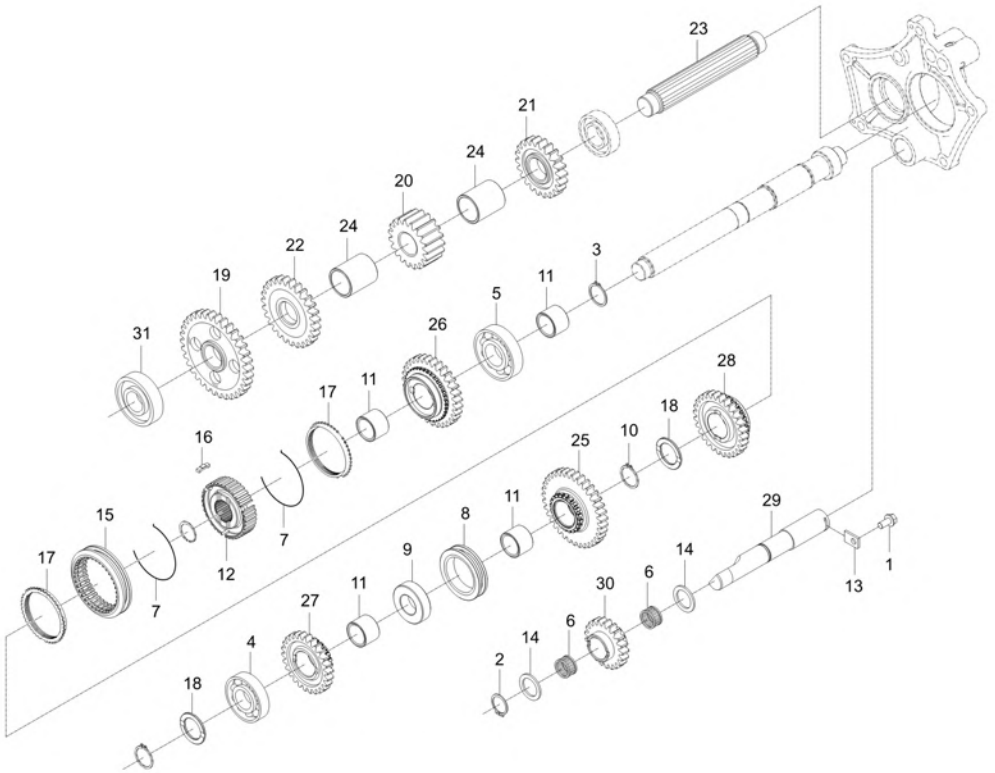

A : CK2610

No.	Part Number	Description	Qty A	Qty B	Qty C	Qty D	Qty E	I.C	Remark
1	01754-50816	BOLT, FLANGE	1						M8XP1.25
2	04612-00250	CIR-CLIP	1						DIA25
3	04612-00300	SNAP RING	1						DIA30
4	08101-06205	BEARING BALL dnr v	1						DIA25
5	08101-06306	BEARING, BALL	1						DIA30
6	08822-53017	NEEDLE BEARING	2						내경DIA25
7	38360-2178-1	SYNCHRONIZER SPRING	2						DIA1.2
8	38430-2175-1	SHIFT	1						
9	38430-2177-1	BOSS, SPLINE	1						
10	38430-2554-1	RING, SNAP	1						
11	38435-2178-1	RING, IN	4						
12	T2185-21651	HUB, SYNCHRO	1						
13	T2350-23132	STOPPER	1						T3.2
14	T2555-25311	COLLAR, THRUST	2						
15	T2610-21754	SHIFTER	1						
16	T2610-21812	SYNCHRONIZER KEY	3						
17	T4240-21792	RING, SYNCHRONIZER	2						
18	T4810-22581	COLLAR, THRUST	2						

----> Old replace New <---- New replace Old <-X-> Not interchangeable
<---> Interchangeable <-O-> Interchangeable with another part(s)
* Please place an order assy(*)

https://tractormanualz.com/

TC2-G241001

MAIN SHIFT SHAFT GROUP

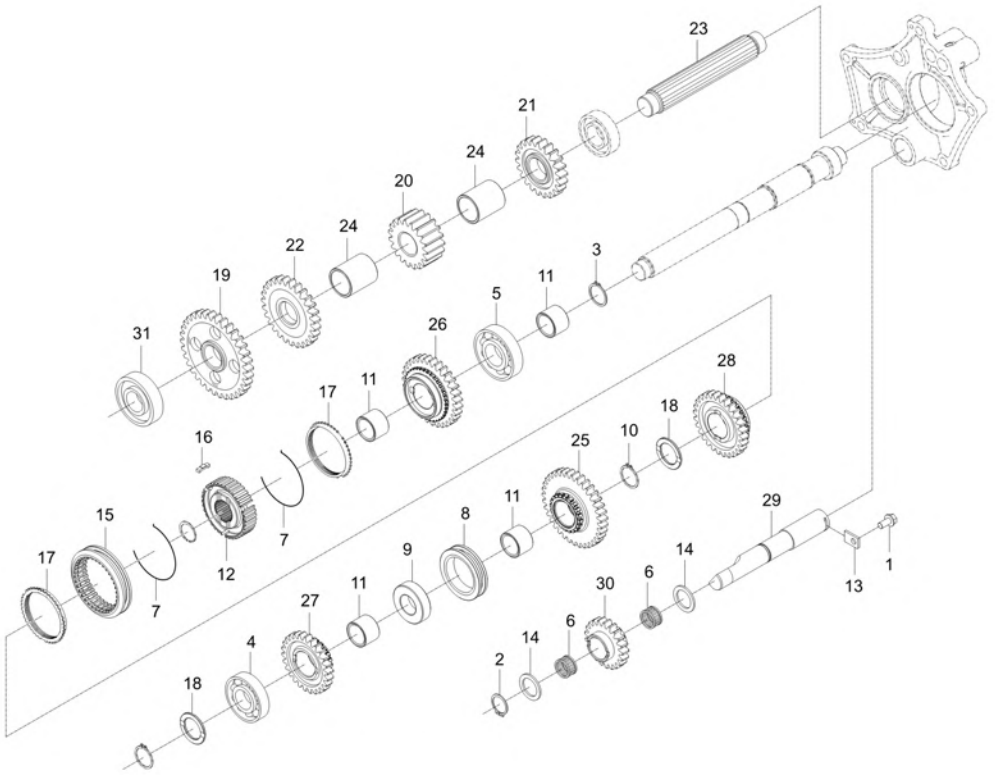

A : CK2610

No.	Part Number	Description	Qty A	Qty B	Qty C	Qty D	Qty E	I.C	Remark
19	T5815-21421	GEAR34	1						
20	T5815-21511	GEAR 19	1						
21	T5815-21521	GERA 22	1						
22	T5815-21531	GEAR,27	1						
23	T5815-21561	SHAFT,COUNTER	1						
24	T5815-21571	BUSHING	2						
25	T5815-21611	GEAR,35	1						
26	T5815-21621	GEAR 31	1						
27	T5815-21631	GEAR 26	1						
28	T5815-21641	GEAR, 28	1						
29	T5815-22711	SHAFT,REVERSE	1						
30	T5815-22721	GEAR 21	1						
31	08101-06305	BEARING,BALL v	1						DIA25

----> Old replace New <---- New replace Old <-X-> Not interchangeable
<---> Interchangeable <-O-> Interchangeable with another part(s)
* Please place an order assy(*)

https://tractormanualz.com/

TC2-G242001

MAIN SHIFT FORK GROUP

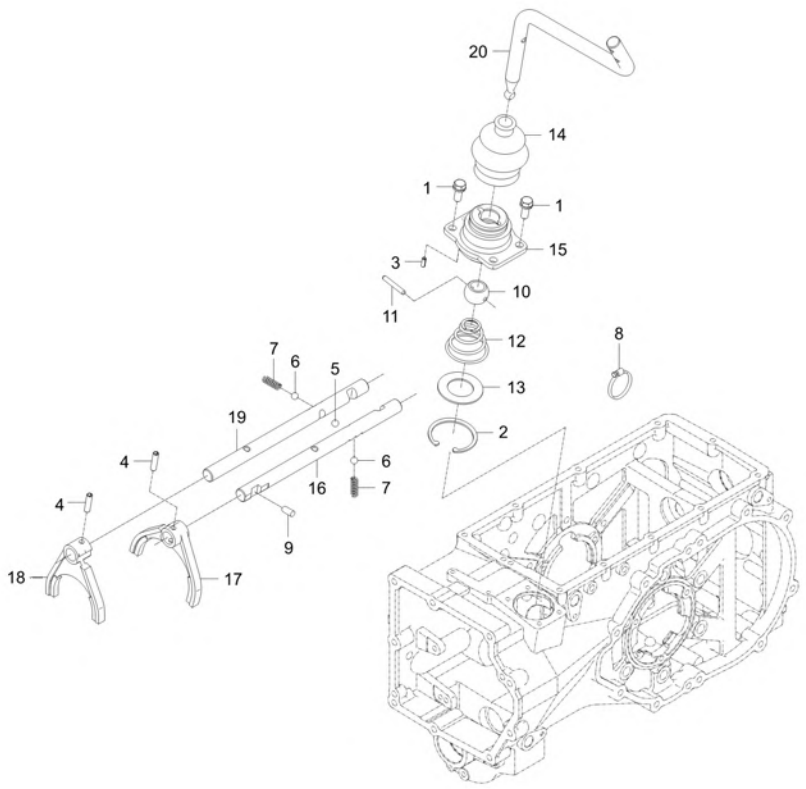

A : CK2610

No.	Part Number	Description	Qty A	Qty B	Qty C	Qty D	Qty E	I.C	Remark
1	01123-50820	BOLT, WASHER v	4						M8XP1.25
2	04611-00520	SNAP RING	1						DIA52
3	05411-00412	OB PIN,SPRING	1						
4	05411-00625	PIN, SPRING v	2						DIA6.4XL25
5	07715-00401	BALL v	1						
6	07715-01605	BALL,STEEL	2						DIA7.9375
7	62331-1853-2	SPRING	2						DIA1.4
8	E7300-11781	CLAMP, HOSE	1						DIA65스탠 65#
9	T2555-22291	PIN	1						
10	T5715-21331	BALL	1						
11	T5715-21341	PIN	1						
11	T5715-21342	PIN dnr v	1					<----->	
12	T5715-21361	SPRING,CONE	1						
13	T5715-21371	WASHER	1						
13	T5715-21372	Washer, Plain	1					<------	
14	T5715-21381	BOOT dnr v	1						
14	T5715-21382	JABARA dnr v	1					<------	
14	T5715-21383	JABARA v	1					<------	

----> Old replace New
<---> Interchangeable
* Please place an order assy(*)
<---- New replace Old
<-O-> Interchangeable with another part(s)
<-X-> Not interchangeable

https://tractormanualz.com/

TC2-G242001

MAIN SHIFT FORK GROUP

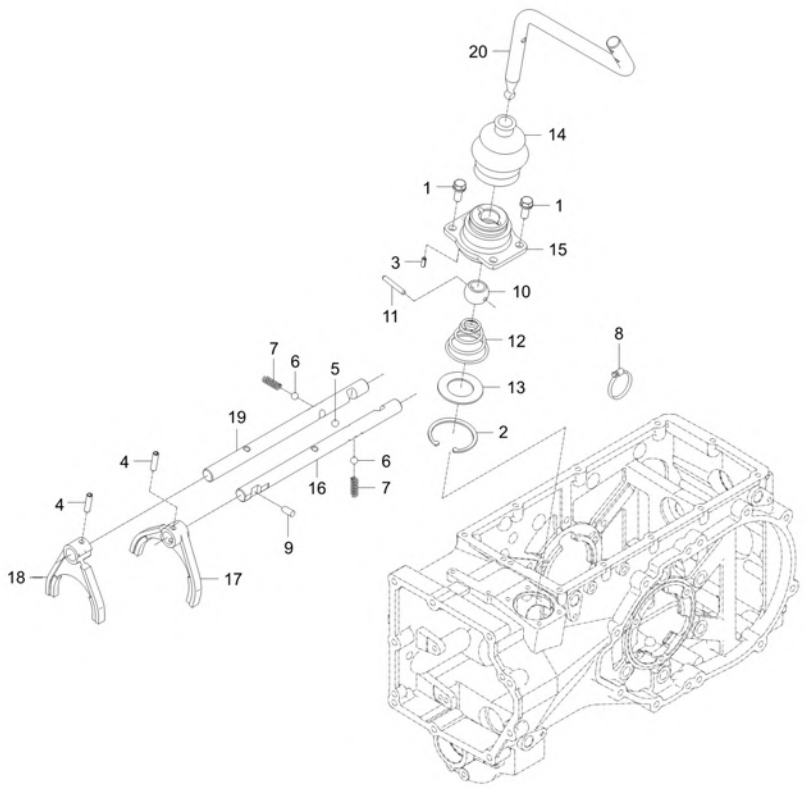

A : CK2610

No.	Part Number	Description	Qty A	Qty B	Qty C	Qty D	Qty E	I.C	Remark
15	T5715-23152	COVER, RANGE SHIFT	1						
16	T5810-21362	ROD, FORK	1						
17	T5815-21242	FORK, MAIN SPEED CHANGE	1						
18	T5815-21251	FORK, MAIN SPEED CHANGE	1						
19	T5815-21372	ROD, FORK	1						
20	T5815-23161	LEVER, MAIN SHIFT dnr v	1						
20	T5815-23162	LEVER, MAIN SHIFT	1					<------	

----> Old replace New
<---- New replace Old
<-X-> Not interchangeable
<---> Interchangeable
<-O-> Interchangeable with another part(s)
* Please place an order assy(*)

https://tractormanualz.com/

TC2-G272001

RANGE SHIFT FORK GROUP

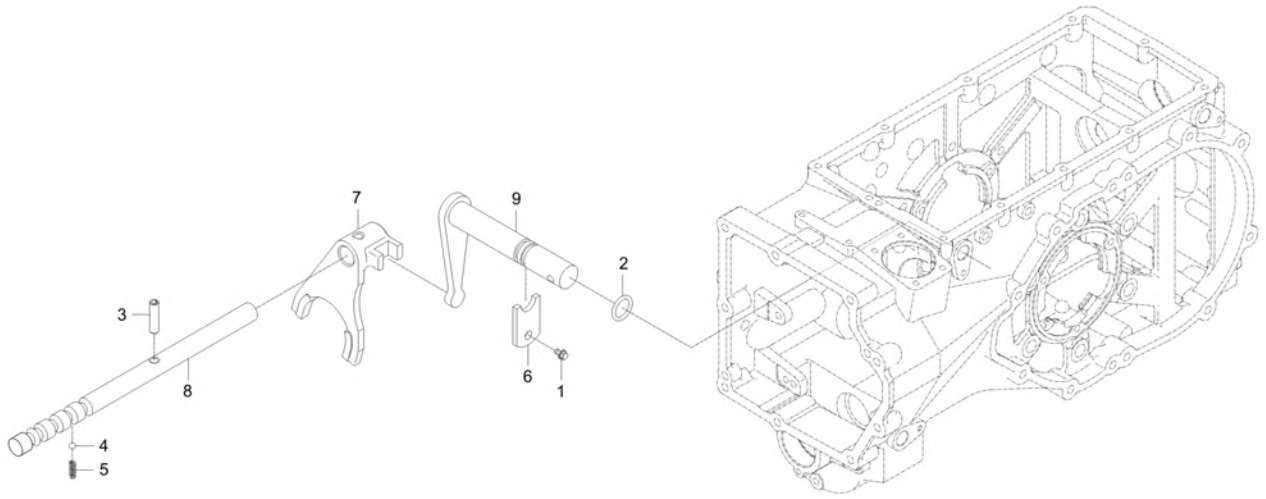

A : CK2610

No.	Part Number	Description	Qty A	Qty B	Qty C	Qty D	Qty E	I.C	Remark
1	01754-50812	BOLT, FLANGE	1						M8XP1.25
2	04811-00140	O RING	1						
3	05411-00625	PIN, SPRING v	1						DIA6.4XL25
4	07715-01605	BALL,STEEL	1						DIA7.9375
5	62331-1853-2	SPRING	1						DIA1.4
6	T2555-23331	STOPPER	1						
7	T5815-23114	FORK, SHIFT (RANGE)	1						
7	T5815-23115	FORK, SHIFT(RANGE)	1					<----->	
8	T5815-23123	ROD, FORK RANGE	1						
9	T5815-23262	ARM,SHIFT RANGE	1						

----> Old replace New
<---- New replace Old
<-X-> Not interchangeable
<---> Interchangeable
<-O-> Interchangeable with another part(s)
* Please place an order assy(*)

https://tractormanualz.com/

TC2-G282001

REAR DIFFERENTIAL GROUP

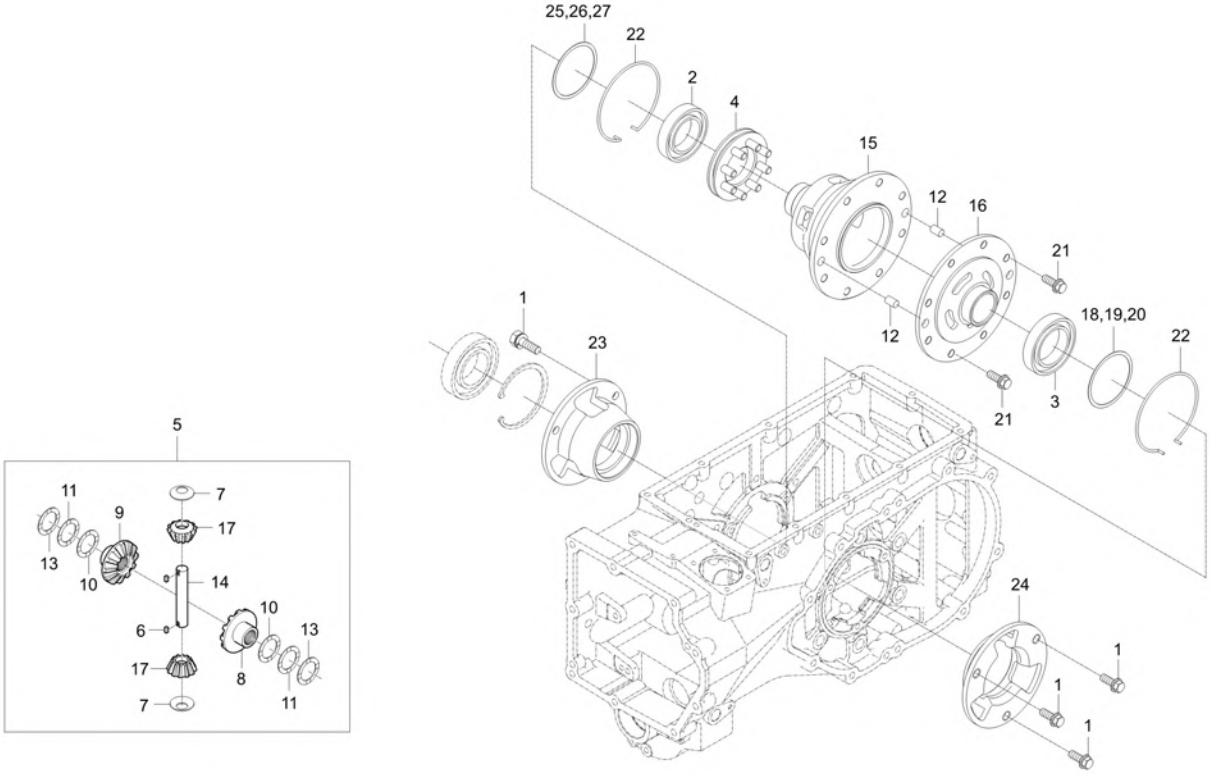

A : CK2610

No.	Part Number	Description	Qty A	Qty B	Qty C	Qty D	Qty E	I.C	Remark
1	01133-51025	BOLT	6						M10XP1.25
2	08101-06009	BEARING,BALL	1						#6009
3	08101-06010	BEARING,BALL	1						#6010
4	37300-2661-4	DIFF LOCK SHIFTER	1						
5	T2195-26102	ASSY DIFFERENTIAL	1						
5	T2195-26103		1					<--O-->	
6	31220-2628-1	KEY	2						
7	31220-2639-2	WASHER, DIFF PINION	2						
8	37300-2643-2	GEAR, DIFF RH	1						
9	37300-2644-2	DIFF GEAR LH	1						
10	37300-2648-1	WASHER 1, DIFF	2						
11	37300-2649-1	WASHER 2, DIFF	2						
12	37300-2817-2	PIN, PARALLEL	2						
13	38240-2647-2	WASHER, DIFF.3	2						
14	T2185-26342	SHAFT 1, DIFFERENTIAL PINION	1						
15	T2195-26511	CASE,DIFFRENTIAL dnr v	1						
15	T2185-26511	CASE,DIFFRENTIAL	1					<--O-->	
16	T2195-26521	CAP, DIFFERENTIAL CASE v	1						

----> Old replace New <---- New replace Old <-X-> Not interchangeable
<---> Interchangeable <-O-> Interchangeable with another part(s)
* Please place an order assy(*)

https://tractormanualz.com/

TC2-G282001

REAR DIFFERENTIAL GROUP

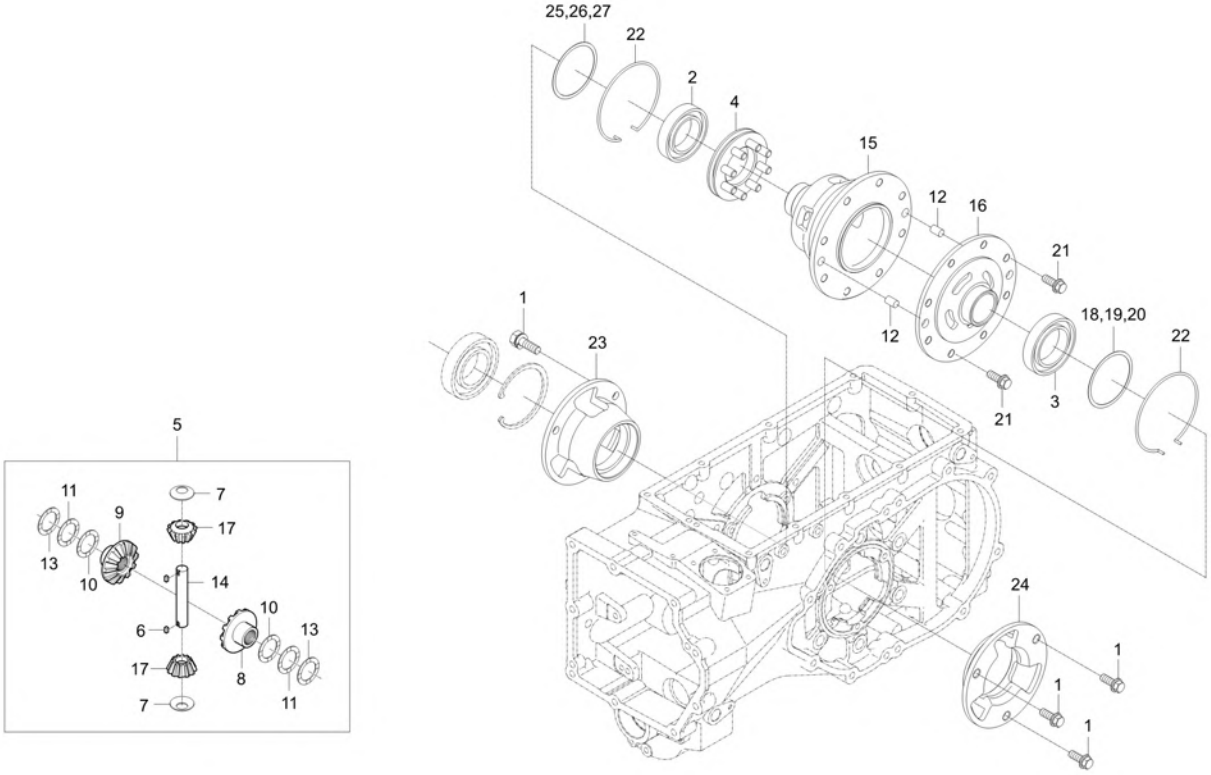

A : CK2610

No.	Part Number	Description	Qty A	Qty B	Qty C	Qty D	Qty E	I.C	Remark
16	T2185-26521	CAP, DIFFERENTIAL CASE v	1					<--O-->	
17	T2240-26355	PINION, DIFF	2						
18	T2305-26061	SHIM, 0.1 dnr v	1						T0.1
19	T2305-26071	SHIM, 0.2 dnr v	1						T0.2
20	T2305-26081	SHIM, 0.4	1						T0.4
21	T4115-43871	BOLT dnr v	8						
21	37800-4387-1	BOLT	8					<--O-->	M10xP1.25
22	T5715-26591	HOLDING, SPRING	2						
23	T5815-26551	ROTOR SUPPORT	1						
24	T5815-26561	CASE,DIFFRENTIAL BRG	1						
25	U3215-14601	SHIM, 0.1	1						
26	U3215-14611	SHIM 0.2	1						
27	U3215-14621	SHIM, 0.4	1						
28	01133-51025	BOLT	8						M10XP1.25

----> Old replace New <---- New replace Old <-X-> Not interchangeable
<---> Interchangeable <-O-> Interchangeable with another part(s)
* Please place an order assy(*)

https://tractormanualz.com/

TC2-G283003

REAR DIFF LOCK GROUP

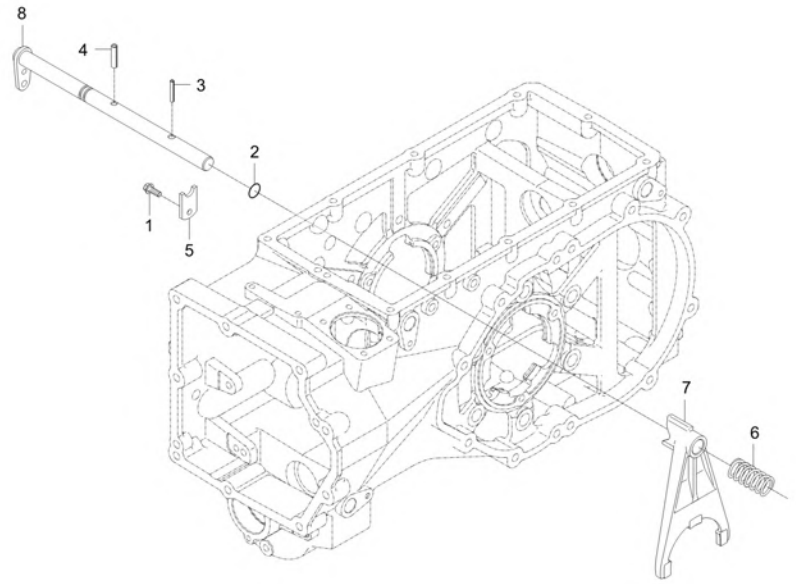

A : CK2610

No.	Part Number	Description	Qty A	Qty B	Qty C	Qty D	Qty E	I.C	Remark
1	01754-50812	BOLT, FLANGE	1						M8XP1.25
2	04811-00140	O RING	1						
2	04811-00140	O RING	2					<------	
3	05411-00540	PIN,SPRING	1						
4	05411-00840	PIN, SPRING	1						DIA8.6XL40
5	T2555-23331	STOPPER	1						
6	T2555-26641	FRICTION SPRING	1						
7	T5715-26631	FORK,SHAFT	1						
8	T5815-26682	CAM,DIFFRENTIAL LOCK	1						

----> Old replace New
<---- New replace Old
<-X-> Not interchangeable
<---> Interchangeable
<-O-> Interchangeable with another part(s)
* Please place an order assy(*)

https://tractormanualz.com/

TC2-G293001

BRAKE GROUP

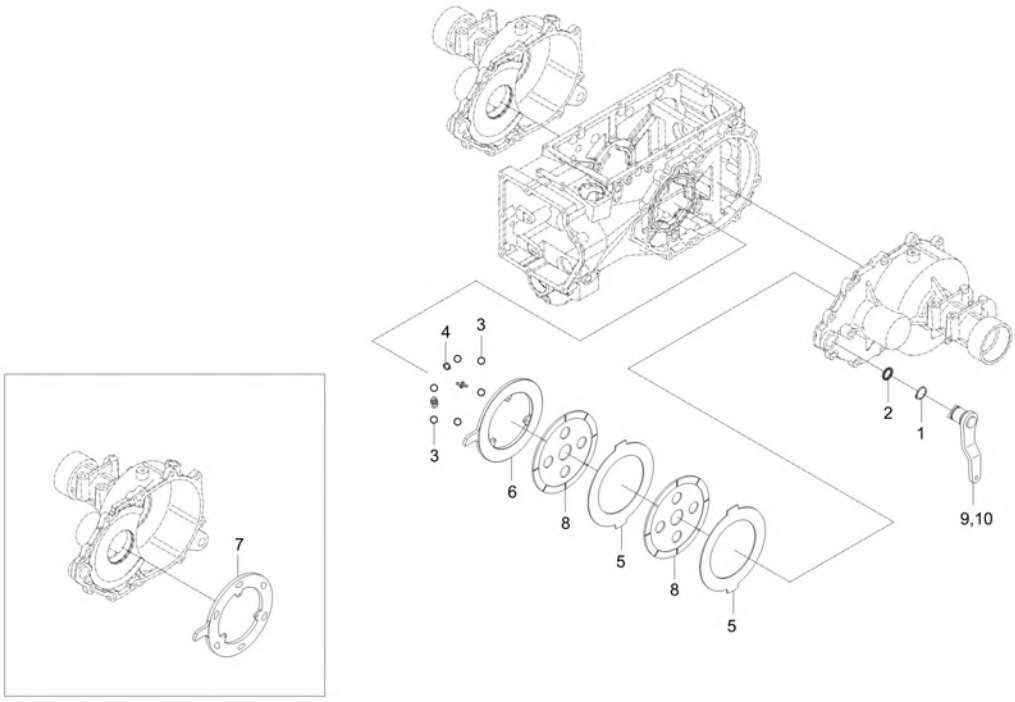

A : CK2610

No.	Part Number	Description	Qty A	Qty B	Qty C	Qty D	Qty E	I.C	Remark
1	04612-00300	SNAP RING	2						DIA30
2	04811-00240	O RING	2						P24
3	07715-00805	BALL,STEEL obs v	12						DIA15.875
4	T2555-28461	FRICTION SPRING	6						
5	T5715-28222	PLATE, BRAKE	4						
6	T5715-28243	PLATE,CAM LH	1						
7	T5715-28253	PLATE,CAM RH	1						
8	T5755-28211	BREAK DISC	4						
9	T5815-28271	LEVER,BRAKE CAM LH	1						
10	T5815-28281	LEVER,BRAKE CAM RH	1						

----> Old replace New
<---- New replace Old
<-X-> Not interchangeable
<---> Interchangeable
<-O-> Interchangeable with another part(s)
* Please place an order assy(*)

https://tractormanualz.com/

TC2-G2A1001

REAR AXLE GROUP

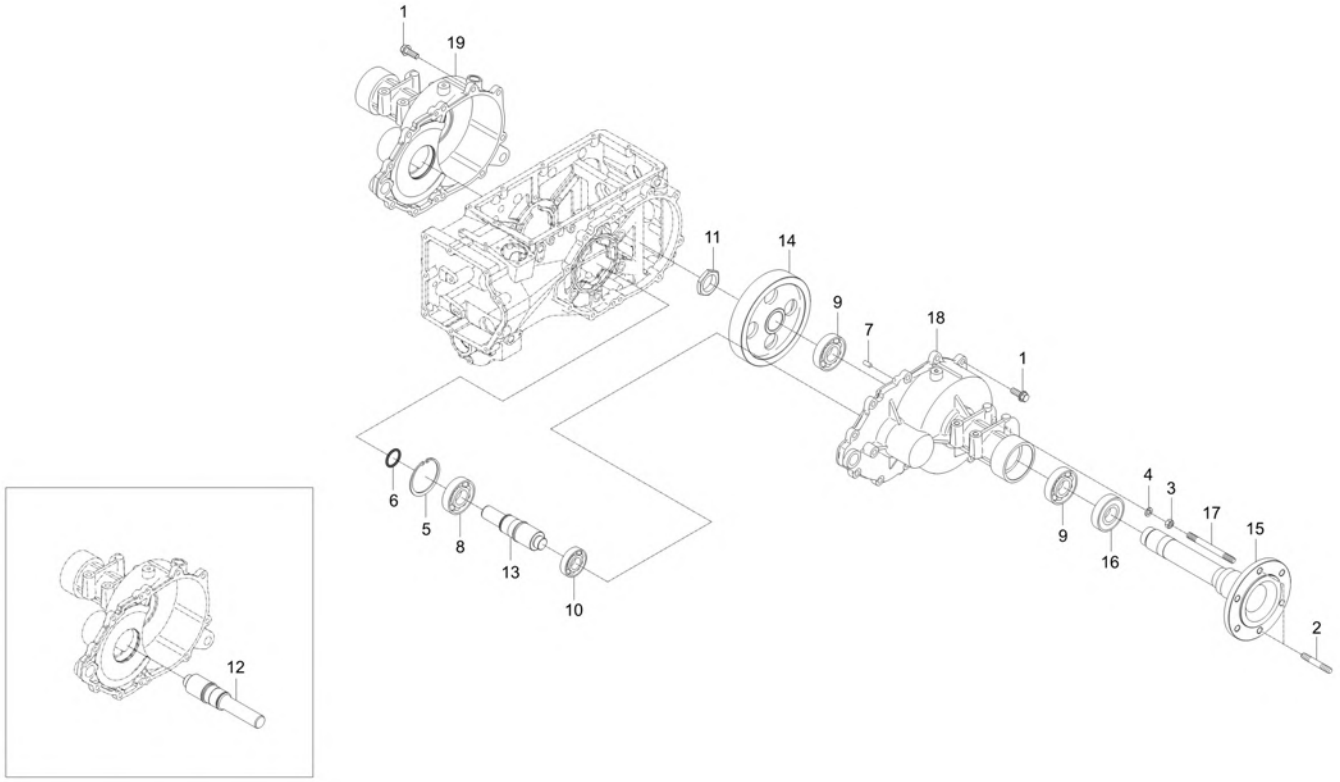

A : CK2610

No.	Part Number	Description	Qty A	Qty B	Qty C	Qty D	Qty E	I.C	Remark
1	01177-51235	BOLT v	16						M12XP1.25
2	01517-51632	STUD v	4						M16*1.5*32
3	02176-50120	NUT	4						M12XP1.25
4	04512-50120	SPRING WASHER	4						M12
5	04611-00850	RING,SNAP	2						
6	04811-00390	O RING	2						
7	05012-01018	PIN, STRAIGHT	4						DIA10XL18
8	08101-06209	BEARING, BALL v	2						#6209
9	08101-06210	BEARING, BALL	4						#6210
10	08101-06306	BEARING, BALL	2						DIA30
11	T2185-27202	NUT, REAR AXLE v	2						
12	T5815-26711	SHAFT, GEAR 9 in length v	1						
13	T5815-26721	SHAFT, GEAR 7 in length v	1						
14	T5815-26831	GEAR, 56	2						
14	T5815-26832	GEAR, 56	2					<----->	
15	T5815-27112	WHEEL SHAFT	2						
15	T5815-27113	WHEEL SHAFT	2					<----->	
16	T5815-27131	OIL SEAL	2						

----> Old replace New
<---- New replace Old
<-X-> Not interchangeable
<---> Interchangeable
<-O-> Interchangeable with another part(s)
* Please place an order assy(*)

https://tractormanualz.com/

TC2-G2A1001

REAR AXLE GROUP

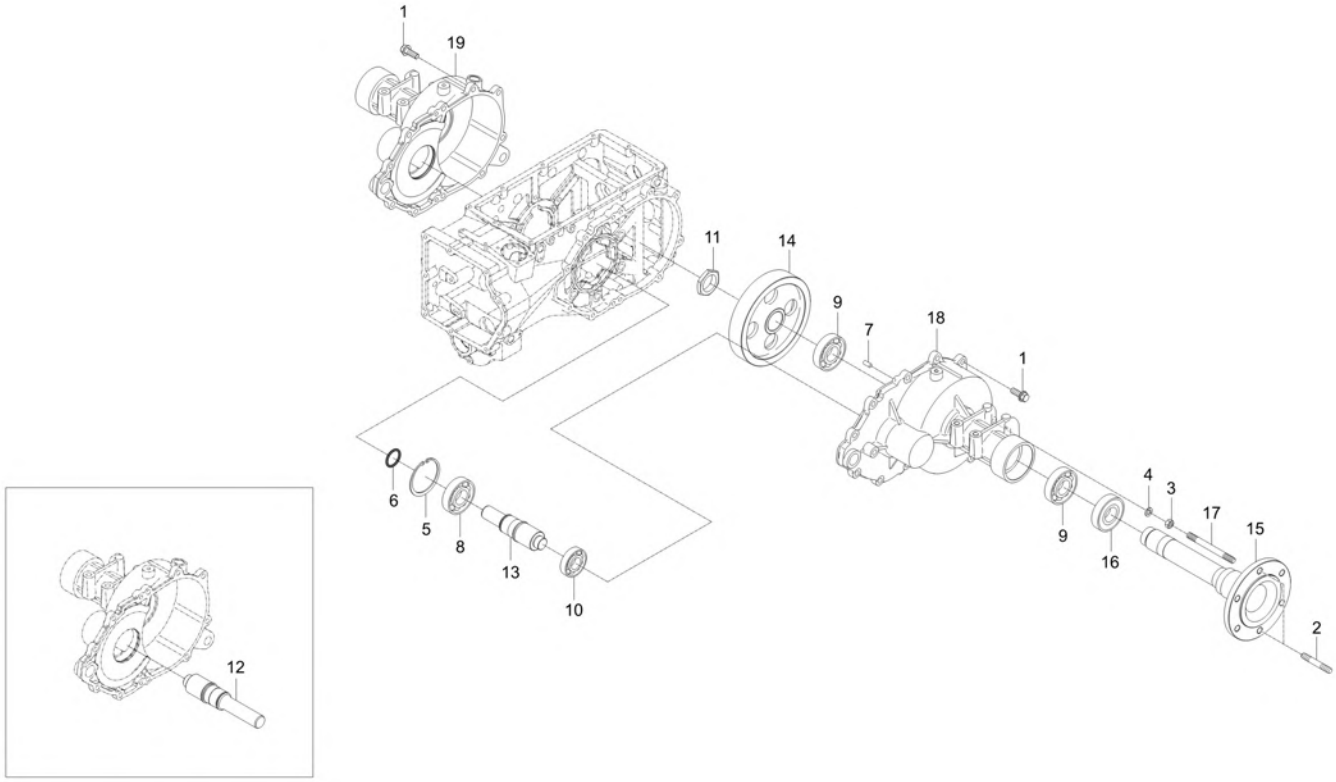

A : CK2610

No.	Part Number	Description	Qty A	Qty B	Qty C	Qty D	Qty E	I.C	Remark
17	T5815-27361	BOLT, STUD	4						M12*1.25
18	T5815-28132	CASE, REAR AXLE LH dnr v	1						
18	T5815-28133	CASE,REAR AXLE LH dnr v	1					<------	
18	T5815-28134	CASE,REAR AXLE LH v	1					<----->	
19	T5815-28142	CASE, REAR AXLE RH dnr v	1						
19	T5815-28143	CASE,REAR AXLE RH v	1					<------	
19	T5815-28144	CASE,REAR AXLE RH v	1					<----->	

----> Old replace New
<---- New replace Old
<-X-> Not interchangeable
<---> Interchangeable
<-O-> Interchangeable with another part(s)
* Please place an order assy(*)

https://tractormanualz.com/

TC2-G2B2001

FRONT WHEEL DRIVE FORK GROUP

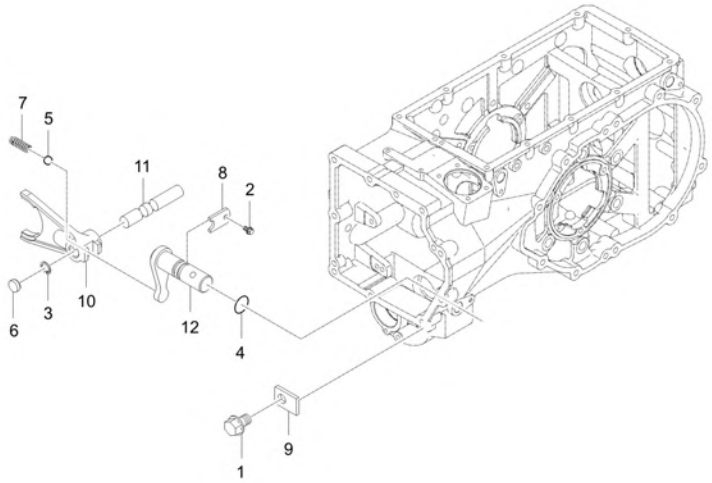

A : CK2610

No.	Part Number	Description	Qty A	Qty B	Qty C	Qty D	Qty E	I.C	Remark
1	01754-50812	BOLT, FLANGE	1						M8XP1.25
2	01754-50812	BOLT, FLANGE	1						M8XP1.25
3	04611-00120	SNAP RING	1						
4	04811-00140	O RING	1						
5	07715-01605	BALL,STEEL	1						DIA7.9375
6	37220-2125-1	USE 37220-21251	1						
7	62331-1853-2	SPRING	1						DIA1.4
8	T2350-23132	STOPPER	1						T3.2
9	T2555-23331	STOPPER	1						
10	T5815-44112	FORK, SHIFT(4WD)	1						
11	T5815-44211	ROD, FORK	1						
12	T5815-44312	ARM,FRONT DRIVE	1						

----> Old replace New
<---- New replace Old
<-X-> Not interchangeable
<---> Interchangeable
<-O-> Interchangeable with another part(s)
* Please place an order assy(*)

https://tractormanualz.com/

TC2-G2C4006

PTO SHAFT GROUP

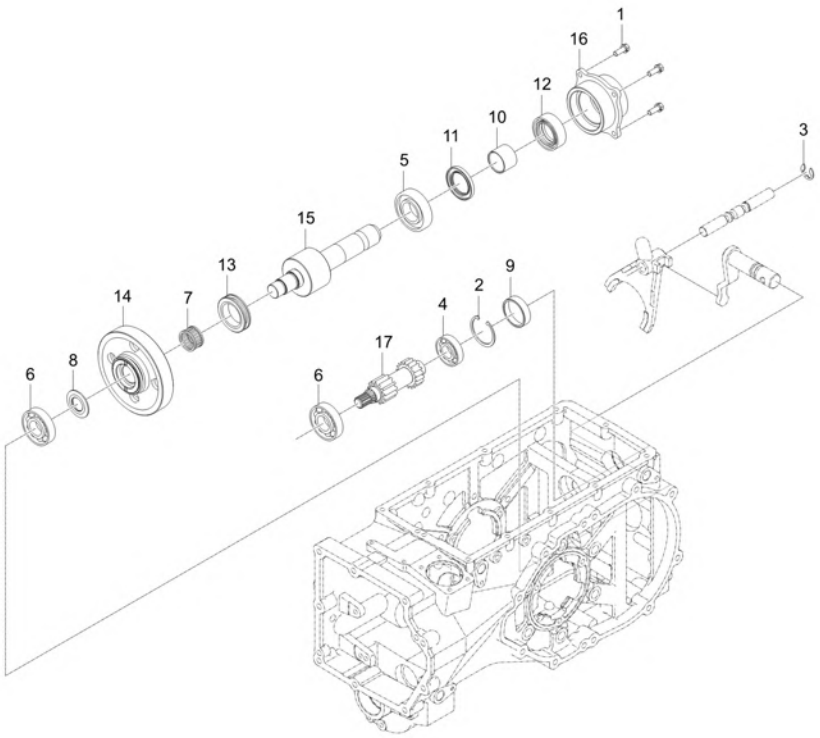

A : CK2610

No.	Part Number	Description	Qty A	Qty B	Qty C	Qty D	Qty E	I.C	Remark
1	01123-50822	WASHER BOLT	4						M8XP1.25
2	04611-00520	SNAP RING	1						DIA52
3	04613-50120	SNAP RING	1						
4	08101-06205	BEARING BALL dnr v	1						DIA25
5	08101-06207	BEARING BALL	1						DIA35
6	08101-06305	BEARING,BALL v	2						DIA25
7	08822-83326	BEARING, NEEDLE	1						내경DIA28
8	T2305-21762	COLLAR, THRUST v	1						T3.2
9	T2350-25421	SEAL CAP 52	1						
10	T4620-25383	SLEEVE	1						
11	T4620-25442	SEAL, OIL	1						
12	T4620-25452	SEAL, OIL	1 RL9400001 ~ SL9400542						
12	T2555-29111	OIL SEAL	1 TL9400001 ~ WL9400080					<--O-->	
13	T5815-21751	SHIFTER dnr v	1						
13	T5815-21752	SHIFTER v	1					<----->	
13	T2185-21981	SHIFTER	1					<------	
14	T5815-25121	GEAR 58	1						
14	T5815-25122	GEAR 58 v	1					<----->	

----> Old replace New
<---- New replace Old
<-X-> Not interchangeable
<---> Interchangeable
<-O-> Interchangeable with another part(s)
* Please place an order assy(*)

https://tractormanualz.com/

TC2-G2C4006

PTO SHAFT GROUP

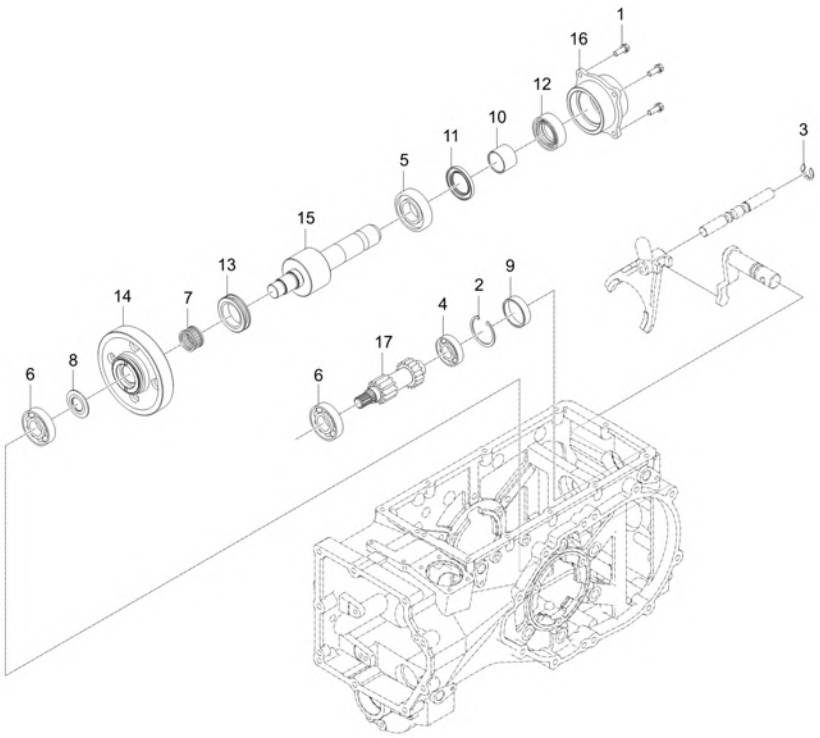

A : CK2610

No.	Part Number	Description	Qty A	Qty B	Qty C	Qty D	Qty E	I.C	Remark
14	T5815-25123	GEAR 58	1					<------	
15	T5815-25311	SHAFT,PTO OUTPUT	1						
15	T5815-25312	SHAFT,PTO OUTPUT	1					<----->	
15	T5815-25313	SHAFT, PTO OUTPUT	1					<------	
16	T5815-25411	CASE, BEARING PTO	1						
16	T5815-25412	CASE, BEARING (PTO)	1					<--O-->	
17	TC22-0019A	SHAFT, GEAR 14	1						

----> Old replace New
<----> Interchangeable
* Please place an order assy(*)
<---- New replace Old
<-O-> Interchangeable with another part(s)
<-X-> Not interchangeable

https://tractormanualz.com/

TC2-G2C5001

PTO SHIFT FORK GROUP

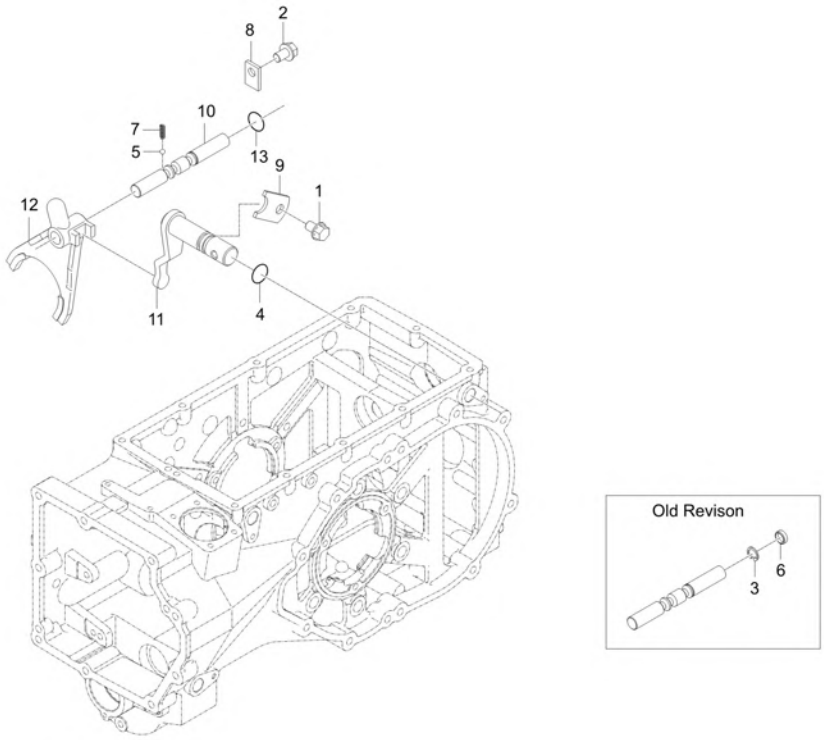

A : CK2610

No.	Part Number	Description	Qty A	Qty B	Qty C	Qty D	Qty E	I.C	Remark
1	01754-50812	BOLT, FLANGE	1						M8XP1.25
2	01754-50812	BOLT, FLANGE	1						M8XP1.25
3	04611-00120	SNAP RING	1						
4	04811-00140	O RING	1						
5	07715-01605	BALL,STEEL	1						DIA7.9375
6	37220-2125-1	USE 37220-21251	1						
7	62331-1853-2	SPRING	1						DIA1.4
8	T2350-23132	STOPPER	1						T3.2
9	T2555-23331	STOPPER	1						
10	T5815-24651	ROD,FORK	1						
10	T5815-24652	ROD, FORK	1					<------	
11	T5815-25461	ARM, SHIFT PTO	1						
12	T5815-25811	FORK, SHIFT PTO	1						
12	T5815-25812	FORK, SHIFT(PTO)	1					<------	
13	04811-10100	O RING	1						

----> Old replace New
<---- New replace Old
<-X-> Not interchangeable
<---> Interchangeable
<-O-> Interchangeable with another part(s)
* Please place an order assy(*)

https://tractormanualz.com/

TC2-G2G1003

REAR WHEEL GROUP

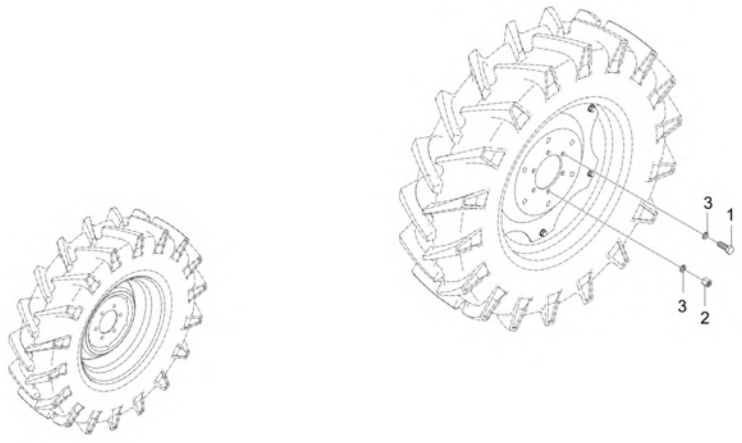

A : CK2610

No.	Part Number	Description	Qty A	Qty B	Qty C	Qty D	Qty E	I.C	Remark
1	01073-51630	BOLT v	8						M16XP1.5
2	02076-50160	NUT	4						
3	04512-50160	WASHER, SPRING	12						M16

----> Old replace New
<----> Interchangeable
* Please place an order assy(*)
<---- New replace Old
<-O-> Interchangeable with another part(s)
<-X-> Not interchangeable

https://tractormanualz.com/

TC2-G2C1001

PTO INPUT SHAFT GROUP

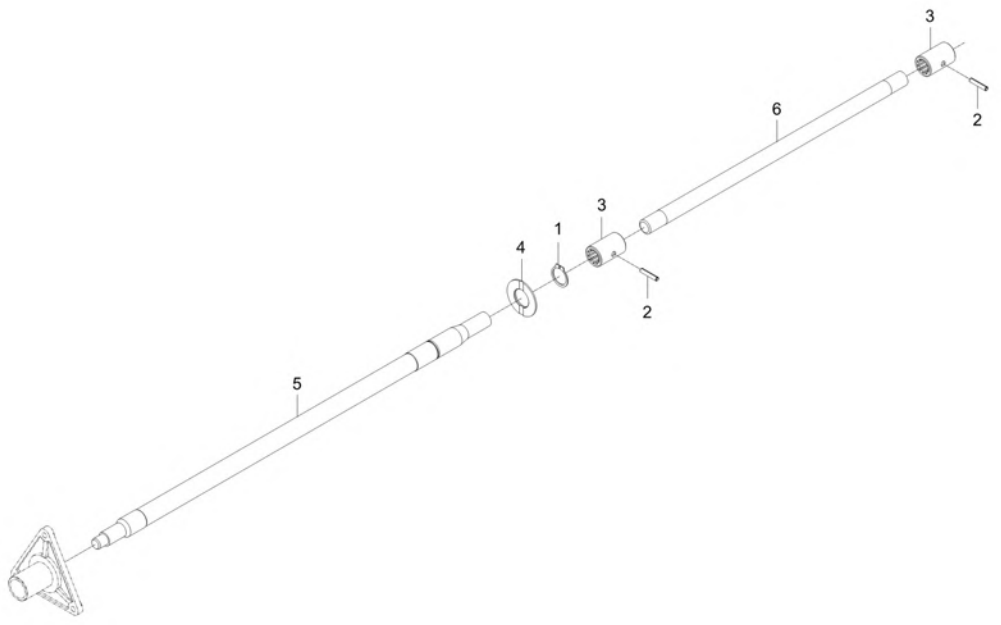

A : CK2610

No.	Part Number	Description	Qty A	Qty B	Qty C	Qty D	Qty E	I.C	Remark
1	04612-00250	CIR-CLIP	1						DIA25
2	05411-00528	PIN,SPRING	2						
3	T2195-25241	COUPLING	2						
4	T2305-21762	COLLAR, THRUST v	1						T3.2
5	T5815-25213	SHAFT, PTO DRIVE	1						
6	T5815-25271	SHAFT 1,PTO DRIVE	1						

----> Old replace New
<----> Interchangeable
* Please place an order assy(*)
<---- New replace Old
<-O-> Interchangeable with another part(s)
<-X-> Not interchangeable

https://tractormanualz.com/

TC2-G2B1006

FRONT WHEEL DRIVE SHAFT GROUP

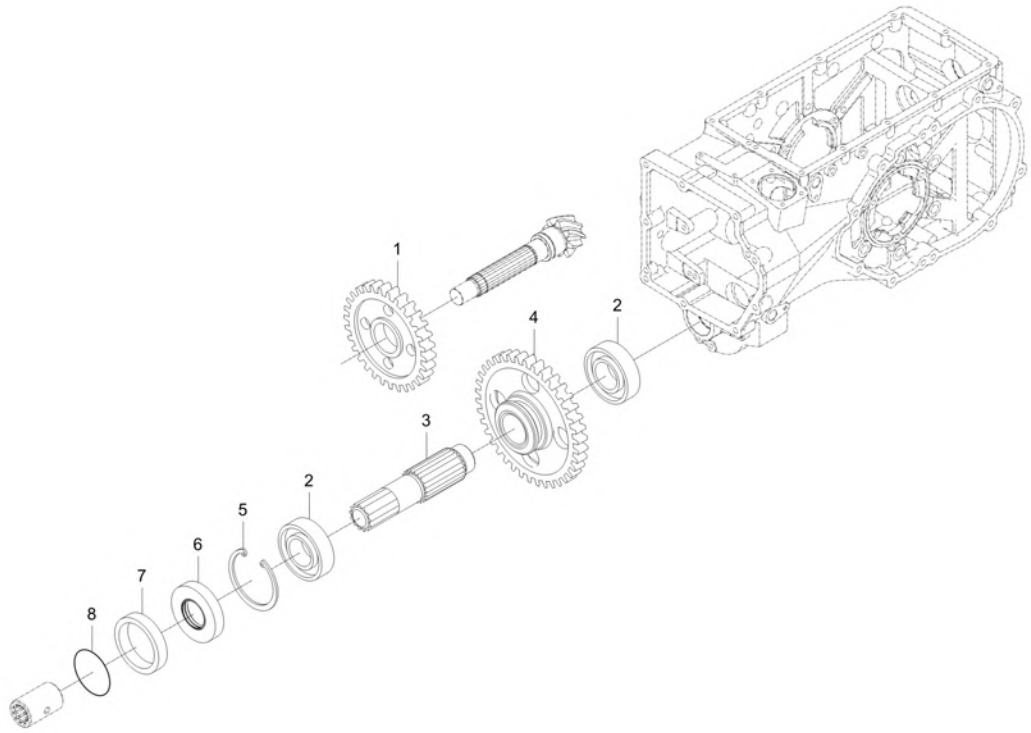

A : CK2610

No.	Part Number	Description	Qty A	Qty B	Qty C	Qty D	Qty E	I.C	Remark
1	TC22-0015A	GEAR-27	1						
2	08101-06205	BEARING BALL dnr v	2						DIA25
3	T5815-44562	SHAFT, FRONT WHEEL DRIVE	1						
4	TC22-0016A	GEAR-40	1						
5	04611-00520	SNAP RING	1						DIA52
6	09502-55210	SEAL OIL v	1						DIA25
7	T5815-44691	SLEEVE	1						
8	04811-06420	O RING	1						DIA42.2

----> Old replace New <---- New replace Old <-X-> Not interchangeable
<---> Interchangeable <-O-> Interchangeable with another part(s)
* Please place an order assy(*)

https://tractormanualz.com/

TC2-G271003

RANGE SHAFT GROUP

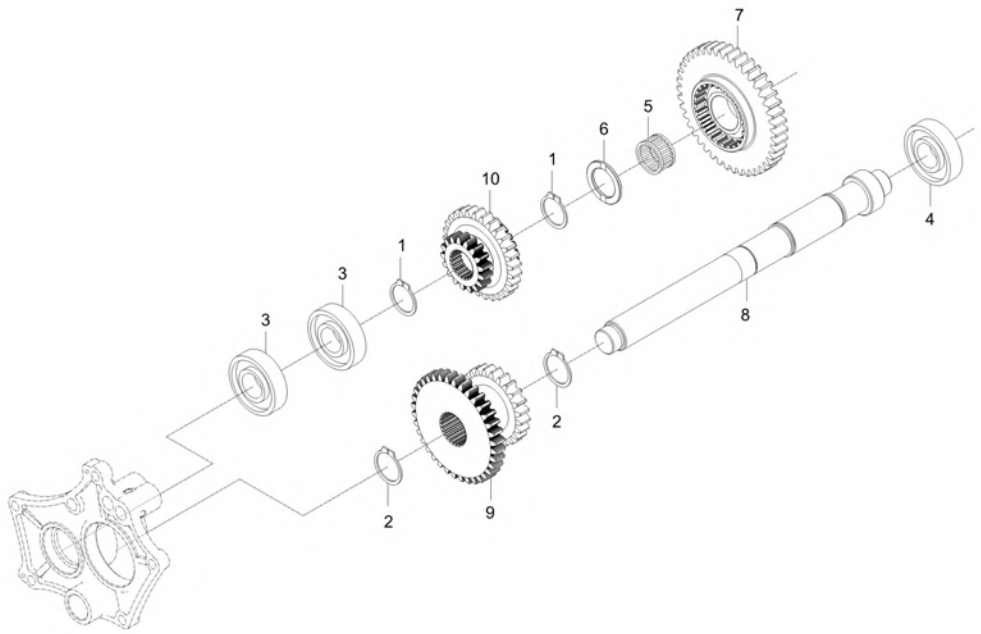

A : CK2610

No.	Part Number	Description	Qty A	Qty B	Qty C	Qty D	Qty E	I.C	Remark
1	04612-00300	SNAP RING	2						DIA30
2	04612-00320	RING SNAP	2						
3	08101-06305	BEARING,BALL v	2						DIA25
4	08101-06305	BEARING,BALL v	1						DIA25
5	08823-03520	BEARING,NEEDLE	1						KT303520
6	T4810-22581	COLLAR, THRUST	1						
7	T5815-23531	GEAR,42	1						
8	T5815-23712	SHAFT, GEAR	1						
9	TC22-0012A	SHAFT GEAR 22-34	1						
10	TC22-0013A	SHAFT, GEAR 19-31	1						

----> Old replace New
<---- New replace Old
<-X-> Not interchangeable
<---> Interchangeable
<-O-> Interchangeable with another part(s)
* Please place an order assy(*)

https://tractormanualz.com/

TC2-G281003 SPIRAL BEVEL PINION SHAFT GROUP

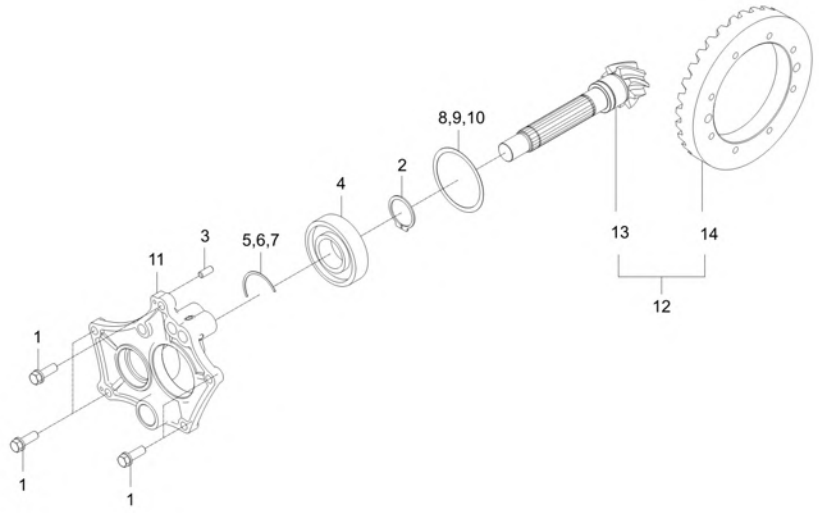

A : CK2610

No.	Part Number	Description	Qty A	Qty B	Qty C	Qty D	Qty E	I.C	Remark
1	01133-51030	WITH WASHER BOLT	5						M10XP1.25
2	04612-00400	CIR CLIP, EXTERNAL	1						
3	05012-00818	PIN, PARALLEL	2						DIA8XL18
4	08101-06308	BALL BEARING	1						DIA40
5	K5400-14572	SHIM obs v	1						T0.1
6	K5400-14581	SHIM	1						T0.2
7	K5400-14591	SHIM	1						T0.5
8	T4520-44081	SHIM 0.1 v	1						T0.1
9	T4520-44091	SHIM 0.2	1						T0.2
10	T4520-44101	SHIM 0.4 dnr v	1						T0.4
11	T5855-21121	COVER, BEARING	1						
11	T5815-21122	COVER, BEARING	1					<----->	
12	TC22-0022A	SPIRAL BEVEL GEAR ASSY	1						
13	TC22-0010A	PINION, BEVEL SPIRAL	1						
14	TC22-0011A	GEAR, BEVEL SPIRAL	1						

----> Old replace New
<---- New replace Old
<-X-> Not interchangeable
<---> Interchangeable
<-O-> Interchangeable with another part(s)
* Please place an order assy(*)

https://tractormanualz.com/

TC2-G311003

FRONT AXLE SUPPORT GROUP

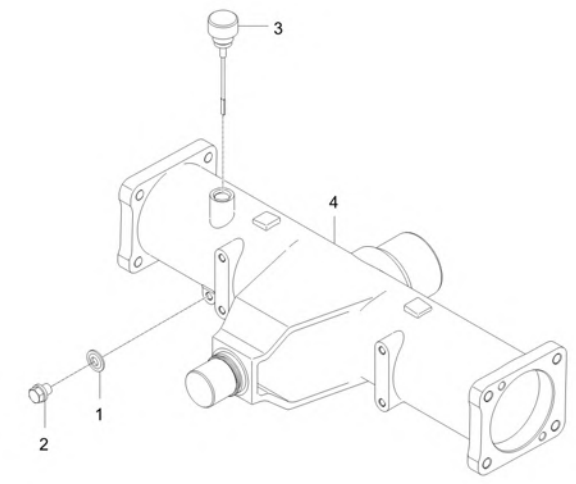

A : CK2610

No.	Part Number	Description	Qty A	Qty B	Qty C	Qty D	Qty E	I.C	Remark
1	04717-01000	WASHER, SEAL	1						M10
2	06331-45010	PLUG v	1						M10XP1.25
3	T5210-42101	GAUGE, OIL - DIPSTICK dnr v	1 ~ VL9400344						
3	T5210-42102	OIL GAUGE v	1 VL9400345 ~ WL9400080					<----->	
4	T5815-42143	SUPPORT, FRONT AXLE RR	1						
4	T5815-42144	TRK SUPPORT, FRONT AXLE RR	1					<----->	
4	T5815-42145	SUPPORT, FRONT AXLE RR	1					<----->	

----> Old replace New
<---- New replace Old
<-X-> Not interchangeable
<---> Interchangeable
<-O-> Interchangeable with another part(s)
* Please place an order assy(*)

https://tractormanualz.com/

TC2-G312001

FRONT DIFF SYSTEM GROUP

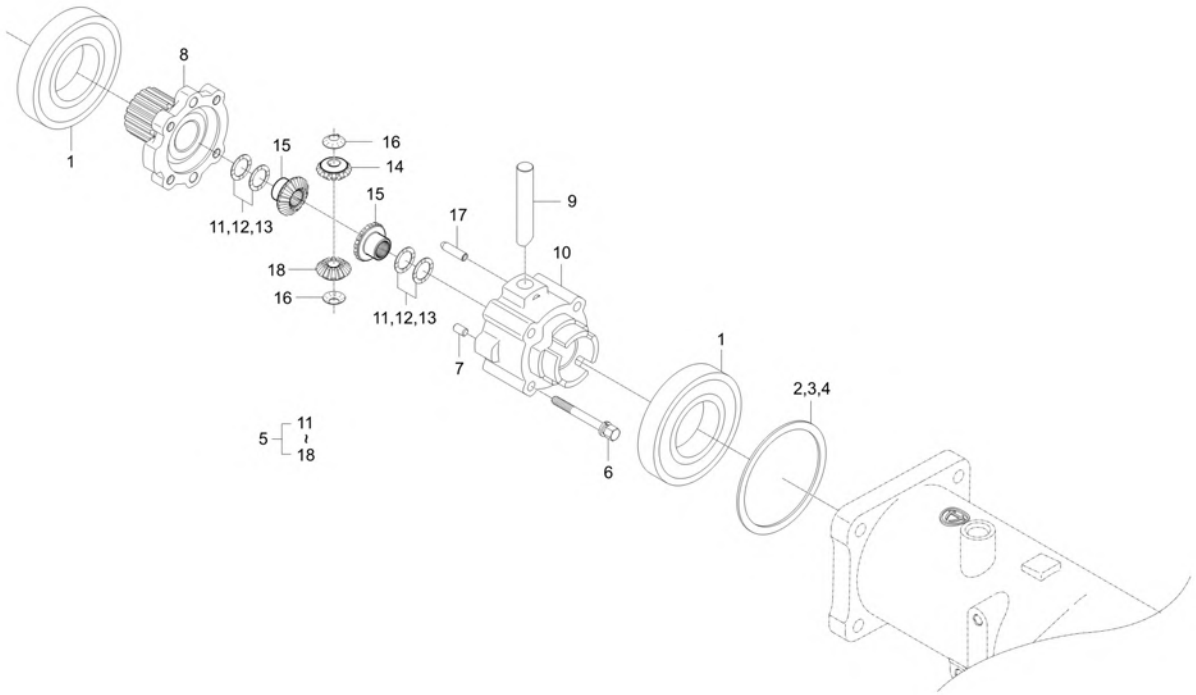

A : CK2610

No.	Part Number	Description	Qty A	Qty B	Qty C	Qty D	Qty E	I.C	Remark
1	08101-06212	BEARING, BALL	2						DIA60
2	T2630-43011	SHIM 0.8	1						T0.8
3	T2630-43021	SHIM 1.0 v	1						T1.0
4	T2630-43031	SHIM 1.2	1						T1.2
5	T2630-43102	ASSY DIFF FRONT dnr v	1						
6	01133-51075	BOLT, WASHER	4						M10XP1.25
7	05012-01018	PIN, STRAIGHT	2						DIA10XL18
8	T2630-42321	COVER, DIFF. CASE v	1						
9	T2630-43111	SHAFT, DIFF. PINION	1						
10	T2630-43121	CASE, FRONT DIFF	1						
11	T4520-43071	SHIM, 0.8	2						T0.8
12	T4520-43081	SHIM, 0.1	2						T1.0
13	T4520-43091	SHIM, 1.2	2						T1.2
14	T4520-43131	PINION, DIFFERENTIAL dnr v	2						
15	T4520-43141	GEAR, DIFF SIDE v	2						
16	T4520-43151	WASHER, DIFF PINION	2						
17	T4520-43171	PIN, PARALLEL	1						
18	T4682-43132	PINION, DIFFERENTIAL	2						

----> Old replace New
<----> Interchangeable
* Please place an order assy(*)
<---- New replace Old
<-O-> Interchangeable with another part(s)
<-X-> Not interchangeable

https://tractormanualz.com/

TC2-G313001

BEVEL PINION SHAFT GROUP

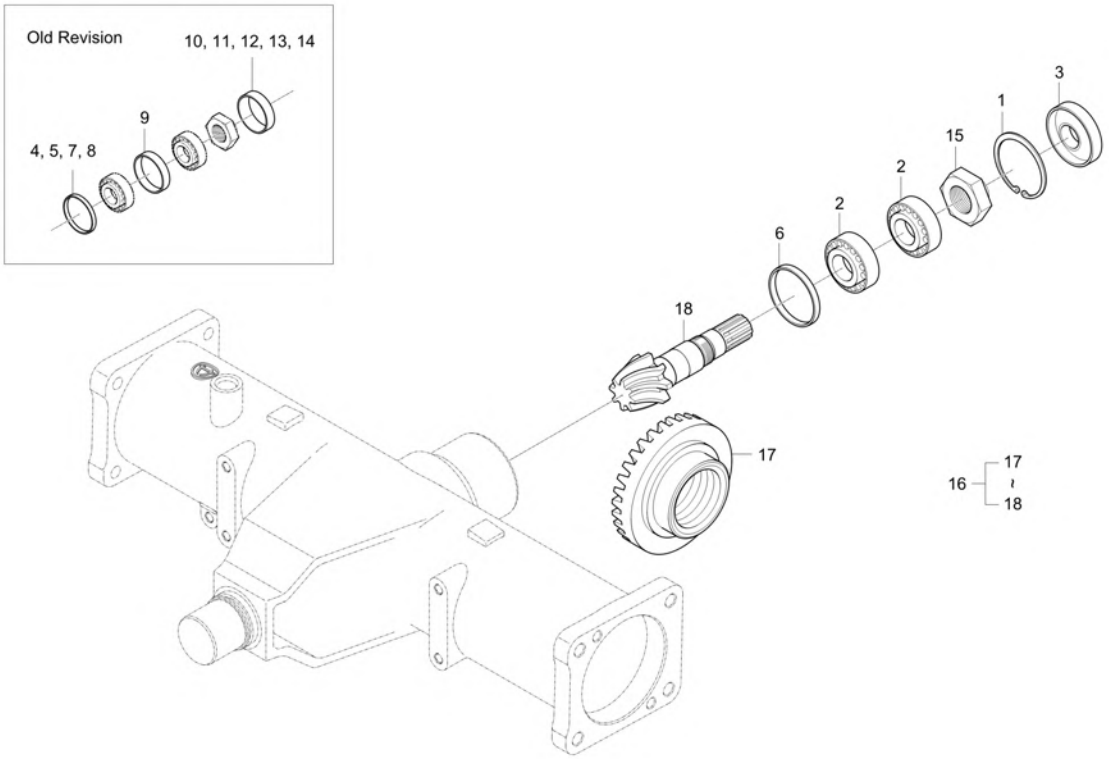

A : CK2610

No.	Part Number	Description	Qty A	Qty B	Qty C	Qty D	Qty E	I.C	Remark
1	04611-00720	RING,SNAP	1						DIA72
2	08711-30306	BEARING,TAPER ROLLER	2						#30306
3	T2185-42291	SEAL,OIL	1						
4	T2185-42451	COLLAR1,ADJUST	1						DIA73*T3.0
5	T2185-42461	COLLAR1,ADJUST	1						DIA73*T3.0
6	T2185-42471	COLLAR1,ADJUST	1						DIA73*T3.0
7	T2185-42481	COLLAR1,ADJUST	1						DIA73*T3.0
8	T2185-42491	COLLAR1,ADJUST	1						DIA73*T3.0
9	T2185-42751	SPACER	1						DIA73*T3.0
10	T2185-42761	COLLAR2,ADJUST	1						DIA73*T3.0
11	T2185-42771	COLLAR2,ADJUST	1						DIA73*T3.0
12	T2185-42781	COLLAR2,ADJUST	1						DIA73*T3.0
13	T2185-42791	COLLAR2,ADJUST	1						DIA73*T3.0
14	T2185-42801	COLLAR2,ADJUST	1						DIA73*T3.0
15	T4620-21591	NUT,LOOK(28)	1						
16	T5815-43201	SPIRAL BEVEL GEAR ASSY	1						
16	T5815-43202	SPIRAL BEVEL GEAR ASSY	1 XL9400489 ~					<--O-->	
17	T5815-42211	GEAR,21 SPIRAL BEVEL v	1						

----> Old replace New
<---> Interchangeable
* Please place an order assy(*)
<---- New replace Old
<-O-> Interchangeable with another part(s)
<-X-> Not interchangeable

https://tractormanualz.com/

TC2-G313001

BEVEL PINION SHAFT GROUP

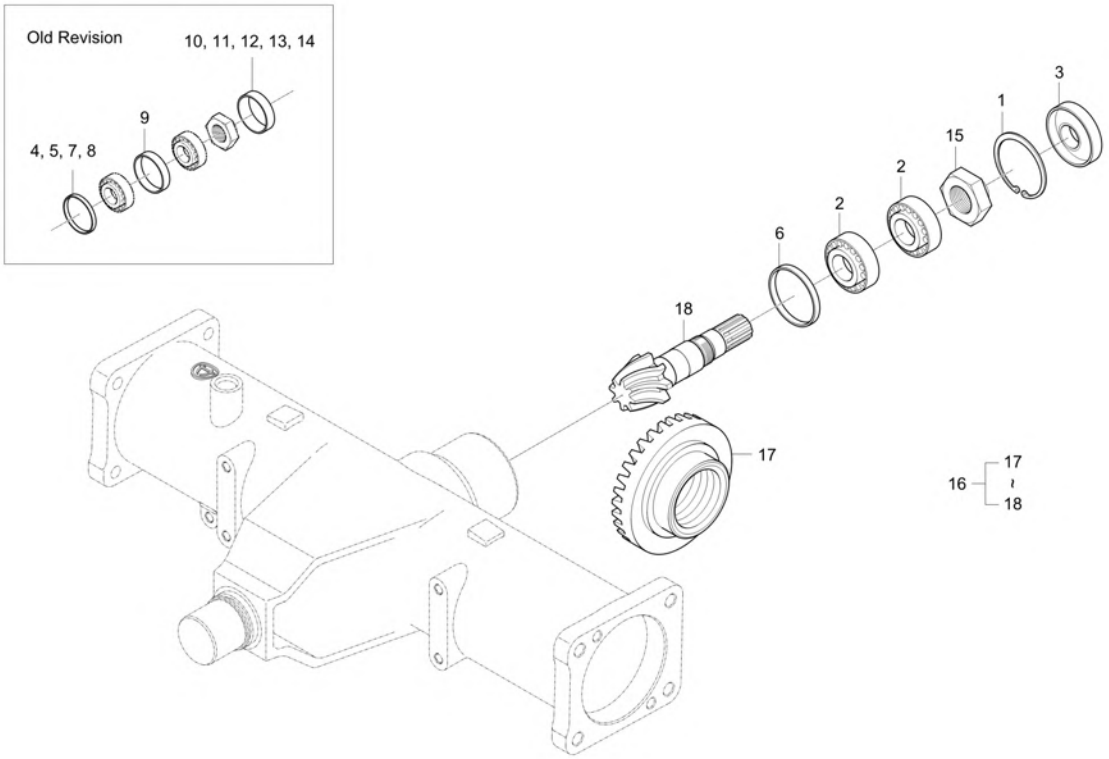

A : CK2610

No.	Part Number	Description	Qty A	Qty B	Qty C	Qty D	Qty E	I.C	Remark
17	T5815-42212	GEAR, 19 SPRIAL BEVEL v	1 XL9400489 ~					<--O-->	
18	T5815-43211	SHAFT, 9 BEVEL PINION obs v	1						
18	T5815-43212	shalf bevel pinion v	1 XL9400489 ~					<--O-->	

----> Old replace New
<---- New replace Old
<-X-> Not interchangeable
<---> Interchangeable
<-O-> Interchangeable with another part(s)
* Please place an order assy(*)

https://tractormanualz.com/

TC2-G314003

BEVEL GEAR CASE GROUP

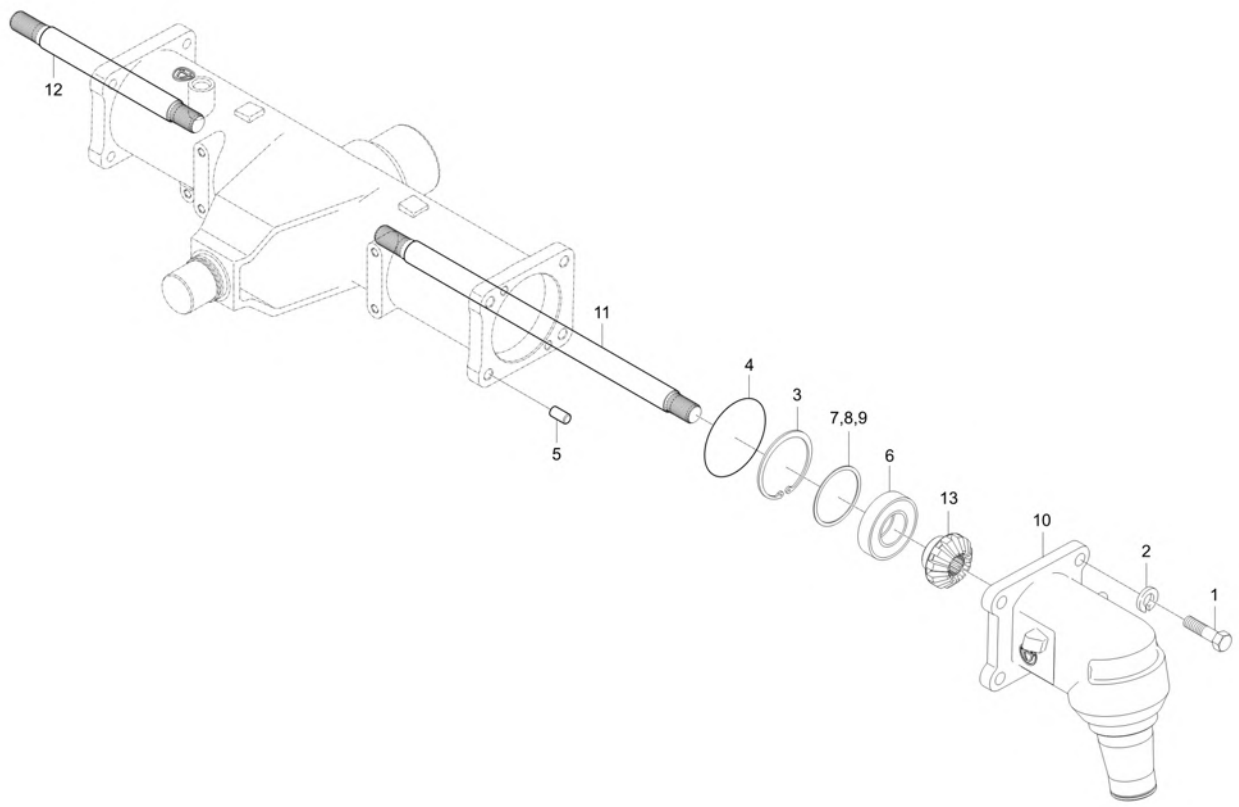

A : CK2610

No.	Part Number	Description	Qty A	Qty B	Qty C	Qty D	Qty E	I.C	Remark
1	01173-51440	Hex Head Cap Screw v	8						M14XP1.5
2	04512-50140	SPRING WASHER	8						M14
3	04611-00720	RING,SNAP	2						DIA72
4	04811-51050	O RING	2						
5	05012-01020	PIN, STRAIGHT	4						DIA10XL20
6	08101-06207	BEARING BALL	2						DIA35
7	T2185-43871	SHIM, 0.8 dnr v	2						
8	T2185-43881	SHIM, 1.0 dnr v	2						
9	T2185-43891	SHIM, 1.2 obs v	2						
10	T5815-43442	BEVEL GEAR CASE	2						
10	T5815-43443	BEVEL GEAR CASE	2					<--O-->	
11	T5815-43811	SHAFT,DIFF. GEAR LH	1						
12	T5815-43821	SHAFT,DIFF. GEAR RH	1						
13	T5815-43841	GEAR, 11 BEVEL	2						

----> Old replace New
<---- New replace Old
<-X-> Not interchangeable
<---> Interchangeable
<-O-> Interchangeable with another part(s)
* Please place an order assy(*)

https://tractormanualz.com/

TC2-G316003

FRONT AXLE CASE GROUP

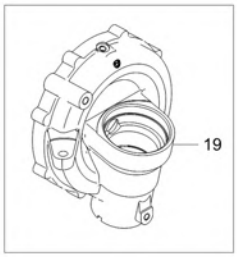

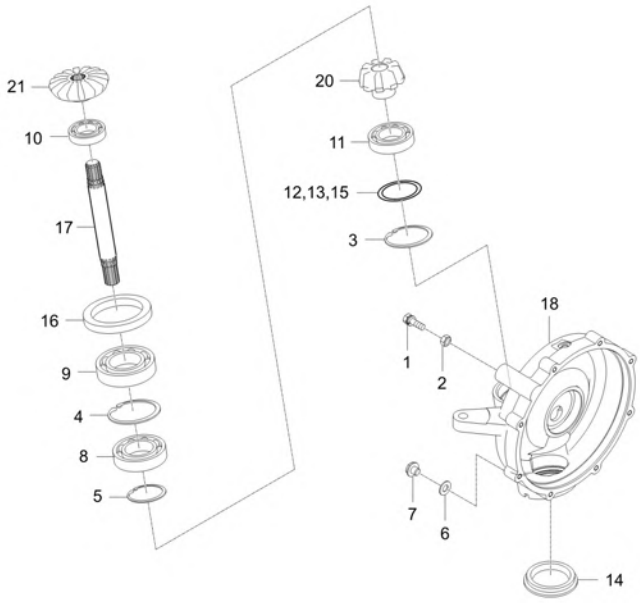

A : CK2610

No.	Part Number	Description	Qty A	Qty B	Qty C	Qty D	Qty E	I.C	Remark
1	01175-51250	BOLT	2						7T
2	02076-50120	NUT	2						
3	04611-00720	RING,SNAP	2						DIA72
4	04611-00800	RING, SNAP	2						DIA80
5	04612-00500	SNAP RING	2						
6	04717-01000	WASHER, SEAL	2						M10
7	06331-45010	PLUG v	2						M10XP1.25
8	08101-06010	BEARING,BALL	2						#6010
9	08101-06012	BEARING,BALL	2						
10	08101-06206	BEARING, BALL v	2						#6206
11	08101-06207	BEARING BALL	2						DIA35
12	T2185-42361	SHIM1.6	2						
13	T2185-42371	SHIM1.8	2						
14	T2185-43541	PLUG	2						
15	T2185-43901	SHIM, 1.4 dnr v	2						
16	T5715-27131	OIL SEAL	2						
17	T5815-43461	BEVEL GEAR SHAFT	2						
18	T5815-43631	CASE, FRONT AXLE LH	1						

----> Old replace New
<----> Interchangeable
* Please place an order assy(*)
<---- New replace Old
<-O-> Interchangeable with another part(s)
<-X-> Not interchangeable

https://tractormanualz.com/

TC2-G316003

FRONT AXLE CASE GROUP

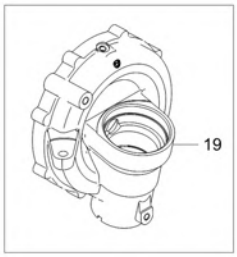

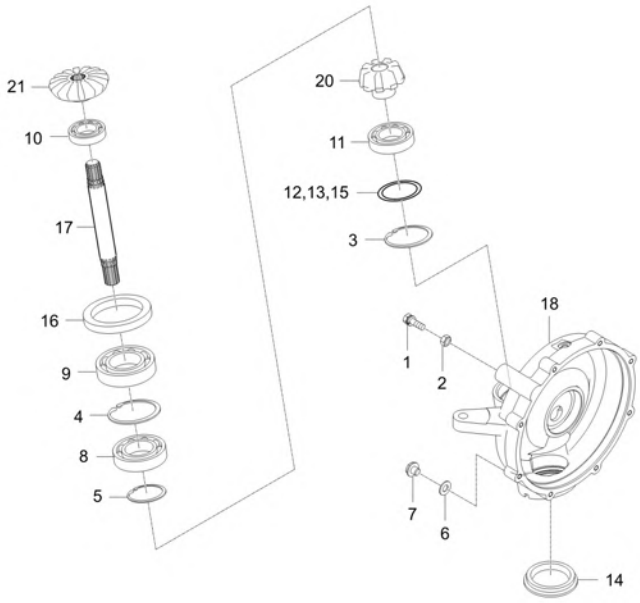

A : CK2610

No.	Part Number	Description	Qty A	Qty B	Qty C	Qty D	Qty E	I.C	Remark
18	T5815-43632	CASE, FRONT AXLE LH	1					<--O-->	
19	T5815-43641	CASE, FRONT AXLE RH	1						
19	T5815-43642	CASE, FRONT AXLE RH	1					<--O-->	
20	T5815-43651	GEAR,BEVEL 9	2						
21	T5815-43831	GEAR,BEVEL 16	2						

----> Old replace New
<---- New replace Old
<-X-> Not interchangeable
<---> Interchangeable
<-O-> Interchangeable with another part(s)
* Please place an order assy(*)

https://tractormanualz.com/

TC2-G321001

STEERING CYLINDER GROUP

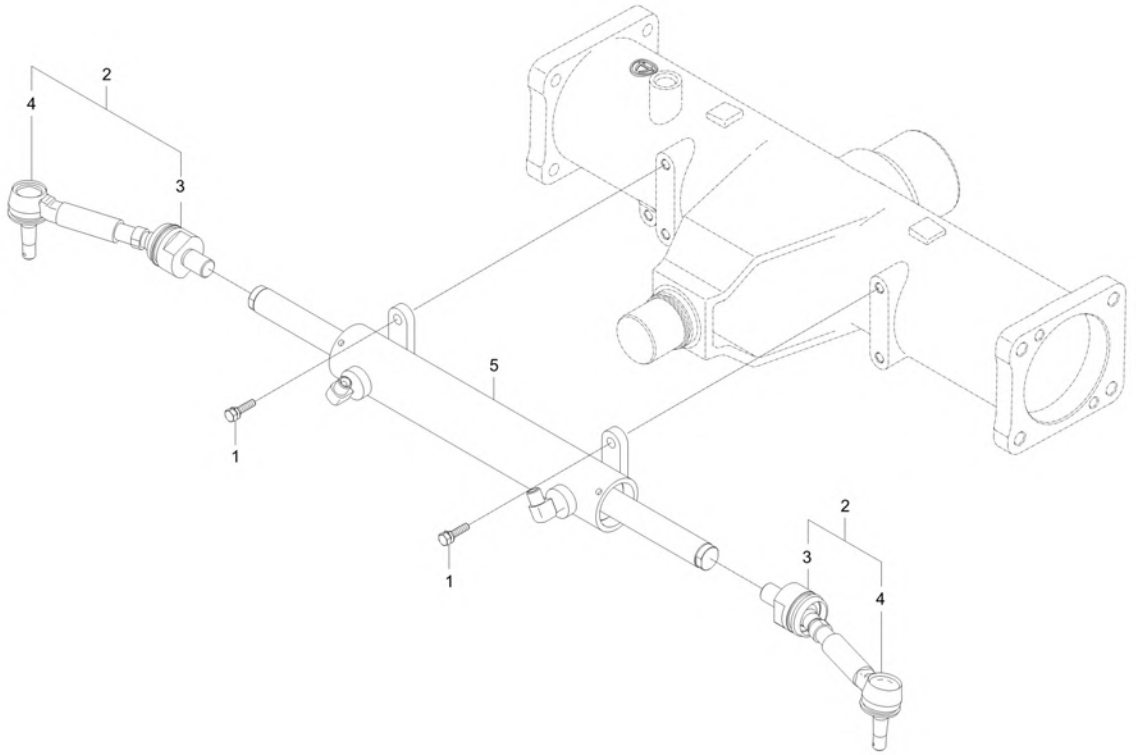

A : CK2610

No.	Part Number	Description	Qty A	Qty B	Qty C	Qty D	Qty E	I.C	Remark
1	01133-51025	BOLT	4						M10XP1.25
2	T4670-63601	BALL JOINT ASSY dnr v	1						
2	T4670-63602	BALL JOINT ASSY	1 TL9400149 ~ WL9400080					<------	
3	TB13-0004A	ASSY END, RACK	1						
4	T4665-63622	ASSY ROD TIE v	1						
5	T5815-45201	CYLINDER ASSY	1						

----> Old replace New
<---> Interchangeable
* Please place an order assy(*)
<---- New replace Old
<-O-> Interchangeable with another part(s)
<-X-> Not interchangeable

https://tractormanualz.com/

TC2-G332001

FRONT AXLE BRACKET GROUP

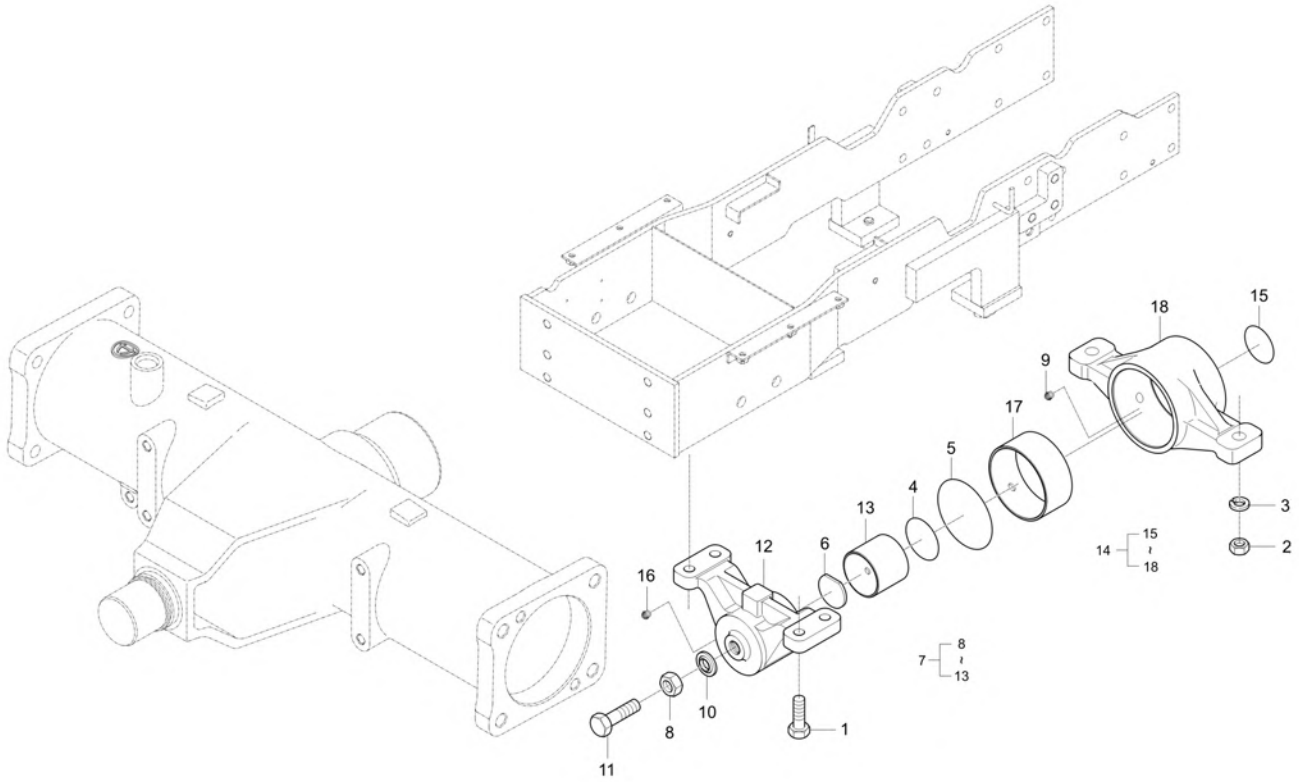

A : CK2610

No.	Part Number	Description	Qty A	Qty B	Qty C	Qty D	Qty E	I.C	Remark
1	01177-51235	BOLT v	2						M12XP1.25
2	02176-50140	NUT	2						M14XP1.5
3	04512-50140	SPRING WASHER	2						M14
4	04811-00490	O RING	1						
5	04811-50850	O RING	1						
6	38440-4467-3	COLLAR	1						
7	T2185-41601	ASS'Y, FRONT BRAKET v	1						
7	T2185-41602	BRACKET ASSY, FR v	1 RL9400003 ~ WL9400080					<------	
8	02172-50160	NUT	1						M16*P1.5
9	06613-10010	NIPPLE, GREASE	1						PT1/8
9	06613-20010	NIPPLE, GREASE 45 degree v	1					<------	
10	38440-4475-1	WASHER SEAL	1						
11	38630-4476-1	BOLT	1						DIA16
12	T2185-41611	BRAKET,FRONT	1						
13	T4520-43601	BUSH DX v	1						50-40DX
14	T5815-41631	REAR BRAKET ASSEMBLY	1						
14	T5815-41632	REAR BRAKET ASSEMBLY	1 RL9400003 ~ WL9400080					<------	
15	04811-00420	O RING	1						DIA41.7

----> Old replace New
<---- New replace Old
<-X-> Not interchangeable
<---> Interchangeable
<-O-> Interchangeable with another part(s)
* Please place an order assy(*)

https://tractormanualz.com/

TC2-G332001

FRONT AXLE BRACKET GROUP

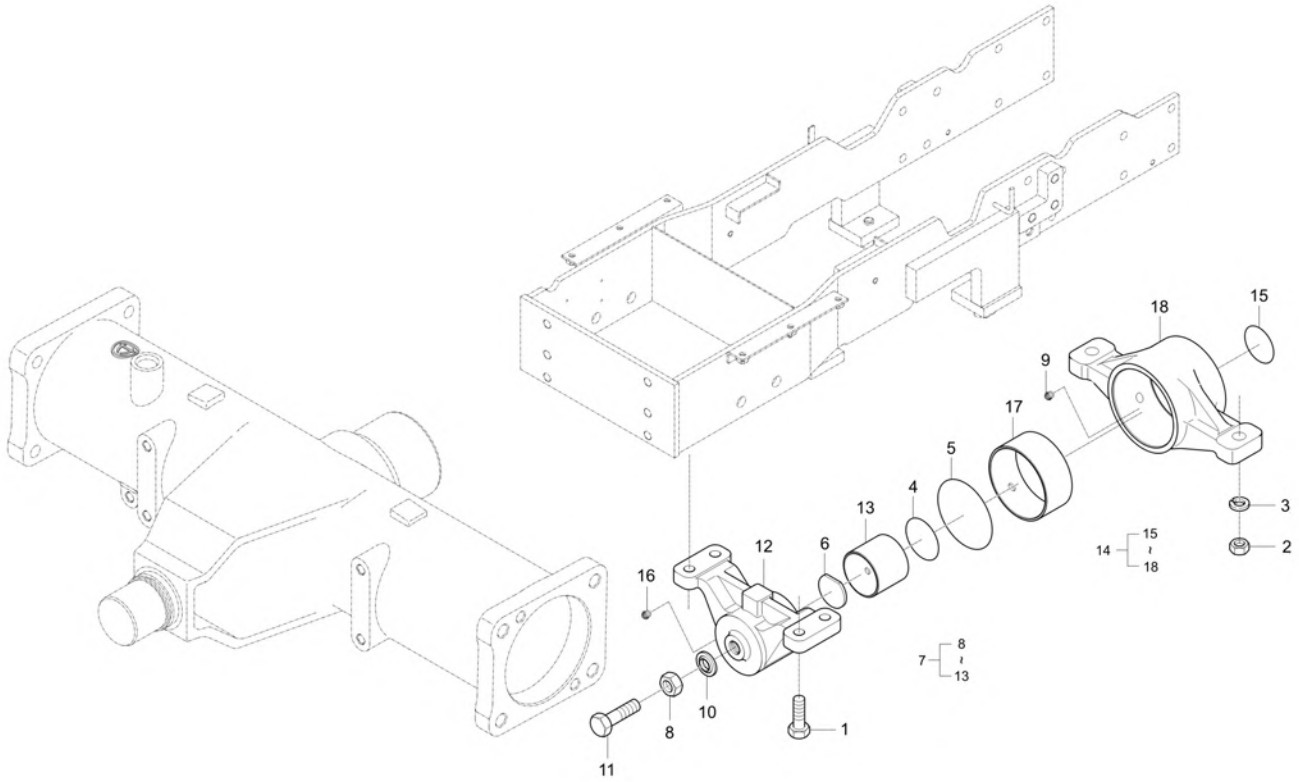

A : CK2610

No.	Part Number	Description	Qty A	Qty B	Qty C	Qty D	Qty E	I.C	Remark
16	06613-10010	NIPPLE, GREASE	1						PT1/8
16	06613-20010	NIPPLE, GREASE 45 degree v	1					<------	
17	T2185-41691	BUSH,DX	1						
18	T5815-41621	BRACKET, REAR obs v	1						

----> Old replace New
<---- New replace Old
<-X-> Not interchangeable
<---> Interchangeable
<-O-> Interchangeable with another part(s)
* Please place an order assy(*)

https://tractormanualz.com/

TC2-G317005

FRONT AXLE GROUP

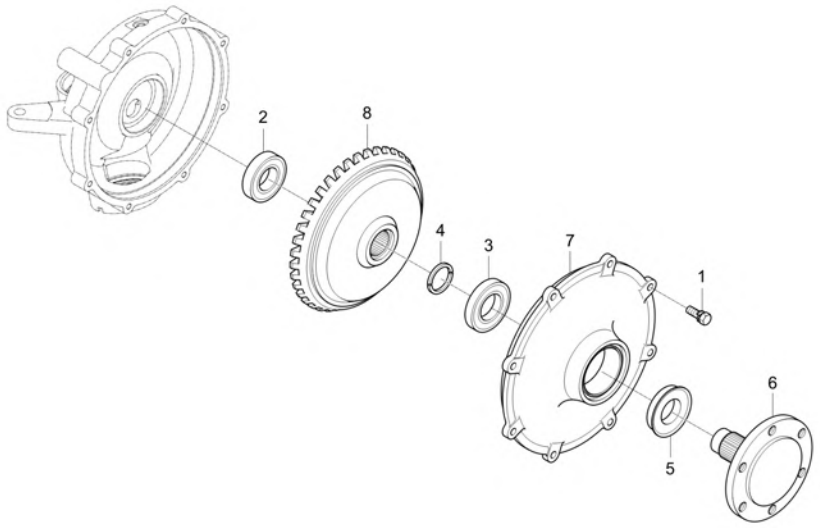

A : CK2610

No.	Part Number	Description	Qty A	Qty B	Qty C	Qty D	Qty E	I.C	Remark
1	01123-50825	BOLT WITH WASHER	16						M8XP1.25
2	08101-06306	BEARING, BALL	2						DIA30
3	08101-06307	BEARING, BALL	2						DIA35
4	37650-4368-0	PIN	4						DIA5*55
5	76802-5691-0	SEAL,OIL	2						
6	T5815-43611	AXLE, FRONT dnr v	2						
6	T5815-43612	AXLE, FRONT	2 TL9400149 ~ WL9400080					<----->	
7	T5815-43621	COVER,FRONT AXLE	2						
8	T5815-43661	GEAR,42 BEVEL	2						

----> Old replace New
<---- New replace Old
<-X-> Not interchangeable
<---> Interchangeable
<-O-> Interchangeable with another part(s)
* Please place an order assy(*)

https://tractormanualz.com/

TC2-G331001

PROPELLER SHAFT GROUP

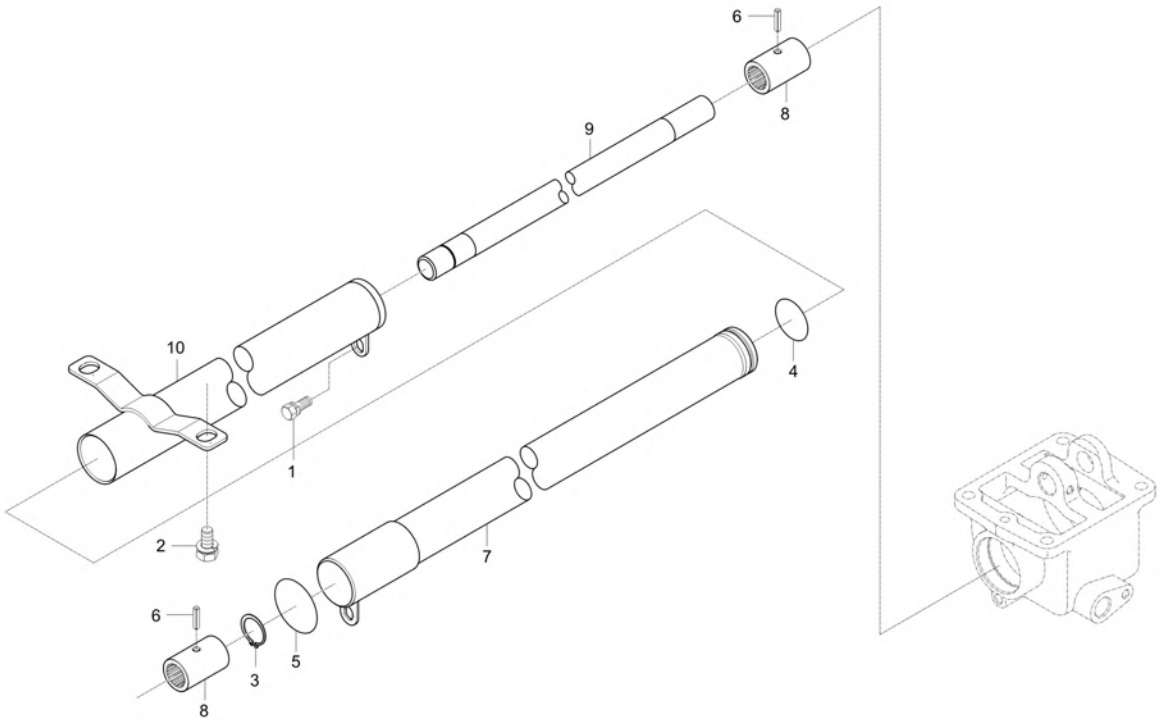

A : CK2610

No.	Part Number	Description	Qty A	Qty B	Qty C	Qty D	Qty E	I.C	Remark
1	01123-50816	Hex Head Cap Screw	2						M8XP1.25
1	01123-50816	Hex Head Cap Screw	1					<----->	M8XP1.25
2	01133-51220	BOLT, WASHER	2						M12*P1.25
3	04612-00250	CIR-CLIP	1						DIA25
4	04811-00460	O RING	1						
5	04811-06350	O RING	1						DIA35.2
6	05411-00636	PIN, SPRING	1						
6	05411-00635	PIN, SPRING	1					<----->	DIA6.4XL35
7	T2546-44582	COVER 1, PROPELLER SHAFT	1						
8	T4620-44592	COUPLING	2						OD42.7*T1.6
9	T5815-44581	SHAFT,PROPELLER dnr v	1						
9	T5815-44582	SHAFT, PROPELLER v	1					<----->	
10	T5815-44591	COVER 1,PROPELLER	1						
10	T5815-44592	COVER 1,PROPELLER	1					<----->	

----> Old replace New
<---- New replace Old
<-X-> Not interchangeable
<---> Interchangeable
<-O-> Interchangeable with another part(s)
* Please place an order assy(*)

https://tractormanualz.com/

TC2-G341007

FRONT WHEEL GROUP

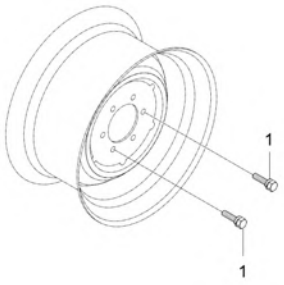

A : CK2610

No.	Part Number	Description	Qty A	Qty B	Qty C	Qty D	Qty E	I.C	Remark
1	01133-51225	BOLT, WASHER v	12						M12XP1.25

----> Old replace New
<----> Interchangeable
* Please place an order assy(*)
<---- New replace Old
<-O-> Interchangeable with another part(s)
<-X-> Not interchangeable

https://tractormanualz.com/

TC2-G431021 POWER STEERING UNIT GROUP

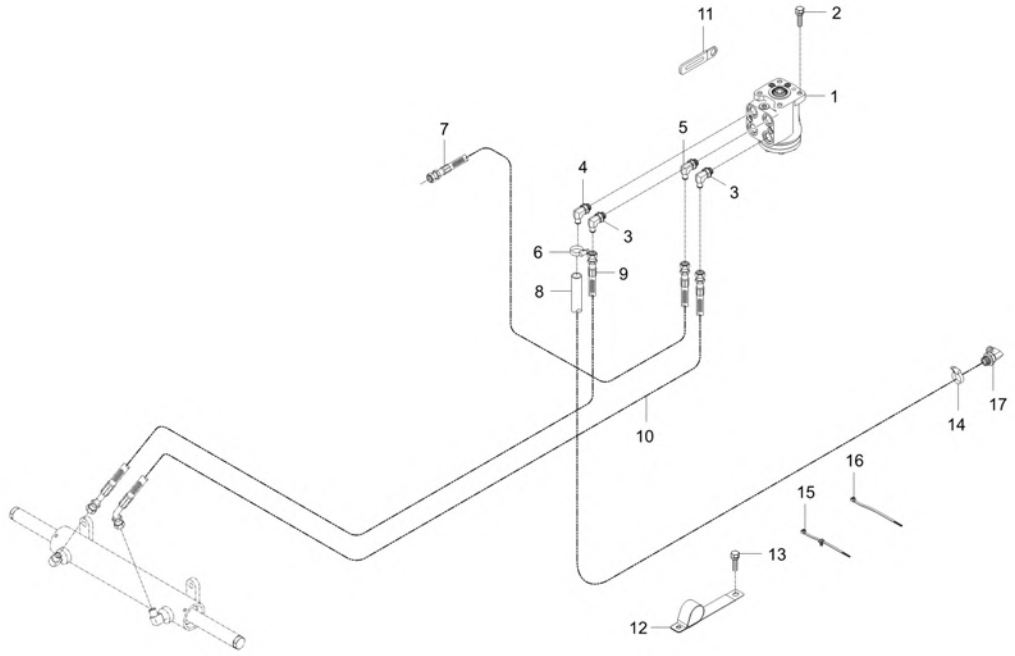

A : CK2610

No.	Part Number	Description	Qty A	Qty B	Qty C	Qty D	Qty E	I.C	Remark
1	T5855-41501	UNIT, POWER STEERING	1						80cc/rev
2	01123-51025	BOLT	4						M10X1.5
3	T4930-45681	ELBOW	2						PF1/4, 3/4-16UNF
4	T4682-37211	ELBOW	1						
5	T4930-45671	ELBOW	1						PF3/8, 3/4-16UNF
6	F6800-91851	BAND, HOSE	1						12-22mm
7	T5816-41512	HOSE P, STEERING	1						
8	T5810-41521	HOSE T, STEERING	1						
9	T5855-41531	HOSE L, STEERING	1						
10	T5855-41541	HOSE R, STEERING	1						
11	37155-3447-1	CLAMP,CORD	1						-
12	T4686-50963	CLAMP, HOSE	1						
13	01125-50814	WITH WASHER BOLT	1						M8XP1.25
14	F6800-91851	BAND, HOSE	1						12-22mm
15	T2198-82571	BAND CABLE	1						
16	T2185-82551	CABLE TIE, BLACK / 300	2						L290
17	T4682-34142	ELBOW	1						

----> Old replace New <---- New replace Old <-X-> Not interchangeable
<---> Interchangeable <-O-> Interchangeable with another part(s)
* Please place an order assy(*)

https://tractormanualz.com/

TC2-G446024

A : CK2610

No.	Part Number	Description	Qty A	Qty B	Qty C	Qty D	Qty E	I.C	Remark
1	TC24-A0025A		1						

----> Old replace New
<---> Interchangeable
* Please place an order assy(*)
<---- New replace Old
<-O-> Interchangeable with another part(s)
<-X-> Not interchangeable

https://tractormanualz.com/

TC2-G431002 POWER STEERING UNIT GROUP

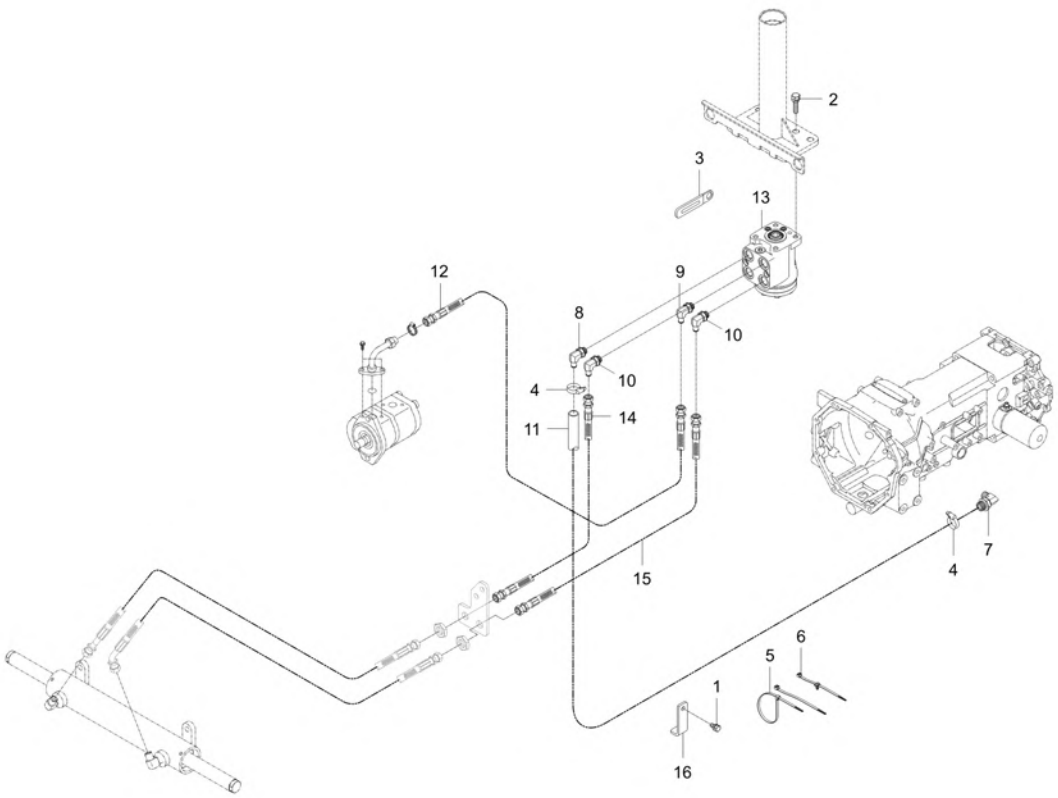

A : CK2610

No.	Part Number	Description	Qty A	Qty B	Qty C	Qty D	Qty E	I.C	Remark
1	01123-50814	BOLT, WASHER	1						M8XP1.25
2	01123-51025	BOLT	4						M10X1.5
3	37155-3447-1	CLAMP,CORD	1						-
4	52200-2523-1	HOSBAND	1						
4	F6800-91851	BAND, HOSE	1					<----->	12-22mm
5	T2185-82551	CABLE TIE, BLACK / 300	2						L290
6	T2198-82571	BAND CABLE	1						
7	T4682-34142	ELBOW	1						
8	T4682-37211	ELBOW	1						
9	T4930-45671	ELBOW	1						PF3/8, 3/4-16UNF
10	T4930-45681	ELBOW	2						PF1/4, 3/4-16UNF
11	T5810-41521	HOSE T, STEERING	1						
12	T5816-41512	HOSE P, STEERING	1						
13	T5855-41501	UNIT, POWER STEERING	1						80cc/rev
14	T5855-41532	HOSE L, STEERING	1						
15	T5855-41542	HOSE R, STEERING	1						
16	T5855-42031	HOLDER, HOSE	1						

----> Old replace New <---- New replace Old <-X-> Not interchangeable
<---> Interchangeable <-O-> Interchangeable with another part(s)
* Please place an order assy(*)

https://tractormanualz.com/

TC2-G463501

LIFT CYLINDER GROUP

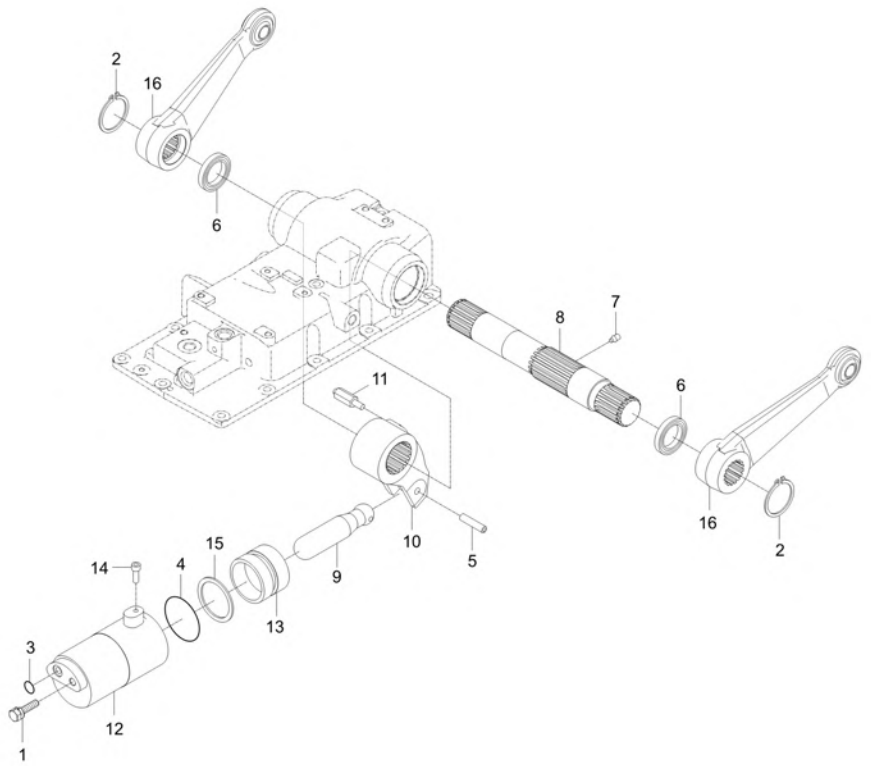

A : CK2610

No.	Part Number	Description	Qty A	Qty B	Qty C	Qty D	Qty E	I.C	Remark
1	01133-51222	WITH_WASHER_BOLT	1						M12XP1.25
2	04612-00450	RING,SNAP	2						DIA45
3	04810-00140	O RING	1						P14
4	04810-00600	O RING	1						
5	05411-00855	PIN, SPRING	1						8*55
6	09500-45609	SEAL,OIL	2						DIA45
7	T2610-37453	SCREW, SET	1						M10*P1.5
8	T5710-37121	SHAFT HYD ARM	1						
9	T5710-37241	CONNECTING ROD	1						
10	T5855-43021	CRANK	1						
11	T5855-43031	PIN	1						
12	T5855-43042	CYLINDER	1						
13	T5855-43051	PISTON,HYDRAULIC	1						
14	T5855-43061	BOLT, HEXAGON SOCKET	1						
15	T5855-43071	BACK-UP RING dnr v	1						
16	T5855-43082	ASSY, LIFT ARM	2						

----> Old replace New <---- New replace Old <-X-> Not interchangeable
<---> Interchangeable <-O-> Interchangeable with another part(s)
* Please place an order assy(*)

https://tractormanualz.com/

TC2-G411005

SUCTION LINE GROUP

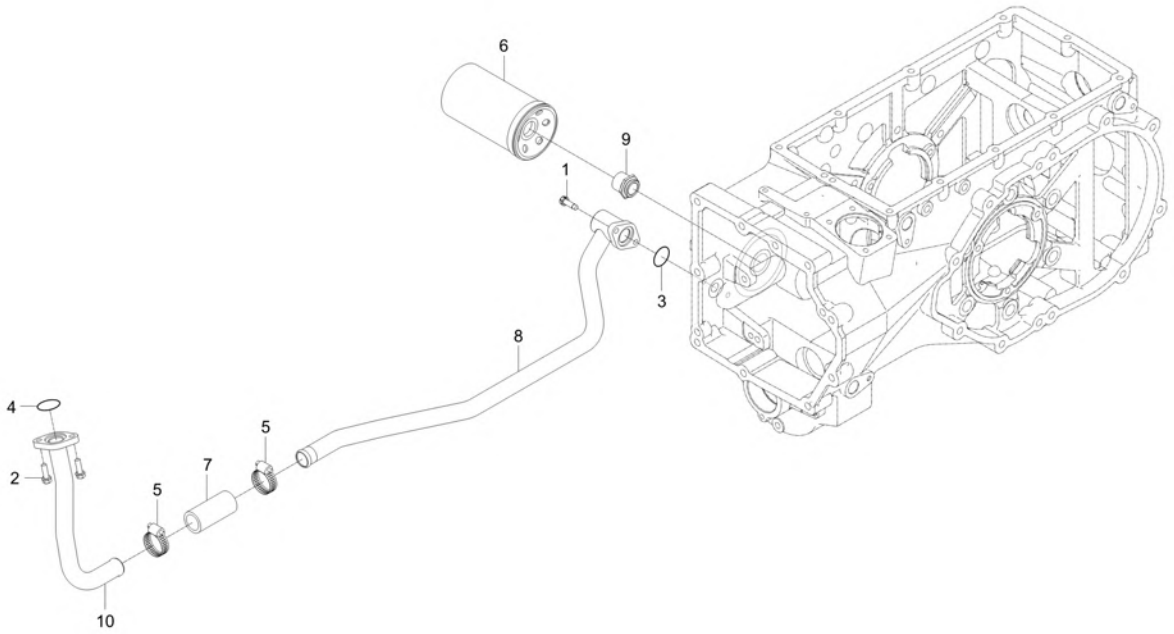

A : CK2610

No.	Part Number	Description	Qty A	Qty B	Qty C	Qty D	Qty E	I.C	Remark
1	01123-50820	BOLT, WASHER v	2						M8XP1.25
2	01123-50825	BOLT WITH WASHER	2						M8XP1.25
3	04810-00280	O RING	1						DIA27.7
4	04810-00280	O RING	1						DIA27.7
5	31355-3819-1	HOSE BAND	2 ~ TL9400148						스 탠40#
5	F6800-91841	BAND, HOSE	2 TL9400149 ~ WL9400080					<----->	25-40mm
6	T2185-38031	FILTER, HYDRAULIC sp	1						
6	T4260-38125	OIL PRESSURE FILTER v	1					<------	
7	T4125-38151	HOSE,RUBBER	1						
8	T5855-46002	TUBE, INLET	1 ~ TL9400076						
8	T5855-46003	TUBE, INLET	1 TL9400077 ~ WL9400080					<----->	
9	T5855-46502	CONNECTION	1						
10	TC24-0008A	PIPE, SUCTION-T3	1 ~ TL9400076						
10	TC24-0008B	PIPE, SUCTION-T3	1 TL9400077 ~ WL9400080					<----->	

----> Old replace New
<---- New replace Old
<-X-> Not interchangeable
<---> Interchangeable
<-O-> Interchangeable with another part(s)
* Please place an order assy(*)

https://tractormanualz.com/

TC2-G412003

GEAR PUMP GROUP(T3)

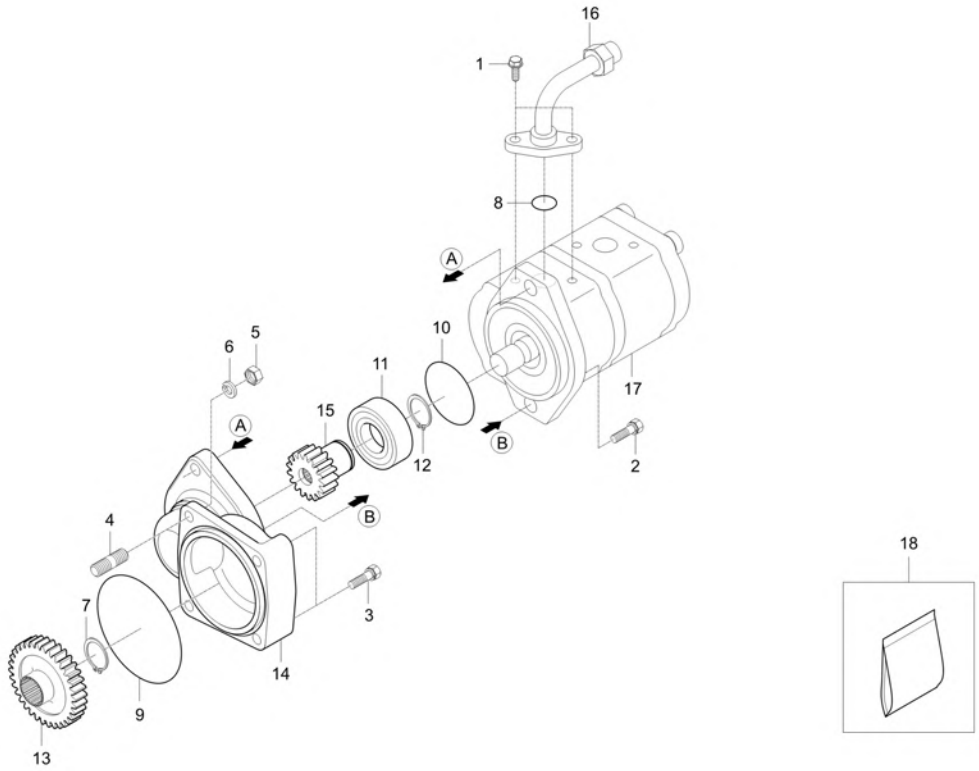

A : CK2610

No.	Part Number	Description	Qty A	Qty B	Qty C	Qty D	Qty E	I.C	Remark
1	01123-50825	BOLT WITH WASHER	2						M8XP1.25
2	01123-50845	BOLT, WASHER v	2						M8*P1.25
3	01133-51030	WITH WASHER BOLT	2						M10XP1.25
4	01513-50822	STUD	2						M8XP1.25
5	02156-50080	NUT v	2						M8XP1.25
6	04512-50080	SPRING WASHER	2						M08
7	04612-00250	CIR-CLIP	1						DIA25
8	04810-00180	O RING	1						
8	04817-00180	O_RING	1					<----->	DIA17.8
9	04811-10800	O-RING	1						DIA79.5
10	04811-10850	O RING	1						
11	08241-05205	BEARING 5205	1						
12	15471-9536-1	SNAP_RING	1						Φ25
13	T2185-76021	GEAR,34	1						
14	T4620-76002	HOLDER,GEAR PUMP	1						
15	T4620-76031	GEAR 17	1						
16	TC24-0002C	TUBE, HYD-P	1						
17	TC24-0019A	PUMP, GEAR	1						6.5X10

----> Old replace New <---- New replace Old <-X-> Not interchangeable
<---> Interchangeable <-O-> Interchangeable with another part(s)
* Please place an order assy(*)

https://tractormanualz.com/

TC2-G412003

GEAR PUMP GROUP(T3)

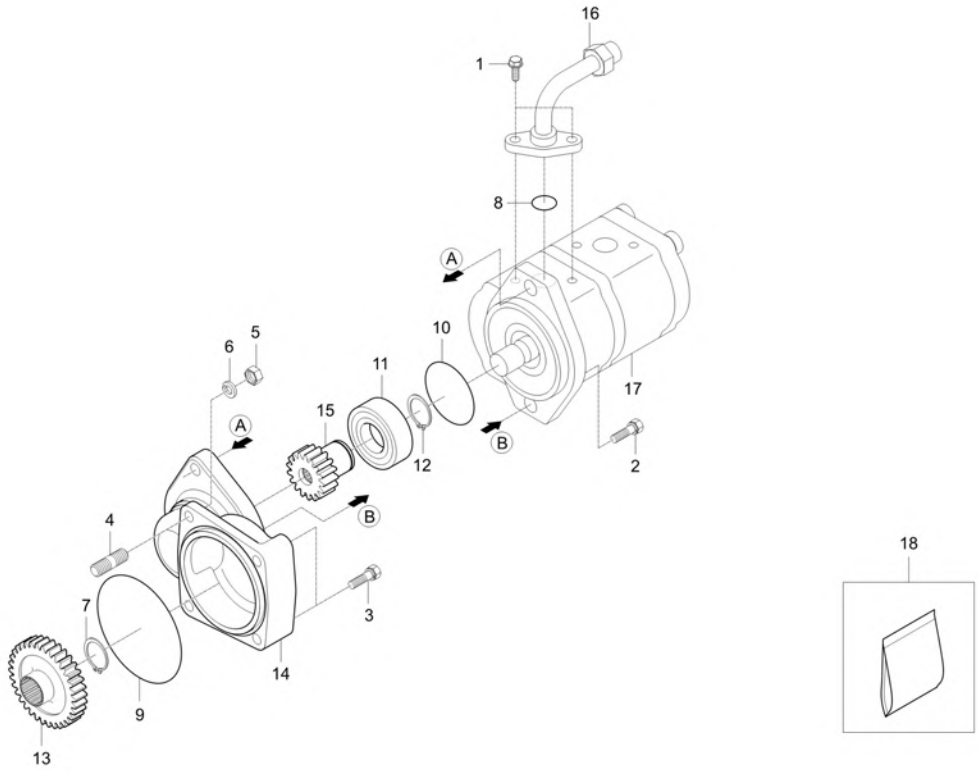

A : CK2610

No.	Part Number	Description	Qty A	Qty B	Qty C	Qty D	Qty E	I.C	Remark
18	TC24-0019A-KA	GEAR PUMP SEAL KIT	1						1.0X1219X2 438

----> Old replace New
<---- New replace Old
<-X-> Not interchangeable
<---> Interchangeable
<-O-> Interchangeable with another part(s)
* Please place an order assy(*)

https://tractormanualz.com/

TC2-G441006 JOYSTICK VALVE GROUP(T3)

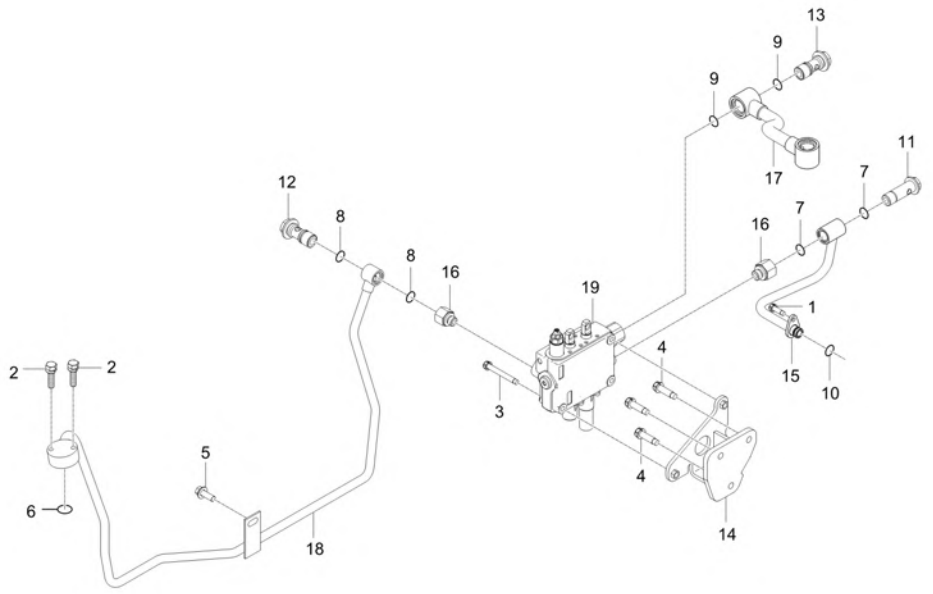

A : CK2610

No.	Part Number	Description	Qty A	Qty B	Qty C	Qty D	Qty E	I.C	Remark
1	01123-50820	BOLT, WASHER v	1						M8XP1.25
2	01123-50840	BOLT	2						M8XP1.25
3	01123-50865	BOLT, WASHER	1						M8XP1.25
4	01133-51025	BOLT	1						M10XP1.25
5	01135-51020	BOLT, WASHER	1						M10*1.25
6	04810-00200	O RING v	1 RL9400001 ~ TL9400148						DIA19.8
6	04816-00200	O RING	1 TL9400149 ~ WL9400080					<------	DIA19.8
6	04817-00200	O RING	4					<----->	DIA19.8
7	04810-00200	O RING v	2						DIA19.8
7	04816-00200	O RING	2					<------	DIA19.8
7	04817-00200	O RING	1					<----->	DIA19.8
8	04810-00200	O RING v	2						DIA19.8
8	04816-00200	O RING	2					<------	DIA19.8
8	04817-00200	O RING	2					<----->	DIA19.8
9	04810-00200	O RING v	4						DIA19.8
9	04816-00200	O RING	4					<------	DIA19.8
9	04817-00200	O RING	2					<----->	DIA19.8
10	04811-00140	O RING	1						

----> Old replace New <---- New replace Old <-X-> Not interchangeable
<---> Interchangeable <-O-> Interchangeable with another part(s)
* Please place an order assy(*)

https://tractormanualz.com/

TC2-G441006

JOYSTICK VALVE GROUP(T3)

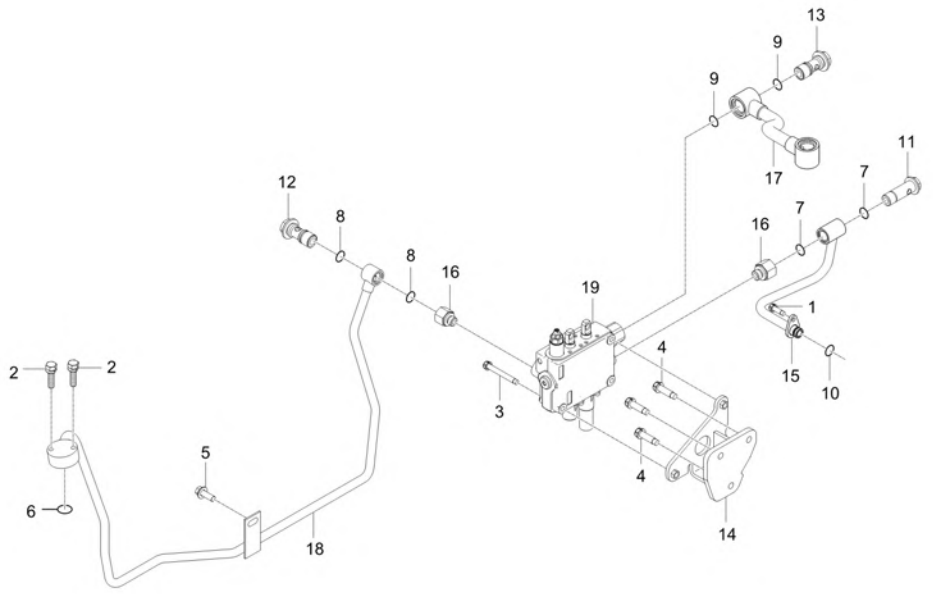

A : CK2610

No.	Part Number	Description	Qty A	Qty B	Qty C	Qty D	Qty E	I.C	Remark
10	04816-00140	O-RING	1					<------	DIA13.8
11	T2360-37081	BOLT,JOINT	1						
11	TC24-0238A	BOLT, JOINT	1					<----->	
12	T4620-37092	JOINT BOLT v	1						
12	TC24-0238A	BOLT, JOINT	2					<----->	
13	T4620-37092	JOINT BOLT v	2						
13	TC24-0239A	BOLT, JOINT	1					<----->	
14	T5855-47014	JOYSTICK VALVE SUPPORT	1						
15	T5855-47042	TUBE, HYDRAULIC	1						
16	T5855-47091	CONNECTION	2						
17	T5857-47032	TUBE J2, HYD	1						
18	TC24-0012C	TUBE, HYD-J1(T3)	1						
18	TC24-0012D	TUBE HYD J1 T3	1 TL9400149 ~ WL9400080					<--O-->	
19	TC24-0038A	VALVE, JOYSTICK dnr	1 TL9400133 ~ SL9400270						
19	TC24-0138A	VALVE, JOYSTICK v	1 SL9400271 ~ WL9400080					<----->	

----> Old replace New
<---- New replace Old
<-X-> Not interchangeable
<---> Interchangeable
<-O-> Interchangeable with another part(s)
* Please place an order assy(*)

https://tractormanualz.com/

TC2-G461001 LIFT CONTROL VALVE(MEC) GROUP

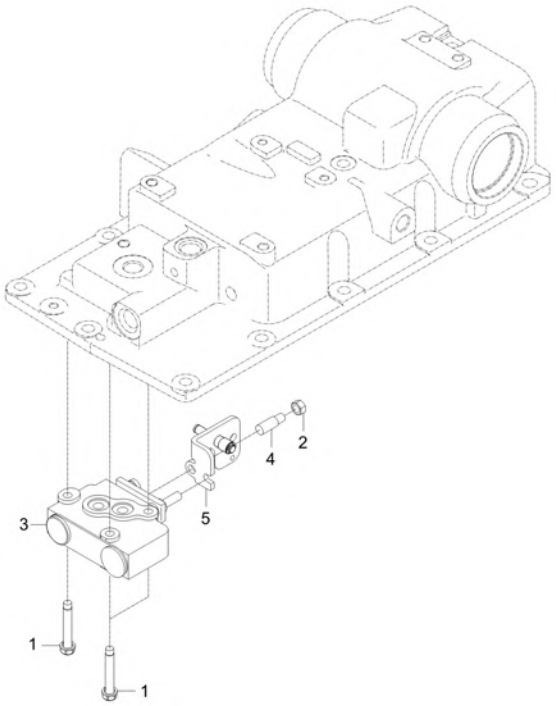

A : CK2610

No.	Part Number	Description	Qty A	Qty B	Qty C	Qty D	Qty E	I.C	Remark
1	01123-50845	BOLT, WASHER v	3						M8*P1.25
2	02156-50080	NUT v	1						M8XP1.25
3	T5710-37301	VALVE dnr v	1						
3	T5710-37302	VALVE v	1 TL9400049 ~ WL9400080					<----->	
4	T5710-37571	PIN	1						
5	T5715-37562	PUSH PLATE ASSY B	1						

----> Old replace New
<---> Interchangeable
* Please place an order assy(*)
<---- New replace Old
<-O-> Interchangeable with another part(s)
<-X-> Not interchangeable

https://tractormanualz.com/

TC2-G463005

HYDRAULIC CYLINDER GROUP

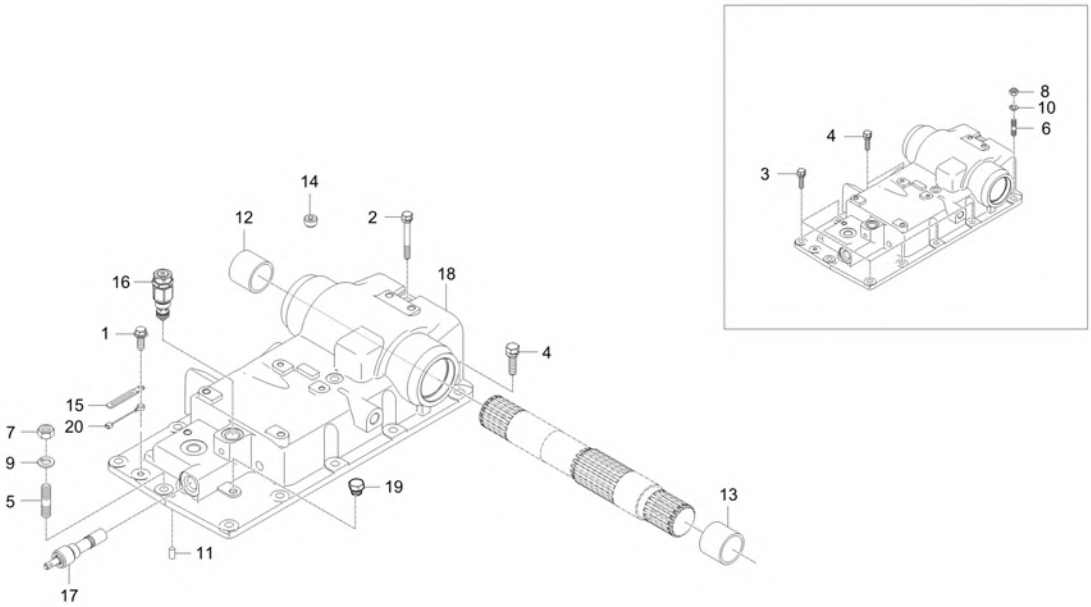

A : CK2610

No.	Part Number	Description	Qty A	Qty B	Qty C	Qty D	Qty E	I.C	Remark
1	01123-50812	BOLT	1						M8P1.25
2	01133-51003	OB-BOLT	1						
3	01133-51025	BOLT	6						M10XP1.25
4	01133-51230	WASHER BOLT	2						M12XP1.25
5	01517-51030	STUD	1						
6	01574-51230	STUD	1						M12XP1.25
7	02176-50120	NUT	1						M12XP1.25
8	02176-50120	NUT	1						M12XP1.25
9	04512-50120	SPRING WASHER	1						M12
10	04512-50120	SPRING WASHER	1						M12
11	05012-00818	PIN, PARALLEL	1						DIA8XL18
12	08511-04550	BUSH	1						
13	08511-05050	BUSH	1						
14	15521-9603-3	PLUG	1						DIA12*12,PT 1/4
15	37150-3447-1	WIR'G CLAMP	1						T0.5
16	T5210-37311	ASSY, RELIEF VALVE	1						
17	T5710-37441	FLOWCONTROL VALVE	1						
18	T5855-43015	BODY, POWERLIFT	1						

----> Old replace New
<----> Interchangeable
* Please place an order assy(*)
<---- New replace Old
<-O-> Interchangeable with another part(s)
<-X-> Not interchangeable

https://tractormanualz.com/

TC2-G463005

HYDRAULIC CYLINDER GROUP

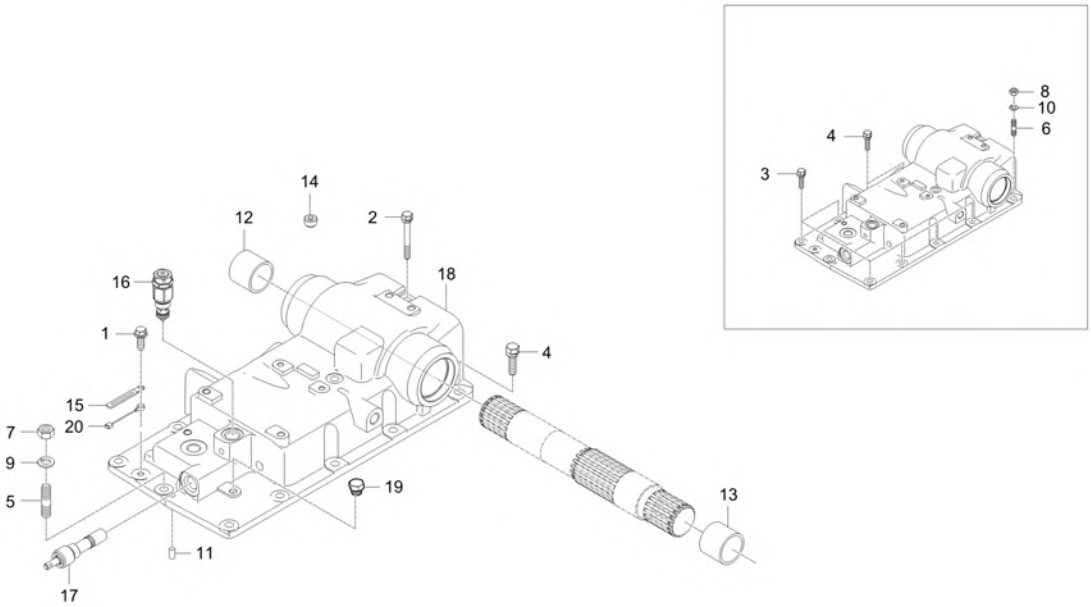

A : CK2610

No.	Part Number	Description	Qty A	Qty B	Qty C	Qty D	Qty E	I.C	Remark
18	T5855-43016	BODY, POWERLIFT	1					<------	
18	T5855-43017	BODY, POWERLIFT	1					<----->	
18	T5855-43018	BODY, POWERLIFT	1					<------	
18	T5855-43019	BODY, POWERLIFT	1					<--O-->	
19	TG14-0137A	PLUG	1						
20	T4620-69521	WIRE HARNESS 4	1						

----> Old replace New
<----> Interchangeable
* Please place an order assy(*)
<---- New replace Old
<-O-> Interchangeable with another part(s)
<-X-> Not interchangeable

https://tractormanualz.com/

TC2-G463502

LIFT CYLINDER GROUP

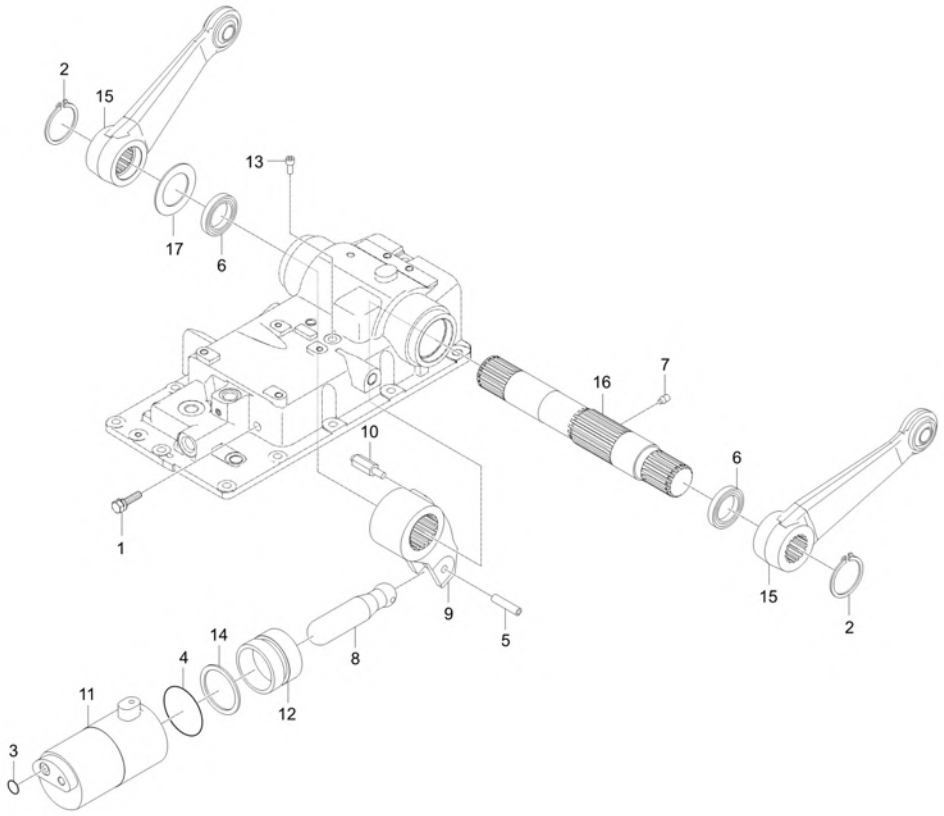

A : CK2610

No.	Part Number	Description	Qty A	Qty B	Qty C	Qty D	Qty E	I.C	Remark
1	01133-51222	WITH_WASHER_BOLT	1						M12XP1.25
2	04612-00450	RING,SNAP	2						DIA45
3	04810-00140	O RING	1						P14
4	04810-00600	O RING	1						
4	TC24-0197A	O RING	1					<----->	Φ60
5	05411-00855	PIN, SPRING	1						8*55
6	09500-45609	SEAL,OIL	2						DIA45
7	T2610-37453	SCREW, SET	1						M10*P1.5
8	T5710-37241	CONNECTING ROD	1						
9	T5855-43021	CRANK	1						
10	T5855-43031	PIN	1						
11	T5855-43042	CYLINDER	1						
12	T5855-43051	PISTON,HYDRAULIC	1						
13	T5855-43061	BOLT, HEXAGON SOCKET	1						
14	T5855-43071	BACK-UP RING dnr v	1						
14	T5855-43072	BACK UP RING v	1					<----->	
15	T5855-43082	ASSY, LIFT ARM	2						
16	TC24-0164A	ARM SHAFT	1						

----> Old replace New <---- New replace Old <-X-> Not interchangeable
<---> Interchangeable <-O-> Interchangeable with another part(s)
* Please place an order assy(*)

https://tractormanualz.com/

TC2-G463502

LIFT CYLINDER GROUP

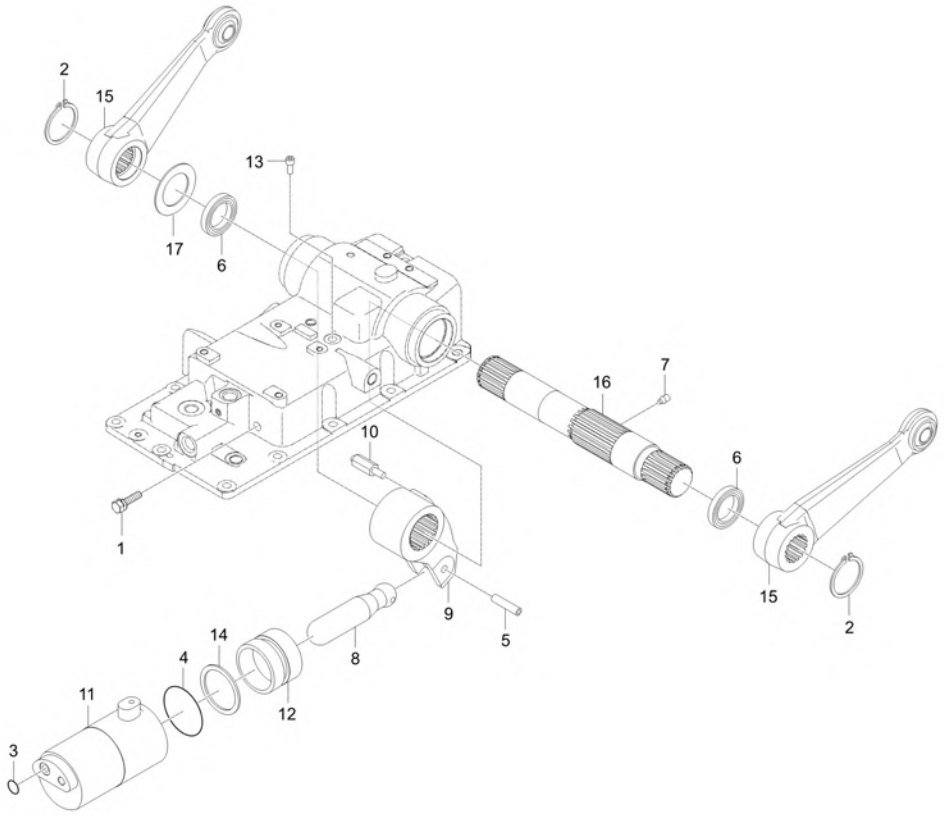

A : CK2610

No.	Part Number	Description	Qty A	Qty B	Qty C	Qty D	Qty E	I.C	Remark
17	TD24-0008A	WASHER	2						

----> Old replace New
<---> Interchangeable
* Please place an order assy(*)
<---- New replace Old
<-O-> Interchangeable with another part(s)
<-X-> Not interchangeable

https://tractormanualz.com/

TC2-G464001

DOWN SPEED CONTROL GROUP

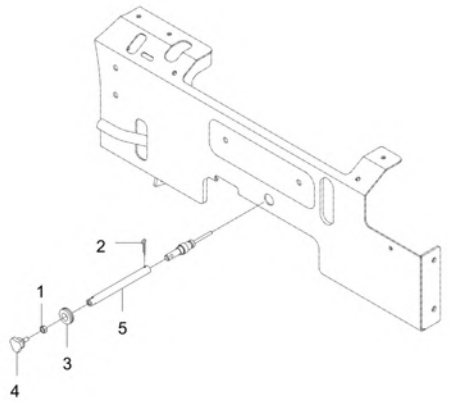

A : CK2610

No.	Part Number	Description	Qty A	Qty B	Qty C	Qty D	Qty E	I.C	Remark
1	02056-50060	NUT	1						M6XP1.0
2	05511-50320	PIN, SPLIT	1						DIA2.7XL20
3	31355-2949-1	GROMMET	1						
4	82KC-0807	KNOB	1						
5	T5855-62051	ROD	1						DIA12

----> Old replace New
<---> Interchangeable
* Please place an order assy(*)
<---- New replace Old
<-O-> Interchangeable with another part(s)
<-X-> Not interchangeable

https://tractormanualz.com/

TC2-G464501

TOP LINK DEVICE GROUP

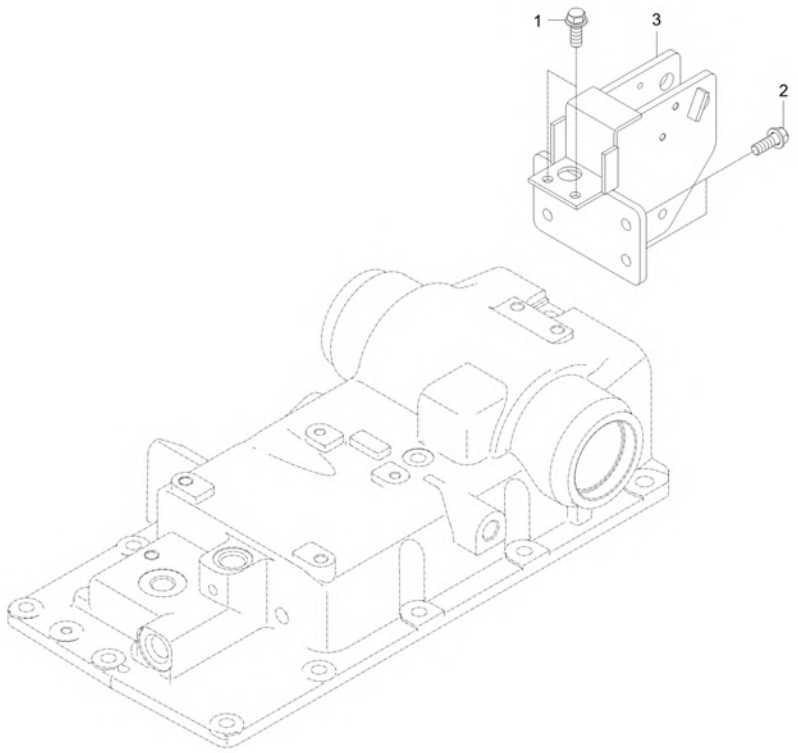

A : CK2610

No.	Part Number	Description	Qty A	Qty B	Qty C	Qty D	Qty E	I.C	Remark
1	01133-51016	BOLT	2						M10*P1.25
2	01133-51020	BOLT	4						M10XP1.25
3	T5855-65014	BRACKET	1						-

----> Old replace New
<---> Interchangeable
* Please place an order assy(*)
<---- New replace Old
<-O-> Interchangeable with another part(s)
<-X-> Not interchangeable

https://tractormanualz.com/

TC2-G465501

HYDRAULIC SYSTEM GROUP(1)

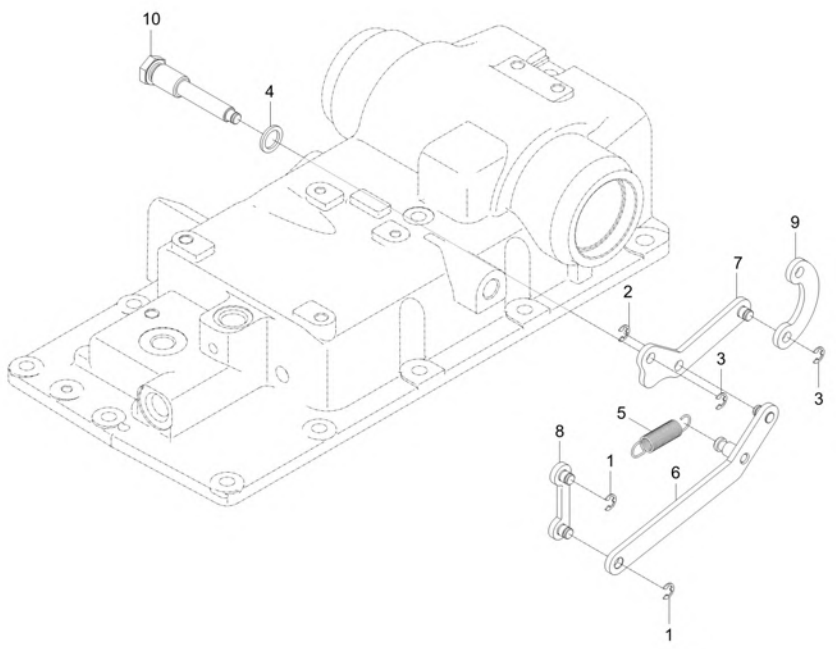

A : CK2610

No.	Part Number	Description	Qty A	Qty B	Qty C	Qty D	Qty E	I.C	Remark
1	04613-50060	RING SNAP	2						DIA06
2	04613-50060	RING SNAP	1						DIA06
3	04613-50060	RING SNAP	2						DIA06
4	04724-00140	PACKING	1						
5	T2305-26641	SPRING, DIFF.LOCK PEDAL	1						DIA1.2
6	T5710-32101	LINK	1						
7	T5710-32511	LINK	1						
8	T5710-32601	LINK	1						
9	T5710-37961	FEED BACK LINK	1						T4.5
10	T5855-43502	SHAFT,SET	1						

----> Old replace New
<---- New replace Old
<-X-> Not interchangeable
<---> Interchangeable
<-O-> Interchangeable with another part(s)
* Please place an order assy(*)

https://tractormanualz.com/

TC2-G466001

HYDRAULIC SYSTEM GROUP(2)

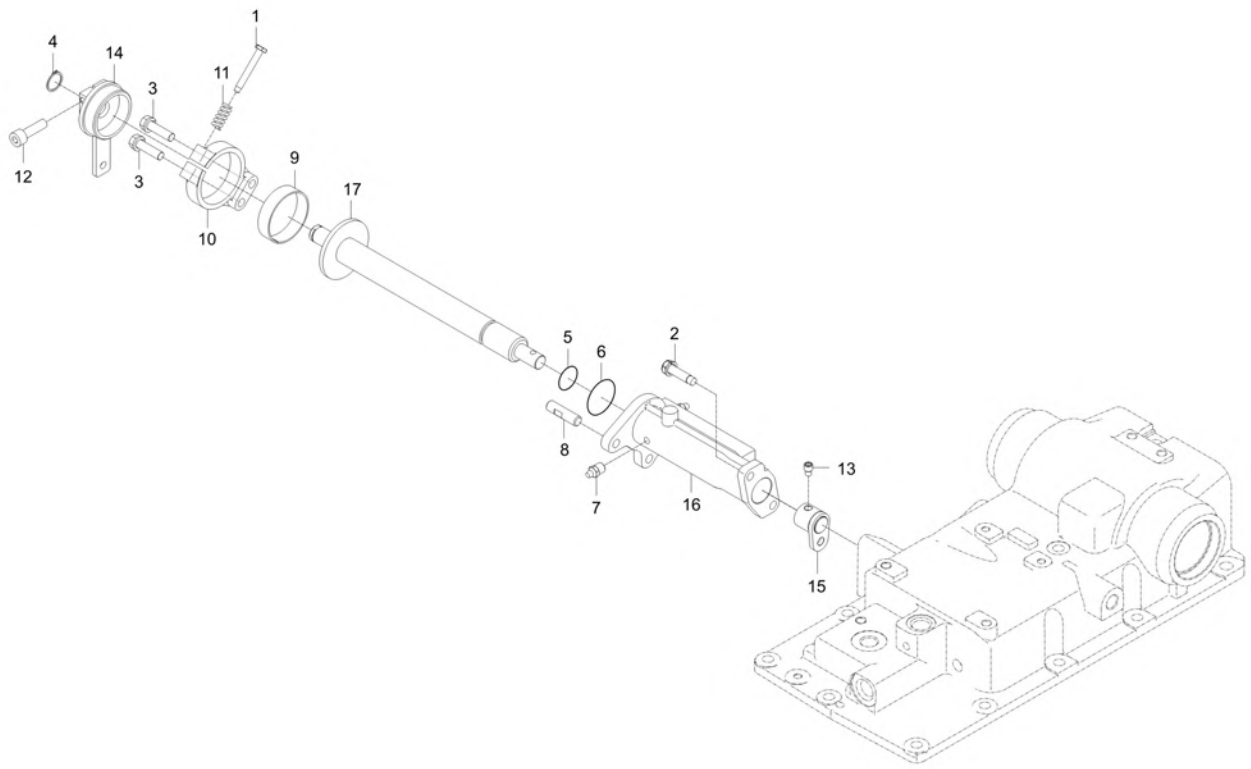

A : CK2610

No.	Part Number	Description	Qty A	Qty B	Qty C	Qty D	Qty E	I.C	Remark
1	01053-50645	BOLT v	1						
2	01123-50825	BOLT WITH WASHER	2						M8XP1.25
3	01123-50830	BOLT, WASHER v	2						M8P1.25*30
4	04612-00160	SNAP RING v	1						DIA16
5	04811-00210	O RING	1						DIA20.8
6	04811-00250	O RING	1						DIA24.7
7	06613-10010	NIPPLE, GREASE	1						PT1/8
8	T2165-39281	STOPPER	2						
9	T2610-39202	CLUTCH	1						
10	T2610-39212	HUB 1, CLUTCH	1						
11	T2610-39233	SPRING	1						DIA2.3
12	T2610-39252	BOLT	1						M8*1.25
13	T2610-39572	SCREW, SET	1						M8*P1.25
14	T5710-39202	LEVER	1						
15	T5710-39701	POSITION CONTROL LEVER ARM	1						
16	T5855-44003	HOLDER,LEVER	1						
17	T5855-44012	SHAFT	1						

----> Old replace New
<---- New replace Old
<-X-> Not interchangeable
<---> Interchangeable
<-O-> Interchangeable with another part(s)
* Please place an order assy(*)

https://tractormanualz.com/

TC2-G466501

AIR BREATHER GROUP

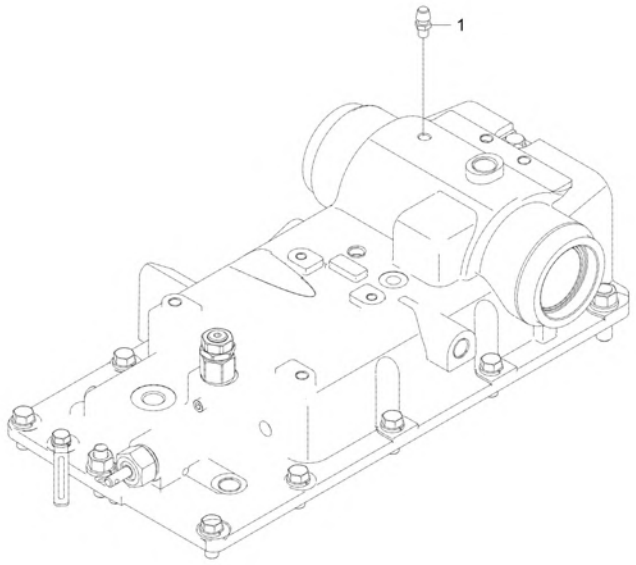

A : CK2610

No.	Part Number	Description	Qty A	Qty B	Qty C	Qty D	Qty E	I.C	Remark
1	TC24-0043A	AIR BREATHER	1						

----> Old replace New
<----> Interchangeable
* Please place an order assy(*)
<---- New replace Old
<-O-> Interchangeable with another part(s)
<-X-> Not interchangeable

https://tractormanualz.com/

TC2-G515024

START CONTROL GROUP

A : CK2610

No.	Part Number	Description	Qty A	Qty B	Qty C	Qty D	Qty E	I.C	Remark
1	T4930-69881	SWITCH, SAFETY STARTER	1						
2	T5520-75171	ASSY SWITCH, STARTER v	1						
3	T4837-77774	COVER, STARTER SWITCH PROOF WATER	1						
4	TC25-0122B	ASSY SAFETY CONTROL UNIT	1						
5	01754-50610	BOLT, FLANGE	2						M6XP1.0
6	TG35-0136A	ASSY SENSOR, STROKE	1						
7	03054-50408	BOLT,SCREW	2						M4XP0.7

----> Old replace New
<----> Interchangeable
* Please place an order assy(*)
<---- New replace Old
<-O-> Interchangeable with another part(s)
<-X-> Not interchangeable

https://tractormanualz.com/

TC2-G512001

ENGINE ELECTRICAL GROUP(3)

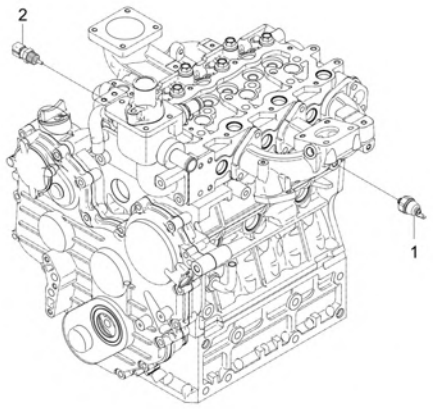

A : CK2610

No.	Part Number	Description	Qty A	Qty B	Qty C	Qty D	Qty E	I.C	Remark
1	E5500-39013	OIL SWITCH	1						
2	E7240-32731	TEMPERATURE SENSOR ASSY	1						

----> Old replace New
<---- New replace Old
<-X-> Not interchangeable
<---> Interchangeable
<-O-> Interchangeable with another part(s)
* Please place an order assy(*)

https://tractormanualz.com/

TC2-G512501

ENGINE ELECTRICAL GROUP(4)

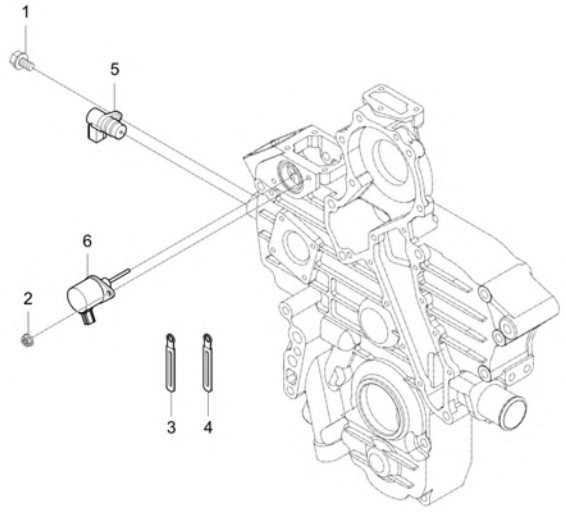

A : CK2610

No.	Part Number	Description	Qty A	Qty B	Qty C	Qty D	Qty E	I.C	Remark
1	01754-50612	BOLT, FLANGE	1						M6XP1.0
2	02761-50060	NUT, FLANGE	2						M6XP1.0
3	37150-3447-1	WIR'G CLAMP	1						T0.5
4	37150-3447-1	WIR'G CLAMP	1						T0.5
5	E6302-04931	PICK UP SENSOR	1						
6	E6820-60011	GROUP, ENGINE STOP SOLENOIDE v	1						

----> Old replace New
<----> Interchangeable
* Please place an order assy(*)
<---- New replace Old
<-O-> Interchangeable with another part(s)
<-X-> Not interchangeable

https://tractormanualz.com/

TC2-G513001

STARTER MOTOR GROUP

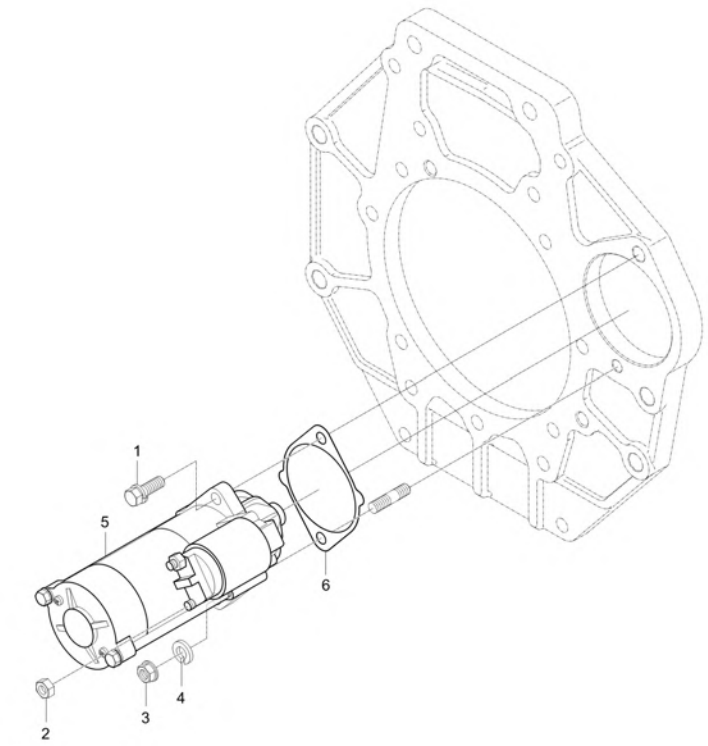

A : CK2610

No.	Part Number	Description	Qty A	Qty B	Qty C	Qty D	Qty E	I.C	Remark
1	01133-51045	BOLT	1						
2	02176-50100	NUT v	1						M10XP1.25
3	02763-50080	FLANGE NUT	1						M8XP1.25
4	04512-50100	SPRING WASHER	1						M10
5	E5500-63016	ASSY, STARTER MOTOR sp v	1						
6	E6200-04623	GASKET v	1						T0.5

----> Old replace New
<----> Interchangeable
* Please place an order assy(*)
<---- New replace Old
<-O-> Interchangeable with another part(s)
<-X-> Not interchangeable

https://tractormanualz.com/

TC2-G513002

STARTER MOTOR GROUP

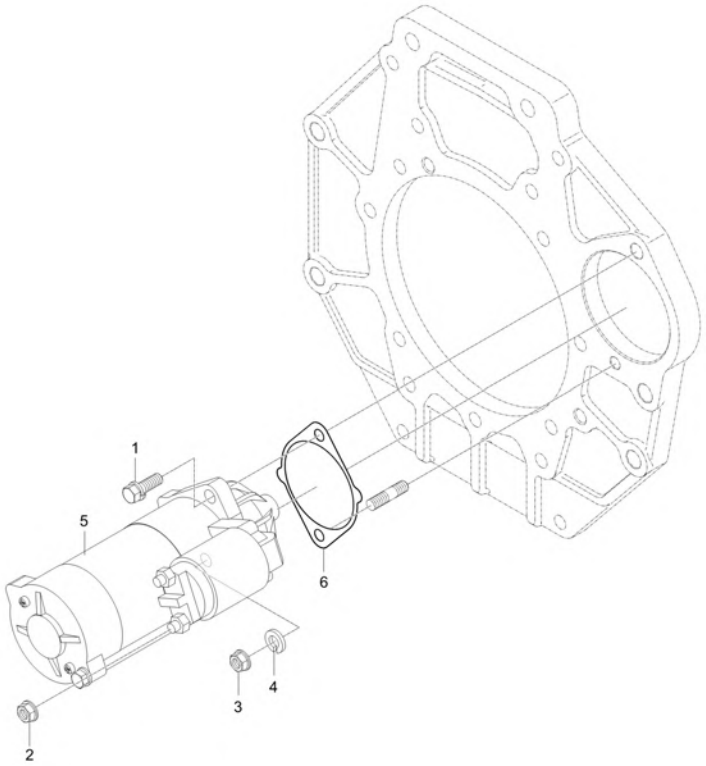

A : CK2610

No.	Part Number	Description	Qty A	Qty B	Qty C	Qty D	Qty E	I.C	Remark
1	E6864-63011	ASSY STARTER	1						12V 1.7KW
2	E6200-04623	GASKET v	1						T0.5
3	01133-51050	BOLT	1						
4	04512-50100	SPRING WASHER	1						M10
5	02176-50100	NUT v	1						M10XP1.25
6	02763-50080	FLANGE NUT	1						M8XP1.25

----> Old replace New
<----> Interchangeable
* Please place an order assy(*)
<---- New replace Old
<-O-> Interchangeable with another part(s)
<-X-> Not interchangeable

https://tractormanualz.com/

TC2-G513501

BATTERY GROUP

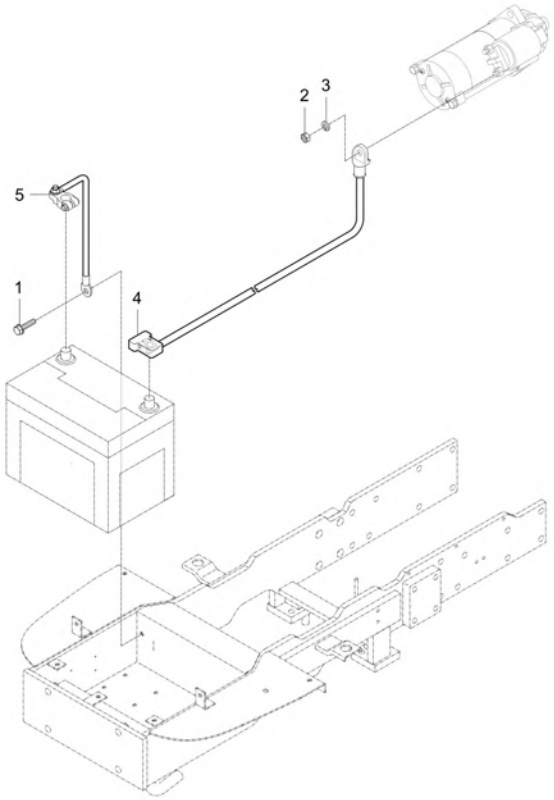

A : CK2610

No.	Part Number	Description	Qty A	Qty B	Qty C	Qty D	Qty E	I.C	Remark
1	01754-50812	BOLT, FLANGE	1						M8XP1.25
2	02156-50080	NUT v	1						M8XP1.25
3	04512-50080	SPRING WASHER	1						M08
4	T5855-69162	CABLE, BATTERY	1						
5	T5855-69612	CABLE, BATTERY EARTH	1						

----> Old replace New
<----> Interchangeable
* Please place an order assy(*)
<---- New replace Old
<-O-> Interchangeable with another part(s)
<-X-> Not interchangeable

https://tractormanualz.com/

TC2-G514002

ALTERNATOR GROUP

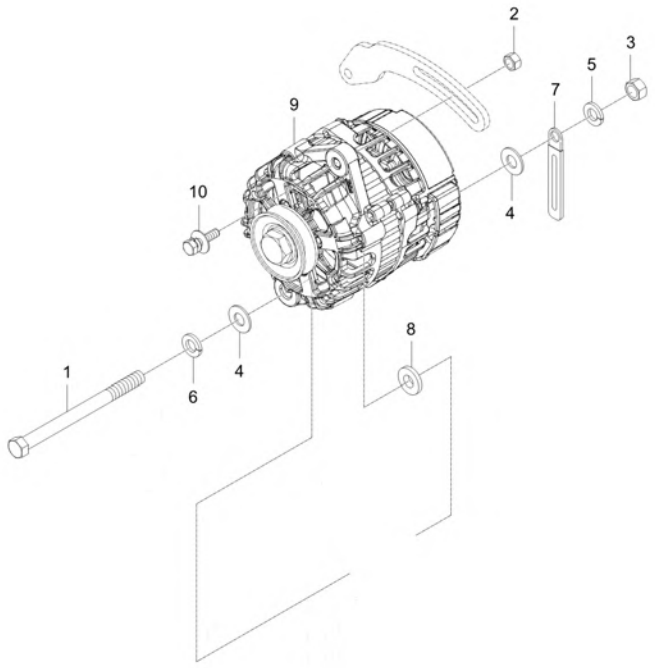

A : CK2610

No.	Part Number	Description	Qty A	Qty B	Qty C	Qty D	Qty E	I.C	Remark
1	01774-51003	FLANGE_BOLT	1						M10XP1.25
2	02156-50080	NUT v	1						M8XP1.25
3	02176-50100	NUT v	1						M10XP1.25
4	04013-50100	PLAIN WASHER	2						M10
5	04512-50080	SPRING WASHER	1						M08
6	04512-50100	SPRING WASHER	1						M10
7	37155-3447-1	CLAMP,CORD	1						-
8	E5800-64102	SPACER	1						DIA24*T5.15
9	E7251-64011	ALTERNATOR ASSY 75AMP v	1						
9	E7251-64012	ALTERNATOR 75A	1					<------	
10	01127-50825	BOLT	1						M8XP1.25

----> Old replace New
<---- New replace Old
<-X-> Not interchangeable
<---> Interchangeable
<-O-> Interchangeable with another part(s)
* Please place an order assy(*)

https://tractormanualz.com/

TC2-G514504

GLOW CONTROL GROUP

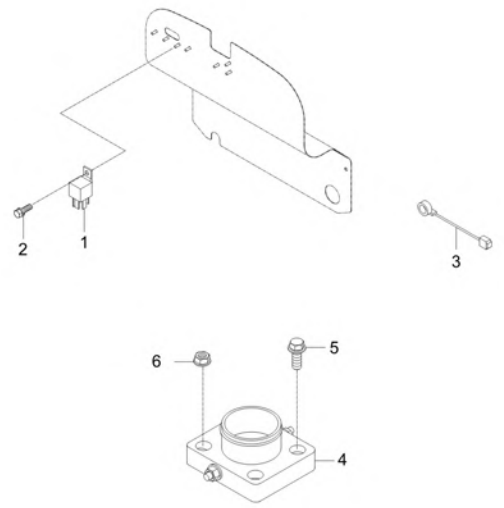

A : CK2610

No.	Part Number	Description	Qty A	Qty B	Qty C	Qty D	Qty E	I.C	Remark
1	T5535-69951	RELAY 4P v	2						
2	01754-50610	BOLT, FLANGE	2						M6XP1.0
3	T2198-69471	HARNESS WIRE 3, CABLE	1						
4	TB15-0007A	ASSY UNIT, HEATER	1						
5	01754-50835	BOLT v	2						M8XP1.25
6	02763-50080	FLANGE NUT	2						M8XP1.25

----> Old replace New
<---- New replace Old
<-X-> Not interchangeable
<---> Interchangeable
<-O-> Interchangeable with another part(s)
* Please place an order assy(*)

https://tractormanualz.com/

TC2-G515013

START CONTROL GROUP

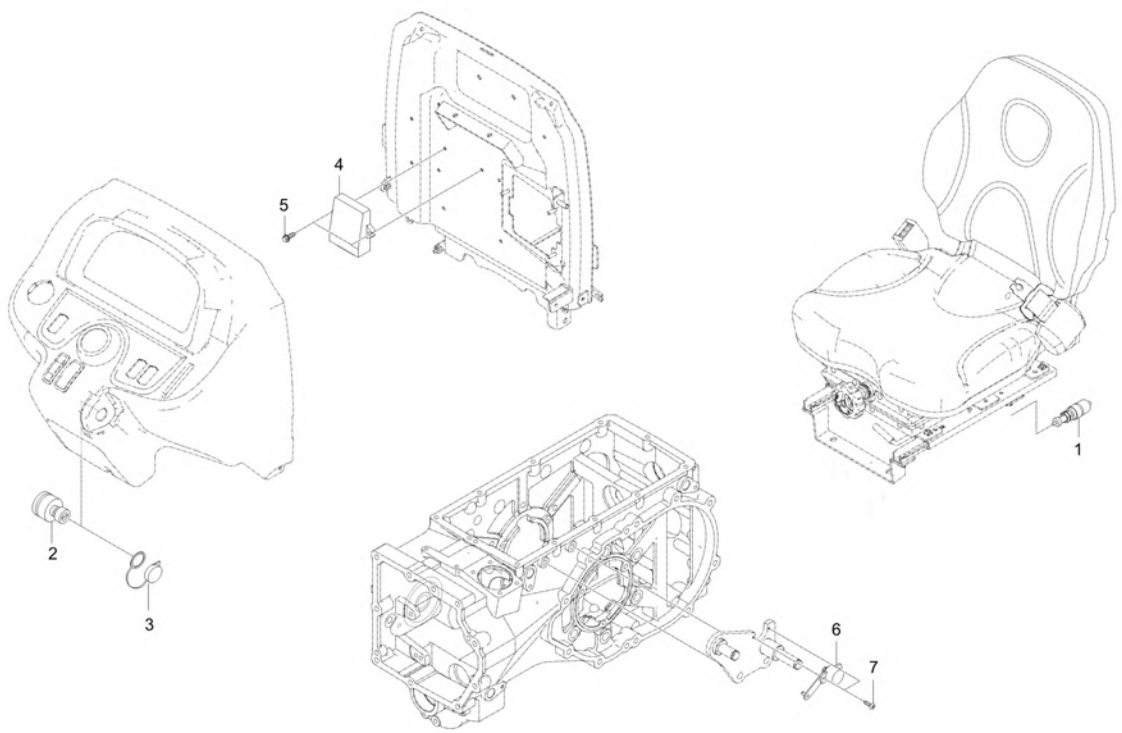

A : CK2610

No.	Part Number	Description	Qty A	Qty B	Qty C	Qty D	Qty E	I.C	Remark
1	T4930-69881	SWITCH, SAFETY STARTER	1						
2	T5520-75171	ASSY SWITCH, STARTER v	1						
3	T4837-77774	COVER, STARTER SWITCH PROOF WATER	1						
4	TC25-0122B	ASSY SAFETY CONTROL UNIT	1						
5	01754-50610	BOLT, FLANGE	2						M6XP1.0
6	T4682-32231	ASS'Y STROKE SENSOR	1						
7	03054-50408	BOLT,SCREW	2						M4XP0.7

----> Old replace New
<---- New replace Old
<-X-> Not interchangeable
<---> Interchangeable
<-O-> Interchangeable with another part(s)
* Please place an order assy(*)

https://tractormanualz.com/

TC2-G522001

TURN SIGNAL LAMP GROUP

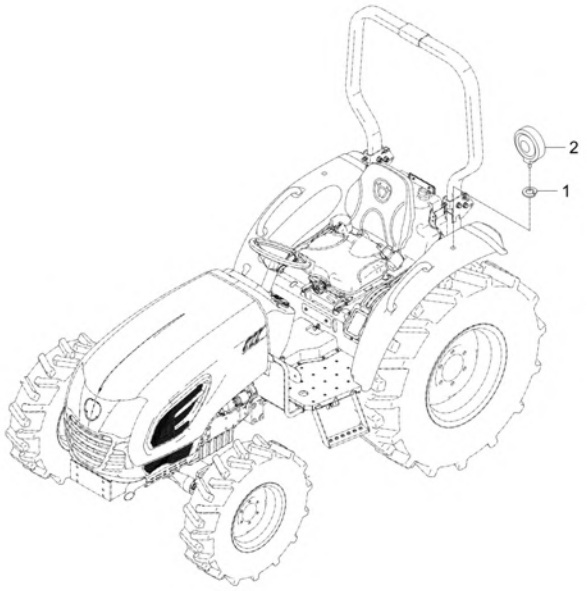

A : CK2610

No.	Part Number	Description	Qty A	Qty B	Qty C	Qty D	Qty E	I.C	Remark
1	04512-50100	SPRING WASHER	4						M10
2	T5855-69061	LAMP,HAZARD	2						

----> Old replace New
<----> Interchangeable
* Please place an order assy(*)
<---- New replace Old
<-O-> Interchangeable with another part(s)
<-X-> Not interchangeable

https://tractormanualz.com/

TC2-G522002

TURN SIGNAL LAMP GROUP

(CK2610 : TL9400101 ~)

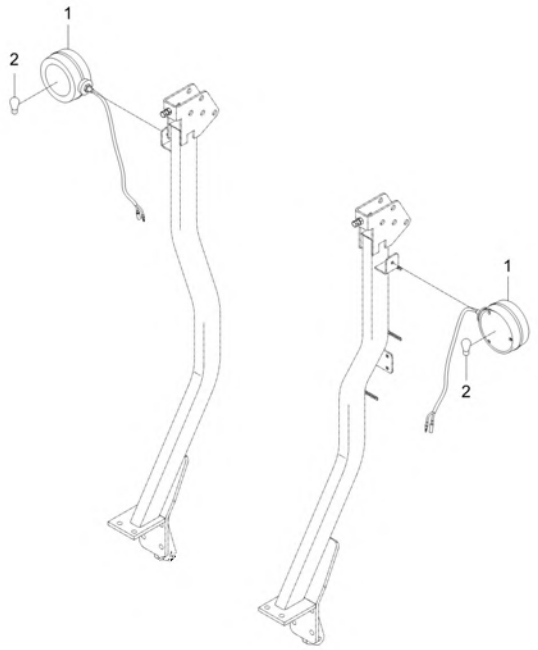

A : CK2610

No.	Part Number	Description	Qty A	Qty B	Qty C	Qty D	Qty E	I.C	Remark
1	TB25-0009A	ASSY LAMP, TURN SIGNAL	2						
2	TB25-0010A	BULB-27W	1						

----> Old replace New
<----> Interchangeable
* Please place an order assy(*)
<---- New replace Old
<-O-> Interchangeable with another part(s)
<-X-> Not interchangeable

https://tractormanualz.com/

TC2-G522501 REAR COMBINATION LAMP GROUP

(CK2610 : ~ TL9400100)

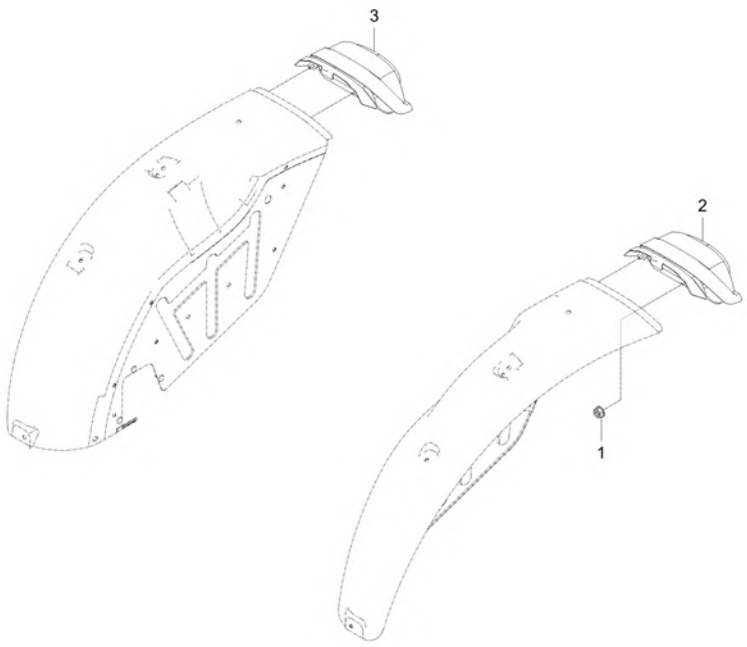

A : CK2610

No.	Part Number	Description	Qty A	Qty B	Qty C	Qty D	Qty E	I.C	Remark
1	02761-50060	NUT, FLANGE	8						M6XP1.0
2	T5855-69711	ASSY TAIL LAMP LEFT dnr v	1						
2	T5855-69712	ASSY TAIL LAMP(LEFT)	1					<------	
2	T5855-69713	ASSY TAIL LAMP LEFT v	1					<------	
3	T5855-69721	ASS'Y TAIL LAMP RIGHT dnr v	1						
3	T5855-69722	ASSY TAIL LAMP(RIGHT)	1					<------	
3	T5855-69723	ASSY TAIL LAMP RH	1					<------	

----> Old replace New <---- New replace Old <-X-> Not interchangeable
<---> Interchangeable <-O-> Interchangeable with another part(s)
* Please place an order assy(*)

https://tractormanualz.com/

TC2-G522502 REAR COMBINATION LAMP GROUP

(CK2610 : TL9400101 ~)

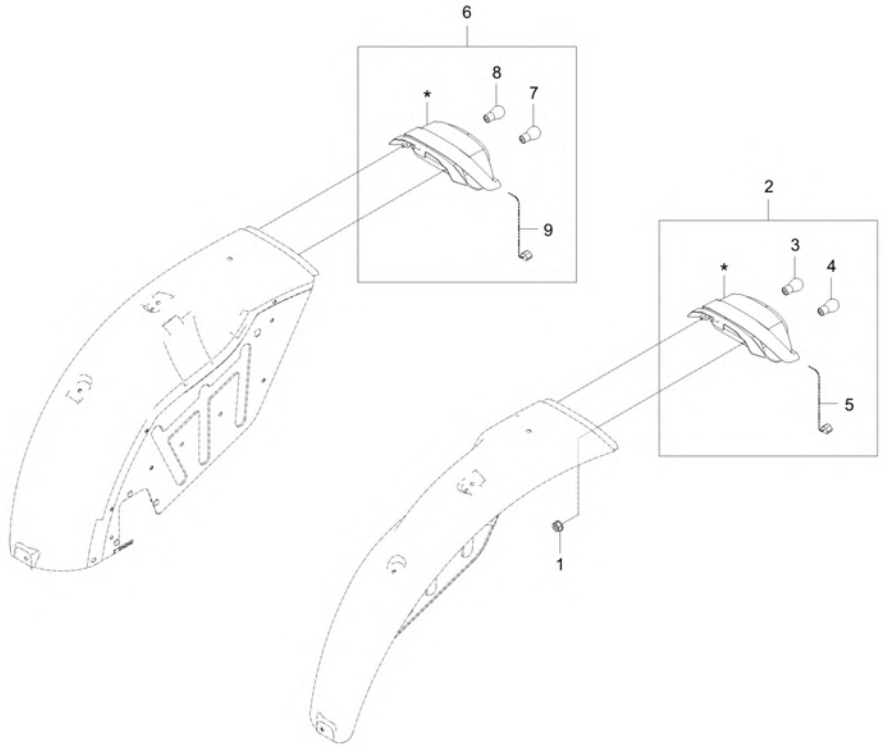

A : CK2610

No.	Part Number	Description	Qty A	Qty B	Qty C	Qty D	Qty E	I.C	Remark
1	02761-50060	NUT, FLANGE	8						M6XP1.0
2	TC25-0080A	ASSY REAR, COMBINATION LAMP LH	1						
3	T5210-69741	BULB	1						
4	T2185-79061	BULB v	1						
5	T5710-69711003	WIRE, CONNECTION	1						
6	TC25-0081A	ASSY REAR, COMBINATION LAMP-RH	1						
7	T5210-69741	BULB	1						
8	T2185-79061	BULB v	1						
9	T5710-69711003	WIRE, CONNECTION	1						

----> Old replace New <---- New replace Old <-X-> Not interchangeable
<---> Interchangeable <-O-> Interchangeable with another part(s)
* Please place an order assy(*)

https://tractormanualz.com/

TC2-G524004

REFLECTOR GROUP

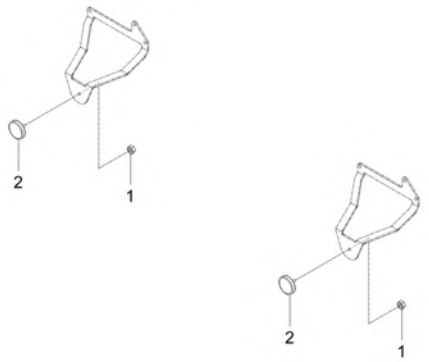

A : CK2610

No.	Part Number	Description	Qty A	Qty B	Qty C	Qty D	Qty E	I.C	Remark
1	02761-50050	NUT, FLANGE	2						M5XP0.8
2	T5638-85721	ASS'Y REFLECTOR dnr v	2						

----> Old replace New
<----> Interchangeable
* Please place an order assy(*)
<---- New replace Old
<-O-> Interchangeable with another part(s)
<-X-> Not interchangeable

https://tractormanualz.com/

TC2-G525003

LIGHT CONTROL GROUP

(CK2610 : TL9400101 ~)

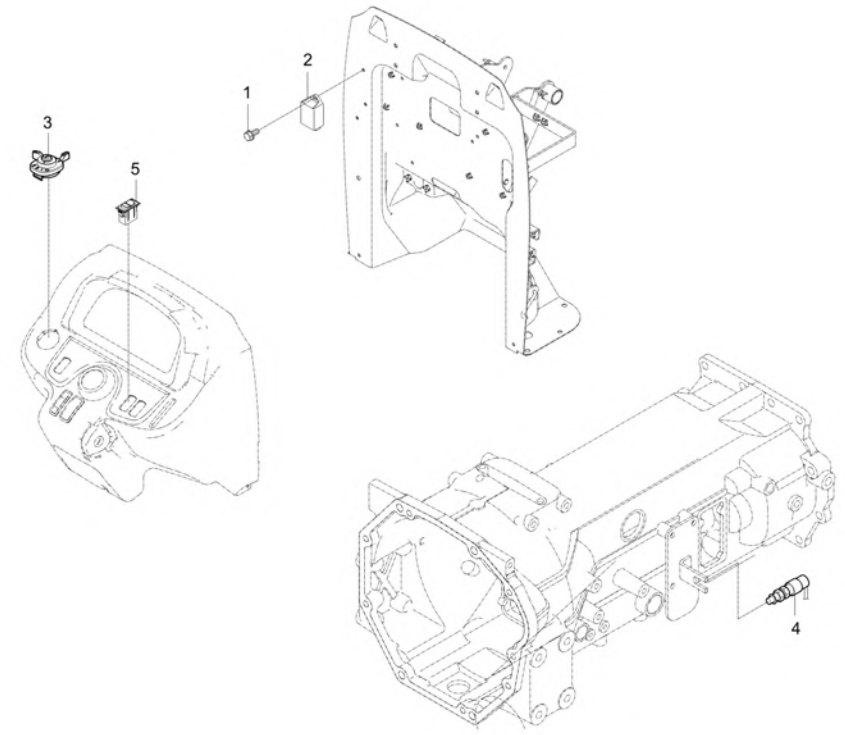

A : CK2610

No.	Part Number	Description	Qty A	Qty B	Qty C	Qty D	Qty E	I.C	Remark
1	01754-50610	BOLT, FLANGE	1						M6XP1.0
2	T2198-31052	FLASH UNIT	1						
3	T2555-69023	ASS'Y COMBINATION SWITCH v	1						
4	C7110-42862	SWITCH	1						
5	T4025-68351	SWITCH, EMERGENCY LAMP	1						

----> Old replace New
<---- New replace Old
<-X-> Not interchangeable
<---> Interchangeable
<-O-> Interchangeable with another part(s)
* Please place an order assy(*)

https://tractormanualz.com/

TC2-G532502

HEAD LAMP WIRE HARNESS GROUP

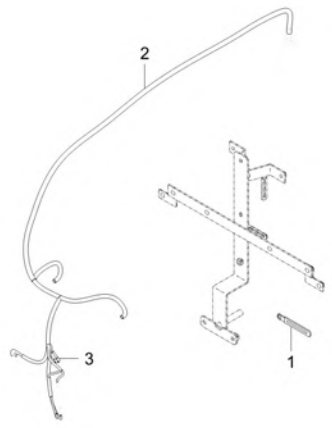

A : CK2610

No.	Part Number	Description	Qty A	Qty B	Qty C	Qty D	Qty E	I.C	Remark
1	37150-3447-1	WIR'G CLAMP	3						T0.5
2	T5755-69391	ASS'Y WIRE HARNESS HEAD LAMP	1						
3	T4620-69331	DIODE 2P	1						800V,3.0A

----> Old replace New
<---> Interchangeable
* Please place an order assy(*)
<---- New replace Old
<-O-> Interchangeable with another part(s)
<-X-> Not interchangeable

https://tractormanualz.com/

TC2-G533024

DISPLAY CONTROL GROUP

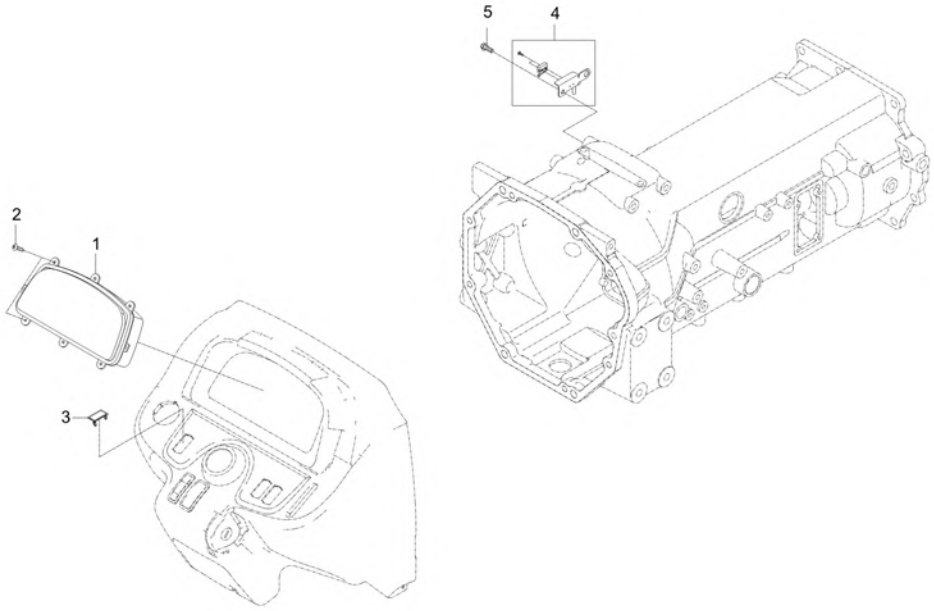

A : CK2610

No.	Part Number	Description	Qty A	Qty B	Qty C	Qty D	Qty E	I.C	Remark
1	TC25-0059C	ASSY PANEL, INSTRUMENT v	1						
2	38240-1883-1	TAPPING SCREW dnr v	6						M4X16
3	T4025-68301	COVER	2						
4	T5810-68812	SWITCH, PARKING BRAKE	1						
5	01754-50816	BOLT, FLANGE	2						M8XP1.25

----> Old replace New
<---- New replace Old
<-X-> Not interchangeable
<---> Interchangeable
<-O-> Interchangeable with another part(s)
* Please place an order assy(*)

https://tractormanualz.com/

TC2-G533501

FUEL SENDER GROUP

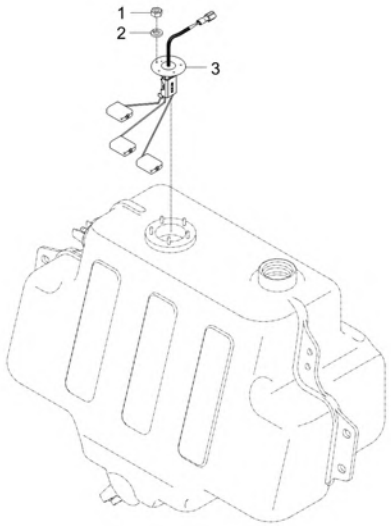

A : CK2610

No.	Part Number	Description	Qty A	Qty B	Qty C	Qty D	Qty E	I.C	Remark
1	02054-50040	NUT	5						M4XP0.7
2	04512-50040	WASHER, SPRING	5						M04
3	T5855-69212	UNIT,FUEL dnr v	1 ~ UL9400040						
3	TC25-0103A	ASSY SENDER, FUEL	1 UL9400041 ~ UL9400096					<----->	
3	TC25-0103B	ASSY SENDER, FUEL	1					<------	
3	TC25-0103C	ASSY SENDER, FUEL v	1 UL9400097 ~ WL9400080					<------	

----> Old replace New
<---- New replace Old
<-X-> Not interchangeable
<---> Interchangeable
<-O-> Interchangeable with another part(s)
* Please place an order assy(*)

https://tractormanualz.com/

TC2-G534003

PTO CONTROL GROUP

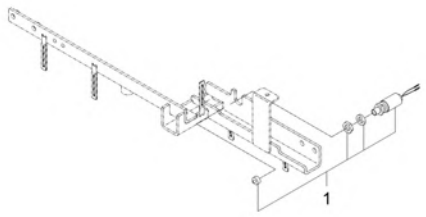

A : CK2610

No.	Part Number	Description	Qty A	Qty B	Qty C	Qty D	Qty E	I.C	Remark
1	T4930-69881	SWITCH, SAFETY STARTER	1						

----> Old replace New
<----> Interchangeable
* Please place an order assy(*)
<---- New replace Old
<-O-> Interchangeable with another part(s)
<-X-> Not interchangeable

https://tractormanualz.com/

TC2-G534501

HORN GROUP

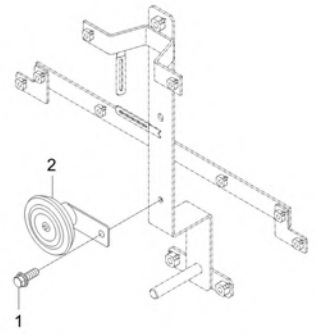

A : CK2610

No.	Part Number	Description	Qty A	Qty B	Qty C	Qty D	Qty E	I.C	Remark
1	01123-50820	BOLT, WASHER v	1						M8XP1.25
1	01023-50616	BOLT, WASHER	1					<------	M6XP1.0
2	T4144-75952	ASSY HORN	1						70파이, 420Hz, 110

----> Old replace New
<---> Interchangeable
* Please place an order assy(*)
<---- New replace Old
<-O-> Interchangeable with another part(s)
<-X-> Not interchangeable

https://tractormanualz.com/

TC2-G514503

GLOW CONTROL GROUP

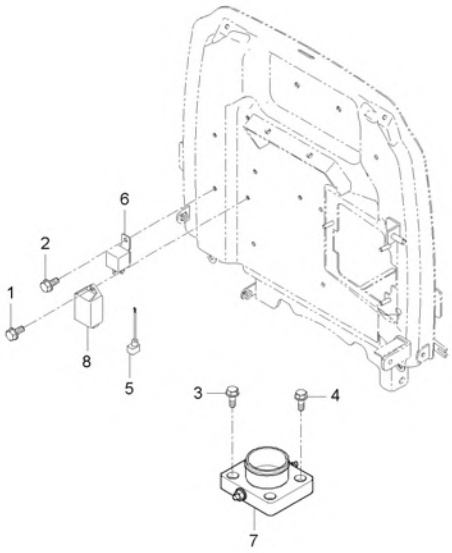

A : CK2610

No.	Part Number	Description	Qty A	Qty B	Qty C	Qty D	Qty E	I.C	Remark
1	01754-50610	BOLT, FLANGE	2						M6XP1.0
2	01754-50610	BOLT, FLANGE	1						M6XP1.0
3	01754-50835	BOLT v	2						M8XP1.25
4	02763-50080	FLANGE NUT	2						M8XP1.25
5	T2198-69471	HARNESS WIRE 3, CABLE	1						
6	T5535-69951	RELAY 4P v	2						
7	TB15-0007A	ASSY UNIT, HEATER	1						
8	TC25-0002B	CONTROLLER, PREHEATING	1						

----> Old replace New
<---- New replace Old
<-X-> Not interchangeable
<---> Interchangeable
<-O-> Interchangeable with another part(s)
* Please place an order assy(*)

https://tractormanualz.com/

TC2-G521001

HEAD LIGHT GROUP

(CK2610 : TL9400101 ~)

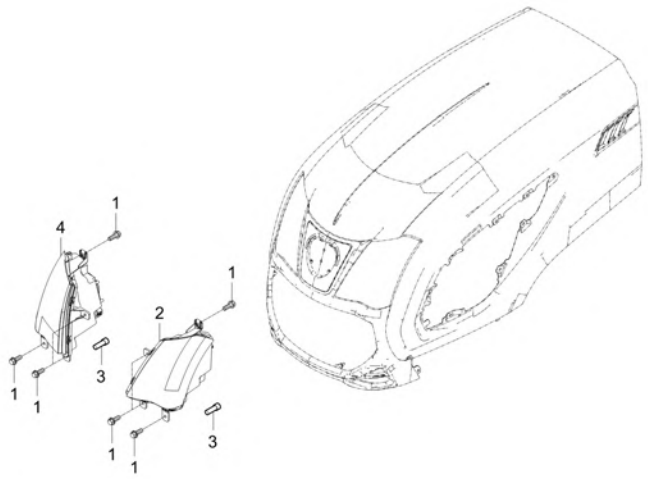

A : CK2610

No.	Part Number	Description	Qty A	Qty B	Qty C	Qty D	Qty E	I.C	Remark
1	01754-50616	BOLT, FLANGE v	8						M6XP1.0
2	T5710-69512	ASSY LAMP,HEAD LH	1						
2	T5710-69513	HEAD LAMP ASSY LH	1 TL9400101 ~ WL9400080					<------	
3	T2555-69571	BULB	1						H7 12V 55W
4	T5710-69522	ASSY LAMP,HEAD RH	1						
4	T5710-69523	HEAD LAMP ASSY RH	1 TL9400101 ~ WL9400080					<------	

----> Old replace New
<---> Interchangeable
* Please place an order assy(*)
<---- New replace Old
<-O-> Interchangeable with another part(s)
<-X-> Not interchangeable

https://tractormanualz.com/

TC2-G521002

HEAD LIGHT GROUP

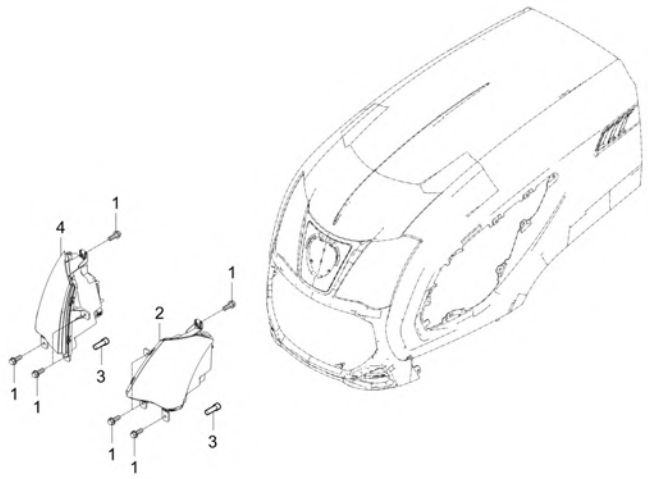

A : CK2610

No.	Part Number	Description	Qty A	Qty B	Qty C	Qty D	Qty E	I.C	Remark
1	01754-50616	BOLT, FLANGE v	8						M6XP1.0
2	T5755-69512	ASSY LAMP,HEAD LH	1						
3	T5755-69571	BULB,LIGHT 27W	1						
4	T5755-69522	ASSY LAMP,HEAD RH	1						

----> Old replace New
<---- New replace Old
<-X-> Not interchangeable
<---> Interchangeable
<-O-> Interchangeable with another part(s)
* Please place an order assy(*)

https://tractormanualz.com/

TC2-G531016

WIRE HARNESS GROUP

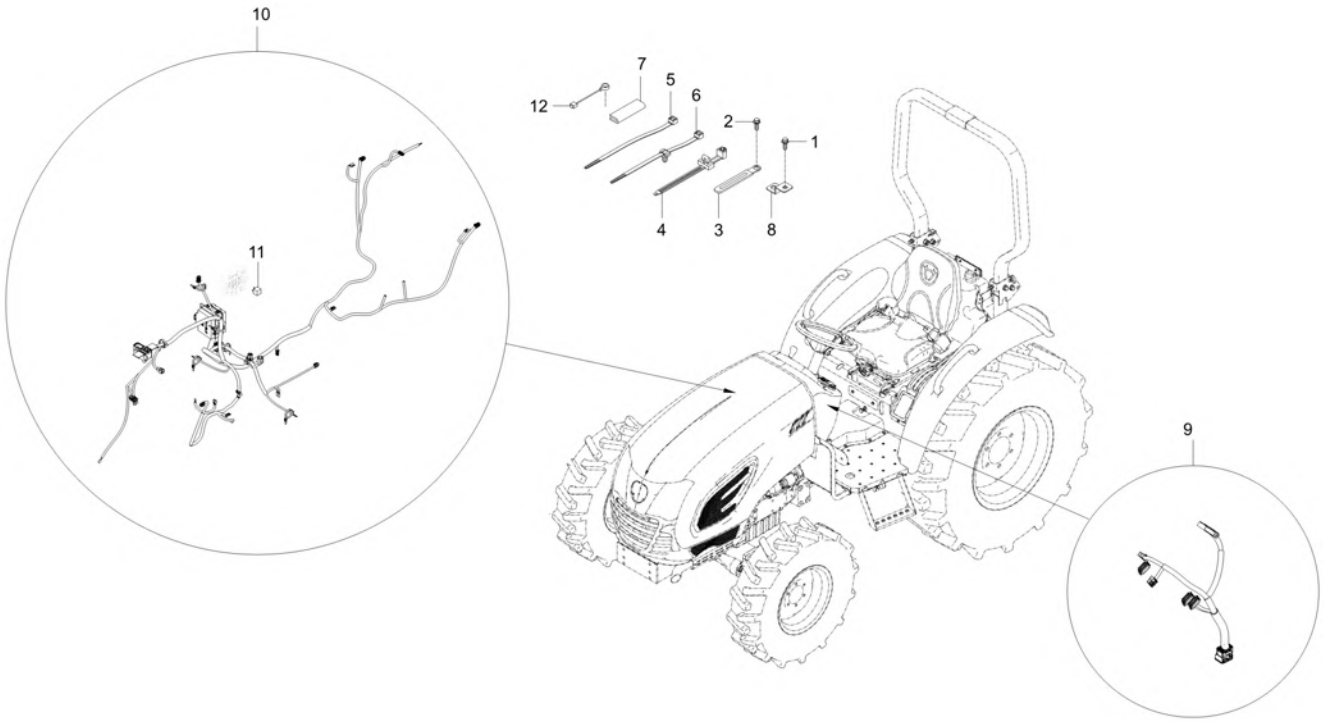

A : CK2610

No.	Part Number	Description	Qty A	Qty B	Qty C	Qty D	Qty E	I.C	Remark
1	01754-50610	BOLT, FLANGE	2						M6XP1.0
2	01754-50620	BOLT, FLANGE	2						M6XP1.0
3	37150-3447-1	WIR'G CLAMP	3						T0.5
4	P5370-82551	BAND, CABLE	1						
5	T2185-82551	CABLE TIE, BLACK / 300	1						L290
6	T2198-82571	BAND CABLE	1						
7	T5230-80441	U-SHAPED RUBBER	1 RL9400001 ~ VL9400206						
7	TC26-1739A	RUBBER-U	1 VL9400207 ~ WL9400080					<------	
8	T5250-68771	BRACKET	2						t1.6
9	T5857-69422	ASSY HARNESS	1 ~ TL9400100						
9	TC25-0078A	WIRE HARNESS, PANEL	1 TL9400101 ~ VL9400230					<--X-->	
9	TC25-0078B	ASSY WIRE HARNESS, PANEL	1					<----->	
10	TC25-0001B	ASSY WIRE HARNESS, MAIN	1 RL9400003 ~ TL9400100						
10	TC25-0001C	WIRE HARNESS, MAIN v	1 TL9400101 ~ TL9400132					<--X-->	
10	TC25-0001D	WIRE HARNESS, MAIN v	1 TL9400133 ~ VL9400230					<------	
10	TC25-0001E	ASSY WIRE HARNESS, MAIN	1					<--X-->	
11	T4684-31052	UNIT, FLASHER	1						
12	T4620-69521	WIRE HARNESS 4	1						

----> Old replace New
<---> Interchangeable
* Please place an order assy(*)
<---- New replace Old
<-O-> Interchangeable with another part(s)
<-X-> Not interchangeable

https://tractormanualz.com/

TC2-G532501 HEAD LAMP WIRE HARNESS GROUP

(CK2610 : TL9400101 ~)

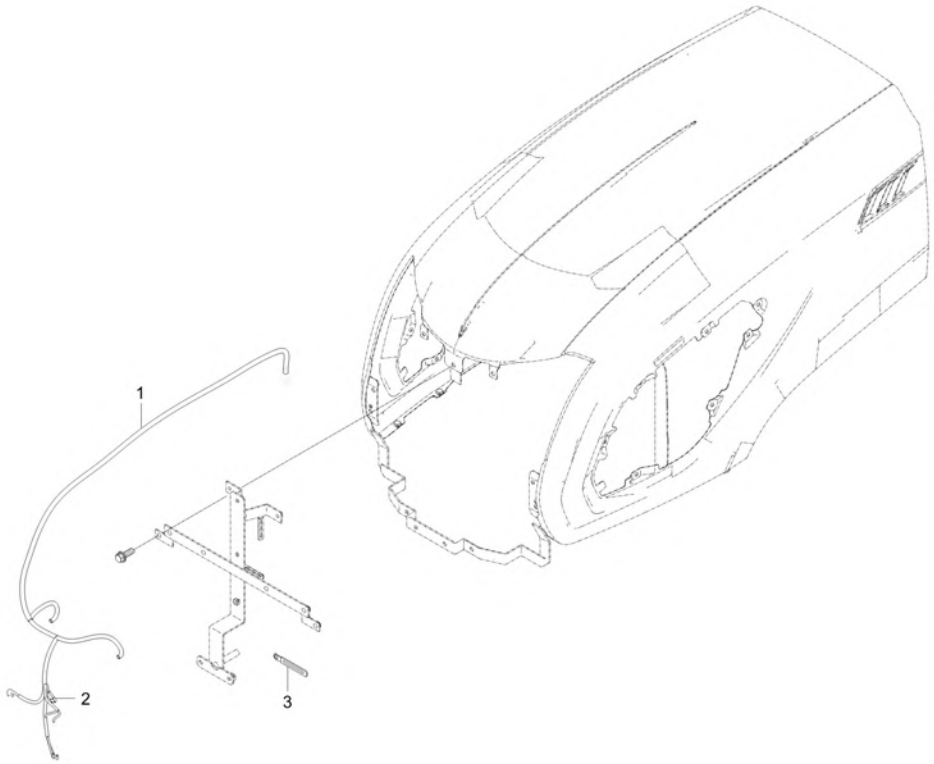

A : CK2610

No.	Part Number	Description	Qty A	Qty B	Qty C	Qty D	Qty E	I.C	Remark
1	37150-3447-1	WIR'G CLAMP	3						T0.5
2	T5710-69391	ASS'Y WIRE HARNESS HEAD LAMP	1						
3	T4620-69331	DIODE 2P	1						800V,3.0A

----> Old replace New
<----> Interchangeable
* Please place an order assy(*)
<---- New replace Old
<-O-> Interchangeable with another part(s)
<-X-> Not interchangeable

https://tractormanualz.com/

TC2-G533003

DISPLAY CONTROL GROUP

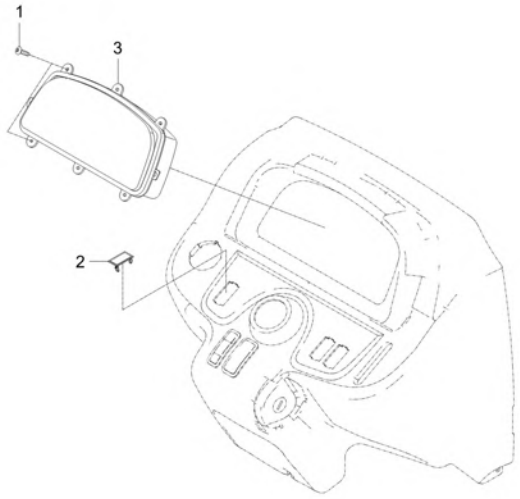

A : CK2610

No.	Part Number	Description	Qty A	Qty B	Qty C	Qty D	Qty E	I.C	Remark
1	38240-1883-1	TAPPING SCREW dnr v	6						M4X16
2	T4025-68301	COVER	2						
3	T5757-69013	ASSY PLATE, METER dnr v	1						
3	T5757-69014	ASSY PLATE, METER dnr v	1					<------	
3	TC25-0061A	ASSY PANEL, INSTRUMENT-TIER3	1					<------	
3	TC25-0061B	ASSY PANEL, INSTRUMENT-TIER3	1					<------	
3	TC25-0061C	ASSY PANEL, INSTRUMENT-TIER3	1					<------	

----> Old replace New
<---- New replace Old
<-X-> Not interchangeable
<---> Interchangeable
<-O-> Interchangeable with another part(s)
* Please place an order assy(*)

https://tractormanualz.com/

TC2-G533018

DISPLAY CONTROL GROUP

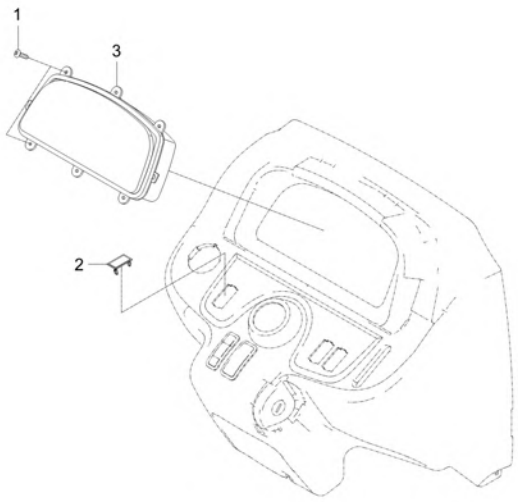

A : CK2610

No.	Part Number	Description	Qty A	Qty B	Qty C	Qty D	Qty E	I.C	Remark
1	38240-1883-1	TAPPING SCREW dnr v	6						M4X16
2	T4025-68301	COVER	2						
3	TC25-0059A	ASSY PANEL, INSTRUMENT dnr v	1						
3	TC25-0059B	ASSY PANEL, INSTRUMENT	1					<------	
3	TC25-0059C	ASSY PANEL, INSTRUMENT v	1					<------	

----> Old replace New
<---- New replace Old
<-X-> Not interchangeable
<---> Interchangeable
<-O-> Interchangeable with another part(s)
* Please place an order assy(*)

https://tractormanualz.com/

TC2-G6D1019

LABEL(BONNET COVER) GROUP

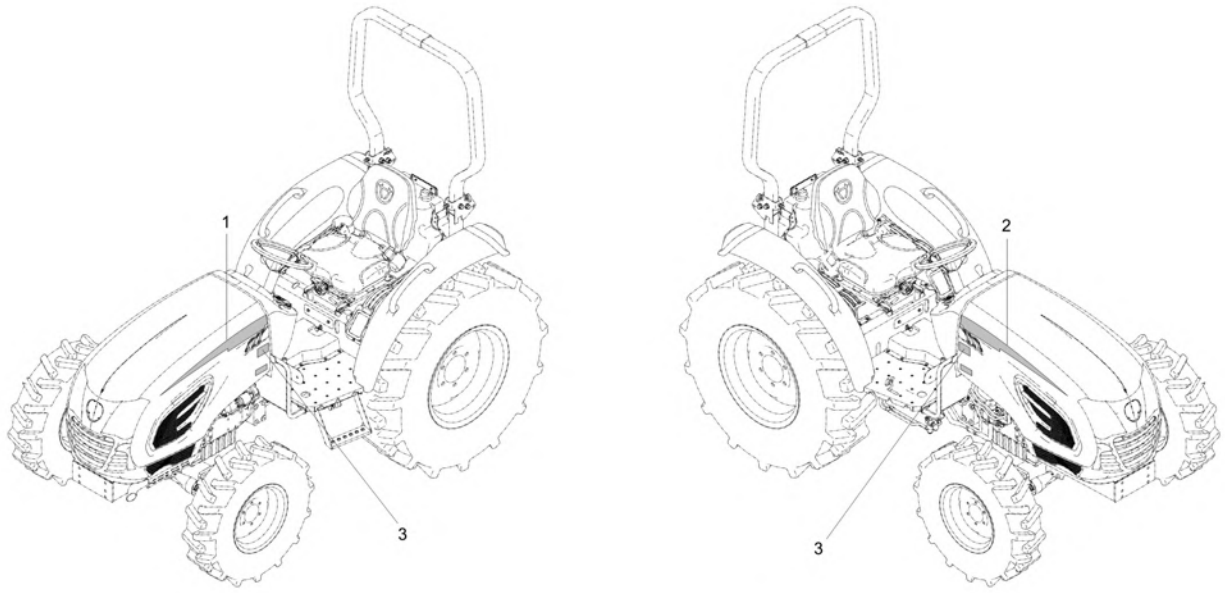

A : CK2610

No.	Part Number	Description	Qty A	Qty B	Qty C	Qty D	Qty E	I.C	Remark
1	T5715-55411	BRAND LABEL, LH	1						
2	T5715-55431	BRAND LABEL, RH	1						
3	TB16-0003A	LABEL MODEL -CK2610	2						

----> Old replace New
<----> Interchangeable
* Please place an order assy(*)
<---- New replace Old
<-O-> Interchangeable with another part(s)
<-X-> Not interchangeable

https://tractormanualz.com/

TC2-G6D2002

LABEL(MFG CERTIFICATE) GROUP

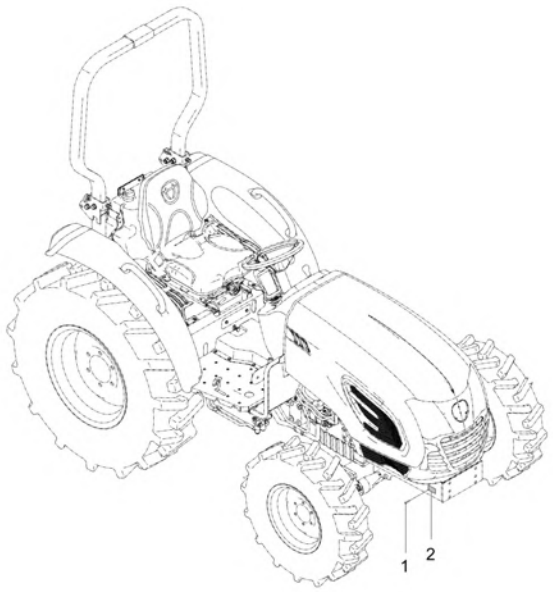

A : CK2610

No.	Part Number	Description	Qty A	Qty B	Qty C	Qty D	Qty E	I.C	Remark
1	05624-20408	RIVET	4						
2	T4935-52011	NAME PLATE	1						T0.5
3	TC26-1563A	LABEL, CERTIFICATE ROPS-ASAE S478	1						
3	TC26-1563B	LABEL, CERTIFICATE ROPS-ASAE S478	1					<------	

----> Old replace New
<---> Interchangeable
* Please place an order assy(*)
<---- New replace Old
<-O-> Interchangeable with another part(s)
<-X-> Not interchangeable

https://tractormanualz.com/

TC2-G6D3007

LABEL(MAIN/ETC) GROUP

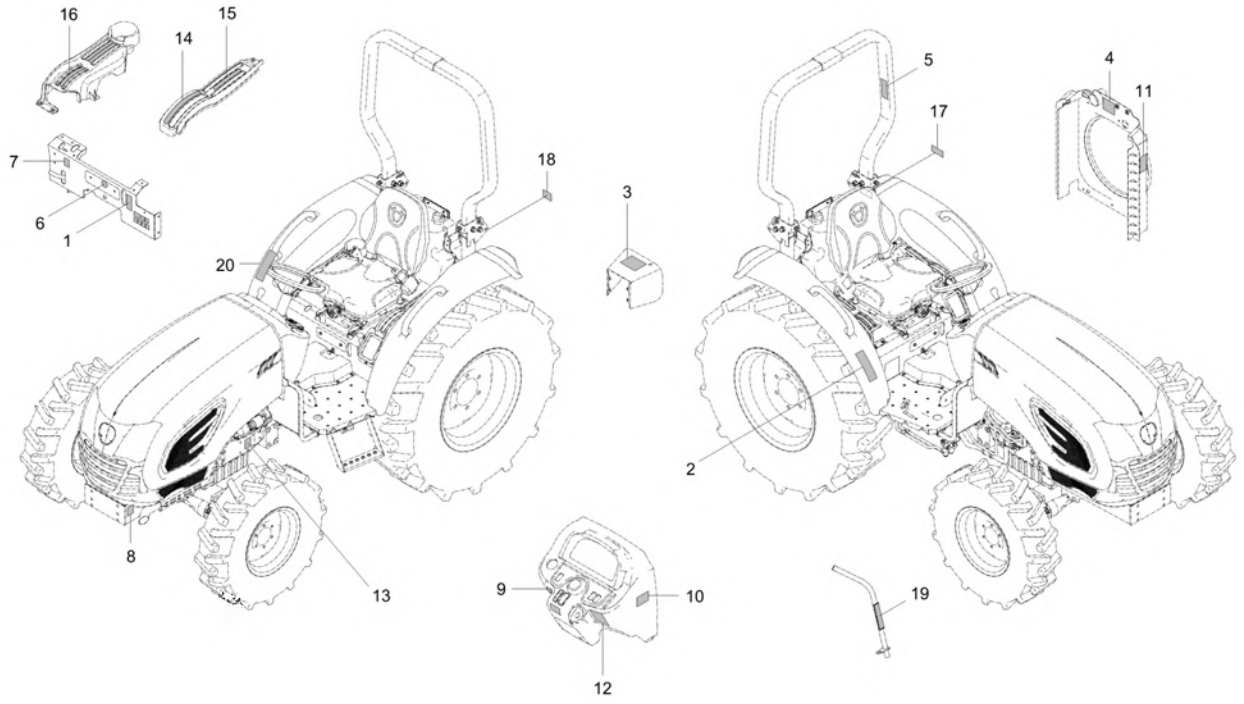

A : CK2610

No.	Part Number	Description	Qty A	Qty B	Qty C	Qty D	Qty E	I.C	Remark
1	T2241-50311	NAME,PLATE	1						
2	T2555-52141	LABEL,CAUTION	1						
3	T2555-52262	LABEL, CAUTION	1						
4	T2555-52282	LABEL RADIATOR v	1						
5	T2555-52353	ROPS LABEL	1						
6	T2610-52461	LABEL, SPEED CONTROL	1						
7	T2611-26693	LABEL, DIFFERENTIAL FIXING	1						
8	T2615-55112	LABEL, MUFFLER CAUTION	1						
9	T4025-57521	DECAL PARK BRAKE	1						
10	T4182-53191	LABEL, WARNING	1						
11	T4625-52351	LABEL, FAN CAUTION	1						
12	T4938-52351	LABEL, BRAKE REMINDER	1						
13	T4938-53551	LABEL	1						
14	T5855-67422	LABEL	1						
15	T5855-67431	LABEL, PTO LEVER	1						
16	T5855-67441	LABEL, POSITION&RAFTLEVER	1						
17	TC26-0388A	LABEL, WARNING FUELING	1						
18	TG16-1530A	DAEDONGOILLABEL(EN)	1 TL9400149 ~ WL9400080						80 x 35

----> Old replace New <---- New replace Old <-X-> Not interchangeable
<---> Interchangeable <-O-> Interchangeable with another part(s)
* Please place an order assy(*)

https://tractormanualz.com/

TC2-G6D3007

LABEL(MAIN/ETC) GROUP

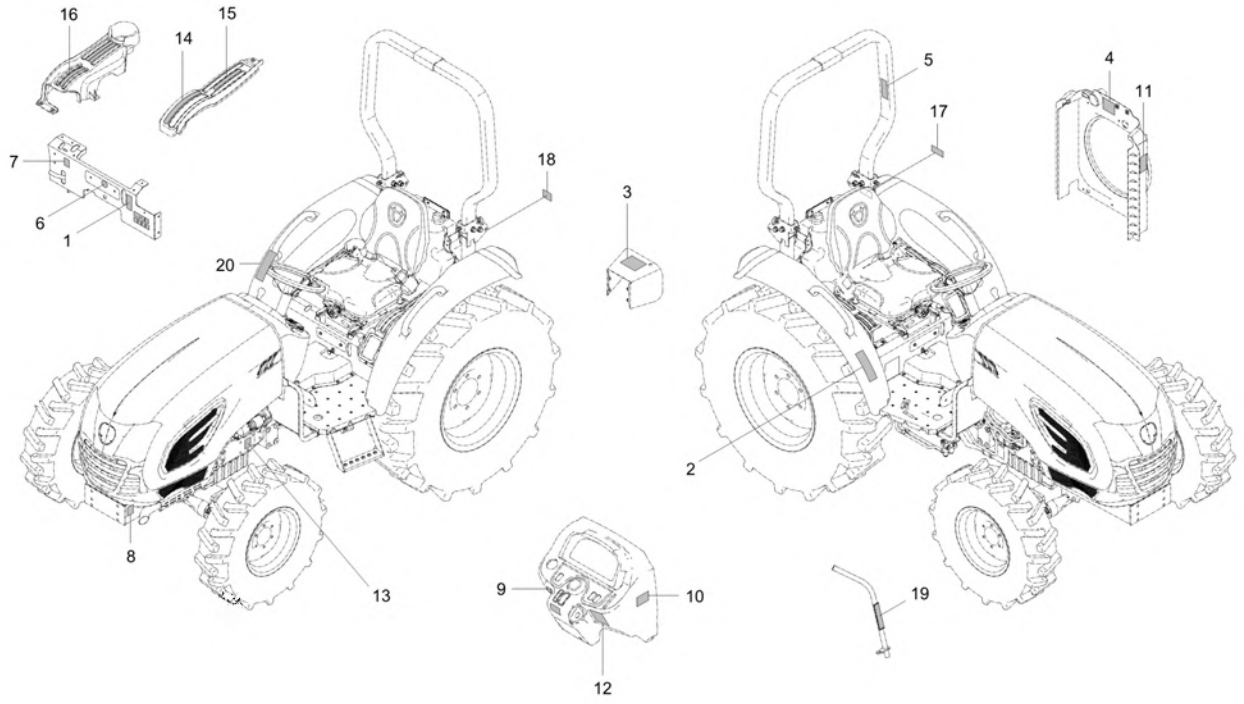

A : CK2610

No.	Part Number	Description	Qty A	Qty B	Qty C	Qty D	Qty E	I.C	Remark
18	TG16-1530A	DAEDONGOILLABEL(EN)	2					<------	80 x 35
18	TG16-1530B	DAEDONG OIL LABEL	1					<------	80 x 35
19	TG16-1540A	DAEDONGOILLABEL(EN)	1						135 x 35
20	TD26-1009B	LABEL, WARNING	1 VL9400345 ~ WL9400080					<------	-

----> Old replace New
<----> Interchangeable
* Please place an order assy(*)
<---- New replace Old
<-O-> Interchangeable with another part(s)
<-X-> Not interchangeable

https://tractormanualz.com/

TC2-G611017

AIR CLEANER GROUP

A : CK2610

No.	Part Number	Description	Qty A	Qty B	Qty C	Qty D	Qty E	I.C	Remark
1	TC26-1865A	AIR CLEANER ASSY(5.5IN)	1						
2	TC26-1869A	MAIN FILTER(5.5IN)	1						
3	38325-1398-1	BAND,AIR CLEANER	2						
3	TC26-1945A	HOLDER, AIR CLEANER	2					<------	
4	T5855-50012	HOSE, INLET	1						OD 75 / ID 63
5	TC26-0116A	HOSE, SUCTION	1						OD 72 / ID 60
6	KX97382-S51	ASSY, CLAMP v	4						DIA70스탠 76#

----> Old replace New
<---- New replace Old
<-X-> Not interchangeable
<---> Interchangeable
<-O-> Interchangeable with another part(s)
* Please place an order assy(*)

https://tractormanualz.com/

TC2-G612515

RADIATOR GROUP

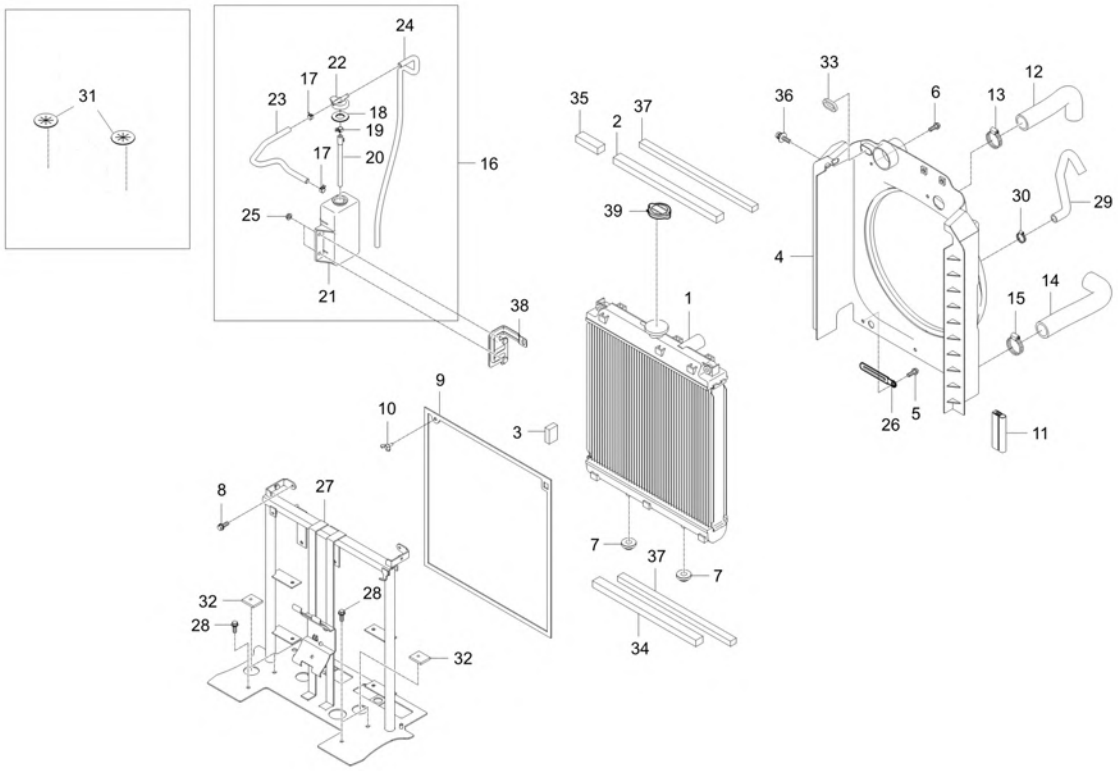

A : CK2610

No.	Part Number	Description	Qty A	Qty B	Qty C	Qty D	Qty E	I.C	Remark
1	T5855-50411	RADIATOR ASSY dnr v	1 ~ WL9400128						
1	TC26-1800A	ASSY RADIATOR-OS	1					<----->	-
2	T5855-50421	SOPNGE,1	1						20X26
3	T5855-50441	SPONGE,3	1						45X30XL
4	T5855-50453	SHROUD	1						-
4	T5855-50454	SHROUD	1					<----->	-
5	01754-50612	BOLT, FLANGE	5						M6XP1.0
6	01754-50614	FLANGE BOLT	1						M6XP1.0
7	T4125-13561	CUSHION	2						
8	01754-50622	BOLT FLANGE	2						
9	T5855-50462	Net-Radiator	1						N
10	01811-50615	BOLT,WING	1						
11	T5855-50552	RUBBER,RADIATOR	2						-
12	T5858-50471	HOSE,UPPER	1						OD 46 / ID 34
13	E1500-18411	CLAMP BAND	2						
14	T5858-50481	HOSE,LOWER	1						OD 46 / ID 34
15	E1500-18411	CLAMP BAND	2						
16	T5855-50521	RESERVOIR ASSY	1						N

----> Old replace New
<---- New replace Old
<-X-> Not interchangeable
<---> Interchangeable
<-O-> Interchangeable with another part(s)
* Please place an order assy(*)

https://tractormanualz.com/

TC2-G612515

RADIATOR GROUP

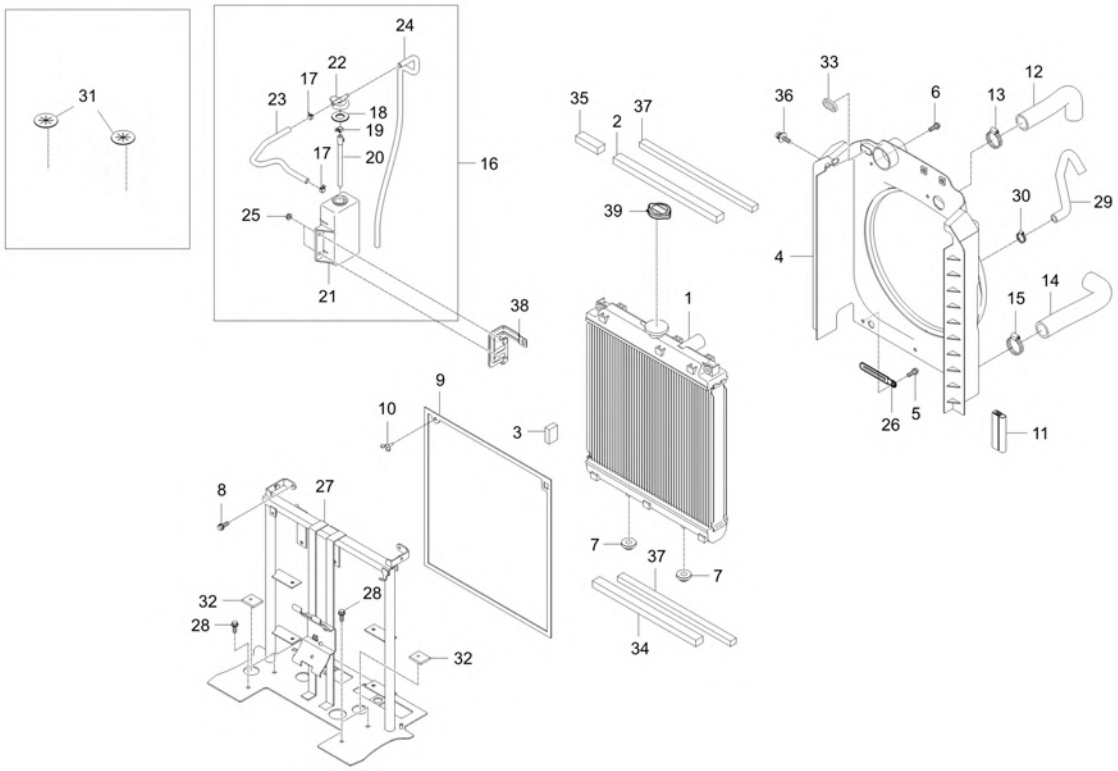

A : CK2610

No.	Part Number	Description	Qty A	Qty B	Qty C	Qty D	Qty E	I.C	Remark
17	14911-4275-1	CLIP, TUBE	2						T0.8*#12
18	15532-7243-2	PACKING	1						-
19	54821-3818-2	CLIP, TUBE	1						
20	T2350-13602006	HOSE v	1						-
21	T2350-13612	TANK, WATER	1						
22	T5525-50721	CAP v	1						
23	T5855-50522001	HOSE, COOLING WATER AUTO RETURN	1						L=350
24	T5855-50521002	HOSE, OVER FLOW-1	1						L=750
25	02751-50080	FLANGE NUT 8MMX1.25P	2						M8XP1.25
26	37150-34471	CLAMP, CORD v	1						
27	T5855-50514	RADIATOR SUPPORT v	1						-
28	T2185-70491	BOLT	4						
29	TC26-0117A	HOSE, WATER RETURN	1						
30	66204-3623-1	BAND, HOSE	2						
31	T5855-50562	COVER, RUBBER	3						T3.0
32	T4876-50251	SPONGE	1						
33	T5858-50421	COVER, RUBBER	1						N
34	T5855-50571	SPONGE, 5	1						고발포 PU 폼

----> Old replace New
<----> Interchangeable
* Please place an order assy(*)
<---- New replace Old
<-O-> Interchangeable with another part(s)
<-X-> Not interchangeable

https://tractormanualz.com/

TC2-G612515

RADIATOR GROUP

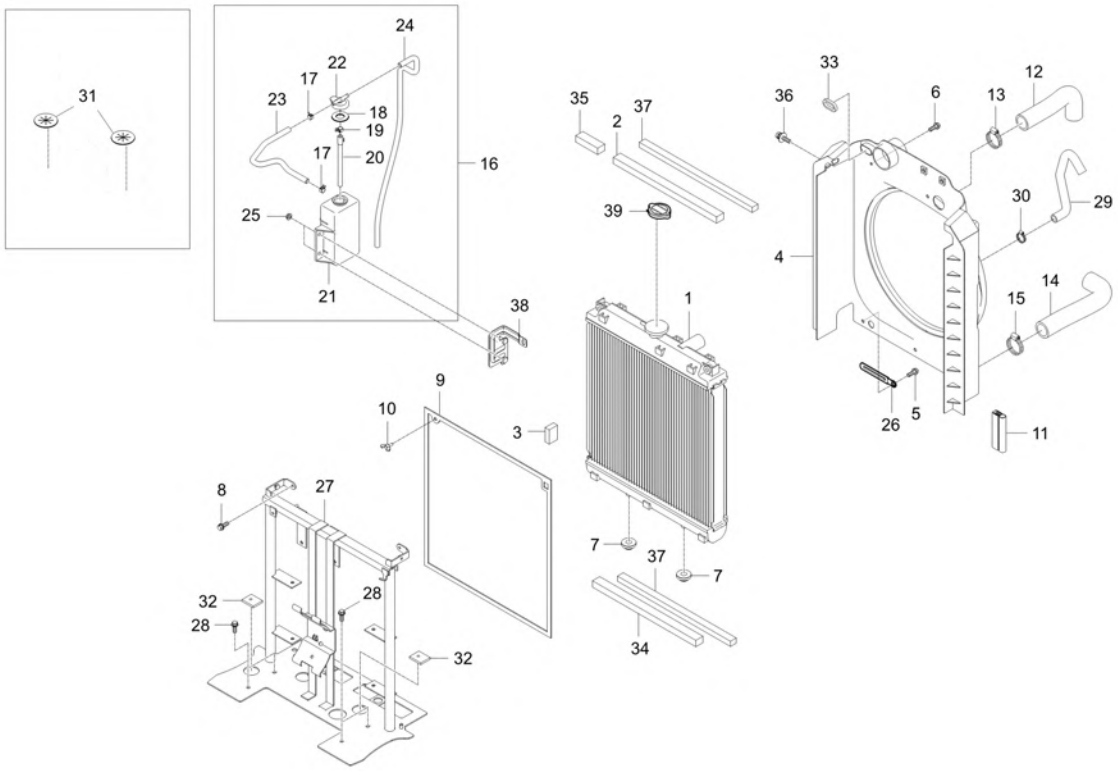

A : CK2610

No.	Part Number	Description	Qty A	Qty B	Qty C	Qty D	Qty E	I.C	Remark
35	T5855-50581	SPONGE, 6	1						<F6>□<F>20 X26
36	01027-50616	BOLT, WASHER	2						
37	T4931-72091	SPONGE	2						
38	TC26-1615A	BRACKET	1						-
39	U3215-77501	Radiator Cap	1						

----> Old replace New
<---- New replace Old
<-X-> Not interchangeable
<---> Interchangeable
<-O-> Interchangeable with another part(s)
* Please place an order assy(*)

https://tractormanualz.com/

TC2-G621006

FRONT AXLE FRAME GROUP(OS)

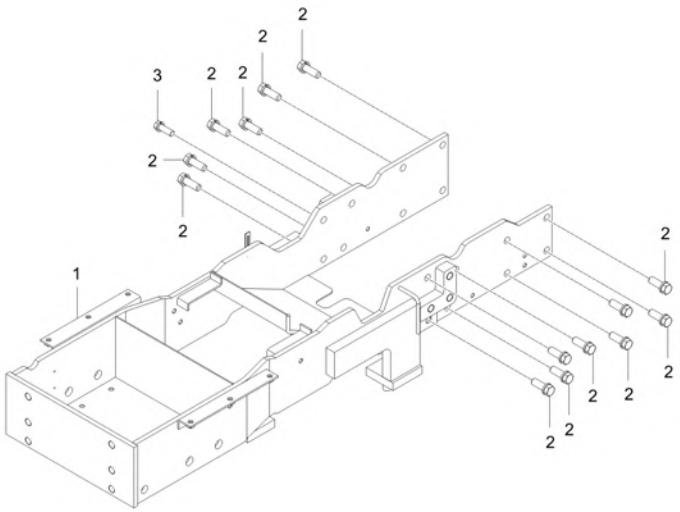

A : CK2610

No.	Part Number	Description	Qty A	Qty B	Qty C	Qty D	Qty E	I.C	Remark
1	TC26-1794A	FRAME, FRONT AXLE-OS	1						
1	TC26-1794B	FRAME, FRONT AXLE-OS	1					<------	
2	01177-51235	BOLT v	15						M12XP1.25
3	01177-51030	BOLT	1						M10XP1.25 (9T)

----> Old replace New
<---> Interchangeable
* Please place an order assy(*)
<---- New replace Old
<-O-> Interchangeable with another part(s)
<-X-> Not interchangeable

https://tractormanualz.com/

TC2-G631002

ROPS BAR GROUP

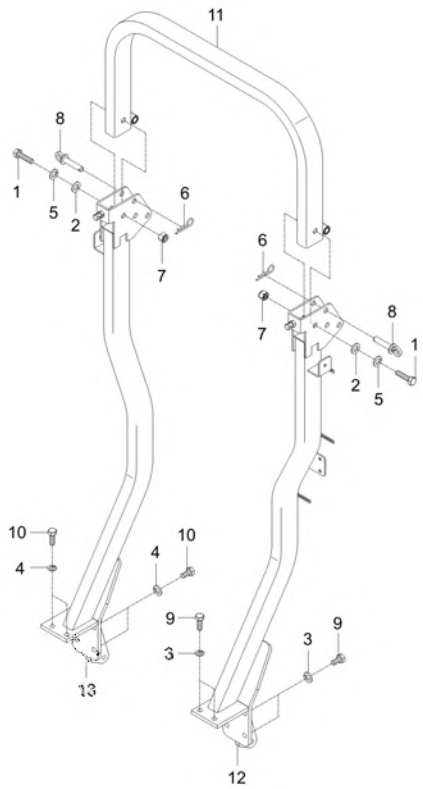

A : CK2610

No.	Part Number	Description	Qty A	Qty B	Qty C	Qty D	Qty E	I.C	Remark
1	01173-51690	BOLT	4						
2	04011-50160	PLAIN WASHER	8						M16
3	04512-50140	SPRING WASHER	6						M14
4	04512-50140	SPRING WASHER	6						M14
5	04512-50160	WASHER, SPRING	4						M16
6	05515-51600	PIN, SNAP	2						DIA16
7	T2181-97191	SELF LOCK NUT(M16)	4						
8	T2185-97153	PIN, SET B(ROPS)	2						
9	T2230-85242	BOLT	6						M14*2.0*32
10	T2230-85242	BOLT	6						M14*2.0*32
11	T5715-55202	ROPS ASSY	1 ~ WL9400080						N
11	TC26-1493A	ASSY ROPS	1					<----->	
12	T5855-66812	SUPPORT, LH dnr v	1 ~ TL9400100						
12	T5855-66813	SUPPORT, LH dnr v	1 TL9400101 ~ TL9400148					<------	
13	T5855-66832	SUPPORT,RH	1 ~ TL9400100						
13	T5855-66833	SUPPORT,RH	1 TL9400101 ~ TL9400148					<------	

----> Old replace New
<---- New replace Old
<-X-> Not interchangeable
<---> Interchangeable
<-O-> Interchangeable with another part(s)
* Please place an order assy(*)

https://tractormanualz.com/

TC2-G631007

ROPS BAR GROUP

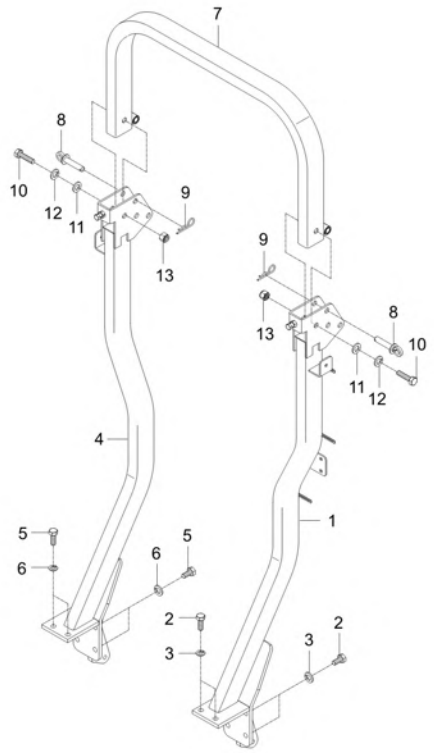

A : CK2610

No.	Part Number	Description	Qty A	Qty B	Qty C	Qty D	Qty E	I.C	Remark
1	TC26-1497A	SUPPORT, LH	1						
2	T2230-85242	BOLT	6						M14*2.0*32
3	04512-50140	SPRING WASHER	6						M14
4	TC26-1498A	SUPPORT, RH	1						
5	T2230-85242	BOLT	6						M14*2.0*32
6	04512-50140	SPRING WASHER	6						M14
7	T5715-55202	ROPS ASSY	1						N
8	T2185-97153	PIN, SET B(ROPS)	2						
9	05515-51600	PIN, SNAP	2						DIA16
10	01173-51690	BOLT	4						
11	04011-50160	PLAIN WASHER	8						M16
12	04512-50160	WASHER, SPRING	4						M16
13	T2181-97191	SELF LOCK NUT(M16)	4						

----> Old replace New
<---- New replace Old
<-X-> Not interchangeable
<---> Interchangeable
<-O-> Interchangeable with another part(s)
* Please place an order assy(*)

https://tractormanualz.com/

TC2-G661005

SEAT GROUP

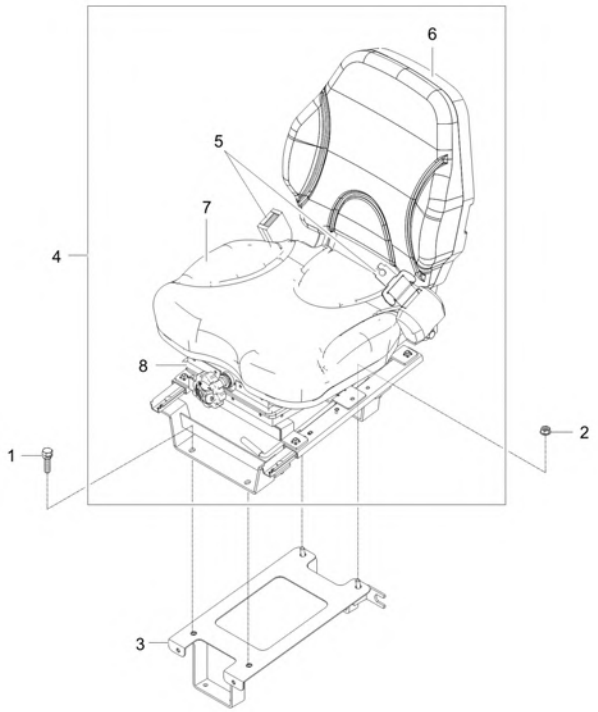

A : CK2610

No.	Part Number	Description	Qty A	Qty B	Qty C	Qty D	Qty E	I.C	Remark
1	01754-50820	BOLT, FLANGE	6						M8XP1.25
2	02763-50080	FLANGE NUT	2						M8XP1.25
3	T5855-61114	SUPPORT, SEAT	1						-
4	TC26-0065C	ASSY SEAT v dnr	1 RL9400001 ~						
4	TC26-0065D	ASSY SEAT v	1 UL9400001 ~ VL9400230					<------	
5	T5310-85001012	SEAT BELT ASSY CK10 v	1						
6	T5715-52411001	BACK PAD ASSY	1						
7	T5715-52411002	CUSHION PAD ASSY	1						
8	TC26-0077B	SUSPENSION ASSY	1						

----> Old replace New
<----> Interchangeable
* Please place an order assy(*)
<---- New replace Old
<-O-> Interchangeable with another part(s)
<-X-> Not interchangeable

https://tractormanualz.com/

TC2-G661022

SEAT GROUP

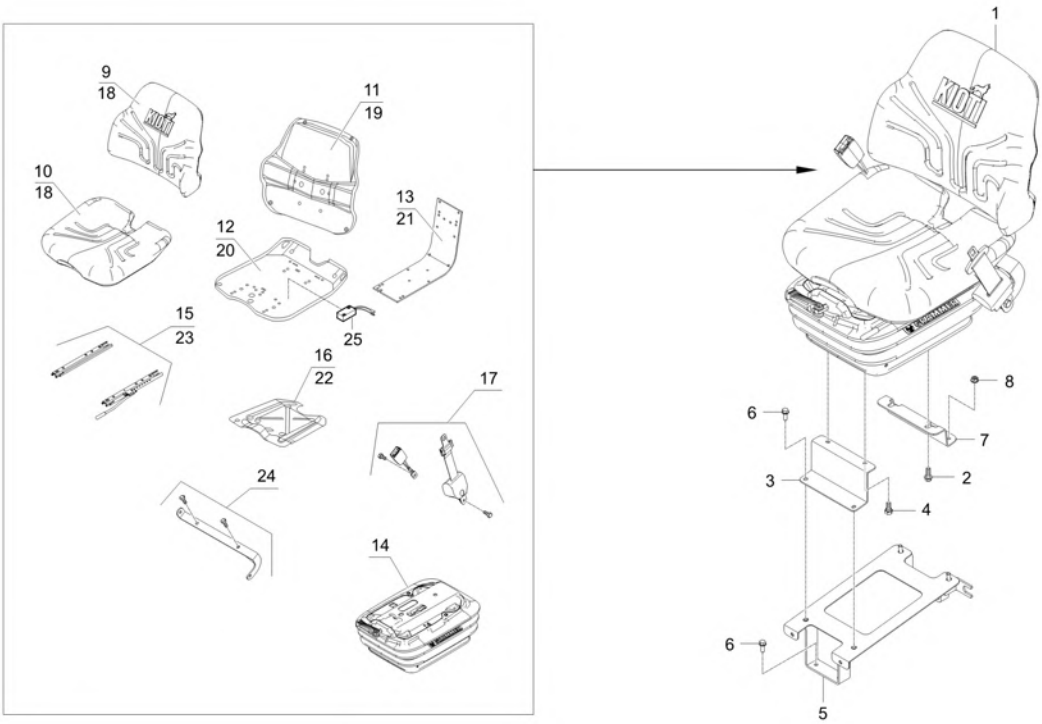

A : CK2610

No.	Part Number	Description	Qty A	Qty B	Qty C	Qty D	Qty E	I.C	Remark
1	TC26-1718A	ASSY SEAT	1						
1	TC26-1718B	ASSY SEAT	1					<------	
1	TC26-1718C	ASSY SEAT	1					<------	
2	T2350-50633	BOLT, BONNET	2						
3	TC26-1734A	BRACKET, SEAT MOUNTING - FR	1						T3.2
4	01754-50820	BOLT, FLANGE	2						M8XP1.25
5	T5855-61114	SUPPORT, SEAT	1						-
6	01754-50820	BOLT, FLANGE	6						M8XP1.25
7	TC26-1735A	BRACKET, SEAT MOUNTING - RR	1						T3.2
8	02763-50080	FLANGE NUT	2						M8XP1.25
9	TC26-1769A	CUSHION, BACK-CPL	1						
9	TC26-1769B	CUSHION, BACK-CPL	1					<------	
10	TC26-1772A	CUSHION-SEAT CPL	1						
11	TC26-1773A	SEAT, BACK-CPL	1						
12	TC26-1774A	SEAT-PAN CPL	1						
12	TC26-1774B	SEAT-PAN CPL	1					<------	
13	TC26-1776A	SEAT, BACK-CPL	1						
14	TC26-1778A	SUSPENSION-MSG283 CPL	1						

----> Old replace New
<---- New replace Old
<-X-> Not interchangeable
<---> Interchangeable
<-O-> Interchangeable with another part(s)
* Please place an order assy(*)

https://tractormanualz.com/

TC2-G661022

SEAT GROUP

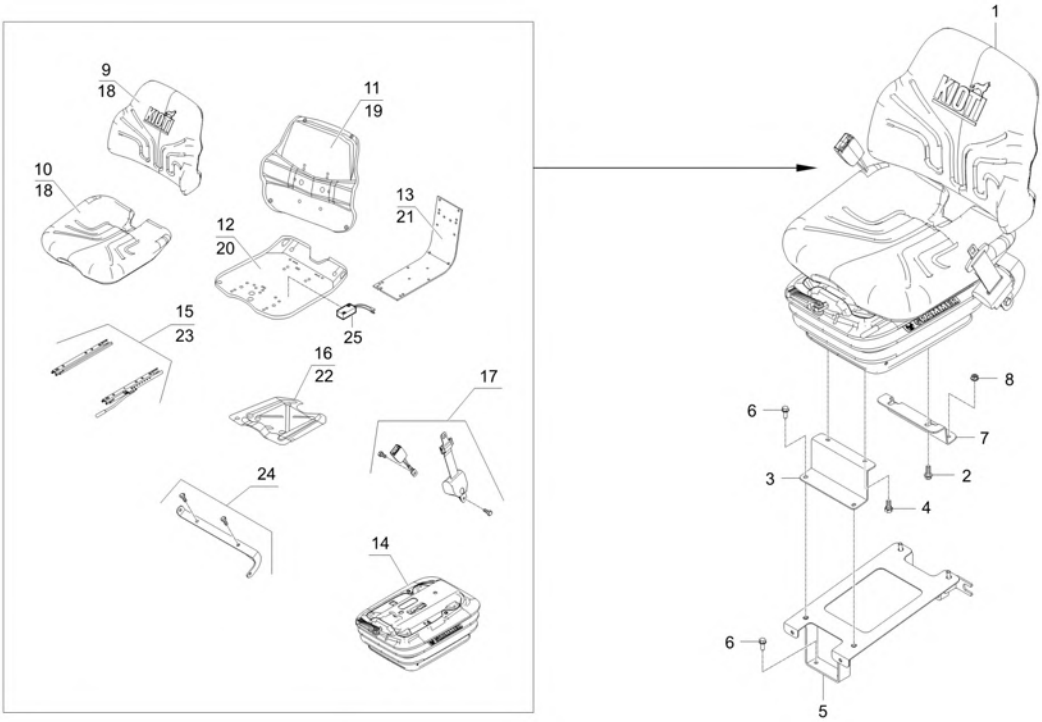

A : CK2610

No.	Part Number	Description	Qty A	Qty B	Qty C	Qty D	Qty E	I.C	Remark
15	TC26-1780A	RAIL, SLIDE-CPL	1						
16	TC26-1781A	SWITCH-SEAT CPL	1						
17	TC26-1784A	BELT, SEAT-CPL	1						
18	TC26-1786A	FASTENER-BACKREST CUSHION CPL	1						
19	TC26-1787A	FASTENER-BACKREST CPL	1						
20	TC26-1788A	FASTENER-SEAT PAN CPL	1						
21	TC26-1789A	FASTENER-BACKREST CPL	1						
22	TC26-1790A	FASTENER-SEAT SWITCH CPL	1						
23	TC26-1792A	FASTENER-SLIDE RAIL CPL	1						
24	TD26-1146A	BRACKET,BELT-SEAT CPL	1						
25	TC26-1834A	SWITCH-SEAT	1						

----> Old replace New
<----> Interchangeable
* Please place an order assy(*)
<---- New replace Old
<-O-> Interchangeable with another part(s)
<-X-> Not interchangeable

https://tractormanualz.com/

TC2-G695004

PTO SHAFT COVER GROUP

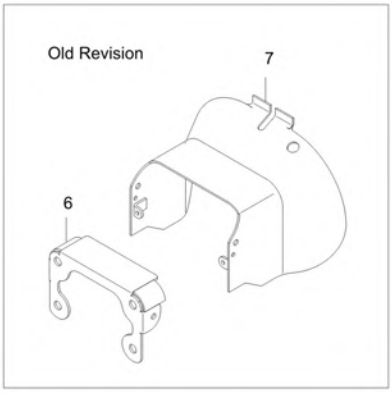

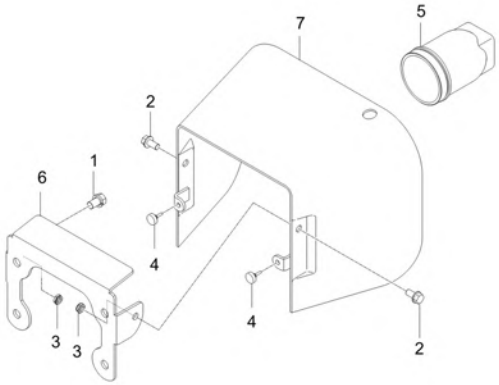

A : CK2610

No.	Part Number	Description	Qty A	Qty B	Qty C	Qty D	Qty E	I.C	Remark
1	01135-51030	BOLT, WASHER	4						M10XP1.25
2	01754-50816	BOLT, FLANGE	2						M8XP1.25
3	41011-5151-4	NUT, LOCK (M8) v	2						
4	K9100-50241	CHSSING	2						
5	T2181-25442	COVER, PTO SHAFT v	1						
6	T5715-55011	BRACKET	1 ~ WL9400040						
6	TC26-1690A	BRACKET, PTO PROTECTION COVER	1 WL9400041 ~ WL9400080					<--O-->	T3.2
7	T5715-55021	COVER, PTO	1 ~ WL9400040						
7	TC26-1689A	COVER, PTO PROTECTION	1 WL9400041 ~ WL9400080					<--O-->	

----> Old replace New
<---- New replace Old
<-X-> Not interchangeable
<---> Interchangeable
<-O-> Interchangeable with another part(s)
* Please place an order assy(*)

https://tractormanualz.com/

TC2-G617001

BATTERY FIXING GROUP

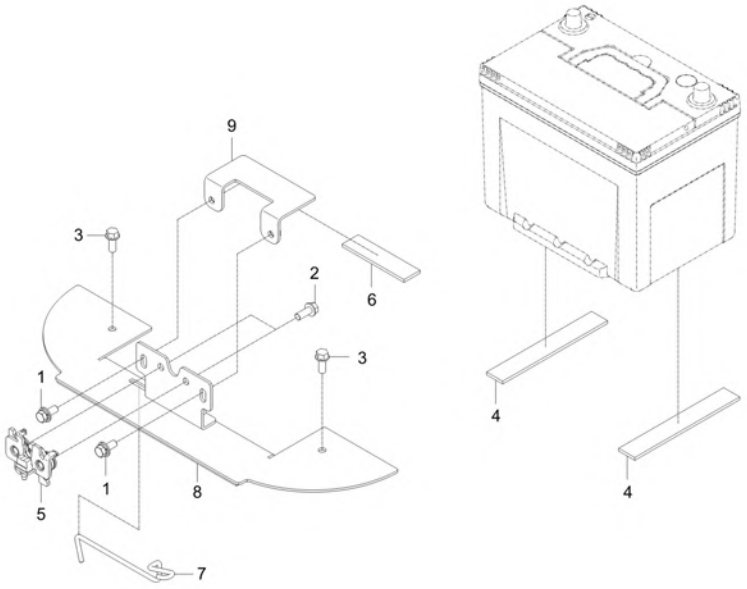

A : CK2610

No.	Part Number	Description	Qty A	Qty B	Qty C	Qty D	Qty E	I.C	Remark
1	01125-50820	BOLT, WASHER	2						M8XP1.25
2	01754-50820	BOLT, FLANGE	2						M8XP1.25
3	T2185-70491	BOLT	2						
4	T2610-50271	RUBBER, CUSHION v	2						
5	T4145-60582	LATCH ASSY	1						
6	T4157-50271	RUBBER, CUSHION	1						
7	T5710-50061	ROD	1						DIA 5
7	T5855-52032	ROD	1					<------	DIA 5
7	T5855-52033	LATCH, ROD	1					<------	DIA 5
8	T5855-52013	BRACKET	1 ~ SL9400214						-
8	T5855-52014	BRACKET	1 SL9400215 ~ WL9400080					<----->	-
9	T5855-52021	BRACKET	1						

----> Old replace New
<---- New replace Old
<-X-> Not interchangeable
<---> Interchangeable
<-O-> Interchangeable with another part(s)
* Please place an order assy(*)

https://tractormanualz.com/

TC2-G621002

FRONT AXLE FRAME GROUP

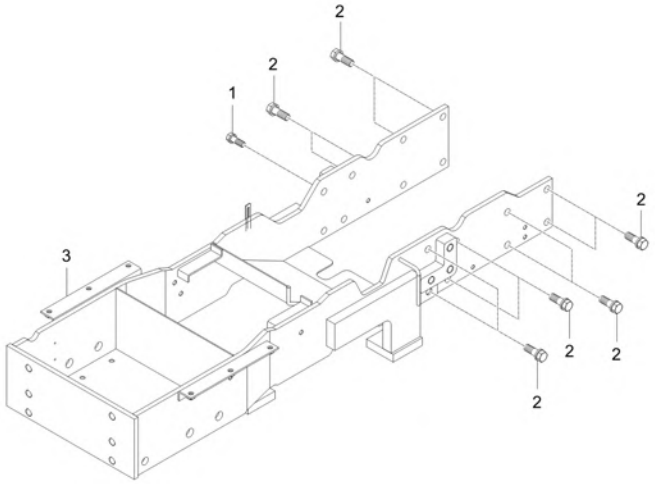

A : CK2610

No.	Part Number	Description	Qty A	Qty B	Qty C	Qty D	Qty E	I.C	Remark
1	01177-51030	BOLT	1						M10XP1.25 (9T)
2	01177-51235	BOLT v	15						M12XP1.25
3	T5855-51215	FRONT FRAME ASSY	1 RL9400001 ~ SL9400134						-
3	T5855-51216	FRONT FRAME ASSY	1 SL9400103 ~ SL9400238					<----->	-
3	T5855-51217	FRONT FRAME ASSY dnr v	1 SL9400239 ~ TL9400048					<----->	-
3	T5855-51218	FRONT FRAME ASSY	1 TL9400001 ~ TL9400056					<------	-
3	TC26-0425C	FRAME, FRONT AXLE	1 TL9400057 ~ TL9400148					<----->	
3	TC26-0425D	FRAME, FRONT AXLE v	1 TL9400149 ~ WL9400080					<----->	
3	TC26-0425E	FRAME, FRONT AXLE	1					<----->	

----> Old replace New <---- New replace Old <-X-> Not interchangeable
<---> Interchangeable <-O-> Interchangeable with another part(s)
* Please place an order assy(*)

https://tractormanualz.com/

TC2-G631011

ROPS BAR GROUP

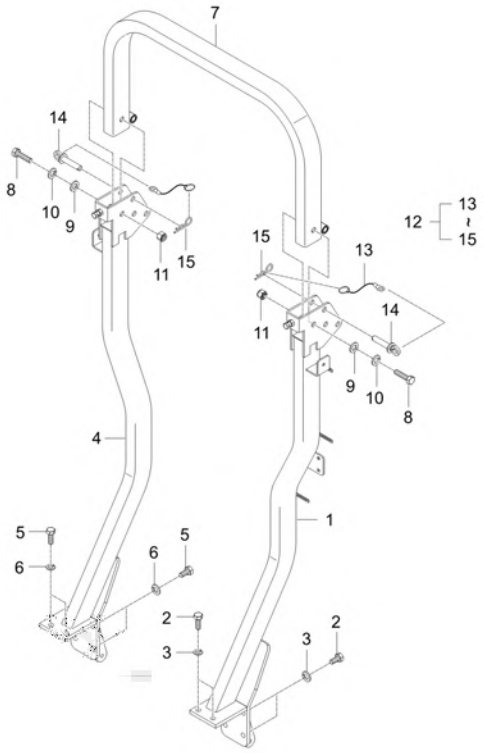

A : CK2610

No.	Part Number	Description	Qty A	Qty B	Qty C	Qty D	Qty E	I.C	Remark
1	TC26-1497A	SUPPORT, LH	1						
1	TC26-1497B	SUPPORT,LH	1					<------	
2	T2230-85242	BOLT	6						M14*2.0*32
3	04512-50140	SPRING WASHER	6						M14
4	TC26-1498A	SUPPORT, RH	1						
4	TC26-1498B	SUPPORT,RH	1					<------	
5	T2230-85242	BOLT	6						M14*2.0*32
6	04512-50140	SPRING WASHER	6						M14
7	T5715-55202	ROPS ASSY	1						N
7	T5715-55203	ROPS	1					<------	-
8	01173-51690	BOLT	2						
9	04011-50160	PLAIN WASHER	4						M16
10	04512-50160	WASHER, SPRING	2						M16
11	T2181-97191	SELF LOCK NUT(M16)	2						
12	TC26-1717B	PIN, ROPS FIXING	2						-
13	T2145-97151001	ASSY WIRE	1						
14	T2185-97153	PIN, SET B(ROPS)	1						
15	05515-51600	PIN, SNAP	1						DIA16

----> Old replace New
<---> Interchangeable
* Please place an order assy(*)
<---- New replace Old
<-O-> Interchangeable with another part(s)
<-X-> Not interchangeable

https://tractormanualz.com/

TC2-G633001

STEP SEAT FRAME GROUP

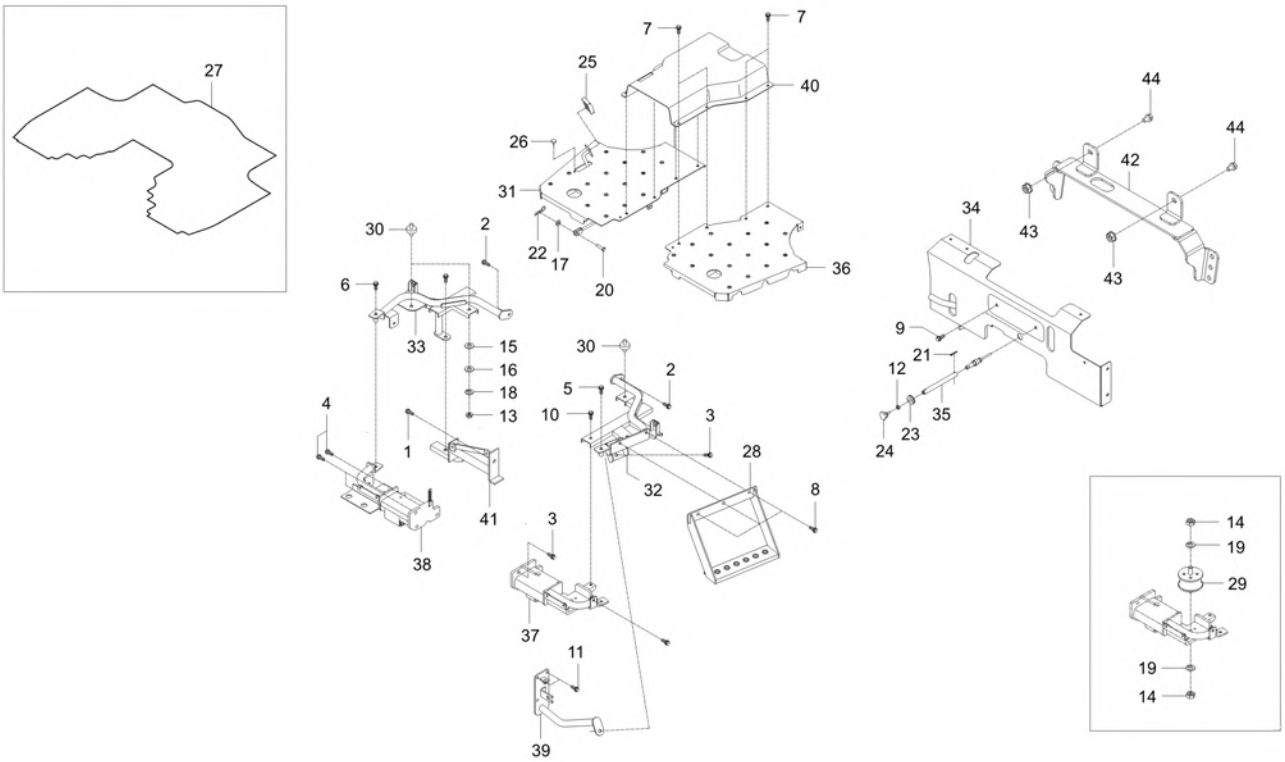

A : CK2610

No.	Part Number	Description	Qty A	Qty B	Qty C	Qty D	Qty E	I.C	Remark
1	01133-51020	BOLT	1						M10XP1.25
2	01133-51020	BOLT	2						M10XP1.25
3	01133-51025	BOLT	4						M10XP1.25
4	01133-51025	BOLT	4						M10XP1.25
5	01133-51045	BOLT	1						
6	01133-51045	BOLT	1						
7	01754-50812	BOLT, FLANGE	8						M8XP1.25
8	01754-50816	BOLT, FLANGE	3						M8XP1.25
9	01754-50816	BOLT, FLANGE	2						M8XP1.25
10	01754-50822	BOLT, FLANGE	1						M8XP1.25
11	01754-50822	BOLT, FLANGE	2						M8XP1.25
12	02056-50060	NUT	1						M6XP1.0
13	02176-50100	NUT v	4						M10XP1.25
14	02176-50120	NUT	4						M12XP1.25
15	04011-50100	PLAIN WASHER	4						M10
16	04011-50100	PLAIN WASHER	4						M10
17	04012-50060	PLAIN WASHER	1						M6
18	04512-50100	SPRING WASHER	4						M10

----> Old replace New <---- New replace Old <-X-> Not interchangeable
<---> Interchangeable <-O-> Interchangeable with another part(s)
* Please place an order assy(*)

https://tractormanualz.com/

TC2-G633001

STEP SEAT FRAME GROUP

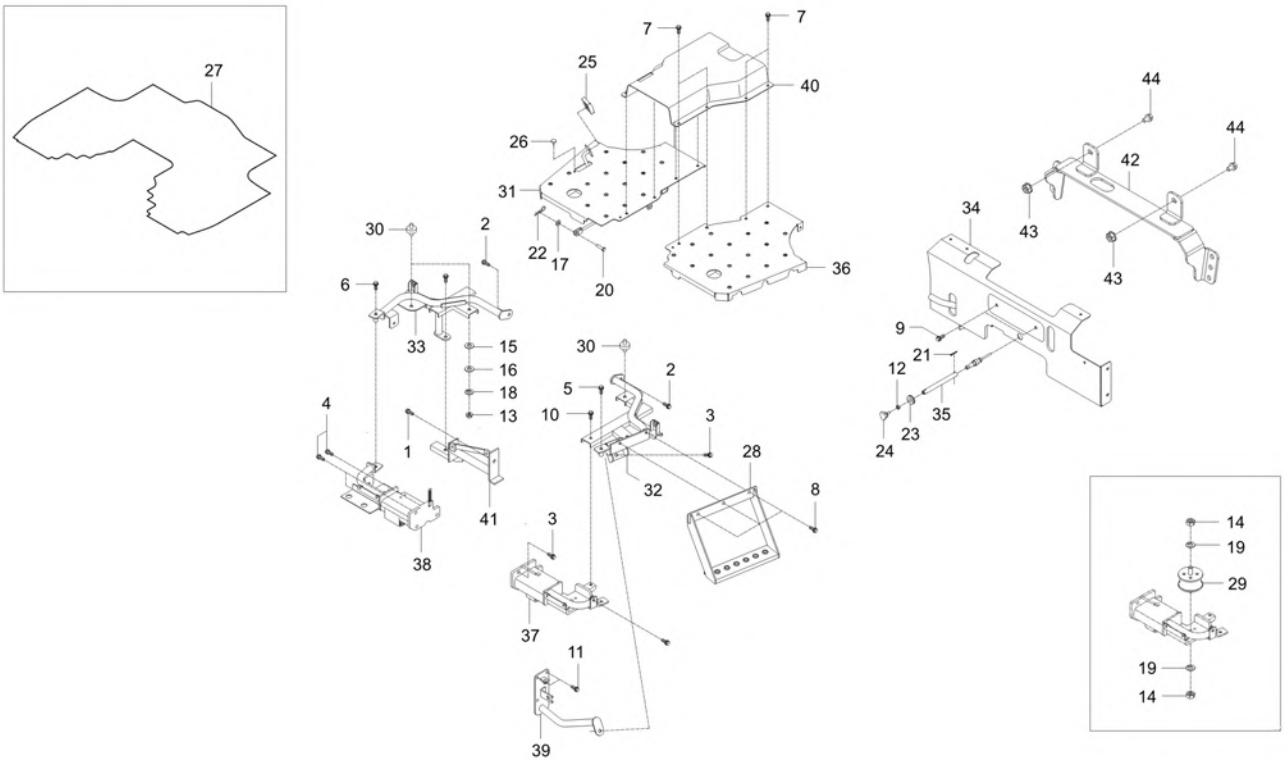

A : CK2610

No.	Part Number	Description	Qty A	Qty B	Qty C	Qty D	Qty E	I.C	Remark
19	04512-50120	SPRING WASHER	4						M12
20	05122-50618	JOINT PIN	1						
21	05511-50320	PIN, SPLIT	1						DIA2.7XL20
22	05525-50600	SNAP PIN	1						DIA6
23	31355-2949-1	GROMMET	1						
24	82KC-0807	KNOB	1						
25	T2350-26661	RUBBER, PEDAL	1						
26	T2555-55851	RUBBER, CUSHION	1						
27	T4125-70261	MAT	1						T0.4-0.5
28	T4620-70221	STEP dnr v	1						
28	T4620-70222	STEP v	1					<------	
29	T5410-70211	DUSTPROOF RUBBER	2						
30	T5520-80391	DUSTPROOF RUBBER	4						
31	T5815-62314	STEP, RH MEC	1						-
31	T5815-62315	STEP,RH(MEC)	1					<------	-
31	T5815-62316	STEP, RH(MEC)	1					<------	-
31	T5815-62316OE	STEP,RH(MEC)	1					<------	-
31	T5815-62317	STEP,RH(MEC)	1					<----->	-

----> Old replace New <---- New replace Old <-X-> Not interchangeable
<---> Interchangeable <-O-> Interchangeable with another part(s)
* Please place an order assy(*)

https://tractormanualz.com/

TC2-G633001

STEP SEAT FRAME GROUP

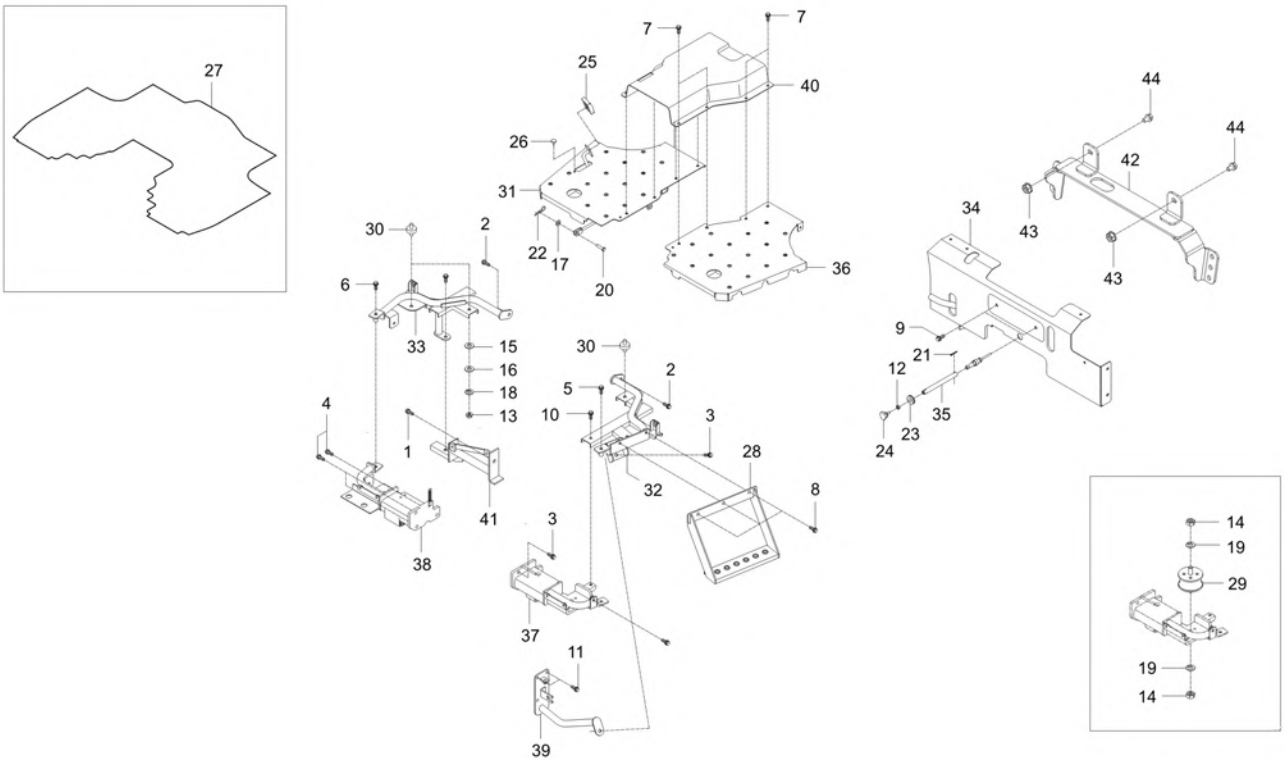

A : CK2610

No.	Part Number	Description	Qty A	Qty B	Qty C	Qty D	Qty E	I.C	Remark
32	T5850-62333	BRACKET	1						-
33	T5850-62343	BRAKET	1						
34	T5855-62014	SEAT FLOOR	1						-
34	T5855-62015	SEAT FLOOR	1					<----->	-
35	T5855-62051	ROD	1						DIA12
36	T5855-62324	STEP,LH	1						-
36	T5855-62325	STEP,LH	1					<------	-
36	T5855-62326	STEP, LH	1					<------	-
36	T5855-62326OE	STEP,LH	1					<------	-
36	T5855-62327	STEP,LH	1					<----->	-
37	T5855-62335	BRACKET	1						-
37	T5855-62336	BRACKET	1					<----->	-
38	T5855-62346	BRACKET	1						-
38	T5855-62347	BRACKET	1					<----->	-
38	T5855-62348	BRACKET	1					<------	-
39	T5855-62353	BRACKET	1						-
40	T5855-62363	STEP,CENTER	1						T2.3
41	T5855-62402	SUPPORT STEP RH,UNDER	1						-

----> Old replace New <---- New replace Old <-X-> Not interchangeable
<---> Interchangeable <-O-> Interchangeable with another part(s)
* Please place an order assy(*)

https://tractormanualz.com/

TC2-G633001

STEP SEAT FRAME GROUP

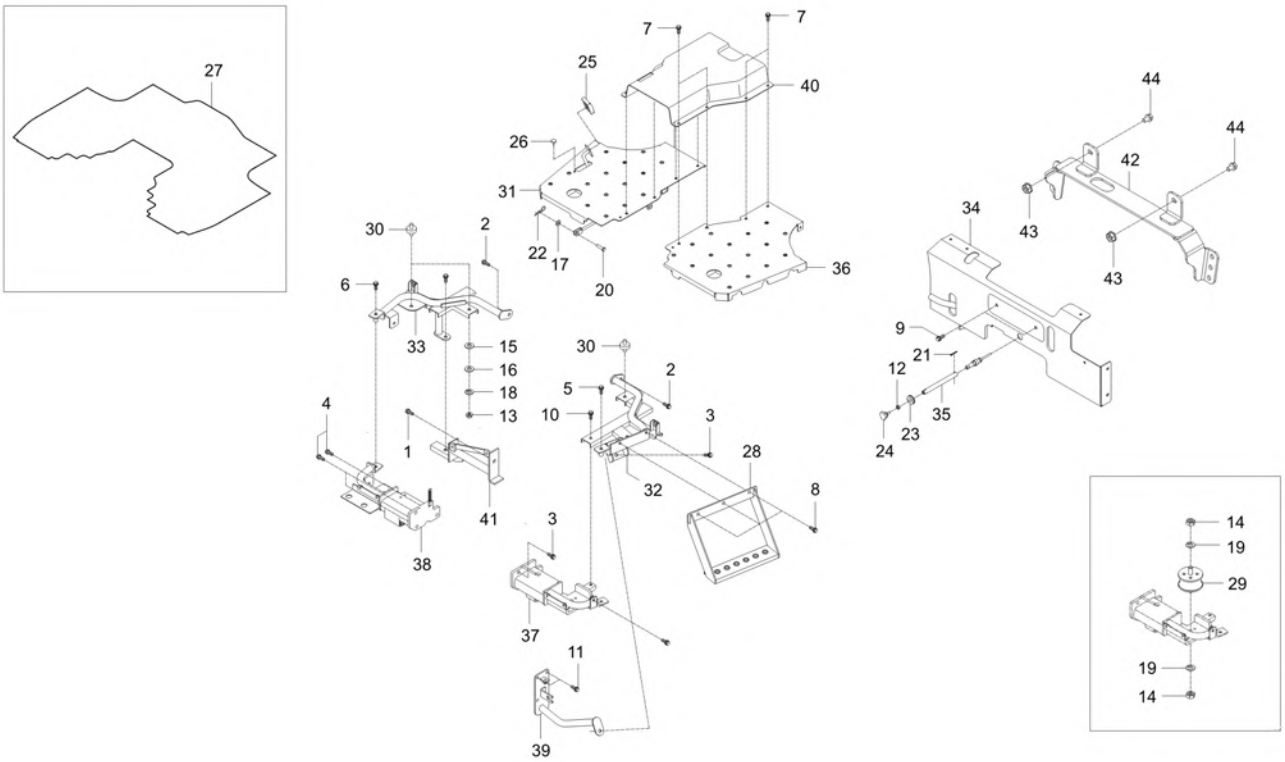

A : CK2610

No.	Part Number	Description	Qty A	Qty B	Qty C	Qty D	Qty E	I.C	Remark
42	TC26-0007B	BRACKET, NUMBER	1						
43	02156-50080	NUT v	1						M8XP1.25
44	T2350-55881	BOLT ADJUSTING	1						

----> Old replace New
<----> Interchangeable
* Please place an order assy(*)
<---- New replace Old
<-O-> Interchangeable with another part(s)
<-X-> Not interchangeable

https://tractormanualz.com/

TC2-G637001

LEVER GUIDE(CAB) GROUP

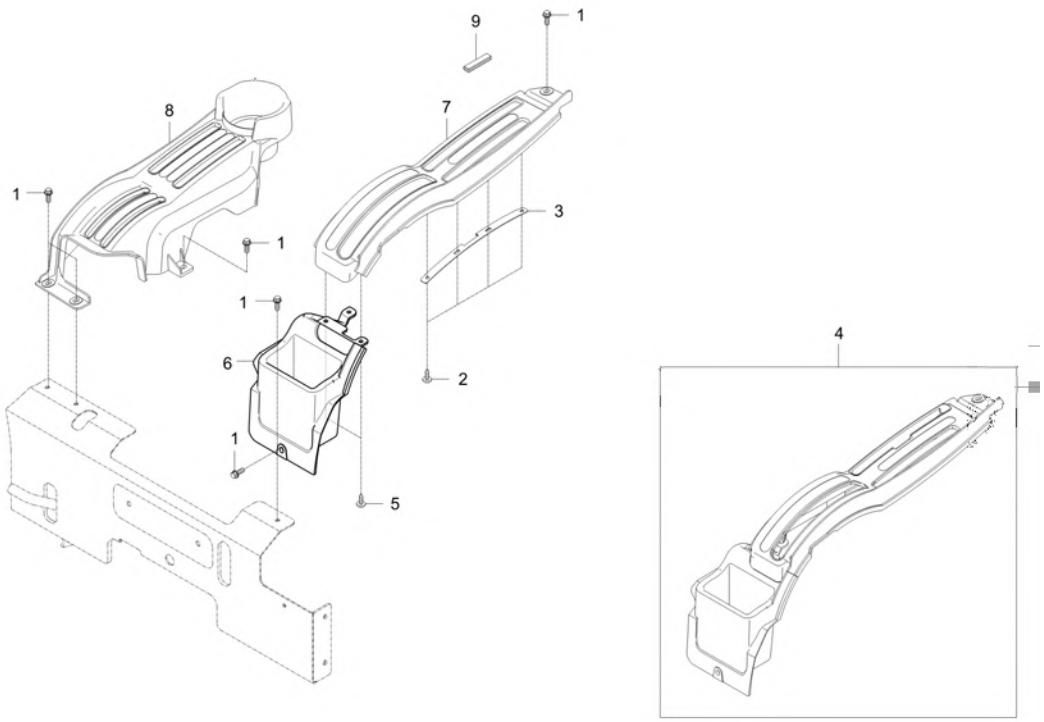

A : CK2610

No.	Part Number	Description	Qty A	Qty B	Qty C	Qty D	Qty E	I.C	Remark
1	01754-50616	BOLT, FLANGE v	8						M6XP1.0
2	38430-1827-1	SCREW	4						-
3	T4670-95431	PLATE, GUIDE	1						
4	T5815-57204	LEVER GUIDE ASSY, LH	1						
5	T5710-51181	SCREW	3						M5 X 10
6	T5815-57224	LEVERGUIDE, LH MEC	1						T3.0
7	T5855-57215	LEVER GUIDE LH	1						-
8	T5855-57235	LEVER GUIDE RH	1						-
9	TC26-0301A	RUBBER	1						-

----> Old replace New
<---- New replace Old
<-X-> Not interchangeable
<---> Interchangeable
<-O-> Interchangeable with another part(s)
* Please place an order assy(*)

https://tractormanualz.com/

TC2-G640101

MAIN SHIFT LEVER GROUP

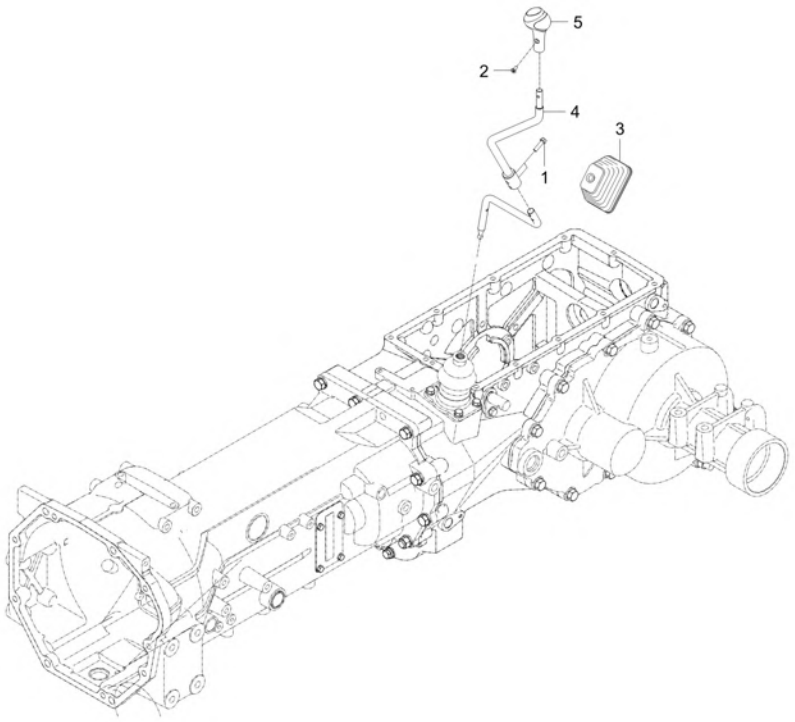

A : CK2610

No.	Part Number	Description	Qty A	Qty B	Qty C	Qty D	Qty E	I.C	Remark
1	01123-50830	BOLT, WASHER v	2						M8P1.25*30
2	03016-50616	SCREW	1						M6XP1.0
3	T2185-60372	JABALA(MAIN-SHIFT)	1						-
4	T5815-56413	LEVER,MAIN	1						
5	T5815-56422	GRIP, MAIN-CHANGE	1						-

----> Old replace New <---- New replace Old <-X-> Not interchangeable
<---> Interchangeable <-O-> Interchangeable with another part(s)
* Please place an order assy(*)

https://tractormanualz.com/

TC2-G640502

RANGE SHIFT LEVER GROUP

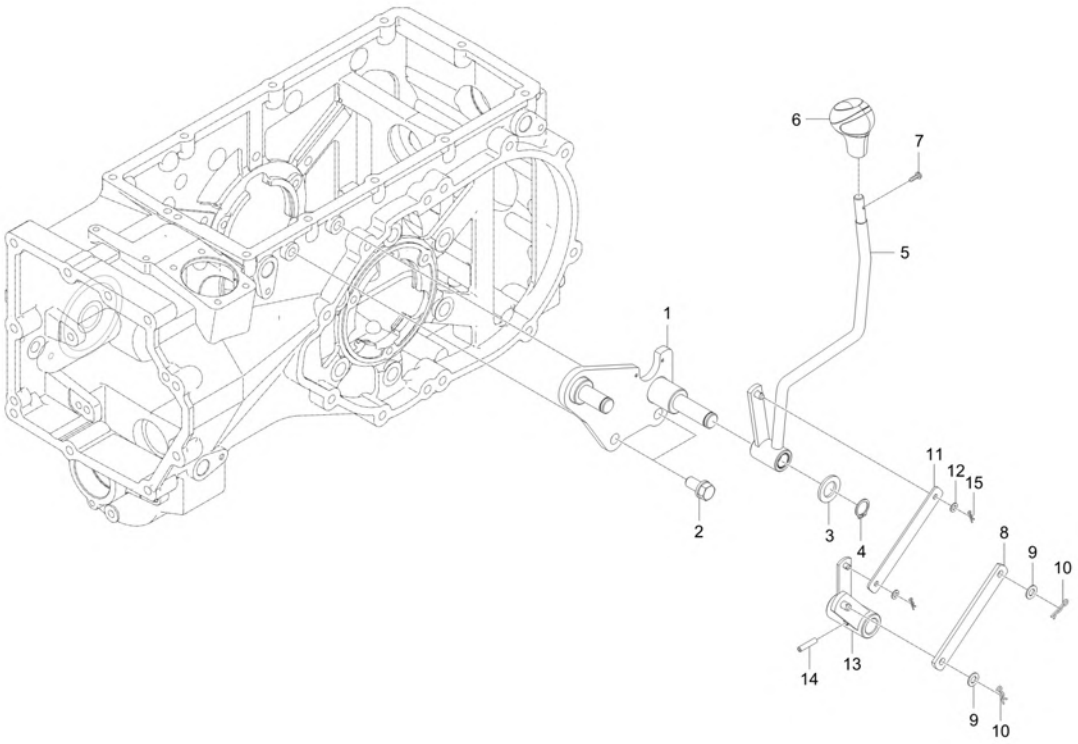

A : CK2610

No.	Part Number	Description	Qty A	Qty B	Qty C	Qty D	Qty E	I.C	Remark
1	T5855-56212	BRACKET, HI-LO	1						
2	01133-51225	BOLT, WASHER v	2						M12XP1.25
3	04011-50180	PLAIN WASHER	1						M18
4	04612-00180	SNAP RING	1						DIA18
5	T5855-56224	LEVER, RANGE v	1						-
6	T5855-56261	GRIP	1						
7	03024-50514	BOLT,SCREW	1						
8	T5855-56232	ROD, RANGE v	1						T4.5
9	04012-50080	WASHER, PLAIN	2						M8
10	05525-50800	PIN, SNAP	2						DIA8
11	T5855-56241	BRACKET	1						T2.3
12	04012-50060	PLAIN WASHER	2						M6
13	T5855-56252	ARM, RANGE SHIFT	1						
14	05411-00630	PIN, SPRING	1						DIA6.4XL30
15	05525-50600	SNAP PIN	2						DIA6

----> Old replace New
<---- New replace Old
<-X-> Not interchangeable
<---> Interchangeable
<-O-> Interchangeable with another part(s)
* Please place an order assy(*)

https://tractormanualz.com/

TC2-G641001 POSITION DRAFT CONTROL LEVER GROUP

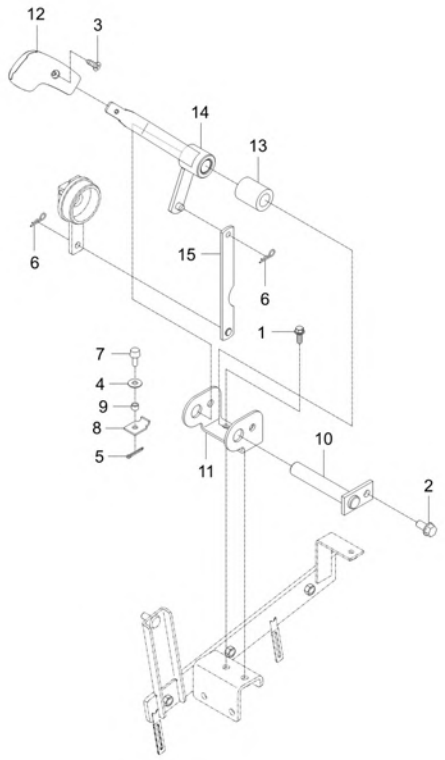

A : CK2610

No.	Part Number	Description	Qty A	Qty B	Qty C	Qty D	Qty E	I.C	Remark
1	01754-50816	BOLT, FLANGE	2						M8XP1.25
2	01754-50816	BOLT, FLANGE	1						M8XP1.25
3	03056-50510	SCREW	1						M5XP0.8
4	04015-50060	WASHER, PLAIN	1						M6
5	05511-50215	PIN,SPLIT	1						DIA1.8XL15
6	05525-50800	PIN, SNAP	2						DIA8
7	55571-3238-1	BOLT v	1						
8	T2350-95472	STOPPER v	1						
9	T4520-83301	SPACER	1						DIA10.5*T2.0
10	T4835-66532	SHAFT	1						
11	T5710-53412	BRACKET	1						T4.5
12	T5710-53471	GRIP	1						
13	T5715-53471	BUSHING	1						OD28,ID16.5
14	T5855-56813	POSITION LEVER	1						-
15	T5855-56822	ROD	1						

----> Old replace New <---- New replace Old <-X-> Not interchangeable
<---> Interchangeable <-O-> Interchangeable with another part(s)
* Please place an order assy(*)

https://tractormanualz.com/

TC2-G642001

JOYSTICK LEVER GROUP

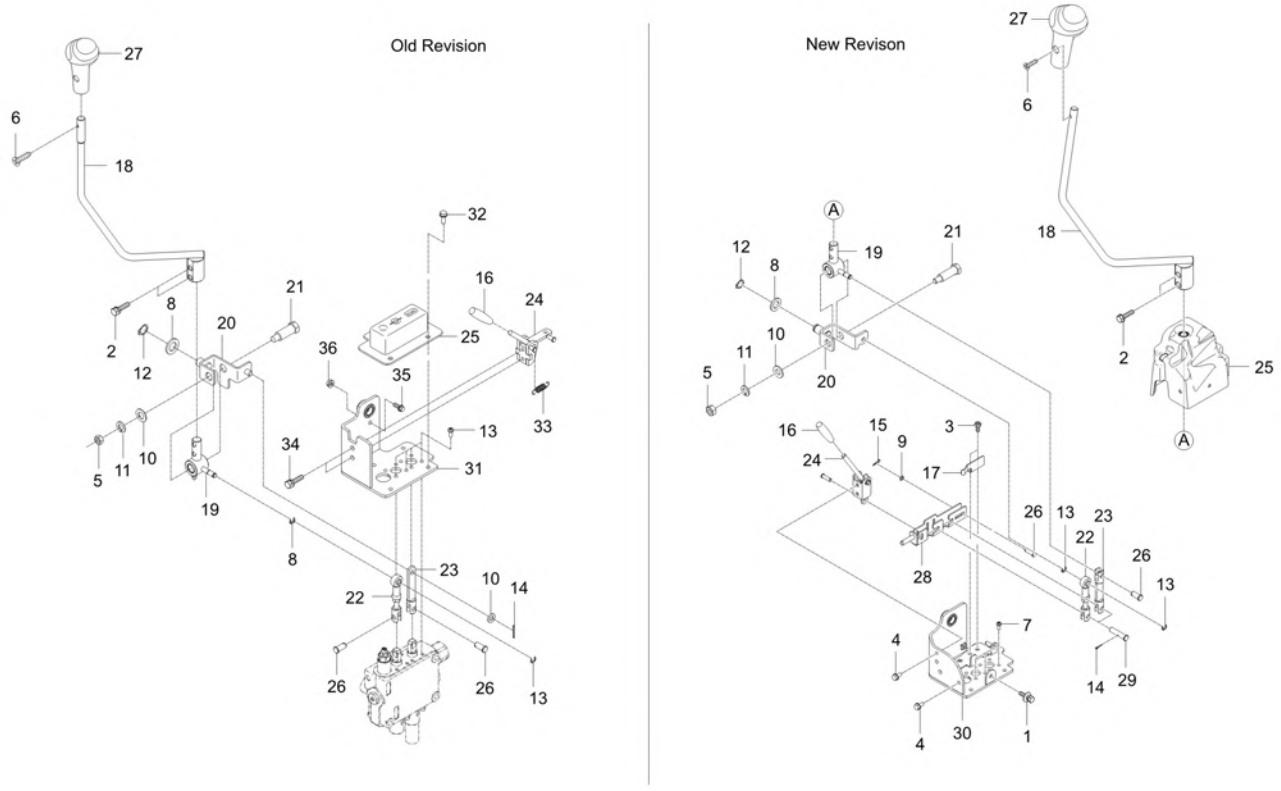

A : CK2610

No.	Part Number	Description	Qty A	Qty B	Qty C	Qty D	Qty E	I.C	Remark
1	01027-50614	BOLT	4						
2	01123-50830	BOLT, WASHER v	2						M8P1.25*30
3	01202-50620	BOLT	3						M6XP1.0
4	01754-50612	BOLT, FLANGE	2						M6XP1.0
5	02176-50100	NUT v	1						M10XP1.25
6	03016-50616	SCREW	1						M6XP1.0
7	03024-50512	BOLT,SCREW	8						M5XP0.8
8	04011-50140	WASHER, PLAIN	1						M14
9	04012-50060	PLAIN WASHER	1						M6
10	04013-50100	PLAIN WASHER	1						M10
11	04512-50100	SPRING WASHER	1						M10
12	04612-00150	CIR CLIP, EXTERNAL	1						DIA15
13	04613-50060	RING SNAP	2						DIA06
14	05511-50220	PIN, SPLIT	3						DIA1.8XL20
15	05525-50600	SNAP PIN	1						DIA6
16	T2185-71241	GRIP, DARK BLUE	1						
17	T2555-60741	PLATE SPRING, MOWER DECK	1						
18	T5855-57804	LEVER,JOYSTICK	1 ~ RL9400002						

----> Old replace New
<----> Interchangeable
* Please place an order assy(*)
<---- New replace Old
<-O-> Interchangeable with another part(s)
<-X-> Not interchangeable

https://tractormanualz.com/

TC2-G642001 JOYSTICK LEVER GROUP

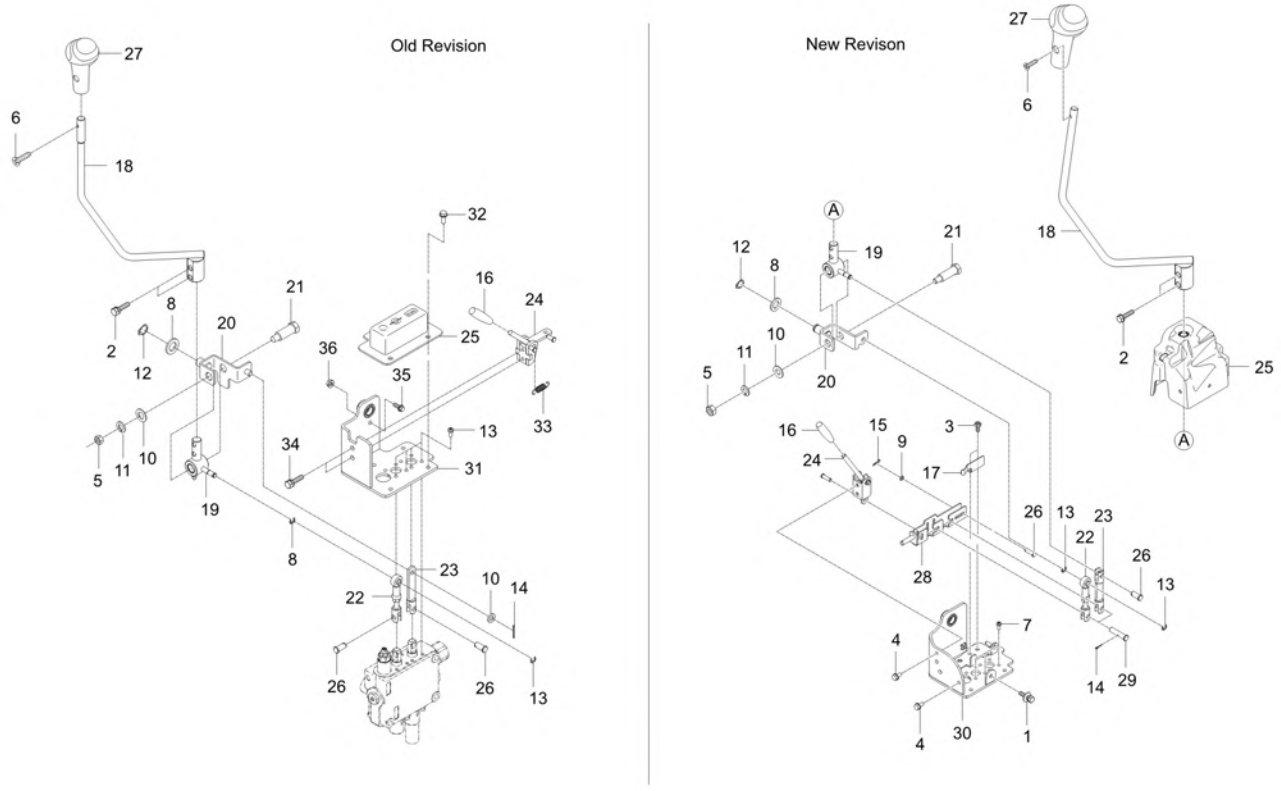

A : CK2610

No.	Part Number	Description	Qty A	Qty B	Qty C	Qty D	Qty E	I.C	Remark
18	T5855-57805	LEVER,JOYSTICK	1 RL9400003 ~ WL9400080					<----->	
19	T5855-57812	LEVER	1						N
19	T5855-57813	LEVER 1, JOYSTICK	1					<--X-->	-
20	T5855-57822	LEVER 2, JOYSTICK	1						-
21	T5855-57832	SHAFT,JOYSTICK	1						M10XP1.25
22	T5855-57842	ROD	1						N
23	T5855-57853	ROD2,JOYSTICK	1						
24	T5855-57864	LEVER3,JOYSTICK	1						
24	T5855-57865	LEVER 3, JOYSTICK	1					<--X-->	
24	T5855-57866	LEVER3,JOYSTICK	1					<----->	
25	T5855-57881	BOOT	1						
25	T5855-57882	BOOT, JOYSTICK	1					<--X-->	
26	T5855-57901	DOWEL PIN	1						OD9XL20
27	T5855-57912	GRIP, JOYSTICK	1						-
28	TC26-0086A	BRACKET	1						
29	TC26-0095A	JOIN PIN	2						OD9XL40
30	TC26-0305A	BASE, SUPPORT v	1						
31	T5855-57874	SUPPORT,JOYSTICK	1						-

----> Old replace New
<----> Interchangeable
* Please place an order assy(*)
<---- New replace Old
<-O-> Interchangeable with another part(s)
<-X-> Not interchangeable

https://tractormanualz.com/

TC2-G642001

JOYSTICK LEVER GROUP

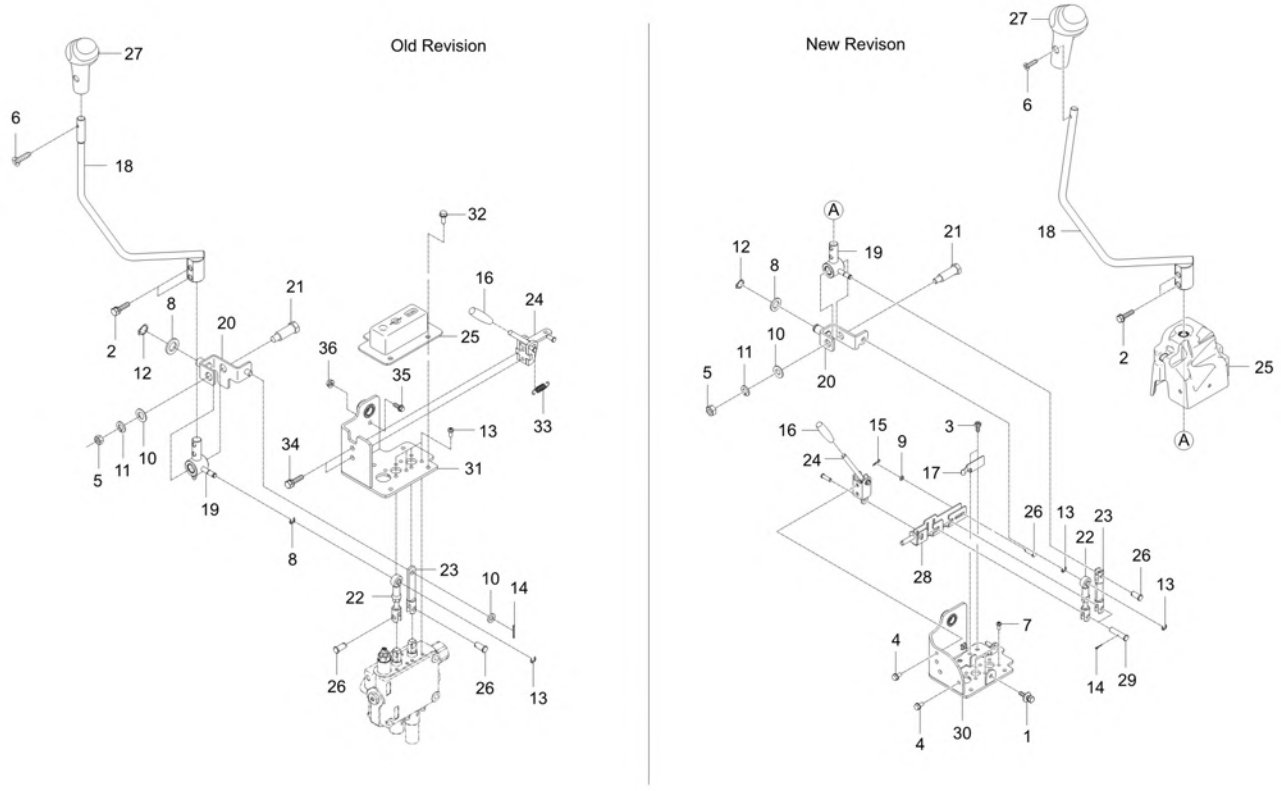

A : CK2610

No.	Part Number	Description	Qty A	Qty B	Qty C	Qty D	Qty E	I.C	Remark
31	T5855-57875	SUPPORT JOYSTICK v	1					<--X-->	-
32	01754-50616	BOLT, FLANGE v	4						M6XP1.0
33	57781-5121-1	FRICTION SPRING	1						DIA1.2
34	01123-50814	BOLT, WASHER	2						M8XP1.25
35	01754-50625	BOLT, FLANGE	1						M6XP1.0
36	02751-50060	NUT, FLANGE	1						M6XP1.0

----> Old replace New
<---> Interchangeable
* Please place an order assy(*)
<---- New replace Old
<-O-> Interchangeable with another part(s)
<-X-> Not interchangeable

https://tractormanualz.com/

TC2-G643001

PTO LEVER GROUP

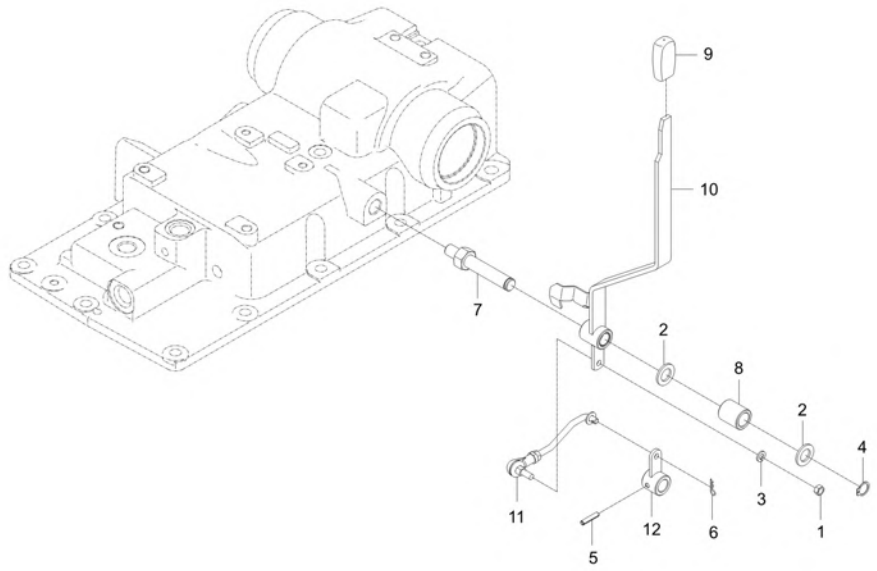

A : CK2610

No.	Part Number	Description	Qty A	Qty B	Qty C	Qty D	Qty E	I.C	Remark
1	02156-50080	NUT v	1						M8XP1.25
2	04011-50180	PLAIN WASHER	2						M18
3	04512-50080	SPRING WASHER	1						M08
4	04612-00180	SNAP RING	1						DIA18
5	05411-00630	PIN, SPRING	1						DIA6.4XL30
6	05525-50800	PIN, SNAP	1						DIA8
7	T2185-24283	SHAFT(PTO)	1						HEX27
8	T2185-24292	SPACER(MID PTO)	1						
9	T2350-25871	GRIP A	1						
10	T5855-56613	LEVER, PTO	1						
11	T5855-56621	ROD	1						
12	T5855-56631	ARM, CONNECTING v	1						

----> Old replace New <---- New replace Old <-X-> Not interchangeable
<---> Interchangeable <-O-> Interchangeable with another part(s)
* Please place an order assy(*)

https://tractormanualz.com/

TC2-G644501

FRONT WHEEL DRIVE LEVER GROUP

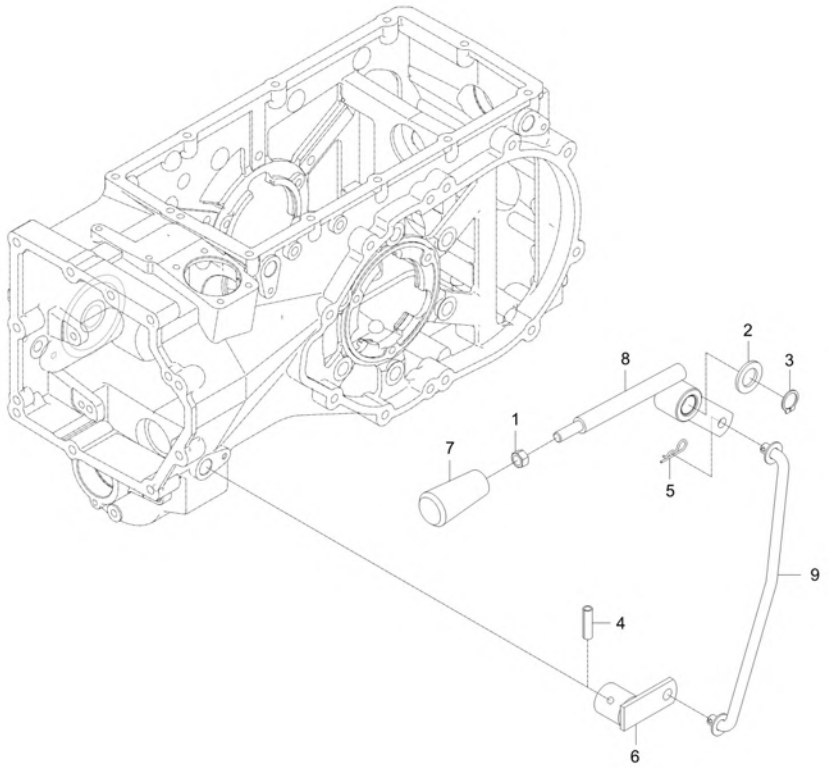

A : CK2610

No.	Part Number	Description	Qty A	Qty B	Qty C	Qty D	Qty E	I.C	Remark
1	02176-50100	NUT v	1						M10XP1.25
2	04011-50180	PLAIN WASHER	1						M18
3	04612-00180	SNAP RING	1						DIA18
4	05411-00630	PIN, SPRING	1						DIA6.4XL30
5	05525-51000	PIN, SNAP	2						DIA10
6	T2185-44764	LINK1,FRONT DRIVE	1						
7	T5715-53611	GRIP	1						N
8	T5855-57612	4WD LEVER	1 ~ WL9400040						
8	T5855-57613	4WD LEVER	1 WL9400041 ~ WL9400080					<----->	
9	T5855-57632	ROD ,FRONT DRIVE	1						

----> Old replace New
<---- New replace Old
<-X-> Not interchangeable
<---> Interchangeable
<-O-> Interchangeable with another part(s)
* Please place an order assy(*)

https://tractormanualz.com/

TC2-G645001

PARKING BRAKE LEVER GROUP

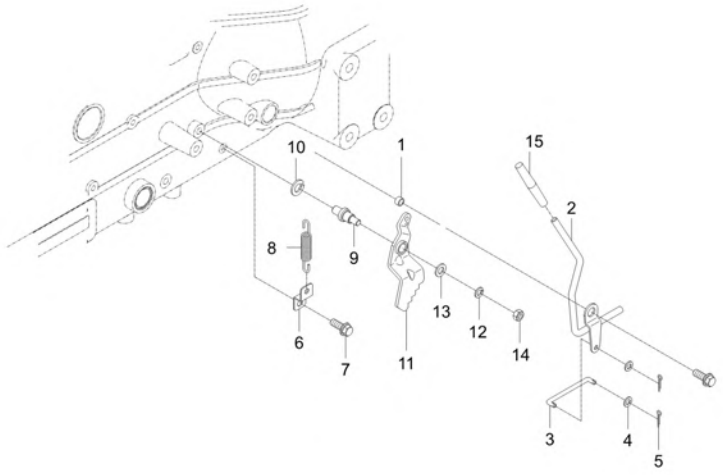

A : CK2610

No.	Part Number	Description	Qty A	Qty B	Qty C	Qty D	Qty E	I.C	Remark
1	T4620-80681	SPACER	1						
2	T5855-55425	LEVER, PARKING	1						
3	T5855-55431	ROD	1						T4.5
4	04012-50050	WASHER, PLAIN	2						M5
5	05511-50212	PIN,SPLIT	2						DIA2*12
6	T5250-68771	BRACKET	1						t1.6
7	01754-50616	BOLT, FLANGE v	1						M6XP1.0
8	T2440-28851	SPRING	1						
9	T2440-28822	BOLT, BRAKE LOCK	1						HEX17
10	04512-50100	SPRING WASHER	1						M10
11	T2440-28812	LOCK,BRAKE PEDAL	1						-
12	04512-50080	SPRING WASHER	1						M08
13	04013-50080	PLAIN WASHER	1						
14	02156-50080	NUT v	1						M8XP1.25
15	T2350-55922	GRIP	1						

----> Old replace New
<---- New replace Old
<-X-> Not interchangeable
<---> Interchangeable
<-O-> Interchangeable with another part(s)
* Please place an order assy(*)

https://tractormanualz.com/

TC2-G645501

DIFFERENTIAL PEDAL GROUP

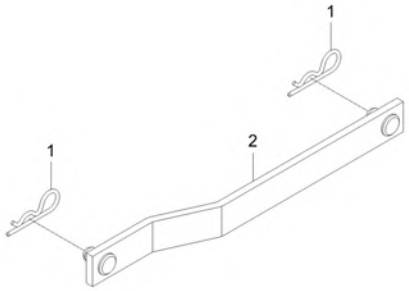

A : CK2610

No.	Part Number	Description	Qty A	Qty B	Qty C	Qty D	Qty E	I.C	Remark
1	05515-50800	PIN, SNAP	2						DIA8
2	T5855-57411	ROD, DIFFERENT LOCK	1						N

----> Old replace New
<----> Interchangeable
* Please place an order assy(*)
<---- New replace Old
<-O-> Interchangeable with another part(s)
<-X-> Not interchangeable

https://tractormanualz.com/

TC2-G646001

CLUTCH PEDAL GROUP

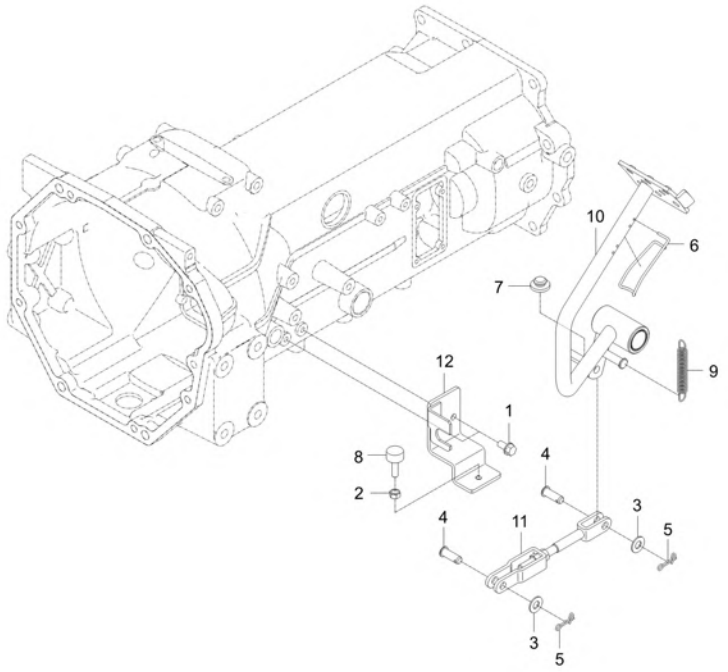

A : CK2610

No.	Part Number	Description	Qty A	Qty B	Qty C	Qty D	Qty E	I.C	Remark
1	01123-50816	Hex Head Cap Screw	2						M8XP1.25
2	02156-50080	NUT v	1						M8XP1.25
3	04013-50100	PLAIN WASHER	2						M10
4	05122-51028	PIN, JOINT v	2						DIA10XL28
5	05511-50318	PIN, SPLIT v	2						DIA2.7XL18
6	T2280-17981	SPRING v	1						DIA2.9
7	T2305-15871	RUBBER,CUSHION	1						
8	T2350-55881	BOLT ADJUSTING	1						
9	T4520-26161	SPRING, BRAKE	1						DIA2.5
10	T5815-55615	PEDAL, CLUTCH	1						-
11	T5855-55623	ROD, CLUTCH	1						-
12	T5855-55643	BRACKET, STOPPER	1						-

----> Old replace New <---- New replace Old <-X-> Not interchangeable
<---> Interchangeable <-O-> Interchangeable with another part(s)
* Please place an order assy(*)

https://tractormanualz.com/

TC2-G646502

BRAKE PEDAL GROUP

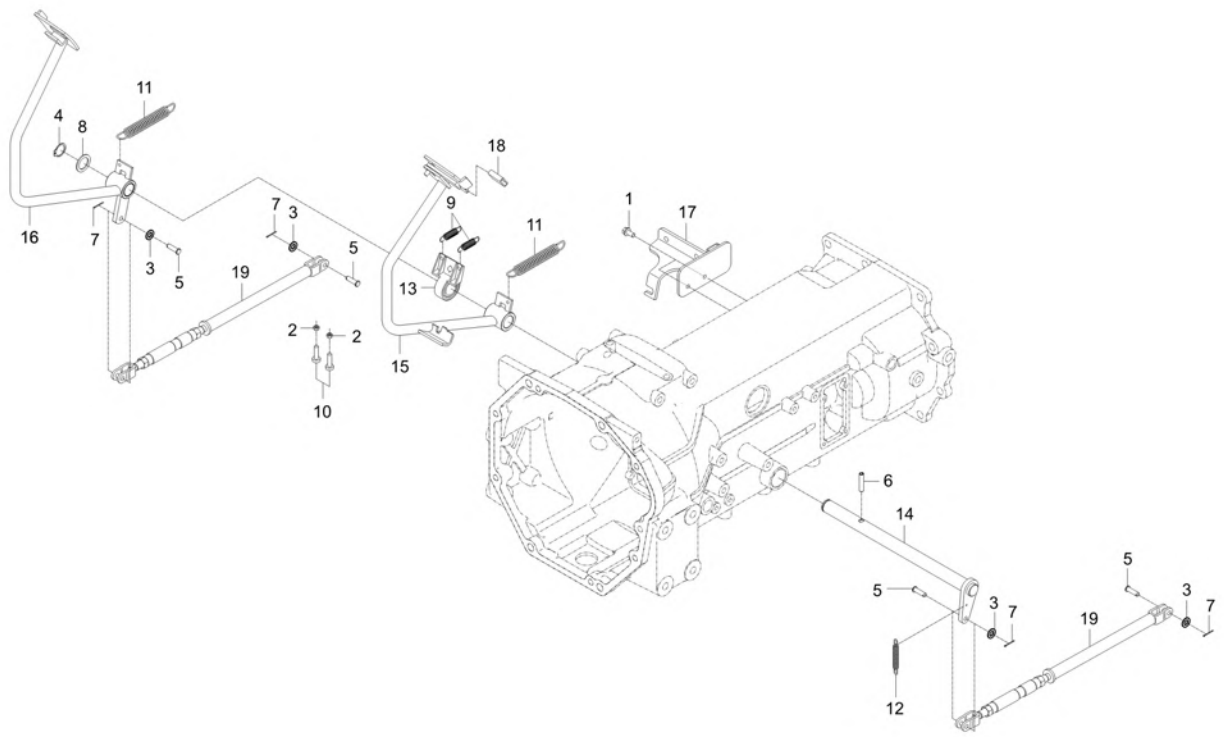

A : CK2610

No.	Part Number	Description	Qty A	Qty B	Qty C	Qty D	Qty E	I.C	Remark
1	01123-50816	Hex Head Cap Screw	2						M8XP1.25
2	02156-50080	NUT v	1						M8XP1.25
3	04013-50080	PLAIN WASHER	4						
4	04612-00250	CIR-CLIP	1						DIA25
5	05122-50828	PIN,JOINT	4						DIA8XL28
6	05411-00840	PIN, SPRING	1						DIA8.6XL40
7	05511-50220	PIN, SPLIT	4						DIA1.8XL20
8	32150-2846-1	COLLAR, BRAKE	1						T2*41*41
9	T2305-26641	SPRING, DIFF.LOCK PEDAL	2						DIA1.2
10	T2350-55881	BOLT ADJUSTING	1						
11	T4520-26161	SPRING, BRAKE	2						DIA2.5
12	T4520-27831	SPRING	1						DIA2.0
13	T5210-55742	PLATE,SWITCH	1						
14	T5815-55213	SHAFT	1						-
15	T5815-55222	PEDAL ,BRAKE LH	1						
16	T5815-55232	PEDAL, BRAKE RH	1						
17	T5815-55243	BRACKET,SPRING	1						
18	T5815-55291	VINYL TUBE	1 ~ SL9400358						OD17XT2.0

----> Old replace New <---- New replace Old <-X-> Not interchangeable
<---> Interchangeable <-O-> Interchangeable with another part(s)
* Please place an order assy(*)

https://tractormanualz.com/

TC2-G646502

BRAKE PEDAL GROUP

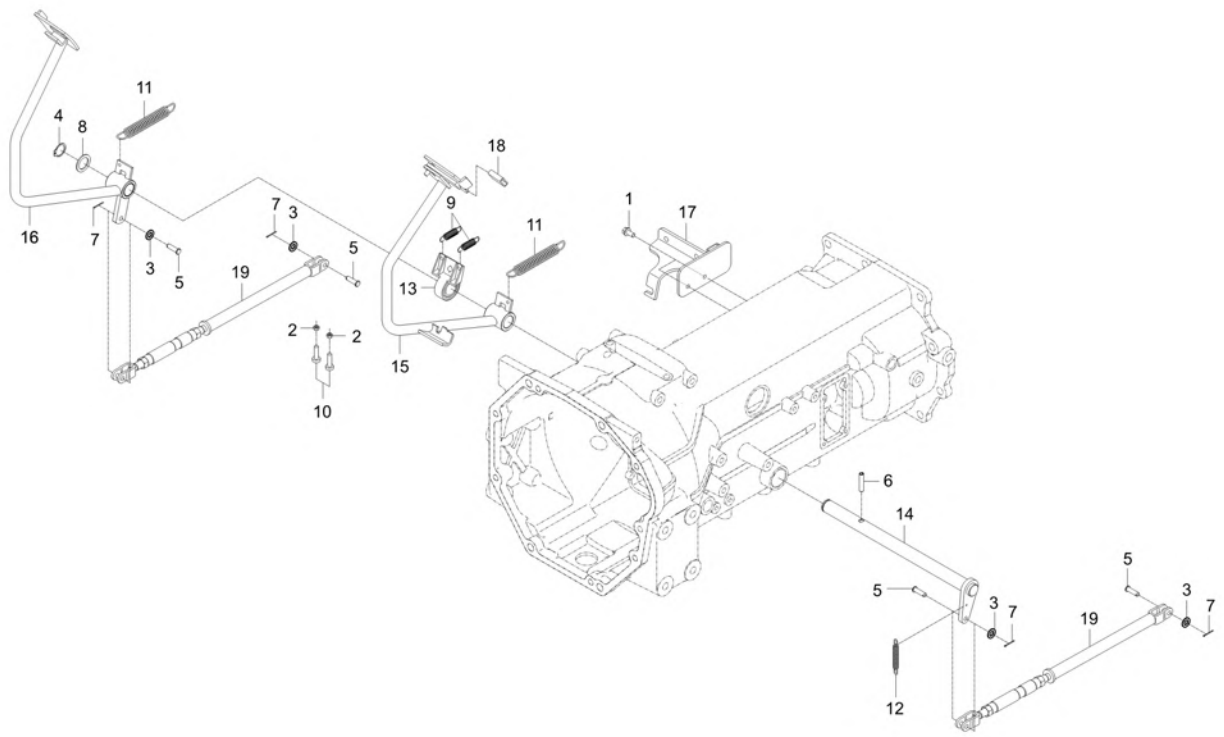

A : CK2610

No.	Part Number	Description	Qty A	Qty B	Qty C	Qty D	Qty E	I.C	Remark
18	TG16-0800A	TUBE, PROTECTION	1 SL9400359 ~ WL9400080					<----->	O.D18 x 1.5t
19	T5855-55271	ROD, BRAKE	2						-

----> Old replace New
<---> Interchangeable
* Please place an order assy(*)
<---- New replace Old
<-O-> Interchangeable with another part(s)
<-X-> Not interchangeable

https://tractormanualz.com/

TC2-G653004

STEERING COLUMN GROUP

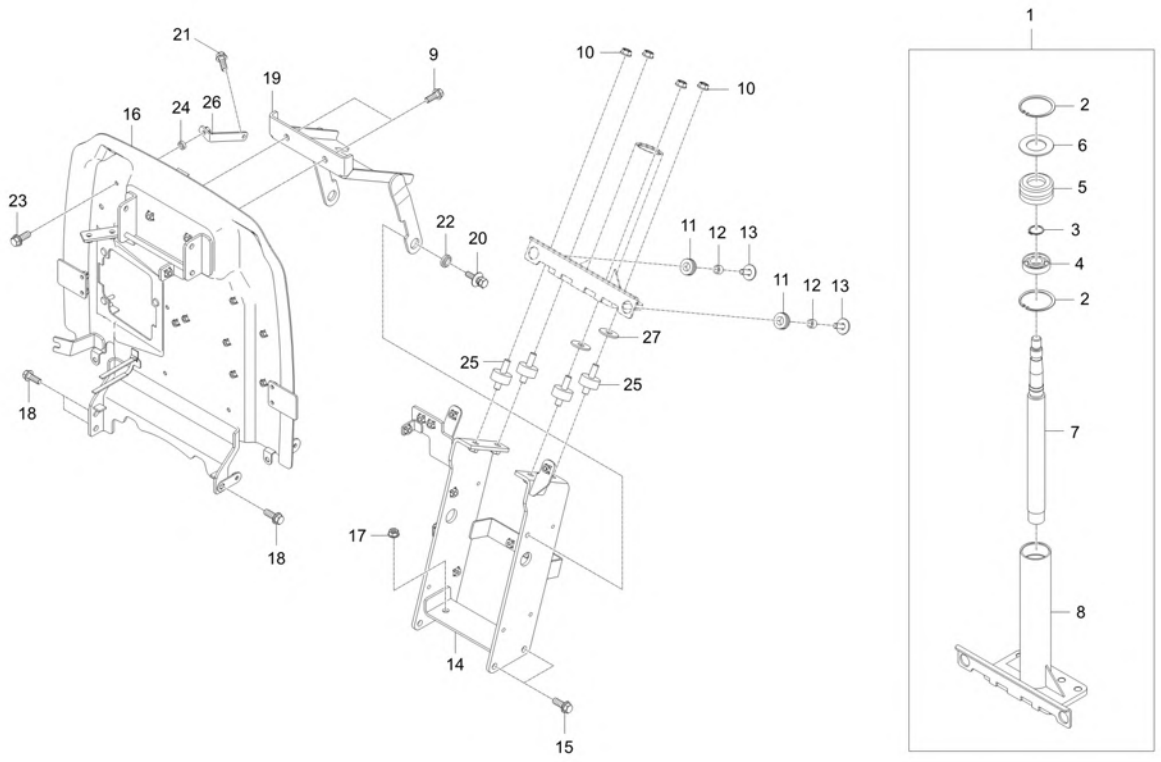

A : CK2610

No.	Part Number	Description	Qty A	Qty B	Qty C	Qty D	Qty E	I.C	Remark
1	T5855-60003	ASSY STEERING COLUMN	1						-
2	04611-00420	SNAP RING	2						
3	04612-00170	CIR-CLIP	1						DIA17
4	08141-06003	BEARING, BALL v	1						#6003DD
5	T2555-66142	RUBBER, STEERING WHEEL	1						N
6	T2555-66151	SPACER	1						N
7	T5855-60012	SHAFT	1						DIA 20
8	T5855-60023	COLLUM,STEERING	1						-
9	01754-50816	BOLT, FLANGE	4						M8XP1.25
10	02771-50100	NUT	4						M10*1.25
11	T2350-50431	GROMMET	2						
12	T2350-50421	SPACER	2						DIA13.8XT2.3
13	01127-50825	BOLT	2						M8XP1.25
14	T5855-60034	SUPPORT,STEERING COLOUM	1						-
15	01133-51020	BOLT	4						M10XP1.25
16	T5855-60044	PLATE, INTERCEPTION	1 ~ RL9400002						-
16	T5855-60045	PLATE, INTERCEPTION	1 RL9400003 ~ TL9400100					<------	-
16	T5855-60046	PLATE, INTERCEPTION	1 TL9400101 ~ VL9400206					<------	-

----> Old replace New <---- New replace Old <-X-> Not interchangeable
<---> Interchangeable <-O-> Interchangeable with another part(s)
* Please place an order assy(*)

https://tractormanualz.com/

TC2-G653004

STEERING COLUMN GROUP

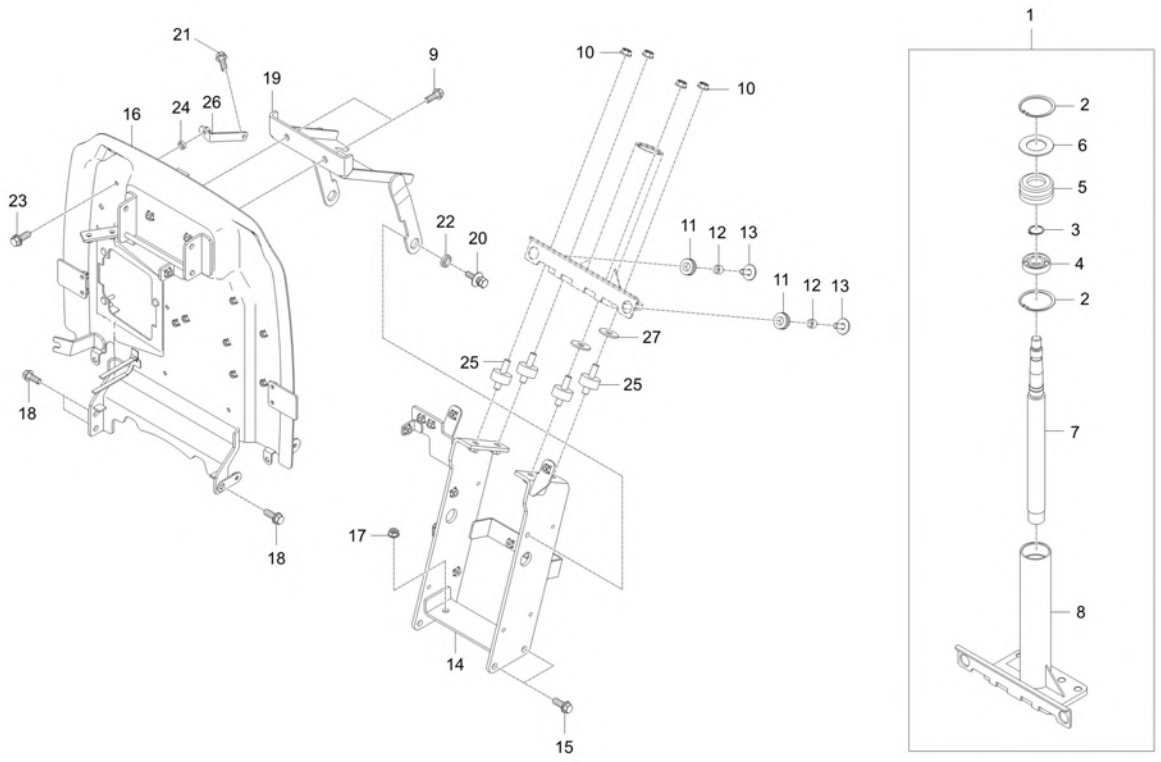

A : CK2610

No.	Part Number	Description	Qty A	Qty B	Qty C	Qty D	Qty E	I.C	Remark
16	T5855-60047	PLATE, INTERCEPTION	1 VL9400207 ~ WL9400080					<------	-
17	02783-50100	FLANGE NUT	2						
18	01133-51020	BOLT	3						M10XP1.25
19	T5855-60053	SUPPORT	1						-
20	01127-50825	BOLT	2						M8XP1.25
21	01754-50820	BOLT, FLANGE	4 RL9400001 ~ SL9400102						M8XP1.25
21	01754-50816	BOLT, FLANGE	1 RL9400001 ~ VL9400230					<----->	M8XP1.25
22	T5520-80531	BUSHING	2						
23	01754-50822	BOLT, FLANGE	1						M8XP1.25
23	01754-50820	BOLT, FLANGE	1					<------	M8XP1.25
23	01754-50816	BOLT, FLANGE	1					<----->	M8XP1.25
24	T4620-80681	SPACER	1						
25	T5520-80391	DUSTPROOF RUBBER	4						
26	TC26-0040A	BRACKET	1 ~ SL9400102						
26	TC26-0040B	BRACKET	1 SL9400103 ~ WL9400080					<----->	
27	04011-50100	PLAIN WASHER	2						M10

----> Old replace New
<----> Interchangeable
* Please place an order assy(*)
<---- New replace Old
<-O-> Interchangeable with another part(s)
<-X-> Not interchangeable

https://tractormanualz.com/

TC2-G655003

INSTRUMENT COVER GROUP

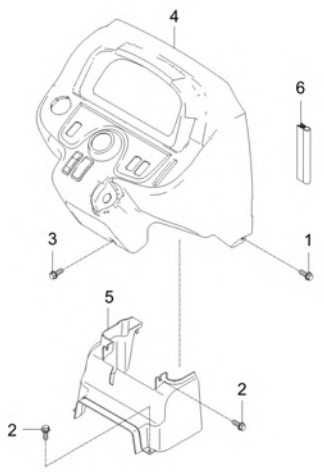

A : CK2610

No.	Part Number	Description	Qty A	Qty B	Qty C	Qty D	Qty E	I.C	Remark
1	01025-50620	BOLT, WASHER	5						M6XP1.0
2	01754-50616	BOLT, FLANGE v	4						M6XP1.0
3	01754-50625	BOLT, FLANGE	1						M6XP1.0
4	T5855-60515	DASH BOARD dnr v	1						-
4	T5855-60516	DASH BOARD v	1 RL9400001 ~ WL9400080					<----->	-
5	T5855-60542	UNDER COVER	1						T3.0
6	TC26-0082A	WEATHERSTRIP v	1						

----> Old replace New
<---- New replace Old
<-X-> Not interchangeable
<---> Interchangeable
<-O-> Interchangeable with another part(s)
* Please place an order assy(*)

https://tractormanualz.com/

TC2-G681004

LOWER LINK GROUP

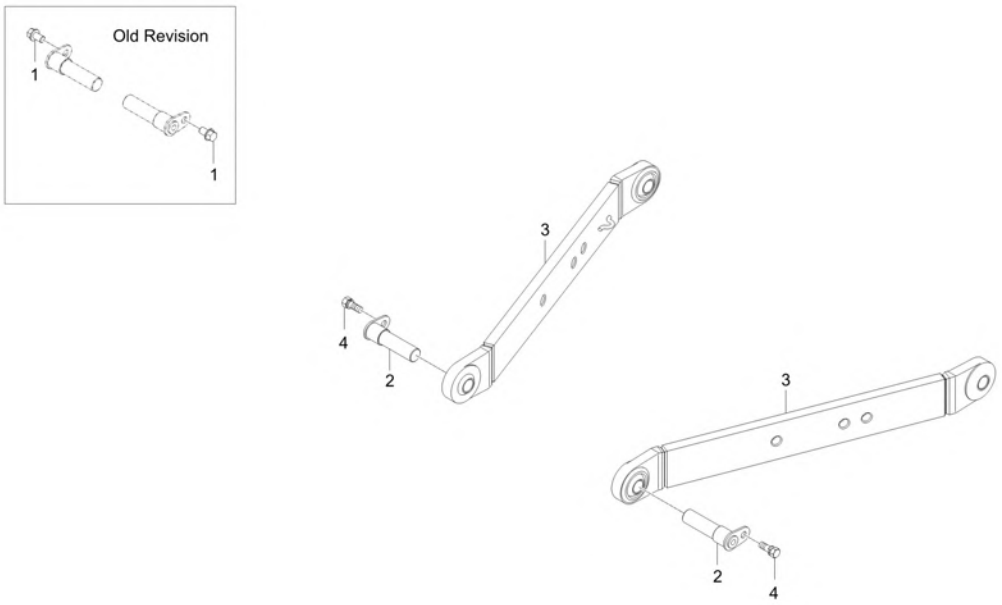

A : CK2610

No.	Part Number	Description	Qty A	Qty B	Qty C	Qty D	Qty E	I.C	Remark
1	01123-50816	Hex Head Cap Screw	2						M8XP1.25
2	T2445-29822TP	PIN-LOWER LINK	2						
3	T5855-65312	LOWER LINK ASSY	2 RL9400001 ~ TL9400056						-
3	TC26-1297A	ASSY LINK, LOWER	2 TL9400057 ~ WL9400080					<----->	
4	01123-50822	WASHER BOLT	2						M8XP1.25

----> Old replace New
<---- New replace Old
<-X-> Not interchangeable
<---> Interchangeable
<-O-> Interchangeable with another part(s)
* Please place an order assy(*)

https://tractormanualz.com/

TC2-G682005

CHECK LINK GROUP

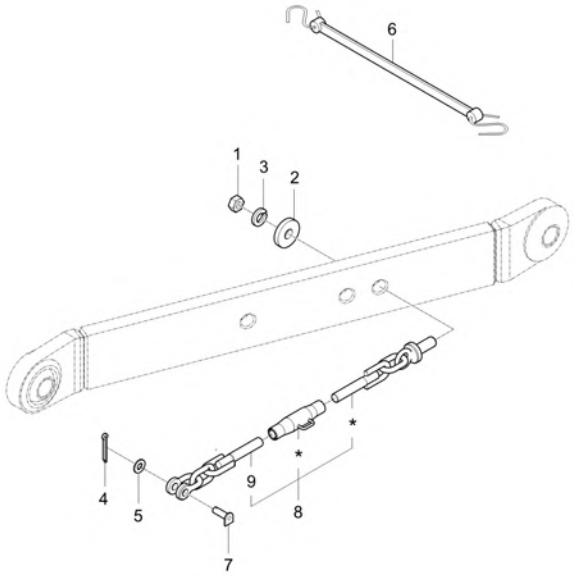

A : CK2610

No.	Part Number	Description	Qty A	Qty B	Qty C	Qty D	Qty E	I.C	Remark
1	02076-50140	NUT	2						M14XP1.5
2	04013-50140	PLAIN WAHSER	2						M14
3	04512-50140	SPRING WASHER	2						M14
4	05515-51000	Split Pin	2 ~ TL9400308						DIA10
4	05511-50325	PIN, SPLIT v	2 TL9400309 ~ WL9400080					<------	
5	T2350-71831TP	COLLAR	2						
6	T2610-21321	ASSY,CHECK LINK(RUBBER)	1						
7	T5855-65351TP	PIN, CHECK CHAIN	2						-
8	TC26-0015A	ASSY CHAIN, CHECK	2						
9	T2540-71811	CHAIN,CHECK (FRONT)	1						

----> Old replace New
<---- New replace Old
<-X-> Not interchangeable
<---> Interchangeable
<-O-> Interchangeable with another part(s)
* Please place an order assy(*)

https://tractormanualz.com/

TC2-G683002

TOP LINK GROUP

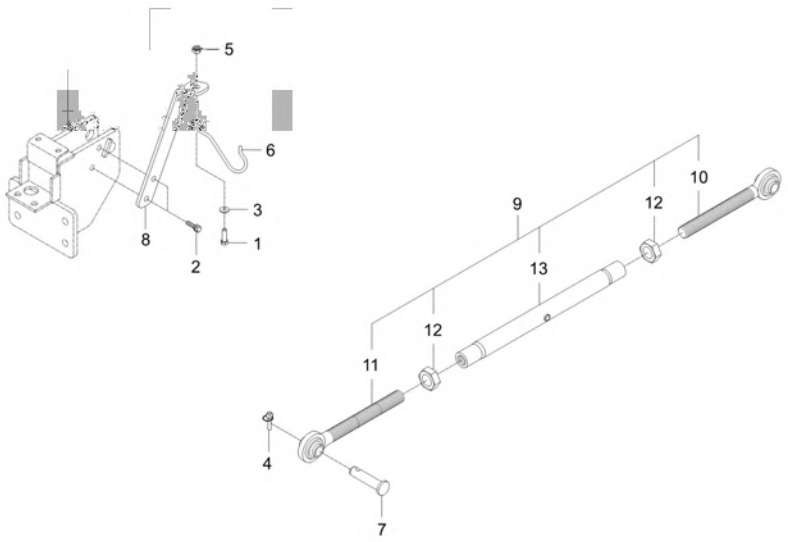

A : CK2610

No.	Part Number	Description	Qty A	Qty B	Qty C	Qty D	Qty E	I.C	Remark
1	01123-50818	BOLT, WASHER	2						M8XP1.25
2	01774-51030	FLANGE BOLT	1						
3	04013-50100	PLAIN WASHER	1						M10
4	34150-3764-4TP	PIN,CLIP	1						DIA10.0
5	41182-5151-1	NUT, REMOVE CHECK	1						DIA10
6	T5410-48081	CLIP,TOP LINK	1						
7	T5710-37631	PIN TOP LINK	1						
8	TC26-0032A	HOLDER, TOP LINK	1						
9	TC26-0068A	ASSY, TOP LINK v	1 ~ TL9400048						-
9	TC26-1296A	Use TC26-0068A dnr v	1 TL9400049 ~ WL9400080					<----->	
10	32240-7121-4	TOP LINK JOINT RH	1						
11	32240-7122-4	USE 32240-71224	1						
12	32244-7118-2	NUT,TOP LINK	1						M24P3.0
13	TC26-0069A	BODY, TOP LINK	1						

----> Old replace New
<---- New replace Old
<-X-> Not interchangeable
<---> Interchangeable
<-O-> Interchangeable with another part(s)
* Please place an order assy(*)

https://tractormanualz.com/

TC2-G684003

LIFT ROD GROUP

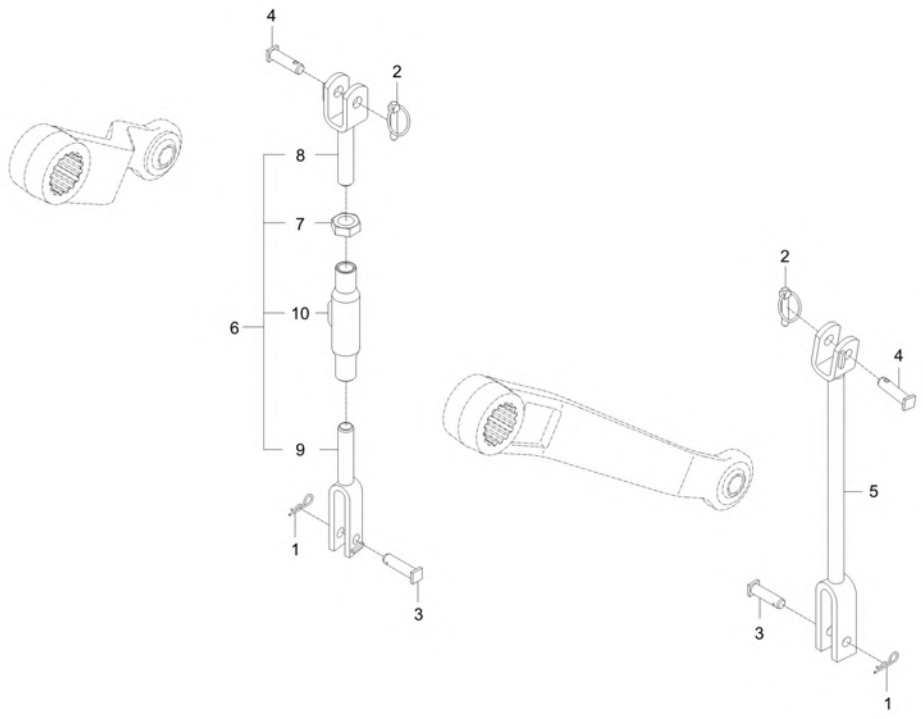

A : CK2610

No.	Part Number	Description	Qty A	Qty B	Qty C	Qty D	Qty E	I.C	Remark
1	05515-51600	PIN, SNAP	2						DIA16
2	34150-3764-4TP	PIN,CLIP	2						DIA10.0
3	T4363-71581TP	PIN	2						
4	T4620-85471TP	PIN, LIFT ROD	2						
5	T5855-65032	LIFT ROD,LH	1						-
6	T5855-65042	LIFT ROD,RH	1						-
7	35110-7157-2	NUT	1						-
8	T5855-65051	ROD ASSY, LIFT	1						
9	T5855-65061	ROD, LIFT LWR	1						
10	T5855-65072	BODY, LIFT ROD	1						-

----> Old replace New
<---- New replace Old
<-X-> Not interchangeable
<---> Interchangeable
<-O-> Interchangeable with another part(s)
* Please place an order assy(*)

https://tractormanualz.com/

TC2-G692010

DRAWBAR GROUP

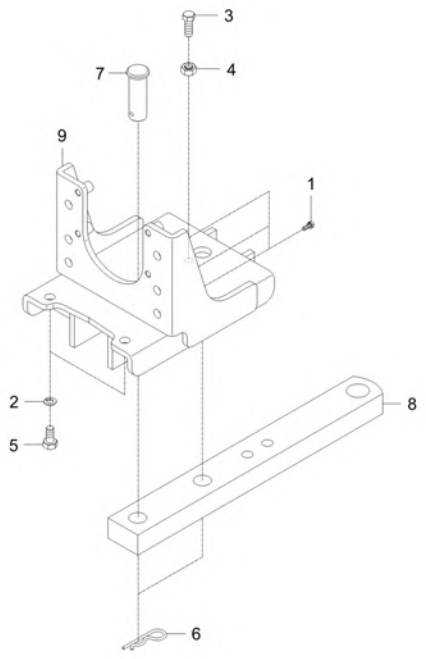

A : CK2610

No.	Part Number	Description	Qty A	Qty B	Qty C	Qty D	Qty E	I.C	Remark
1	01133-51025	BOLT	6						M10XP1.25
2	01173-51430	BOLT	2						M14P1.5*30
3	01175-51030	BOLT	1						
4	02176-50100	NUT v	1						M10XP1.25
5	04512-50140	SPRING WASHER	2						M14
6	70515-1633-4TP	CIR CLIP	2						DIA5.0
7	T2445-29781TP	PIN, JOINT	2						DIA25
8	T2611-29731	DRAW BAR v	1						
9	T5855-65913	DRAW BAR FRAME	1						-

----> Old replace New
<---- New replace Old
<-X-> Not interchangeable
<---> Interchangeable
<-O-> Interchangeable with another part(s)
* Please place an order assy(*)

https://tractormanualz.com/

TC2-G6F6501

REFLECTOR GROUP

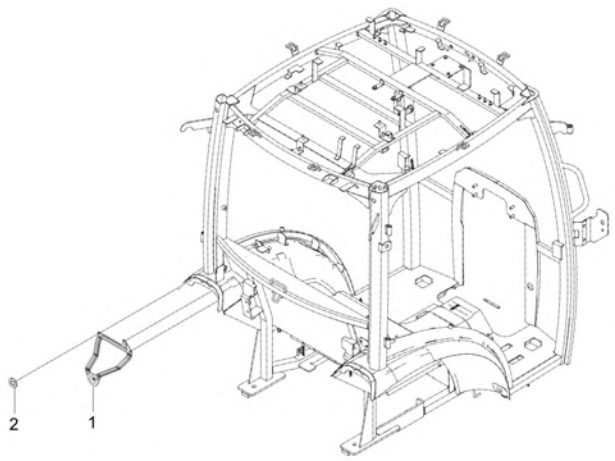

A : CK2610

No.	Part Number	Description	Qty A	Qty B	Qty C	Qty D	Qty E	I.C	Remark
1	TC26-1443A	BRACKET, REFLECTOR	2 TL9400101 ~ UL9400064						T4.5
1	TC26-1614A	BRAC KET, REFLECTOR - PRESS	2 UL9400065 ~ WL9400080					<------	T1.2
2	04015-50060	WASHER, PLAIN	2						M6

----> Old replace New
<---> Interchangeable
* Please place an order assy(*)
<---- New replace Old
<-O-> Interchangeable with another part(s)
<-X-> Not interchangeable

https://tractormanualz.com/

TC2-G6D5024

LABEL GROUP(LK2610)

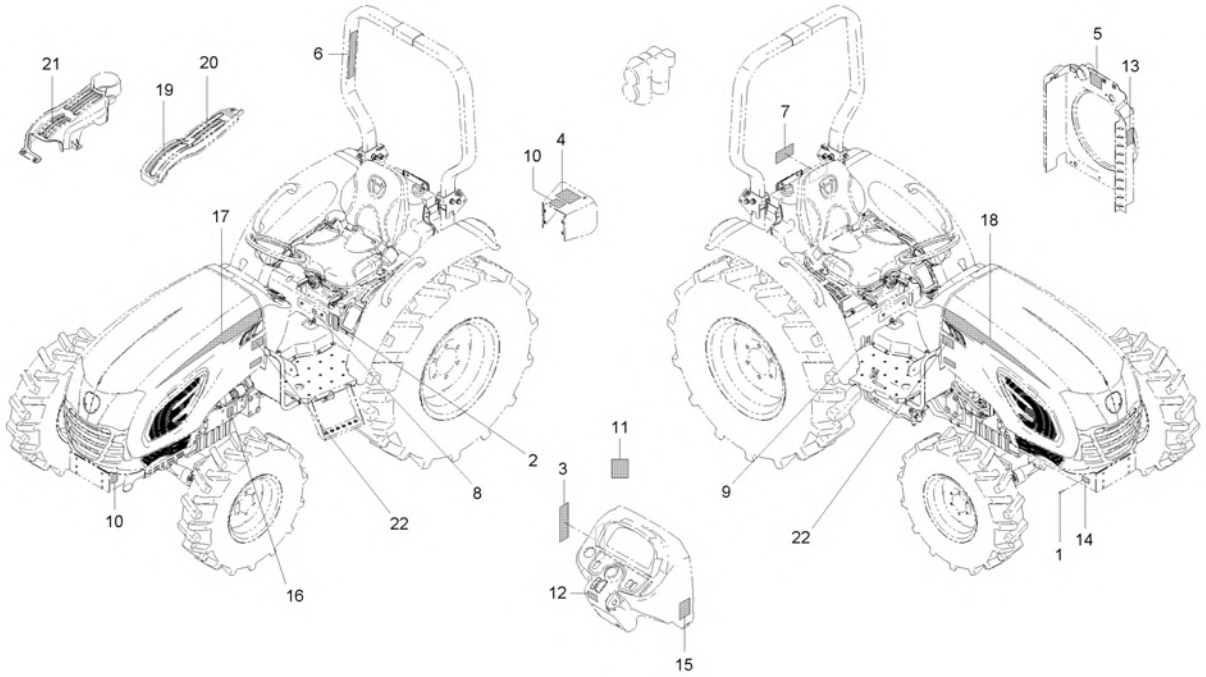

A : CK2610

No.	Part Number	Description	Qty A	Qty B	Qty C	Qty D	Qty E	I.C	Remark
1	05624-20408	RIVET	4						
2	T2241-50311	NAME,PLATE	1						
3	T2555-52141	LABEL,CAUTION	1						
4	T2555-52262	LABEL, CAUTION	1						
5	T2555-52282	LABEL RADIATOR v	1						
6	T2555-52353	ROPS LABEL	1						
7	TC26-0388A	LABEL, WARNING FUELING	1						
8	T2610-52461	LABEL, SPEED CONTROL	1						
9	T2611-26693	LABEL, DIFFERENTIAL FIXING	1						
10	T2615-55112	LABEL, MUFFLER CAUTION	1						
11	T4025-57521	DECAL PARK BRAKE	1						
12	T4182-53191	LABEL, WARNING	1						
13	T4625-52351	LABEL, FAN CAUTION	1						
14	T4935-52011	NAME PLATE	1						T0.5
15	T4938-52351	LABEL, BRAKE REMINDER	1						
16	T4938-53551	LABEL	1						
17	T5715-55411	BRAND LABEL, LH	1						
18	T5715-55431	BRAND LABEL, RH	1						

----> Old replace New
<---- New replace Old
<-X-> Not interchangeable
<---> Interchangeable
<-O-> Interchangeable with another part(s)
* Please place an order assy(*)

https://tractormanualz.com/

TC2-G6D5024

LABEL GROUP(LK2610)

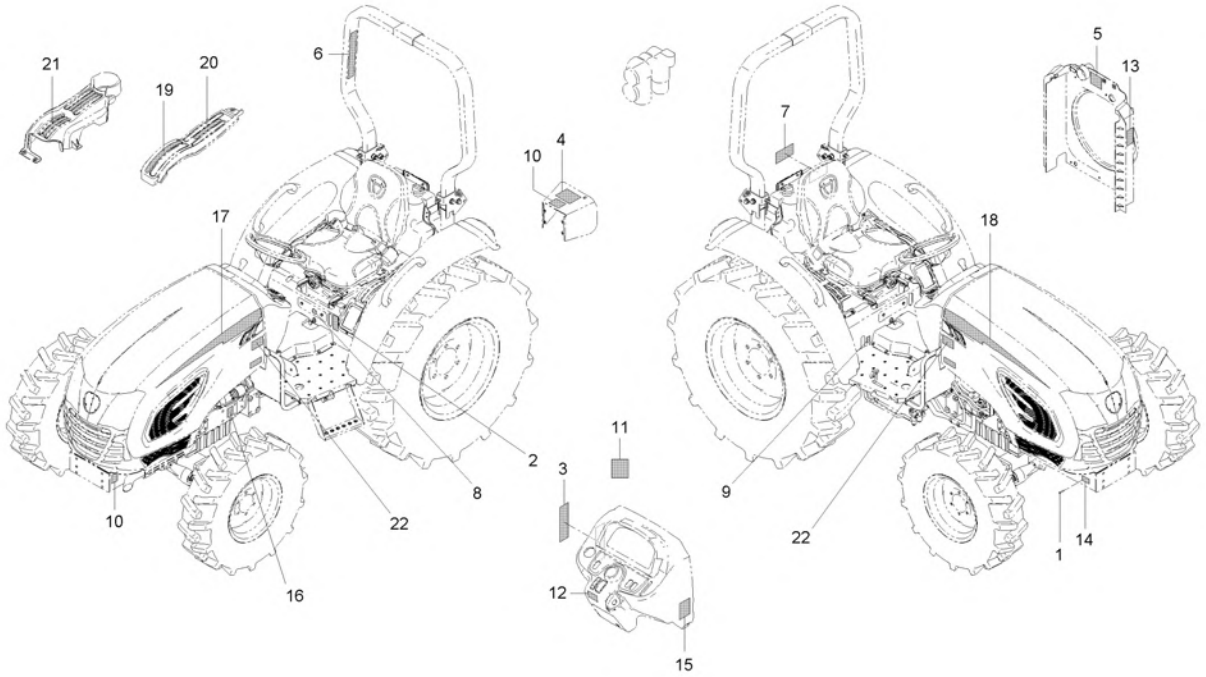

A : CK2610

No.	Part Number	Description	Qty A	Qty B	Qty C	Qty D	Qty E	I.C	Remark
19	T5855-67422	LABEL	1						
20	T5855-67431	LABEL, PTO LEVER	1						
21	T5855-67441	LABEL, POSITION&RAFTLEVER	1						
22	TB16-0003A	LABEL MODEL -CK2610	2						

----> Old replace New
<----> Interchangeable
* Please place an order assy(*)
<---- New replace Old
<-O-> Interchangeable with another part(s)
<-X-> Not interchangeable

https://tractormanualz.com/

TC2-G612005

MUFFLER GROUP

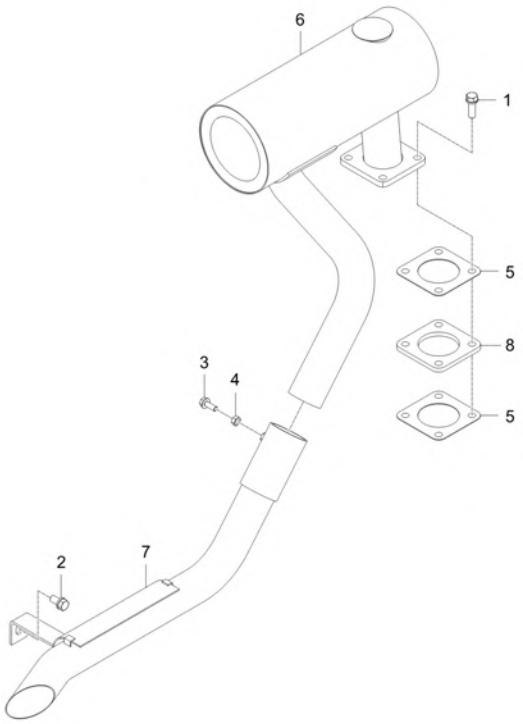

A : CK2610

No.	Part Number	Description	Qty A	Qty B	Qty C	Qty D	Qty E	I.C	Remark
1	01123-50825	BOLT WITH WASHER	4						M8XP1.25
2	01125-50820	BOLT, WASHER	1						M8XP1.25
3	01754-50616	BOLT, FLANGE v	1						M6XP1.0
4	02056-50060	NUT	1						M6XP1.0
5	E5800-12373	GASKET v	2						T0.5
6	T4665-12111	MUFFLER	1						
7	TC26-0338A	PIPE, EXHAUST	1						-
8	TC26-0114A	COLLAR	1						

----> Old replace New
<---- New replace Old
<-X-> Not interchangeable
<---> Interchangeable
<-O-> Interchangeable with another part(s)
* Please place an order assy(*)

https://tractormanualz.com/

TC2-G615506

BONNET GROUP

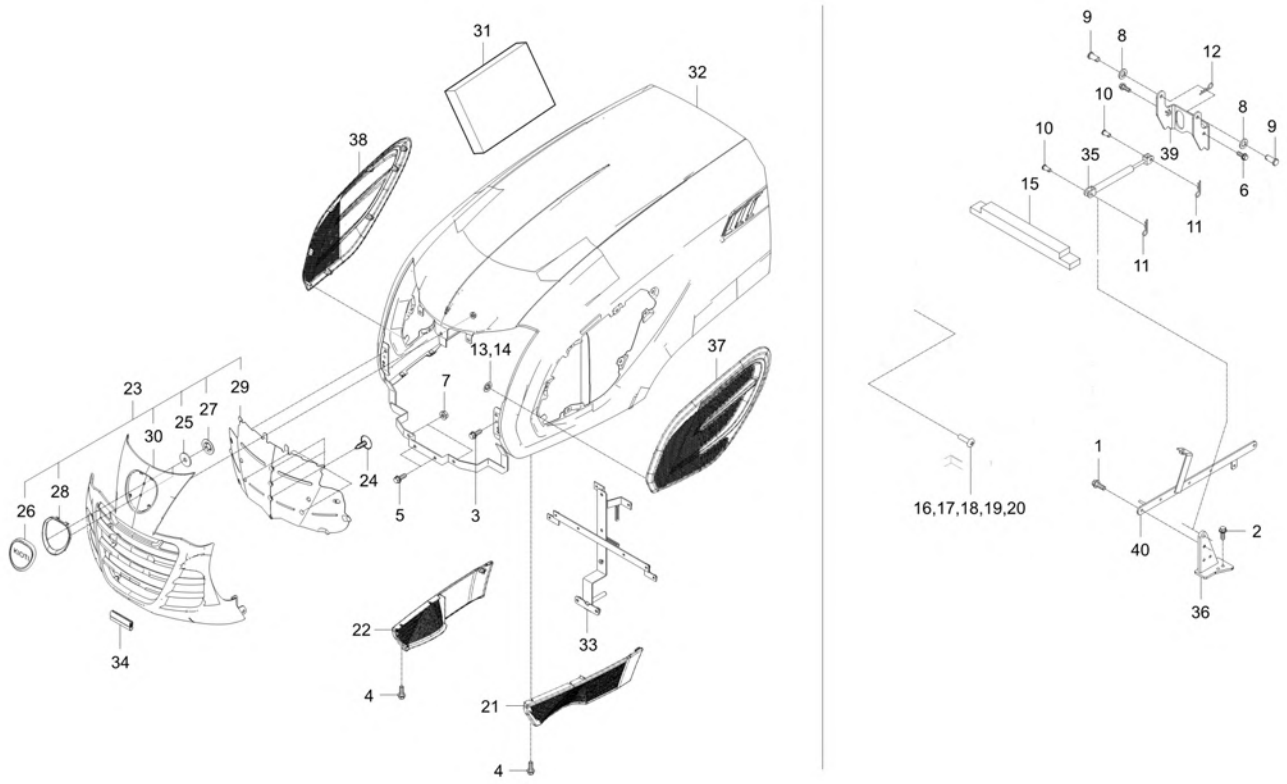

A : CK2610

No.	Part Number	Description	Qty A	Qty B	Qty C	Qty D	Qty E	I.C	Remark
1	01123-50820	BOLT, WASHER v	2						M8XP1.25
2	01123-50830	BOLT, WASHER v	4						M8P1.25*30
3	01754-50614	FLANGE BOLT	2						M6XP1.0
4	01754-50614	FLANGE BOLT	2						M6XP1.0
5	01754-50816	BOLT, FLANGE	3						M8XP1.25
6	01754-50820	BOLT, FLANGE	2						M8XP1.25
7	02751-50060	NUT, FLANGE	3						M6XP1.0
8	04011-50100	PLAIN WASHER	2						M10
9	05122-51020	PIN	2						DIA10*20
10	05122-51025	JOINT PIN	2						DIA10*25
11	05515-51000	Split Pin	2						DIA10
12	05515-51000	Split Pin	2						DIA10
13	T4620-50701	PLATE, FIXED	2						
14	T4620-50701	PLATE, FIXED	4						
15	T5525-50441	SPONGE	1 ~ VL9400344						
15	TC26-1801A	SPONGE	1 VL9400345 ~ WL9400080					<----->	
16	T5710-51181	SCREW	5						M5 X 10
17	T5710-51181	SCREW	5						M5 X 10

----> Old replace New
<----> Interchangeable
* Please place an order assy(*)
<---- New replace Old
<-O-> Interchangeable with another part(s)
<-X-> Not interchangeable

https://tractormanualz.com/

TC2-G615506

BONNET GROUP

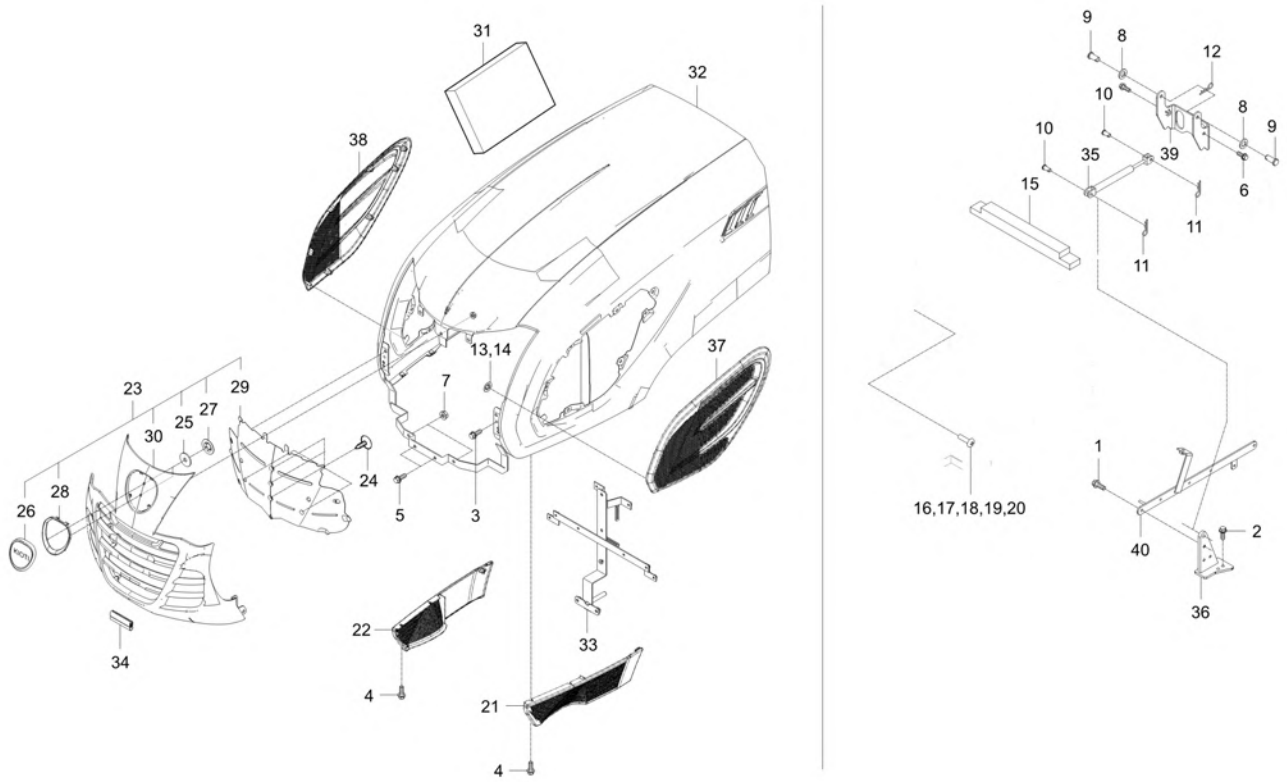

A : CK2610

No.	Part Number	Description	Qty A	Qty B	Qty C	Qty D	Qty E	I.C	Remark
18	T5710-51181	SCREW	3						M5 X 10
19	T5710-51181	SCREW	3						M5 X 10
20	T5710-51181	SCREW	6						M5 X 10
21	T5818-51051	SIDE GRILL, RH,LWR	1						T3.0
22	T5818-51061	SIDE GRILL, RH,LWR	1						T3.0
23	T5850-51851	FRONT GRILL ASSY	1						N
24	38430-1827-1	SCREW	20						-
25	82KC-0641	PLATE, RUBBER	2						
26	T2185-51462	EMBLEM	1						
27	T4620-50701	PLATE, FIXED	2						
28	T5710-51092	BEGEL, EMBLEM	1						N
29	T5818-51851	GRILLE,BONNET	1						N
30	T5858-51852	GRILL, BONNET	1						N
31	T5855-50542	SPONGE, 4	2						<F6>□<F>95 X60, T2
32	T5855-51815	USE T5855-51816 BONNET ASSY dnr v	1 RL9400003 ~ SL9400046						-
32	T5855-51816	ASSY BONNET v	1 SL9400047 ~ VL9400344					<----->	-
32	T5855-51816OE	TRK ASSY BONNET	1					<------	-
32	T5855-51817OE	ASSY BONNET	1					<----->	-

----> Old replace New
<---- New replace Old
<-X-> Not interchangeable
<---> Interchangeable
<-O-> Interchangeable with another part(s)
* Please place an order assy(*)

https://tractormanualz.com/

TC2-G615506

BONNET GROUP

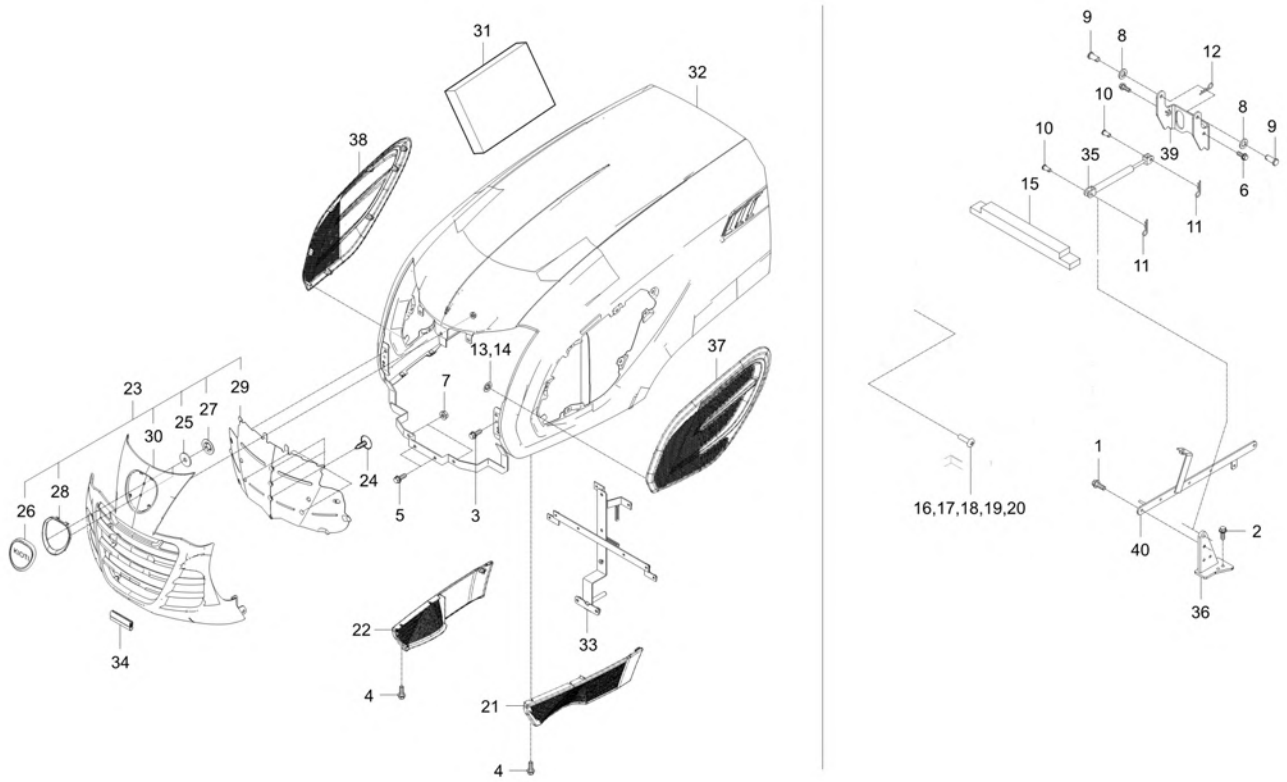

A : CK2610

No.	Part Number	Description	Qty A	Qty B	Qty C	Qty D	Qty E	I.C	Remark
33	T5855-51852	BONNET REINFORCED PLATE, FR	1						-
34	T5855-51861	RUBBER	1						
35	T5855-51881	ASS'Y, AIR CYLINDER	1						
36	T5858-51842	BRACKET	1						N
37	T5858-51862	BONNET SIDE GRILL, LH v	1						-
38	T5858-51872	BONNET SIDE GRILL, RH	1						-
39	T5858-51882	BONNET, HINGE BRACKET	1						-
40	T5858-51894	GUIDE, HARNESS	1						-

----> Old replace New
<----> Interchangeable
* Please place an order assy(*)
<---- New replace Old
<-O-> Interchangeable with another part(s)
<-X-> Not interchangeable

https://tractormanualz.com/

TC2-G635003

FENDER(ROPS) GROUP

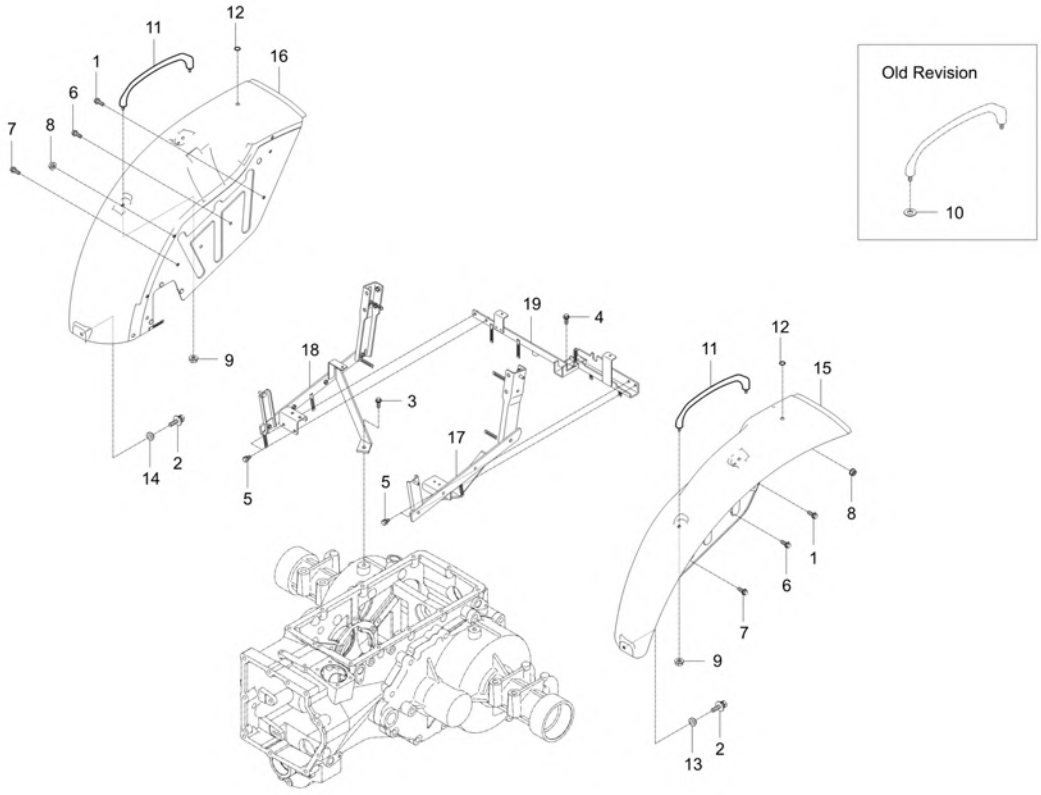

A : CK2610

No.	Part Number	Description	Qty A	Qty B	Qty C	Qty D	Qty E	I.C	Remark
1	01125-50825	WITH WASHER BOLT	2						M8XP1.25
2	01127-50825	BOLT	2						M8XP1.25
3	01133-51020	BOLT	2						M10XP1.25
4	01133-51035	WASHER BOLT	2						M10XP1.25
5	01754-50816	BOLT, FLANGE	4						M8XP1.25
6	01754-50816	BOLT, FLANGE	10						M8XP1.25
7	01754-50820	BOLT, FLANGE	4						M8XP1.25
8	02763-50080	FLANGE NUT	4						M8XP1.25
9	02763-50080	FLANGE NUT	4						M8XP1.25
10	T2610-95081	PLATE,RUBBER	4						T1.0
11	T2630-95052	GRIP	2						
12	T4260-87511	HOLE COVER	2						
13	T5520-80531	BUSHING	1						
14	T5520-80531	BUSHING	1						
15	T5855-61403	TRK-FENDER ASSY, LH dnr v	1 RL9400001 ~ SL9400214						-
15	T5855-61404	TRK - FENDER ASSY, LH dnr v	1 SL9400215 ~ TL9400272					<----->	-
15	T5855-61405OE	FENDER ASSY LH v	1 TL9400273 ~ VL9400344					<----->	-
16	T5855-61413	FENDER ASSY, RH dnr v	1 ~ RL9400002						-

----> Old replace New
<---- New replace Old
<-X-> Not interchangeable
<---> Interchangeable
<-O-> Interchangeable with another part(s)
* Please place an order assy(*)

https://tractormanualz.com/

TC2-G635003

FENDER(ROPS) GROUP

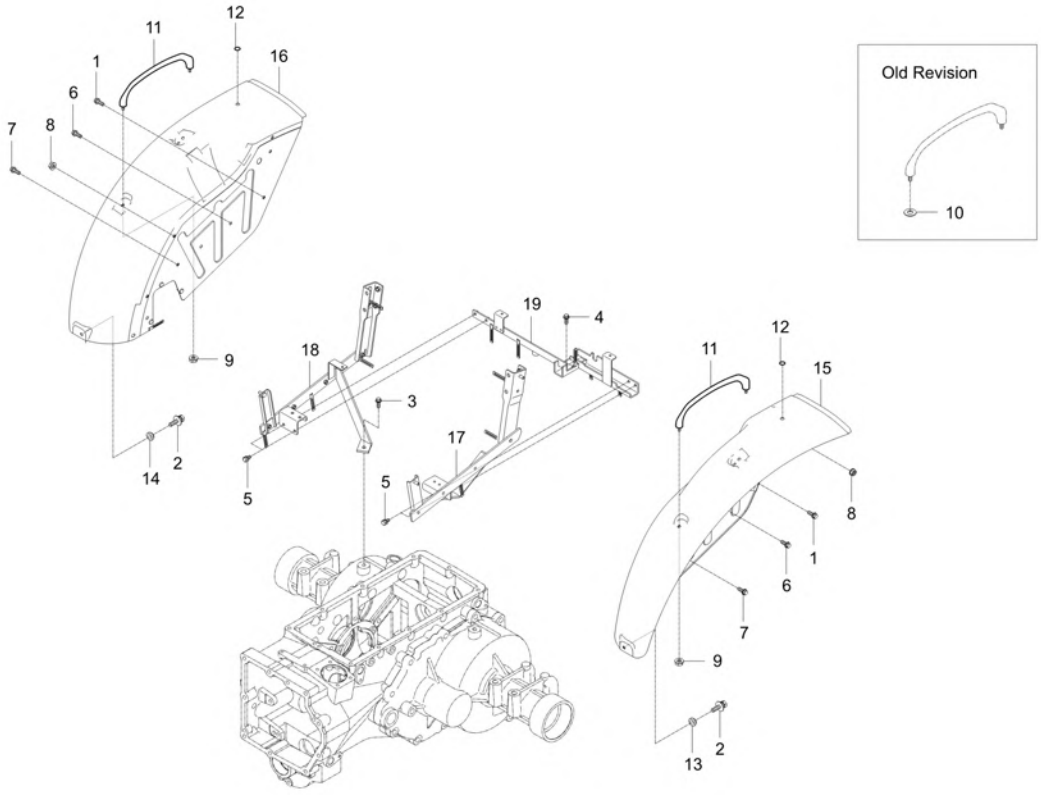

A : CK2610

No.	Part Number	Description	Qty A	Qty B	Qty C	Qty D	Qty E	I.C	Remark
16	T5855-61414	FENDER ASSY RH dnr v	1 RL9400003 ~ SL9400214					<----->	-
16	T5855-61415	TRK - FENDER ASSY, RH dnr v	1 SL9400215 ~ TL9400272					<----->	-
16	T5855-61416	FENDER ASSY, RH	1 TL9400273 ~					<------	-
16	T5855-61417OE	FENDER ASSY, RH v	1 UL9400001 ~ VL9400344					<----->	-
17	T5855-61713	SUPPORT LH, FENDER dnr v	1 ~ RL9400124						-
17	T5855-61714	SUPPORT LH, FENDER	1 SL9400001 ~ WL9400080					<----->	-
18	T5855-61723	SUPPORT RH, FENDER	1 ~ RL9400124						-
18	T5855-61724	SUPPORT RH, FENDER	1 SL9400001 ~ WL9400080					<----->	-
19	T5855-61732	SUPPORT, FENDER	1						-

----> Old replace New
<---- New replace Old
<-X-> Not interchangeable
<---> Interchangeable
<-O-> Interchangeable with another part(s)
* Please place an order assy(*)

https://tractormanualz.com/

TC2-G646602

BRAKE LOCK GROUP

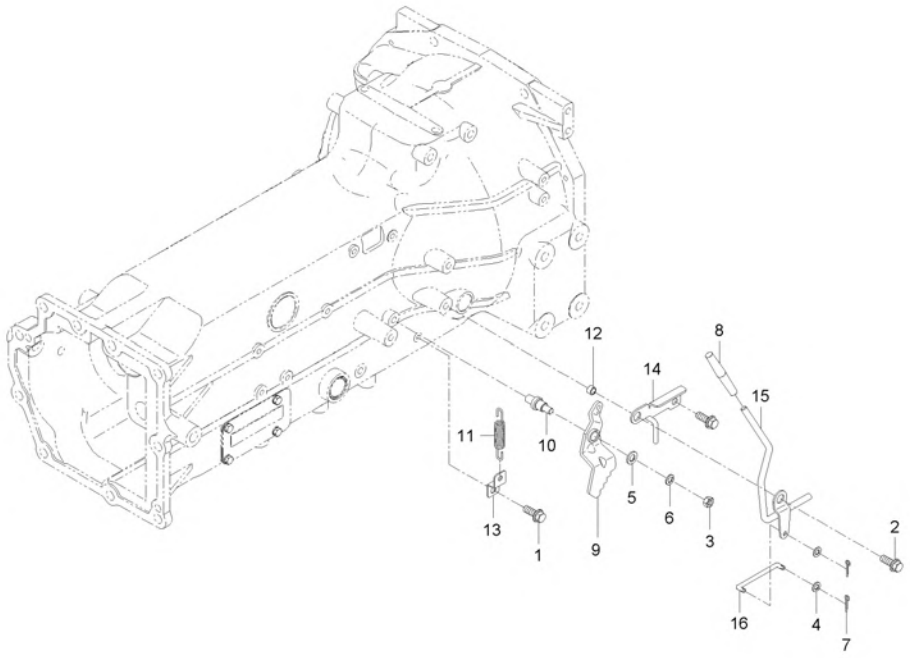

A : CK2610

No.	Part Number	Description	Qty A	Qty B	Qty C	Qty D	Qty E	I.C	Remark
1	01754-50616	BOLT, FLANGE v	1						M6XP1.0
2	01754-50816	BOLT, FLANGE	2						M8XP1.25
3	02156-50080	NUT v	1						M8XP1.25
4	04012-50050	WASHER, PLAIN	2						M5
5	04013-50080	PLAIN WASHER	1						
6	04512-50080	SPRING WASHER	1						M08
7	05511-50212	PIN,SPLIT	2						DIA2*12
8	T2350-55922	GRIP	1						
9	T2440-28812	LOCK,BRAKE PEDAL	1						-
10	T2440-28822	BOLT, BRAKE LOCK	1						HEX17
11	T2440-28851	SPRING	1						
12	T4620-80681	SPACER	1						
13	T5250-68771	BRACKET	1						t1.6
14	T5855-55412	BRACKET	1						-
15	T5855-55425	LEVER, PARKING	1						
16	T5855-55431	ROD	1						T4.5

----> Old replace New
<---- New replace Old
<-X-> Not interchangeable
<---> Interchangeable
<-O-> Interchangeable with another part(s)
* Please place an order assy(*)

https://tractormanualz.com/

TC2-G651002

STEERING WHEEL GROUP

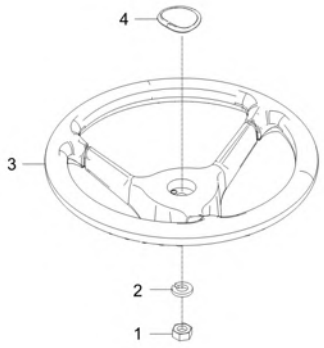

A : CK2610

No.	Part Number	Description	Qty A	Qty B	Qty C	Qty D	Qty E	I.C	Remark
1	02176-50120	NUT	1						M12XP1.25
2	04512-50120	SPRING WASHER	1						M12
3	T2555-55461	STEERING dnr v	1 ~ SL9400542						
3	T2555-55462	STEERING WHEEL v	1 SL9400543 ~ WL9400080					<----->	-
4	T5245-55461	CAP, HANDLE 3 sided v	1						
4	T5245-55462	CAP,HANDLE	1					<------	-

----> Old replace New
<---> Interchangeable
* Please place an order assy(*)
<---- New replace Old
<-O-> Interchangeable with another part(s)
<-X-> Not interchangeable

https://tractormanualz.com/

TC2-G662010

STEP MAT GROUP

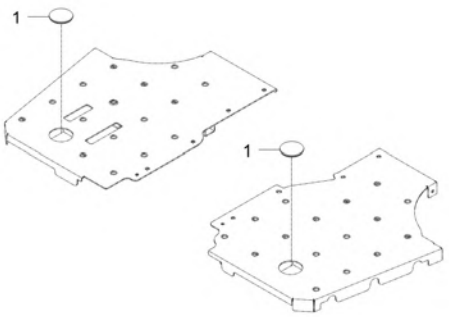

A : CK2610

No.	Part Number	Description	Qty A	Qty B	Qty C	Qty D	Qty E	I.C	Remark
1	T4686-51951	COVER	2						

----> Old replace New
<----> Interchangeable
* Please place an order assy(*)
<---- New replace Old
<-O-> Interchangeable with another part(s)
<-X-> Not interchangeable

https://tractormanualz.com/

TC2-G611006

AIR CLEANER GROUP

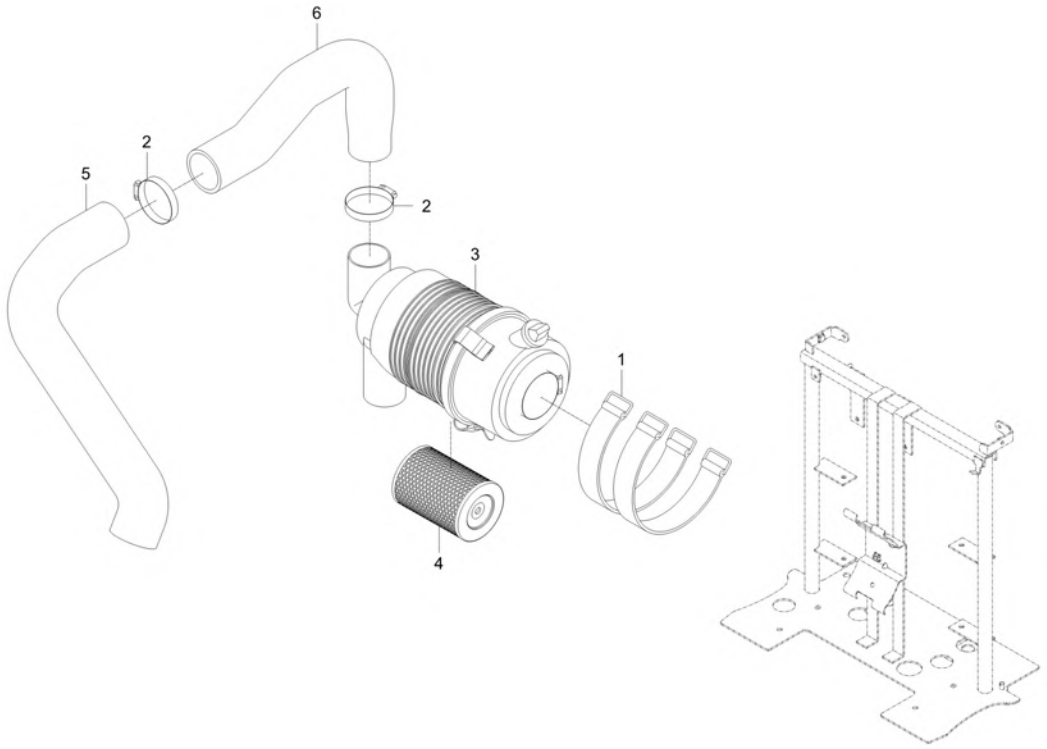

A : CK2610

No.	Part Number	Description	Qty A	Qty B	Qty C	Qty D	Qty E	I.C	Remark
1	38325-1398-1	BAND,AIR CLEANER	2						
2	KX97382-S51	ASSY, CLAMP v	4						DIA70스탠 76#
3	T4624-11012	FILTER, AIR ASSY CLEANER v	1						
4	E7230-11081	ELEMENT, FILTER ASSY 1 sp dnr v	1						
5	T5855-50012	HOSE, INLET	1						OD 75 / ID 63
6	TC26-0116A	HOSE, SUCTION	1						OD 72 / ID 60

----> Old replace New
<---- New replace Old
<-X-> Not interchangeable
<---> Interchangeable
<-O-> Interchangeable with another part(s)
* Please place an order assy(*)

https://tractormanualz.com/

TC2-G612503

RADIATOR GROUP

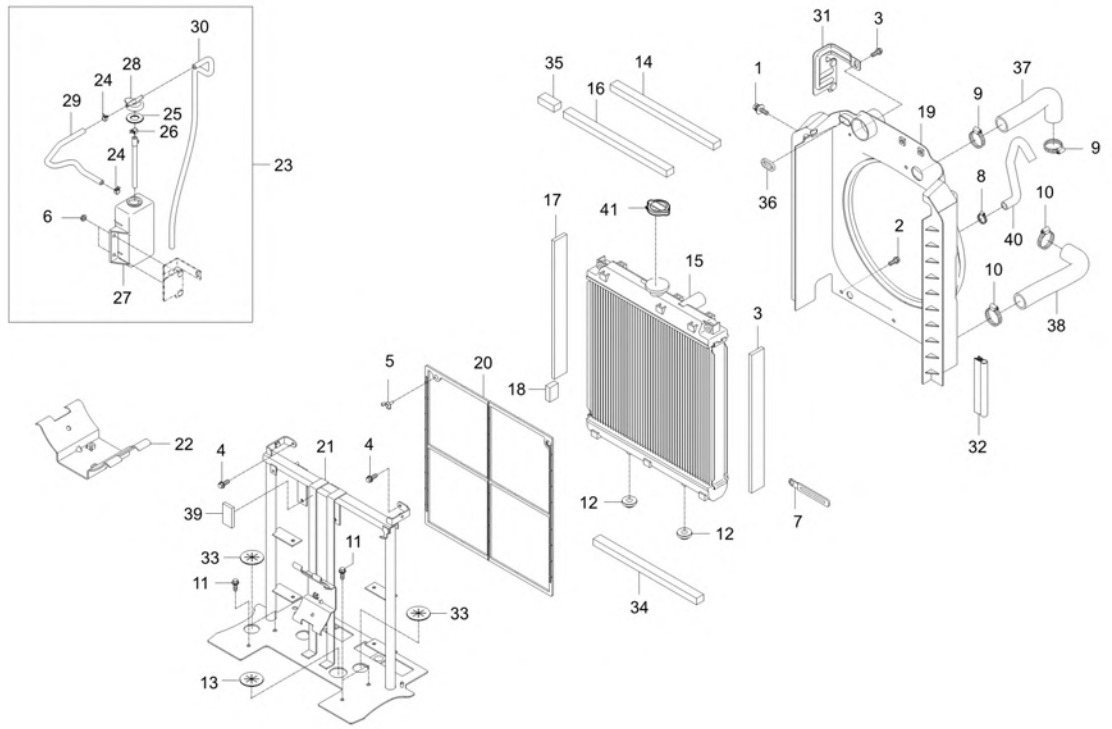

A : CK2610

No.	Part Number	Description	Qty A	Qty B	Qty C	Qty D	Qty E	I.C	Remark
1	01027-50616	BOLT, WASHER	2						
2	01754-50612	BOLT, FLANGE	5						M6XP1.0
3	01754-50614	FLANGE BOLT	1						M6XP1.0
4	01754-50622	BOLT FLANGE	2						
5	01811-50615	BOLT,WING	1						
6	02751-50080	FLANGE NUT 8MMX1.25P	2						M8XP1.25
7	37150-34471	CLAMP, CORD v	1						
8	66204-3623-1	BAND, HOSE	2						
9	E1500-18411	CLAMP BAND	2						
10	E1500-18411	CLAMP BAND	2						
11	T2185-70491	BOLT	4						
12	T4125-13561	CUSHION	2						
13	T4876-50251	SPONGE	1						
14	T4931-72091	SPONGE	2						
15	T5855-50411	RADIATOR ASSY dnr v	1						
15	TC26-1800A	ASSY RADIATOR-OS	1					<----->	-
16	T5855-50421	SOPNGE,1	1						20X26
17	T5855-50431	SPONGE,2	2						45X10XL

----> Old replace New
<----> Interchangeable
* Please place an order assy(*)
<---- New replace Old
<-O-> Interchangeable with another part(s)
<-X-> Not interchangeable

https://tractormanualz.com/

TC2-G612503

RADIATOR GROUP

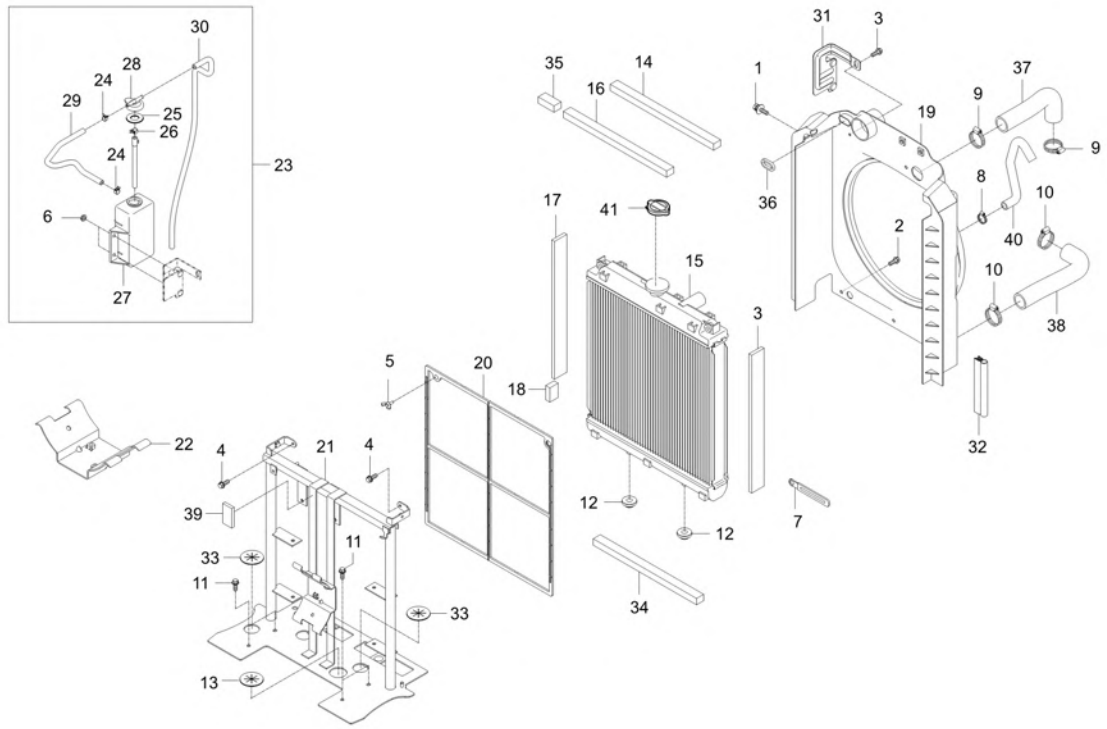

A : CK2610

No.	Part Number	Description	Qty A	Qty B	Qty C	Qty D	Qty E	I.C	Remark
18	T5855-50441	SPONGE,3	1						45X30XL
19	T5855-50453	SHROUD	1						-
19	T5855-50454	SHROUD	1					<----->	-
20	T5855-50462	Net-Radiator	1						N
21	T5855-50513	SUPPORT RADIATOR	1 ~ VL9400024						-
21	T5855-50514	RADIATOR SUPPORT v	1 VL9400025 ~ WL9400080					<----->	-
22	38325-1394-1	HOLDER, AIR CLEANER	1						
23	T5855-50522	RESOVOIR TANK	1						-
24	14911-4275-1	CLIP, TUBE	2						T0.8*#12
25	15532-7243-2	PACKING	1						-
26	54821-3818-2	CLIP, TUBE	1						
27	T2350-13612	TANK, WATER	1						
28	T5525-50721	CAP v	1						
29	T5855-50522001	HOSE, COOLING WATER AUTO RETURN	1						L=350
30	T5855-50521002	HOSE, OVER FLOW-1	1						L=750
31	T5855-50532	BRACKET	1 ~ VL9400144						N
31	TC26-1624A	BRACKET	1 VL9400113 ~ VL9400230					<----->	-
31	TC26-1615A	BRACKET	1 VL9400231 ~ WL9400080					<----->	-

----> Old replace New
<----> Interchangeable
* Please place an order assy(*)
<---- New replace Old
<-O-> Interchangeable with another part(s)
<-X-> Not interchangeable

https://tractormanualz.com/

TC2-G612503

RADIATOR GROUP

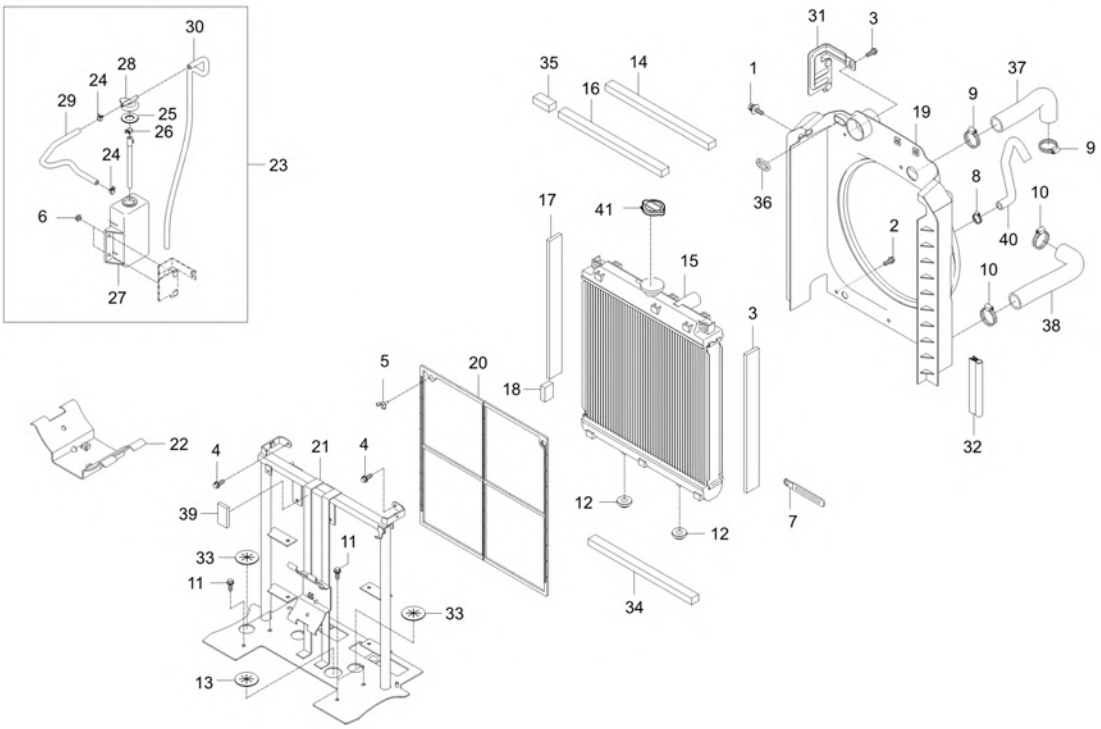

A : CK2610

No.	Part Number	Description	Qty A	Qty B	Qty C	Qty D	Qty E	I.C	Remark
32	T5855-50552	RUBBER,RADIATOR	2						-
33	T5855-50562	COVER, RUBBER	3						T3.0
34	T5855-50571	SPONGE, 5	1						고발포 PU 폼
35	T5855-50581	SPONGE, 6	1						<F6>□<F>20 X26
36	T5858-50421	COVER, RUBBER	1						N
37	T5858-50471	HOSE,UPPER	1						OD 46 / ID 34
38	T5858-50481	HOSE,LOWER	1						OD 46 / ID 34
39	TC26-0001A	SPONGE	1						저발포 PU 폼
40	TC26-0117A	HOSE, WATER RETURN	1						
41	U3215-77501	Radiator Cap	1						

----> Old replace New <---- New replace Old <-X-> Not interchangeable
<---> Interchangeable <-O-> Interchangeable with another part(s)
* Please place an order assy(*)

https://tractormanualz.com/

TC2-G648102

ACCELERATOR LEVER GROUP

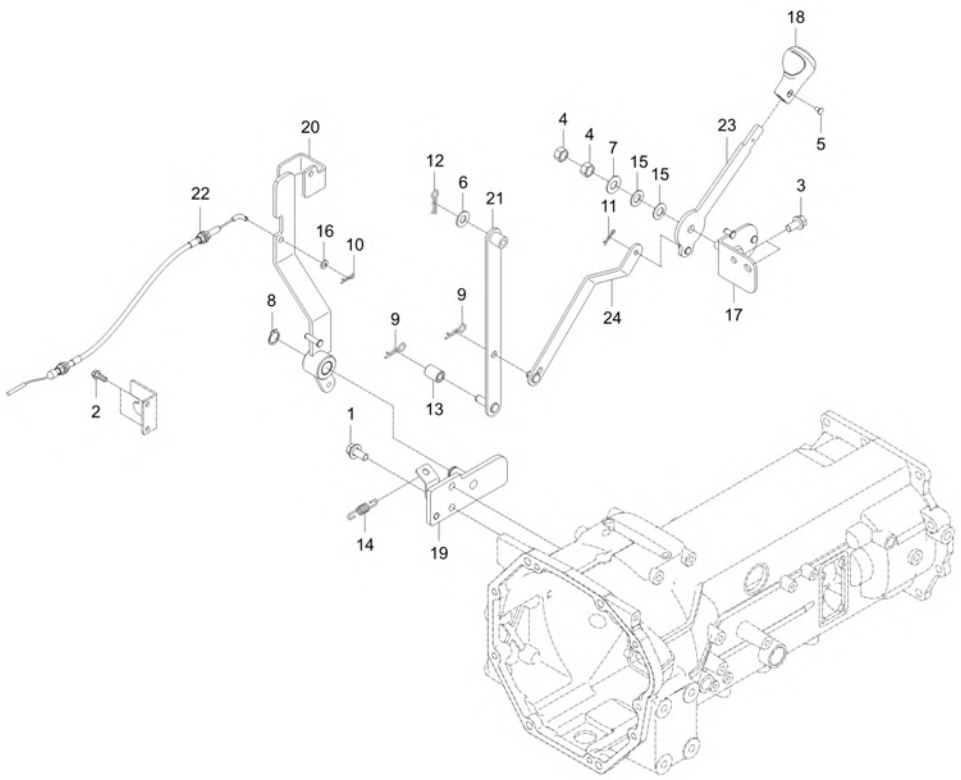

A : CK2610

No.	Part Number	Description	Qty A	Qty B	Qty C	Qty D	Qty E	I.C	Remark
1	01125-50820	BOLT, WASHER	2						M8XP1.25
2	01754-50612	BOLT, FLANGE	2						M6XP1.0
3	01754-50816	BOLT, FLANGE	2						M8XP1.25
4	02176-50100	NUT v	2						M10XP1.25
5	03056-50408	BOLT	1						M4XP0.7
6	04012-50080	WASHER, PLAIN	1						M8
7	04013-50100	PLAIN WASHER	1						M10
8	04612-00150	CIR CLIP, EXTERNAL	1						DIA15
9	05515-50800	PIN, SNAP	2						DIA8
10	05525-50600	SNAP PIN	1						DIA6
11	05525-50600	SNAP PIN	1						DIA6
12	52300-3412-1	SNAP PIN	1						DIA1.6
13	T2360-34142	USE T2360-34141	1						DIA14
14	T4157-51211	SPRING, RETURN	1						
15	T4668-83301	SPRING	2						
16	T4930-66751	WASHER 3	1						
17	T5850-55811	LEVER,ACCEL	1						-
17	T5850-55812	LEVER,ACCEL	1					<----->	-

----> Old replace New
<---> Interchangeable
* Please place an order assy(*)
<---- New replace Old
<-O-> Interchangeable with another part(s)
<-X-> Not interchangeable

https://tractormanualz.com/

TC2-G648102

ACCELERATOR LEVER GROUP

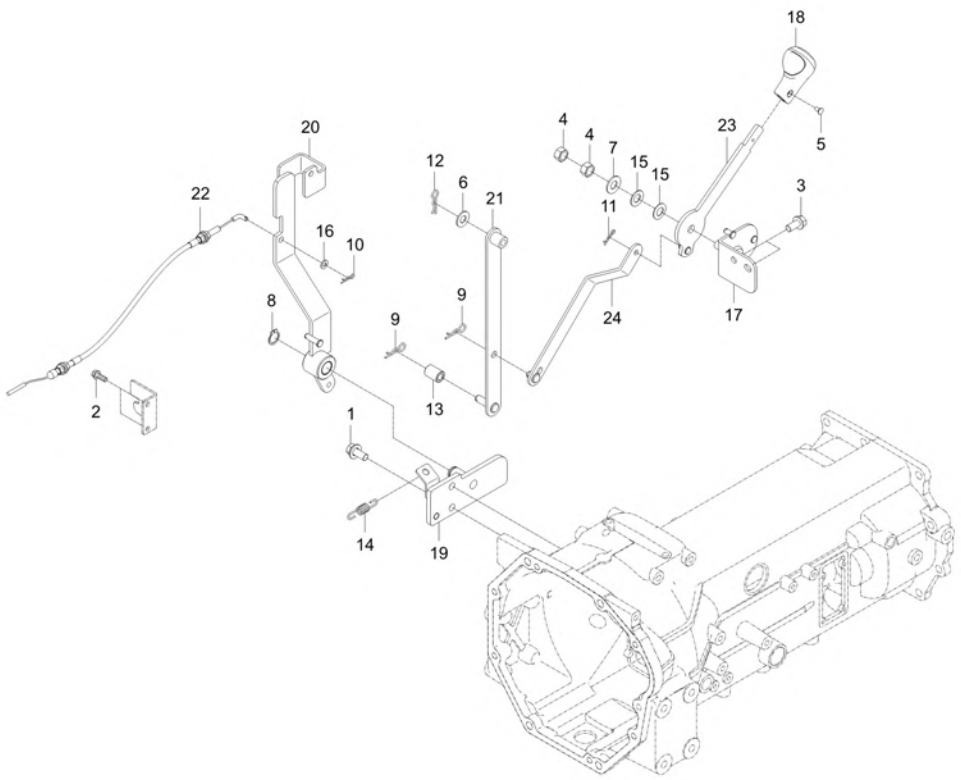

A : CK2610

No.	Part Number	Description	Qty A	Qty B	Qty C	Qty D	Qty E	I.C	Remark
18	T5750-81091	GRIP, HAND ACCEL	1						-
19	T5815-55813	BRACKET	1						-
19	T5815-55814	BRACKET	1					<----->	-
20	T5815-55824	ARM v	1						-
20	T5815-55825	ARM v	1					<----->	-
20	T5815-55826	ARM	1					<----->	-
21	T5815-55853	ROD 2	1						-
22	T5818-55832	CABLE,ACCELERATOR	1						
22	T5818-55833	CABLE,ACCELERATOR	1					<------	
22	T5818-55834	CABLE,ACCELERATOR	1					<------	
23	T5850-55812	LEVER,ACCEL	1						-
24	T5855-55863	ROD,ACCEL	1						-

----> Old replace New
<----> Interchangeable
* Please place an order assy(*)
<---- New replace Old
<-O-> Interchangeable with another part(s)
<-X-> Not interchangeable

https://tractormanualz.com/

TC2-G671003

FUEL TANK GROUP

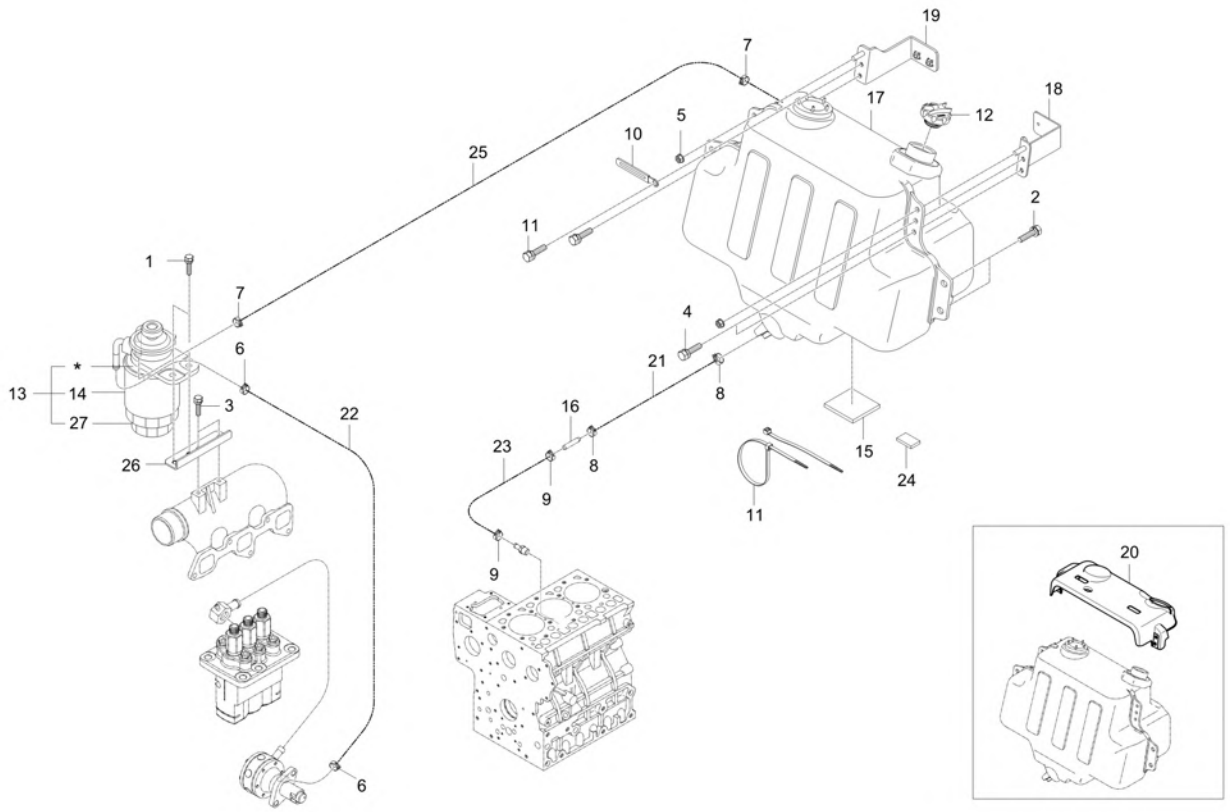

A : CK2610

No.	Part Number	Description	Qty A	Qty B	Qty C	Qty D	Qty E	I.C	Remark
1	01123-50850	Hex Head Cap Screw with Spring Washer 8mmx55mm v	2						M8XP1.25
2	01135-51025	BOLT WITH WASHER	4						M8*1.25
3	01754-50825	BOLT, FLANGE	2						M8XP1.25
4	01754-50830	BOLT FLANGE	4						M8XP1.25
5	02751-50080	FLANGE NUT 8MMX1.25P	2						M8XP1.25
6	09318-88130	CLAMP, HOSE	2						DIA13
7	09318-88130	CLAMP, HOSE	2						DIA13
8	09318-88130	CLAMP, HOSE	2						DIA13
9	14971-4275-1	CLMAP, HOSE	2						DIA1.0*ID7.8
10	37155-3447-1	CLAMP,CORD	1						-
11	T2185-82551	CABLE TIE, BLACK / 300	3						L290
12	T2611-54823	FUEL CAP ASSY dnr v	1 ~ TL9400148						
12	T2611-54824	ASSY, FUEL CAP dnr v	1					<--O-->	
12	T2611-54825	ASSY, FUEL CAP v	1 TL9400149 ~ WL9400080					<----->	
13	T4682-25732	ASSY FILTER, FUEL v	1						
14	T4682-43172	FILTER, FUEL sp v	1						
15	T4810-55312	RUBBER, CUSHION v	1						
16	T5620-51661	TUBE, CONNECTING	1						DIA10.0

----> Old replace New
<---- New replace Old
<-X-> Not interchangeable
<---> Interchangeable
<-O-> Interchangeable with another part(s)
* Please place an order assy(*)

https://tractormanualz.com/

TC2-G671003

FUEL TANK GROUP

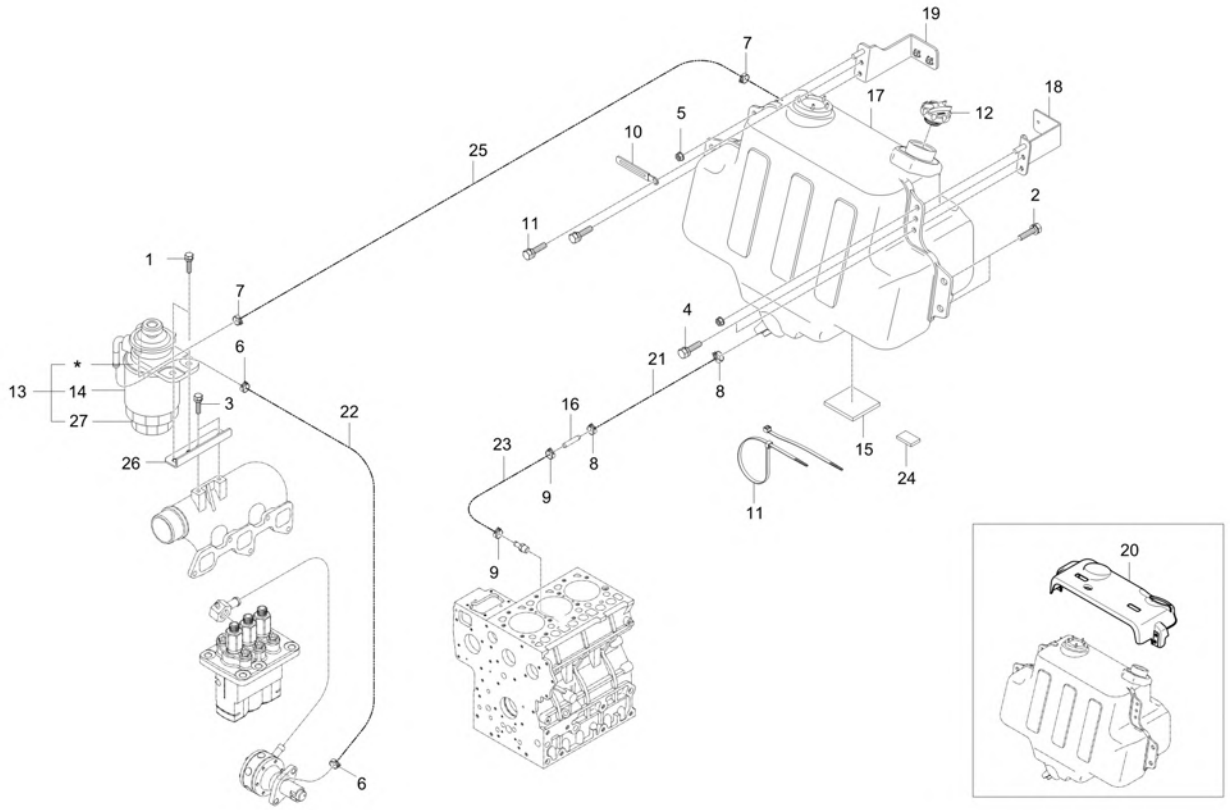

A : CK2610

No.	Part Number	Description	Qty A	Qty B	Qty C	Qty D	Qty E	I.C	Remark
17	T5855-52213	FUEL TANK	1						-
18	T5855-52223	BRKT LH,FUEL TANK	1						-
19	T5855-52233	BRACKET RH,FUEL TANK	1						-
20	T5858-52211	SHEILD,FUEL TANK	1						
21	T5858-52232	FUEL,HOSE	1 RL9400001 ~ RL9400124						OD14 / ID8
21	TC26-0085D	FUEL,HOSE v	1 RL9400003 ~ WL9400080					<------	OD13 / ID7.4
22	T5858-52242	HOSE, FUEL	1						OD14 / ID8
23	T5858-52252	FUEL,HOSE	1						OD14 / ID8
24	TC26-0001A	SPONGE	1						저발포 PU 폼
25	TC26-0085C	FUEL,HOSE dnr v	1					<----->	OD13 / ID7.4
26	TC26-0118A	SUPPORT, FUEL FILTER	1						
27	T4682-25731002	PLUG DRAIN pv	1						

----> Old replace New
<----> Interchangeable
* Please place an order assy(*)
<---- New replace Old
<-O-> Interchangeable with another part(s)
<-X-> Not interchangeable

https://tractormanualz.com/

TC2-G6D4002

LABEL(FRAME) GROUP

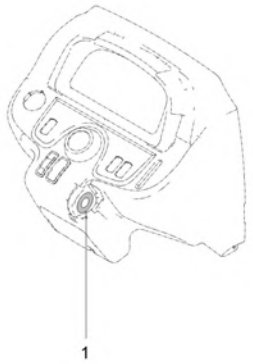

A : CK2610

No.	Part Number	Description	Qty A	Qty B	Qty C	Qty D	Qty E	I.C	Remark
1	T5248-52101	DECAL KEY SWITCH v	1 ~ UL9400112						
1	T5248-52102	LABEL, START SWITCH	1 UL9400113 ~ WL9400080					<------	

----> Old replace New
<---> Interchangeable
* Please place an order assy(*)
<---- New replace Old
<-O-> Interchangeable with another part(s)
<-X-> Not interchangeable

https://tractormanualz.com/

TB110C-T2110A

MOUNTING GROUP

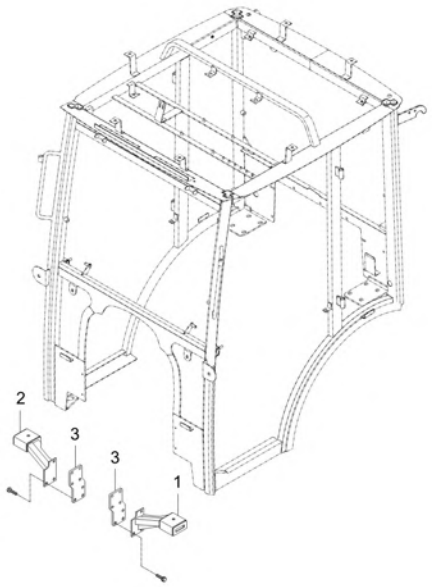

A : CK2610

No.	Part Number	Description	Qty A	Qty B	Qty C	Qty D	Qty E	I.C	Remark
1	T2395-33122	SUPPORT, CABIN ASSY LH	1						
2	T2395-33132	SUPPORT, CABIN ASSY RH	1						
3	T4665-33251	SPACER CABIN SUPPORT	2						

----> Old replace New
<---> Interchangeable
* Please place an order assy(*)
<---- New replace Old
<-O-> Interchangeable with another part(s)
<-X-> Not interchangeable

https://tractormanualz.com/

TB110C-T2120A

FRONT GLASS GROUP

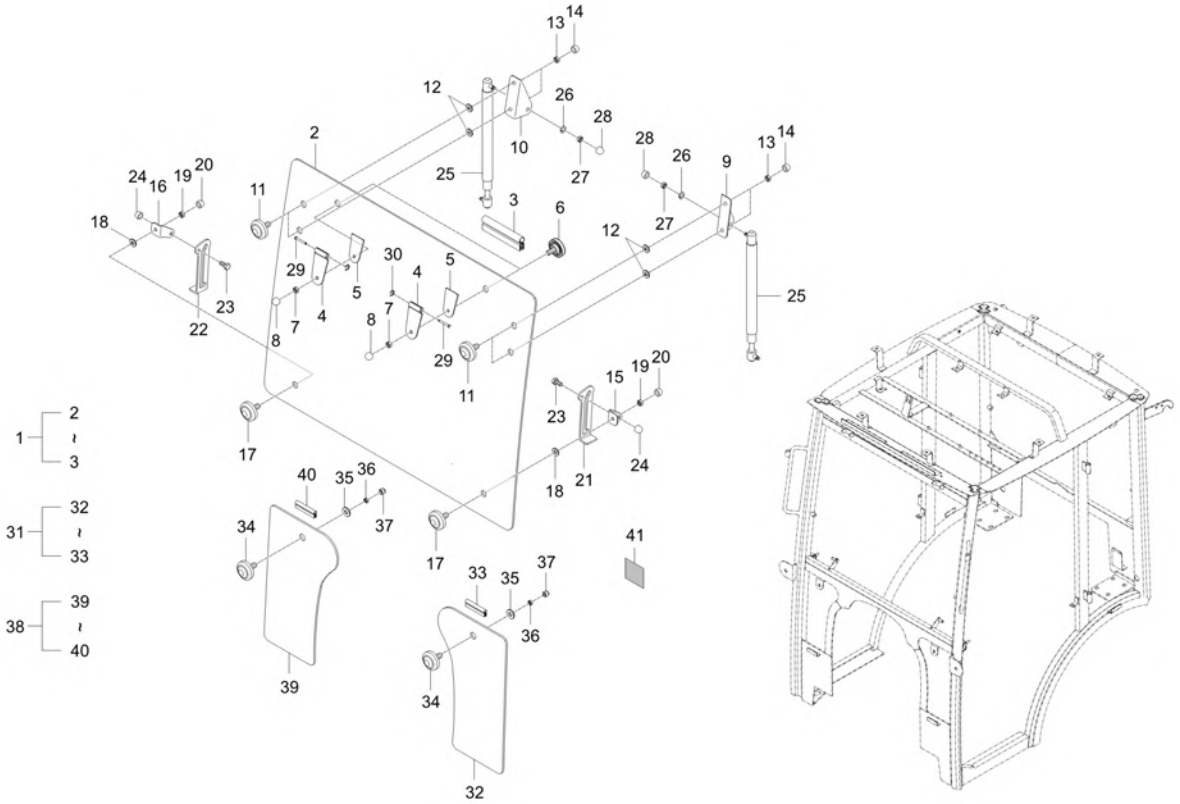

A : CK2610

No.	Part Number	Description	Qty A	Qty B	Qty C	Qty D	Qty E	I.C	Remark
1	T2391-82101	GALSS ASSY, FR UP	1						
2	T2391-82111	TRK - GLASS FR UP v	1						
3	T2391-82121	RUBBER FRONT GLASS UP v	1						
4	T4624-84511	HINGE, REAR (A)	2						T3.0
5	T4681-90911	PACKING	2						
6	T4620-81842	BOLT, CUSHION v	2						
7	02114-50080	NUT v	2						M8*P1.25
8	T4815-93211	NUT CAP	2						M8
9	T4681-85321	BRACKET, DOOR RR LH	1						
10	T4681-85331	BRACKET, DOOR RR RH	1						
11	T4620-81842	BOLT, CUSHION v	4						
12	T4520-88401	PACKING	4						
13	02114-50080	NUT v	4						M8*P1.25
14	T4815-93211	NUT CAP	4						M8
15	T2131-82141	BRACKET HOLDING FRONT GLASS LH	1						
16	T2131-82151	BRACKET HOLDING FRONT GLASS RH	1						
17	T4620-81842	BOLT, CUSHION v	2						
18	T4520-88401	PACKING	2						

----> Old replace New
<----> Interchangeable
* Please place an order assy(*)
<---- New replace Old
<-O-> Interchangeable with another part(s)
<-X-> Not interchangeable

https://tractormanualz.com/

TB110C-T2120A

FRONT GLASS GROUP

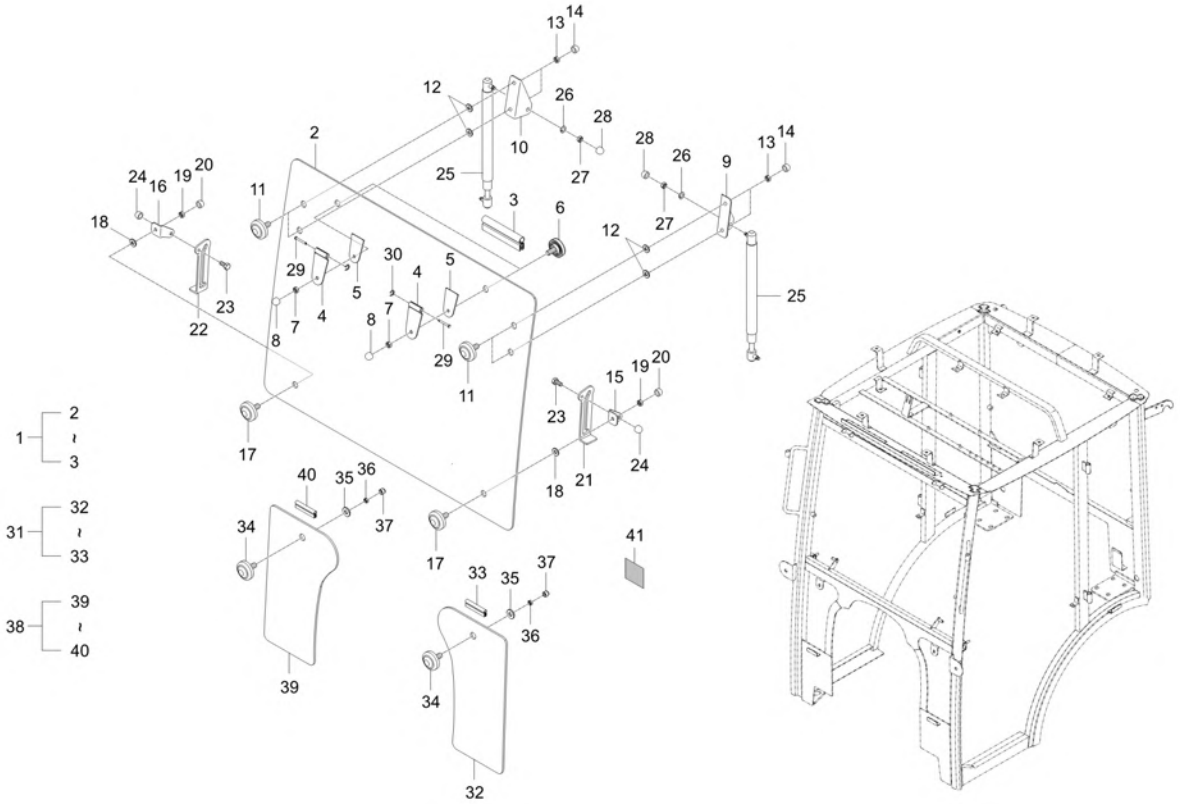

A : CK2610

No.	Part Number	Description	Qty A	Qty B	Qty C	Qty D	Qty E	I.C	Remark
19	02114-50080	NUT v	2						M8*P1.25
20	T4815-93211	NUT CAP	2						M8
21	T2131-82161	GRIP LH v	1						
22	T2131-82171	GRIP RH	1						-
23	01150-50820	BOLT	2						
24	T4815-93211	NUT CAP	4						M8
25	T4835-87621	AIR CYLINDER v	2						
26	04512-50080	SPRING WASHER	4						M08
27	02114-50080	NUT v	2						M8*P1.25
28	T4815-93211	NUT CAP	2						M8
29	T4620-88051	PIN, HINGE	2						-
30	04613-50060	RING SNAP	2						DIA06
31	T4665-83101	GLASS ASSY, FR LWR LH	1						
32	T4665-83111	GLASS, FR LOW LH CK2510 v	1						
33	T4655-83121	RUBBER, FR LWR v	1						
34	T4620-81842	BOLT, CUSHION v	2						
35	T4520-88401	PACKING	2						
36	02114-50080	NUT v	2						M8*P1.25

----> Old replace New
<----> Interchangeable
* Please place an order assy(*)
<---- New replace Old
<-O-> Interchangeable with another part(s)
<-X-> Not interchangeable

https://tractormanualz.com/

TB110C-T2120A

FRONT GLASS GROUP

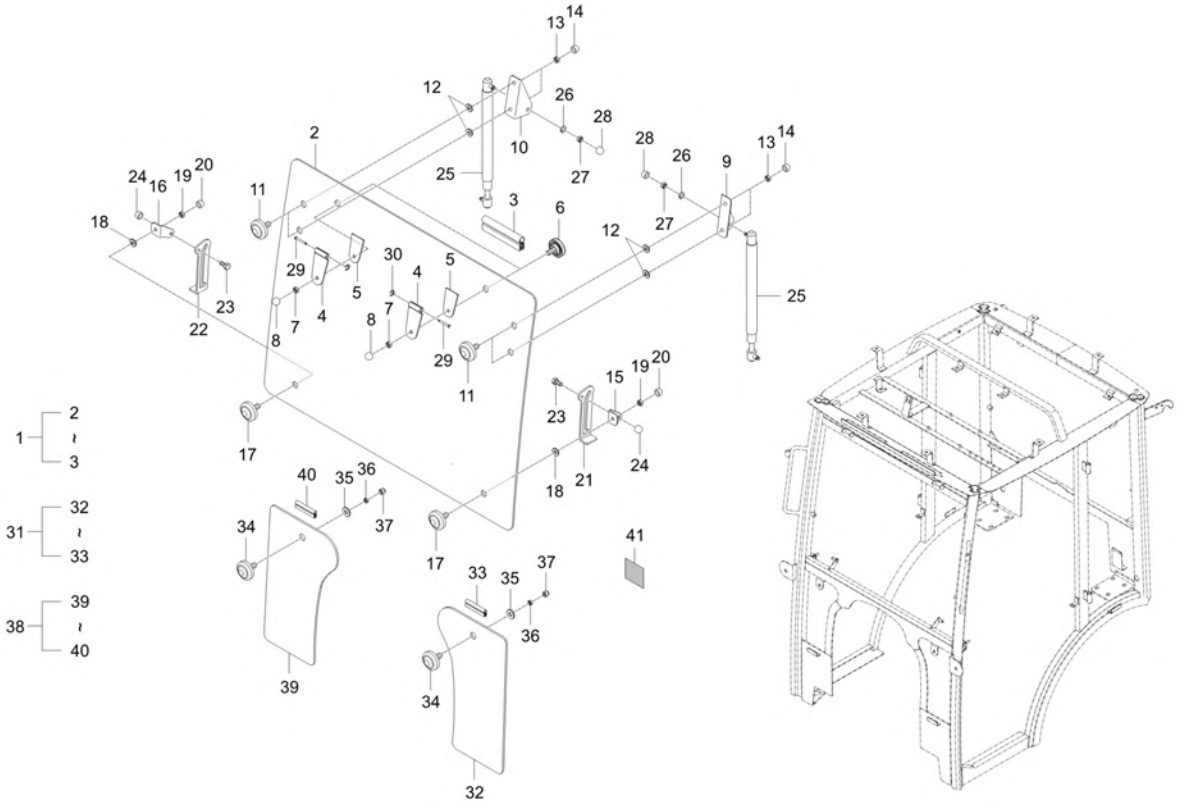

A : CK2610

No.	Part Number	Description	Qty A	Qty B	Qty C	Qty D	Qty E	I.C	Remark
37	T4815-93211	NUT CAP	2						M8
38	T4665-83201	GLASS ASSY, FR LWR RH	1						
39	T4665-83211	GLASS, FR LOW RH CK2510 v	1						
40	T4665-83221	RUBBER, FR LWR RH CK2510	1						
41	T2131-82191	LABEL, CAUTION	1						

----> Old replace New
<----> Interchangeable
* Please place an order assy(*)
<---- New replace Old
<-O-> Interchangeable with another part(s)
<-X-> Not interchangeable

https://tractormanualz.com/

CK20C-T2130A

DOOR GROUP

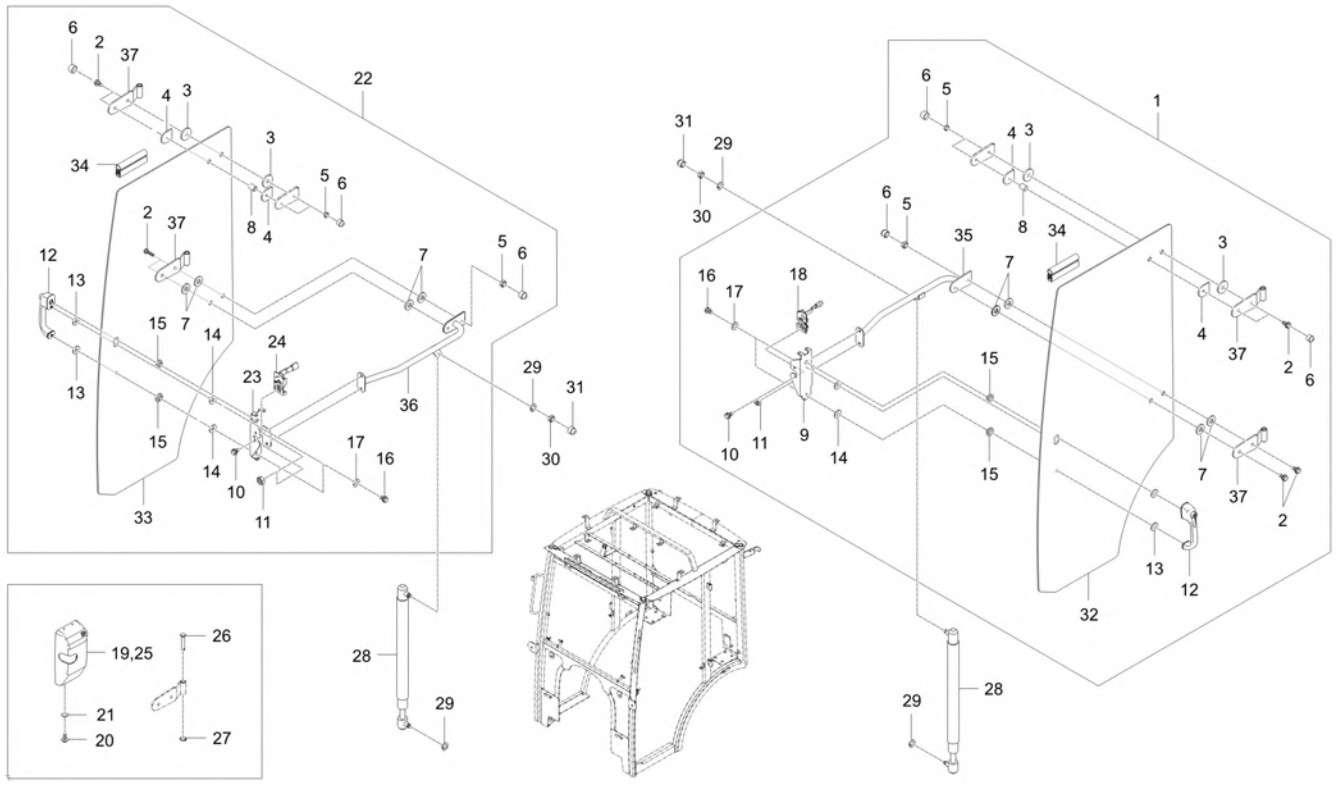

A : CK2610

No.	Part Number	Description	Qty A	Qty B	Qty C	Qty D	Qty E	I.C	Remark
1	T2391-84102	DOOR ASSY, LH v	1						
2	01754-50835	BOLT v	8						M8XP1.25
3	T4520-87402	PACKING, 1	4						T3
4	T4681-90911	PACKING	4						
5	02114-50080	NUT v	8						M8*P1.25
6	T4815-93211	NUT CAP	16						M8
7	T4520-87402	PACKING, 1	8						T3
8	T4681-83431	COLLAR	8						
9	T2131-83761	BRACKET HANDLE LH	1						
10	01754-50620	BOLT, FLANGE	4						M6XP1.0
11	02751-50060	NUT, FLANGE	4						M6XP1.0
12	T2131-51031	HANDLE DOOR	2						
13	T4520-88401	PACKING	2						
14	T4520-88401	PACKING	2						
15	T2131-84271	RUBBER A GLASS	2						
16	01023-50625	BOLT WASHER v	4						M6XP1.0
17	04013-50060	PLAIN WASHER	4						M6
18	T4930-51351	ASSY LATCH LH	1						

----> Old replace New
<----> Interchangeable
* Please place an order assy(*)
<---- New replace Old
<-O-> Interchangeable with another part(s)
<-X-> Not interchangeable

https://tractormanualz.com/

CK20C-T2130A

DOOR GROUP

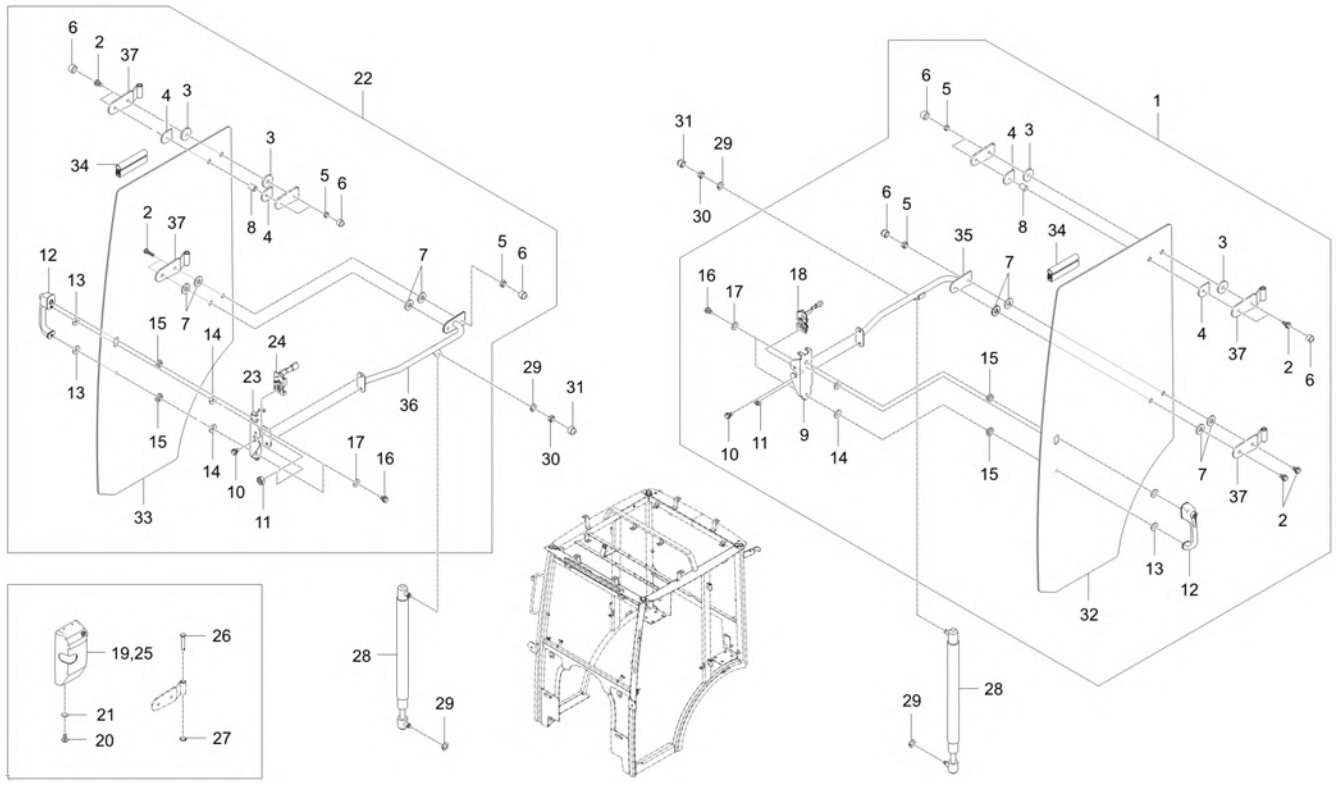

A : CK2610

No.	Part Number	Description	Qty A	Qty B	Qty C	Qty D	Qty E	I.C	Remark
19	T4930-81321	COVER SIDE DOOR LH	1						T3.0
20	03054-50416	SCREW	2						M4*0.7
21	04013-50040	WASHER PLAIN	2						M4
22	T2391-85102	DOOR ASSY, RH v	1						
23	T2131-83771	BRACKET HANDLE RH	1						
24	T4930-51361	ASSY LATCH RH	1						
25	T4930-81331	COVER SIDE DOOR RH	1						T3.0
26	T4810-82741	PIN HINGE ENTRANCE	4						
27	04613-50100	RING SNAP	4						
28	T2191-84731	CYLINDER AIR	2						
29	04512-50080	SPRING WASHER	4						M08
30	02114-50080	NUT v	2						M8*P1.25
31	T4815-93211	NUT CAP	2						M8
32	T2391-84121	TRK - GLASS DOOR LH v	1						
33	T2391-85121	TRK - GLASS DOOR RH v	1						
34	T2391-84131	RUBBER dnr v	1						
35	T2391-84211	ASSY FRAME DOOR LH	1						
36	T2391-85211	ASSY FRAME DOOR RH	1						

----> Old replace New <---- New replace Old <-X-> Not interchangeable
<---> Interchangeable <-O-> Interchangeable with another part(s)
* Please place an order assy(*)

https://tractormanualz.com/

CK20C-T2130A

DOOR GROUP

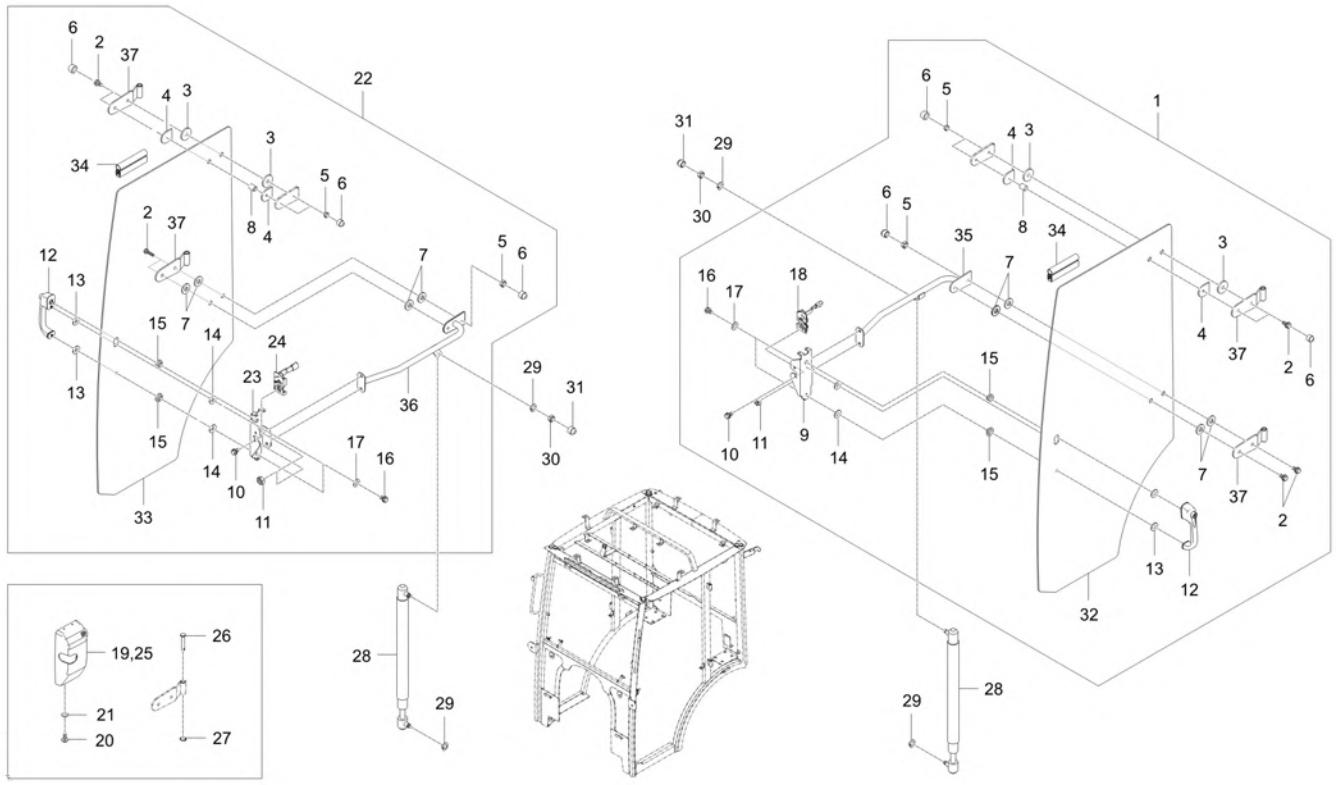

A : CK2610

No.	Part Number	Description	Qty A	Qty B	Qty C	Qty D	Qty E	I.C	Remark
37	T2131-84251	HINGE DOOR	2						

----> Old replace New
<---- New replace Old
<-X-> Not interchangeable
<---> Interchangeable
<-O-> Interchangeable with another part(s)
* Please place an order assy(*)

https://tractormanualz.com/

TB110C-T2140A

REAR GLASS GROUP

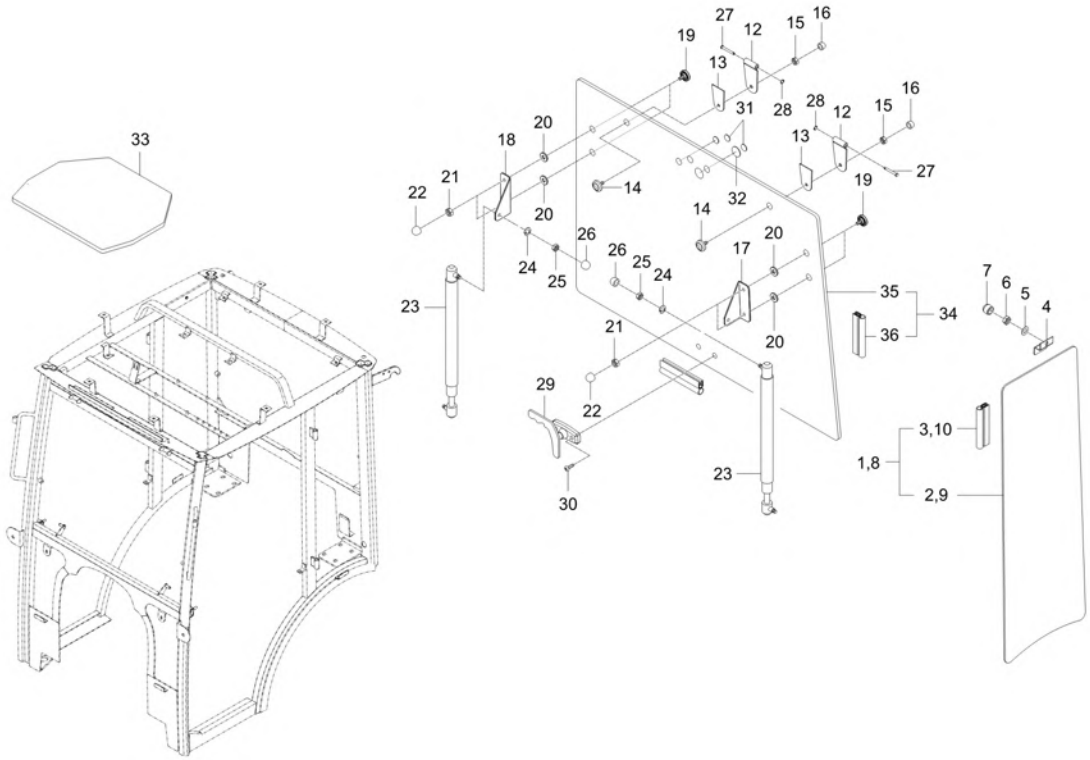

A : CK2610

No.	Part Number	Description	Qty A	Qty B	Qty C	Qty D	Qty E	I.C	Remark
1	T2391-86101	GLASS ASSY, OUTSIDE LH	1						
2	T2391-86111	GLASS OUTSIDE LH v	1						
3	T2391-86121	RUBBER GLASS v	1						
4	T4681-85011	BRACKET WINDOW A v	2						
5	04013-50060	PLAIN WASHER	2						M6
6	02114-50060	NUT dnr v	2						
7	T4680-93211	NUT CAP M6	2						
8	T2391-87101	GLASS ASSY, OUTSIDE RH	1						
9	T2391-87111	GLASS OUTSIDE RH v	1						
10	T2391-87121	RUBBER GLASS	1						
12	T4624-84511	HINGE, REAR (A)	2						T3.0
13	T4681-90911	PACKING	2						
14	T4620-81842	BOLT, CUSHION v	2						
15	02114-50080	NUT v	2						M8*P1.25
16	T4815-93211	NUT CAP	2						M8
17	T4681-85321	BRACKET, DOOR RR LH	1						
18	T4681-85331	BRACKET, DOOR RR RH	1						
19	T4620-81842	BOLT, CUSHION v	4						

----> Old replace New <---- New replace Old <-X-> Not interchangeable
<---> Interchangeable <-O-> Interchangeable with another part(s)
* Please place an order assy(*)

https://tractormanualz.com/

TB110C-T2140A

REAR GLASS GROUP

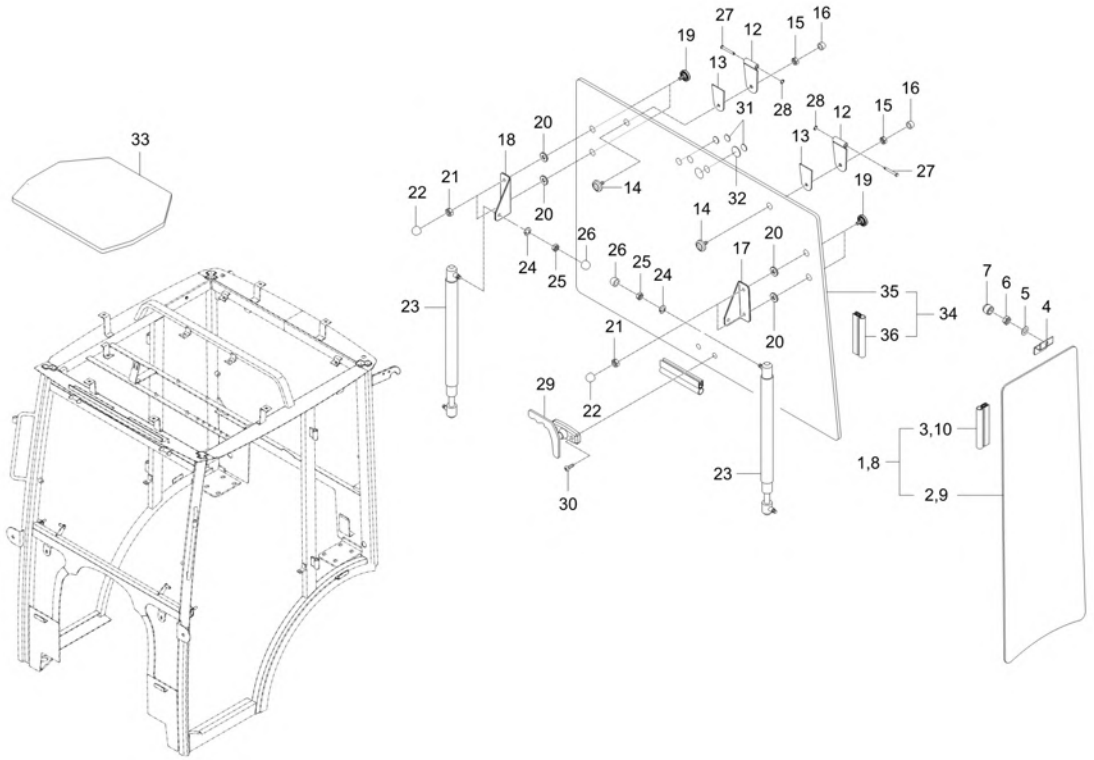

A : CK2610

No.	Part Number	Description	Qty A	Qty B	Qty C	Qty D	Qty E	I.C	Remark
20	T4520-88401	PACKING	4						
21	02114-50080	NUT v	4						M8*P1.25
22	T4815-93211	NUT CAP	4						M8
23	T4835-87621	AIR CYLINDER v	2						
24	04512-50080	SPRING WASHER	4						M08
25	02114-50080	NUT v	2						M8*P1.25
26	T4815-93211	NUT CAP	2						M8
27	05112-50855	PIN	2						
28	04613-50060	RING SNAP	2						DIA06
29	C7280-89541	ASSY GRIP v	1						
30	03054-50614	BOLT SCREW dnr v	2						
31	T4935-78122	GROMMET	3						
32	T4935-78112	GROMMET	1						
33	T4665-85561	ROOF, SPONGE	1						
34	T4665-88101	GLASS ASSY, RR	1						
35	T4665-88111	GLASS RR v	1						
36	T4665-88121	RUBBER , GLASS v	1						

----> Old replace New <---- New replace Old <-X-> Not interchangeable
<---> Interchangeable <-O-> Interchangeable with another part(s)
* Please place an order assy(*)

https://tractormanualz.com/

CK30C-T2170A

WIPER MOTOR GROUP

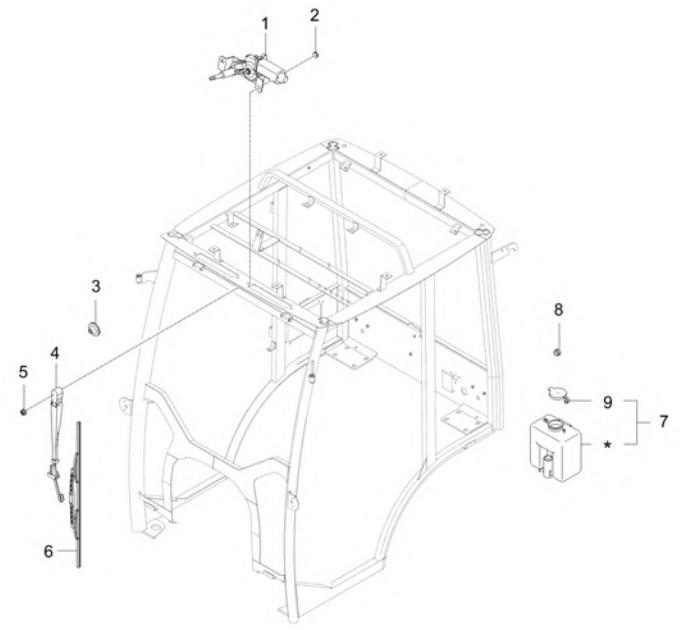

A : CK2610

No.	Part Number	Description	Qty A	Qty B	Qty C	Qty D	Qty E	I.C	Remark
1	T4930-69911	MOTOR WIPER FR v	1						
2	02751-50080	FLANGE NUT 8MMX1.25P	2						M8XP1.25
3	T4815-89171	GROMMET v	1						N
4	T4681-83711	ARM WIPER	1						
5	02751-50080	FLANGE NUT 8MMX1.25P	1						M8XP1.25
6	T2131-88231	BRUSH 12'	1						
7	T4340-87181	ASSY TANK WASHER LIQUID	1						N
8	T4624-84411	GROMMET obs v	1						
9	T4815-87181002	CAP v	1						

----> Old replace New
<---- New replace Old
<-X-> Not interchangeable
<---> Interchangeable
<-O-> Interchangeable with another part(s)
* Please place an order assy(*)

https://tractormanualz.com/

TB1-G6C2502

ROOF GROUP

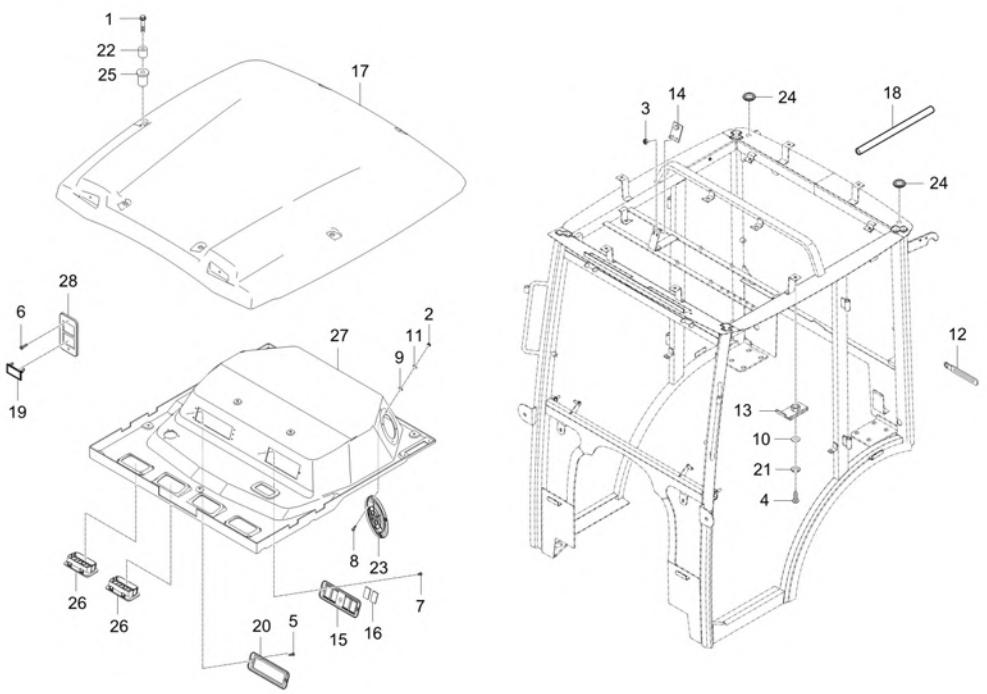

A : CK2610

No.	Part Number	Description	Qty A	Qty B	Qty C	Qty D	Qty E	I.C	Remark
1	01754-50830	BOLT FLANGE	1						M8XP1.25
2	02054-50040	NUT	1						M4XP0.7
3	02751-50060	NUT, FLANGE	1						M6XP1.0
4	03014-50630	SCREW v	1						M6*P1.0
5	03054-50416	SCREW	1						M4*0.7
6	03054-50416	SCREW	2						M4*0.7
7	03054-50416	SCREW	1						M4*0.7
8	03054-50420	OB SCREW	1						
9	04013-50040	WASHER PLAIN	1						M4
10	04013-50060	PLAIN WASHER	1						M6
11	04512-50040	WASHER, SPRING	1						M04
12	37150-3447-1	WIR'G CLAMP	1						T0.5
13	38245-2925-3	NUT, SPRING	1						
14	T2131-82411	BRACKET 1, CASSETTE	1						
15	T2131-82511	PANNEL SWITCH	1						
16	T2131-82521	COVER	1						
17	T2391-82001	TRK - ROOF	1						
18	T2391-89131	HOSE WIPER -KTT	1						

----> Old replace New <---- New replace Old <-X-> Not interchangeable
<---> Interchangeable <-O-> Interchangeable with another part(s)
* Please place an order assy(*)

https://tractormanualz.com/

TB1-G6C2502

ROOF GROUP

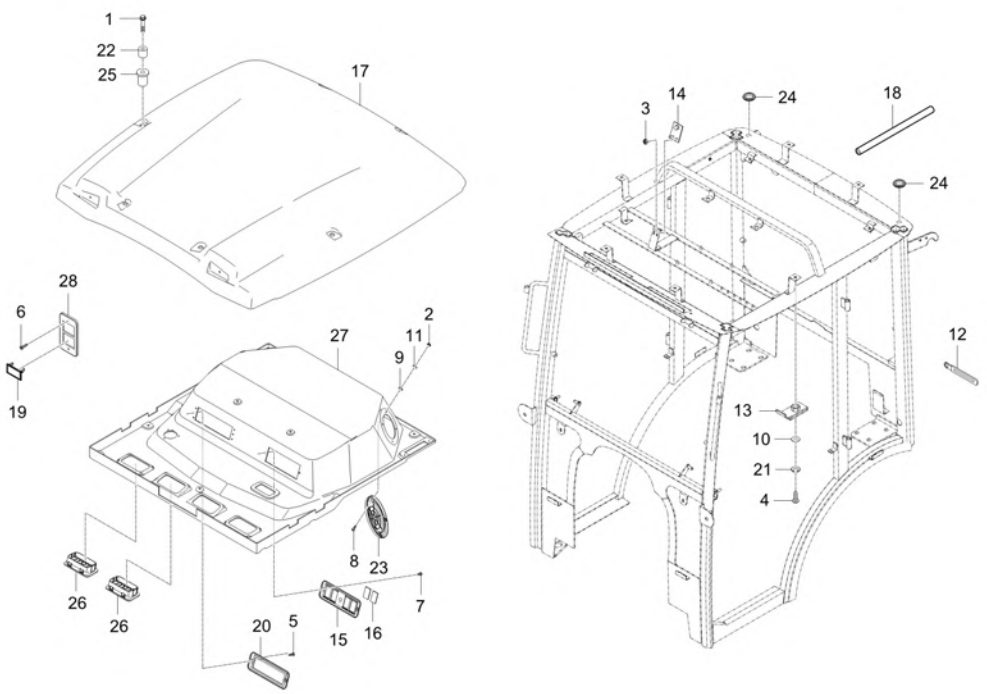

A : CK2610

No.	Part Number	Description	Qty A	Qty B	Qty C	Qty D	Qty E	I.C	Remark
19	T4025-68301	COVER	1						
20	T4145-82072	COVER STEREO	1						
21	T4145-82081	CAP RUBBER	1						
22	T4681-83431	COLLAR	1						
23	T4810-82352	GRILL SPEAKER	1						
24	T4815-78112	GROMMET v	1						
25	T4833-87141	WASHER PACKING v	1						
26	T4930-83082	GRILL AIR CONDITIONER	1						
27	TB16-0012A	ASSY CEILING	1						
27	TB16-0012B	ASSY CEILING	1					<----->	
27	TB16-0012C		1					<------	
28	TC26-0383A	SWITCH - PANEL 2	1						

----> Old replace New
<---- New replace Old
<-X-> Not interchangeable
<---> Interchangeable
<-O-> Interchangeable with another part(s)
* Please place an order assy(*)

https://tractormanualz.com/

TC2-G6C2503

ROOF GROUP

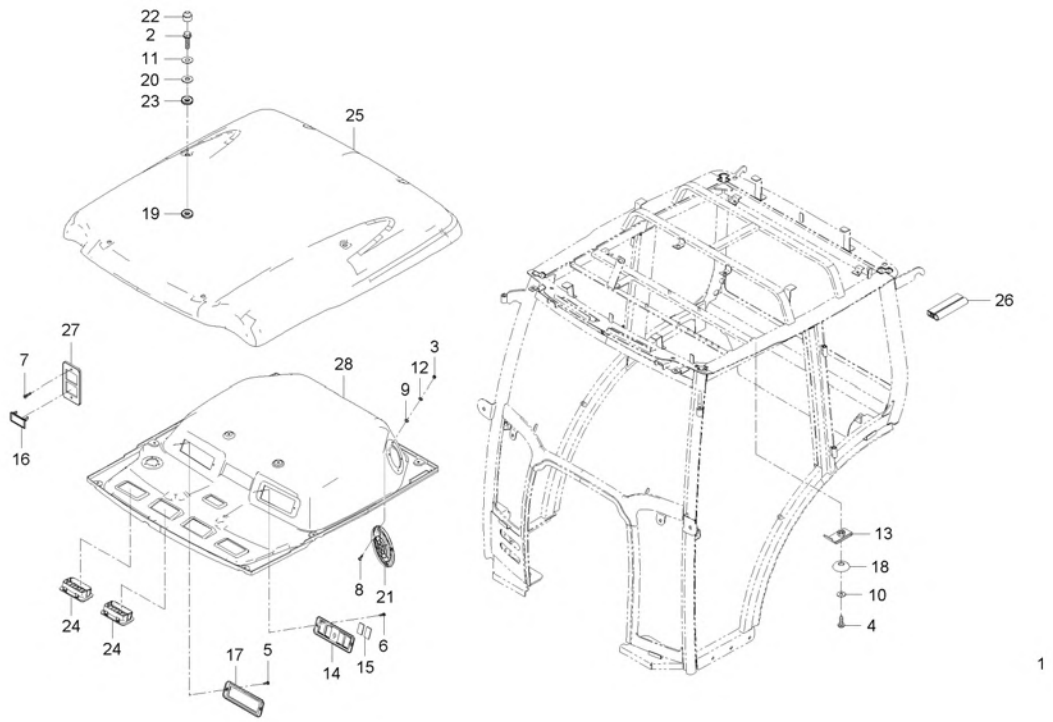

A : CK2610

No.	Part Number	Description	Qty A	Qty B	Qty C	Qty D	Qty E	I.C	Remark
1	01754-50816	BOLT, FLANGE	4						M8XP1.25
2	01754-50830	BOLT FLANGE	6						M8XP1.25
3	02114-50080	NUT v	8						M8*P1.25
4	03014-50630	SCREW v	9						M6*P1.0
5	03054-50414	SCREW	8						
6	03054-50416	SCREW	2						M4*0.7
7	03054-50416	SCREW	2						M4*0.7
8	03054-50416	SCREW	2						M4*0.7
9	04013-50040	WASHER PLAIN	8						M4
10	04013-50060	PLAIN WASHER	9						M6
11	04013-50080	PLAIN WASHER	6						
12	04512-50040	WASHER, SPRING	8						M04
13	38245-2925-3	NUT, SPRING	9						
14	T2131-82511	PANNEL SWITCH	1						
15	T2131-82521	COVER	2						
16	T4025-68301	COVER	2						
17	T4145-82072	COVER STEREO	1						
18	T4145-82081	CAP RUBBER	9						

----> Old replace New <---- New replace Old <-X-> Not interchangeable
<---> Interchangeable <-O-> Interchangeable with another part(s)
* Please place an order assy(*)

https://tractormanualz.com/

TC2-G6C2503

ROOF GROUP

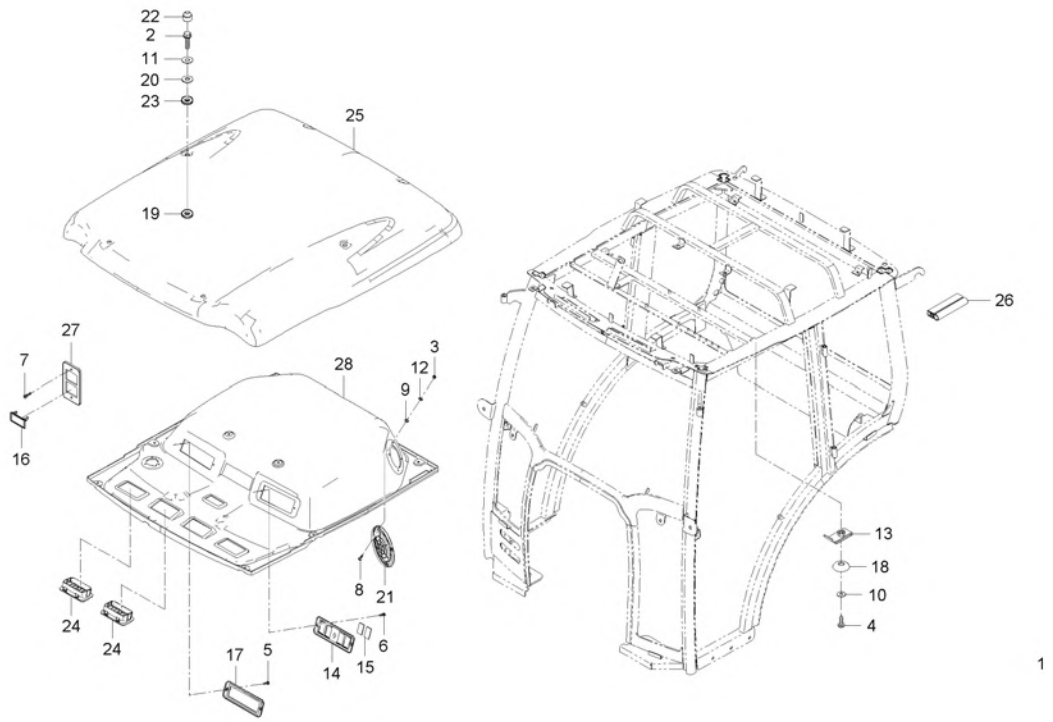

A : CK2610

No.	Part Number	Description	Qty A	Qty B	Qty C	Qty D	Qty E	I.C	Remark
19	T4520-88401	PACKING	6						
20	T4681-83431	COLLAR	6						
21	T4810-82352	GRILL SPEAKER	2						
22	T4815-93211	NUT CAP	6						M8
23	T4833-87141	WASHER PACKING v	6						
24	T4930-83082	GRILL AIR CONDITIONER	4						
25	TC26-0154A	TRK - ROOF v	1						
26	TC26-0155A	RUBBER, ROOF SEALING	1						
27	TC26-0383A	SWITCH - PANEL 2	1						
28	TC26-0384A	ASSY CEILING	1						

----> Old replace New
<---- New replace Old
<-X-> Not interchangeable
<---> Interchangeable
<-O-> Interchangeable with another part(s)
* Please place an order assy(*)

https://tractormanualz.com/

TB1-G216002

ELECTRICAL PARTS GROUP

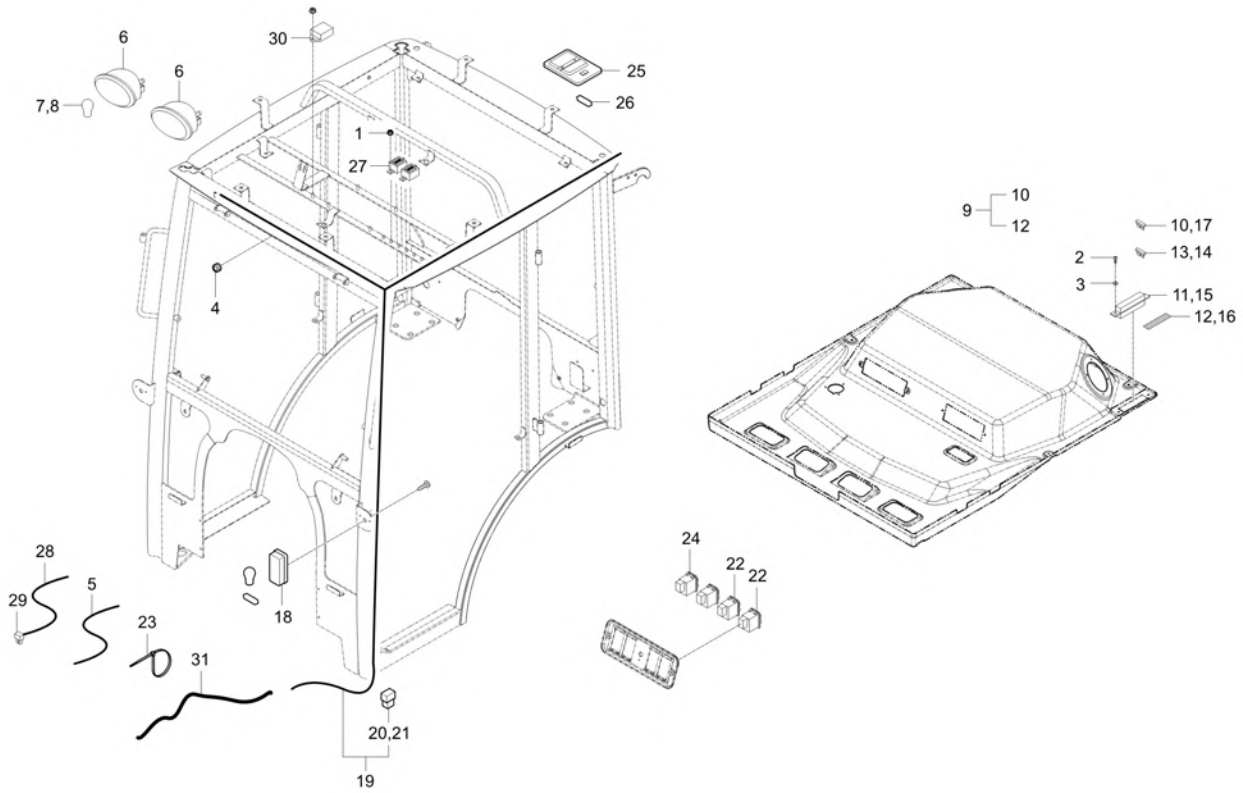

A : CK2610

No.	Part Number	Description	Qty A	Qty B	Qty C	Qty D	Qty E	I.C	Remark
1	02751-50060	NUT, FLANGE	7						M6XP1.0
2	03056-50416	BOLT	2						M4XP0.7
3	04013-50100	PLAIN WASHER	2						M10
4	31355-2949-1	GROMMET	2						
5	T2131-69351	HARNESS WIRE GENERATOR CONNECTION	1						
6	T2131-69803	ASSY LAMJP,WORKING v	2						AF/O TCJ1022800
7	T4620-69251	BULB, HALOGEN 12VX35W	1						H3
8	T4620-69251	BULB, HALOGEN 12VX35W	1						H3
9	T2135-69601	BOX FUSE -KTT	1						
10	35820-7556-1	FUSE, 15A	2						
11	P5370-69321	COVER, FUSE BOX	1						
12	T2135-68221	COVER, FUSE-BOX	1						
13	T4260-33631	FUSE, 10A	2						
14	35820-7556-1	FUSE, 15A	2						
15	P5370-69321	COVER, FUSE BOX	1						
16	T2135-68221	COVER, FUSE-BOX	1						
17	T4260-33631	FUSE, 10A	2						
18	T2391-69071	LAMP FRONT COMBINATION v	2						

----> Old replace New <---- New replace Old <-X-> Not interchangeable
<---> Interchangeable <-O-> Interchangeable with another part(s)
* Please place an order assy(*)

https://tractormanualz.com/

TB1-G216002

ELECTRICAL PARTS GROUP

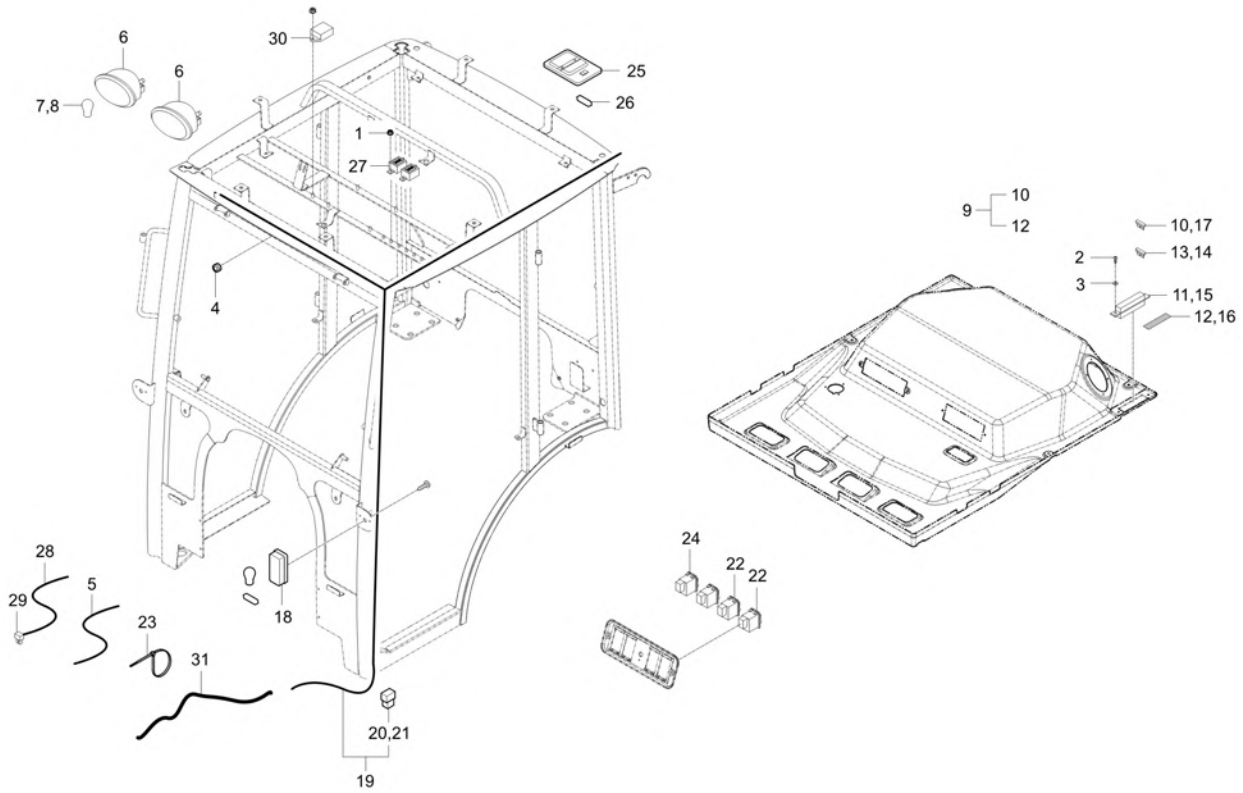

A : CK2610

No.	Part Number	Description	Qty A	Qty B	Qty C	Qty D	Qty E	I.C	Remark
19	TB25-0003A	ASSY WIRE HARNESS, CABIN	1						
19	TB25-0003B	ASSY WIRE HARNESS, CABIN	1					<------	
20	52794-4242-1	FUSE, 60A	1						
21	52794-4242-1	FUSE, 60A	1						
22	T4520-54222	SWITCH WORKING LAMP	2						
23	T4520-82551	BAND, CORD v	2						L270
24	T4681-83611	SWITCH HEATER	1						
25	T4815-82361	LAMP ROOM	1						
26	T4815-46791	BULB (DK45S / DK55 / DK65S-ROOM LAMP ASS'Y)	1						
27	T5535-69961	RELAY,5P	6						Bracket
28	TB15-0001A	ASSY WIRE HARNESS TB110 CABIN REAR LIGHT WIRE v	2						
29	52794-4242-1	FUSE, 60A	1						
30	T4836-69251	TIMER	1						
30	T4836-69252	TIMER, HEAT WIRE	1					<------	
31	TD25-0015A	ASSY WIRE HARNESS, CONNECTING GLASS HEAT	2						
32	TB15-0024A	TURN SIGNAL LAMP	2						
33	T5638-85721	ASS'Y REFLECTOR dnr v	2						
34	02054-50040	NUT	2						M4XP0.7

----> Old replace New
<---- New replace Old
<-X-> Not interchangeable
<---> Interchangeable
<-O-> Interchangeable with another part(s)
* Please place an order assy(*)

https://tractormanualz.com/

TC2-G223002

WIPER(REAR) GROUP(OPTION)

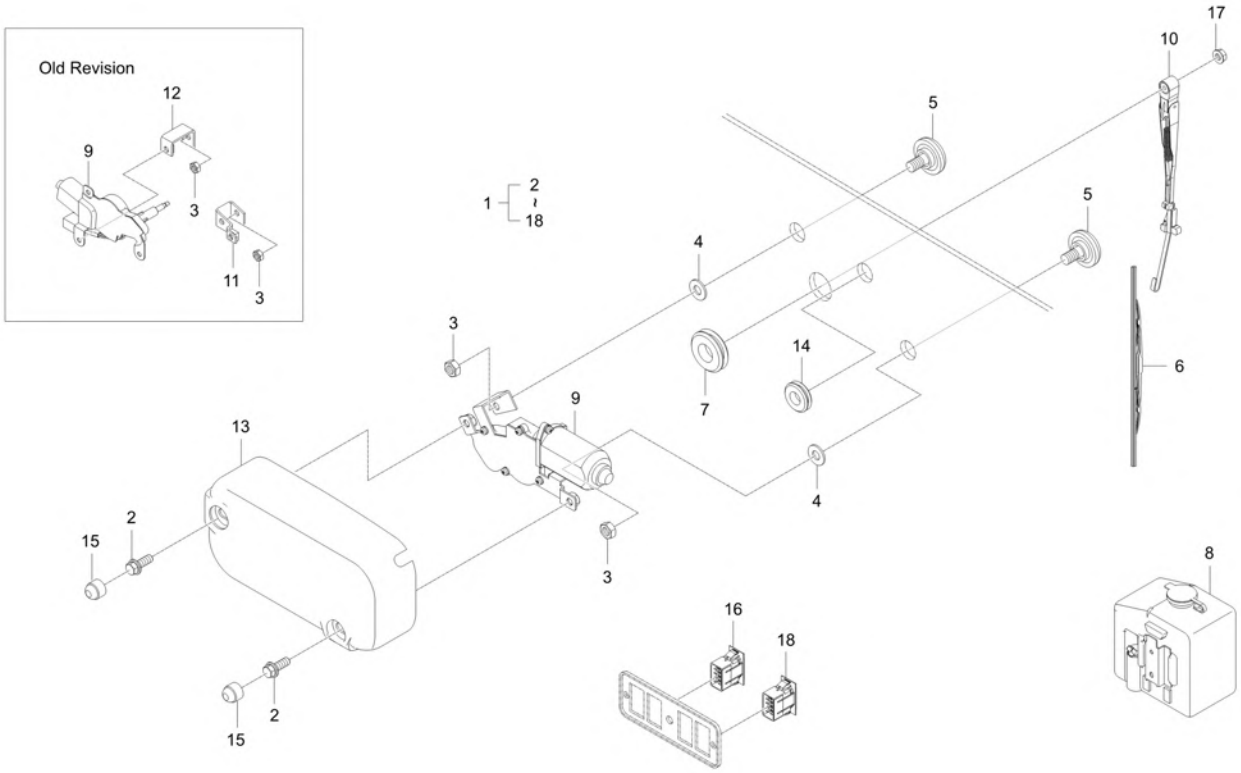

A : CK2610

No.	Part Number	Description	Qty A	Qty B	Qty C	Qty D	Qty E	I.C	Remark
1	T2131-88503	ASSY, REAR WIPER KIT	1						
1	T2131-88504	ASSY, REAR WIPER KIT	1					<------	
1	T2131-88505	ASSY, REAR WIPER KIT	1					<------	
2	01123-50820	BOLT, WASHER v	3						M8XP1.25
3	02114-50080	NUT v	2						M8*P1.25
4	T4520-88401	PACKING	2						
5	T4620-81842	BOLT, CUSHION v	2						
6	T4686-82431	WIPER 13 IN	1						
7	T4815-78112	GROMMET v	1						
8	T4815-87181	WASHER TANK, REAR WIPER	1						
9	T4815-88211	WIPER MOTOR ASS`Y v	1						
9	TG15-0243A	ASSY MOTOR, WIPER	1					<------	
10	T4815-88221	ARM, WIPER	1						
11	T4815-89141	BRACKET A V dnr v	1						N
12	T4815-89151	BRACKET B	1						N
13	T4815-89162	COVER v	1						N
13	T4815-89163	COVER	1					<----->	T2.0
14	T4815-89171	GROMMET v	1						N

----> Old replace New
<---- New replace Old
<-X-> Not interchangeable
<---> Interchangeable
<-O-> Interchangeable with another part(s)
* Please place an order assy(*)

https://tractormanualz.com/

TC2-G223002

WIPER(REAR) GROUP(OPTION)

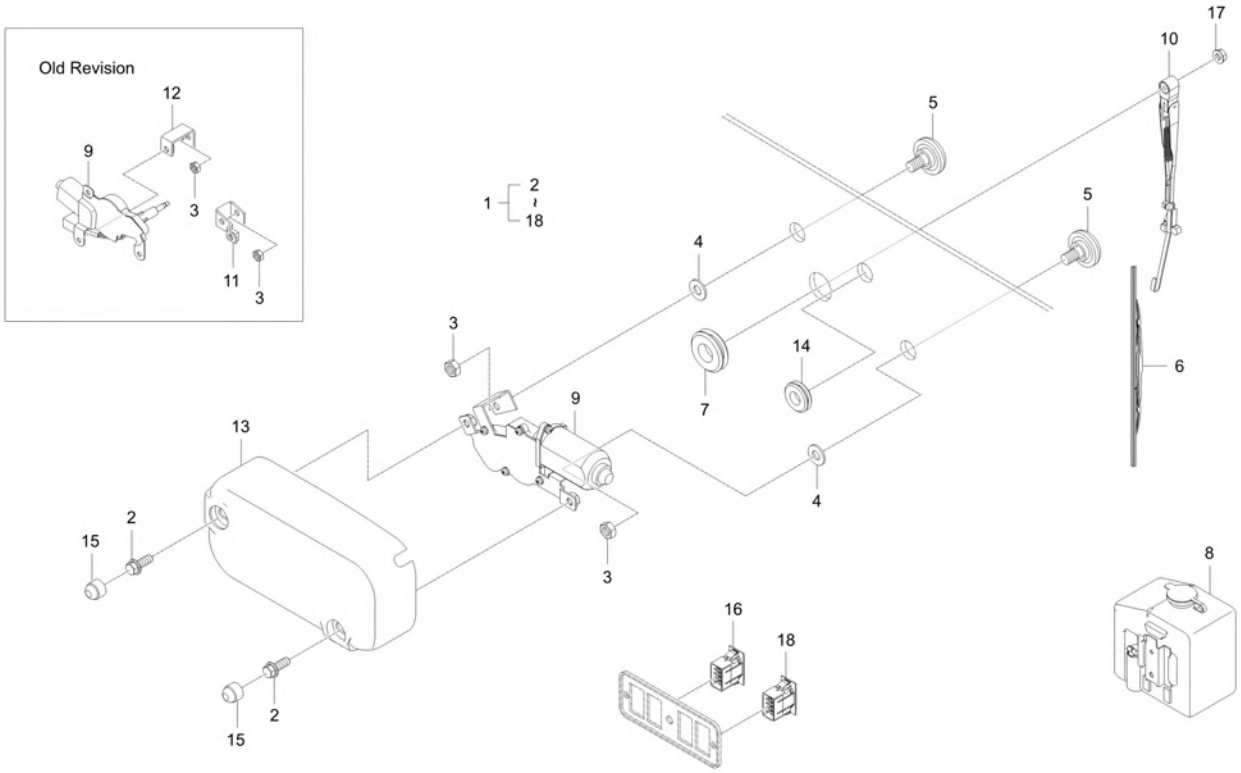

A : CK2610

No.	Part Number	Description	Qty A	Qty B	Qty C	Qty D	Qty E	I.C	Remark
15	T4815-93211	NUT CAP	2						M8
16	T4935-54212	SWITCH, WIPER, RR	1						
17	02761-50060	NUT, FLANGE	1						M6XP1.0
18	T4520-54222	SWITCH WORKING LAMP	1						

----> Old replace New
<----> Interchangeable
* Please place an order assy(*)
<---- New replace Old
<-O-> Interchangeable with another part(s)
<-X-> Not interchangeable

https://tractormanualz.com/

TC2-G2M1002

TIRE GROUP(OPTION)

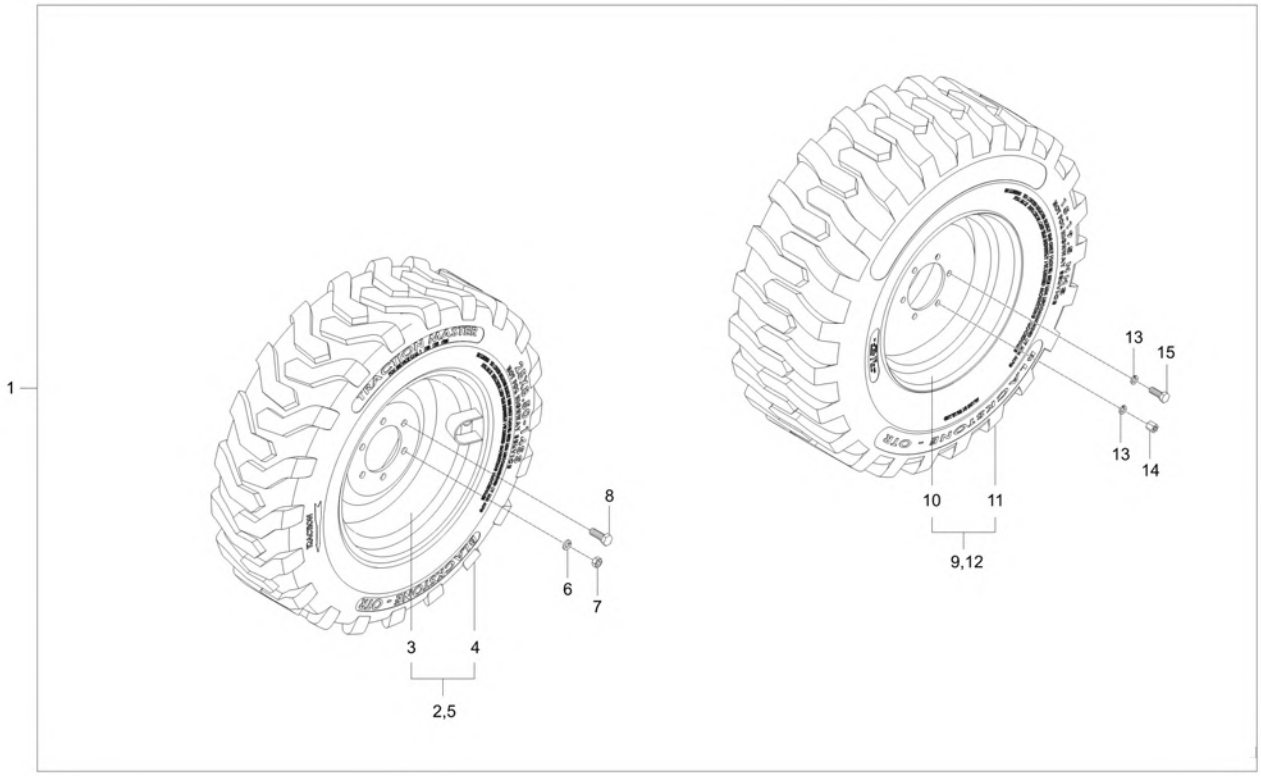

A : CK2610

No.	Part Number	Description	Qty A	Qty B	Qty C	Qty D	Qty E	I.C	Remark
1	T5855-A3021	TIRE	1						
2	T2187-49401	ASSY TIRE(LH)	1						
3	T2187-49421	ASSY WHEEL dnr v	1						
4	T2187-49431	TIRE	1						
5	T2187-49451	ASSY TIRE,60-FRONT	1						
6	04512-50120	SPRING WASHER	4						M12
7	02176-50120	NUT	4						M12XP1.25
8	01133-51225	BOLT, WASHER v	8						M12XP1.25
9	T2187-27611	ASSY,TIRE	1						
10	T2187-27621	ASSY WHEEL dnr v	1						
11	T2187-27631	TIRE	1						
12	T2187-27711	ASSY TIRE,60-FRONT	1						
13	04512-50160	WASHER, SPRING	12						M16
14	02076-50160	NUT	4						
15	01073-51630	BOLT v	8						M16XP1.5

----> Old replace New
<---- New replace Old
<-X-> Not interchangeable
<---> Interchangeable
<-O-> Interchangeable with another part(s)
* Please place an order assy(*)

https://tractormanualz.com/

TC2-G446021 DOUBLE ACTING VALVE GROUP

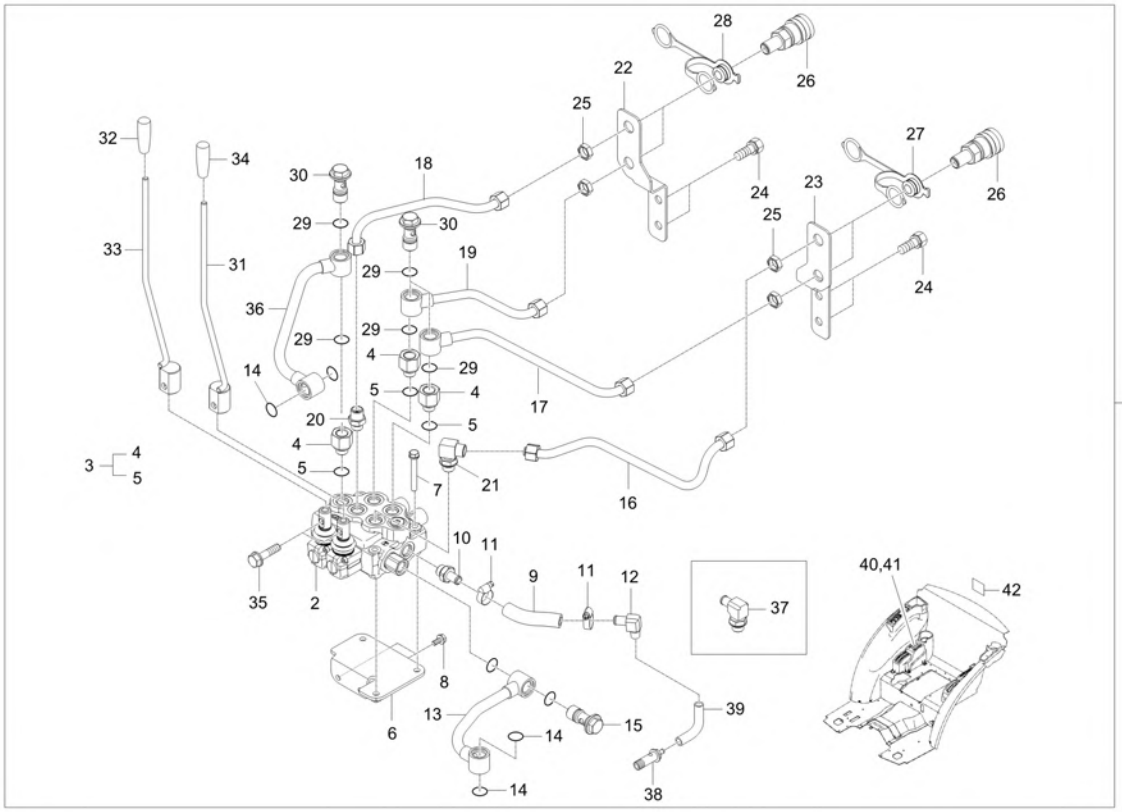

A : CK2610

No.	Part Number	Description	Qty A	Qty B	Qty C	Qty D	Qty E	I.C	Remark
1	TC24-A0022A	DOUBLE ACTING VALVE KIT (DETENT&SPRING)	1						
1	TC24-A0022C	DOUBLE ACTING VALVE KIT (DETENT&SPRING)	1					<----->	
1	TC24-A0022D	DOUBLE ACTING VALVE KIT (DETENT&SPRING)	1					<----->	
2	TC24-0020B	ASSY VALVE, DOUBLE ACTING-DS	1						
2	TC24-0241A		1					<----->	
2	TC24-0241B	ASSY VALVE, DOUBLE ACTING-DS	1					<----->	
3	T5855-47091	CONNECTION	3						
4	T5855-47091001	BODY	1						
5	04811-00140	O RING	1						
6	T5810-48013	BRACKET, VALVE	1						
7	01123-50860	WASHER BOLT	3						M8XP1.25
8	01123-50816	Hex Head Cap Screw	2						M8XP1.25
9	TC24-0078A	DRAIN HOSE	1						
10	T4715-47071	CONNECTOR	1						
11	F6800-91851	BAND, HOSE	2						12-22mm
12	T2185-66151	ELBOW	1						
13	T5810-48053	AUX HYD TUBE	1						
14	04816-00200	O RING	4						DIA19.8

----> Old replace New <---- New replace Old <-X-> Not interchangeable
<---> Interchangeable <-O-> Interchangeable with another part(s)
* Please place an order assy(*)

https://tractormanualz.com/

TC2-G446021 DOUBLE ACTING VALVE GROUP

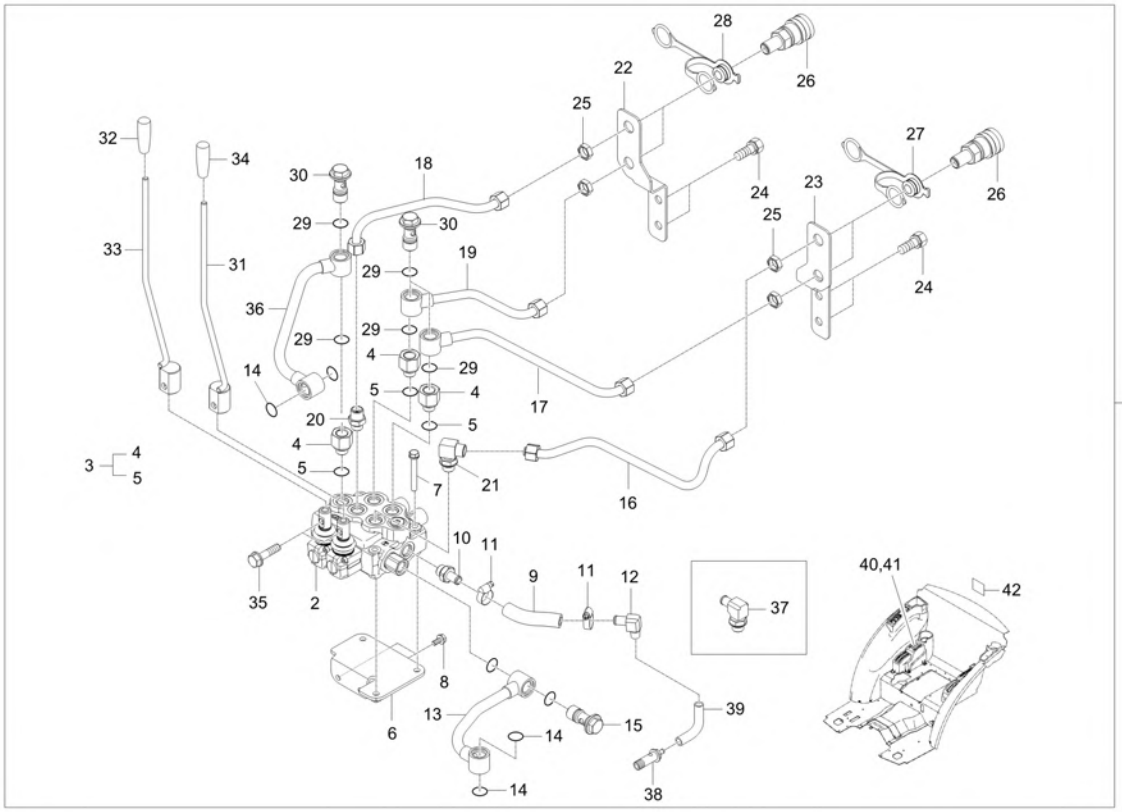

A : CK2610

No.	Part Number	Description	Qty A	Qty B	Qty C	Qty D	Qty E	I.C	Remark
14	04817-00200	O RING	4					<----->	DIA19.8
15	T4620-37092	JOINT BOLT v	1						
15	TC24-0238A	BOLT, JOINT	1					<----->	
16	T5810-48062	AUX HYD TUBE	1						
17	T5810-48072	AUX HYD TUBE	1						
18	T5810-48082	AUX HYD TUBE	1						
19	T5810-48092	AUX HYD TUBE	1						
20	T4810-47131	CONNECTOR v	1						
21	T4810-45761	ELBOW	1						
22	T5810-48022	SUPPORT, SOCKET	1						
23	T5810-48121	SUPPORT, SOCKET	1						3.2T
24	01133-51025	BOLT	4						M10XP1.25
25	T4930-47071	NUT	4						M18XP1.5
26	TD24-0159A	COUPLER, QUICK	4						
27	TF14-0122A	CAP, COUPLER SOCKET-1/2	2						1/2
28	TF14-0123A	CAP, COUPLER SOCKET-1/2	2						1/2
29	04816-00200	O RING	6						DIA19.8
29	04817-00200	O RING	6					<----->	DIA19.8

----> Old replace New <---- New replace Old <-X-> Not interchangeable
<---> Interchangeable <-O-> Interchangeable with another part(s)
* Please place an order assy(*)

https://tractormanualz.com/

TC2-G446021 DOUBLE ACTING VALVE GROUP

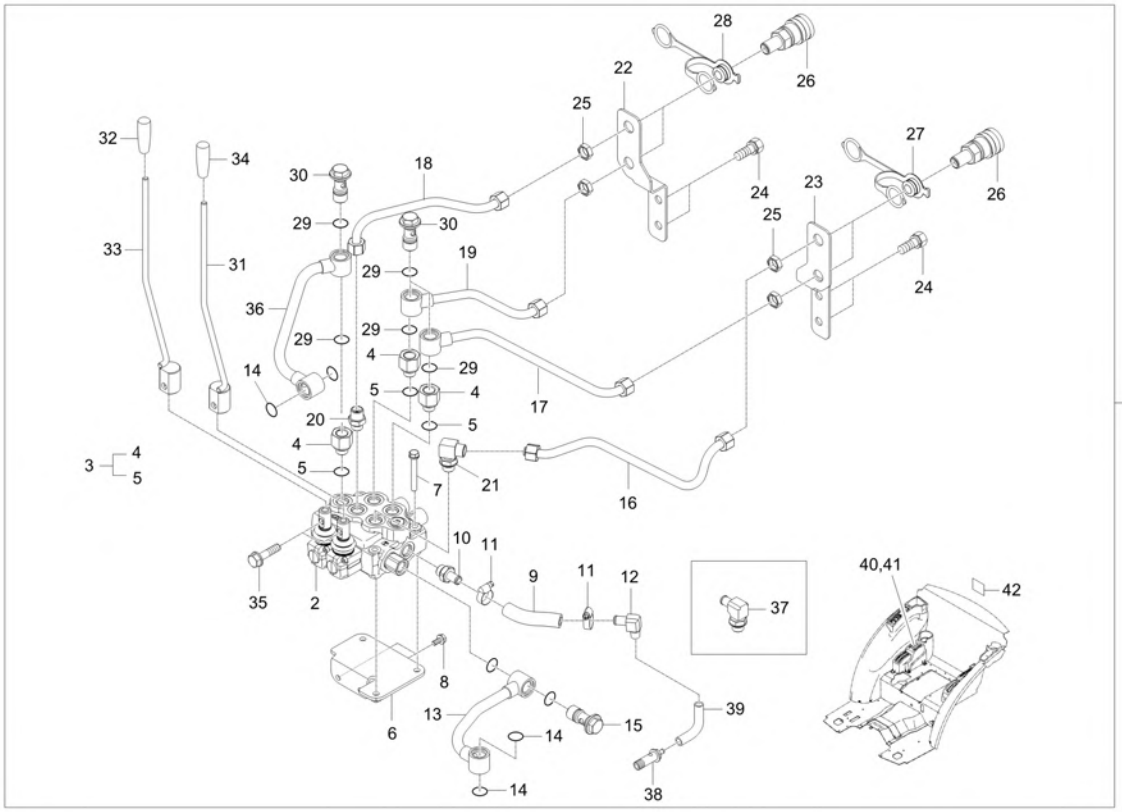

A : CK2610

No.	Part Number	Description	Qty A	Qty B	Qty C	Qty D	Qty E	I.C	Remark
30	T4620-37092	JOINT BOLT v	3						
30	TC24-0238A	BOLT, JOINT	3					<----->	
31	T5855-57012	LEVER, DOUBLE ACTING	1						-
32	T2660-71222	GRIP, GRAY v	1						
33	T5855-57022	LEVER, DOUBLE ACTING	1						
34	T2660-71242	GRIP, DARK BLUE CK2610	1						
35	01123-51030	BOLT	2						M10*1.5
36	T5857-48522	AUX HYD TUBE	1						
37	T4876-45162	ELBOW	1						
38	TC24-0075A	BOLT, JOINT-T v	1						
39	TC24-0076A	HOSE, HYD-T v	1						
40	TC26-1090A	LABEL, DOUBLE ACTING LEVER v	1						
41	TC26-1091A	LABEL, DOUBLE ACTING LEVER	1						
42	T2615-52131	LABEL COUPLER SOCKET	1						

----> Old replace New <---- New replace Old <-X-> Not interchangeable
<---> Interchangeable <-O-> Interchangeable with another part(s)
* Please place an order assy(*)

https://tractormanualz.com/

TC2-G6F4503

REAR VIEW MIRROR GROUP

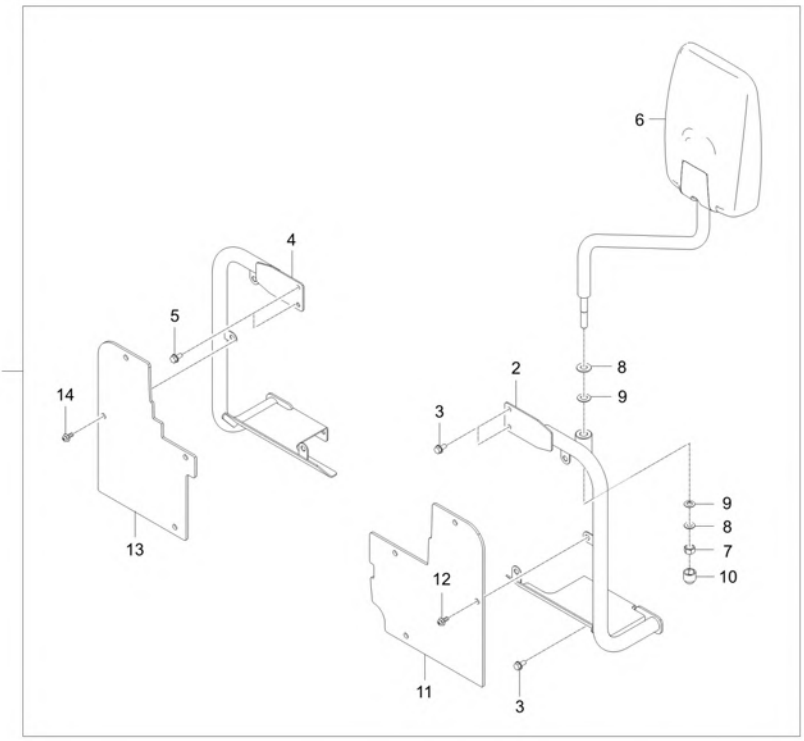

A : CK2610

No.	Part Number	Description	Qty A	Qty B	Qty C	Qty D	Qty E	I.C	Remark
1	TC26-A0010B	KIT, REAR VIEW MIRROR	1						
2	TC26-0070A	BRACKET, DIRECTION LAMP-LH	1						-
2	TC26-0070B	BRACKET, DIRECTION LAMP-LH	1					<--X-->	-
3	01754-50612	BOLT, FLANGE	4						M6XP1.0
4	TC26-0071A	BRACKET, DIRECTION LAMP-RH	1						-
4	TC26-0071B	BRACKET, DIRECTION LAMP RH	1					<--X-->	-
5	01754-50612	BOLT, FLANGE	4						M6XP1.0
6	T5565-88201	REAR VIEW MIRROR	1						
7	02176-50100	NUT v	1						M10XP1.25
8	04013-50100	PLAIN WASHER	2						M10
9	T4668-83301	SPRING	2						
10	T4815-93311	NUT, RUBBER	1						
11	T5850-62041	PLATE(LH)	1						T4.0
12	53650-6127-1	RIVET	4						
13	T5850-62051	COVER	1						T4.0
14	53650-6127-1	RIVET	4						

----> Old replace New
<---- New replace Old
<-X-> Not interchangeable
<---> Interchangeable
<-O-> Interchangeable with another part(s)
* Please place an order assy(*)

https://tractormanualz.com/

TC2-G6G1001

SUNSHADE GROUP

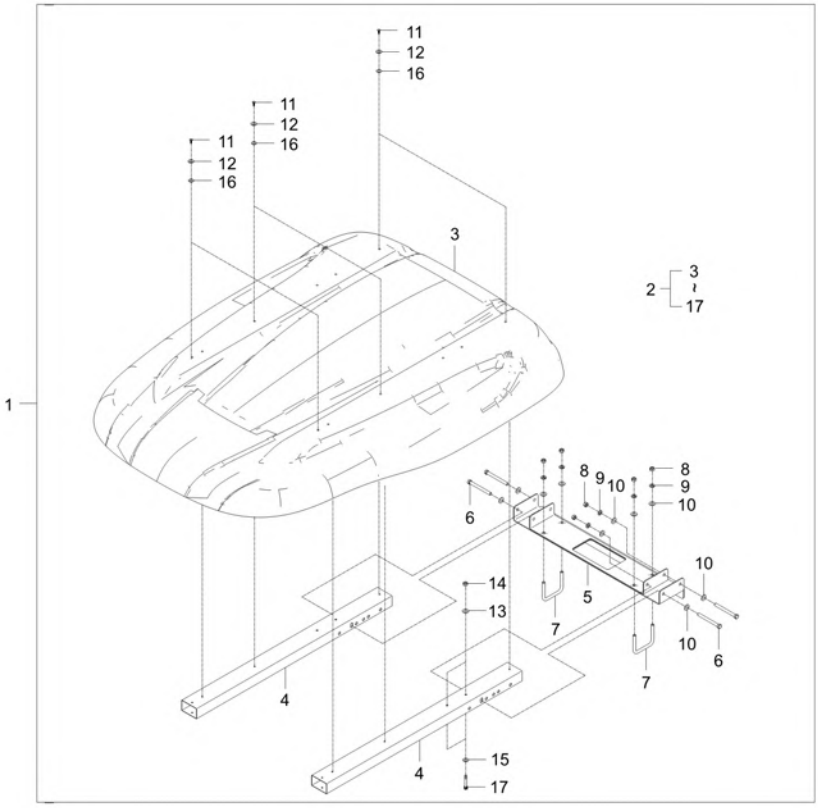

A : CK2610

No.	Part Number	Description	Qty A	Qty B	Qty C	Qty D	Qty E	I.C	Remark
1	T5710-A5083	SUN VISOR KIT ASSY	1						
2	T5710-59603	ASSY SUNSHADE dnr v	1						
3	T5710-59612	SUNSHADE	1						T5.0
4	T5710-59622	PIPE	2						75x45xT1.6
5	T5710-59633	ASSY, SUPPORT	1						
6	T2185-85101004	BOLT dnr v	4						M10XP1.5
7	T2185-85101005	U BOLT v	2						M10XP1.5
8	02014-50100	NUT	8						M10XP1.5
9	04013-50100	PLAIN WASHER	12						M10
10	04512-50100	SPRING WASHER	8						M10
11	38240-1883-1	TAPPING SCREW dnr v	8						M4X16
12	04015-50050	WASHER, PLAIN	8						M5
13	04015-50060	WASHER, PLAIN	4						M6
14	02751-50060	NUT, FLANGE	4						M6XP1.0
15	04013-50060	PLAIN WASHER	4						M6
16	T4682-65301	WASHER 2	12						
17	01023-50665	BOLT, WASHER	4						MEX10*76

----> Old replace New
<----> Interchangeable
* Please place an order assy(*)
<---- New replace Old
<-O-> Interchangeable with another part(s)
<-X-> Not interchangeable

https://tractormanualz.com/

TC2-G6G3301

FRONT ROPS GROUP(OPT.-US)

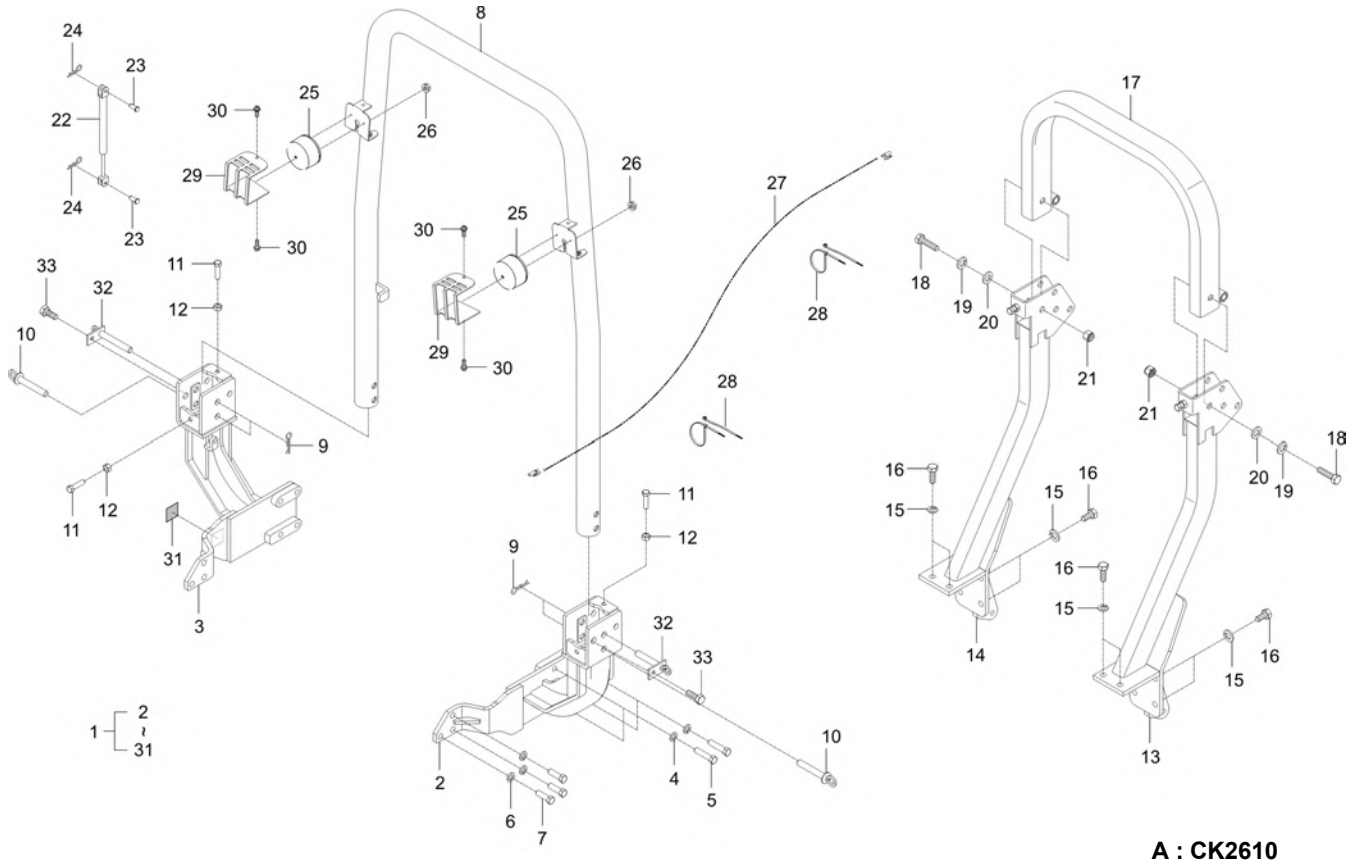

A : CK2610

No.	Part Number	Description	Qty A	Qty B	Qty C	Qty D	Qty E	I.C	Remark
1	TC26-A0092A	FRONT ROPS KIT(US)	1						
1	TC26-A0092B	FRONT ROPS KIT(US)	1					<--O-->	
1	TC26-A0092C	FRONT ROPS KIT(US)	1					<----->	
1	TC26-A0092D	FRONT ROPS KIT(US)	1					<------	
2	TC26-0943B	SUPPORT, ROPS-LH	1						-
2	TC26-0943C	SUPPORT, ROPS-LH	1					<--O-->	-
3	TC26-0947B	SUPPORT, ROPS-RH	1						-
3	TC26-0947C	SUPPORT, ROPS- RH v	1					<--O-->	-
4	04512-50140	SPRING WASHER	8						M14
5	01173-51455	BOLT	8						M14P1.5*55
6	04512-50140	SPRING WASHER	6						M14
7	01173-51435	BOLT v	6						M14XP1.5
8	TC26-1569A	ASSY ROPS-FR US	1						-
9	05515-51600	PIN, SNAP	4 ~ VL9400230						DIA16
9	05515-51600	PIN, SNAP	2					<--O-->	DIA16
10	T5738-55291	PIN	4						N
10	T5738-55291	PIN	2					<--O-->	N
11	T5710-55311	BOLT	4						M12XP1.75

----> Old replace New
<---- New replace Old
<-X-> Not interchangeable
<---> Interchangeable
<-O-> Interchangeable with another part(s)
* Please place an order assy(*)

https://tractormanualz.com/

TC2-G6G3301

FRONT ROPS GROUP(OPT.-US)

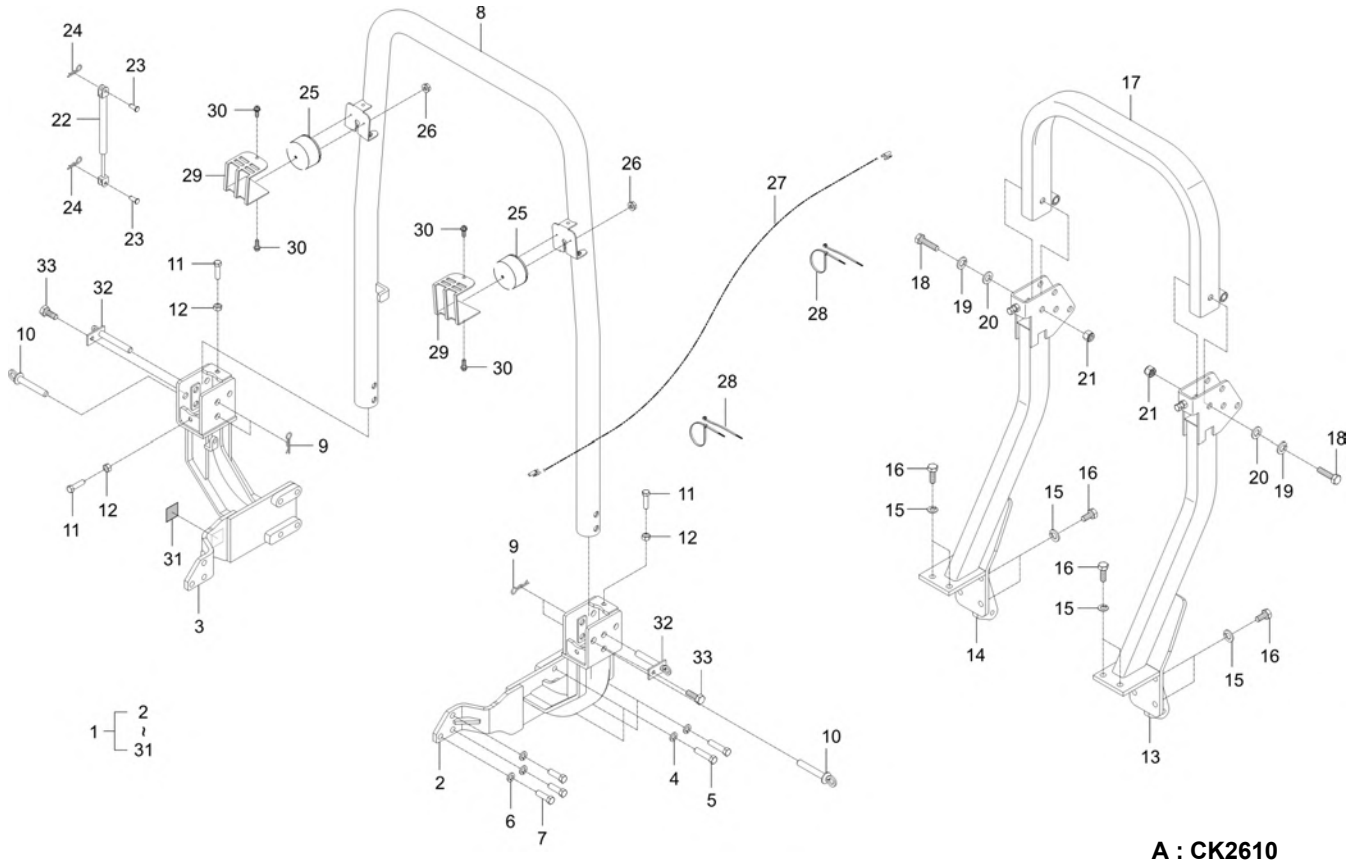

A : CK2610

No.	Part Number	Description	Qty A	Qty B	Qty C	Qty D	Qty E	I.C	Remark
12	02114-50120	NUT	4						M12*P1.75
13	TC26-1315A	SUPPORT, ROPS-LH	1						
14	T5810-66834	SUPPORT,RH	1						
15	04512-50140	SPRING WASHER	12						M14
16	T2230-85242	BOLT	12						M14*2.0*32
17	TC26-0948A	ASSY ROPS dnr v	1						-
17	TC26-0948B	ASSY ROPS v	1					<----->	-
18	01173-51690	BOLT	4						
19	04512-50160	WASHER, SPRING	4						M16
20	04011-50160	PLAIN WASHER	8						M16
21	T2181-97191	SELF LOCK NUT(M16)	4						
22	T5855-51881	ASS'Y, AIR CYLINDER	1						
23	05122-51025	JOINT PIN	2						DIA10*25
23	05122-51025	JOINT PIN	1					<------	DIA10*25
24	05515-51000	Split Pin	2						DIA10
25	TD25-0052A	ASSY LAMP, TURN SIGNAL	2						
26	02751-50050	FLANGE NUT	4						
27	TC25-0099A	WIRE HARNESS, CONNECTING DIRECTION LAMP	2						

----> Old replace New <---- New replace Old <-X-> Not interchangeable
<---> Interchangeable <-O-> Interchangeable with another part(s)
* Please place an order assy(*)

https://tractormanualz.com/

TC2-G6G3301

FRONT ROPS GROUP(OPT.-US)

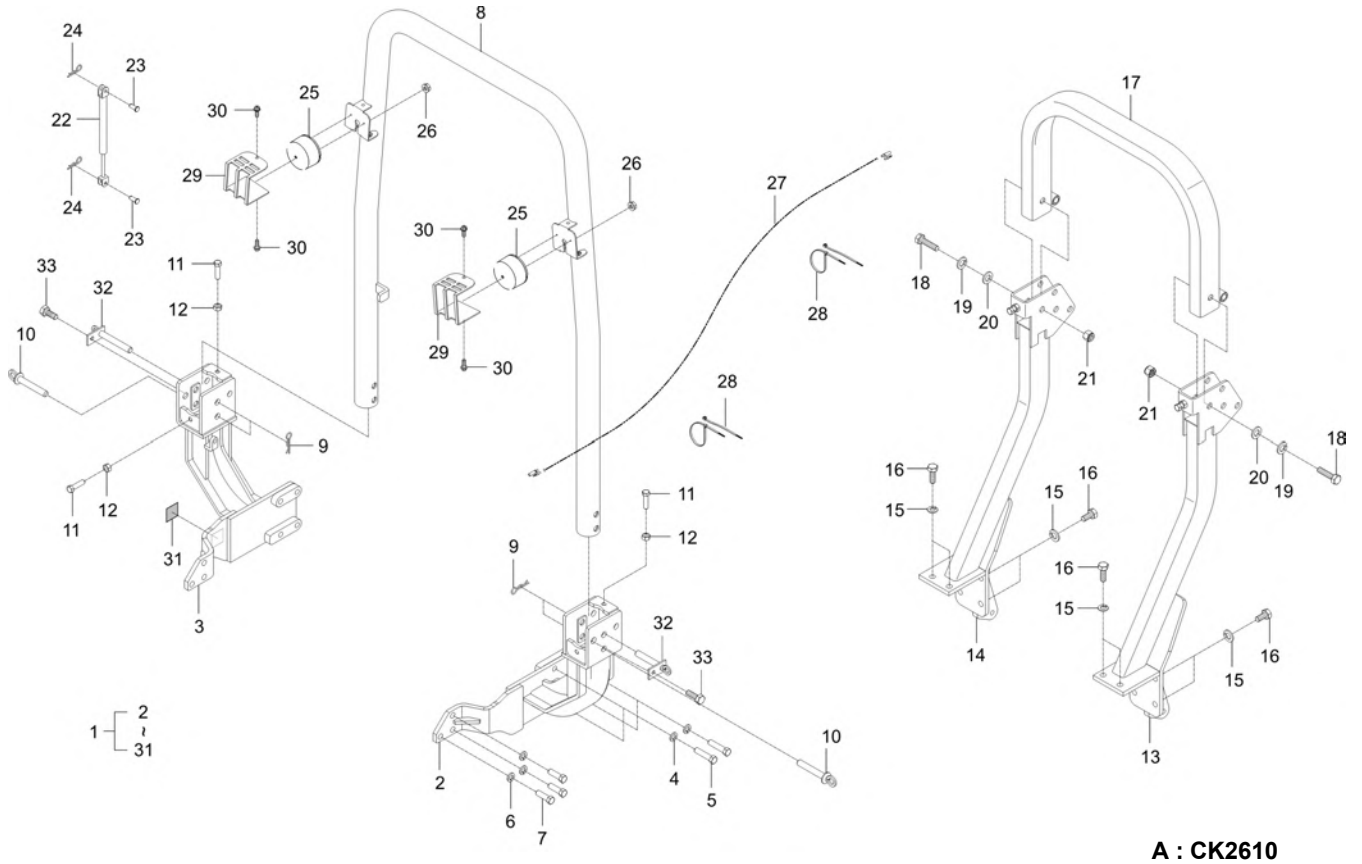

A : CK2610

No.	Part Number	Description	Qty A	Qty B	Qty C	Qty D	Qty E	I.C	Remark
28	T2185-82551	CABLE TIE, BLACK / 300	10						L290
29	TC26-1573A	BRACKET, COVER	2						T3.2
30	01205-50616	BOLT	6						M6XP1.0
31	TC26-1570A	LABEL, ROPS-ISO 12003-1	1						T0.5
32	TB16-0127B	FIXED PIN	2						
33	01123-50816	Hex Head Cap Screw	2						M8XP1.25
34	05122-51028	PIN, JOINT v	1						DIA10XL28
35	T4682-65311	WASHER 3	1						
36	04013-50100	PLAIN WASHER	1						M10

----> Old replace New
<----> Interchangeable
* Please place an order assy(*)
<---- New replace Old
<-O-> Interchangeable with another part(s)
<-X-> Not interchangeable

https://tractormanualz.com/

TC2-G6G4101 ARM REST GROUP(OPTION)

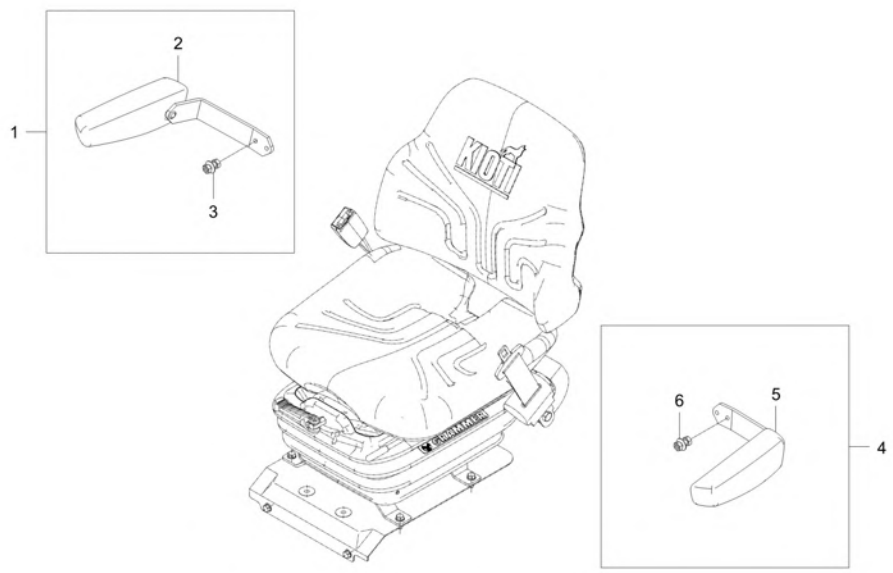

A : CK2610

No.	Part Number	Description	Qty A	Qty B	Qty C	Qty D	Qty E	I.C	Remark
1	TC26-A0113A	KIT, ARMREST-RH	1						
2	TC26-1782A	ARMREST-RH CPL	1						
3	TC26-1791A	FASTENER-ARMREST CPL	1						
4	TC26-A0114A	KIT, ARMREST-LH	1						
5	TC26-1783A	ARMREST-LH CPL	1						
6	TC26-1791A	FASTENER-ARMREST CPL	1						

----> Old replace New <---- New replace Old <-X-> Not interchangeable
<---> Interchangeable <-O-> Interchangeable with another part(s)
* Please place an order assy(*)

https://tractormanualz.com/

TC2-G632002

FRONT ROPS GROUP(OPTION)

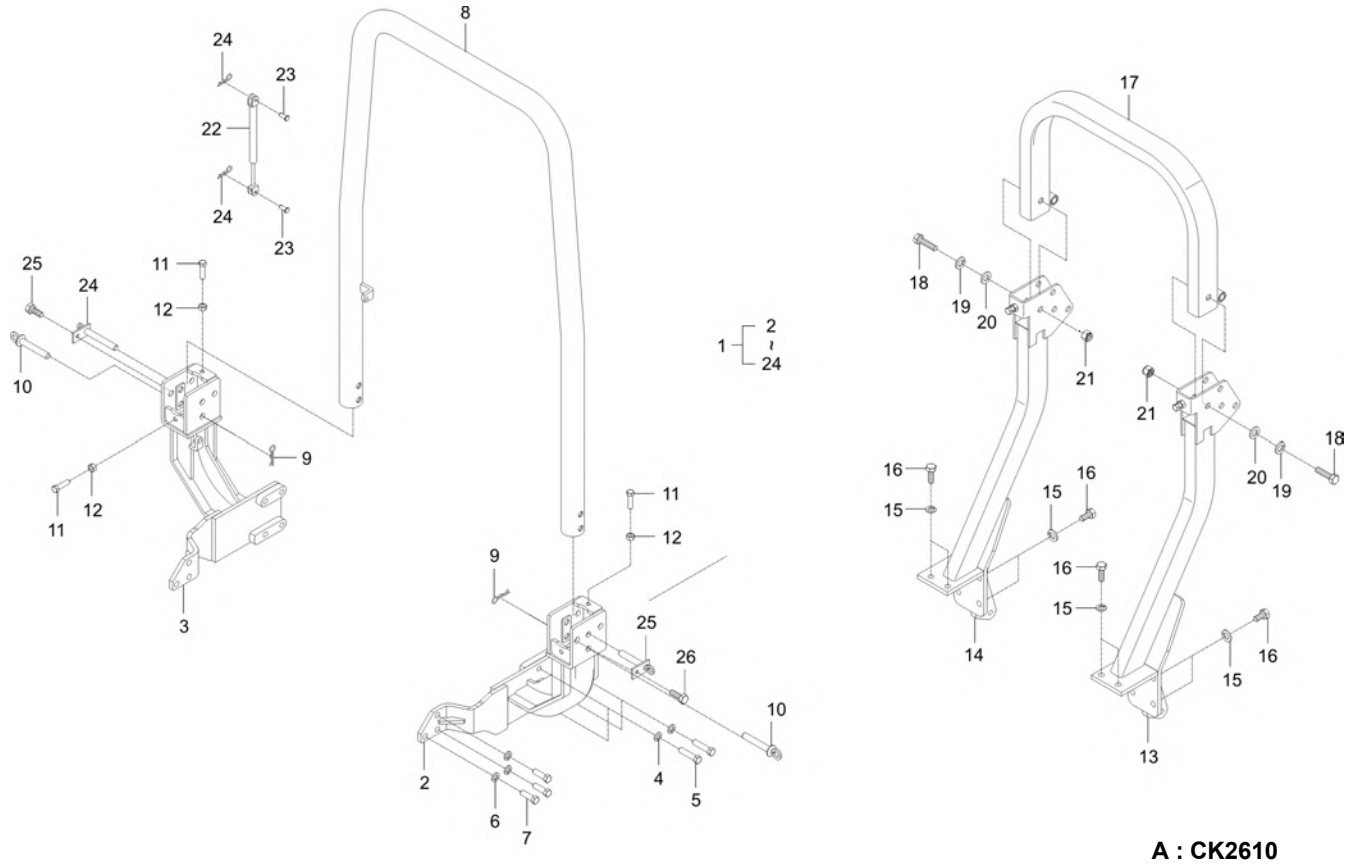

A : CK2610

No.	Part Number	Description	Qty A	Qty B	Qty C	Qty D	Qty E	I.C	Remark
1	TC26-A0060A	FRONT ROPS KIT	1						
1	TC26-A0060B	FRONT ROPS KIT	1					<--O-->	
1	TC26-A0060C	FRONT ROPS KIT	1					<----->	
2	TC26-0943B	SUPPORT, ROPS-LH	1						-
2	TC26-0943C	SUPPORT, ROPS-LH	1					<--O-->	-
3	TC26-0947B	SUPPORT, ROPS-RH	1						-
3	TC26-0947C	SUPPORT, ROPS- RH v	1					<--O-->	-
4	04512-50140	SPRING WASHER	8						M14
5	01173-51455	BOLT	8						M14P1.5*55
6	04512-50140	SPRING WASHER	6						M14
7	01173-51435	BOLT v	6						M14XP1.5
8	TC26-1187B	ASSY ROPS	1						-
9	05515-51600	PIN, SNAP	2						DIA16
9	05515-51600	PIN, SNAP	2					<--O-->	DIA16
10	T5738-55291	PIN	2						N
10	T5738-55291	PIN	2					<--O-->	N
11	T5710-55311TP	BOLT	4						M12XP1.75
12	02114-50120	NUT	4						M12*P1.75

----> Old replace New
<---- New replace Old
<-X-> Not interchangeable
<---> Interchangeable
<-O-> Interchangeable with another part(s)
* Please place an order assy(*)

https://tractormanualz.com/

TC2-G632002

FRONT ROPS GROUP(OPTION)

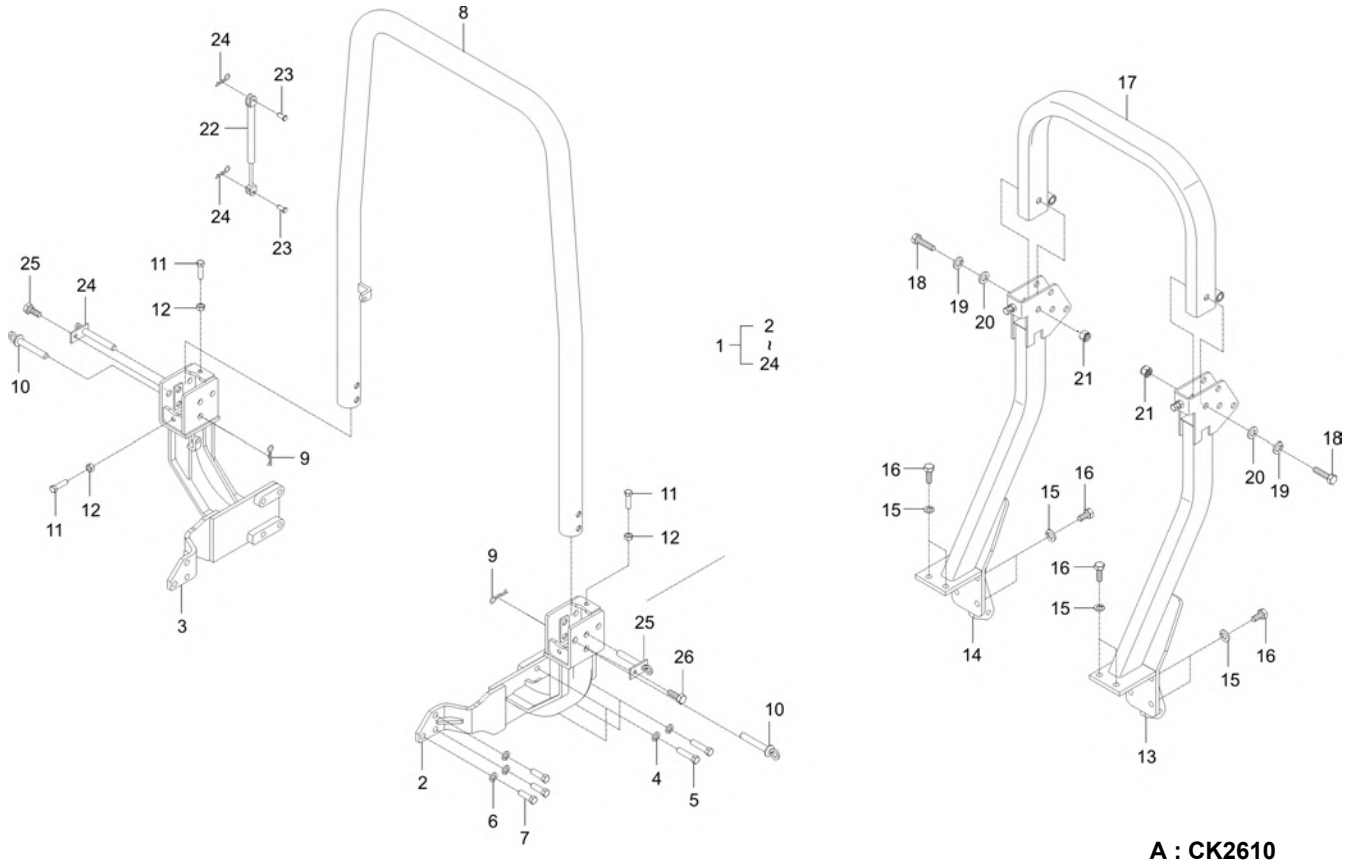

A : CK2610

No.	Part Number	Description	Qty A	Qty B	Qty C	Qty D	Qty E	I.C	Remark
13	TC26-1315A	SUPPORT, ROPS-LH	1						
14	T5810-66834	SUPPORT,RH	1						
15	04512-50140	SPRING WASHER	12						M14
16	T2230-85242	BOLT	12						M14*2.0*32
17	TC26-0948A	ASSY ROPS dnr v	1						-
17	TC26-0948B	ASSY ROPS v	1					<----->	-
18	01173-51690	BOLT	4						
19	04512-50160	WASHER, SPRING	4						M16
20	04011-50160	PLAIN WASHER	8						M16
21	T2181-97191	SELF LOCK NUT(M16)	4						
22	T5855-51881	ASS'Y, AIR CYLINDER	1						
23	05122-51025	JOINT PIN	2						DIA10*25
24	05515-51000	Split Pin	2						DIA10
25	TB16-0127B	FIXED PIN	2						
26	01123-50816	Hex Head Cap Screw	2						M8XP1.25

----> Old replace New
<----> Interchangeable
* Please place an order assy(*)
<---- New replace Old
<-O-> Interchangeable with another part(s)
<-X-> Not interchangeable

https://tractormanualz.com/

TC2-G2M1001

TIRE GROUP(OPTION)

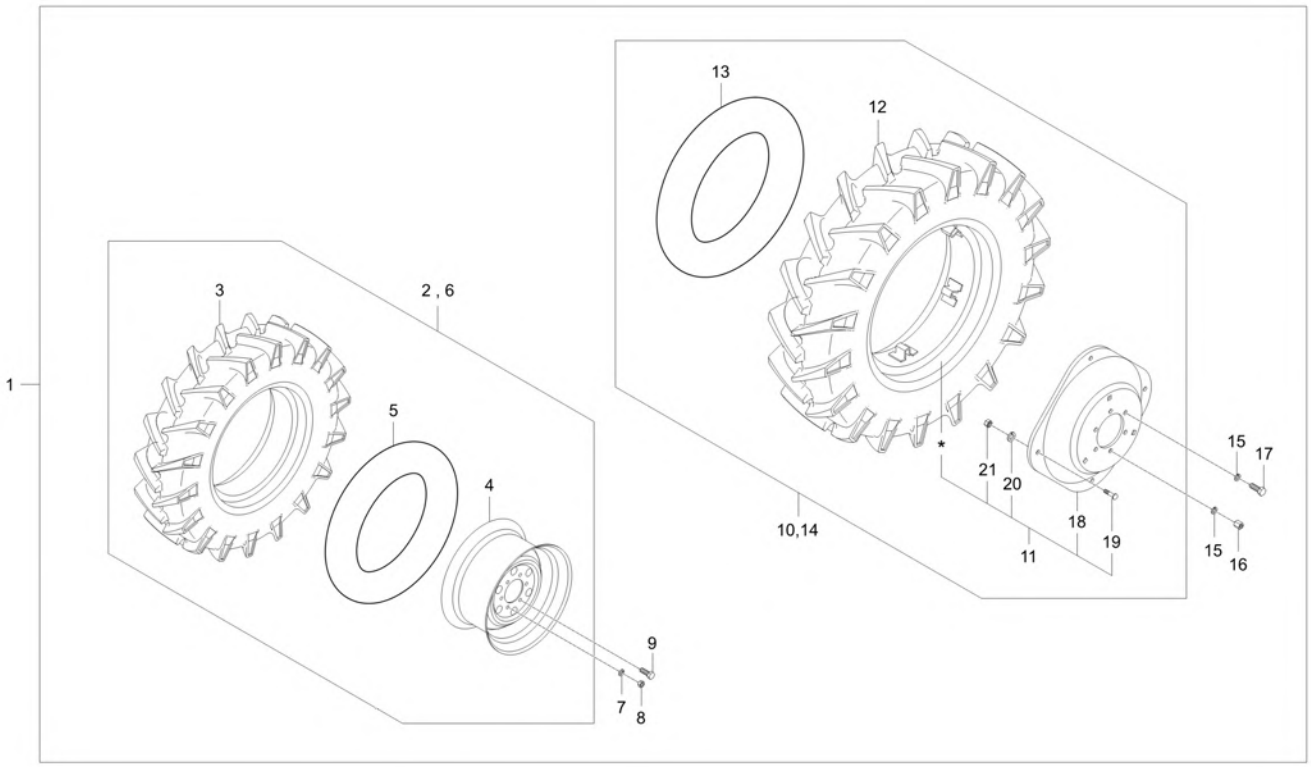

A : CK2610

No.	Part Number	Description	Qty A	Qty B	Qty C	Qty D	Qty E	I.C	Remark
1	T5855-A3001	TIRE	1						
2	T5815-49401	FRONT TIER ASSY	1						7-16
3	T2825-43741	TIRE, 7 16 7PLY FR	1						
4	T5815-49281	ASS'Y, RIM	1						
5	35225-4375-2	TUBE, 8X16	1						38580
6	T5815-49451	FRONT TIER ASSY	1						7-16
7	04512-50120	SPRING WASHER	4						M12
8	02176-50120	NUT	4						M12XP1.25
9	01133-51225	BOLT, WASHER v	8						M12XP1.25
10	T2540-27611	ASSY WHEEL, REAR LH	1						11.2-24 4
11	T2540-27722	WHEEL ASSY, RR	1						
12	T2540-27621	TIRE, 11.2X24 4H	1						11.2-24 4P FM2
13	T2540-27631	OB TUBE (11.2 x 24)	1						11.2-24
14	T2540-27711	ASSY WHEEL, REAR LH	1						11.2-24 4
15	04512-50160	WASHER, SPRING	12						M16
16	02076-50160	NUT	4						
17	01073-51630	BOLT v	8						M16XP1.5
18	T4240-27672	DISK	1						T8.0

----> Old replace New <---- New replace Old <-X-> Not interchangeable
<---> Interchangeable <-O-> Interchangeable with another part(s)
* Please place an order assy(*)

https://tractormanualz.com/

TC2-G2M1001

TIRE GROUP(OPTION)

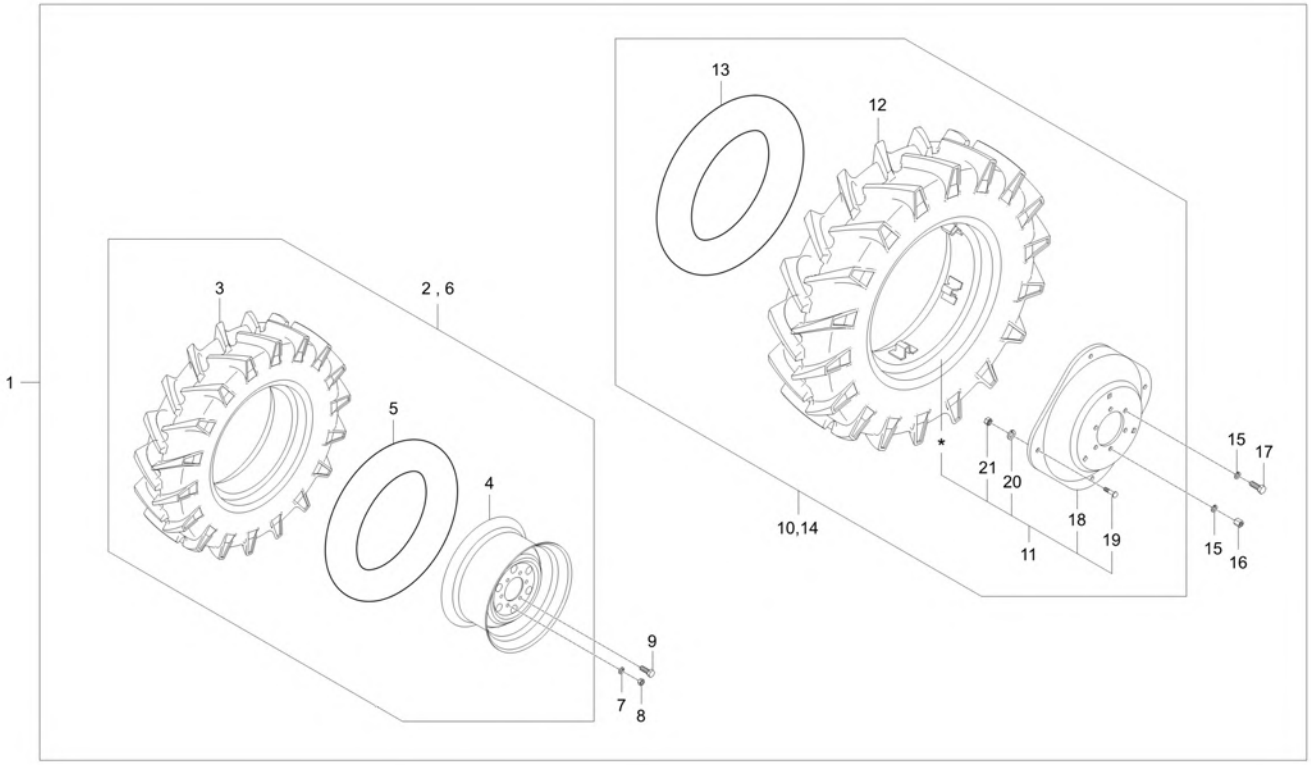

A : CK2610

No.	Part Number	Description	Qty A	Qty B	Qty C	Qty D	Qty E	I.C	Remark
19	31220-2768-4	BOLT	4						M16P1.5*40
20	T4620-49371	WASHER(PLATE)	4						
21	T4260-27691	NUT, LOCK v	4						

----> Old replace New
<---- New replace Old
<-X-> Not interchangeable
<---> Interchangeable
<-O-> Interchangeable with another part(s)
* Please place an order assy(*)

https://tractormanualz.com/

TC2-G446006 DOUBLE ACTING VALVE GROUP (SPRING)

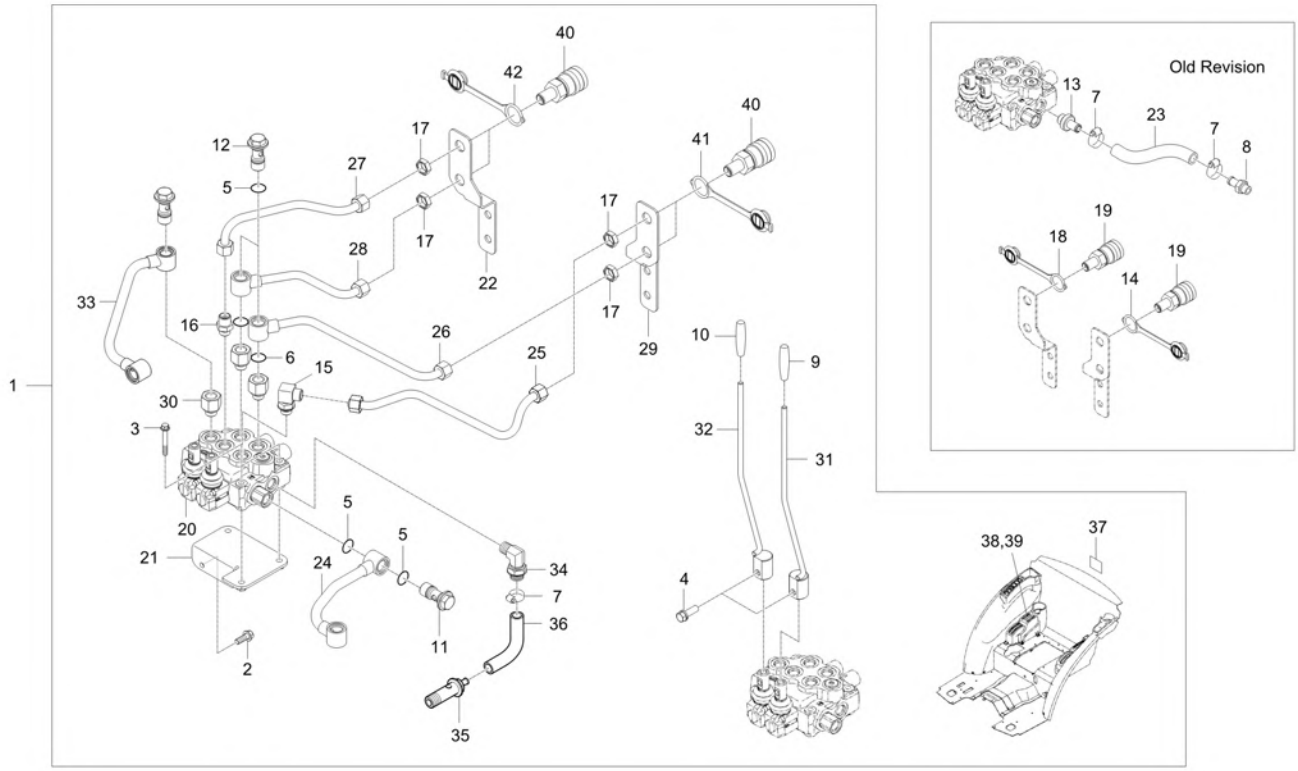

A : CK2610

No.	Part Number	Description	Qty A	Qty B	Qty C	Qty D	Qty E	I.C	Remark
1	TC24-A0004C	DOUBLE ACTING VALVE KIT(SPRING)	1						
1	TC24-A0004D	DOUBLE ACTING VALVE KIT(SPRING)	1					<--O-->	
1	TC24-A0004E	DOUBLE ACTING VALVE KIT(SPRING)	1					<------	
1	TC24-A0004F	DOUBLE ACTING VALVE KIT(SPRING)	1					<------	
1	TC24-A0004G	DOUBLE ACTING VALVE KIT(SPRING)	1					<----->	
1	TC24-A0004K	DOUBLE ACTING VALVE KIT(SPRING)	1					<----->	
1	TC24-A0004L	DOUBLE ACTING VALVE KIT(SPRING)	1					<----->	
2	01123-50816	Hex Head Cap Screw	2						M8XP1.25
3	01123-50860	WASHER BOLT	3						M8XP1.25
4	01123-51030	BOLT	2						M10*1.5
5	04810-00200	O RING v	4						DIA19.8
5	04817-00200	O RING	4					<----->	DIA19.8
6	04810-00200	O RING v	6						DIA19.8
6	04817-00200	O RING	6					<----->	DIA19.8
7	52200-2523-1	HOSBAND	2 ~ TL9400048						
7	F6800-91851	BAND, HOSE	2 TL9400049 ~ WL9400080					<----->	12-22mm
8	T2185-66151	ELBOW	1						
9	T2660-71221	GRIP GRAY dnr v	1						

----> Old replace New
<---- New replace Old
<-X-> Not interchangeable
<---> Interchangeable
<-O-> Interchangeable with another part(s)
* Please place an order assy(*)

https://tractormanualz.com/

TC2-G446006 DOUBLE ACTING VALVE GROUP (SPRING)

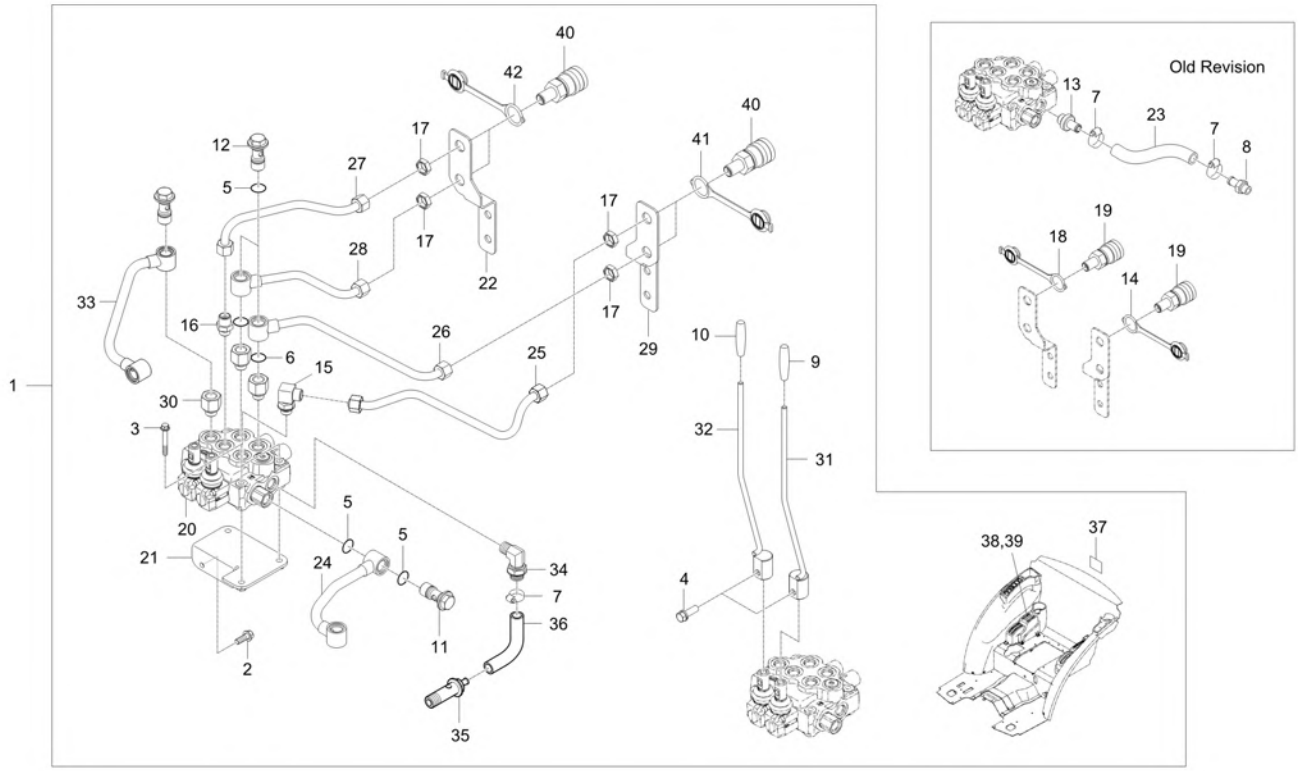

A : CK2610

No.	Part Number	Description	Qty A	Qty B	Qty C	Qty D	Qty E	I.C	Remark
10	T2660-71241	GRIP, DARK BLUE	1						
11	T4620-37092	JOINT BOLT v	1						
11	TC24-0238A	BOLT, JOINT	1					<----->	
12	T4620-37092	JOINT BOLT v	3						
12	TC24-0238A	BOLT, JOINT	3					<----->	
13	T4715-47071	CONNECTOR	1						
14	T4720-90081	DUST-CAP	2						
15	T4810-45761	ELBOW	1						
16	T4810-47131	CONNECTOR v	1						
17	T4930-47071	NUT	4						M18XP1.5
18	T5520-90071	CAP, SOCKET	2						1/2
19	T5710-30091	COUPLER,SELF-SEALING,AC,1-1-4 v	4						
20	T5810-48002	DOUBLE ACTING VALVE	1						
20	T5810-48003	Double Acting Valve	1					<----->	
21	T5810-48013	BRACKET, VALVE	1						
22	T5810-48022	SUPPORT, SOCKET	1						
23	TC24-0078A	DRAIN HOSE	1						
24	T5810-48052	TUBE A HYD OUT CA	1						

----> Old replace New
<---- New replace Old
<-X-> Not interchangeable
<---> Interchangeable
<-O-> Interchangeable with another part(s)
* Please place an order assy(*)

https://tractormanualz.com/

TC2-G446006 DOUBLE ACTING VALVE GROUP (SPRING)

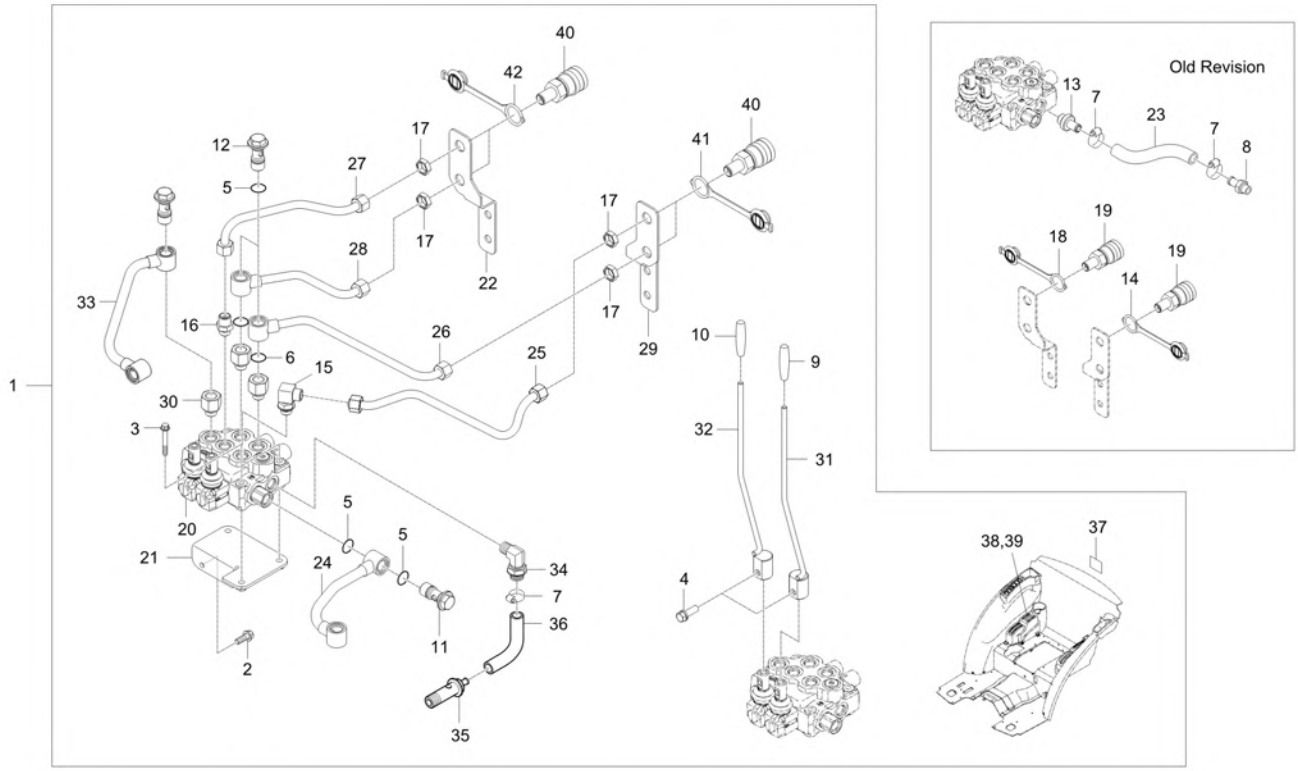

A : CK2610

No.	Part Number	Description	Qty A	Qty B	Qty C	Qty D	Qty E	I.C	Remark
24	T5810-48053	AUX HYD TUBE	1					<----->	
25	T5810-48062	AUX HYD TUBE	1						
26	T5810-48072	AUX HYD TUBE	1						
27	T5810-48082	AUX HYD TUBE	1						
28	T5810-48092	AUX HYD TUBE	1						
29	T5810-48121	SUPPORT, SOCKET	1						3.2T
30	T5855-47091	CONNECTION	3						
31	T5855-57012	LEVER, DOUBLE ACTING	1						-
32	T5855-57022	LEVER, DOUBLE ACTING	1						
33	T5857-48522	AUX HYD TUBE	1						
34	T4876-45162	ELBOW	1						
35	TC24-0075A	BOLT, JOINT-T v	1						
36	TC24-0076A	HOSE, HYD-T v	1						
37	T2615-52131	LABEL COUPLER SOCKET	1						
38	TC26-1090A	LABEL, DOUBLE ACTING LEVER v	1						
39	TC26-1091A	LABEL, DOUBLE ACTING LEVER	1						
40	TD24-0159A	COUPLER, QUICK	4						
41	TF14-0122A	CAP, COUPLER SOCKET-1/2	2						1/2

----> Old replace New <---- New replace Old <-X-> Not interchangeable
<---> Interchangeable <-O-> Interchangeable with another part(s)
* Please place an order assy(*)

https://tractormanualz.com/

TC2-G446006 DOUBLE ACTING VALVE GROUP (SPRING)

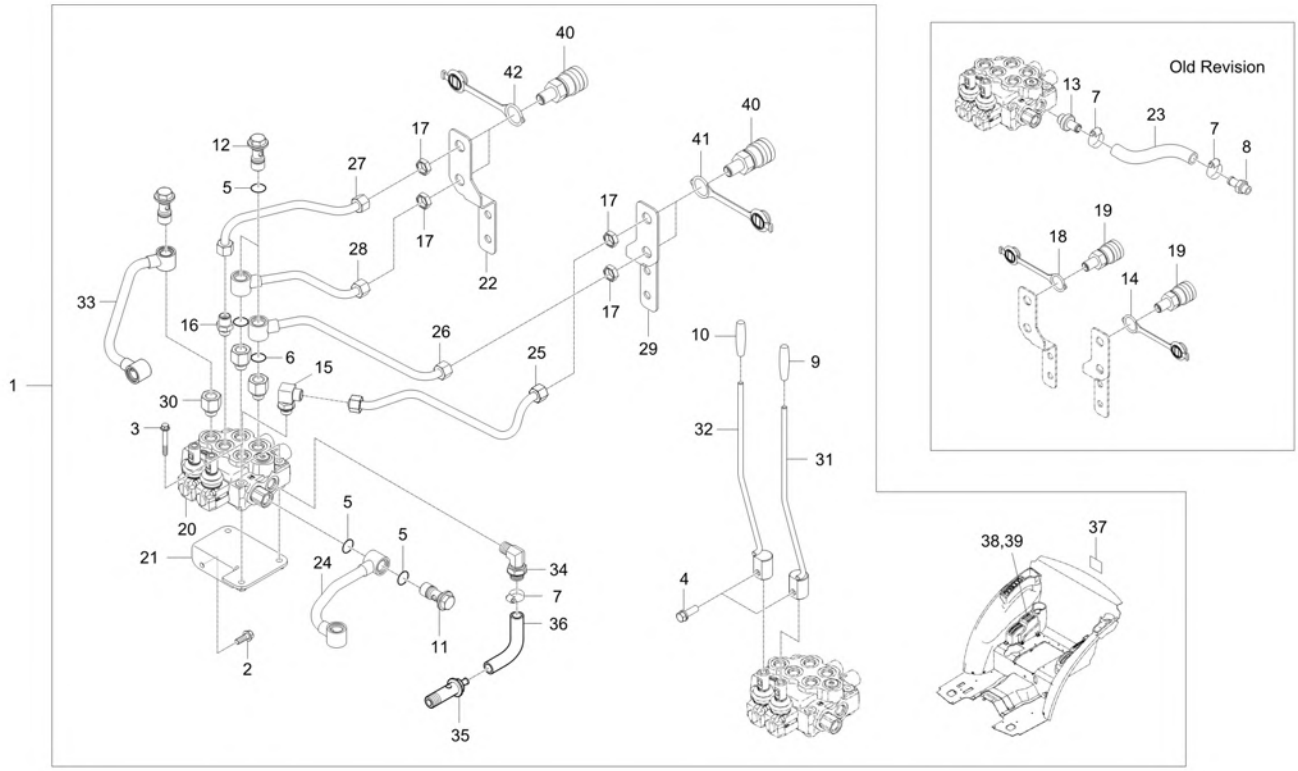

A : CK2610

No.	Part Number	Description	Qty A	Qty B	Qty C	Qty D	Qty E	I.C	Remark
42	TF14-0123A	CAP, COUPLER SOCKET-1/2	2						1/2

----> Old replace New
<----> Interchangeable
* Please place an order assy(*)
<---- New replace Old
<-O-> Interchangeable with another part(s)
<-X-> Not interchangeable

https://tractormanualz.com/

TC2-G446007 DOUBLE ACTING VALVE GROUP (DETENT)

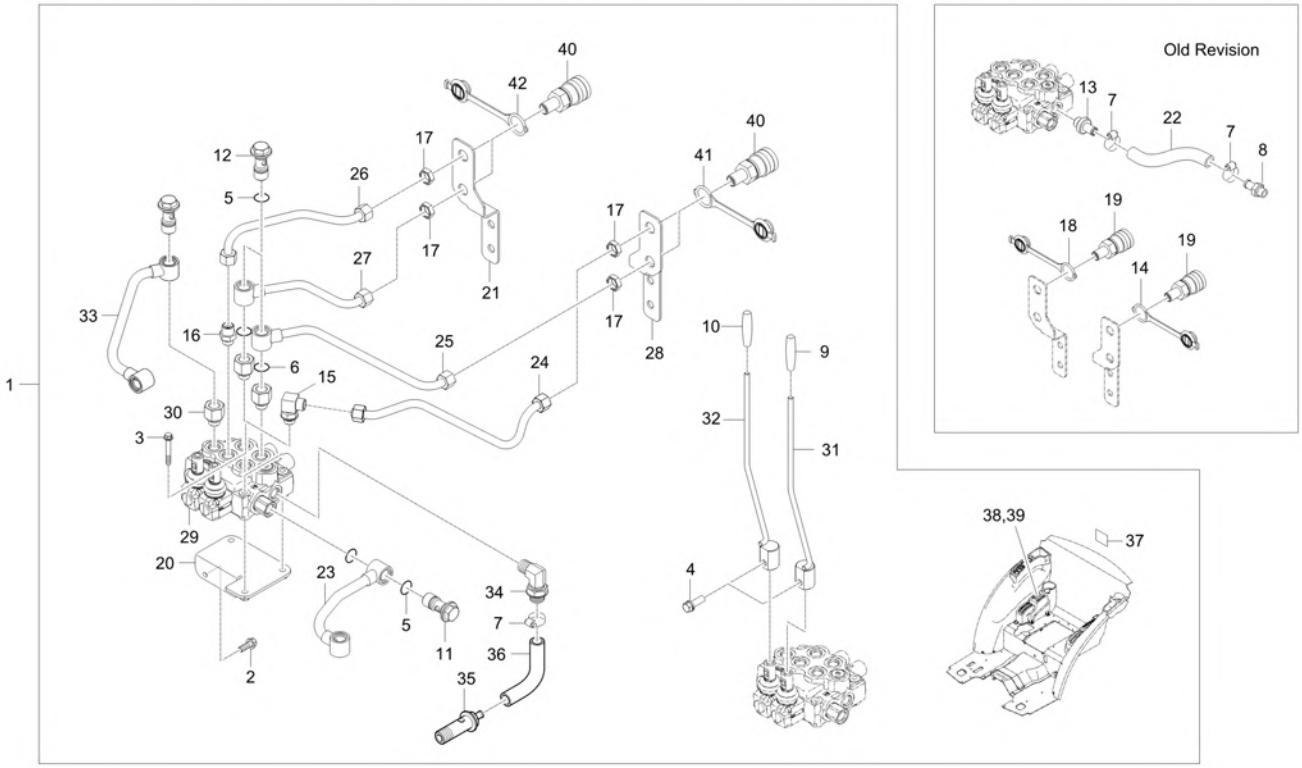

A : CK2610

No.	Part Number	Description	Qty A	Qty B	Qty C	Qty D	Qty E	I.C	Remark
1	TC24-A0005C	DOUBLE ACTING VALVE KIT(DETENT)	1						
1	TC24-A0005D	DOUBLE ACTING VALVE KIT(DETENT)	1					<--O-->	
1	TC24-A0005E	DOUBLE ACTING VALVE KIT(DETENT)	1					<------	
1	TC24-A0005F	DOUBLE ACTING VALVE KIT(DETENT)	1					<------	
1	TC24-A0005G	DOUBLE ACTING VALVE KIT(DETENT)	1					<----->	
1	TC24-A0005K	DOUBLE ACTING VALVE KIT(DETENT)	1					<----->	
1	TC24-A0005L	DOUBLE ACTING VALVE KIT(DETENT)	1					<----->	
1	TC24-A0005M	DOUBLE ACTING VALVE KIT(DETENT)	1					<----->	
2	01123-50816	Hex Head Cap Screw	2						M8XP1.25
3	01123-50860	WASHER BOLT	3						M8XP1.25
4	01123-51030	BOLT	2						M10*1.5
5	04810-00200	O RING v	4						DIA19.8
5	04817-00200	O RING	4					<----->	DIA19.8
6	04810-00200	O RING v	6						DIA19.8
6	04817-00200	O RING	6					<----->	DIA19.8
7	52200-2523-1	HOSBAND	2						
7	F6800-91851	BAND, HOSE	2					<----->	12-22mm
8	T2185-66151	ELBOW	1						

----> Old replace New <---- New replace Old <-X-> Not interchangeable
<---> Interchangeable <-O-> Interchangeable with another part(s)
* Please place an order assy(*)

https://tractormanualz.com/

TC2-G446007 DOUBLE ACTING VALVE GROUP (DETENT)

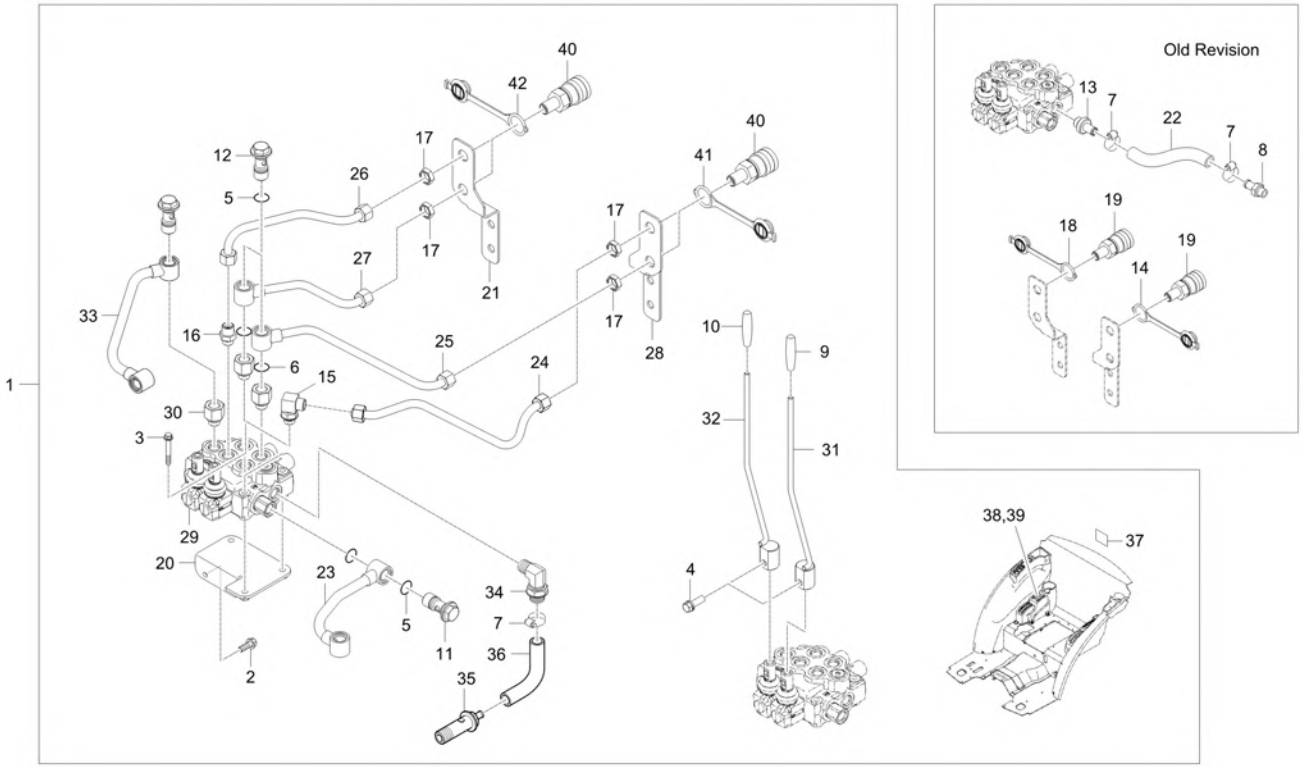

A : CK2610

No.	Part Number	Description	Qty A	Qty B	Qty C	Qty D	Qty E	I.C	Remark
9	T2660-71221	GRIP GRAY dnr v	1						
10	T2660-71241	GRIP, DARK BLUE	1						
11	T4620-37092	JOINT BOLT v	1						
11	TC24-0238A	BOLT, JOINT	1					<----->	
12	T4620-37092	JOINT BOLT v	3						
12	TC24-0238A	BOLT, JOINT	3					<----->	
13	T4715-47071	CONNECTOR	1						
14	T4720-90081	DUST-CAP	2						
15	T4810-45761	ELBOW	1						
16	T4810-47131	CONNECTOR v	1						
17	T4930-47071	NUT	4						M18XP1.5
18	T5520-90071	CAP, SOCKET	2						1/2
19	T5710-30091	COUPLER,SELF-SEALING,AC,1-1-4 v	4						
20	T5810-48013	BRACKET, VALVE	1						
21	T5810-48022	SUPPORT, SOCKET	1						
22	TC24-0078A	DRAIN HOSE	1						
23	T5810-48052	TUBE A HYD OUT CA	1						
23	T5810-48053	AUX HYD TUBE	1					<----->	

----> Old replace New
<----> Interchangeable
* Please place an order assy(*)
<---- New replace Old
<-O-> Interchangeable with another part(s)
<-X-> Not interchangeable

https://tractormanualz.com/

TC2-G446007 DOUBLE ACTING VALVE GROUP (DETENT)

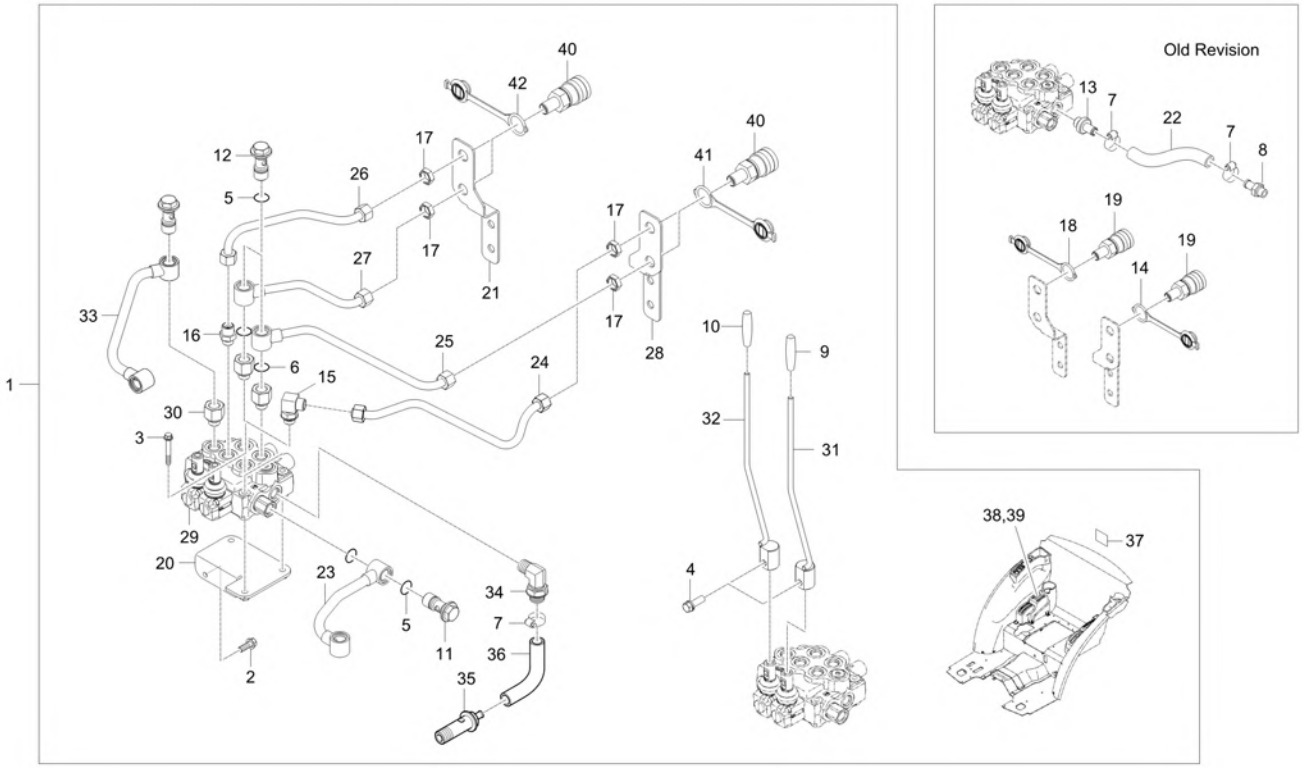

A : CK2610

No.	Part Number	Description	Qty A	Qty B	Qty C	Qty D	Qty E	I.C	Remark
24	T5810-48062	AUX HYD TUBE	1						
25	T5810-48072	AUX HYD TUBE	1						
26	T5810-48082	AUX HYD TUBE	1						
27	T5810-48092	AUX HYD TUBE	1						
28	T5810-48121	SUPPORT, SOCKET	1						3.2T
29	T5817-48002	Double Acting Valve dnr v	1						
30	T5855-47091	CONNECTION	3						
31	T5855-57012	LEVER, DOUBLE ACTING	1						-
32	T5855-57022	LEVER, DOUBLE ACTING	1						
33	T5857-48522	AUX HYD TUBE	1						
34	TC24-0075A	BOLT, JOINT-T v	1						
35	TC24-0076A	HOSE, HYD-T v	1						
36	T4876-45162	ELBOW	1						
37	T2615-52131	LABEL COUPLER SOCKET	1						
38	TC26-1090A	LABEL, DOUBLE ACTING LEVER v	1						
39	TC26-1091A	LABEL, DOUBLE ACTING LEVER	1						
40	TD24-0159A	COUPLER, QUICK	4						
41	TF14-0122A	CAP, COUPLER SOCKET-1/2	2						1/2

----> Old replace New <---- New replace Old <-X-> Not interchangeable
<---> Interchangeable <-O-> Interchangeable with another part(s)
* Please place an order assy(*)

https://tractormanualz.com/

TC2-G446007 DOUBLE ACTING VALVE GROUP (DETENT)

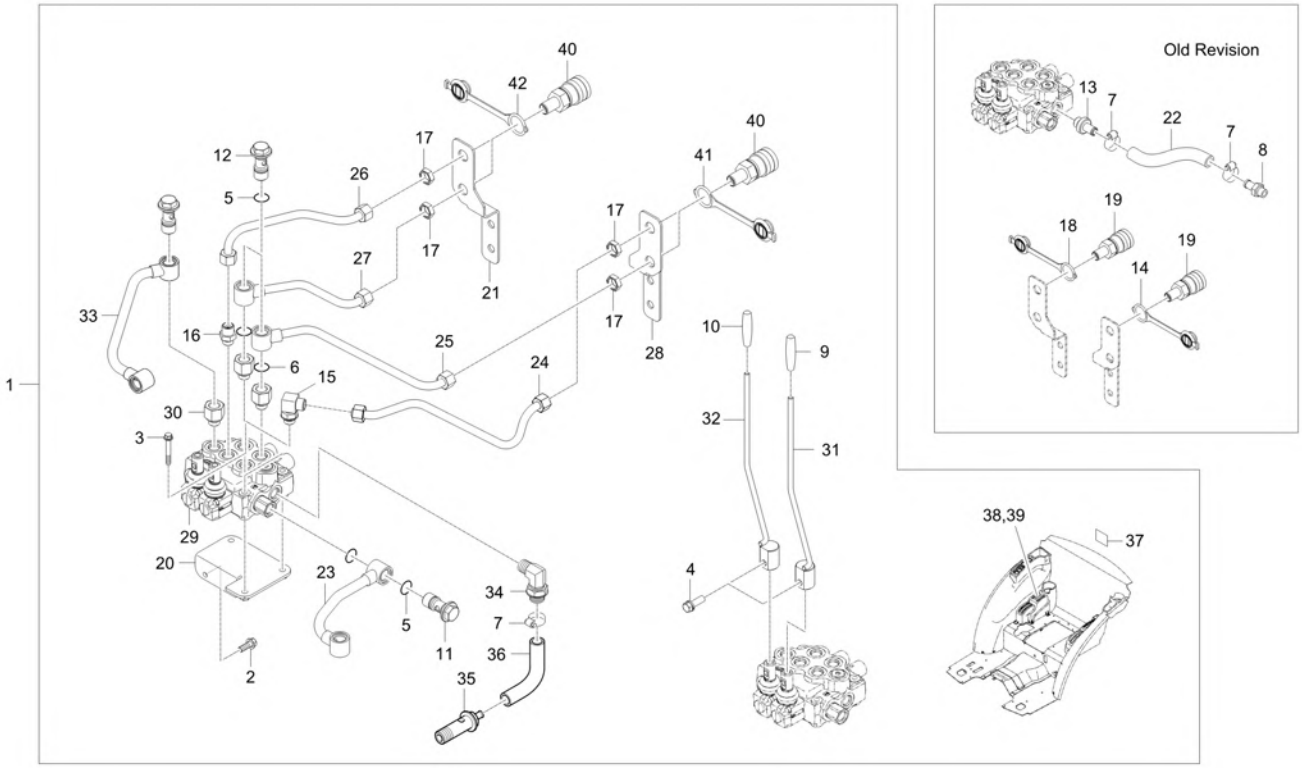

A : CK2610

No.	Part Number	Description	Qty A	Qty B	Qty C	Qty D	Qty E	I.C	Remark
42	TF14-0123A	CAP, COUPLER SOCKET-1/2	2						1/2

----> Old replace New
<---- New replace Old
<-X-> Not interchangeable
<---> Interchangeable
<-O-> Interchangeable with another part(s)
* Please place an order assy(*)

https://tractormanualz.com/

TC2-G446008

DOUBLE ACTING VALVE GROUP

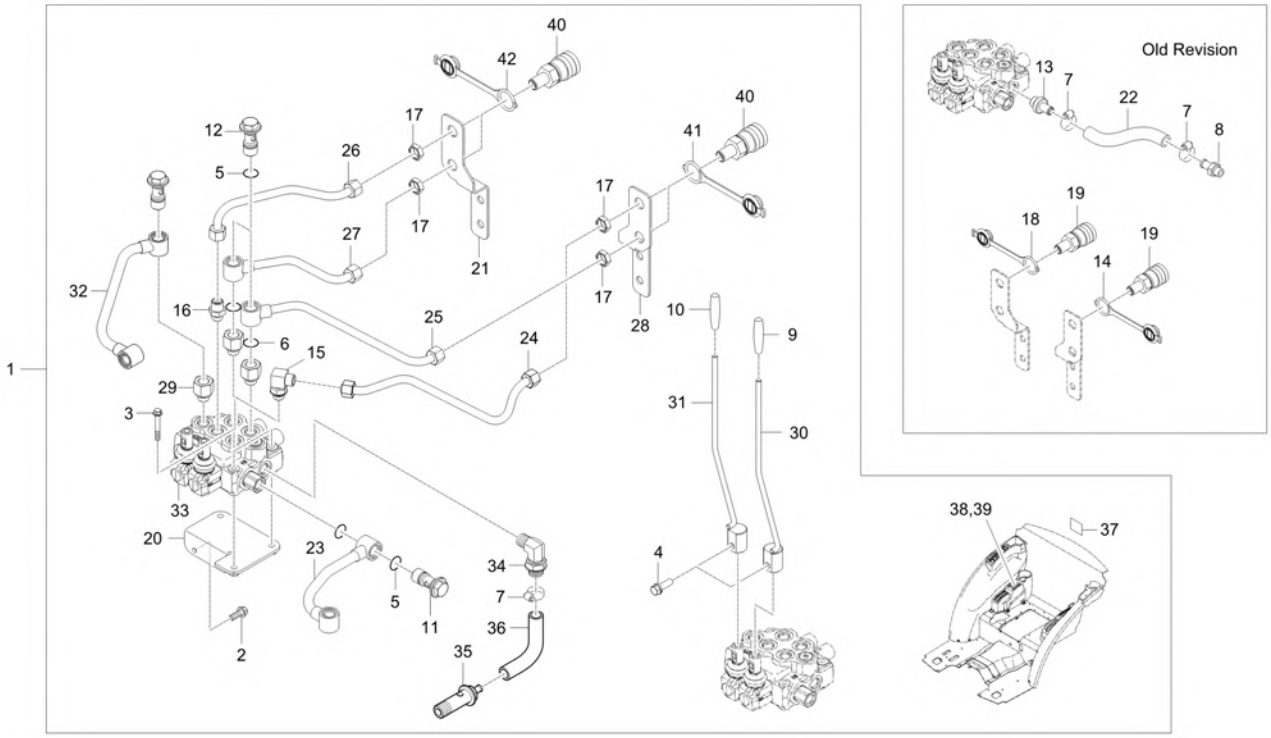

A : CK2610

No.	Part Number	Description	Qty A	Qty B	Qty C	Qty D	Qty E	I.C	Remark
1	TC24-A0006C	DOUBLE ACTING VALVE KIT (DETENT&SPRING)	1						
1	TC24-A0006D	DOUBLE ACTING VALVE KIT (DETENT&SPRING)	1					<--O-->	
1	TC24-A0006E	DOUBLE ACTING VALVE KIT (DETENT&SPRING)	1					<------	
1	TC24-A0006F	DOUBLE ACTING VALVE KIT (DETENT&SPRING)	1					<------	
1	TC24-A0006G	DOUBLE ACTING VALVE KIT (DETENT&SPRING)	1					<----->	
1	TC24-A0006H	DOUBLE ACTING VALVE KIT (DETENT&SPRING)	1					<----->	
1	TC24-A0006I	DOUBLE ACTING VALVE KIT (DETENT&SPRING)	1					<----->	
1	TC24-A0006J	DOUBLE ACTING VALVE KIT (DETENT&SPRING)	1					<----->	
1	TC24-A0006K	DOUBLE ACTING VALVE KIT (DETENT&SPRING)	1					<----->	
1	TC24-A0006L	DOUBLE ACTING VALVE KIT (DETENT&SPRING)	1					<----->	
1	TC24-A0006M	DOUBLE ACTING VALVE KIT (DETENT&SPRING)	1					<----->	
1	TC24-A0006N	DOUBLE ACTING VALVE KIT (DETENT&SPRING)	1					<----->	
2	01123-50816	Hex Head Cap Screw	2						M8XP1.25
3	01123-50860	WASHER BOLT	3						M8XP1.25
4	01123-51030	BOLT	2						M10*1.5
5	04810-00200	O RING v	4						DIA19.8
5	04817-00200	O RING	4					<----->	DIA19.8
6	04810-00200	O RING v	6						DIA19.8

----> Old replace New
<---- New replace Old
<-X-> Not interchangeable
<---> Interchangeable
<-O-> Interchangeable with another part(s)
* Please place an order assy(*)

https://tractormanualz.com/

TC2-G446008 DOUBLE ACTING VALVE GROUP

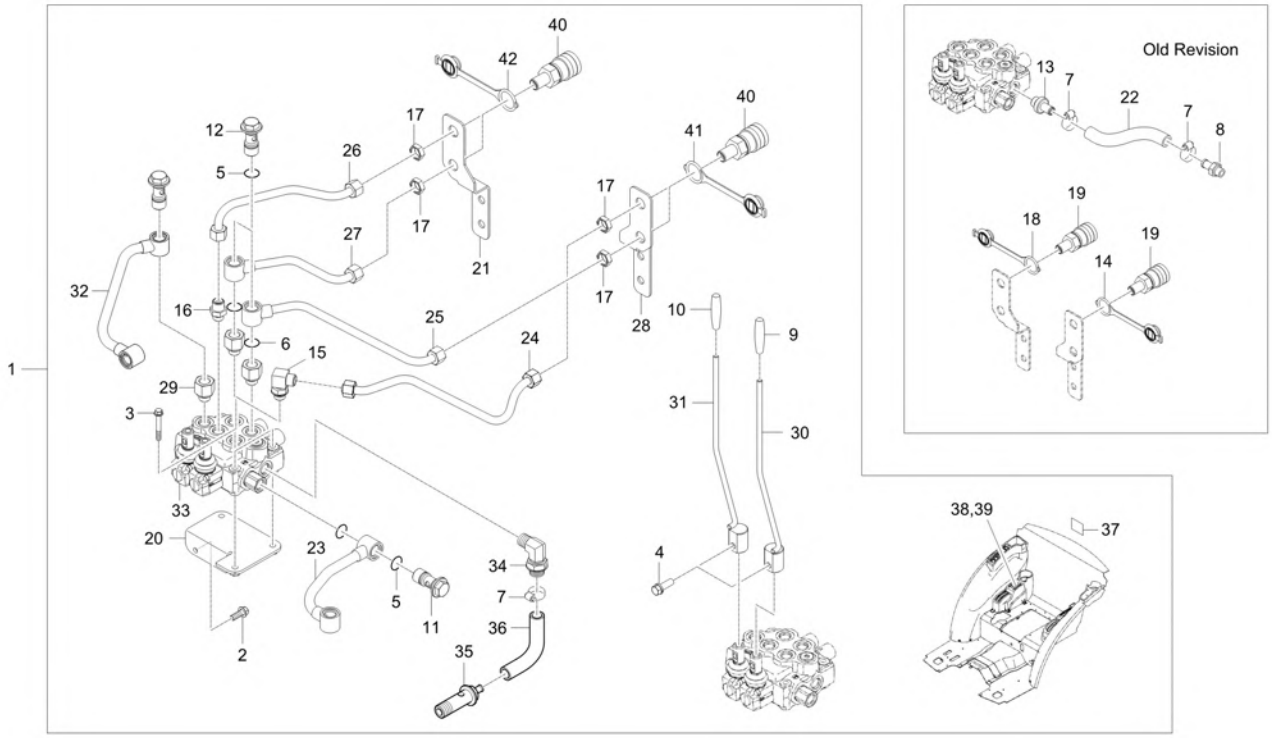

A : CK2610

No.	Part Number	Description	Qty A	Qty B	Qty C	Qty D	Qty E	I.C	Remark
6	04817-00200	O RING	6					<----->	DIA19.8
7	52200-2523-1	HOSBAND	2						
7	F6800-91851	BAND, HOSE	2					<----->	12-22mm
8	T2185-66151	ELBOW	1						
9	T2660-71221	GRIP GRAY dnr v	1						
10	T2660-71241	GRIP, DARK BLUE	1						
11	T4620-37092	JOINT BOLT v	1						
11	TC24-0238A	BOLT, JOINT	1					<----->	
12	T4620-37092	JOINT BOLT v	3						
12	TC24-0238A	BOLT, JOINT	3					<----->	
13	T4715-47071	CONNECTOR	1						
14	T4720-90081	DUST-CAP	2						
15	T4810-45761	ELBOW	1						
16	T4810-47131	CONNECTOR v	1						
17	T4930-47071	NUT	4						M18XP1.5
18	T5520-90071	CAP, SOCKET	2						1/2
19	T5710-30091	COUPLER,SELF-SEALING,AC,1-1-4 v	4						
20	T5810-48013	BRACKET, VALVE	1						

----> Old replace New <---- New replace Old <-X-> Not interchangeable
<---> Interchangeable <-O-> Interchangeable with another part(s)
* Please place an order assy(*)

https://tractormanualz.com/

TC2-G446008 DOUBLE ACTING VALVE GROUP

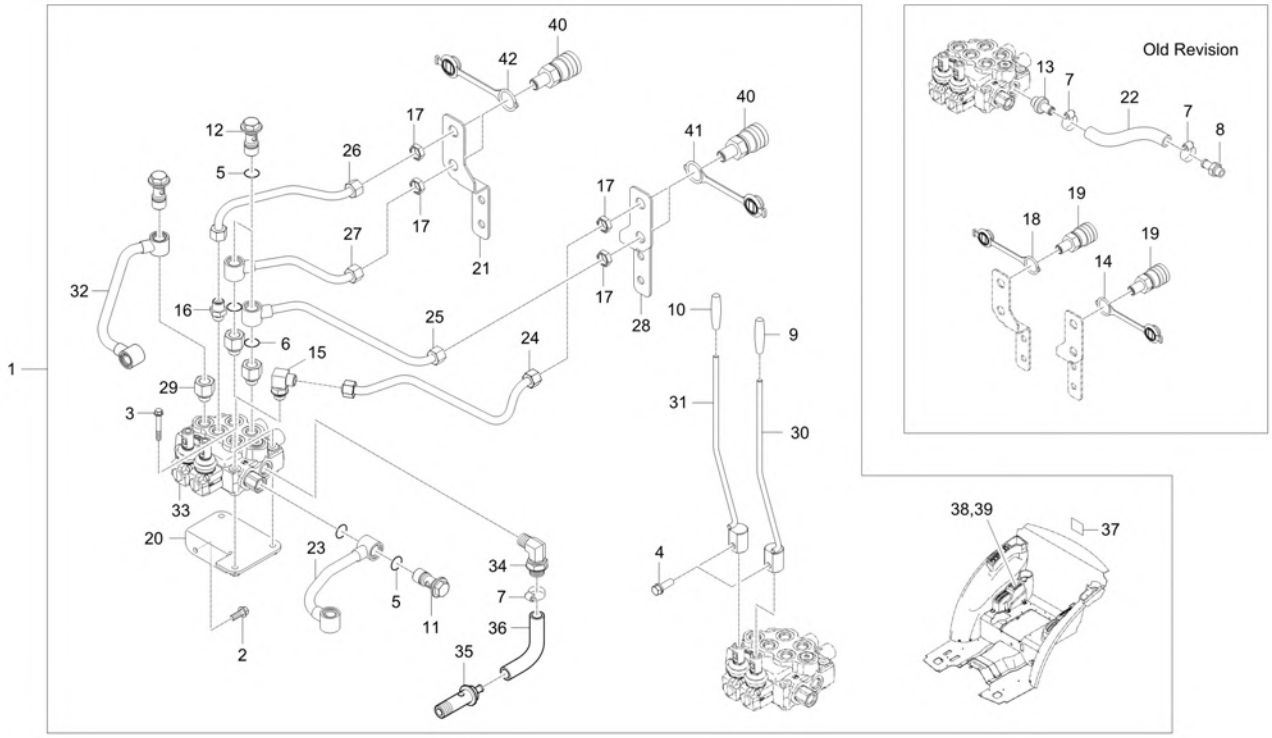

A : CK2610

No.	Part Number	Description	Qty A	Qty B	Qty C	Qty D	Qty E	I.C	Remark
21	T5810-48022	SUPPORT, SOCKET	1						
22	TC24-0078A	DRAIN HOSE	1						
23	T5810-48052	TUBE A HYD OUT CA	1						
23	T5810-48053	AUX HYD TUBE	1					<----->	
24	T5810-48062	AUX HYD TUBE	1						
25	T5810-48072	AUX HYD TUBE	1						
26	T5810-48082	AUX HYD TUBE	1						
27	T5810-48092	AUX HYD TUBE	1						
28	T5810-48121	SUPPORT, SOCKET	1						3.2T
29	T5855-47091	CONNECTION	3						
30	T5855-57012	LEVER, DOUBLE ACTING	1						-
31	T5855-57022	LEVER, DOUBLE ACTING	1						
32	T5857-48522	AUX HYD TUBE	1						
33	TC24-0020A	ASSY VALVE, DOUBLE ACTING - DS	1						
33	TC24-0217A	ASSY VALVE, DOUBLE ACTING-DS	1					<----->	
33	TC24-0020B	ASSY VALVE, DOUBLE ACTING-DS	1					<----->	
34	T4876-45162	ELBOW	1						
35	TC24-0075A	BOLT, JOINT-T v	1						

----> Old replace New
<---- New replace Old
<-X-> Not interchangeable
<---> Interchangeable
<-O-> Interchangeable with another part(s)
* Please place an order assy(*)

https://tractormanualz.com/

TC2-G446008

DOUBLE ACTING VALVE GROUP

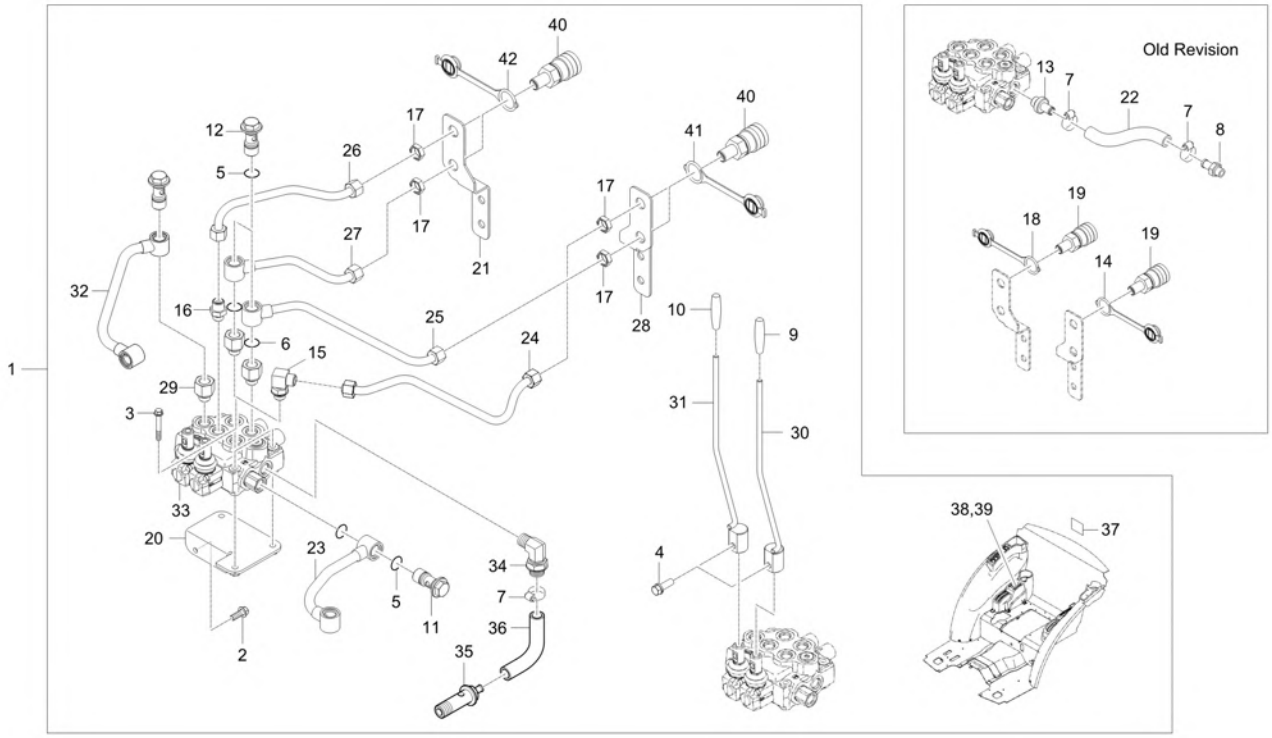

A : CK2610

No.	Part Number	Description	Qty A	Qty B	Qty C	Qty D	Qty E	I.C	Remark
36	TC24-0076A	HOSE, HYD-T v	1						
37	T2615-52131	LABEL COUPLER SOCKET	1						
38	TC26-1090A	LABEL, DOUBLE ACTING LEVER v	1						
39	TC26-1091A	LABEL, DOUBLE ACTING LEVER	1						
40	TD24-0159A	COUPLER, QUICK	4						
41	TF14-0122A	CAP, COUPLER SOCKET-1/2	2						1/2
42	TF14-0123A	CAP, COUPLER SOCKET-1/2	2						1/2

----> Old replace New
<----> Interchangeable
* Please place an order assy(*)
<---- New replace Old
<-O-> Interchangeable with another part(s)
<-X-> Not interchangeable

https://tractormanualz.com/

TC2-G6A2002

FRONT WEIGHT GROUP

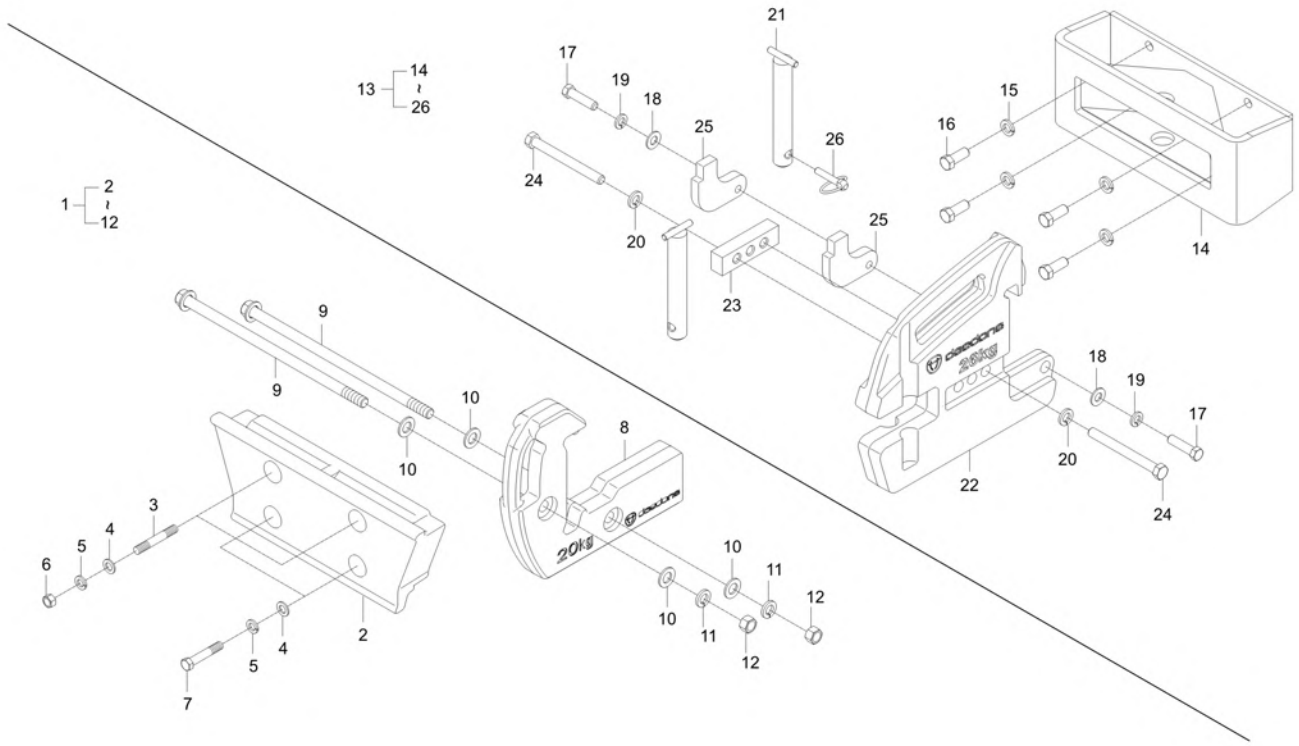

A : CK2610

No.	Part Number	Description	Qty A	Qty B	Qty C	Qty D	Qty E	I.C	Remark
1	T5710-A5022	WEIGHT KIT	1						
1	T5710-A5023	WEIGHT KIT	1					<------	
2	T5710-90021	SUPPORT, WEIGHT	1						N
3	01517-51475	STUD	2						
4	04011-50140	WASHER, PLAIN	4						M14
5	04512-50140	SPRING WASHER	4						M14
6	02176-50140	NUT	2						M14XP1.5
7	01173-51475	BOLT	2						M14*P1.5*75
8	T5710-90031	WEIGHT dnr v	8						N
8	T5710-90032	WEIGHT, FRONT END	8					<------	-
8	T5525-89452		1					<------	
9	T4875-85501	BOLT	2						
10	04014-50180	WASHER, PLAIN	4						M18
11	04512-50180	WASHER, SPRING	2						M18
12	02176-50180	NUT	2						M18XP1.5
13	T5710-A5031	WEIGHT KIT	1						
13	T5710-A5032	WEIGHT KIT	1					<------	
14	T5525-89411	BRACKET, FRONT-WEIGHT dnr v	1						

----> Old replace New
<---- New replace Old
<-X-> Not interchangeable
<---> Interchangeable
<-O-> Interchangeable with another part(s)
* Please place an order assy(*)

https://tractormanualz.com/

TC2-G6A2002

FRONT WEIGHT GROUP

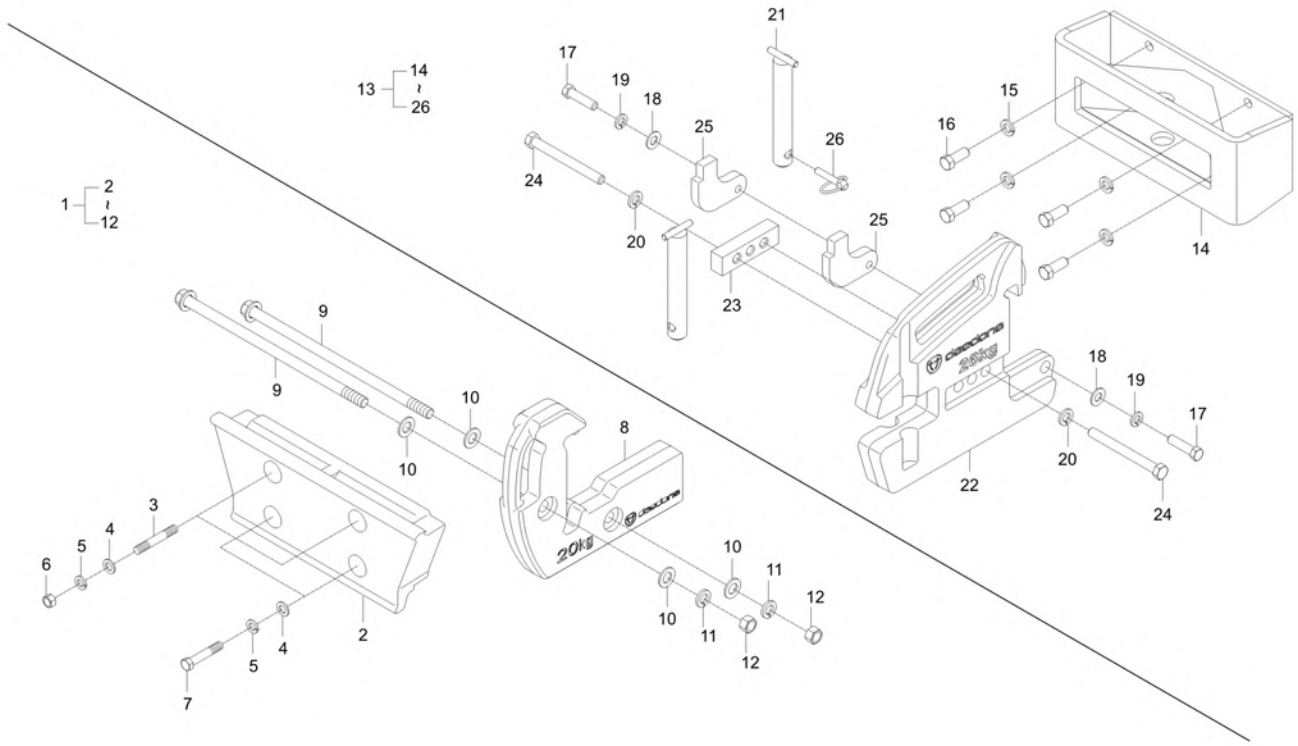

A : CK2610

No.	Part Number	Description	Qty A	Qty B	Qty C	Qty D	Qty E	I.C	Remark
15	04512-50140	SPRING WASHER	4						M14
16	01173-51435	BOLT v	4						M14XP1.5
17	01173-51455	BOLT	2						M14P1.5*55
18	04013-50140	PLAIN WAHSER	2						M14
19	04512-50140	SPRING WASHER	2						M14
20	04512-50160	WASHER, SPRING	2						M16
21	T5525-89421	PIN	2						
22	T5525-89451	WEIGHT, FR RR dnr v	6						
22	T5525-89452		6					<------	
23	T5525-89461	MOUNTING PLATE v	1						T25.0
24	T5525-89471	BOLT, FRONT WIGHT	2						M16XP1.5XL 150
25	T5525-89481	BRACKET	2						T16
26	34150-37644	PIN, SET v	1						

----> Old replace New
<---- New replace Old
<-X-> Not interchangeable
<---> Interchangeable
<-O-> Interchangeable with another part(s)
* Please place an order assy(*)

https://tractormanualz.com/

TC2-G6F2001

TOOL BOX GROUP

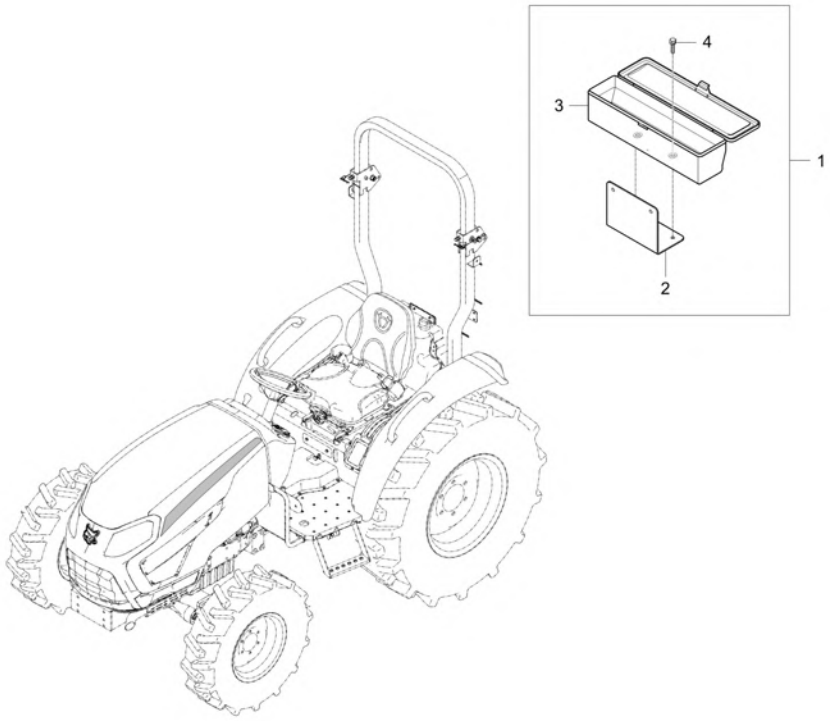

A : CK2610

No.	Part Number	Description	Qty A	Qty B	Qty C	Qty D	Qty E	I.C	Remark
1	T5855-A5101	BOX,TOOL	1						
2	T5855-95011	BRACKET,TOOL BOX	1						
3	T4930-70493	BOX, TOOL	1						-
4	01754-50816	BOLT, FLANGE	4						M8XP1.25

----> Old replace New
<----> Interchangeable
* Please place an order assy(*)
<---- New replace Old
<-O-> Interchangeable with another part(s)
<-X-> Not interchangeable

https://tractormanualz.com/

TC2-G637506

SUNSHADE GROUP

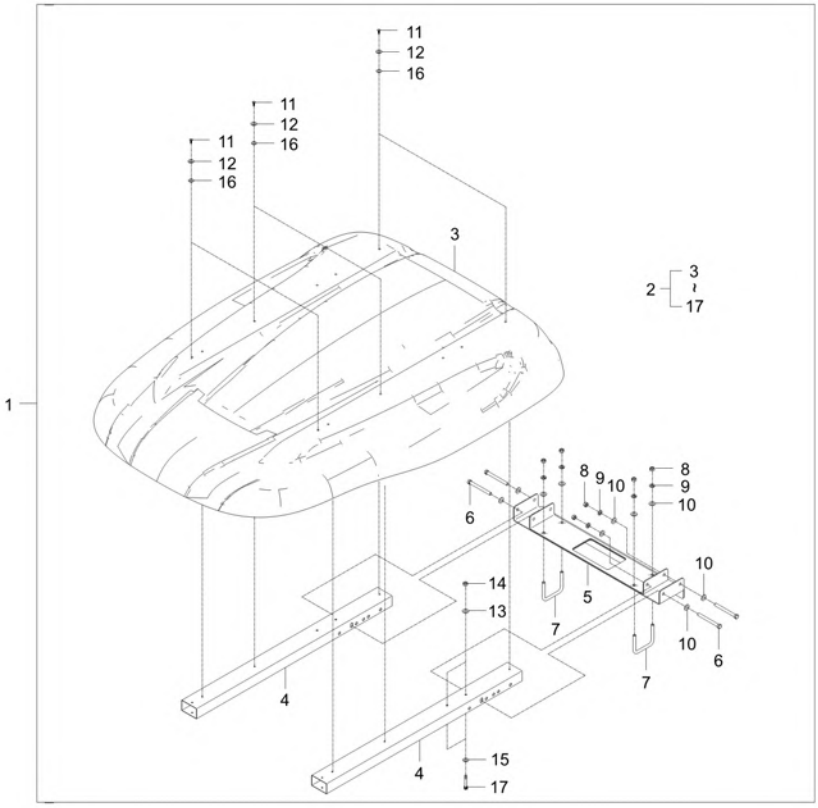

A : CK2610

No.	Part Number	Description	Qty A	Qty B	Qty C	Qty D	Qty E	I.C	Remark
1	T5710-A5083	SUN VISOR KIT ASSY	1						
2	T5710-59603	ASSY SUNSHADE dnr v	1						
3	T5710-59612	SUNSHADE	1						T5.0
4	T5710-59622	PIPE	2						75x45xT1.6
5	T5710-59633	ASSY, SUPPORT	1						
6	T2185-85101004	BOLT dnr v	4						M10XP1.5
7	T2185-85101005	U BOLT v	2						M10XP1.5
8	02014-50100	NUT	8						M10XP1.5
9	04013-50100	PLAIN WASHER	12						M10
10	04512-50100	SPRING WASHER	8						M10
11	38240-1883-1	TAPPING SCREW dnr v	8						M4X16
12	04015-50050	WASHER, PLAIN	8						M5
13	04015-50060	WASHER, PLAIN	4						M6
14	02751-50060	NUT, FLANGE	4						M6XP1.0
15	04013-50060	PLAIN WASHER	4						M6
16	T4682-65301	WASHER 2	12						
17	01023-50665	BOLT, WASHER	4						MEX10*76

----> Old replace New
<----> Interchangeable
* Please place an order assy(*)
<---- New replace Old
<-O-> Interchangeable with another part(s)
<-X-> Not interchangeable

https://tractormanualz.com/

TC2-G643403

MID PTO LEVER GROUP

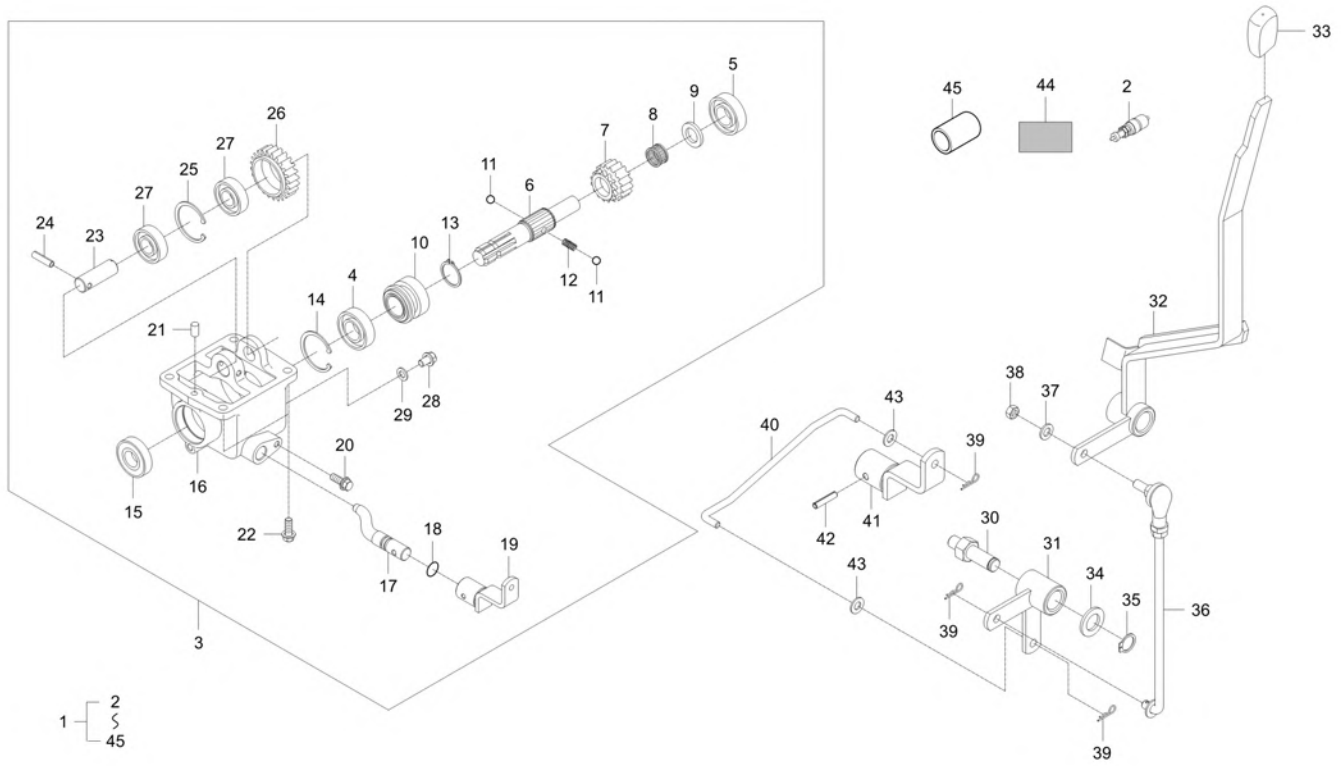

A : CK2610

No.	Part Number	Description	Qty A	Qty B	Qty C	Qty D	Qty E	I.C	Remark
1	T5855-A5004	KIT, MID PTO	1						
1	T5855-A5005	KIT, MID PTO	1					<------	
1	T5855-A5006	KIT, MID PTO	1					<----->	
2	T4930-69881	SWITCH, SAFETY STARTER	1						
3	T5815-24102	MID PTO KIT	1						
3	T5815-24103	MID PTO KIT	2					<----->	
4	08101-06205	BEARING BALL dnr v	1						DIA25
5	08101-06304	BALL BEARING	1						#6304
6	T5815-24121	SHAFT, MID PTO	1						
7	T5815-24161	GEAR 17	1						
8	08822-53017	NEEDLE BEARING	1						내경DIA25
9	31365-2278-1	COLLAR	1						
10	T5815-24142	SHIFTER	1						
11	07715-01605	BALL,STEEL	2						DIA7.9375
12	T2440-44251	SPRING	1						DIA1.4
13	38430-2554-1	RING, SNAP	1						
14	04611-00520	SNAP RING	1						DIA52
15	09502-55210	SEAL OIL v	1						DIA25

----> Old replace New <---- New replace Old <-X-> Not interchangeable
<---> Interchangeable <-O-> Interchangeable with another part(s)
* Please place an order assy(*)

https://tractormanualz.com/

TC2-G643403

MID PTO LEVER GROUP

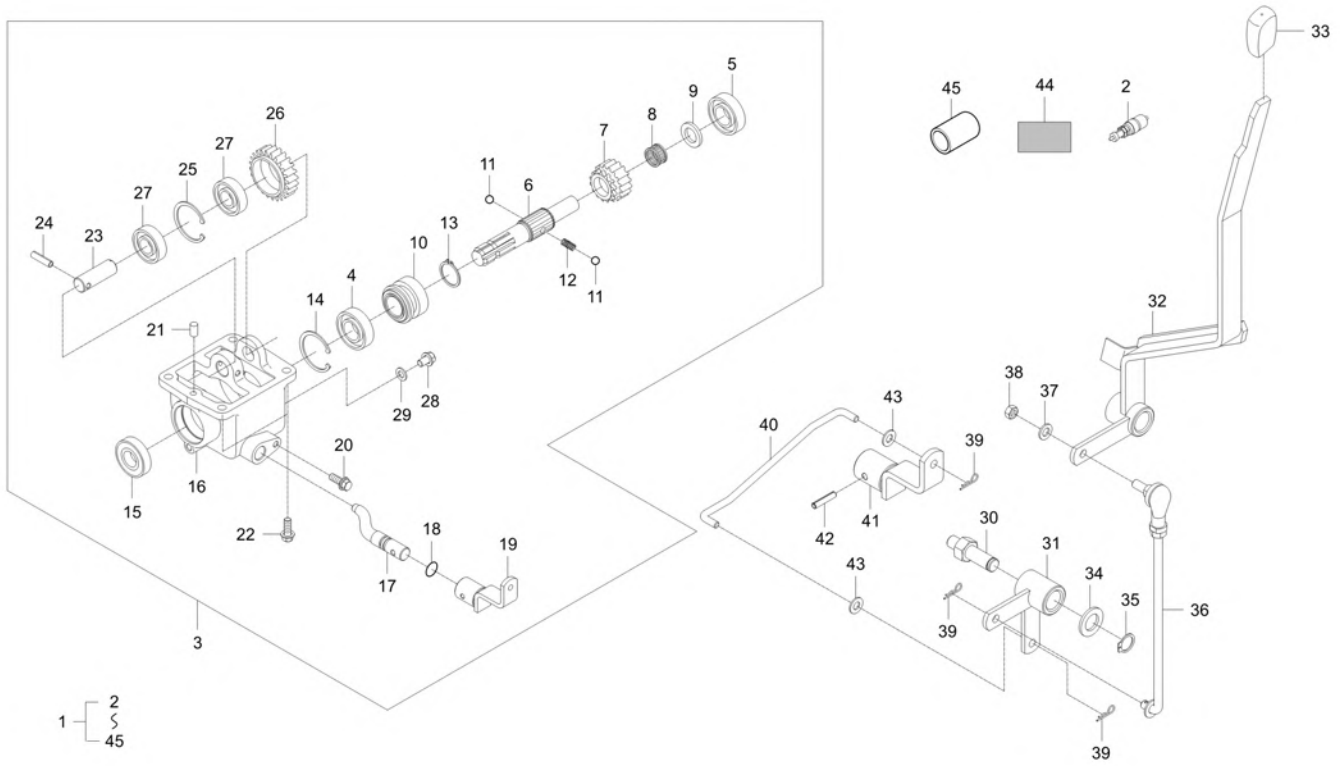

A : CK2610

No.	Part Number	Description	Qty A	Qty B	Qty C	Qty D	Qty E	I.C	Remark
16	T5815-24114	CASE, MID PTO	1						
17	T5815-24232	ARM, SHIFT MID PTO	1						
18	04811-00140	O RING	1						
19	T2555-23331	STOPPER	1						
20	01754-50812	BOLT, FLANGE	1						M8XP1.25
21	05012-00818	PIN, PARALLEL	2						DIA8XL18
22	01133-51030	WITH WASHER BOLT	4						M10XP1.25
23	T5815-24131	SHAFT, COUNTER MID PTO	1						
24	05411-00645	PIN,SPRING	1						
25	04611-00470	RING,SNAP	1						DIA47
26	T5815-24151	GEAR 24	1						
27	08101-06204	BALL BEARING	2						DIA20
27	U3210-06204	BALL BEARING	2					<----->	6204
28	06331-35010	PLUG	1						M10XP1.25
29	04717-01000	WASHER, SEAL	1						M10
30	T5855-58411	SHAFT, PTO	1						HEX27
31	T5855-58461	ARM2, PTO	1						
32	T5855-58422	LEVER, PTO	1						

----> Old replace New <---- New replace Old <-X-> Not interchangeable
<---> Interchangeable <-O-> Interchangeable with another part(s)
* Please place an order assy(*)

https://tractormanualz.com/

TC2-G643403

MID PTO LEVER GROUP

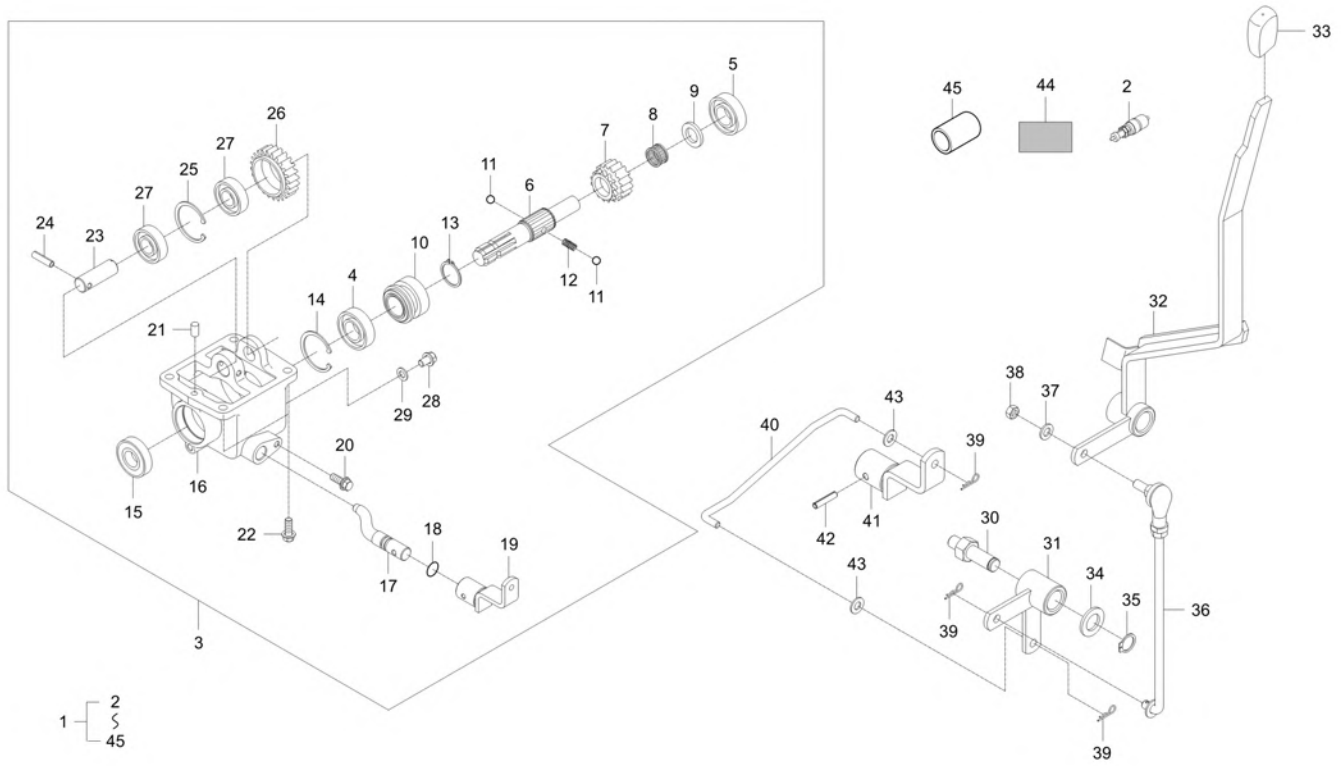

A : CK2610

No.	Part Number	Description	Qty A	Qty B	Qty C	Qty D	Qty E	I.C	Remark
33	T2350-25871	GRIP A	1						
34	04011-50180	PLAIN WASHER	1						M18
35	04612-00180	SNAP RING	1						DIA18
36	T5855-58433	ROD, MID PTO	1						
37	04512-50080	SPRING WASHER	1						M08
38	02156-50080	NUT v	1						M8XP1.25
39	05525-50800	PIN, SNAP	5						DIA8
40	T5855-58441	ROD 2, MID PTO	1						DIA 8
41	T5855-58451	ARM, MID PTO	1						
42	05411-00630	PIN, SPRING	1						DIA6.4XL30
43	04014-50080	WASHER, PLAIN	5						
44	T2350-53192	LABEL	1						
45	T2555-60991	COVER, MID PTO	1						

----> Old replace New <---- New replace Old <-X-> Not interchangeable
<---> Interchangeable <-O-> Interchangeable with another part(s)
* Please place an order assy(*)

https://tractormanualz.com/

TC2-G6A3001

REAR WEIGHT GROUP

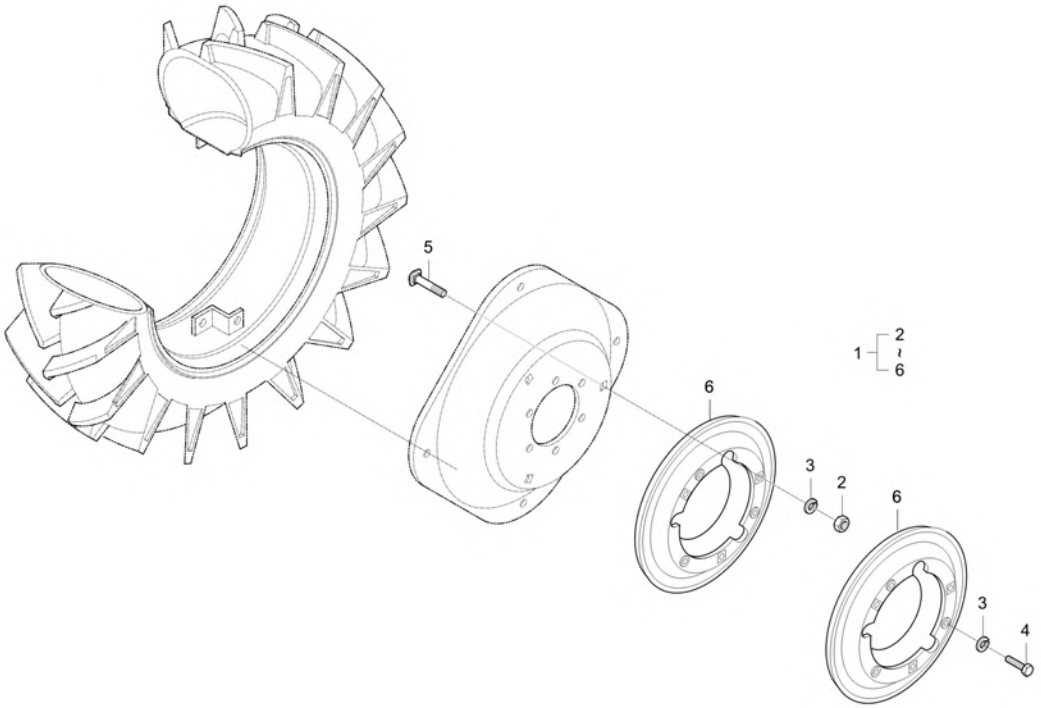

A : CK2610

No.	Part Number	Description	Qty A	Qty B	Qty C	Qty D	Qty E	I.C	Remark
1	T5710-A03000601	WEIGHT ASSY dnr v	1						
1	T5710-A03000602	ASSY WEIGHT-RR	1					<------	
2	02076-50160	NUT	12						
3	04512-50160	WASHER, SPRING	12						M16
4	99415-1502-2	BOLT	6						
5	99415-1503-1	BOLT, WEIGHT	6						
6	T4240-27743	WEIGHT	4						
6	T4240-27744	WEIGHT, WHEEL	4					<------	

----> Old replace New
<----> Interchangeable
* Please place an order assy(*)
<---- New replace Old
<-O-> Interchangeable with another part(s)
<-X-> Not interchangeable

https://tractormanualz.com/

TB110C-T2100A

CABIN GROUP

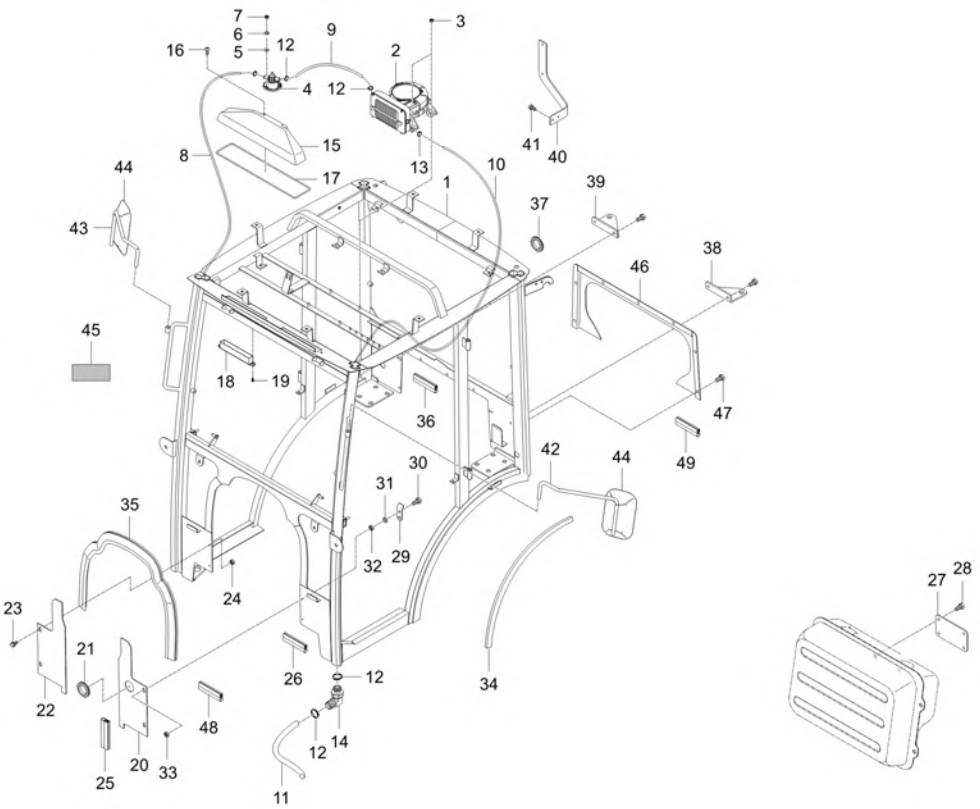

A : CK2610

No.	Part Number	Description	Qty A	Qty B	Qty C	Qty D	Qty E	I.C	Remark
1	T4665-80023	ASSY,CABIN FRAME	1						
1	T4665-80024	ASSY,CABIN FRAME	1					<--X-->	
1	T4665-80025	ASSY,CABIN FRAME	1					<------	
2	T2131-86401	ASSY HEATER	1						
3	02751-50080	FLANGE NUT 8MMX1.25P	4						M8XP1.25
4	T2131-86502	CONTROLLER, HEATER	1						
5	04013-50040	WASHER PLAIN	3						M4
6	04512-50040	WASHER, SPRING	3						M04
7	02054-50040	NUT	3						M4XP0.7
8	T2391-87021	HOSE A HEATER	1						
9	T2391-87031	HEATER HOSE B	1						
10	T2391-87041	HOSE C HEATER	1						
11	T2391-87051	HEATER HOSE D (CK20)	2						D18 * d11
12	T4340-38241	BAND HOSE	6						스덴27#
13	T4340-38241	BAND HOSE	4						스덴27#
14	T2391-87061	HOSE HEATER AIR BREATHER	2						D15XD13 엘보우
15	T2131-82211	DUCT	1						
16	84612-1823-0	SCREW	2						M6X16

----> Old replace New
<---> Interchangeable
* Please place an order assy(*)
<---- New replace Old
<-O-> Interchangeable with another part(s)
<-X-> Not interchangeable

https://tractormanualz.com/

TB110C-T2100A

CABIN GROUP

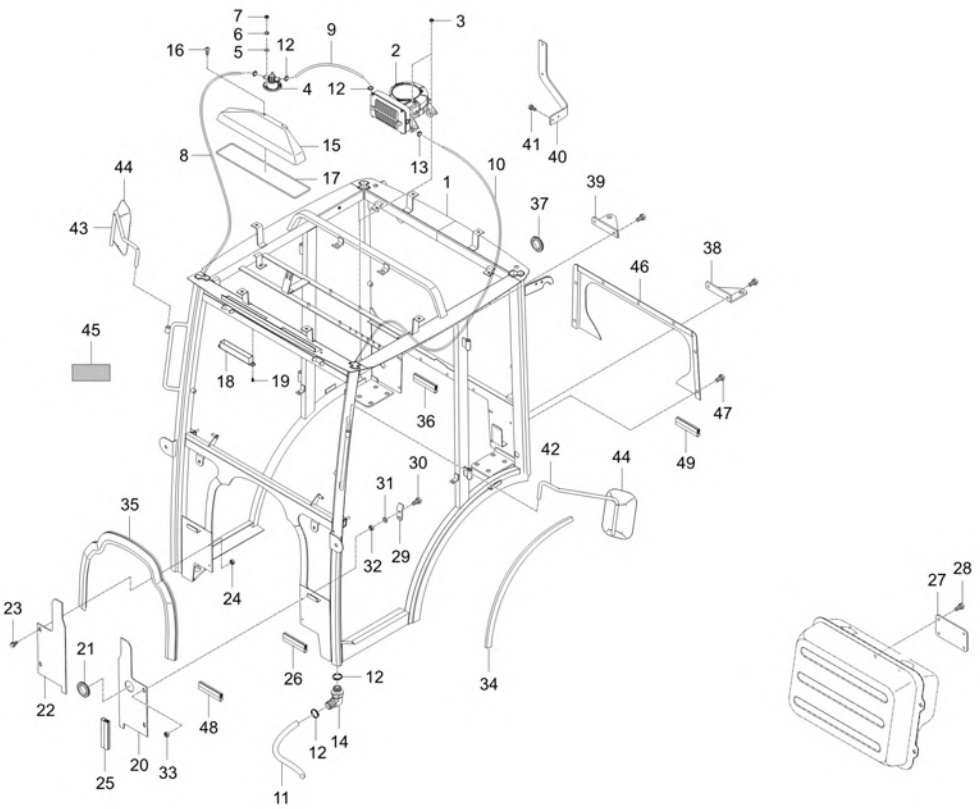

A : CK2610

No.	Part Number	Description	Qty A	Qty B	Qty C	Qty D	Qty E	I.C	Remark
17	T2131-82221	RUBBER DUCT SEALING	1						
18	T4145-82052	FILTER COVER ASSY	2						
18	TG16-0379A	FILTER,EXTERNAL AIR	2					<------	
18	TG36-1251A	FILTER, EXTERNAL AIR-DONALDSON	2					<------	
19	T4625-55441	BOLT FLANGE	4						
20	T4665-85131	PLATE, FR LWR BLOCKING LH	1						
21	T2391-85191	GROMMET	1						D28
22	T4665-85141	PLATE, FR LWR BLOCKING RH	1						
23	01754-50620	BOLT, FLANGE	3						M6XP1.0
24	02751-50060	NUT, FLANGE	3						M6XP1.0
25	T2131-85411	RUBBER 1 FR LWR SEALING	2						I형 2번 300L * 2
26	T2131-85421	RUBBER 2 FR LWR SEALING	2						170L * 2EA
27	T2391-86211	PLATE SMV BRACKET TAG	1						
28	01754-50820	BOLT, FLANGE	2						M8XP1.25
29	T4665-86221	STOPPER, CLUTCH	1						
30	01023-50630	BOLT WASHER	1						
31	04013-50060	PLAIN WASHER	2						M6
32	T2391-85171	NYLON NUT(M6)	1						

----> Old replace New <---- New replace Old <-X-> Not interchangeable
<---> Interchangeable <-O-> Interchangeable with another part(s)
* Please place an order assy(*)

https://tractormanualz.com/

TB110C-T2100A

CABIN GROUP

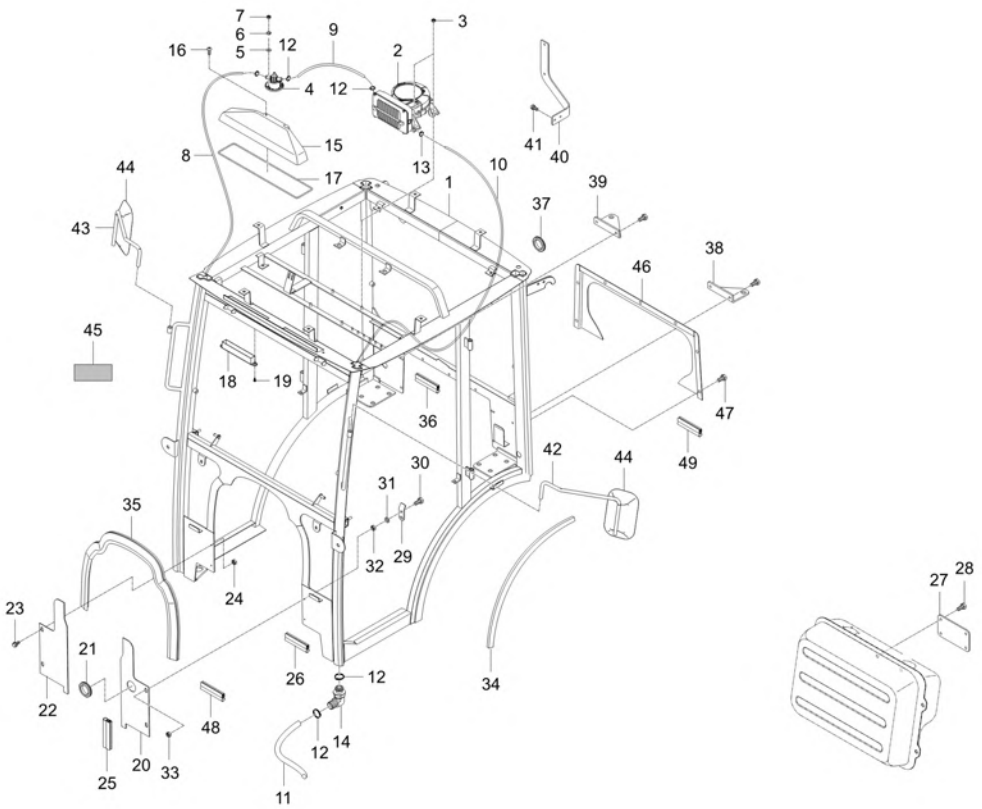

A : CK2610

No.	Part Number	Description	Qty A	Qty B	Qty C	Qty D	Qty E	I.C	Remark
33	02056-50060	NUT	1						M6XP1.0
34	T2391-86231	PAD SEALING 1 FENDER dnr v	2						
34	T2391-86232	PAD SEALING 1 FENDER	2					<------	
35	T2391-86251	PAD SEALING FRONT BLOCKING PLATE dnr v	1						
35	T2391-86252	SEALING PAD, FRONT BLOCKING PLATE v	1					<------	
36	T4665-86261	SEALING PAD, REAR BLOCKING PLATE	1						
37	T2395-84411	GROMMET	1						N
38	T2395-68111	BRACKET TURN SIGNAL LAMP RR LH (USA)	1						
38	TB16-0070A	BRACKET, DIRECTION LAMP-LH RR	1					<--X-->	T4.5
39	T2395-68121	BRACKET, TURN SIGNAL LAMP RR RH (USA)	1						
39	TB16-0071A	BRACKET, DIRECTION LAMP-RH RR	1					<--X-->	T4.5
40	T2391-86281	BRACKET SMV	1						
41	01123-50820	BOLT, WASHER v	2						M8XP1.25
42	T2131-83511	SUPPORT REARVIEW MIRROR LH v	1						
43	T2131-83521	SUPPORT REARVIEW MIRROR RH v	1						
44	T4818-83001	MIRROR REARVIEW v	2						
45	T4665-52451	LABEL, CERTIFICATION CABIN	1						
45	T4665-52452	LABEL, CERTIFICATE CABIN	1					<------	T0.5

----> Old replace New
<---- New replace Old
<-X-> Not interchangeable
<---> Interchangeable
<-O-> Interchangeable with another part(s)
* Please place an order assy(*)

https://tractormanualz.com/

TB110C-T2100A

CABIN GROUP

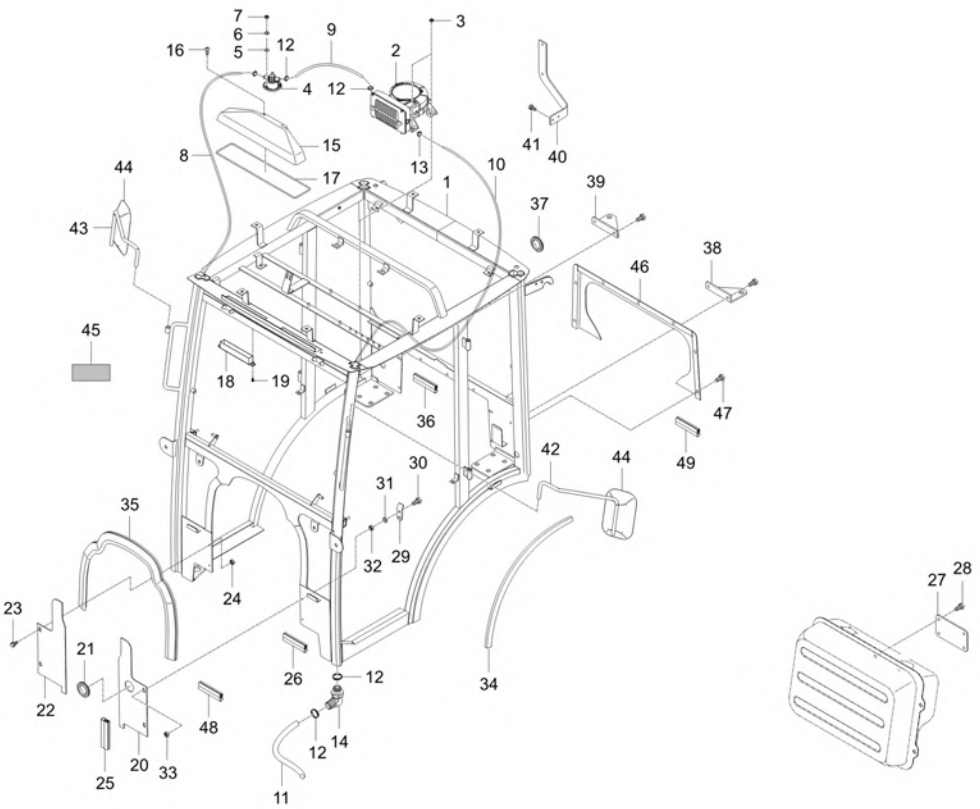

A : CK2610

No.	Part Number	Description	Qty A	Qty B	Qty C	Qty D	Qty E	I.C	Remark
46	T4665-86572	INTERCEPTION PLATE, RR	1						
47	T4625-55441	BOLT FLANGE	7						
48	T4668-85451	RUBBER3, FR LWR SEALING	3						I형 2번 100L
49	T4668-85461	SEALING PAD, REAR BLOCKING PLATE	1						
50	T4686-87611	PLUG	2						

----> Old replace New
<----> Interchangeable
* Please place an order assy(*)
<---- New replace Old
<-O-> Interchangeable with another part(s)
<-X-> Not interchangeable

https://tractormanualz.com/

CK20HC-T2150A

ROOF GROUP

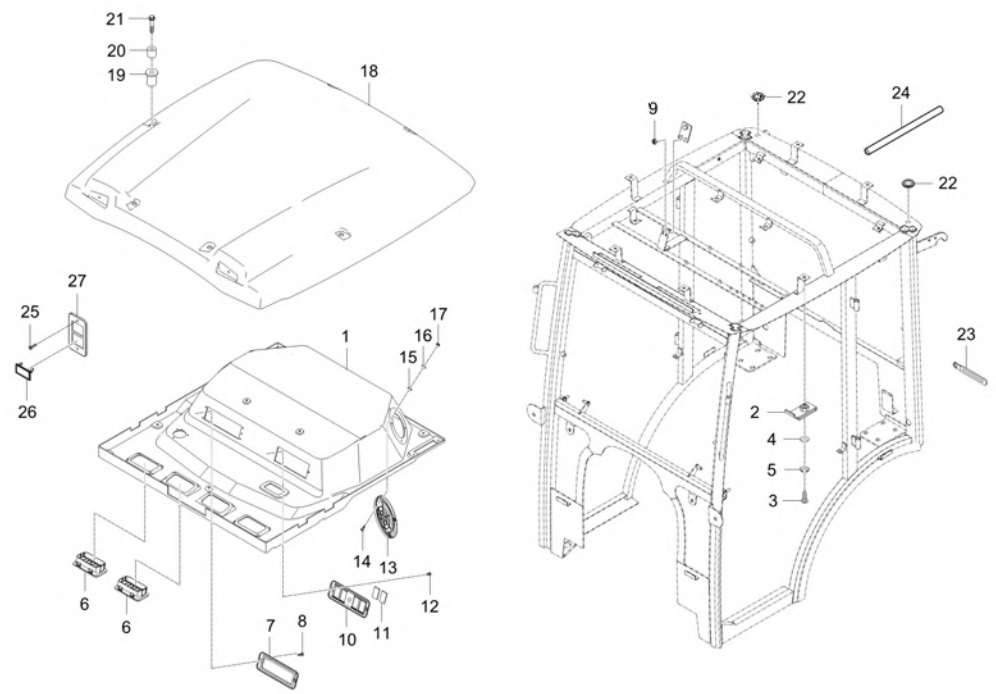

A : CK2610

No.	Part Number	Description	Qty A	Qty B	Qty C	Qty D	Qty E	I.C	Remark
1	T2391-82014	CEILING ASSY	1						
1	T2391-82015	CEILING ASSY	1					<----->	
1	T2391-82016	CEILING ASSY	1					<------	
2	38245-2925-3	NUT, SPRING	1						
3	03014-50630	SCREW v	1						M6*P1.0
4	04013-50060	PLAIN WASHER	1						M6
5	T4145-82081	CAP RUBBER	1						
6	T4930-83082	GRILL AIR CONDITIONER	1						
7	T4145-82072	COVER STEREO	1						
8	03054-50416	SCREW	1						M4*0.7
9	02751-50060	NUT, FLANGE	1						M6XP1.0
10	T2131-82511	PANNEL SWITCH	1						
11	T2131-82521	COVER	1						
12	03054-50416	SCREW	1						M4*0.7
13	T4810-82352	GRILL SPEAKER	1						
14	03054-50420	OB SCREW	1						
15	04013-50040	WASHER PLAIN	1						M4
16	04512-50040	WASHER, SPRING	1						M04

----> Old replace New
<----> Interchangeable
* Please place an order assy(*)
<---- New replace Old
<-O-> Interchangeable with another part(s)
<-X-> Not interchangeable

https://tractormanualz.com/

CK20HC-T2150A

ROOF GROUP

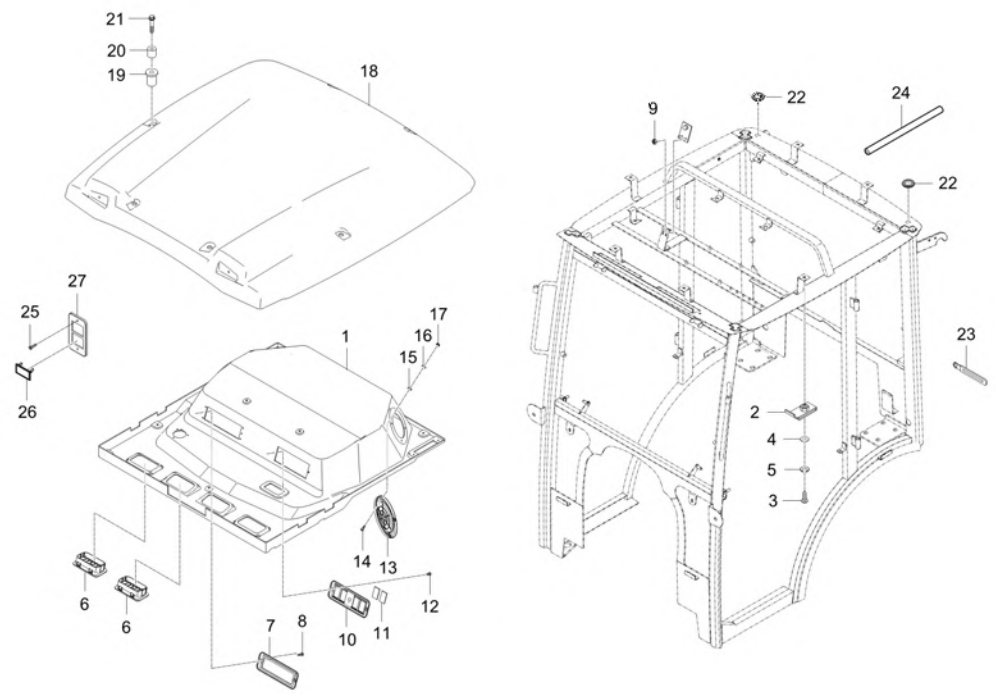

A : CK2610

No.	Part Number	Description	Qty A	Qty B	Qty C	Qty D	Qty E	I.C	Remark
17	02054-50040	NUT	1						M4XP0.7
18	T2391-82001	TRK - ROOF	1						
19	T4833-87141	WASHER PACKING v	1						
20	T4681-83431	COLLAR	1						
21	01754-50830	BOLT FLANGE	1						M8XP1.25
22	T4815-78112	GROMMET v	1						
23	37150-3447-1	WIR'G CLAMP	1						T0.5
24	T2391-89131	HOSE WIPER -KTT	1						
25	03054-50416	SCREW	2						M4*0.7
26	T4025-68301	COVER	2						
27	TC26-0383A	SWITCH - PANEL 2	1						

----> Old replace New
<---- New replace Old
<-X-> Not interchangeable
<---> Interchangeable
<-O-> Interchangeable with another part(s)
* Please place an order assy(*)

https://tractormanualz.com/

CK30C-T2180A

LAMP GROUP(OPTION)

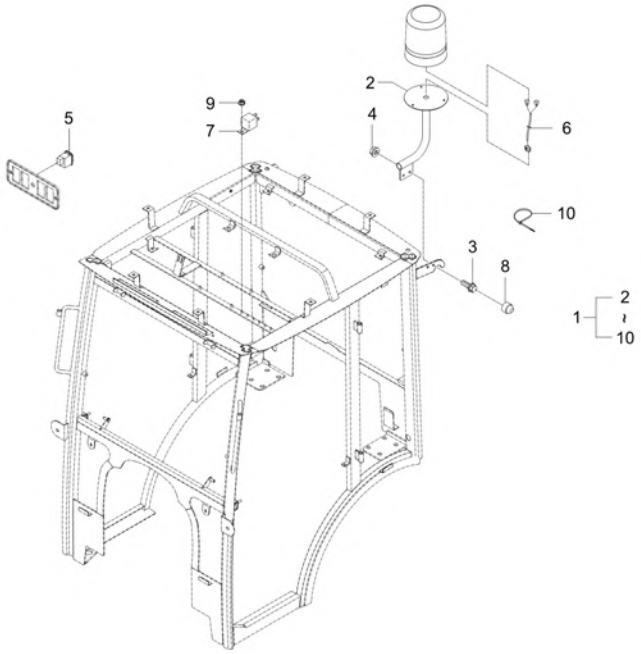

A : CK2610

No.	Part Number	Description	Qty A	Qty B	Qty C	Qty D	Qty E	I.C	Remark
1	T2131-88202	KIT, LAMP	1						
2	T4688-69312	BRACKET BEACON LIGHT	1						
3	01754-50820	BOLT, FLANGE	2						M8XP1.25
4	02751-50080	FLANGE NUT 8MMX1.25P	2						M8XP1.25
5	T4520-54222	SWITCH WORKING LAMP	1						
6	T4688-69321	WIRE 2, LAMP CONNECTION HARNESS v	1						
7	T5535-69961	RELAY,5P	1						Bracket
8	T4680-93211	NUT CAP M6	3						
9	02751-50060	NUT, FLANGE	1						M6XP1.0
10	T4520-82551	BAND, CORD v	3						L270

----> Old replace New
<---- New replace Old
<-X-> Not interchangeable
<---> Interchangeable
<-O-> Interchangeable with another part(s)
* Please place an order assy(*)

https://tractormanualz.com/

CK30C-T2190A

WORKING LAMP GROUP(OPTION)

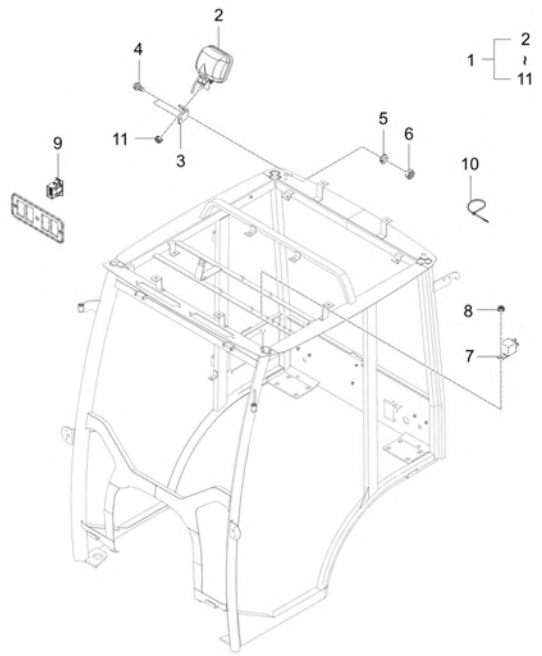

A : CK2610

No.	Part Number	Description	Qty A	Qty B	Qty C	Qty D	Qty E	I.C	Remark
1	T2131-88303	KIT, WORKING LAMP	1						
2	T2131-69811	ASSY LAMJP,WORKING	1						
3	T2131-89111	BRACKET REAR WORKING LAMP	1						
4	01754-50820	BOLT, FLANGE	2						M8XP1.25
5	04512-50080	SPRING WASHER	2						M08
6	02114-50080	NUT v	2						M8*P1.25
7	T5535-69961	RELAY,5P	1						Bracket
8	02751-50060	NUT, FLANGE	1						M6XP1.0
9	T4520-54222	SWITCH WORKING LAMP	1						
10	T4520-82551	BAND, CORD v	3						L270
11	02751-50080	FLANGE NUT 8MMX1.25P	1						M8XP1.25

----> Old replace New <---- New replace Old <-X-> Not interchangeable
<---> Interchangeable <-O-> Interchangeable with another part(s)
* Please place an order assy(*)

https://tractormanualz.com/

CK30C-T2200A

CD PLAYER GROUP(OPTION)

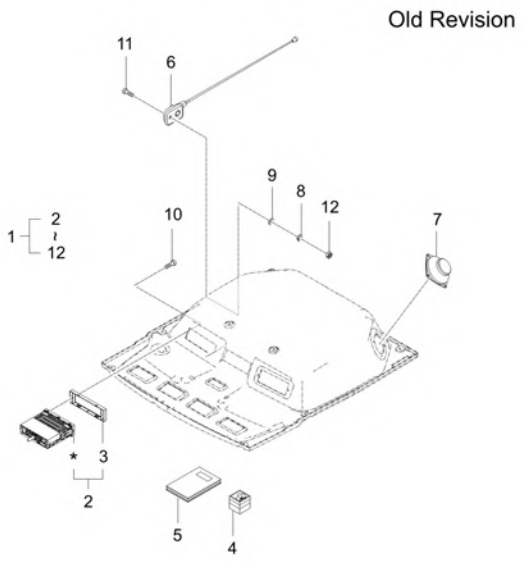

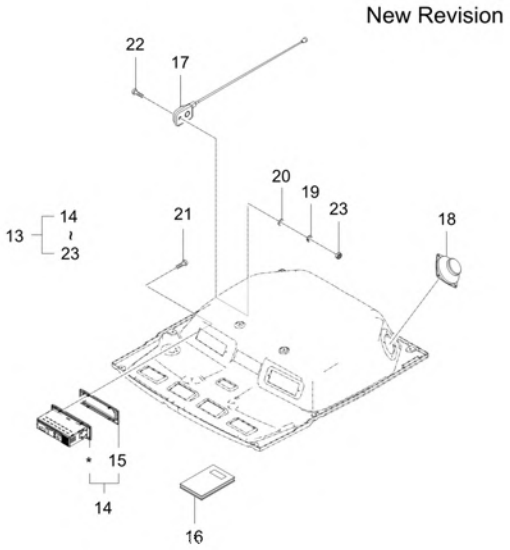

A : CK2610

No.	Part Number	Description	Qty A	Qty B	Qty C	Qty D	Qty E	I.C	Remark
1	T2131-55452	KIT, STEREO	1						
2	TG15-0046A	ASSY STEREO v	1						
3	T5270-54501	COVER obs v	1						
3	TG15-0048A	BEZEL	1					<--X-->	
4	T5270-55172	STEREO ACCESSORIES	1						
5	TG15-0047A	MANUAL, STEREO	1						
6	T4810-82421	ASSY ANTENNA	1						
7	T4810-82341	ASSY SPEAKER	2						
8	04512-50060	WASHER, SPRING	1						M06
9	04013-50060	PLAIN WASHER	1						M6
10	03024-50420	SCREW WASHER v	2						
11	03014-50625	SCREW v	1						
12	02114-50060	NUT dnr v	1						
13	TB35-A0005A	BLUETOOTH PLAYER OPTION KIT ASSY	1						
14	T5290-69942	ASSY, STEREO v	1						
15	TF15-0001A	BEZEL	1						
16	TF15-0002C	MANUAL, STEREO	1						
17	T4810-82421	ASSY ANTENNA	1						

----> Old replace New
<----> Interchangeable
* Please place an order assy(*)
<---- New replace Old
<-O-> Interchangeable with another part(s)
<-X-> Not interchangeable

https://tractormanualz.com/

CK30C-T2200A

CD PLAYER GROUP(OPTION)

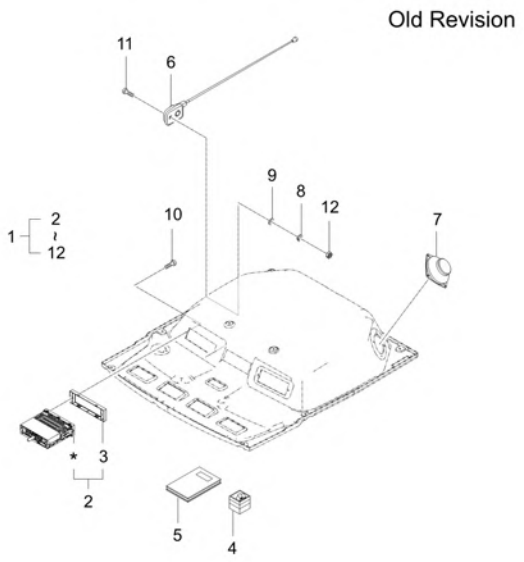

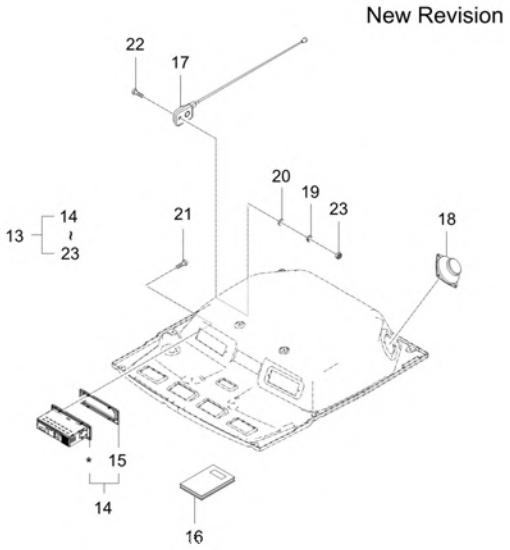

A : CK2610

No.	Part Number	Description	Qty A	Qty B	Qty C	Qty D	Qty E	I.C	Remark
18	T4810-82341	ASSY SPEAKER	2						
19	04512-50060	WASHER, SPRING	1						M06
20	04013-50060	PLAIN WASHER	1						M6
21	03024-50420	SCREW WASHER v	2						
22	03014-50625	SCREW v	1						
23	02056-50060	NUT	1						M6XP1.0

----> Old replace New
<----> Interchangeable
* Please place an order assy(*)
<---- New replace Old
<-O-> Interchangeable with another part(s)
<-X-> Not interchangeable

https://tractormanualz.com/

TB1100C-T2210A

Interior material group(option)

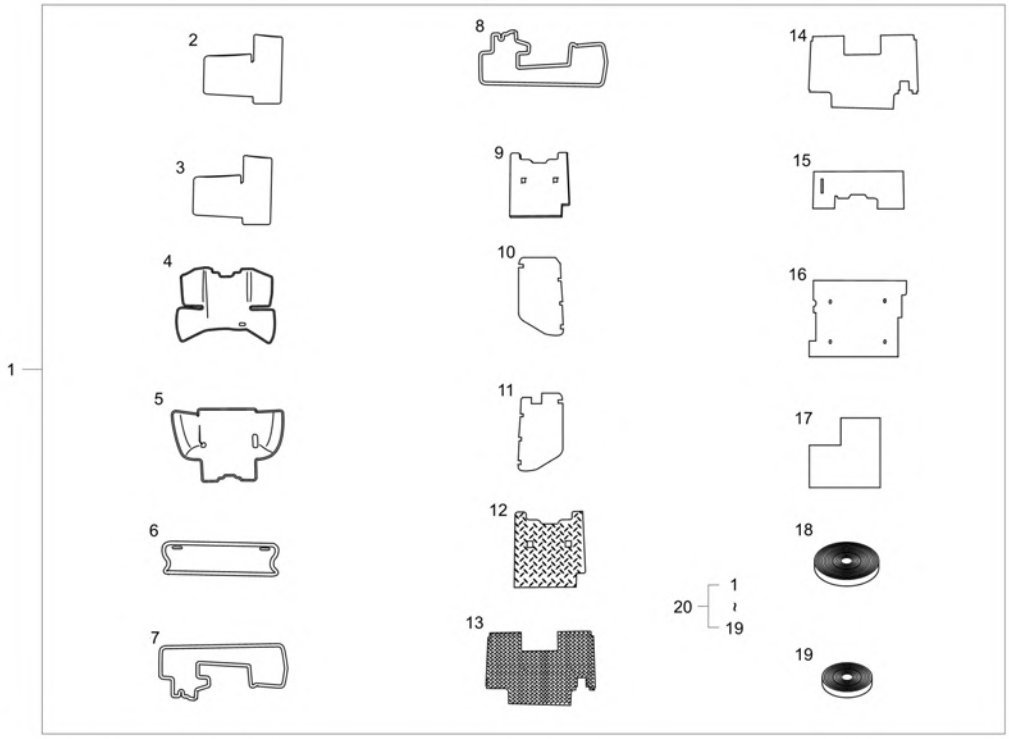

A : CK2610

No.	Part Number	Description	Qty A	Qty B	Qty C	Qty D	Qty E	I.C	Remark
1	T4675-80112	KIT, INTERIOR TRIM	1						
1	T4675-80113	KIT, INTERIOR TRIM	1					<------	
1	T4675-80114	KIT, INTERIOR TRIM	1					<----->	
2	T2391-98151	PAD SOUND INSULATION FENDER RR LH	1						
3	T2391-98161	PAD SOUND INSULATION FENDER RR RH	1						
4	T2395-94111	REZA COVER	1						
5	T2391-96191	COVER REZA FLOOR SEAT - MECHANICAL	1						
5	TB16-0090A	COVER, LEATHER(SEAT/MECH)	1					<----->	
6	T2391-98131	COVER	1						
7	T2391-98111	COVER REZA	1						
8	T2391-98121	COVER REZA	1						
9	T2391-94152	SOUND ABSORPTION PAD INSTRUMENT	1						
10	T2391-94131	PAD SOUND INSULATION INSTRUMENT LH	1						
11	T2391-94141	PAD SOUND INSULATION INSTRUMENT RH	1						
12	T2391-94122	SOUND INSULATION PAD (INSTRUMENT MID)	1						
13	T2391-96111	PAD SOUND INSULATION	1						
13	T2391-96112	SOUND INSULATION PAD	1					<------	
14	T2391-96131	PAD SOUND ABSORPTION	1						

----> Old replace New
<---- New replace Old
<-X-> Not interchangeable
<---> Interchangeable
<-O-> Interchangeable with another part(s)
* Please place an order assy(*)

https://tractormanualz.com/

TB1100C-T2210A

Interior material group(option)

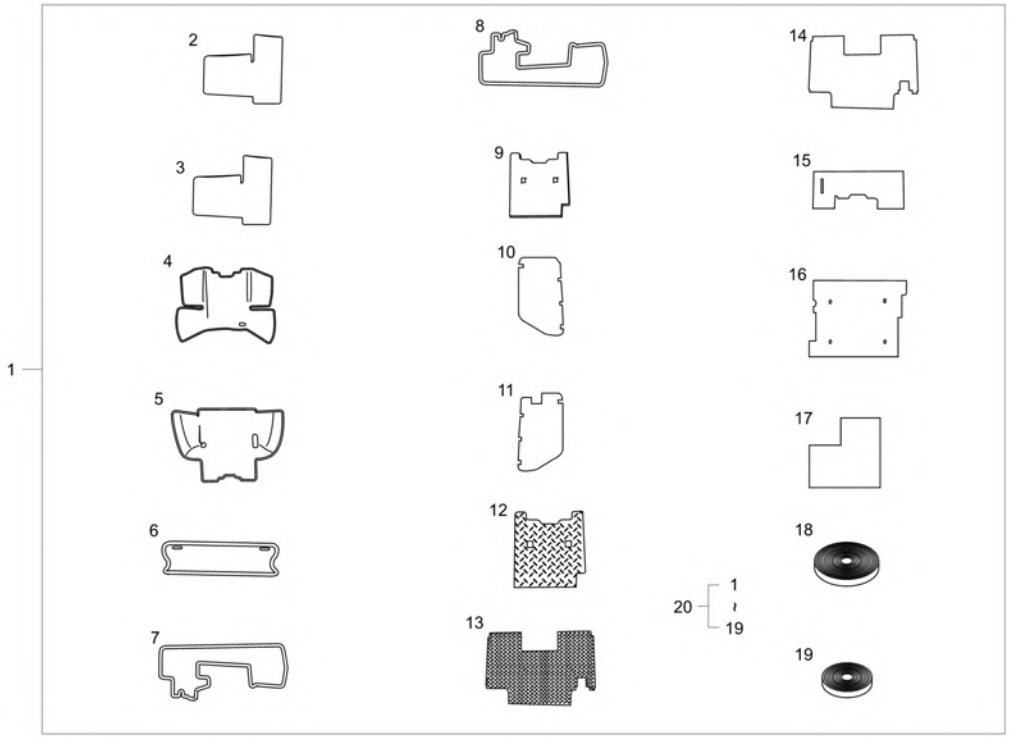

A : CK2610

No.	Part Number	Description	Qty A	Qty B	Qty C	Qty D	Qty E	I.C	Remark
14	T2391-96132	SOUND ABSORPTION PAD	1					<------	
15	T2391-96211	PAD SOUND ABSORPTION FLOOR SEAT FR- ME	1						
16	T2391-96221	PAD SOUND ABSORPTION FLOOR SEAT LWR	1						
17	T4665-91211	PLATE, HEAT SHIELD	1						
18	T2131-95111	VELCO	1						
19	T2131-95121	VELCO	1						
20	T4675-80214	interior material ASSY	1						

----> Old replace New
<---> Interchangeable
* Please place an order assy(*)
<---- New replace Old
<-O-> Interchangeable with another part(s)
<-X-> Not interchangeable

https://tractormanualz.com/

CK30C-T2230A

REAR WIPER GROUP(OPTION)

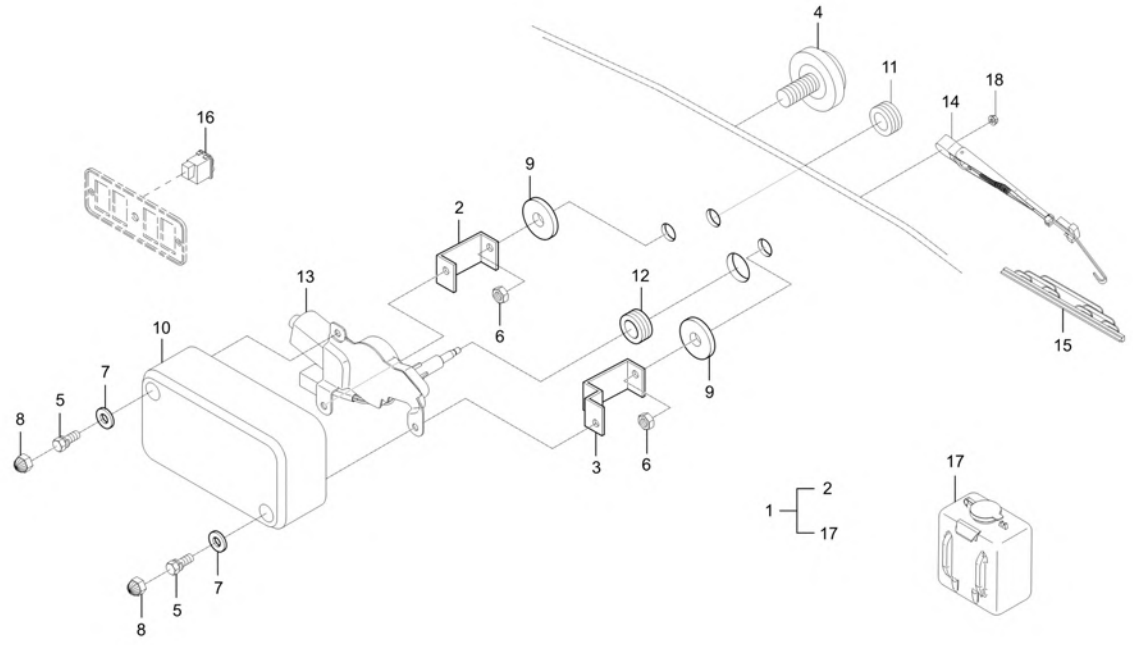

A : CK2610

No.	Part Number	Description	Qty A	Qty B	Qty C	Qty D	Qty E	I.C	Remark
1	T2131-88503	ASSY, REAR WIPER KIT	1						
1	T2131-88504	ASSY, REAR WIPER KIT	1					<------	
1	T2131-88505	ASSY, REAR WIPER KIT	1					<------	
2	T4815-89141	BRACKET A V dnr v	1						N
3	T4815-89151	BRACKET B	1						N
4	T4620-81842	BOLT, CUSHION v	2						
5	01123-50820	BOLT, WASHER v	3						M8XP1.25
6	02114-50080	NUT v	2						M8*P1.25
7	04015-50080	PLAIN WASHER	1						M8
8	T4815-93211	NUT CAP	2						M8
9	T4520-88401	PACKING	2						
10	T4815-89162	COVER v	1						N
10	T4815-89163	COVER	1					<----->	T2.0
11	T4815-89171	GROMMET v	1						N
12	T4815-78112	GROMMET v	1						
13	T4815-88211	WIPER MOTOR ASS`Y v	1						
13	TG15-0243A	ASSY MOTOR, WIPER	1					<------	
14	T4815-88221	ARM, WIPER	1						

----> Old replace New <---- New replace Old <-X-> Not interchangeable
<---> Interchangeable <-O-> Interchangeable with another part(s)
* Please place an order assy(*)

https://tractormanualz.com/

CK30C-T2230A

REAR WIPER GROUP(OPTION)

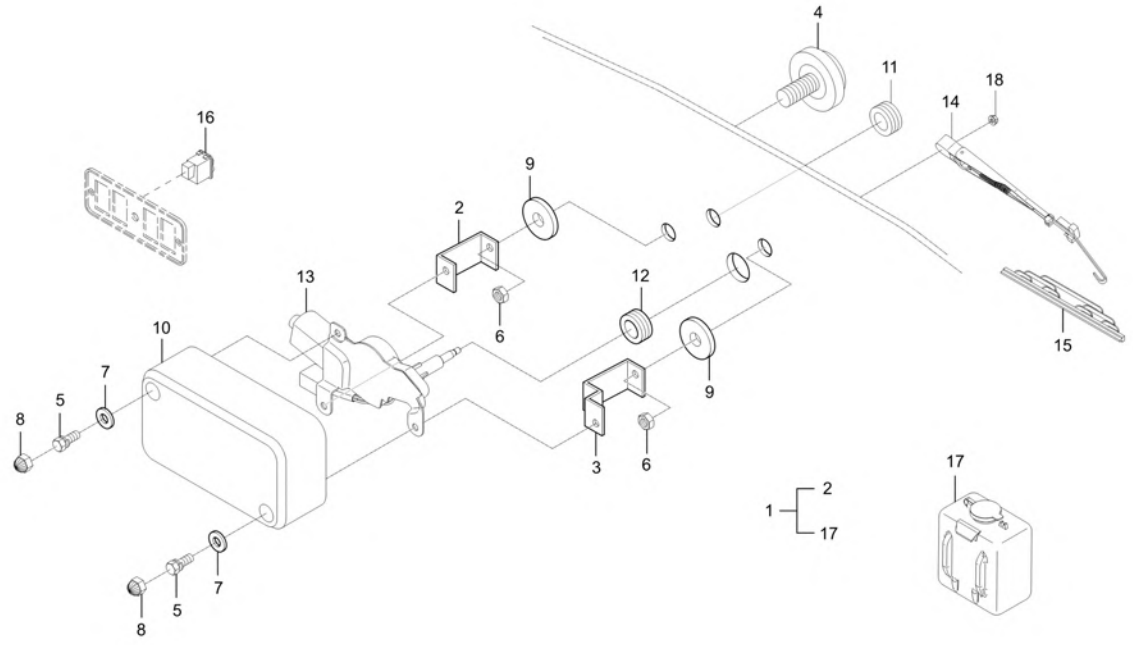

A : CK2610

No.	Part Number	Description	Qty A	Qty B	Qty C	Qty D	Qty E	I.C	Remark
15	T4686-82431	WIPER 13 IN	1						
16	T4520-54222	SWITCH WORKING LAMP	1						
17	T4815-87181	WASHER TANK, REAR WIPER	1						
18	02761-50060	NUT, FLANGE	1						M6XP1.0

----> Old replace New
<----> Interchangeable
* Please place an order assy(*)
<---- New replace Old
<-O-> Interchangeable with another part(s)
<-X-> Not interchangeable

https://tractormanualz.com/

TC2-G6G2401

LOWER LINK GROUP(OPTION)

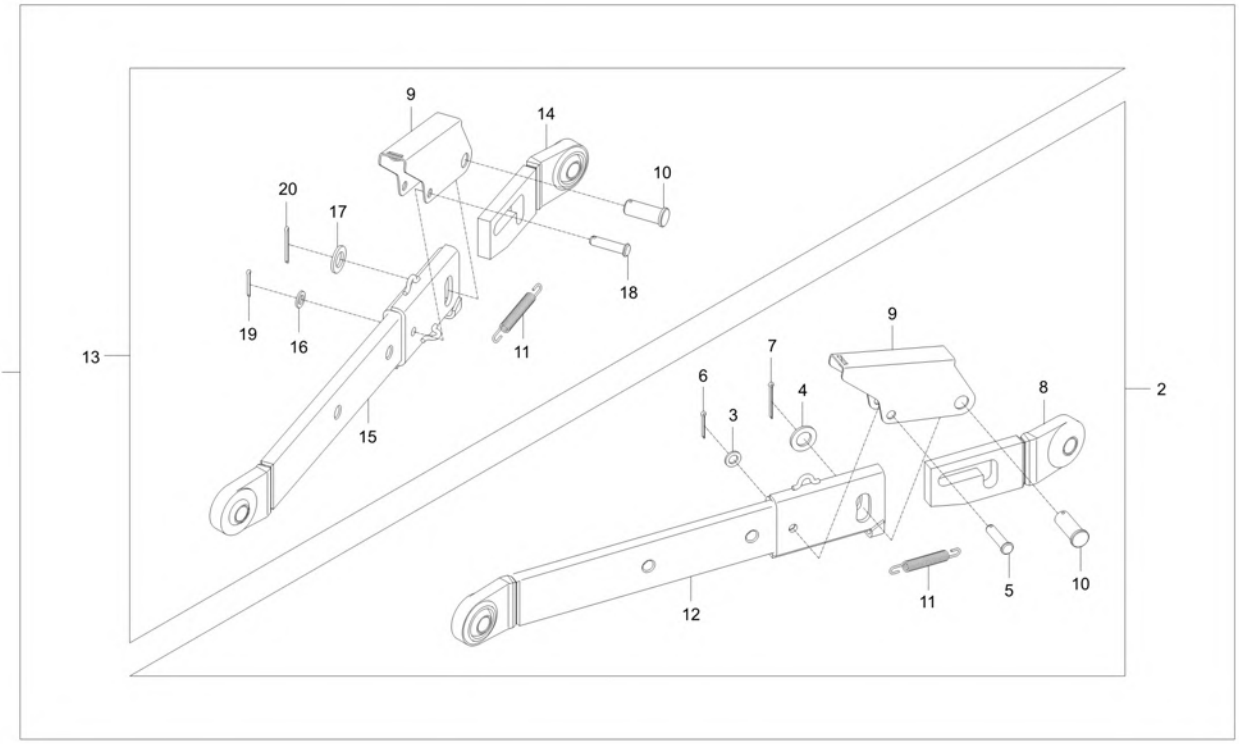

A : CK2610

No.	Part Number	Description	Qty A	Qty B	Qty C	Qty D	Qty E	I.C	Remark
1	T5855-A5201	USE CKA117	1						
2	T5815-65312	LOWER LINK ASSY LH v	1						-
3	04011-50120	WASHER, PLAIN	1						M12
4	04011-50200	WASHER, PLAIN	1						M20
5	05122-51250	PIN, JOINT	1						DIA12XL50
6	05511-50430	CARTER KEY v	1						DIA3.6XL30
7	05511-50445	PIN, SPLIT	1						DIA3.6XL45
8	T2615-93031	HOUSING, LOWER LINK(LH) v	1						
9	T4680-93041	COVER, LWR	1						T2.3
10	T4680-93061	PIN	1						
11	T4850-93051	SPRING	1						DIA2
12	T5815-65321	BODY, LOWER LINK (LH)	1						N
13	T5815-65332	LOWER LINK ASSY RH v	1						-
14	T2615-93131	HOUSHING, LOWER LINK (RH) dnr v	1						
15	T5815-65341	LOWER LINK, (RH)	1						N
16	04011-50120	WASHER, PLAIN	1						M12
17	04011-50200	WASHER, PLAIN	1						M20
18	05122-51250	PIN, JOINT	1						DIA12XL50

----> Old replace New
<----> Interchangeable
* Please place an order assy(*)
<---- New replace Old
<-O-> Interchangeable with another part(s)
<-X-> Not interchangeable

https://tractormanualz.com/

TC2-G6G2401

LOWER LINK GROUP(OPTION)

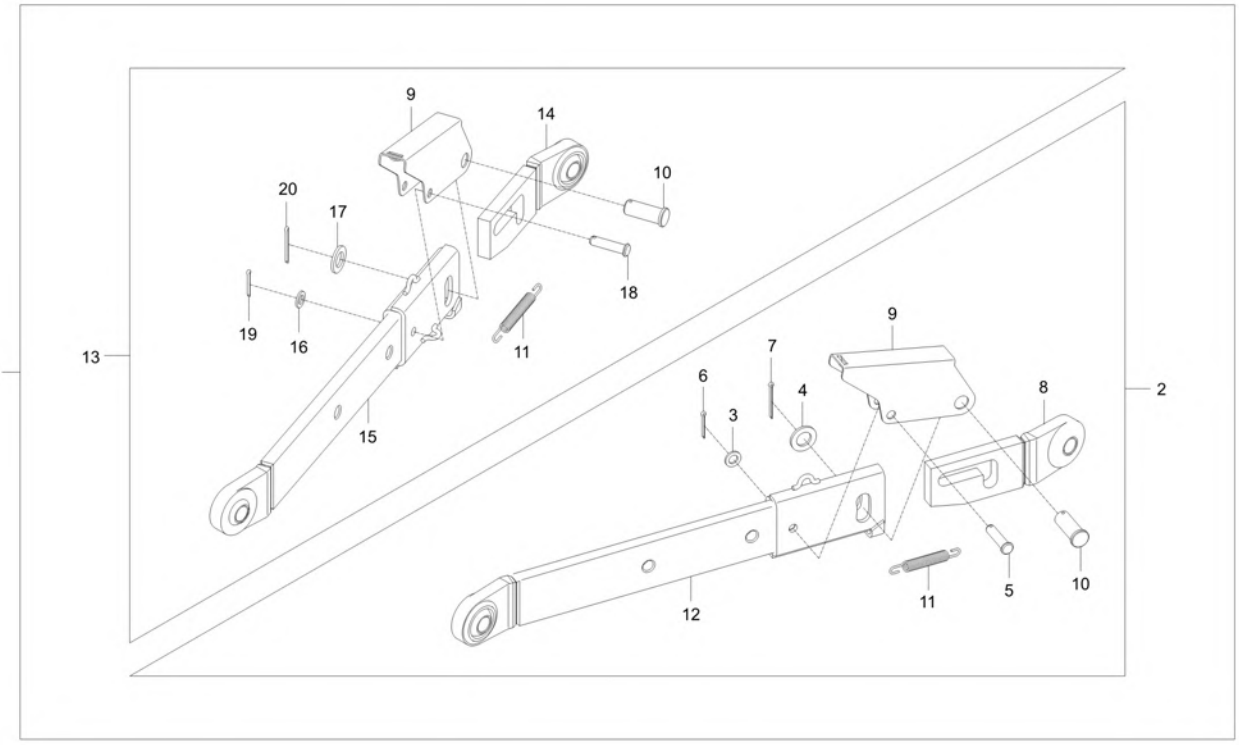

A : CK2610

No.	Part Number	Description	Qty A	Qty B	Qty C	Qty D	Qty E	I.C	Remark
19	05511-50430	CARTER KEY v	1						DIA3.6XL30
20	05511-50445	PIN, SPLIT	1						DIA3.6XL45

----> Old replace New
<---- New replace Old
<-X-> Not interchangeable
<---> Interchangeable
<-O-> Interchangeable with another part(s)
* Please place an order assy(*)

https://tractormanualz.com/

TC2-G6F9007 ACCESSORIES_SERVICE PARTS GROUP

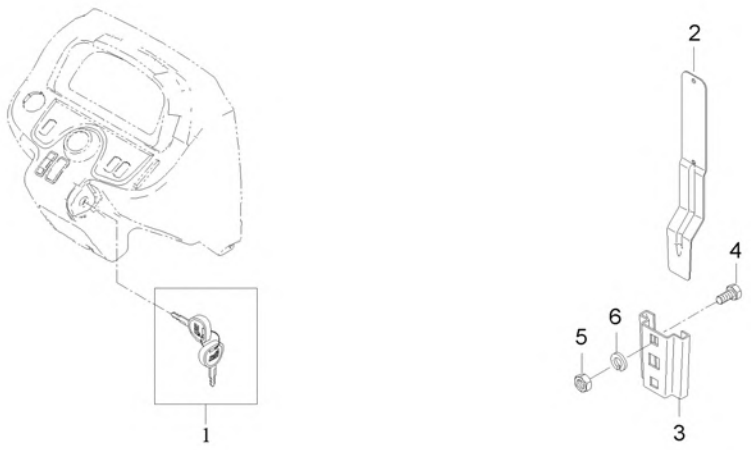

A : CK2610

No.	Part Number	Description	Qty A	Qty B	Qty C	Qty D	Qty E	I.C	Remark
1	T5520-75191	DOUBLE SIDED KEY ASSY v	1						
1	TG35-0114A	ASSY KEY	1					<------	
2	T2555-98511	BRACKET, SMV	1						
3	T4125-70511	BRACKET	1						T1.6
4	T4125-70521	SCREW	2						
5	02114-50080	NUT v	2						M8*P1.25
6	04512-50080	SPRING WASHER	2						M08

----> Old replace New
<---- New replace Old
<-X-> Not interchangeable
<---> Interchangeable
<-O-> Interchangeable with another part(s)
* Please place an order assy(*)

https://tractormanualz.com/

TC2-G591002

OPTIONAL LAMP GROUP

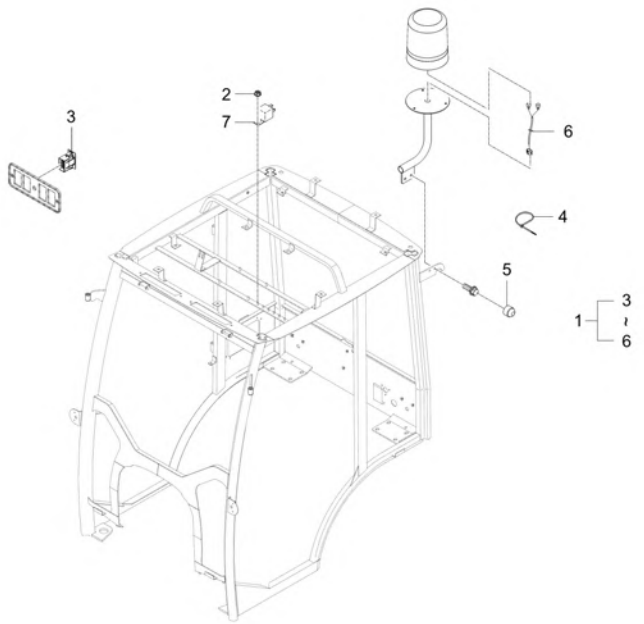

A : CK2610

No.	Part Number	Description	Qty A	Qty B	Qty C	Qty D	Qty E	I.C	Remark
1	TC26-0382A	LAMP-KIT	1						
2	02751-50060	NUT, FLANGE	1						M6XP1.0
3	T4520-54222	SWITCH WORKING LAMP	1						
4	T4520-82551	BAND, CORD v	3						L270
5	T4680-93211	NUT CAP M6	3						
6	T4688-69321	WIRE 2, LAMP CONNECTION HARNESS v	1						
7	T5535-69961	RELAY,5P	1						Bracket

----> Old replace New
<---> Interchangeable
* Please place an order assy(*)
<---- New replace Old
<-O-> Interchangeable with another part(s)
<-X-> Not interchangeable

https://tractormanualz.com/

TC2-G611002

AIR CLEANER GROUP (OPTION)

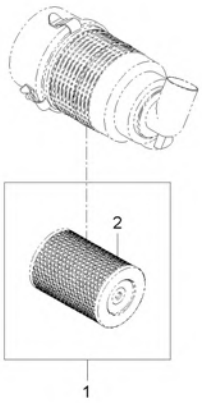

A : CK2610

No.	Part Number	Description	Qty A	Qty B	Qty C	Qty D	Qty E	I.C	Remark
1	TC26-A0006A	Safety filter Kit	1						
2	T2198-11071	FUEL, ELEMENT ASSY IN	1						

----> Old replace New
<---> Interchangeable
* Please place an order assy(*)
<---- New replace Old
<-O-> Interchangeable with another part(s)
<-X-> Not interchangeable

https://tractormanualz.com/

TC2-G662002

STEP MAT GROUP (OPTION)

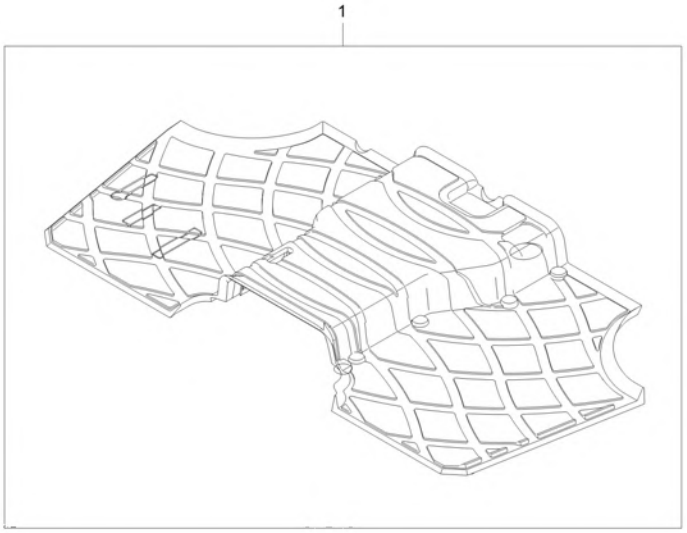

A : CK2610

No.	Part Number	Description	Qty A	Qty B	Qty C	Qty D	Qty E	I.C	Remark
1	TC26-A0004C	MAT KIT	1						

----> Old replace New
<----> Interchangeable
* Please place an order assy(*)
<---- New replace Old
<-O-> Interchangeable with another part(s)
<-X-> Not interchangeable

https://tractormanualz.com/

TC2-G664002

ARM REST GROUP (OPTION)

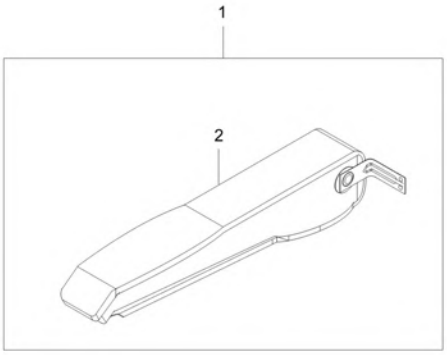

A : CK2610

No.	Part Number	Description	Qty A	Qty B	Qty C	Qty D	Qty E	I.C	Remark
1	TC26-A0001B	ARMREST KIT	1						
2	T5855-90802	ASSY, SEAT ARMREST	1					<------	

----> Old replace New
<---> Interchangeable
* Please place an order assy(*)
<---- New replace Old
<-O-> Interchangeable with another part(s)
<-X-> Not interchangeable

https://tractormanualz.com/

TC2-G684002

LIFT ROD GROUP (OPTION)

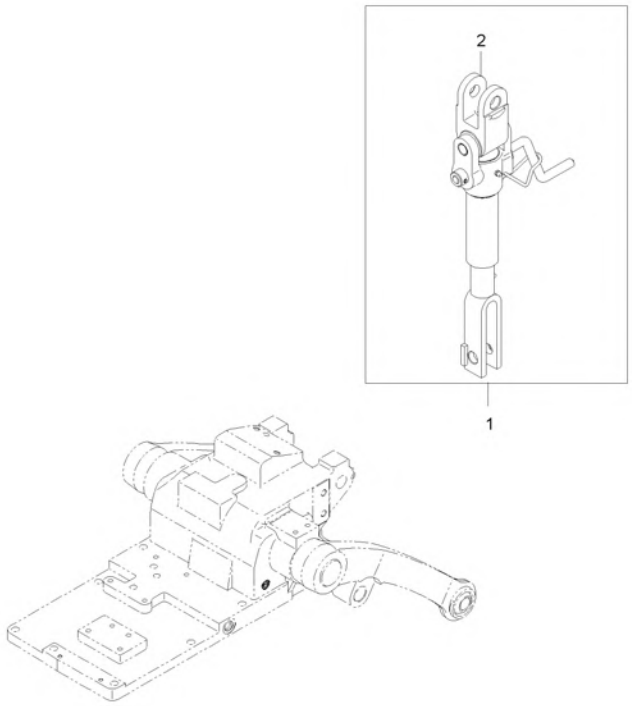

A : CK2610

No.	Part Number	Description	Qty A	Qty B	Qty C	Qty D	Qty E	I.C	Remark
1	TC26-A0002A	LIFT ROD KIT	1						
2	T2185-71613	LIFT ROD ASSY RH v	1						

----> Old replace New
<---- New replace Old
<-X-> Not interchangeable
<---> Interchangeable
<-O-> Interchangeable with another part(s)
* Please place an order assy(*)

https://tractormanualz.com/

INDEX 1

https://tractormanualz.com/

PART NO.	PAGE	PART NO.	PAGE	PART NO.	PAGE	PART NO.	PAGE	PART NO.	PAGE
01020-50614	37	01123-50825	78	01133-51025	137	01513-50618	22	01754-50625	157
01023-50616	111	01123-50825	90	01133-51025	162	01513-50822	14	01754-50812	44
01023-50618	30	01123-50825	166	01133-51025	204	01513-50822	21	01754-50812	47
01023-50620	16	01123-50828	30	01133-51030	59	01513-50822	31	01754-50812	51
01023-50625	188	01123-50828	30	01133-51030	78	01513-50822	78	01754-50812	51
01023-50628	29	01123-50830	90	01133-51030	233	01513-50835	3	01754-50812	54
01023-50630	237	01123-50830	142	01133-51035	170	01513-50880	35	01754-50812	54
01023-50648	13	01123-50830	145	01133-51045	95	01517-51028	20	01754-50812	97
01023-50650	13	01123-50830	167	01133-51045	137	01517-51030	83	01754-50812	137
01023-50665	207	01123-50835	15	01133-51045	137	01517-51475	228	01754-50812	233
01023-50665	231	01123-50835	16	01133-51050	96	01517-51632	49	01754-50816	39
01023-50680	10	01123-50840	80	01133-51075	61	01518-50822	30	01754-50816	39
01023-50680	32	01123-50845	78	01133-51220	71	01574-51230	38	01754-50816	40
01025-50620	157	01123-50845	82	01133-51222	76	01574-51230	83	01754-50816	108
01027-50614	145	01123-50850	181	01133-51222	85	01574-51235	35	01754-50816	133
01027-50616	126	01123-50860	16	01133-51225	72	01654-50820	8	01754-50816	137
01027-50616	176	01123-50860	203	01133-51225	143	01654-50830	4	01754-50816	137
01053-50645	90	01123-50860	216	01133-51225	202	01674-51032	8	01754-50816	144
01073-51630	55	01123-50860	220	01133-51225	214	01674-51032	20	01754-50816	144
01073-51630	202	01123-50860	224	01133-51230	83	01754-50610	92	01754-50816	155
01073-51630	214	01123-50865	80	01133-51240	20	01754-50610	99	01754-50816	156
01123-50812	83	01123-50870	16	01135-51020	80	01754-50610	100	01754-50816	156
01123-50814	21	01123-50875	16	01135-51025	181	01754-50610	106	01754-50816	167
01123-50814	75	01123-50880	35	01135-51030	133	01754-50610	112	01754-50816	170
01123-50814	147	01123-50885	16	01150-50820	186	01754-50610	112	01754-50816	170
01123-50816	14	01123-51025	73	01173-51430	162	01754-50610	115	01754-50816	172
01123-50816	71	01123-51025	75	01173-51435	208	01754-50612	94	01754-50816	179
01123-50816	71	01123-51030	205	01173-51435	212	01754-50612	124	01754-50816	196
01123-50816	152	01123-51030	216	01173-51435	229	01754-50612	145	01754-50816	230
01123-50816	153	01123-51030	220	01173-51440	64	01754-50612	176	01754-50820	6
01123-50816	158	01123-51030	224	01173-51455	208	01754-50612	179	01754-50820	19
01123-50816	203	01125-50814	73	01173-51455	212	01754-50612	206	01754-50820	31
01123-50816	210	01125-50820	134	01173-51455	229	01754-50612	206	01754-50820	130
01123-50816	213	01125-50820	166	01173-51475	228	01754-50614	124	01754-50820	131
01123-50816	216	01125-50820	179	01173-51690	128	01754-50614	167	01754-50820	131
01123-50816	220	01125-50825	170	01173-51690	129	01754-50614	167	01754-50820	134
01123-50816	224	01127-50825	98	01173-51690	136	01754-50614	176	01754-50820	156
01123-50818	5	01127-50825	155	01173-51690	209	01754-50616	27	01754-50820	156
01123-50818	19	01127-50825	156	01173-51690	213	01754-50616	28	01754-50820	167
01123-50818	160	01127-50825	170	01175-51030	162	01754-50616	113	01754-50820	170
01123-50820	42	01133-51003	83	01175-51250	65	01754-50616	114	01754-50820	237
01123-50820	77	01133-51016	88	01177-51030	38	01754-50616	141	01754-50820	242
01123-50820	80	01133-51020	88	01177-51030	127	01754-50616	147	01754-50820	243
01123-50820	111	01133-51020	137	01177-51030	135	01754-50616	150	01754-50822	137
01123-50820	167	01133-51020	137	01177-51235	38	01754-50616	157	01754-50822	137
01123-50820	200	01133-51020	155	01177-51235	49	01754-50616	166	01754-50822	156
01123-50820	238	01133-51020	156	01177-51235	68	01754-50616	172	01754-50825	181
01123-50820	248	01133-51020	170	01177-51235	127	01754-50620	23	01754-50830	29
01123-50822	3	01133-51025	36	01177-51235	135	01754-50620	28	01754-50830	181
01123-50822	21	01133-51025	45	01177-51240	35	01754-50620	115	01754-50830	194
01123-50822	52	01133-51025	46	01177-51250	38	01754-50620	188	01754-50830	196
01123-50822	158	01133-51025	67	01202-50620	145	01754-50620	237	01754-50830	241
01123-50825	3	01133-51025	80	01205-50616	210	01754-50622	124	01754-50835	31
01123-50825	70	01133-51025	83	01513-50614	28	01754-50622	176	01754-50835	99
01123-50825	77	01133-51025	137	01513-50616	16	01754-50625	147	01754-50835	112

https://tractormanualz.com/

PART NO.	PAGE	PART NO.	PAGE	PART NO.	PAGE	PART NO.	PAGE	PART NO.	PAGE
01754-50835	188	02156-50080	148	02761-50060	94	04011-50120	250	04013-50140	159
01754-50870	31	02156-50080	150	02761-50060	103	04011-50140	145	04013-50140	229
01774-51003	98	02156-50080	152	02761-50060	104	04011-50140	228	04014-50080	234
01774-51030	160	02156-50080	153	02761-50060	201	04011-50160	128	04014-50100	4
01811-50615	124	02156-50080	172	02761-50060	249	04011-50160	129	04014-50180	228
01811-50615	176	02156-50080	234	02763-50080	14	04011-50160	136	04015-50050	207
02014-50100	207	02172-50160	68	02763-50080	31	04011-50160	209	04015-50050	231
02014-50100	231	02176-50100	95	02763-50080	95	04011-50160	213	04015-50060	144
02054-50040	109	02176-50100	96	02763-50080	96	04011-50180	15	04015-50060	163
02054-50040	194	02176-50100	98	02763-50080	99	04011-50180	143	04015-50060	207
02054-50040	199	02176-50100	137	02763-50080	112	04011-50180	148	04015-50060	231
02054-50040	236	02176-50100	145	02763-50080	130	04011-50180	149	04015-50080	248
02054-50040	241	02176-50100	149	02763-50080	131	04011-50180	234	04512-50040	109
02056-50060	16	02176-50100	162	02763-50080	170	04011-50200	250	04512-50040	194
02056-50060	22	02176-50100	179	02763-50080	170	04011-50200	250	04512-50040	196
02056-50060	23	02176-50100	206	02771-50100	155	04012-50050	150	04512-50040	236
02056-50060	30	02176-50120	35	02783-50100	156	04012-50050	172	04512-50040	240
02056-50060	87	02176-50120	38	03014-50625	244	04012-50060	10	04512-50060	16
02056-50060	137	02176-50120	49	03014-50625	245	04012-50060	29	04512-50060	22
02056-50060	166	02176-50120	83	03014-50630	194	04012-50060	32	04512-50060	30
02056-50060	238	02176-50120	83	03014-50630	196	04012-50060	137	04512-50060	244
02056-50060	245	02176-50120	137	03014-50630	240	04012-50060	143	04512-50060	245
02076-50120	65	02176-50120	173	03016-50616	142	04012-50060	145	04512-50080	22
02076-50140	159	02176-50120	202	03016-50616	145	04012-50080	36	04512-50080	30
02076-50160	55	02176-50120	214	03024-50420	244	04012-50080	143	04512-50080	35
02076-50160	202	02176-50140	68	03024-50420	245	04012-50080	179	04512-50080	78
02076-50160	214	02176-50140	228	03024-50510	18	04013-50040	189	04512-50080	97
02076-50160	235	02176-50180	228	03024-50512	145	04013-50040	194	04512-50080	98
02114-50060	191	02751-50050	209	03024-50514	143	04013-50040	196	04512-50080	148
02114-50060	244	02751-50060	23	03024-50520	25	04013-50040	236	04512-50080	150
02114-50080	185	02751-50060	147	03024-50520	26	04013-50040	240	04512-50080	172
02114-50080	185	02751-50060	167	03054-50408	92	04013-50060	188	04512-50080	186
02114-50080	186	02751-50060	188	03054-50408	100	04013-50060	191	04512-50080	189
02114-50080	186	02751-50060	194	03054-50414	196	04013-50060	194	04512-50080	192
02114-50080	186	02751-50060	198	03054-50416	189	04013-50060	196	04512-50080	234
02114-50080	188	02751-50060	207	03054-50416	194	04013-50060	207	04512-50080	243
02114-50080	189	02751-50060	231	03054-50416	194	04013-50060	231	04512-50080	252
02114-50080	191	02751-50060	237	03054-50416	194	04013-50060	237	04512-50100	95
02114-50080	192	02751-50060	240	03054-50416	196	04013-50060	240	04512-50100	96
02114-50080	192	02751-50060	242	03054-50416	196	04013-50060	244	04512-50100	98
02114-50080	196	02751-50060	243	03054-50416	196	04013-50060	245	04512-50100	101
02114-50080	200	02751-50060	253	03054-50416	240	04013-50080	150	04512-50100	137
02114-50080	243	02751-50080	33	03054-50416	240	04013-50080	153	04512-50100	145
02114-50080	248	02751-50080	125	03054-50416	241	04013-50080	172	04512-50100	150
02114-50080	252	02751-50080	176	03054-50420	194	04013-50080	196	04512-50100	207
02114-50120	209	02751-50080	181	03054-50420	240	04013-50100	98	04512-50100	231
02114-50120	212	02751-50080	193	03054-50614	192	04013-50100	145	04512-50120	35
02156-50080	22	02751-50080	193	03056-50408	179	04013-50100	152	04512-50120	38
02156-50080	30	02751-50080	236	03056-50416	198	04013-50100	160	04512-50120	49
02156-50080	35	02751-50080	242	03056-50510	144	04013-50100	179	04512-50120	83
02156-50080	78	02751-50080	243	04011-50100	137	04013-50100	198	04512-50120	83
02156-50080	82	02761-50040	25	04011-50100	137	04013-50100	206	04512-50120	138
02156-50080	97	02761-50040	26	04011-50100	156	04013-50100	207	04512-50120	173
02156-50080	98	02761-50050	105	04011-50100	167	04013-50100	210	04512-50120	202
02156-50080	140	02761-50060	28	04011-50120	250	04013-50100	231	04512-50120	214

https://tractormanualz.com/

PART NO.	PAGE	PART NO.	PAGE	PART NO.	PAGE	PART NO.	PAGE	PART NO.	PAGE
04512-50140	64	04612-00250	71	04811-00140	233	05012-01018	49	05515-51000	213
04512-50140	68	04612-00250	78	04811-00150	15	05012-01018	61	05515-51600	128
04512-50140	128	04612-00250	153	04811-00150	15	05012-01020	35	05515-51600	129
04512-50140	128	04612-00300	40	04811-00150	16	05012-01020	38	05515-51600	136
04512-50140	129	04612-00300	48	04811-00160	8	05012-01020	64	05515-51600	161
04512-50140	129	04612-00300	58	04811-00200	38	05112-50840	36	05515-51600	208
04512-50140	136	04612-00320	58	04811-00210	90	05112-50855	192	05515-51600	208
04512-50140	136	04612-00350	39	04811-00220	15	05122-50618	138	05515-51600	212
04512-50140	159	04612-00400	39	04811-00240	48	05122-50828	153	05515-51600	212
04512-50140	162	04612-00400	59	04811-00250	90	05122-51020	167	05525-50600	138
04512-50140	208	04612-00450	76	04811-00360	15	05122-51025	167	05525-50600	143
04512-50140	208	04612-00450	85	04811-00390	49	05122-51025	209	05525-50600	145
04512-50140	209	04612-00500	65	04811-00420	68	05122-51025	209	05525-50600	179
04512-50140	212	04613-50060	89	04811-00460	71	05122-51025	213	05525-50600	179
04512-50140	212	04613-50060	89	04811-00490	68	05122-51028	152	05525-50800	143
04512-50140	213	04613-50060	89	04811-06350	71	05122-51028	210	05525-50800	144
04512-50140	228	04613-50060	145	04811-06420	57	05122-51250	250	05525-50800	148
04512-50140	229	04613-50060	186	04811-10100	54	05122-51250	250	05525-50800	234
04512-50140	229	04613-50060	192	04811-10300	1	05411-00412	42	05525-51000	149
04512-50160	55	04613-50100	189	04811-10800	78	05411-00420	23	05624-20408	120
04512-50160	128	04613-50120	52	04811-10850	78	05411-00528	56	05624-20408	164
04512-50160	129	04717-01000	37	04811-50300	18	05411-00540	47	05712-00410	13
04512-50160	136	04717-01000	38	04811-50850	68	05411-00625	42	05712-00525	21
04512-50160	202	04717-01000	60	04811-51050	64	05411-00625	44	05712-00720	1
04512-50160	209	04717-01000	65	04814-06310	28	05411-00630	143	05712-00720	5
04512-50160	213	04717-01000	233	04816-00140	81	05411-00630	148	05712-00720	19
04512-50160	214	04717-01200	8	04816-00200	80	05411-00630	149	05712-00720	32
04512-50160	229	04717-02650	38	04816-00200	80	05411-00630	234	06311-75018	12
04512-50160	235	04724-00140	27	04816-00200	80	05411-00635	71	06311-75045	12
04512-50180	228	04724-00140	89	04816-00200	80	05411-00636	71	06331-35010	233
04611-00120	51	04810-00140	76	04816-00200	203	05411-00645	233	06331-45010	37
04611-00120	54	04810-00140	85	04816-00200	204	05411-00840	47	06331-45010	38
04611-00420	155	04810-00180	78	04817-00180	78	05411-00840	153	06331-45010	60
04611-00470	233	04810-00200	80	04817-00200	80	05411-00855	76	06331-45010	65
04611-00520	42	04810-00200	80	04817-00200	80	05411-00855	85	06350-00607	5
04611-00520	52	04810-00200	80	04817-00200	80	05511-50212	150	06350-00708	1
04611-00520	57	04810-00200	80	04817-00200	80	05511-50212	172	06613-10010	68
04611-00520	232	04810-00200	216	04817-00200	204	05511-50215	144	06613-10010	69
04611-00720	62	04810-00200	216	04817-00200	204	05511-50220	36	06613-10010	90
04611-00720	64	04810-00200	220	04817-00200	216	05511-50220	145	06613-20010	68
04611-00720	65	04810-00200	220	04817-00200	216	05511-50220	153	06613-20010	69
04611-00800	65	04810-00200	224	04817-00200	220	05511-50318	152	07715-00401	42
04611-00850	49	04810-00200	224	04817-00200	220	05511-50320	87	07715-00805	48
04612-00150	145	04810-00280	77	04817-00200	224	05511-50320	138	07715-01605	42
04612-00150	179	04810-00280	77	04817-00200	225	05511-50325	159	07715-01605	44
04612-00160	90	04810-00600	76	05012-00408	4	05511-50430	250	07715-01605	51
04612-00170	155	04810-00600	85	05012-00408	12	05511-50430	251	07715-01605	54
04612-00180	143	04811-00060	27	05012-00609	12	05511-50445	250	07715-01605	232
04612-00180	148	04811-00140	44	05012-00612	12	05511-50445	251	07715-03213	15
04612-00180	149	04811-00140	47	05012-00612	15	05515-50800	151	07811-10820	24
04612-00180	234	04811-00140	47	05012-00616	36	05515-50800	179	07918-00001	24
04612-00190	7	04811-00140	51	05012-00818	59	05515-51000	159	08101-06009	45
04612-00240	21	04811-00140	54	05012-00818	83	05515-51000	167	08101-06010	45
04612-00250	40	04811-00140	80	05012-00818	233	05515-51000	167	08101-06010	65
04612-00250	56	04811-00140	203	05012-01018	12	05515-51000	209	08101-06012	65

https://tractormanualz.com/

PART NO.	PAGE	PART NO.	PAGE	PART NO.	PAGE	PART NO.	PAGE	PART NO.	PAGE
08101-06204	233	15021-1424-1	7	37150-3447-1	83	52794-4242-1	199	E5500-73342	31
08101-06205	40	15021-3366-1	13	37150-3447-1	94	52794-4242-1	199	E5500-73343	12
08101-06205	52	15108-5728-4	23	37150-3447-1	94	53650-6127-1	206	E5500-73343	31
08101-06205	57	15108-5728-5	23	37150-3447-1	107	53650-6127-1	206	E5500-74213	31
08101-06205	232	15121-5385-2	25	37150-3447-1	115	54821-3818-2	125	E5600-0304C	14
08101-06206	65	15121-5385-2	26	37150-3447-1	116	54821-3818-2	177	E5600-A0032	19
08101-06207	39	15221-0175-1	14	37150-3447-1	194	55571-3238-1	144	E5603-16011	5
08101-06207	52	15221-0338-3	12	37150-3447-1	241	57781-5121-1	147	E5603-16151	5
08101-06207	64	15221-0339-2	12	37155-3447-1	73	62331-1853-2	42	E5603-52111	21
08101-06207	65	15221-0339-2	37	37155-3447-1	75	62331-1853-2	44	E5608-99522	11
08101-06209	49	15221-1324-2	7	37155-3447-1	98	62331-1853-2	51	E5616-23015	1
08101-06210	49	15221-1632-1	21	37155-3447-1	181	62331-1853-2	54	E5619-12311	33
08101-06212	61	15221-3361-1	13	37220-2125-1	51	66204-3623-1	125	E5627-57482	24
08101-06304	232	15221-3361-2	13	37220-2125-1	54	66204-3623-1	176	E5629-36413	9
08101-06305	41	15221-3365-1	12	37300-2643-2	45	70515-1633-4TP	162	E5629-74111	10
08101-06305	52	15221-8821-1	23	37300-2644-2	45	76802-5691-0	70	E5629-74111	32
08101-06305	58	15221-8821-1	27	37300-2648-1	45	82KC-0641	168	E5640-01014	12
08101-06305	58	15221-8821-1	30	37300-2649-1	45	82KC-0807	87	E5640-01015	12
08101-06306	40	15241-3695-2	15	37300-2661-4	45	82KC-0807	138	E5640-16171	21
08101-06306	49	15291-0456-2	4	37300-2817-2	45	84612-1823-0	236	E5640-51011	21
08101-06306	70	15371-4217-0	22	37650-4368-0	70	99415-1502-2	235	E5640-A0013	12
08101-06307	70	15471-2331-1	1	37800-4387-1	46	99415-1503-1	235	E5700-73361	31
08101-06308	59	15471-5798-1	23	38240-1883-1	108	C7110-42862	106	E5700-73362	31
08121-06002	1	15471-9536-1	78	38240-1883-1	117	C7280-89541	192	E5752-35692	9
08141-06003	155	15521-1651-1	5	38240-1883-1	118	E1100-33752	8	E5752-35692	13
08141-06007	39	15521-1651-1	19	38240-1883-1	207	E1500-18411	124	E5760-53001	25
08153-06205	21	15521-3229-1	15	38240-1883-1	231	E1500-18411	124	E5775-52031	22
08240-00001	21	15521-5426-1	27	38240-2647-2	45	E1500-18411	176	E5775-52032	22
08241-05205	78	15521-7332-1	16	38245-2925-3	194	E1500-18411	176	E5800-01604	8
08511-02025	36	15521-9603-3	83	38245-2925-3	196	E5205-54271	28	E5800-01605	8
08511-02520	39	15532-7243-2	125	38245-2925-3	240	E5500-01623	8	E5800-01611	8
08511-04550	83	15532-7243-2	177	38325-1394-1	177	E5500-04464	4	E5800-11822	3
08511-05050	83	19202-3566-1	13	38325-1398-1	123	E5500-11302	1	E5800-12352	33
08711-30306	62	31220-2628-1	45	38325-1398-1	175	E5500-13332	7	E5800-12373	166
08822-53017	40	31220-2639-2	45	38360-2178-1	40	E5500-13333	7	E5800-14001	7
08822-53017	232	31220-2768-4	215	38430-1827-1	141	E5500-14232	7	E5800-14051	7
08822-83326	52	31355-2949-1	87	38430-1827-1	168	E5500-15553	5	E5800-22142	2
08823-03520	58	31355-2949-1	138	38430-2175-1	40	E5500-15553	19	E5800-23116	1
09318-88080	25	31355-2949-1	198	38430-2177-1	40	E5500-16272	5	E5800-32882	15
09318-88080	26	31355-3819-1	77	38430-2554-1	40	E5500-16272	19	E5800-32912	16
09318-88130	181	31365-2278-1	232	38430-2554-1	232	E5500-25164	20	E5800-32913	16
09318-88130	181	32150-2846-1	153	38435-2178-1	40	E5500-33142	18	E5800-33144	28
09318-88130	181	32240-7121-4	160	38440-4467-3	68	E5500-35154	13	E5800-42501	25
09318-88180	18	32240-7122-4	160	38440-4475-1	68	E5500-36932	15	E5800-42501	26
09500-35558	39	32244-7118-2	160	38630-4476-1	68	E5500-39013	13	E5800-42502	25
09500-45609	76	34150-2867-1	37	38630-4484-3	37	E5500-39013	93	E5800-42502	26
09500-45609	85	34150-37644	229	41011-5151-4	133	E5500-51662	28	E5800-51016	21
09502-55210	57	34150-3764-4TP	160	41182-4123-1	37	E5500-52112	21	E5800-52111	21
09502-55210	232	34150-3764-4TP	161	41182-5151-1	160	E5500-52122	21	E5800-64102	98
09661-40300	25	35110-7157-2	161	52200-2523-1	75	E5500-63016	95	E5800-65562	25
09661-40300	26	35225-4375-2	214	52200-2523-1	216	E5500-72922	31	E5800-65562	26
14911-4275-1	22	35820-7556-1	198	52200-2523-1	220	E5500-73265	31	E5800-73037	30
14911-4275-1	125	35820-7556-1	198	52200-2523-1	225	E5500-73272	31	E5800-73052	30
14911-4275-1	177	37150-34471	125	52300-3412-1	179	E5500-73332	16	E5800-73415	30
14971-4275-1	181	37150-34471	176	52794-4242-1	199	E5500-73342	12	E5800-73432	30

https://tractormanualz.com/

PART NO.	PAGE	PART NO.	PAGE	PART NO.	PAGE	PART NO.	PAGE	PART NO.	PAGE
E5800-73513	30	E6300-04054	4	E6305-36422	9	EA11-0014A	3	T2131-82511	240
E5800-73522	30	E6300-04064	4	E6305-54221	23	EA11-0015A	3	T2131-82521	194
E5800-73551	30	E6300-04362	4	E6305-54281	23	EA11-0016A	3	T2131-82521	196
E5800-96032	15	E6300-04363	4	E6305-54421	23	EA11-0019A	32	T2131-82521	240
E5800-96831	16	E6300-04542	4	E6305-92021	23	EA11-0025A	34	T2131-83511	238
E5850-03313	14	E6300-04813	4	E6305-96652	23	EA11-0025B	34	T2131-83521	238
E5850-04081	16	E6300-04814	4	E6313-56421	29	EA11-0025C	34	T2131-83761	188
E5850-04082	16	E6300-04822	4	E6400-03141	14	EA11-0025D	34	T2131-83771	189
E5850-04114	15	E6300-21332	2	E6403-13361	7	EA11-0025E	34	T2131-84251	190
E5850-04115	15	E6300-21354	2	E6500-42413	22	EA11-0025F	34	T2131-84271	188
E5850-04132	16	E6300-22019	2	E6500-42414	22	EA13-0001A	2	T2131-85411	237
E5850-14504	18	E6300-22028	2	E6510-05511	18	EA18-0005A	11	T2131-85421	237
E5850-14512	18	E6300-22029	2	E6510-05552	3	EA18-0005B	11	T2131-86401	236
E5850-14522	18	E6300-22312	2	E6510-05552	18	EB54-0017A	12	T2131-86502	236
E5850-14561	18	E6300-23531	1	E6510-14532	18	EH16-0008A	10	T2131-88202	242
E5850-32617	15	E6300-23541	1	E6510-14671	18	F6800-15111	5	T2131-88231	193
E5850-33111	28	E6300-24012	6	E6510-23251	1	F6800-15111	19	T2131-88303	243
E5850-54252	27	E6300-24012	19	E6510-23252	1	F6800-91831	31	T2131-88503	200
E5850-54253	27	E6300-24253	6	E6510-33661	18	F6800-91841	77	T2131-88503	248
E5850-54261	27	E6300-24253	19	E6510-91502	7	F6800-91851	73	T2131-88504	200
E5850-54272	27	E6300-24281	19	E6720-21312	2	F6800-91851	73	T2131-88504	248
E5850-54273	27	E6300-24321	6	E6790-74251	10	F6800-91851	75	T2131-88505	200
E5850-54274	27	E6300-24321	19	E6790-74251	32	F6800-91851	203	T2131-88505	248
E5850-54282	27	E6300-24371	6	E6810-32292	15	F6800-91851	216	T2131-89111	243
E5850-54283	27	E6300-24371	19	E6820-60011	94	F6800-91851	220	T2131-95111	247
E5850-54291	27	E6300-35681	13	E6850-03451	14	F6800-91851	225	T2131-95121	247
E5850-54292	27	E6300-51052	21	E6850-57313	27	F6800-92451	33	T2135-68221	198
E5850-56021	29	E6300-51053	21	E6850-72913	31	F6800-92452	33	T2135-68221	198
E5850-56605	28	E6300-53005	25	E6850-73342	31	F6805-99521	11	T2135-69601	198
E5850-57112	23	E6300-53005	26	E6857-72531	32	F6805-99521	34	T2145-97151001	136
E5850-57154	23	E6300-53021	26	E6864-63011	96	F6860-96042	31	T2165-39281	90
E5850-57212	23	E6300-53621	25	E7103-63821	20	K5400-14572	59	T2181-25442	133
E5850-57212	27	E6300-53621	26	E7230-11081	175	K5400-14581	59	T2181-97191	128
E5850-57922	23	E6300-53651	25	E7240-32731	93	K5400-14591	59	T2181-97191	129
E5850-74151	10	E6300-53651	26	E7251-64011	98	K9100-50241	133	T2181-97191	136
E5850-74151	32	E6300-56414	29	E7251-64012	98	KX97382-S51	123	T2181-97191	209
E5850-92011	27	E6301-13111	7	E7300-11781	42	KX97382-S51	175	T2181-97191	213
E5850-A0029	15	E6301-13121	7	E7310-36431	9	P5370-69321	198	T2185-14723	36
E5853-73011	31	E6301-13151	7	E8103-52111	21	P5370-69321	198	T2185-21651	40
E5863-04612	20	E6301-14111	7	EA11-0001A	32	P5370-82551	115	T2185-21981	52
E5900-96021	12	E6301-14311	7	EA11-0004C	29	T2131-51031	188	T2185-24283	148
E5900-96022	12	E6301-14351	7	EA11-0007A	20	T2131-55452	244	T2185-24292	148
E5900-96022	14	E6301-14431	7	EA11-0007C	20	T2131-69351	198	T2185-26342	45
E5900-96032	12	E6301-21202	2	EA11-0007D	20	T2131-69803	198	T2185-26511	45
E6200-04623	95	E6301-33812	13	EA11-0007E	20	T2131-69811	243	T2185-26521	46
E6200-04623	96	E6301-54122	23	EA11-0008B	20	T2131-82141	185	T2185-27202	49
E6200-23472	1	E6302-04931	94	EA11-0008C	20	T2131-82151	185	T2185-38031	77
E6200-23482	1	E6302-21051	2	EA11-0008D	20	T2131-82161	186	T2185-41601	68
E6200-24112	1	E6302-21151	2	EA11-0008E	20	T2131-82171	186	T2185-41602	68
E6200-32112	8	E6302-21161	2	EA11-0010A	25	T2131-82191	187	T2185-41611	68
E6200-32113	8	E6303-33661	8	EA11-0010A	26	T2131-82211	236	T2185-41691	69
E6200-35012	13	E6303-33751	8	EA11-0011A	25	T2131-82221	237	T2185-42291	62
E6200-52142	22	E6303-33752	8	EA11-0011A	26	T2131-82411	194	T2185-42361	65
E6201-32443	17	E6303-65511	25	EA11-0012A	25	T2131-82511	194	T2185-42371	65
E6300-04044	4	E6303-65511	26	EA11-0012A	26	T2131-82511	196	T2185-42451	62

https://tractormanualz.com/

PART NO.	PAGE	PART NO.	PAGE	PART NO.	PAGE	PART NO.	PAGE	PART NO.	PAGE
T2185-42461	62	T2195-26521	45	T2391-82001	241	T2395-84411	238	T2610-39233	90
T2185-42471	62	T2198-11071	254	T2391-82014	240	T2395-94111	246	T2610-39252	90
T2185-42481	62	T2198-31052	106	T2391-82015	240	T2440-14971	36	T2610-39572	90
T2185-42491	62	T2198-69471	99	T2391-82016	240	T2440-21361	39	T2610-50271	134
T2185-42751	62	T2198-69471	112	T2391-82101	185	T2440-28812	150	T2610-52461	121
T2185-42761	62	T2198-82571	73	T2391-82111	185	T2440-28812	172	T2610-52461	164
T2185-42771	62	T2198-82571	75	T2391-82121	185	T2440-28822	150	T2610-95081	170
T2185-42781	62	T2198-82571	115	T2391-84102	188	T2440-28822	172	T2611-26693	121
T2185-42791	62	T2230-85242	128	T2391-84121	189	T2440-28851	150	T2611-26693	164
T2185-42801	62	T2230-85242	128	T2391-84131	189	T2440-28851	172	T2611-29731	162
T2185-43541	65	T2230-85242	129	T2391-84211	189	T2440-44251	232	T2611-54823	181
T2185-43871	64	T2230-85242	129	T2391-85102	189	T2445-29781TP	162	T2611-54824	181
T2185-43881	64	T2230-85242	136	T2391-85121	189	T2445-29822TP	158	T2611-54825	181
T2185-43891	64	T2230-85242	136	T2391-85171	237	T2540-27611	214	T2615-52131	205
T2185-43901	65	T2230-85242	209	T2391-85191	237	T2540-27621	214	T2615-52131	218
T2185-44764	149	T2230-85242	213	T2391-85211	189	T2540-27631	214	T2615-52131	222
T2185-51462	168	T2240-26355	46	T2391-86101	191	T2540-27711	214	T2615-52131	227
T2185-60372	142	T2241-50311	121	T2391-86111	191	T2540-27722	214	T2615-55112	121
T2185-66151	203	T2241-50311	164	T2391-86121	191	T2540-71811	159	T2615-55112	164
T2185-66151	216	T2280-17981	152	T2391-86211	237	T2546-44582	71	T2615-93031	250
T2185-66151	220	T2305-15871	152	T2391-86231	238	T2555-22291	42	T2615-93131	250
T2185-66151	225	T2305-21762	52	T2391-86232	238	T2555-23331	44	T2630-42321	61
T2185-70491	125	T2305-21762	56	T2391-86251	238	T2555-23331	47	T2630-43011	61
T2185-70491	134	T2305-26061	46	T2391-86252	238	T2555-23331	51	T2630-43021	61
T2185-70491	176	T2305-26071	46	T2391-86281	238	T2555-23331	54	T2630-43031	61
T2185-71241	145	T2305-26081	46	T2391-87021	236	T2555-23331	233	T2630-43102	61
T2185-71613	257	T2305-26641	89	T2391-87031	236	T2555-25311	40	T2630-43111	61
T2185-76021	78	T2305-26641	153	T2391-87041	236	T2555-26641	47	T2630-43121	61
T2185-79061	104	T2305-43883	35	T2391-87051	236	T2555-28461	48	T2630-95052	170
T2185-79061	104	T2350-13602006	125	T2391-87061	236	T2555-29111	52	T2660-71221	216
T2185-82551	73	T2350-13612	125	T2391-87101	191	T2555-52141	121	T2660-71221	221
T2185-82551	75	T2350-13612	177	T2391-87111	191	T2555-52141	164	T2660-71221	225
T2185-82551	115	T2350-23132	39	T2391-87121	191	T2555-52262	121	T2660-71222	205
T2185-82551	181	T2350-23132	40	T2391-89131	194	T2555-52262	164	T2660-71241	217
T2185-82551	210	T2350-23132	51	T2391-89131	241	T2555-52282	121	T2660-71241	221
T2185-85101004	207	T2350-23132	54	T2391-94122	246	T2555-52282	164	T2660-71241	225
T2185-85101004	231	T2350-25421	52	T2391-94131	246	T2555-52353	121	T2660-71242	205
T2185-85101005	207	T2350-25871	148	T2391-94141	246	T2555-52353	164	T2825-43741	214
T2185-85101005	231	T2350-25871	234	T2391-94152	246	T2555-55461	173	T4025-57521	121
T2185-97153	128	T2350-26661	138	T2391-96111	246	T2555-55462	173	T4025-57521	164
T2185-97153	129	T2350-50421	155	T2391-96112	246	T2555-55851	138	T4025-68301	108
T2185-97153	136	T2350-50431	155	T2391-96131	246	T2555-60741	145	T4025-68301	117
T2187-27611	202	T2350-50633	131	T2391-96132	247	T2555-60991	234	T4025-68301	118
T2187-27621	202	T2350-53192	234	T2391-96191	246	T2555-66142	155	T4025-68301	195
T2187-27631	202	T2350-55881	140	T2391-96211	247	T2555-66151	155	T4025-68301	196
T2187-27711	202	T2350-55881	152	T2391-96221	247	T2555-69023	106	T4025-68301	241
T2187-49401	202	T2350-55881	153	T2391-98111	246	T2555-69571	113	T4025-68351	106
T2187-49421	202	T2350-55922	150	T2391-98121	246	T2555-98511	252	T4115-43871	46
T2187-49431	202	T2350-55922	172	T2391-98131	246	T2610-21321	159	T4125-13561	124
T2187-49451	202	T2350-71831TP	159	T2391-98151	246	T2610-21754	40	T4125-13561	176
T2191-84731	189	T2350-95472	144	T2391-98161	246	T2610-21812	40	T4125-14261	38
T2195-25241	56	T2360-34142	179	T2395-33122	184	T2610-37453	76	T4125-38151	77
T2195-26102	45	T2360-37081	81	T2395-33132	184	T2610-37453	85	T4125-70261	138
T2195-26103	45	T2391-69071	198	T2395-68111	238	T2610-39202	90	T4125-70511	252
T2195-26511	45	T2391-82001	194	T2395-68121	238	T2610-39212	90	T4125-70521	252

https://tractormanualz.com/

PART NO.	PAGE	PART NO.	PAGE	PART NO.	PAGE	PART NO.	PAGE	PART NO.	PAGE
T4144-75952	111	T4520-88401	186	T4625-55441	237	T4681-90911	191	T4815-82361	199
T4145-60582	134	T4520-88401	188	T4625-55441	239	T4682-25731002	182	T4815-87181	200
T4145-82052	237	T4520-88401	188	T4655-83121	186	T4682-25732	181	T4815-87181	249
T4145-82072	195	T4520-88401	192	T4665-12111	166	T4682-32231	100	T4815-87181002	193
T4145-82072	196	T4520-88401	197	T4665-33251	184	T4682-34142	73	T4815-88211	200
T4145-82072	240	T4520-88401	200	T4665-52451	238	T4682-34142	75	T4815-88211	248
T4145-82081	195	T4520-88401	248	T4665-52452	238	T4682-37211	73	T4815-88221	200
T4145-82081	196	T4620-21591	62	T4665-63622	67	T4682-37211	75	T4815-88221	248
T4145-82081	240	T4620-25383	52	T4665-80023	236	T4682-43132	61	T4815-89141	200
T4157-50271	134	T4620-25442	52	T4665-80024	236	T4682-43172	181	T4815-89141	248
T4157-51211	179	T4620-25452	52	T4665-80025	236	T4682-65301	207	T4815-89151	200
T4182-53191	121	T4620-37092	81	T4665-83101	186	T4682-65301	231	T4815-89151	248
T4182-53191	164	T4620-37092	81	T4665-83111	186	T4682-65311	210	T4815-89162	200
T4240-21792	40	T4620-37092	204	T4665-83201	187	T4684-31052	115	T4815-89162	248
T4240-27672	214	T4620-37092	205	T4665-83211	187	T4686-50963	73	T4815-89163	200
T4240-27743	235	T4620-37092	217	T4665-83221	187	T4686-51951	174	T4815-89163	248
T4240-27744	235	T4620-37092	217	T4665-85131	237	T4686-82431	200	T4815-89171	193
T4260-27691	215	T4620-37092	221	T4665-85141	237	T4686-82431	249	T4815-89171	200
T4260-33631	198	T4620-37092	221	T4665-85561	192	T4686-87611	239	T4815-89171	248
T4260-33631	198	T4620-37092	225	T4665-86221	237	T4688-69312	242	T4815-93211	185
T4260-38125	77	T4620-37092	225	T4665-86261	238	T4688-69321	242	T4815-93211	185
T4260-87511	170	T4620-44592	71	T4665-86572	239	T4688-69321	253	T4815-93211	186
T4340-38241	236	T4620-49371	215	T4665-88101	192	T4715-47071	203	T4815-93211	186
T4340-38241	236	T4620-50701	167	T4665-88111	192	T4715-47071	217	T4815-93211	186
T4340-87181	193	T4620-50701	167	T4665-88121	192	T4715-47071	221	T4815-93211	187
T4363-71581TP	161	T4620-50701	168	T4665-91211	247	T4715-47071	225	T4815-93211	188
T4520-26161	152	T4620-69251	198	T4668-83301	179	T4720-90081	217	T4815-93211	189
T4520-26161	153	T4620-69251	198	T4668-83301	206	T4720-90081	221	T4815-93211	191
T4520-27831	153	T4620-69331	107	T4668-85451	239	T4720-90081	225	T4815-93211	192
T4520-43071	61	T4620-69331	116	T4668-85461	239	T4810-22581	40	T4815-93211	192
T4520-43081	61	T4620-69521	84	T4670-63601	67	T4810-22581	58	T4815-93211	197
T4520-43091	61	T4620-69521	115	T4670-63602	67	T4810-45761	204	T4815-93211	201
T4520-43131	61	T4620-70221	138	T4670-95431	141	T4810-45761	217	T4815-93211	248
T4520-43141	61	T4620-70222	138	T4675-80112	246	T4810-45761	221	T4815-93311	206
T4520-43151	61	T4620-76002	78	T4675-80113	246	T4810-45761	225	T4818-83001	238
T4520-43171	61	T4620-76031	78	T4675-80114	246	T4810-47131	204	T4833-87141	195
T4520-43601	68	T4620-80681	150	T4675-80214	247	T4810-47131	217	T4833-87141	197
T4520-44081	59	T4620-80681	156	T4680-93041	250	T4810-47131	221	T4833-87141	241
T4520-44091	59	T4620-80681	172	T4680-93061	250	T4810-47131	225	T4835-66532	144
T4520-44101	59	T4620-81842	185	T4680-93211	191	T4810-55312	181	T4835-87621	186
T4520-54222	199	T4620-81842	185	T4680-93211	242	T4810-82341	244	T4835-87621	192
T4520-54222	201	T4620-81842	185	T4680-93211	253	T4810-82341	245	T4836-69251	199
T4520-54222	242	T4620-81842	186	T4681-83431	188	T4810-82352	195	T4836-69252	199
T4520-54222	243	T4620-81842	191	T4681-83431	195	T4810-82352	197	T4837-77774	92
T4520-54222	249	T4620-81842	191	T4681-83431	197	T4810-82352	240	T4837-77774	100
T4520-54222	253	T4620-81842	200	T4681-83431	241	T4810-82421	244	T4850-93051	250
T4520-82551	199	T4620-81842	248	T4681-83611	199	T4810-82421	244	T4875-85501	228
T4520-82551	242	T4620-85471TP	161	T4681-83711	193	T4810-82741	189	T4876-45162	205
T4520-82551	243	T4620-88051	186	T4681-85011	191	T4815-46791	199	T4876-45162	218
T4520-82551	253	T4624-11012	175	T4681-85321	185	T4815-67371	25	T4876-45162	222
T4520-83301	144	T4624-84411	193	T4681-85321	191	T4815-67371	26	T4876-45162	226
T4520-87402	188	T4624-84511	185	T4681-85331	185	T4815-78112	195	T4876-50251	125
T4520-87402	188	T4624-84511	191	T4681-85331	191	T4815-78112	200	T4876-50251	176
T4520-88401	185	T4625-52351	121	T4681-90911	185	T4815-78112	241	T4930-45671	73
T4520-88401	185	T4625-52351	164	T4681-90911	188	T4815-78112	248	T4930-45671	75

https://tractormanualz.com/

PART NO.	PAGE	PART NO.	PAGE	PART NO.	PAGE	PART NO.	PAGE	PART NO.	PAGE
T4930-45681	73	T5520-80391	156	T5710-55311	208	T5715-55411	119	T5810-48121	226
T4930-45681	75	T5520-80531	156	T5710-55311TP	212	T5715-55411	164	T5810-66834	209
T4930-47071	204	T5520-80531	170	T5710-59603	207	T5715-55431	119	T5810-66834	213
T4930-47071	217	T5520-80531	170	T5710-59603	231	T5715-55431	164	T5810-68812	108
T4930-47071	221	T5520-90071	217	T5710-59612	207	T5738-55291	208	T5815-14113	37
T4930-47071	225	T5520-90071	221	T5710-59612	231	T5738-55291	208	T5815-14353	35
T4930-51351	188	T5520-90071	225	T5710-59622	207	T5738-55291	212	T5815-14711	36
T4930-51361	189	T5525-50441	167	T5710-59622	231	T5738-55291	212	T5815-14753	36
T4930-66751	179	T5525-50721	125	T5710-59633	207	T5750-81091	180	T5815-14813	36
T4930-69881	92	T5525-50721	177	T5710-59633	231	T5755-28211	48	T5815-21114	38
T4930-69881	100	T5525-89411	228	T5710-69391	116	T5755-69391	107	T5815-21115	38
T4930-69881	110	T5525-89421	229	T5710-69512	113	T5755-69512	114	T5815-21116	38
T4930-69881	232	T5525-89451	229	T5710-69513	113	T5755-69522	114	T5815-21122	59
T4930-69911	193	T5525-89452	228	T5710-69522	113	T5755-69571	114	T5815-21242	43
T4930-70493	230	T5525-89452	229	T5710-69523	113	T5757-69013	117	T5815-21251	43
T4930-81321	189	T5525-89461	229	T5710-69711003	104	T5757-69014	117	T5815-21372	43
T4930-81331	189	T5525-89471	229	T5710-69711003	104	T5810-21362	43	T5815-21401	39
T4930-83082	195	T5525-89481	229	T5710-90021	228	T5810-41521	73	T5815-21411	39
T4930-83082	197	T5535-69951	99	T5710-90031	228	T5810-41521	75	T5815-21421	41
T4930-83082	240	T5535-69951	112	T5710-90032	228	T5810-48002	217	T5815-21511	41
T4931-72091	126	T5535-69961	199	T5710-A03000601	235	T5810-48003	217	T5815-21521	41
T4931-72091	176	T5535-69961	242	T5710-A03000602	235	T5810-48013	203	T5815-21531	41
T4935-52011	120	T5535-69961	243	T5710-A5022	228	T5810-48013	217	T5815-21561	41
T4935-52011	164	T5535-69961	253	T5710-A5023	228	T5810-48013	221	T5815-21571	41
T4935-54212	201	T5565-88201	206	T5710-A5031	228	T5810-48013	225	T5815-21611	41
T4935-78112	192	T5620-51661	181	T5710-A5032	228	T5810-48022	204	T5815-21621	41
T4935-78122	192	T5638-85721	105	T5710-A5083	207	T5810-48022	217	T5815-21631	41
T4938-52351	121	T5638-85721	199	T5710-A5083	231	T5810-48022	221	T5815-21641	41
T4938-52351	164	T5710-30091	217	T5715-21331	42	T5810-48022	226	T5815-21751	52
T4938-53551	121	T5710-30091	221	T5715-21341	42	T5810-48052	217	T5815-21752	52
T4938-53551	164	T5710-30091	225	T5715-21342	42	T5810-48052	221	T5815-22711	41
T5210-37311	83	T5710-32101	89	T5715-21361	42	T5810-48052	226	T5815-22721	41
T5210-42101	60	T5710-32511	89	T5715-21371	42	T5810-48053	203	T5815-23114	44
T5210-42102	60	T5710-32601	89	T5715-21372	42	T5810-48053	218	T5815-23115	44
T5210-55742	153	T5710-37121	76	T5715-21381	42	T5810-48053	221	T5815-23123	44
T5210-69741	104	T5710-37241	76	T5715-21382	42	T5810-48053	226	T5815-23161	43
T5210-69741	104	T5710-37241	85	T5715-21383	42	T5810-48062	204	T5815-23162	43
T5230-80441	115	T5710-37301	82	T5715-23152	43	T5810-48062	218	T5815-23262	44
T5245-55461	173	T5710-37302	82	T5715-26591	46	T5810-48062	222	T5815-23531	58
T5245-55462	173	T5710-37441	83	T5715-26631	47	T5810-48062	226	T5815-23712	58
T5248-52101	183	T5710-37571	82	T5715-27131	65	T5810-48072	204	T5815-23973	38
T5248-52102	183	T5710-37631	160	T5715-28222	48	T5810-48072	218	T5815-23974	38
T5250-68771	115	T5710-37961	89	T5715-28243	48	T5810-48072	222	T5815-24102	232
T5250-68771	150	T5710-39202	90	T5715-28253	48	T5810-48072	226	T5815-24103	232
T5250-68771	172	T5710-39701	90	T5715-37562	82	T5810-48082	204	T5815-24114	233
T5270-54501	244	T5710-50061	134	T5715-52411001	130	T5810-48082	218	T5815-24121	232
T5270-55172	244	T5710-51092	168	T5715-52411002	130	T5810-48082	222	T5815-24131	233
T5290-69942	244	T5710-51181	141	T5715-53471	144	T5810-48082	226	T5815-24142	232
T5310-85001012	130	T5710-51181	167	T5715-53611	149	T5810-48092	204	T5815-24151	233
T5410-48081	160	T5710-51181	167	T5715-55011	133	T5810-48092	218	T5815-24161	232
T5410-70211	138	T5710-51181	168	T5715-55021	133	T5810-48092	222	T5815-24171	38
T5520-75171	92	T5710-51181	168	T5715-55202	128	T5810-48092	226	T5815-24232	233
T5520-75171	100	T5710-51181	168	T5715-55202	129	T5810-48121	204	T5815-24651	54
T5520-75191	252	T5710-53412	144	T5715-55202	136	T5810-48121	218	T5815-24652	54
T5520-80391	138	T5710-53471	144	T5715-55203	136	T5810-48121	222	T5815-25121	52

https://tractormanualz.com/

PART NO.	PAGE	PART NO.	PAGE	PART NO.	PAGE	PART NO.	PAGE	PART NO.	PAGE
T5815-25122	52	T5815-43811	64	T5850-62041	206	T5855-50453	124	T5855-56212	143
T5815-25123	53	T5815-43821	64	T5850-62051	206	T5855-50453	177	T5855-56224	143
T5815-25213	56	T5815-43831	66	T5850-62333	139	T5855-50454	124	T5855-56232	143
T5815-25271	56	T5815-43841	64	T5850-62343	139	T5855-50454	177	T5855-56241	143
T5815-25311	53	T5815-44112	51	T5855-21121	59	T5855-50462	124	T5855-56252	143
T5815-25312	53	T5815-44211	51	T5855-41501	73	T5855-50462	177	T5855-56261	143
T5815-25313	53	T5815-44312	51	T5855-41501	75	T5855-50513	177	T5855-56613	148
T5815-25411	53	T5815-44562	57	T5855-41531	73	T5855-50514	125	T5855-56621	148
T5815-25412	53	T5815-44581	71	T5855-41532	75	T5855-50514	177	T5855-56631	148
T5815-25461	54	T5815-44582	71	T5855-41541	73	T5855-50521	124	T5855-56813	144
T5815-25811	54	T5815-44591	71	T5855-41542	75	T5855-50521002	125	T5855-56822	144
T5815-25812	54	T5815-44592	71	T5855-42031	75	T5855-50521002	177	T5855-57012	205
T5815-26551	46	T5815-44691	57	T5855-43015	83	T5855-50522	177	T5855-57012	218
T5815-26561	46	T5815-45201	67	T5855-43016	84	T5855-50522001	125	T5855-57012	222
T5815-26682	47	T5815-49281	214	T5855-43017	84	T5855-50522001	177	T5855-57012	226
T5815-26711	49	T5815-49401	214	T5855-43018	84	T5855-50532	177	T5855-57022	205
T5815-26721	49	T5815-49451	214	T5855-43019	84	T5855-50542	168	T5855-57022	218
T5815-26831	49	T5815-55213	153	T5855-43021	76	T5855-50552	124	T5855-57022	222
T5815-26832	49	T5815-55222	153	T5855-43021	85	T5855-50552	178	T5855-57022	226
T5815-27112	49	T5815-55232	153	T5855-43031	76	T5855-50562	125	T5855-57215	141
T5815-27113	49	T5815-55243	153	T5855-43031	85	T5855-50562	178	T5855-57235	141
T5815-27131	49	T5815-55291	153	T5855-43042	76	T5855-50571	125	T5855-57411	151
T5815-27361	50	T5815-55615	152	T5855-43042	85	T5855-50571	178	T5855-57612	149
T5815-28132	50	T5815-55813	180	T5855-43051	76	T5855-50581	126	T5855-57613	149
T5815-28133	50	T5815-55814	180	T5855-43051	85	T5855-50581	178	T5855-57632	149
T5815-28134	50	T5815-55824	180	T5855-43061	76	T5855-51215	135	T5855-57804	145
T5815-28142	50	T5815-55825	180	T5855-43061	85	T5855-51216	135	T5855-57805	146
T5815-28143	50	T5815-55826	180	T5855-43071	76	T5855-51217	135	T5855-57812	146
T5815-28144	50	T5815-55853	180	T5855-43071	85	T5855-51218	135	T5855-57813	146
T5815-28271	48	T5815-56413	142	T5855-43072	85	T5855-51815	168	T5855-57822	146
T5815-28281	48	T5815-56422	142	T5855-43082	76	T5855-51816	168	T5855-57832	146
T5815-41621	69	T5815-57204	141	T5855-43082	85	T5855-51816OE	168	T5855-57842	146
T5815-41631	68	T5815-57224	141	T5855-43502	89	T5855-51817OE	168	T5855-57853	146
T5815-41632	68	T5815-62314	138	T5855-44003	90	T5855-51852	169	T5855-57864	146
T5815-42143	60	T5815-62315	138	T5855-44012	90	T5855-51861	169	T5855-57865	146
T5815-42144	60	T5815-62316	138	T5855-46002	77	T5855-51881	169	T5855-57866	146
T5815-42145	60	T5815-62316OE	138	T5855-46003	77	T5855-51881	209	T5855-57874	146
T5815-42211	62	T5815-62317	138	T5855-46502	77	T5855-51881	213	T5855-57875	147
T5815-42212	63	T5815-65312	250	T5855-47014	81	T5855-52013	134	T5855-57881	146
T5815-43201	62	T5815-65321	250	T5855-47042	81	T5855-52014	134	T5855-57882	146
T5815-43202	62	T5815-65332	250	T5855-47091	81	T5855-52021	134	T5855-57901	146
T5815-43211	63	T5815-65341	250	T5855-47091	203	T5855-52032	134	T5855-57912	146
T5815-43212	63	T5816-41512	73	T5855-47091	218	T5855-52033	134	T5855-58411	233
T5815-43442	64	T5816-41512	75	T5855-47091	222	T5855-52213	182	T5855-58422	233
T5815-43443	64	T5817-48002	222	T5855-47091	226	T5855-52223	182	T5855-58433	234
T5815-43461	65	T5818-51051	168	T5855-47091001	203	T5855-52233	182	T5855-58441	234
T5815-43611	70	T5818-51061	168	T5855-50012	123	T5855-55271	154	T5855-58451	234
T5815-43612	70	T5818-51851	168	T5855-50012	175	T5855-55412	172	T5855-58461	233
T5815-43621	70	T5818-55832	180	T5855-50411	124	T5855-55425	150	T5855-60003	155
T5815-43631	65	T5818-55833	180	T5855-50411	176	T5855-55425	172	T5855-60012	155
T5815-43632	66	T5818-55834	180	T5855-50421	124	T5855-55431	150	T5855-60023	155
T5815-43641	66	T5850-51851	168	T5855-50421	176	T5855-55431	172	T5855-60034	155
T5815-43642	66	T5850-55811	179	T5855-50431	176	T5855-55623	152	T5855-60044	155
T5815-43651	66	T5850-55812	179	T5855-50441	124	T5855-55643	152	T5855-60045	155
T5815-43661	70	T5850-55812	180	T5855-50441	177	T5855-55863	180	T5855-60046	155

https://tractormanualz.com/

PART NO.	PAGE	PART NO.	PAGE	PART NO.	PAGE	PART NO.	PAGE	PART NO.	PAGE
T5855-60047	156	T5855-67441	165	TB16-0127B	210	TC24-0241B	203	TC26-0001A	182
T5855-60053	156	T5855-69061	101	TB16-0127B	213	TC24-A0004C	216	TC26-0007B	140
T5855-60515	157	T5855-69162	97	TB25-0003A	199	TC24-A0004D	216	TC26-0015A	159
T5855-60516	157	T5855-69212	109	TB25-0003B	199	TC24-A0004E	216	TC26-0032A	160
T5855-60542	157	T5855-69612	97	TB25-0009A	102	TC24-A0004F	216	TC26-0040A	156
T5855-61114	130	T5855-69711	103	TB25-0010A	102	TC24-A0004G	216	TC26-0040B	156
T5855-61114	131	T5855-69712	103	TB35-A0005A	244	TC24-A0004K	216	TC26-0065C	130
T5855-61403	170	T5855-69713	103	TC22-0010A	59	TC24-A0004L	216	TC26-0065D	130
T5855-61404	170	T5855-69721	103	TC22-0011A	59	TC24-A0005C	220	TC26-0068A	160
T5855-61405OE	170	T5855-69722	103	TC22-0012A	58	TC24-A0005D	220	TC26-0069A	160
T5855-61413	170	T5855-69723	103	TC22-0013A	58	TC24-A0005E	220	TC26-0070A	206
T5855-61414	171	T5855-90802	256	TC22-0015A	57	TC24-A0005F	220	TC26-0070B	206
T5855-61415	171	T5855-95011	230	TC22-0016A	57	TC24-A0005G	220	TC26-0071A	206
T5855-61416	171	T5855-A3001	214	TC22-0019A	53	TC24-A0005K	220	TC26-0071B	206
T5855-61417OE	171	T5855-A3021	202	TC22-0022A	59	TC24-A0005L	220	TC26-0077B	130
T5855-61713	171	T5855-A5004	232	TC24-0002C	78	TC24-A0005M	220	TC26-0082A	157
T5855-61714	171	T5855-A5005	232	TC24-0008A	77	TC24-A0006C	224	TC26-0085C	182
T5855-61723	171	T5855-A5006	232	TC24-0008B	77	TC24-A0006D	224	TC26-0085D	182
T5855-61724	171	T5855-A5101	230	TC24-0012C	81	TC24-A0006E	224	TC26-0086A	146
T5855-61732	171	T5855-A5201	250	TC24-0012D	81	TC24-A0006F	224	TC26-0095A	146
T5855-62014	139	T5857-47032	81	TC24-0019A	78	TC24-A0006G	224	TC26-0114A	166
T5855-62015	139	T5857-48522	205	TC24-0019A-KA	79	TC24-A0006H	224	TC26-0116A	123
T5855-62051	87	T5857-48522	218	TC24-0020A	226	TC24-A0006I	224	TC26-0116A	175
T5855-62051	139	T5857-48522	222	TC24-0020B	203	TC24-A0006J	224	TC26-0117A	125
T5855-62324	139	T5857-48522	226	TC24-0020B	226	TC24-A0006K	224	TC26-0117A	178
T5855-62325	139	T5857-69422	115	TC24-0038A	81	TC24-A0006L	224	TC26-0118A	182
T5855-62326	139	T5858-50421	125	TC24-0043A	91	TC24-A0006M	224	TC26-0154A	197
T5855-62326OE	139	T5858-50421	178	TC24-0075A	205	TC24-A0006N	224	TC26-0155A	197
T5855-62327	139	T5858-50471	124	TC24-0075A	218	TC24-A0022A	203	TC26-0301A	141
T5855-62335	139	T5858-50471	178	TC24-0075A	222	TC24-A0022C	203	TC26-0305A	146
T5855-62336	139	T5858-50481	124	TC24-0075A	226	TC24-A0022D	203	TC26-0338A	166
T5855-62346	139	T5858-50481	178	TC24-0076A	205	TC24-A0025A	74	TC26-0382A	253
T5855-62347	139	T5858-51842	169	TC24-0076A	218	TC25-0001B	115	TC26-0383A	195
T5855-62348	139	T5858-51852	168	TC24-0076A	222	TC25-0001C	115	TC26-0383A	197
T5855-62353	139	T5858-51862	169	TC24-0076A	227	TC25-0001D	115	TC26-0383A	241
T5855-62363	139	T5858-51872	169	TC24-0078A	203	TC25-0001E	115	TC26-0384A	197
T5855-62402	139	T5858-51882	169	TC24-0078A	217	TC25-0002B	112	TC26-0388A	121
T5855-65014	88	T5858-51894	169	TC24-0078A	221	TC25-0059A	118	TC26-0388A	164
T5855-65032	161	T5858-52211	182	TC24-0078A	226	TC25-0059B	118	TC26-0425C	135
T5855-65042	161	T5858-52232	182	TC24-0138A	81	TC25-0059C	108	TC26-0425D	135
T5855-65051	161	T5858-52242	182	TC24-0164A	85	TC25-0059C	118	TC26-0425E	135
T5855-65061	161	T5858-52252	182	TC24-0197A	85	TC25-0061A	117	TC26-0943B	208
T5855-65072	161	TB13-0004A	67	TC24-0217A	226	TC25-0061B	117	TC26-0943B	212
T5855-65312	158	TB15-0001A	199	TC24-0238A	81	TC25-0061C	117	TC26-0943C	208
T5855-65351TP	159	TB15-0007A	99	TC24-0238A	81	TC25-0078A	115	TC26-0943C	212
T5855-65913	162	TB15-0007A	112	TC24-0238A	204	TC25-0078B	115	TC26-0947B	208
T5855-66812	128	TB15-0024A	199	TC24-0238A	205	TC25-0080A	104	TC26-0947B	212
T5855-66813	128	TB16-0003A	119	TC24-0238A	217	TC25-0081A	104	TC26-0947C	208
T5855-66832	128	TB16-0003A	165	TC24-0238A	217	TC25-0099A	209	TC26-0947C	212
T5855-66833	128	TB16-0012A	195	TC24-0238A	221	TC25-0103A	109	TC26-0948A	209
T5855-67422	121	TB16-0012B	195	TC24-0238A	221	TC25-0103B	109	TC26-0948A	213
T5855-67422	165	TB16-0012C	195	TC24-0238A	225	TC25-0103C	109	TC26-0948B	209
T5855-67431	121	TB16-0070A	238	TC24-0238A	225	TC25-0122B	92	TC26-0948B	213
T5855-67431	165	TB16-0071A	238	TC24-0239A	81	TC25-0122B	100	TC26-1090A	205
T5855-67441	121	TB16-0090A	246	TC24-0241A	203	TC26-0001A	178	TC26-1090A	218

https://tractormanualz.com/

PART NO.	PAGE	PART NO.	PAGE	PART NO.	PAGE	PART NO.	PAGE	PART NO.	PAGE
TC26-1090A	222	TC26-1791A	211	TG16-1530B	122				
TC26-1090A	227	TC26-1791A	211	TG16-1540A	122				
TC26-1091A	205	TC26-1792A	132	TG35-0114A	252				
TC26-1091A	218	TC26-1794A	127	TG35-0136A	92				
TC26-1091A	222	TC26-1794B	127	TG36-1251A	237				
TC26-1091A	227	TC26-1800A	124	U3210-06204	233				
TC26-1187B	212	TC26-1800A	176	U3215-14601	46				
TC26-1296A	160	TC26-1801A	167	U3215-14611	46				
TC26-1297A	158	TC26-1834A	132	U3215-14621	46				
TC26-1315A	209	TC26-1865A	123	U3215-77501	126				
TC26-1315A	213	TC26-1869A	123	U3215-77501	178				
TC26-1443A	163	TC26-1945A	123						
TC26-1493A	128	TC26-A0001B	256						
TC26-1497A	129	TC26-A0002A	257						
TC26-1497A	136	TC26-A0004C	255						
TC26-1497B	136	TC26-A0006A	254						
TC26-1498A	129	TC26-A0010B	206						
TC26-1498A	136	TC26-A0060A	212						
TC26-1498B	136	TC26-A0060B	212						
TC26-1563A	120	TC26-A0060C	212						
TC26-1563B	120	TC26-A0092A	208						
TC26-1569A	208	TC26-A0092B	208						
TC26-1570A	210	TC26-A0092C	208						
TC26-1573A	210	TC26-A0092D	208						
TC26-1614A	163	TC26-A0113A	211						
TC26-1615A	126	TC26-A0114A	211						
TC26-1615A	177	TD24-0008A	86						
TC26-1624A	177	TD24-0159A	204						
TC26-1689A	133	TD24-0159A	218						
TC26-1690A	133	TD24-0159A	222						
TC26-1717B	136	TD24-0159A	227						
TC26-1718A	131	TD25-0015A	199						
TC26-1718B	131	TD25-0052A	209						
TC26-1718C	131	TD26-1009B	122						
TC26-1734A	131	TD26-1146A	132						
TC26-1735A	131	TF14-0122A	204						
TC26-1739A	115	TF14-0122A	218						
TC26-1769A	131	TF14-0122A	222						
TC26-1769B	131	TF14-0122A	227						
TC26-1772A	131	TF14-0123A	204						
TC26-1773A	131	TF14-0123A	219						
TC26-1774A	131	TF14-0123A	223						
TC26-1774B	131	TF14-0123A	227						
TC26-1776A	131	TF15-0001A	244						
TC26-1778A	131	TF15-0002C	244						
TC26-1780A	132	TG14-0137A	84						
TC26-1781A	132	TG15-0046A	244						
TC26-1782A	211	TG15-0047A	244						
TC26-1783A	211	TG15-0048A	244						
TC26-1784A	132	TG15-0243A	200						
TC26-1786A	132	TG15-0243A	248						
TC26-1787A	132	TG16-0379A	237						
TC26-1788A	132	TG16-0800A	154						
TC26-1789A	132	TG16-1530A	121						
TC26-1790A	132	TG16-1530A	122						

https://tractormanualz.com/

INDEX 2

https://tractormanualz.com/

PARTS GROUP	GROUP NO.	PAGE
<CABIN>		
DOOR GROUP	CK20C-T2130A	188
ELECTRICAL PARTS GROUP	TB1-G216002	198
FRONT GLASS GROUP	TB110C-T2120A	185
MOUNTING GROUP	TB110C-T2110A	184
REAR GLASS GROUP	TB110C-T2140A	191
ROOF GROUP	TB1-G6C2502	194
ROOF GROUP	TC2-G6C2503	196
WIPER MOTOR GROUP	CK30C-T2170A	193
WIPER(REAR) GROUP(OPTION)	TC2-G223002	200
<CHASSIS>		
ACCELERATOR LEVER GROUP	TC2-G648102	179
AIR CLEANER GROUP	TC2-G611017	123
AIR CLEANER GROUP	TC2-G611006	175
BATTERY FIXING GROUP	TC2-G617001	134
BONNET GROUP	TC2-G615506	167
BRAKE LOCK GROUP	TC2-G646602	172
BRAKE PEDAL GROUP	TC2-G646502	153
CHECK LINK GROUP	TC2-G682005	159
CLUTCH PEDAL GROUP	TC2-G646001	152
DIFFERENTIAL PEDAL GROUP	TC2-G645501	151
DRAWBAR GROUP	TC2-G692010	162
FENDER(ROPS) GROUP	TC2-G635003	170
FRONT AXLE FRAME GROUP	TC2-G621002	135
FRONT AXLE FRAME GROUP(OS)	TC2-G621006	127
FRONT WHEEL DRIVE LEVER GROUP	TC2-G644501	149
FUEL TANK GROUP	TC2-G671003	181
INSTRUMENT COVER GROUP	TC2-G655003	157
JOYSTICK LEVER GROUP	TC2-G642001	145
LABEL GROUP(LK2610)	TC2-G6D5024	164
LABEL(BONNET COVER) GROUP	TC2-G6D1019	119
LABEL(FRAME) GROUP	TC2-G6D4002	183
LABEL(MAIN/ETC) GROUP	TC2-G6D3007	121
LABEL(MFG CERTIFICATE) GROUP	TC2-G6D2002	120
LEVER GUIDE(CAB) GROUP	TC2-G637001	141
LIFT ROD GROUP	TC2-G684003	161
LOWER LINK GROUP	TC2-G681004	158
MAIN SHIFT LEVER GROUP	TC2-G640101	142
MUFFLER GROUP	TC2-G612005	166
PARKING BRAKE LEVER GROUP	TC2-G645001	150
POSITION DRAFT CONTROL LEVER GROU	TC2-G641001	144
PTO LEVER GROUP	TC2-G643001	148
PTO SHAFT COVER GROUP	TC2-G695004	133
RADIATOR GROUP	TC2-G612515	124
RADIATOR GROUP	TC2-G612503	176
RANGE SHIFT LEVER GROUP	TC2-G640502	143
REFLECTOR GROUP	TC2-G6F6501	163
ROPS BAR GROUP	TC2-G631002	128
ROPS BAR GROUP	TC2-G631007	129
ROPS BAR GROUP	TC2-G631011	136
SEAT GROUP	TC2-G661005	130
SEAT GROUP	TC2-G661022	131
STEERING COLUMN GROUP	TC2-G653004	155
STEERING WHEEL GROUP	TC2-G651002	173
STEP MAT GROUP	TC2-G662010	174
STEP SEAT FRAME GROUP	TC2-G633001	137
TOP LINK GROUP	TC2-G683002	160
<ELECTRICAL>		
ALTERNATOR GROUP	TC2-G514002	98
BATTERY GROUP	TC2-G513501	97
DISPLAY CONTROL GROUP	TC2-G533024	108
DISPLAY CONTROL GROUP	TC2-G533003	117
DISPLAY CONTROL GROUP	TC2-G533018	118
ENGINE ELECTRICAL GROUP(3)	TC2-G512001	93
ENGINE ELECTRICAL GROUP(4)	TC2-G512501	94
FUEL SENDER GROUP	TC2-G533501	109
GLOW CONTROL GROUP	TC2-G514504	99
GLOW CONTROL GROUP	TC2-G514503	112
HEAD LAMP WIRE HARNESS GROUP	TC2-G532502	107
HEAD LAMP WIRE HARNESS GROUP	TC2-G532501	116
HEAD LIGHT GROUP	TC2-G521001	113
HEAD LIGHT GROUP	TC2-G521002	114
HORN GROUP	TC2-G534501	111
LIGHT CONTROL GROUP	TC2-G525003	106
PTO CONTROL GROUP	TC2-G534003	110
REAR COMBINATION LAMP GROUP	TC2-G522501	103
REAR COMBINATION LAMP GROUP	TC2-G522502	104
REFLECTOR GROUP	TC2-G524004	105
START CONTROL GROUP	TC2-G515024	92
START CONTROL GROUP	TC2-G515013	100
STARTER MOTOR GROUP	TC2-G513001	95
STARTER MOTOR GROUP	TC2-G513002	96
TURN SIGNAL LAMP GROUP	TC2-G522001	101
TURN SIGNAL LAMP GROUP	TC2-G522002	102
WIRE HARNESS GROUP	TC2-G531016	115
<ENGINE>		
	EA4-G125001	7
CAMSHAFT GROUP	EA4-G123001	5
CAMSHAFT GROUP	3A165LW-E100	19
COOLING FAN GROUP	TC2-G112010	10
COOLING FAN GROUP	EA1-G125002	32
CRANK SHAFT GROUP	EA1-G121004	1
CYLINDER BLOCK GROUP	3A165LX-E010	12
CYLINDER HEAD COVER GROUP	EA1-G116002	18
CYLINDER HEAD GROUP	EA1-G103002	14
ENGINE LABEL GROUP	TC2-G118009	11
ENGINE STOP LEVER GROUP	4B243LW-E160	27
EPA LABEL GROUP	EA1-G132004	34

https://tractormanualz.com/

PARTS GROUP	GROUP NO.	PAGE	PARTS GROUP	GROUP NO.	PAGE
EXHAUST MANIFOLD GROUP	EA1-G121002	33	ARM REST GROUP (OPTION)	TC2-G664002	256
FLYWHEEL GROUP	EA1-G124003	20	ARM REST GROUP(OPTION)	TC2-G6G4101	211
FUEL CAMSHAFT GROUP	3A150LW-E140	21	CABIN GROUP	TB110C-T2100A	236
FUEL EQUIPMENT GROUP	EA1-G111502	25	CD PLAYER GROUP(OPTION)	CK30C-T2200A	244
FUEL EQUIPMENT GROUP	EA1-G151002	26	DOUBLE ACTING VALVE GROUP	TC2-G446021	203
GEAR CASE GROUP	3B183-E040	15	DOUBLE ACTING VALVE GROUP	TC2-G446008	224
GOVERNOR GROUP	EA1-G113502	29	DOUBLE ACTING VALVE GROUP (DETENT)	TC2-G446007	220
IDLE GEAR GROUP	EA4-G124001	6	DOUBLE ACTING VALVE GROUP (SPRING)	TC2-G446006	216
INTAKE MANIFOLD GROUP	EA1-G131002	3	FRONT ROPS GROUP(OPT.-US)	TC2-G6G3301	208
MAIN BEARING CASE GROUP	EA4-G112001	4	FRONT ROPS GROUP(OPTION)	TC2-G632002	212
OIL GAUGE GROUP	EA4-G143003	9	FRONT WEIGHT GROUP	TC2-G6A2002	228
OIL PAN GROUP	EA4-G142002	8	Interior material group(option)	TB1100C-T2210A	246
PISTON_CONNECTING ROD GROUP	EA1-G122002	2	LAMP GROUP(OPTION)	CK30C-T2180A	242
SPEED CONTROL LEVER GROUP	3B183-E150	23	LIFT ROD GROUP (OPTION)	TC2-G684002	257
WATER FLANGE GROUP	EA1-G114002	31	LOWER LINK GROUP(OPTION)	TC2-G6G2401	250
WATER PUMP GROUP	3A165SV-E180	30	MID PTO LEVER GROUP	TC2-G643403	232
<FRONT AXLE>			OPTIONAL LAMP GROUP	TC2-G591002	253
BEVEL GEAR CASE GROUP	TC2-G314003	64	REAR VIEW MIRROR GROUP	TC2-G6F4503	206
BEVEL PINION SHAFT GROUP	TC2-G313001	62	REAR WEIGHT GROUP	TC2-G6A3001	235
FRONT AXLE BRACKET GROUP	TC2-G332001	68	REAR WIPER GROUP(OPTION)	CK30C-T2230A	248
FRONT AXLE CASE GROUP	TC2-G316003	65	ROOF GROUP	CK20HC-T2150A	240
FRONT AXLE GROUP	TC2-G317005	70	STEP MAT GROUP (OPTION)	TC2-G662002	255
FRONT AXLE SUPPORT GROUP	TC2-G311003	60	SUNSHADE GROUP	TC2-G6G1001	207
FRONT DIFF SYSTEM GROUP	TC2-G312001	61	SUNSHADE GROUP	TC2-G637506	231
FRONT WHEEL DRIVE SHAFT GROUP	TC2-G2B1006	57	TIRE GROUP(OPTION)	TC2-G2M1002	202
FRONT WHEEL GROUP	TC2-G341007	72	TIRE GROUP(OPTION)	TC2-G2M1001	214
PROPELLER SHAFT GROUP	TC2-G331001	71	TOOL BOX GROUP	TC2-G6F2001	230
RANGE SHAFT GROUP	TC2-G271003	58	WORKING LAMP GROUP(OPTION)	CK30C-T2190A	243
SPIRAL BEVEL PINION SHAFT GROUP	TC2-G281003	59	**<TRANSMISSION>**		
STEERING CYLINDER GROUP	TC2-G321001	67	BRAKE GROUP	TC2-G293001	48
<HYDRAULIC>			CLUTCH GROUP	TC2-G211001	35
	TC2-G446024	74	CLUTCH HOUSING GROUP	TC2-G222001	37
AIR BREATHER GROUP	TC2-G466501	91	CLUTCH RELEASE GROUP	TC2-G212003	36
DOWN SPEED CONTROL GROUP	TC2-G464001	87	DRIVE SHAFT GROUP	TC2-G232003	39
GEAR PUMP GROUP(T3)	TC2-G412003	78	FRONT WHEEL DRIVE FORK GROUP	TC2-G2B2001	51
HYDRAULIC CYLINDER GROUP	TC2-G463005	83	MAIN SHIFT FORK GROUP	TC2-G242001	42
HYDRAULIC SYSTEM GROUP(1)	TC2-G465501	89	MAIN SHIFT SHAFT GROUP	TC2-G241001	40
HYDRAULIC SYSTEM GROUP(2)	TC2-G466001	90	PTO INPUT SHAFT GROUP	TC2-G2C1001	56
JOYSTICK VALVE GROUP(T3)	TC2-G441006	80	PTO SHAFT GROUP	TC2-G2C4006	52
LIFT CONTROL VALVE(MEC) GROUP	TC2-G461001	82	PTO SHIFT FORK GROUP	TC2-G2C5001	54
LIFT CYLINDER GROUP	TC2-G463501	76	RANGE SHIFT FORK GROUP	TC2-G272001	44
LIFT CYLINDER GROUP	TC2-G463502	85	REAR AXLE GROUP	TC2-G2A1001	49
POWER STEERING UNIT GROUP	TC2-G431021	73	REAR DIFF LOCK GROUP	TC2-G283003	47
POWER STEERING UNIT GROUP	TC2-G431002	75	REAR DIFFERENTIAL GROUP	TC2-G282001	45
SUCTION LINE GROUP	TC2-G411005	77	REAR WHEEL GROUP	TC2-G2G1003	55
TOP LINK DEVICE GROUP	TC2-G464501	88	TRANSMISSION CASE GROUP	TC2-G224005	38
<OPTION>					
ACCESSORIES_SERVICE PARTS GROUP	TC2-G6F9007	252			
AIR CLEANER GROUP (OPTION)	TC2-G611002	254			

https://tractormanualz.com/