TABLE OF CONTENTS

[ENGINE]

EF2-G102001	OIL PAN GROUP	1
EF2-G103001	CYLINDER HEAD GROUP	2
EF2-G104501	GEAR CASE COVER GROUP	3
EF2-G109001	CAMSHAFT GROUP	4
EF2-G110001	IDLE GEAR GROUP	5
EF2-G111001	ROCKER ARM_VALVE GROUP	7
EF2-G115001	WATER PUMP GROUP	8
EF2-G119001	EGR GROUP	9
EF2-G122003	EGR COOLER GROUP	10
EF2-G130001	ECU GROUP	11
EF3-G101001	CYLINDER BLOCK GROUP	12
EF3-G102503	OIL GAUGE GROUP	14
EF3-G104001	GEAR CASE GROUP	15
EF3-G105001	OIL FILTER GROUP	17
EF3-G106001	CRANK SHAFT GROUP	18
EF3-G107001	PISTON_CONNECTING ROD GROUP	20
EF3-G111501	FUEL EQUIPMENT GROUP	21
EF3-G114001	WATER FLANGE GROUP	22
EF3-G116003	CYLINDER HEAD COVER GROUP	23
EF3-G117005	FUEL HOSE GROUP	24
EF3-G118004	INTAKE MANIFOLD GROUP	25
EF3-G121001	EXHAUST MANIFOLD GROUP	26
EF3-G122501	REAR PLATE GROUP	27
EF3-G124002	FLYWHEEL GROUP	28
EF3-G129001	AFTER TREATMENT GROUP	29
EF3-G133001	LABEL GROUP	30
EF3-G133501	ELECTRICAL PARTS GROUP	31
EH3-G181005	LABEL GROUP	32
TC2-G118008	ENGINE LABEL GROUP	33
EF3-G120001	INTAKE HOSE GROUP	34
EF3-G125002	COOLING FAN GROUP	35
EF3-G126001	COOLING FAN(CAB) GROUP	36
EF3-G132002	EPA LABEL GROUP	37

[STAGE5]

https://tractormanualz.com/

EH3-G111001	CYLINDER BLOCK GROUP	38
EH3-G113001	CYLINDER HEAD GROUP	39
EH3-G114001	GEAR CASE GROUP	40
EH3-G115001	GEAR CASE COVER GROUP	42
EH3-G116001	CYLINDER HEAD COVER GROUP	43
EH3-G118001	REAR PLATE GROUP	44
EH3-G121001	CRANK SHAFT GROUP	45
EH3-G122001	PISTON_CONNECTING ROD GROUP	46
EH3-G123001	CAMSHAFT GROUP	47
EH3-G124001	IDLE GEAR GROUP	48
EH3-G125001	ROCKER ARM_VALVE GROUP	49
EH3-G126001	FLYWHEEL GROUP	50
EH3-G127001	CRANK SHAFT FULLEY GROUP	51
EH3-G131001	INTAKE MANIFOLD GROUP	52
EH3-G132001	INTAKE HOSE GROUP	53
EH3-G133001	EXHAUST MANIFOLD GROUP	54
EH3-G141001	OIL PUMP GROUP	55
EH3-G142001	OIL PAN GROUP	56
EH3-G143001	OIL GAUGE GROUP	57
EH3-G144001	OIL FILTER GROUP	58
EH3-G151001	FUEL EQUIPMENT GROUP	59
EH3-G162001	WATER FLANGE GROUP	61
EH3-G163001	WATER PUMP GROUP	62
EH3-G171001	EGR GROUP	63
EH3-G172001	EGR COOLER GROUP	64
EH3-G191001	GLOW PLUG GROUP	65
TC2-G112003	COOLING FAN GROUP	66
TC2-G115001	AFTERTREATMENT GROUP	67
TC2-G117005	FUEL FILTER GROUP	68
TC2-G118002	MANUFACTURING LABEL GROUP	70
TC2-G119001	ECU GROUP	71

[TRANSMISSION]

TC2-G271006	RANGE SHIFT SHAFT GROUP	72
TC2-G331004	PROPELLER SHAFT GROUP	73
TC2-G272001	RANGE SHIFT FORK GROUP	74
TC2-G282001	REAR DIFFERENTIAL GROUP	75

https://tractormanualz.com/

TC2-G283003	REAR DIFF LOCK GROUP	77
TC2-G2B1003	FRONT WHEEL DRIVE SHAFT GROUP	78
TC2-G293003	BRAKE GROUP	80
TC2-G2A1001	REAR AXLE GROUP	81
TC2-G2B2001	FRONT WHEEL DRIVE FORK GROUP	83
TC2-G2C4007	PTO SHAFT GROUP	84
TC2-G2C5003	PTO SHIFT FORK GROUP	85
TC2-G2G1003	REAR WHEEL GROUP	86
TC2-G2C1003	PTO INPUT SHAFT GROUP	87
TC2-G2C3003	PTO CLUTCH GROUP	88
TC2-G211005	CLUTCH GROUP	90
TC2-G212008	CLUTCH RELEASE GROUP	91
TC2-G221001	FRONT COVER GORUP	92
TC2-G222007	CLUTCH HOUSING GROUP	93
TC2-G224011	TRANSMISSION CASE GROUP	94
TC2-G241002	MAIN SHIFT SHAFT GROUP	95
TC2-G242002	MAIN SHIFT FORK GROUP	97
TC2-G251002	SHUTTLE SHAFT GROUP	99
TC2-G252002	SHUTTLE SHIFT FORK GROUP	101
TC2-G281005	SPIRAL BEVEL GEAR GROUP	102

[FRONT AXLE]

TC2-G311003	FRONT AXLE SUPPORT GROUP	103
TC2-G312001	FRONT DIFF SYSTEM GROUP	104
TC2-G313001	BEVEL PINION SHAFT GROUP	105
TC2-G314003	BEVEL GEAR CASE GROUP	107
TC2-G316003	FRONT AXLE CASE GROUP	108
TC2-G321001	STEERING CYLINDER GROUP	110
TC2-G332001	FRONT AXLE BRACKET GROUP	111
TC2-G317005	FRONT AXLE GROUP	112
TC2-G341007	FRONT WHEEL GROUP	113

[HYDRAULIC]

TC2-G431015	POWER STEERING UNIT GROUP	114
TC2-G442012	EXTERNAL HYDRAULIC VALVE GROUP(DS)	116
TC2-G421002	MODULATE VALVE GROUP	118
TC2-G464505	TOP LINK DEVICE GROUP	119

https://tractormanualz.com/

TC2-G411004	SUCTION LINE GROUP	120
TC2-G412002	GEAR PUMP GROUP	121
TC2-G441008	JOYSTICK VALVE GROUP	122
TC2-G442006	EXTERNAL HYDRAULIC VALVE GROUP(DS)	124
TC2-G446014	EXTERNAL HYDRAULIC VALVE GROUP(OPT-US)	127
TC2-G461001	LIFT CONTROL VALVE(MEC) GROUP	128
TC2-G463011	HYDRAULIC CYLINDER GROUP	129
TC2-G463503	LIFT CYLINDER GROUP	131
TC2-G464002	DOWN SPEED CONTROL GROUP	132
TC2-G465501	HYDRAULIC SYSTEM GROUP(1)	133
TC2-G466004	HYDRAULIC SYSTEM GROUP	134
TC2-G466501	AIR BREATHER GROUP	135

[ELECTRICAL]

TC2-G511003	ENGINE ELECTRICAL GROUP(1)	136
TC2-G511502	ENGINE ELECTRICAL GROUP(2)	137
TC2-G511503	ENGINE ELECTRICAL GROUP(2)	138
TC2-G515009	START CONTROL GROUP	139
TC2-G531030	WIRE HARNESS GROUP	140
TC2-G533020	DISPLAY CONTROL GROUP	142
TC2-G534007	PTO CONTROL GROUP	143
TC2-G512001	ENGINE ELECTRICAL GROUP(3)	144
TC2-G513001	STARTER MOTOR GROUP	145
TC2-G513002	STARTER MOTOR GROUP	146
TC2-G513501	BATTERY GROUP	147
TC2-G514001	ALTERNATOR GROUP	148
TC2-G514501	GLOW CONTROL GROUP	149
TC2-G516002	FUEL HEATER GROUP(WIRE)	150
TC2-G522002	TURN SIGNAL LAMP GROUP	151
TC2-G522502	REAR COMBINATION LAMP GROUP	152
TC2-G524004	REFLECTOR GROUP	153
TC2-G525004	LIGHT CONTROL GROUP	154
TC2-G527001	POWER SOCKET GROUP	155
TC2-G533501	FUEL SENDER GROUP	156
TC2-G534501	HORN GROUP	157
TC2-G535001	TIER4 CONTROL GROUP	158
TC2-G511001	ENGINE ELECTRICAL GROUP(1)	159

https://tractormanualz.com/

TC2-G511501	ENGINE ELECTRICAL GROUP(2)	160
TC2-G515004	START CONTROL GROUP	161
TC2-G521001	HEAD LIGHT GROUP	162
TC2-G532501	HEAD LAMP WIRE HARNESS GROUP	163
TC2-G533010	DISPLAY CONTROL GROUP	164

[CHASSIS]

TC2-G6D1040	LABEL(BONNET COVER) GROUP(35HP MEC IND.P	165
TC2-G6D2002	LABEL(MFG CERTIFICATE) GROUP	166
TC2-G6D3039	LABEL(MAIN/ETC) GROUP	167
TC2-G6F4004	DUST SHIELD PLATE GROUP	169
TC2-G611018	AIR CLEANER GROUP	170
TC2-G612603	DUSTPROOF NET GROUP	171
TC2-G621007	FRONT AXLE FRAME GROUP(OS)	172
TC2-G631006	ROPS BAR GROUP(TELESCOPIC CHECK LINK)	173
TC2-G633027	STEP SEAT FRAME GROUP(MEC)	175
TC2-G635008	FENDER(ROPS) GROUP(IND.PTO)	177
TC2-G644001	SHUTTLE LEVER GROUP	179
TC2-G652012	INSTRUMENT PANEL FRAME GROUP(ROPS SHUTTL	180
TC2-G661023	SEAT GROUP	181
TC2-G611010	AIR CLEANER GROUP	183
TC2-G612006	MUFFLER GROUP	184
TC2-G612601	DUSTPROOF NET GROUP	185
TC2-G612701	COOLANT RESERVIOR GROUP	186
TC2-G614505	FUEL COOLER GROUP(TC220 STAGE5)	187
TC2-G617002	BATTERY FIXING GROUP	188
TC2-G617201	ECU BRACKET GROUP	189
TC2-G621003	FRONT AXLE FRAME GROUP	190
TC2-G642003	JOYSTICK LEVER GROUP	191
TC2-G645202	PARKING BRAKE LEVER GROUP	193
TC2-G646604	BRAKE ROD GROUP	194
TC2-G648106	ACCELERATOR LEVER GROUP	195
TC2-G663001	AUXLIARY STEP GROUP	196
TC2-G671501	FUEL TANK CAP GROUP	197
TC2-G681012	LOWER LINK GROUP(EXTENDABLE)	198
TC2-G682011	CHECK LINK GROUP	200
TC2-G683003	TOP LINK GROUP	201

https://tractormanualz.com/

TC2-G684005	LIFT ROD GROUP	202
TC2-G695005	PTO SHAFT COVER GROUP	203
TC2-G6D4004	LABEL(FRAME) GROUP	204
TC2-G6F6501	REFLECTOR GROUP	205
TC2-G6G1503	FRONT WEIGHT GROUP	206
TC2-G611203	AIR CLEANER SUPPORT GROUP	207
TC2-G612510	RADIATOR GROUP	208
TC2-G614502	FUEL COOLER GROUP	210
TC2-G615512	BONNET GROUP	211
TC2-G615701	BONNET SIDE COVER GROUP	213
TC2-G616002	BONNET SUPPORT GROUP	214
TC2-G617502	FUEL FILTER GROUP	216
TC2-G624002	VIBRATIONPROOF RUBBER GROUP	217
TC2-G636010	REAR VIEW MIRROR GROUP	218
TC2-G637004	LEVER GUIDE(ROPS) GROUP	219
TC2-G640104	MAIN SHIFT LEVER GROUP(SHUTTLE)	220
TC2-G640504	RANGE SHIFT LEVER GROUP	221
TC2-G640506	RANGE SHIFT LEVER GROUP	223
TC2-G641004	POSITION DRAFT CONTROL LEVER GROUP	224
TC2-G641503	DOUBLE ACTING VALVE LEVER GROUP	225
TC2-G644503	FRONT WHEEL DRIVE LEVER GROUP	227
TC2-G645502	DIFFERENTIAL PEDAL GROUP	228
TC2-G646004	CLUTCH PEDAL GROUP	229
TC2-G646506	BRAKE PEDAL GROUP	230
TC2-G648005	ACCELERATOR GROUP	231
TC2-G648202	ACCELERATOR PEDAL GROUP	232
TC2-G651004	STEERING WHEEL GROUP	233
TC2-G653009	STEERING COLUMN GROUP	234
TC2-G654002	STEERING COLUMN COVER GROUP	235
TC2-G655009	INSTRUMENT COVER GROUP	236
TC2-G661013	SEAT GROUP	237
TC2-G662014	STEP MAT GROUP	238
TC2-G671007	FUEL TANK GROUP	239
TC2-G672003	FUEL HOSE GROUP	241
TC2-G692015	DRAWBAR GROUP	242

[OPTION]

https://tractormanualz.com/

TC2-G591004 BEACON LIGHT GROUP(OPTION) 243
TC2-G6F2005 TOOL BOX 244
TC2-G6G1001 SUNSHADE GROUP 245
TC2-G6G3301 FRONT ROPS GROUP(OPT.-US) 246
TC2-G6G4101 ARM REST GROUP(OPTION) 249
TC2-G632002 FRONT ROPS GROUP(OPTION) 250
TC2-G6G0803 MID PTO LEVER GROUP(IND. PTO) 252
TC2-G6G1501 FRONT WEIGHT GROUP 256
TC2-G6G2501 LIFT ROD GROUP(OPTION) 257
TC2-G6G2601 FRONT GRILLE GUIDE GROUP 259
TC2-G6G2801 U TYPE DRAWBAR GROUP(OPTION) 260
TC2-G6A3001 REAR WEIGHT GROUP 261
TC2-G6F9007 ACCESSORIES_SERVICE PARTS GROUP 262

INDEX1 263
INDEX2 274

https://tractormanualz.com/

EF2-G102001

OIL PAN GROUP

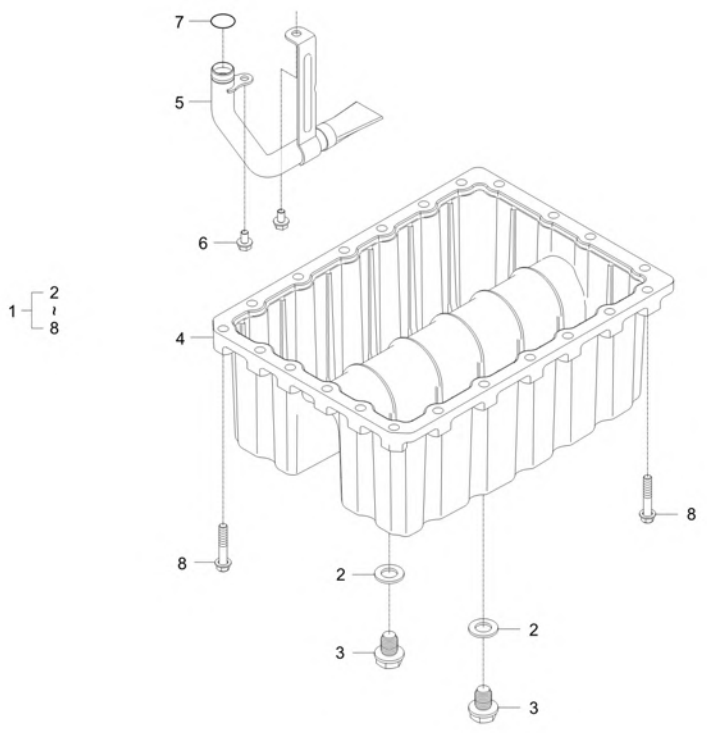

A : CK3510SEB

No.	Part Number	Description	Qty A	Qty B	Qty C	Qty D	Qty E	I.C	Remark
1	F5800-01601	ASSY FAN,OIL v	1						
1	F5800-01602	ASSY FAN,OIL v	1					<------	-
2	E6303-33661	GASKET	2						2.0t
3	E6303-33751	PLUG	2						-
3	E6303-33752	PLUG	2					<------	-
4	F5800-01611	FAN,OIL	1						
5	F5800-32111	OIL STRAINER ASSY	1						
6	01754-50610	BOLT, FLANGE	2						M6XP1.0
7	04811-00150	O RING v	1						
8	01654-50835	BOLT	22						M8x1.25

----> Old replace New
<---- New replace Old
<-X-> Not interchangeable
<---> Interchangeable
<-O-> Interchangeable with another part(s)
* Please place an order assy(*)

https://tractormanualz.com/

EF2-G103001

CYLINDER HEAD GROUP

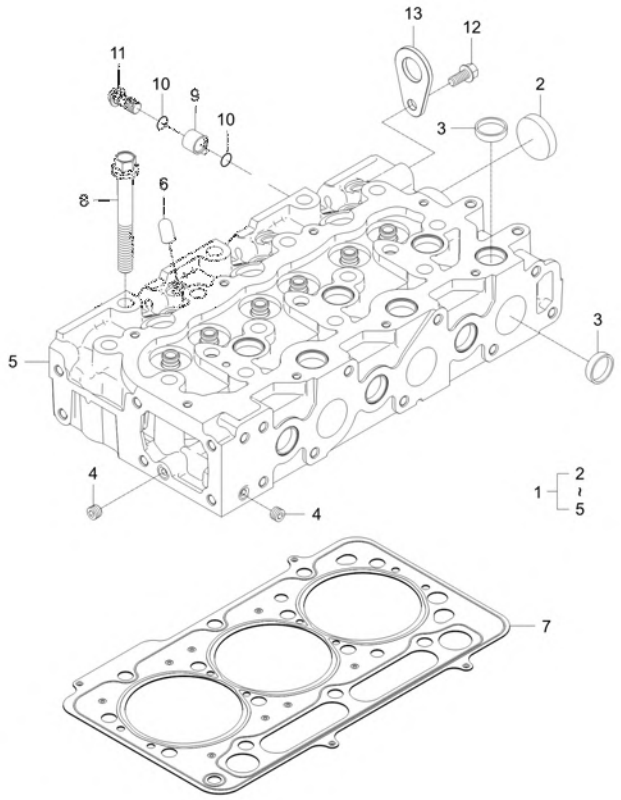

A : CK3510SEB

No.	Part Number	Description	Qty A	Qty B	Qty C	Qty D	Qty E	I.C	Remark
1	F5800-03044	ASSY HEAD,CYLINDER	1						
2	15221-0337-3	CAP SEALING	9						T1.6*40*40
3	15221-0349-3	CAP SEALING	1						T1.6*60*60
4	E5900-96022	PLUG	2						-
5	F5800-03054	CYLINDER HEAD SUB ASSY	1						-
6	F6800-03501	HINGE, INJECTOR CLAMP	3						
7	F5800-03311	GASKET,HEAD	1						
8	F6800-03451	BOLT,CYLINDER HEAD	14						
9	F5850-73341	CONNECTOR, COOLANT	1						
10	04814-00160	O RING	2						
11	T4260-62552	JOINT BOLT	1						
12	01754-50816	BOLT, FLANGE	1						M8XP1.25
13	15221-0175-1	ENGINE HOOK	1						T4*40*64

----> Old replace New
<---- New replace Old
<-X-> Not interchangeable
<---> Interchangeable
<-O-> Interchangeable with another part(s)
* Please place an order assy(*)

https://tractormanualz.com/

EF2-G104501

GEAR CASE COVER GROUP

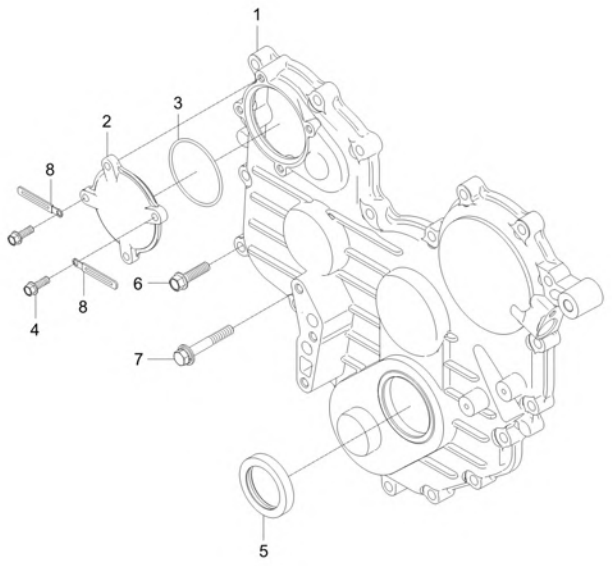

A : CK3510SEB

No.	Part Number	Description	Qty A	Qty B	Qty C	Qty D	Qty E	I.C	Remark
1	F6800-04215	COVER, GEAR CASE v	1						-
2	F6800-04251	COVER, HP PUMP GEAR	1						
3	04811-06630	O RING	1						Dia63
4	01754-50616	BOLT, FLANGE v	4						M6*P1.0
5	E5500-11302	OIL SEAL	1						
6	01754-50830	BOLT FLANGE	20						M8*P1.25
7	01125-50855	BOLT	1						
8	34150-2939-1	CLAMP, WIRE	2						-

----> Old replace New
<---- New replace Old
<-X-> Not interchangeable
<---> Interchangeable
<-O-> Interchangeable with another part(s)
* Please place an order assy(*)

https://tractormanualz.com/

EF2-G109001

CAMSHAFT GROUP

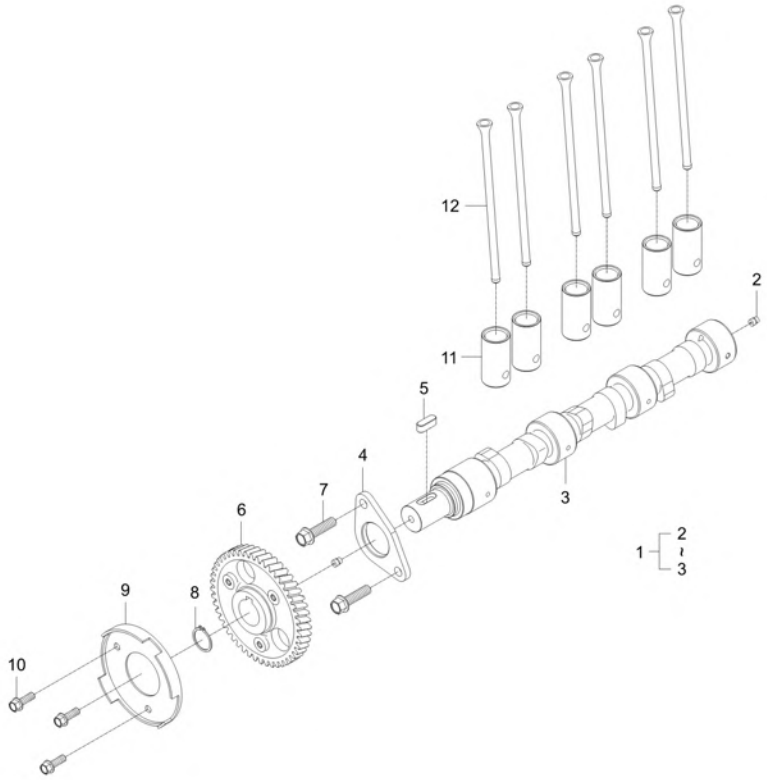

A : CK3510SEB

No.	Part Number	Description	Qty A	Qty B	Qty C	Qty D	Qty E	I.C	Remark
1	F5800-16012	ASSY CAMSHAFT v	1						N
2	06350-00607	PLUG v	2						
3	F5800-16152	CAMSHAFT	1						N
4	F6800-16271	STOP, CAM SHAFT	1						
5	05712-00720	KEY	1						8*8*24
6	F6800-16511	CAMSHAFT GEAR	1						
7	01754-50830	BOLT FLANGE	2						M8*P1.25
8	E5205-24321	SNAP RING	1						T2
9	F6800-09051	WHEEL, CAMSHAFT SENSOR	1						2T
10	01754-50612	BOLT, FLANGE	3						M6*1.0
11	E5500-15553	TAPPET	6						DIA26*51
12	F6800-15111	ROD PUSH v	6						

----> Old replace New <---- New replace Old <-X-> Not interchangeable
<---> Interchangeable <-O-> Interchangeable with another part(s)
* Please place an order assy(*)

https://tractormanualz.com/

EF2-G110001

IDLE GEAR GROUP

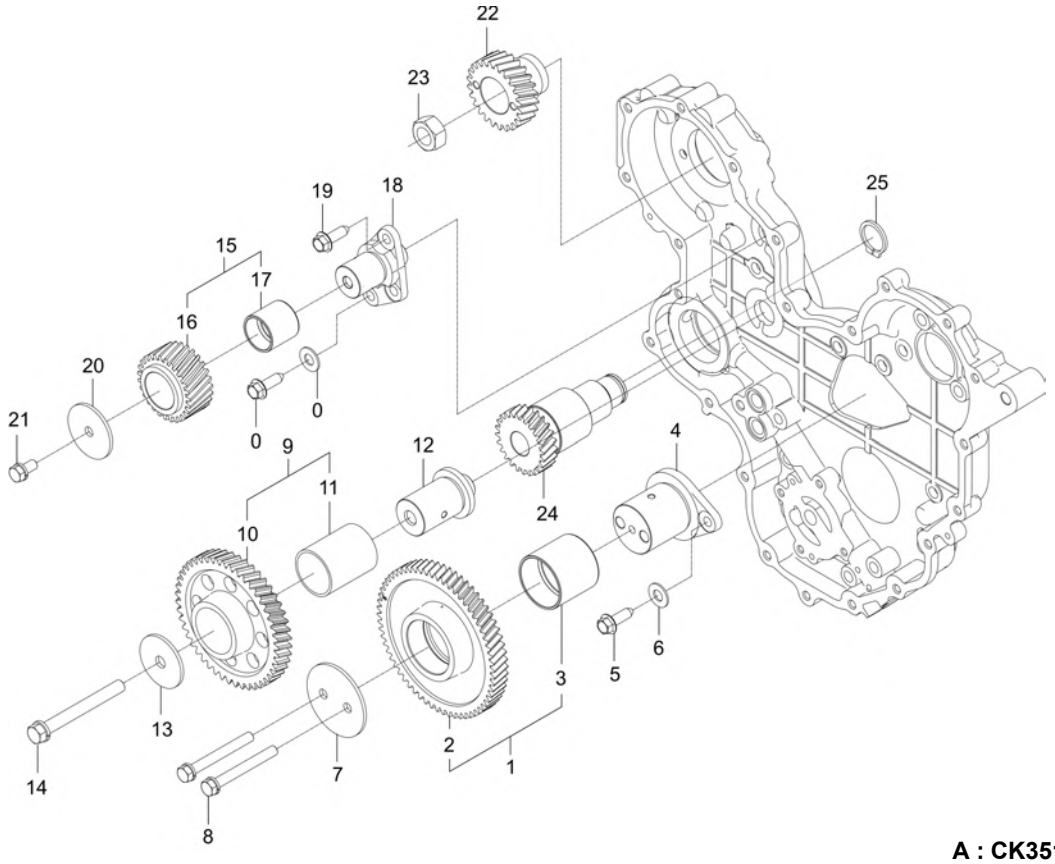

A : CK3510SEB

No.	Part Number	Description	Qty A	Qty B	Qty C	Qty D	Qty E	I.C	Remark
1	F5850-10102	Assy IDLE GEAR1	1						-
2	F5850-10112	IDLE GEAR, 1	1						-
3	F6800-10121	Bush, Idle Gear1	1						
4	F6800-10155	SHAFT,IDLEGEAR1 v	1						-
5	EF15-0030A	FLANGE BOLT v	2						
6	EF15-0029A	NORD-LOCK WASHER v	3						
7	F6800-10163	STOPPER 1, IDLE GEAR	1						-
8	01123-50870	WASHER BOLT	2						
9	F6800-10301	IDLE GEAR ASSY, 3	1						
10	F6800-10311	IDLE GEAR, 3	1						
11	F6800-10321	Bush, Idle Gear3	1						
12	F6800-10353	SHAFT 3, IDLE GEAR v	1						-
13	F6800-10261	STOPPER, IDLE GEAR 2	1						
14	01133-51090	BOLT	1						P1.25
15	F6800-10401	IDLE GEAR ASSY, 4	1						
16	F6800-10411	IDLE GEAR, 4	1						
17	F6800-10421	Bush, Idle Gear4	1						
18	F6800-10455	SHAFT,IDLEGEAR4 v	1						-

----> Old replace New
<----> Interchangeable
* Please place an order assy(*)
<---- New replace Old
<-O-> Interchangeable with another part(s)
<-X-> Not interchangeable

https://tractormanualz.com/

EF2-G110001

IDLE GEAR GROUP

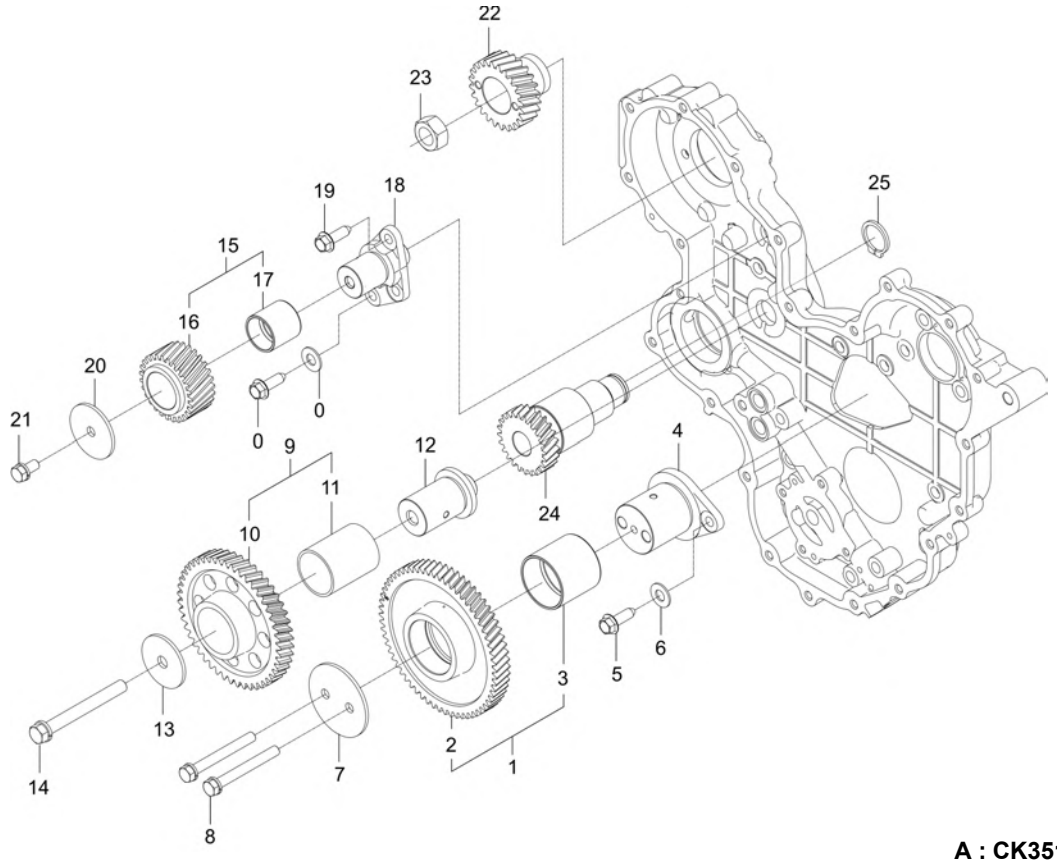

A : CK3510SEB

No.	Part Number	Description	Qty A	Qty B	Qty C	Qty D	Qty E	I.C	Remark
19	EF15-0038A	BOLT, FLANGE	3						-
20	F6800-10261	STOPPER, IDLE GEAR 2	1						
21	EF15-0039A	BOLT, WITH WASHER	1						-
22	F6800-10502	GEAR, HP FUEL PUMP	1						N
23	F6800-92771	FLANGE NUT	1						M14x1.5
24	F6800-10612	GEAR, HYDRAULIC PUMP DRIVE	1						-
25	15471-9536-1	SNAP_RING	1						

----> Old replace New
<----> Interchangeable
* Please place an order assy(*)
<---- New replace Old
<-O-> Interchangeable with another part(s)
<-X-> Not interchangeable

https://tractormanualz.com/

EF2-G111001

ROCKER ARM_VALVE GROUP

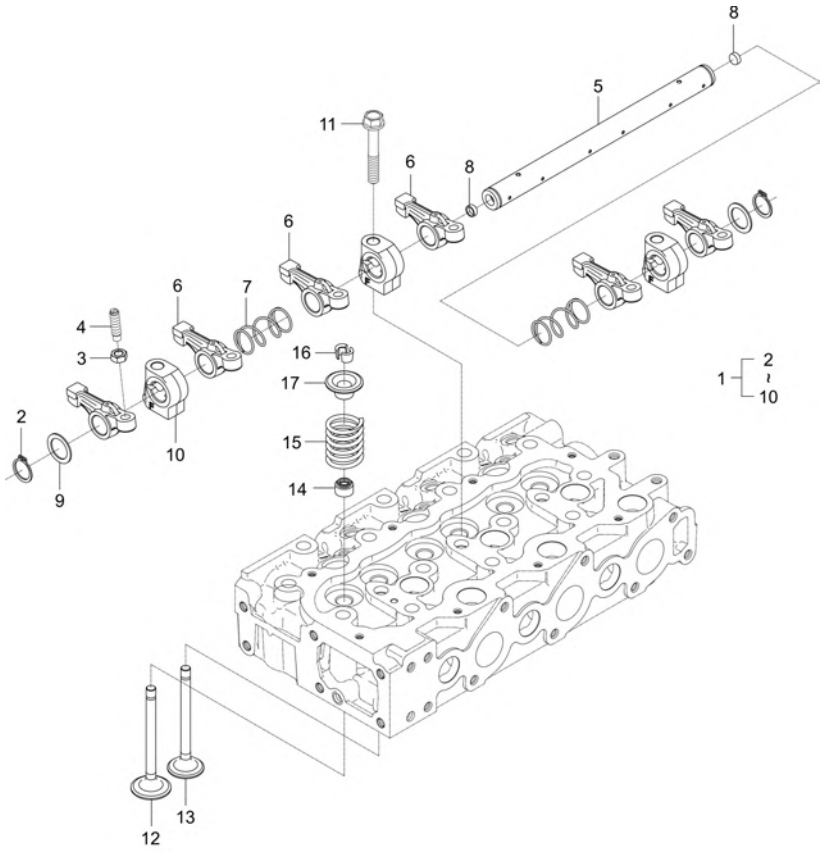

A : CK3510SEB

No.	Part Number	Description	Qty A	Qty B	Qty C	Qty D	Qty E	I.C	Remark
1	F5800-14001	ASSY ARM,ROCKER	1						
2	04612-00190	SNAP RING	2						
3	15021-1424-1	NUT	6						HEX12,M8*1.0*11
4	E5500-14232	SCREW,ADJUSTING	6						DIA10,M8*1.0*34
5	E5800-14261	SHAFT,ROCKER ARM	1						
6	E6301-14111	ROCKERARM	6						
7	E6301-14311	ROCKERARM SPRING	2						
8	E6301-14331	CAP, SEALING obs v	2						
9	E6301-14431	PLAIN WASHER	2						T1.2*30*30
10	F6800-14351	BRACKET, ROCKER ARM	3						
11	E6510-91502	BOLT,(R/A SUPPORT) v	3						
12	E6700-13111	VALVE, INTAKE	3						
13	E6700-13121	EXHAUST VALVE v	3						
14	E6301-13151	SEAL, VALVE STEM	6						
15	E6400-13241	SPRING, VALVE	6						
16	E6403-13361	COLLET,VALVE SPRING v	12						KK8(독일 TRW)
17	E5500-13333	RETAINER VALVE SPRING v	6						

----> Old replace New <---- New replace Old <-X-> Not interchangeable
<---> Interchangeable <-O-> Interchangeable with another part(s)
* Please place an order assy(*)

https://tractormanualz.com/

EF2-G115001

WATER PUMP GROUP

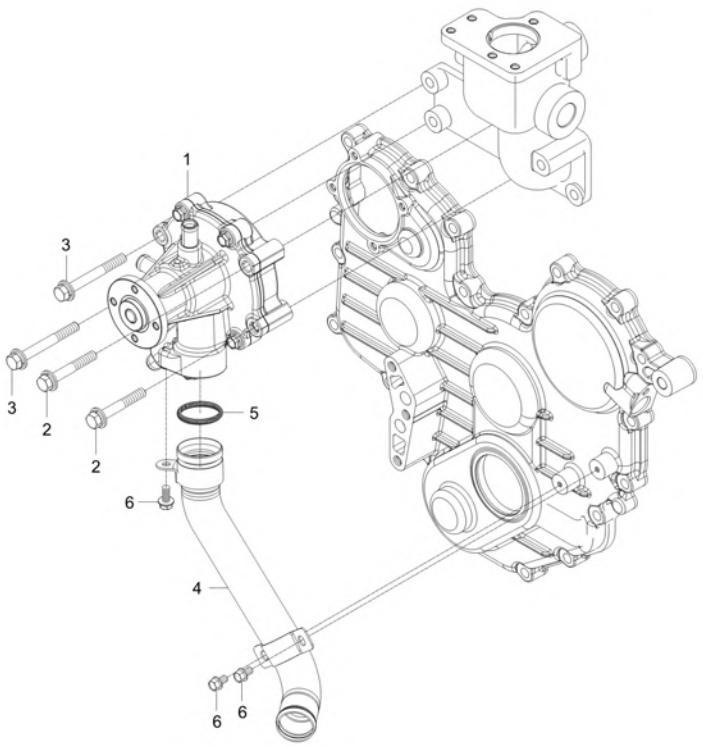

A : CK3510SEB

No.	Part Number	Description	Qty A	Qty B	Qty C	Qty D	Qty E	I.C	Remark
1	F6800-73031	ASSY PUMP,WATER sp v	1						
2	01125-50850	BOLT, WASHER	2						M8*P1.25
3	01125-50870	BOLT, WASHER	2						
4	F6800-73051	WATER PUMP PIPE ASSY	1						
5	04811-00320	O RING v	1						(P32)
6	01754-50610	BOLT, FLANGE	3						M6XP1.0

----> Old replace New
<---- New replace Old
<-X-> Not interchangeable
<---> Interchangeable
<-O-> Interchangeable with another part(s)
* Please place an order assy(*)

https://tractormanualz.com/

EF2-G119001

EGR GROUP

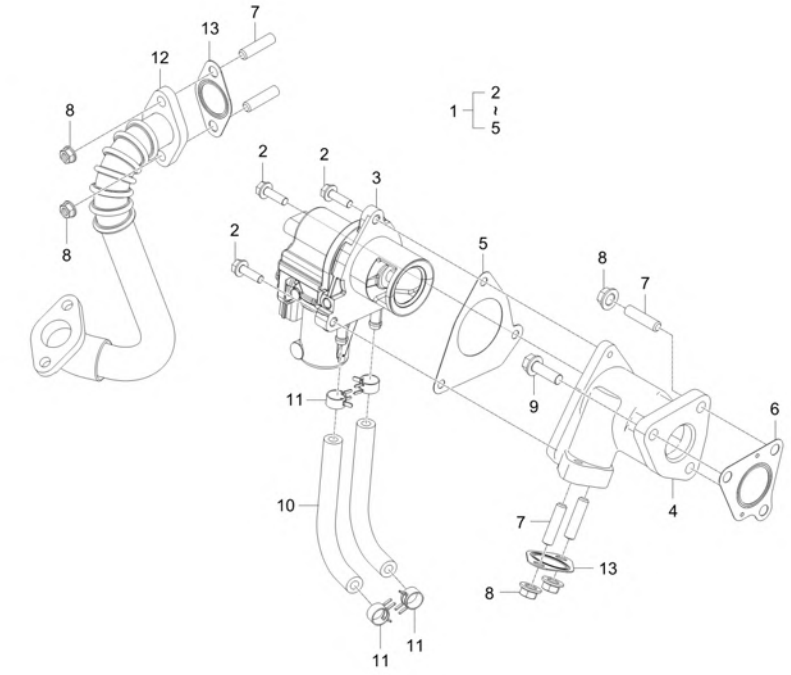

A : CK3510SEB

No.	Part Number	Description	Qty A	Qty B	Qty C	Qty D	Qty E	I.C	Remark
1	F5800-17502	EGR VALVE AND HOUSING ASSY	1						
1	F5800-17503	EGR VALVE AND HOUSING ASSY	1					<----->	
2	01754-50620	BOLT, FLANGE	3						
3	F5800-17512	EGR VALVE ASSY	1						
4	F5800-17521	EGR HOUSING HOUSING	1						N
4	F5800-17522	EGR HOUSING HOUSING	1					<----->	-
5	F5800-17531	GASKET	1						
6	F6800-17551	GASKET, EGR HOUSING	1						
7	01513-50822	STUD	5						M8*1.25
8	02763-50080	FLANGE NUT	5						M8XP1.25
9	01754-50825	BOLT, FLANGE	2						M8XP1.25
10	F5830-17562	COOLING HOSE	2						
11	09318-88130	CLAMP, HOSE	4						
12	F5830-17801	EGR PIPE ASSY	1						N
13	F6800-20301	GASKET, EGR	2						

----> Old replace New
<---- New replace Old
<-X-> Not interchangeable
<---> Interchangeable
<-O-> Interchangeable with another part(s)
* Please place an order assy(*)

https://tractormanualz.com/

EF2-G122003

EGR COOLER GROUP

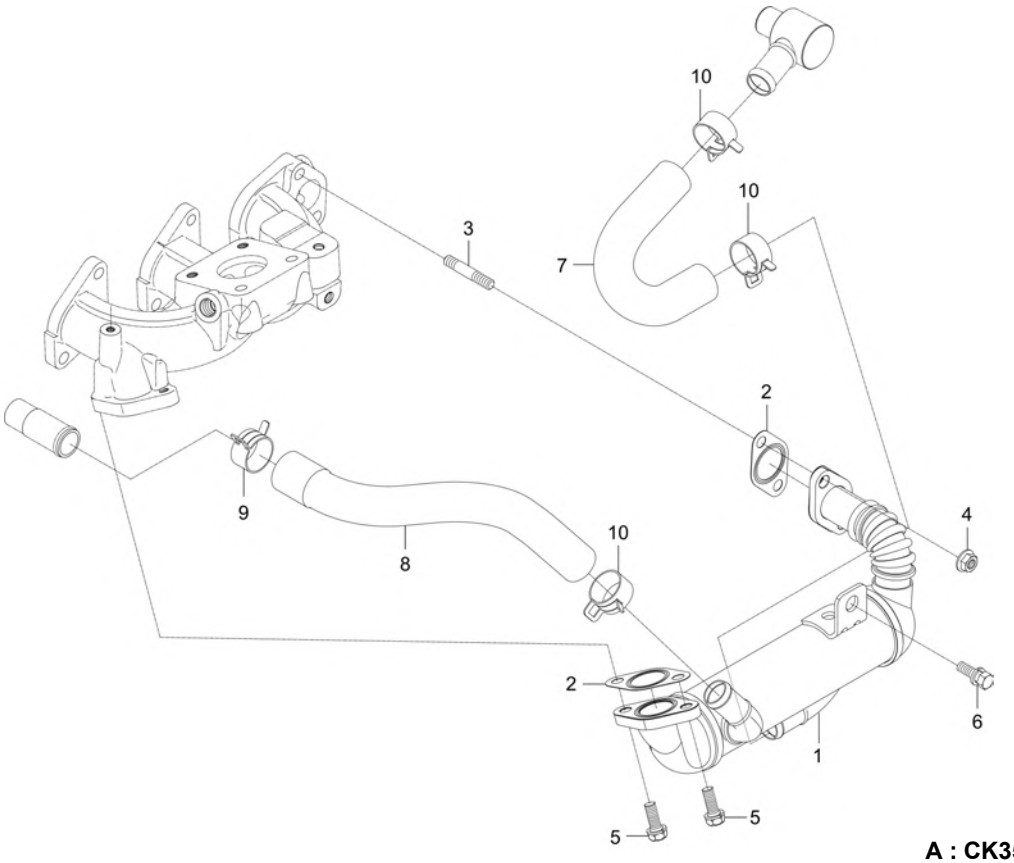

A : CK3510SEB

No.	Part Number	Description	Qty A	Qty B	Qty C	Qty D	Qty E	I.C	Remark
1	F5800-20101	EGR COOLER ASSY	1						
2	F6800-20301	GASKET, EGR	2						
3	01513-50835	STUD	2						
4	F6800-91911	U-NUT	2						-
5	01123-50822	WASHER BOLT	2						M8XP1.25
6	01123-50816	Hex Head Cap Screw	1						M8XP1.25
7	F6800-20401	HOSE 1, EGR COOLER	1						
8	F6800-20501	HOSE 2, EGR COOLER	1						
9	09318-88260	HOSE CLAMP	1						
10	09318-88250	CLAMP	3						

----> Old replace New
<---- New replace Old
<-X-> Not interchangeable
<---> Interchangeable
<-O-> Interchangeable with another part(s)
* Please place an order assy(*)

https://tractormanualz.com/

EF2-G130001

ECU GROUP

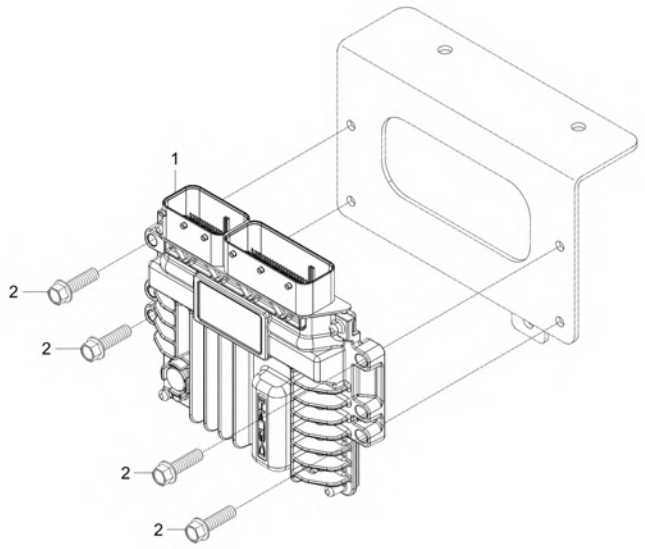

A : CK3510SEB

No.	Part Number	Description	Qty A	Qty B	Qty C	Qty D	Qty E	I.C	Remark
1	F6800-26102	333...ENG ECU T4 -Need Program v	1 ~ VJJ700008						
1	EH39-0001A	050 - CONTROLLER, ENGINE dnr v	1 VJJ700009 ~ WJJ700036					<----->	
2	01754-50625	BOLT, FLANGE	6						7T

----> Old replace New
<---> Interchangeable
* Please place an order assy(*)
<---- New replace Old
<-O-> Interchangeable with another part(s)
<-X-> Not interchangeable

https://tractormanualz.com/

EF3-G101001

CYLINDER BLOCK GROUP

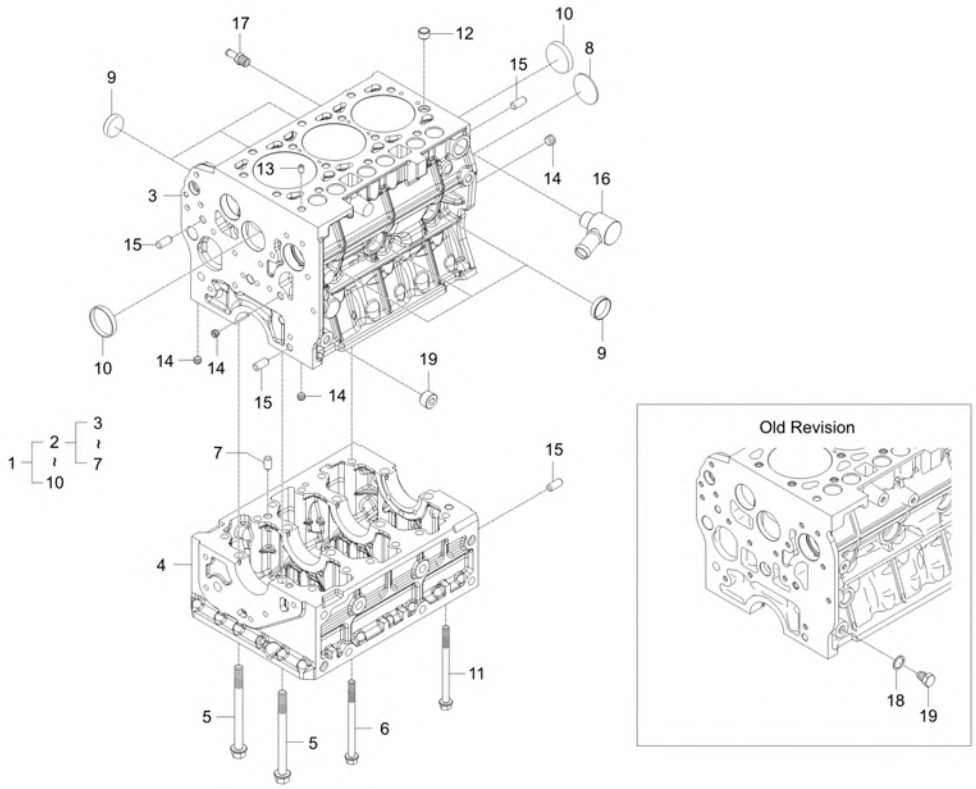

A : CK3510SEB

No.	Part Number	Description	Qty A	Qty B	Qty C	Qty D	Qty E	I.C	Remark
1	F5850-01007	ASSY BLOCK,CYLINDER	1						-
1	F5850-01008	ASSY BLOCK,CYLINDER	1					<--O-->	-
2	F5850-01107	CYLINDER BLOCK SUB ASSY	1						-
2	F5850-01108	CYLINDER BLOCK SUB ASSY	1					<--O-->	-
3	F5850-01115	CYLINDER BLOCK	1						-
3	F5850-01116	CYLINDER BLOCK	1					<--O-->	-
4	F5800-01124	LADDER FRAME	1						-
5	F6800-90111	BOLT, MAIN BEARING	8						N
6	F6800-90121	BOLT, LADDER FRAME	4						-
7	05012-01018	PIN, STRAIGHT	2						
8	06311-75045	PLUG	1						T2*48*48
9	15221-0338-3	CAP, SEALING	6						-
10	15221-0339-2	CAP SEALING	2						-
11	F6800-90121	BOLT, LADDER FRAME	8						-
12	E6301-33812	PIN, PIPE	1						N
13	F6800-33651	PIN	1						-
14	E5900-96022	PLUG	4						-
15	05012-01018	PIN, STRAIGHT	4						

----> Old replace New
<----> Interchangeable
* Please place an order assy(*)
<---- New replace Old
<-O-> Interchangeable with another part(s)
<-X-> Not interchangeable

https://tractormanualz.com/

EF3-G101001

CYLINDER BLOCK GROUP

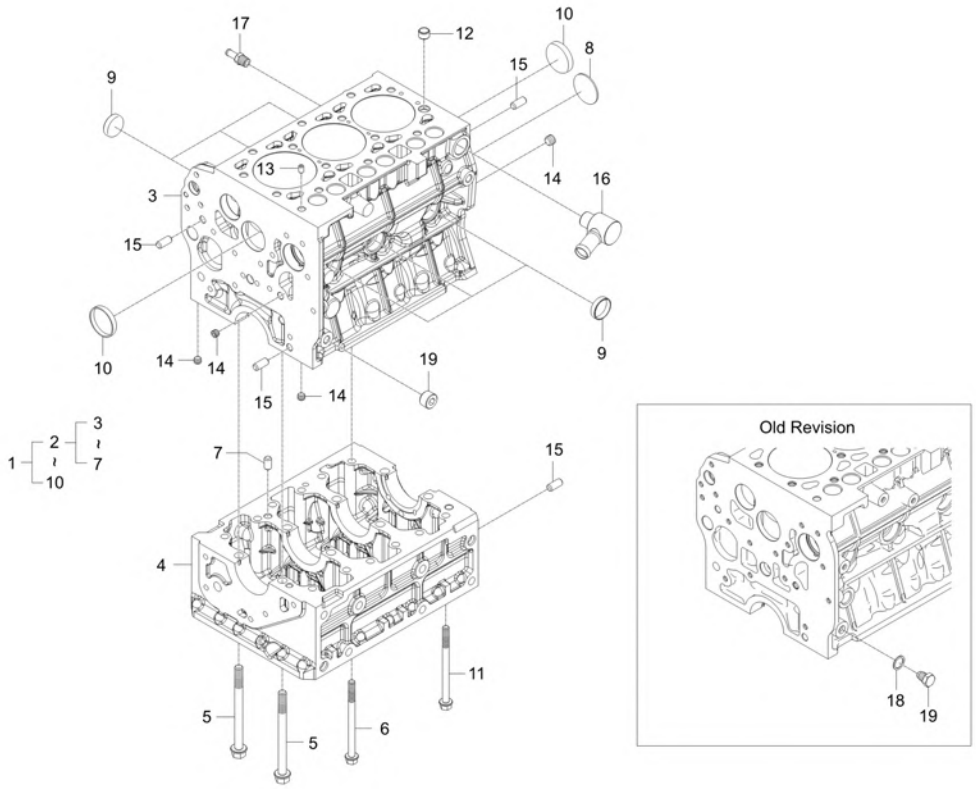

A : CK3510SEB

No.	Part Number	Description	Qty A	Qty B	Qty C	Qty D	Qty E	I.C	Remark
16	F6800-20703	COOLANT CONNECTOR ASSY	1						-
17	F6800-73341	JOINT, HOSE	1						
18	04724-00120	PACKING	1						T2.0
19	F5850-24401	PLUG	1						
19	E5900-96032	PLUG	1					<--O-->	

----> Old replace New
<---> Interchangeable
* Please place an order assy(*)
<---- New replace Old
<-O-> Interchangeable with another part(s)
<-X-> Not interchangeable

https://tractormanualz.com/

EF3-G102503

OIL GAUGE GROUP

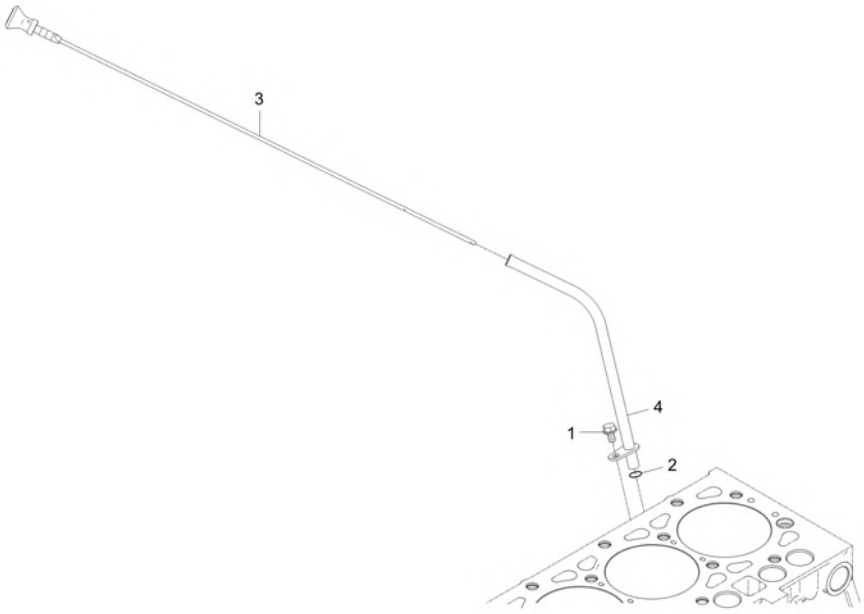

A : CK3510SEB

No.	Part Number	Description	Qty A	Qty B	Qty C	Qty D	Qty E	I.C	Remark
1	01754-50610	BOLT, FLANGE	1						M6XP1.0
2	04811-00100	O RING	1						
3	F5800-36412	OIL GAUGE	1						-
3	F5800-36413	GAUGE,OIL	1					<----->	-
3	F5800-36414	GAUGE,OIL	1					<----->	-
4	F5800-36422	OIL GAUGE GUIDE ASSY	1						

----> Old replace New
<----> Interchangeable
* Please place an order assy(*)
<---- New replace Old
<-O-> Interchangeable with another part(s)
<-X-> Not interchangeable

https://tractormanualz.com/

EF3-G104001

GEAR CASE GROUP

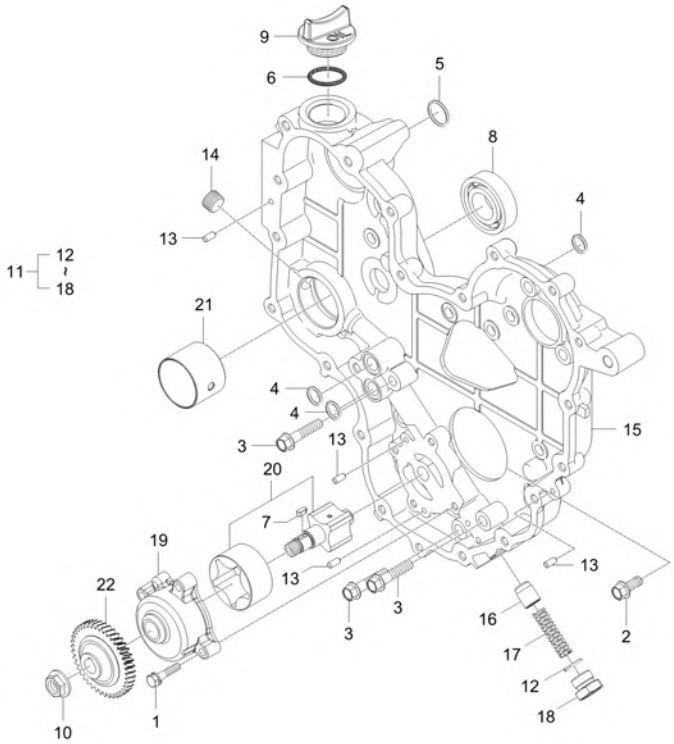

A : CK3510SEB

No.	Part Number	Description	Qty A	Qty B	Qty C	Qty D	Qty E	I.C	Remark
1	01754-50625	BOLT, FLANGE	4						7T
2	01754-50816	BOLT, FLANGE	10						M8XP1.25
3	01754-50835	BOLT v	3						
4	04811-00150	O RING v	3						
4	04816-00150	O_RING	3					<------	DIA14.8
5	04811-00220	O RING	2						
5	04816-00220	O_RING dnr v	2					<------	DIA21.8
6	04811-50300	O RING v	1						G30
7	05712-00410	KEY	1						5*5*14
8	08101-06205	BEARING BALL dnr v	1						DIA25
9	E5500-33142	PLUG, OIL FILLER	1						
10	E6300-35681	FLANGE NUT	1						M12*P1.25
11	F5850-04103	ASSY CASE,GEAR	1						
11	F5850-04104	ASSYCASE,GEAR	1					<----->	
11	F5850-04105	ASSY CASE,GEAR	1					<----->	
11	F5850-04106	ASSY CASE,GEAR	1					<----->	
12	04811-00160	O RING	1						DIA15.8
13	05012-00510	PIN,STRAIGHT	4						

----> Old replace New <---- New replace Old <-X-> Not interchangeable
<---> Interchangeable <-O-> Interchangeable with another part(s)
* Please place an order assy(*)

https://tractormanualz.com/

EF3-G104001

GEAR CASE GROUP

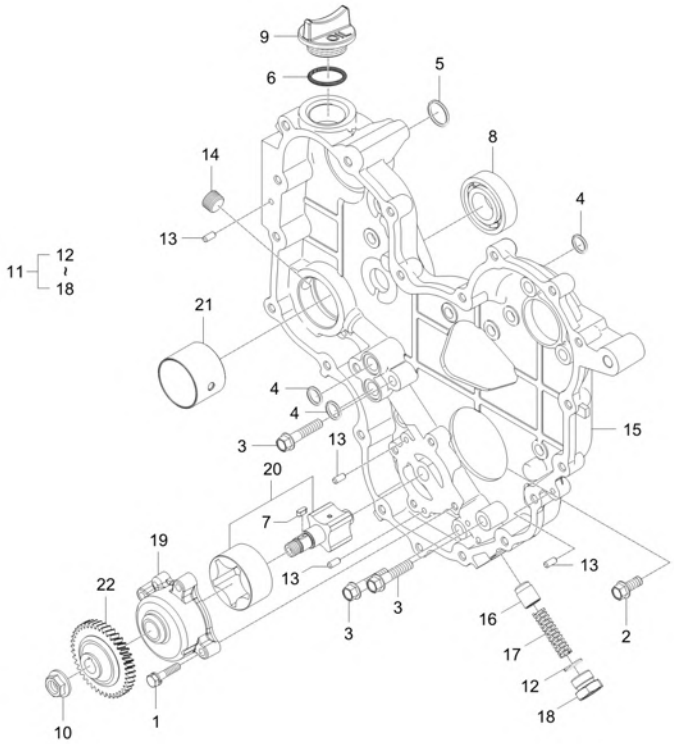

A : CK3510SEB

No.	Part Number	Description	Qty A	Qty B	Qty C	Qty D	Qty E	I.C	Remark
14	E5800-96032	PLUG	1						PT3/8
15	F5800-04113	GEAR CASE v	1						-
15	F5800-04114	GEAR CASE v	1					<----->	-
15	F5800-04115	GEAR CASE	1					<----->	-
15	F5800-04116	GEAR CASE	1					<----->	-
16	F6720-04711	PLUNGER, RELIEF VALVE v	1						N
16	F6720-04712	PLUNGER, RELIEF VALVE	1					<----->	-
17	F6720-04721	SPRING, RELIEF VALVE	1						DIA1.8
18	F6720-04731	PLUG, RELIEF VALVE v	1						N
19	F6800-04302	COVER, OIL PUMP	1						-
20	F6800-04401	OIL PUMP ROTOR SHAFT ASSY	1						N
21	F6800-04501	BUSH, PTO SHAFT	1						
22	F6800-35661	GEAR, OIL PUMP	1						-

----> Old replace New
<---- New replace Old
<-X-> Not interchangeable
<---> Interchangeable
<-O-> Interchangeable with another part(s)
* Please place an order assy(*)

https://tractormanualz.com/

EF3-G105001

OIL FILTER GROUP

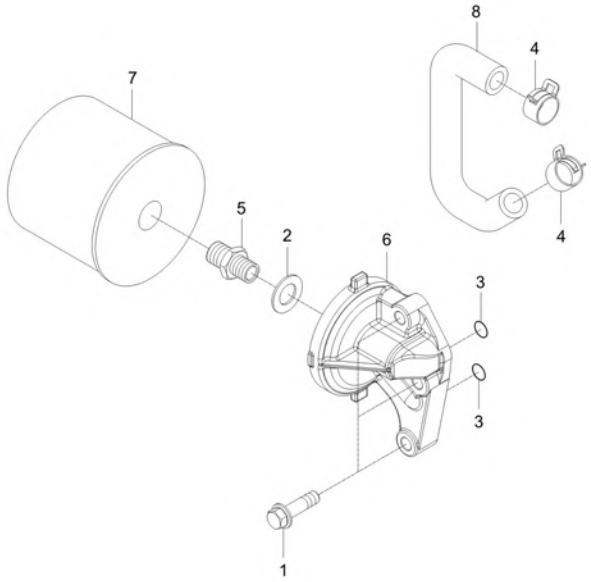

A : CK3510SEB

No.	Part Number	Description	Qty A	Qty B	Qty C	Qty D	Qty E	I.C	Remark
1	01754-50830	BOLT FLANGE	3						M8*P1.25
2	04011-50180	PLAIN WASHER	1						T2.9
3	04811-00150	O RING v	2						
3	04816-00150	O_RING	2					<------	DIA14.8
4	09318-88180	CLAMP, HOSE	2						
5	15521-3229-1	REAR MOUNT ASSEMBLY	1						HEX24,M20*1.5*47
6	E5850-32617	SUPPORT,OIL FILTER	1						-
7	E6201-32443	OIL FILTER sp v	1						
8	F5820-16161	HOSE 1, OIL COOLER	1						N

----> Old replace New
<---- New replace Old
<-X-> Not interchangeable
<---> Interchangeable
<-O-> Interchangeable with another part(s)
* Please place an order assy(*)

https://tractormanualz.com/

EF3-G106001

CRANK SHAFT GROUP

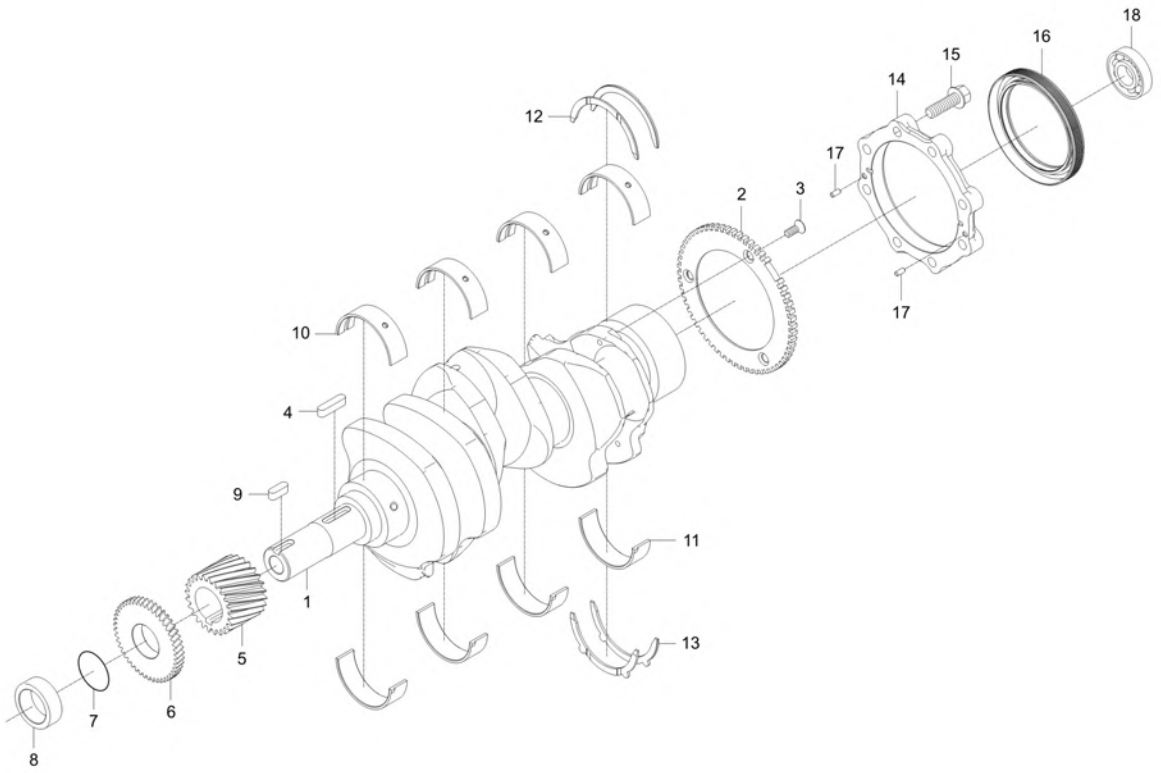

A : CK3510SEB

No.	Part Number	Description	Qty A	Qty B	Qty C	Qty D	Qty E	I.C	Remark
1	F5800-23111	SHAFT CRANK dnr v	1						
2	F5800-06201	WHEEL, CRANK POSITION SENSOR	1						
3	03016-50616	SCREW	3						M6XP1.0
4	05712-00730	KEY	1						W7XL30
5	F6800-24111	CRANKSHAFT GEAR	1						
6	F6800-35631	GEAR OIL PUMP DRIVE	1						
7	04811-10300	O RING	1						
8	19202-2325-1	CRANKSHAFT COLLAR	1						DIA44*20
8	19202-2325-2	SPACER	1					<----->	DIA44*20
9	05712-00720	KEY	1						8*8*24
10	F6800-23481	BEARING, CRANKSHAFT UPR	4						
11	F6800-23491	BEARING, CRANKSHAFT LWR	4						
12	F6800-23531	BEARING, CRANKSHAFT THRUST UPR	2						
13	F6800-23541	BEARING, CRANKSHAFT THRUST LWR	2						
14	F6800-04811	CASE,OIL SEAL	1						
15	01654-50830	FLANGE BOLT	8						7T
16	E5500-04464	OIL SEAL v	1						
17	05012-00408	STRAIGHT PIN	2						

----> Old replace New <---- New replace Old <-X-> Not interchangeable
<---> Interchangeable <-O-> Interchangeable with another part(s)
* Please place an order assy(*)

https://tractormanualz.com/

EF3-G106001

CRANK SHAFT GROUP

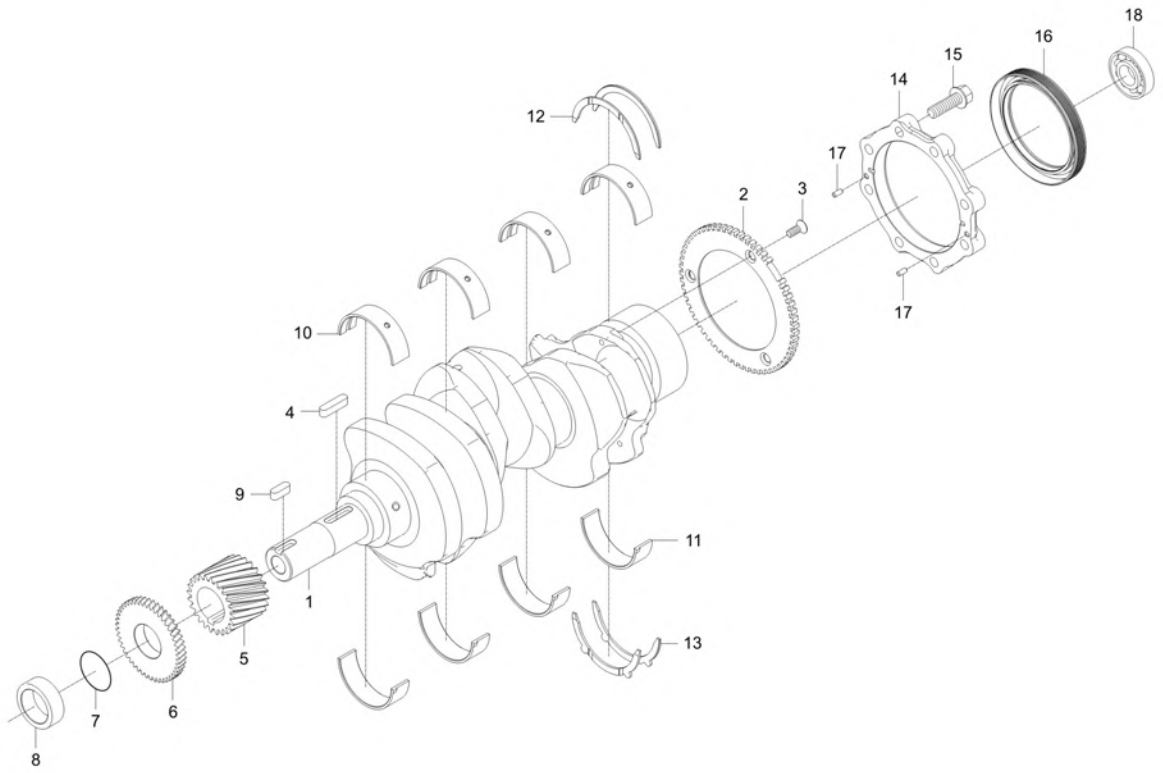

A : CK3510SEB

No.	Part Number	Description	Qty A	Qty B	Qty C	Qty D	Qty E	I.C	Remark
18	08121-06002	BEARING,BALL	1						#6002ZZ

----> Old replace New
<----> Interchangeable
* Please place an order assy(*)
<---- New replace Old
<-O-> Interchangeable with another part(s)
<-X-> Not interchangeable

https://tractormanualz.com/

EF3-G107001

PISTON_CONNECTING ROD GROUP

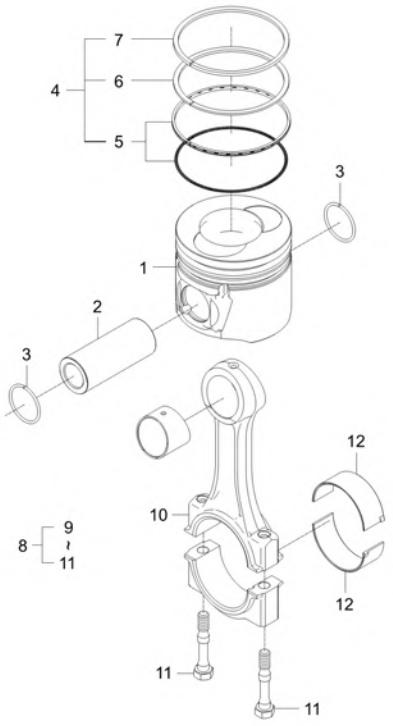

A : CK3510SEB

No.	Part Number	Description	Qty A	Qty B	Qty C	Qty D	Qty E	I.C	Remark
1	F5850-21112	PISTON	3						-
2	F5800-21311	PIN, PISTON	3						N
3	F5800-21331	RING, SNAP	6						N
4	E6302-21051	PISTON RING Assy	3						
5	E6301-21202	ASSY,OIL RING	1						
6	E6302-21151	RING 1, PISTON v	1						
7	E6302-21161	RING 2, PISTON	1						
8	F6800-22011	CONNECTING ROD	3						
9	F6800-21351	BUSH,PISTON PIN	1						
10	F6800-22111	CONNECTINGROD	1						N
11	F6800-22141	BOLT	2						N
12	EF15-0004A	BEARING, CONNECTING ROD	6						

----> Old replace New
<---- New replace Old
<-X-> Not interchangeable
<---> Interchangeable
<-O-> Interchangeable with another part(s)
* Please place an order assy(*)

https://tractormanualz.com/

EF3-G111501

FUEL EQUIPMENT GROUP

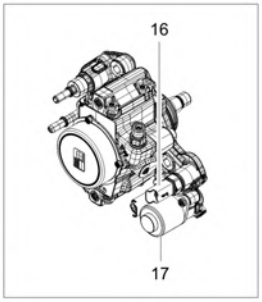

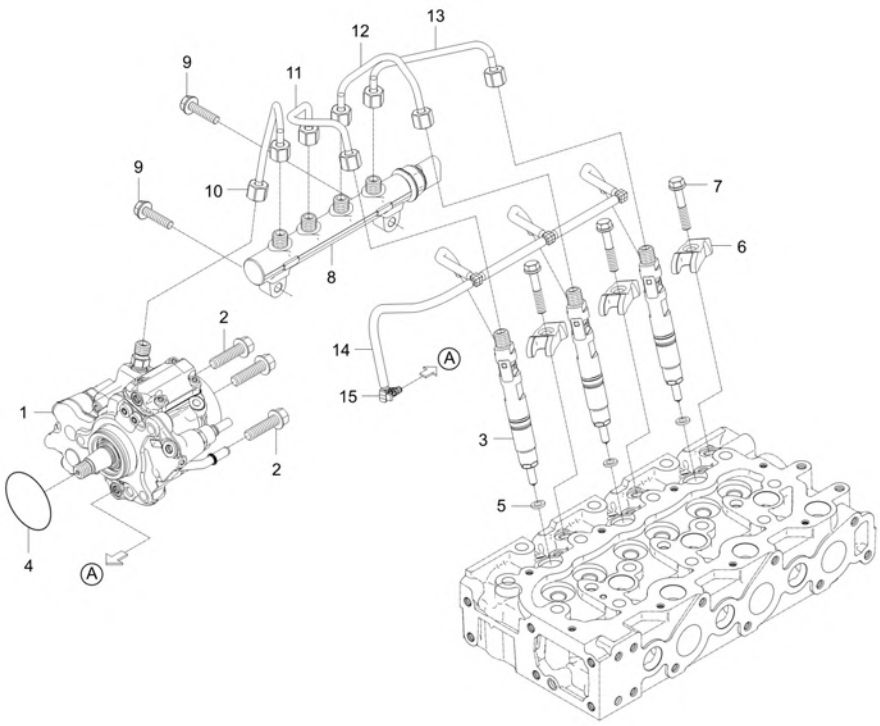

A : CK3510SEB

No.	Part Number	Description	Qty A	Qty B	Qty C	Qty D	Qty E	I.C	Remark
1	F6800-12104	HP FUEL PUMP ASSY v	1						
2	01754-50835	BOLT v	3						M8XP1.25
3	F6805-53001	INJECTOR ASS'Y v	3						N
4	04811-50500	O RING	1						
5	EF36-0011A	SEAT,INJECTOR	3						t=2.5
6	F6805-53452	CLMAP, INJECTOR v	3						
6	F6805-53453	CLAMP, INJECTOR	3					<----->	
7	F6800-53471	BOLT, INJECTOR CLMAP	3						
8	F5800-12203	FUEL RAIL ASSY	1						
9	01754-50830	BOLT FLANGE	2						M8XP1.25
10	F5800-12252	PIPE, RAIL	1						
11	F6800-53722	PIPE 2, INJECTION	1						
12	F6800-53732	PIPE 3, INJECTION	1						
13	F6800-53742	PIPE 4, INJECTION	1						
14	F5800-42501	INJECTOR RETURN TUBE ASSY	1						
15	F6800-42511	CONNECTOR	1						
16	F6800-12103002	FUEL TEMPERATURE SENSOR	1						-
17	F6800-12103001	INLET METERING VALVE	1						N

----> Old replace New
<---- New replace Old
<-X-> Not interchangeable
<---> Interchangeable
<-O-> Interchangeable with another part(s)
* Please place an order assy(*)

https://tractormanualz.com/

EF3-G114001

WATER FLANGE GROUP

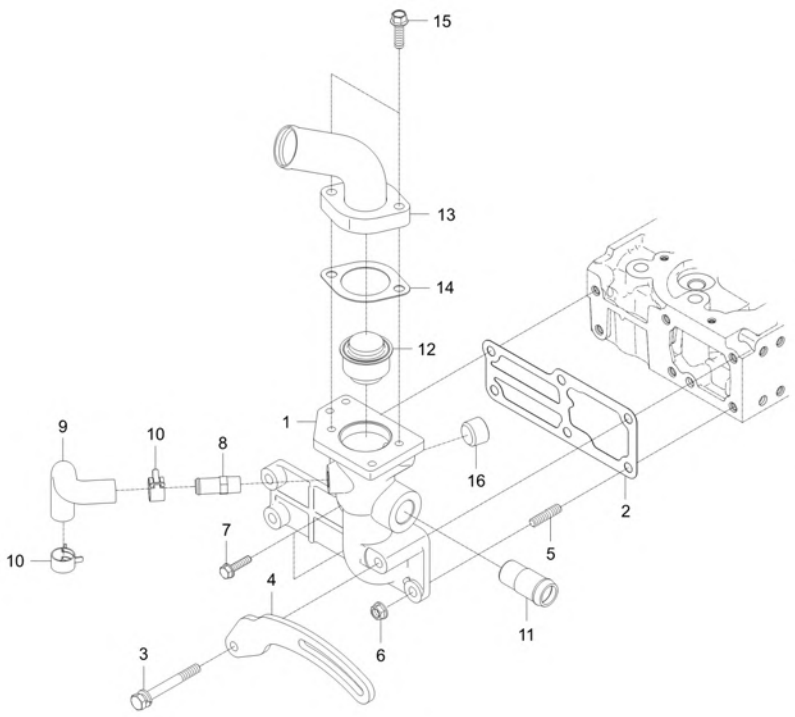

A : CK3510SEB

No.	Part Number	Description	Qty A	Qty B	Qty C	Qty D	Qty E	I.C	Remark
1	F5830-72914	PLANGE, WATER dnr v	1						N
2	F6800-72921	GASKET COOLING WATER FLANGE	1						
3	01123-50870	WASHER BOLT	1						
4	F6800-64421	SUPPORT, ALTERNATOR dnr v	1						
5	01513-50822	STUD	1						M8*1.25
6	02763-50080	FLANGE NUT	1						M8XP1.25
7	01754-50820	BOLT, FLANGE	2						M8XP1.25
8	E5500-73342	HOSE, WATER RETURN v	1						
8	E5500-73343	PIPE, WATER RETURN	1					<------	
9	E6850-73342	HOSE, WATER PUMP v	1						
10	09318-88180	CLAMP, HOSE	2						
11	F6800-13311	CONNECTOR, COOLANT	1						DIA22.3
12	E5500-73013	THERMOSTAT ASSEMBLY	1						
13	F5850-73262	COVER,THERMOSTAT	1						
14	E5500-73272	GASKET v	1						t1.0
15	01754-50825	BOLT, FLANGE	2						M8XP1.25
16	F6860-96042	PLUG	1						PT1/2

----> Old replace New
<---- New replace Old
<-X-> Not interchangeable
<---> Interchangeable
<-O-> Interchangeable with another part(s)
* Please place an order assy(*)

https://tractormanualz.com/

EF3-G116003

CYLINDER HEAD COVER GROUP

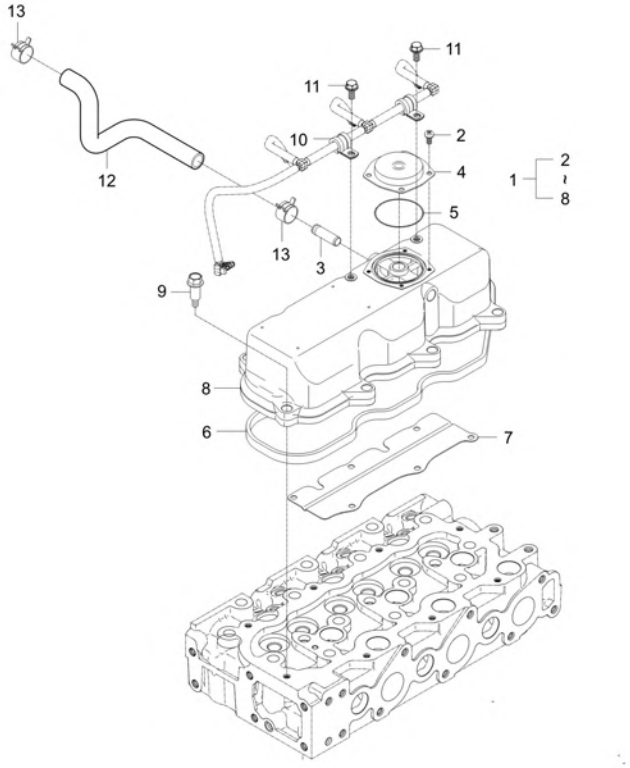

A : CK3510SEB

No.	Part Number	Description	Qty A	Qty B	Qty C	Qty D	Qty E	I.C	Remark
1	F5850-14501	CYLINDER HEAD COVER ASSEMBLY v	1						
2	03024-50510	SCREW, WASHER	4						M5*P0.8
3	E6510-05552	CONNECTOR, AIR BREATHER HOSE	1						N
4	E6510-14532	COVER, VALVE	1						N
5	E6510-14671	O RING	1						N
6	F5800-14521	GASKET, CYLINDER HEAD COVER	1						
7	F5800-14561	PROTECT PLATE OF OIL	1						
8	F5850-14511	COVER,CYLINDER HEAD v	1						
9	E6510-33661	BOLT, CYLINDER HEAD COVER v	8						
10	F6800-15122	CLAMP, HOSE	2						
11	01754-50610	BOLT, FLANGE	2						M6XP1.0
12	F5850-05511	HOSE, BLOW BY	1						N
13	09318-88180	CLAMP, HOSE	2						

----> Old replace New
<---- New replace Old
<-X-> Not interchangeable
<---> Interchangeable
<-O-> Interchangeable with another part(s)
* Please place an order assy(*)

https://tractormanualz.com/

EF3-G117005

FUEL HOSE GROUP

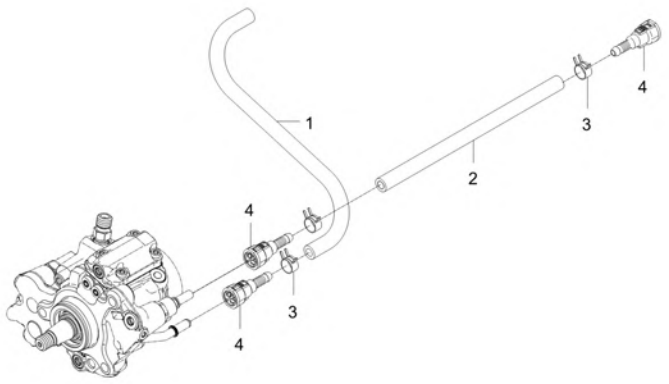

A : CK3510SEB

No.	Part Number	Description	Qty A	Qty B	Qty C	Qty D	Qty E	I.C	Remark
1	09661-80300	HOSE	1						-
2	09661-80450	HOSE	1						
3	14911-4275-1	CLIP, TUBE	3						T0.8*#12
4	F6800-16131	QUICK CONNECTOR	3						-

----> Old replace New
<---- New replace Old
<-X-> Not interchangeable
<---> Interchangeable
<-O-> Interchangeable with another part(s)
* Please place an order assy(*)

https://tractormanualz.com/

EF3-G118004

INTAKE MANIFOLD GROUP

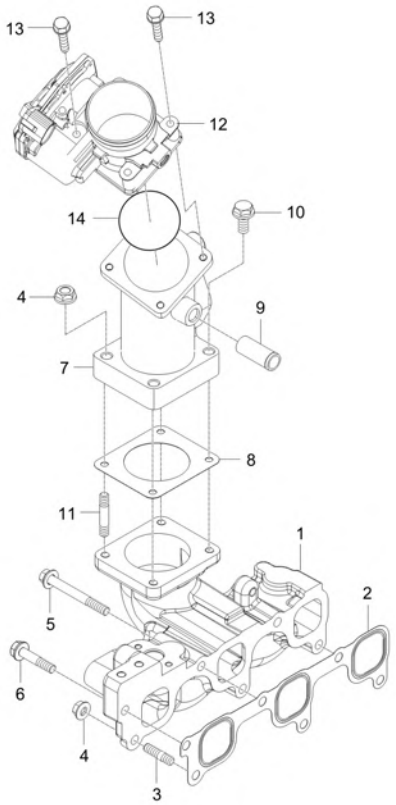

A : CK3510SEB

No.	Part Number	Description	Qty A	Qty B	Qty C	Qty D	Qty E	I.C	Remark
1	F5800-11762	MANIFOLD, INTAKE	1						N
1	F5800-11763	MANIFOLD, INTAKE	1					<----->	-
2	F5800-11821	GASKET, INTAKE MANIFOLD	1						
3	01513-50822	STUD	1						M8*1.25
4	02763-50080	FLANGE NUT	3						M8XP1.25
5	01125-50870	BOLT, WASHER	2						
6	01754-50830	BOLT FLANGE	3						M8*P1.25
7	EF36-0012A	FLANGE, INTAKE MANIFOLD	1						
8	F6800-17211	GASKET, INTAKE MANIFOLD FLANGE	1						
9	E6510-05552	CONNECTOR, AIR BREATHER HOSE	1						N
10	01754-50835	BOLT v	2						
11	01513-50835	STUD	2						
12	F6800-17701	AIR CONTROL VALVE ASSY	1						
13	01023-50645	BOLT, WASHER v	4						
14	EH13-0002A	O RING-ACV v	1						

----> Old replace New
<---> Interchangeable
* Please place an order assy(*)
<---- New replace Old
<-O-> Interchangeable with another part(s)
<-X-> Not interchangeable

https://tractormanualz.com/

EF3-G121001

EXHAUST MANIFOLD GROUP

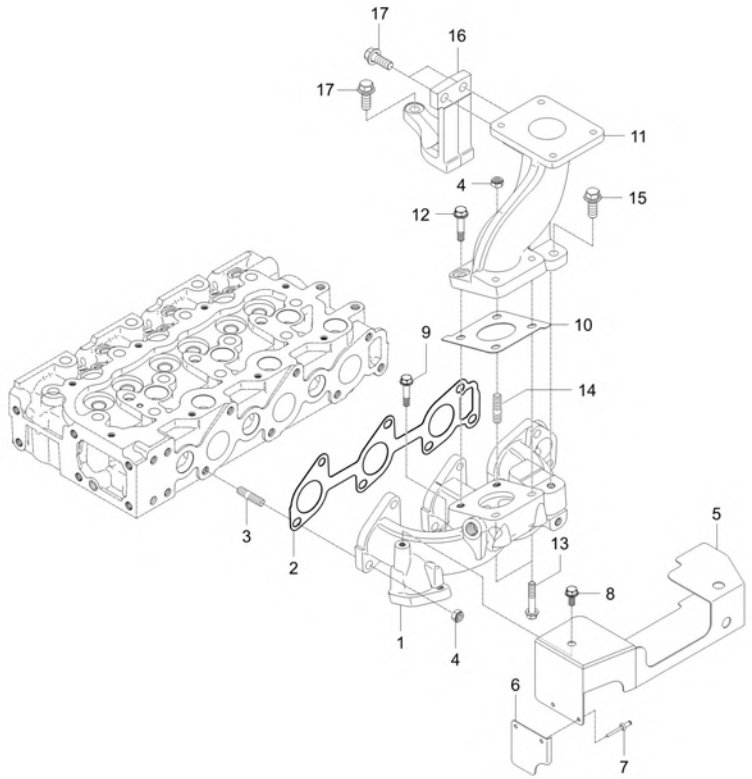

A : CK3510SEB

No.	Part Number	Description	Qty A	Qty B	Qty C	Qty D	Qty E	I.C	Remark
1	F5800-12313	MANIFOLD,EXHAUST	1						
2	F5800-12351	GASKET, EXHAUST MANIFOLD	1						
3	F6800-92451	BOLT, STUD	5						M8*P1.25
3	F6800-92452	BOLT, STUD	5					<------	M8*P1.25
4	F6800-91911	U-NUT	6						-
5	F5800-13764	PLATE,HEAT	1						t1.2
6	F5800-13773	PLATE	1						t1.2
7	F6800-94111	RIVET	2						
8	01754-50610	BOLT, FLANGE	1						M6XP1.0
9	01754-50640	FLANGE BOLT	1						
10	F6800-17101	GASKET 1, TURBOCHARGER	1						
11	F5850-11953	EXHAUST MANIFOLD FLANGE	1						N
12	F6800-92411	FLANGEBOLT	1						M8x1.25 25mm
13	F6800-92421	FLANGEBOLT	2						M8x1.25 65mm
14	F6800-92441	BOLT, STUD	1						
15	01123-50825	BOLT WITH WASHER	1						M8XP1.25
16	F6800-25501	SUPPORT, TURBOCHARGER FLANGE	1						
17	01123-50822	WASHER BOLT	4						M8XP1.25

----> Old replace New <---- New replace Old <-X-> Not interchangeable
<---> Interchangeable <-O-> Interchangeable with another part(s)
* Please place an order assy(*)

https://tractormanualz.com/

EF3-G122501

REAR PLATE GROUP

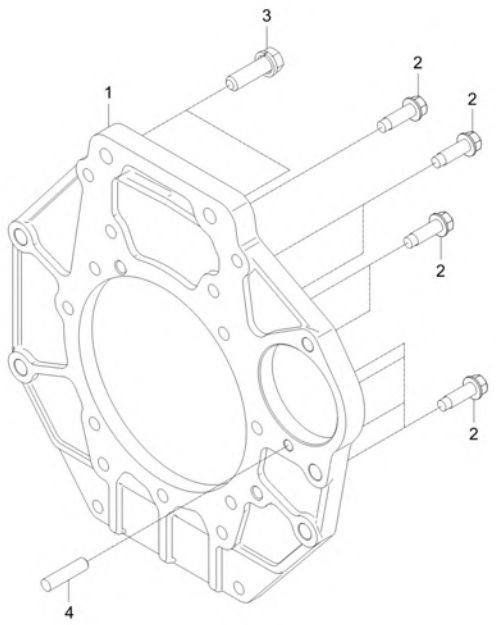

A : CK3510SEB

No.	Part Number	Description	Qty A	Qty B	Qty C	Qty D	Qty E	I.C	Remark
1	F5850-04612	PLATE	1						
2	EF11-0001A	BOLT,FLANGEWITHPIN	11						HRC20-28
3	01133-51240	BOLT, WASHER	2						M12XP1.25
4	01517-51028	STUD	1						M10XP1.25

----> Old replace New
<---- New replace Old
<-X-> Not interchangeable
<---> Interchangeable
<-O-> Interchangeable with another part(s)
* Please place an order assy(*)

https://tractormanualz.com/

EF3-G124002

FLYWHEEL GROUP

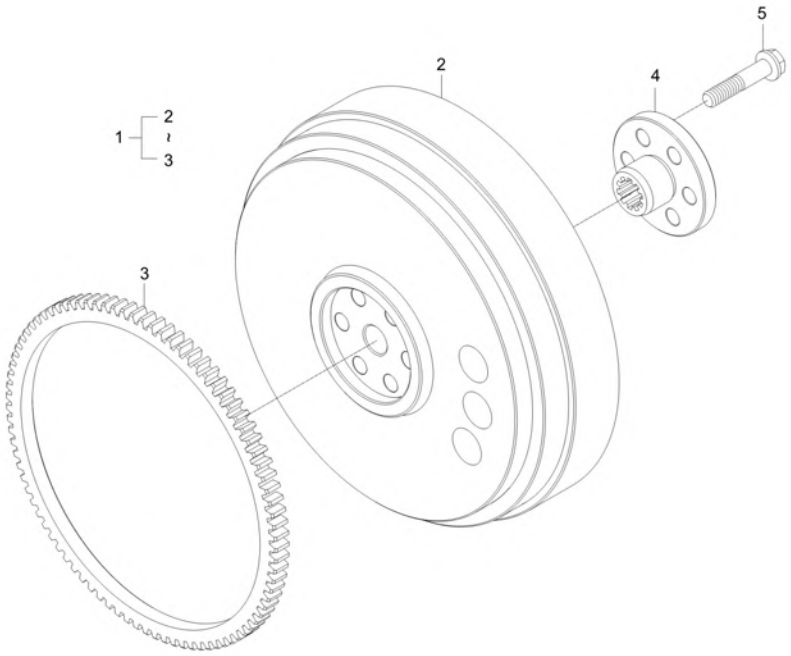

A : CK3510SEB

No.	Part Number	Description	Qty A	Qty B	Qty C	Qty D	Qty E	I.C	Remark
1	EF36-0020A	ASSY FLYWHEEL dnr v	1						
1	EF36-0020B	FLYWHEEL v	1					<------	
1	EF36-0020C	ASSY FLYWHEEL	1					<----->	
2	EF36-0021A	FLYWHEEL	1						
2	EF36-0021B	FLYWHEEL	1					<------	
2	EF36-0021C	FLYWHEEL	1					<----->	
3	E7103-63821	GEAR RING (use 15221-63824) dnr v	1						
4	E5800-25182	HUB, SPLINE	1						
5	E5800-25161	BOLT, FLYWHEEL	6						

----> Old replace New
<---> Interchangeable
* Please place an order assy(*)
<---- New replace Old
<-O-> Interchangeable with another part(s)
<-X-> Not interchangeable

https://tractormanualz.com/

EF3-G129001

AFTER TREATMENT GROUP

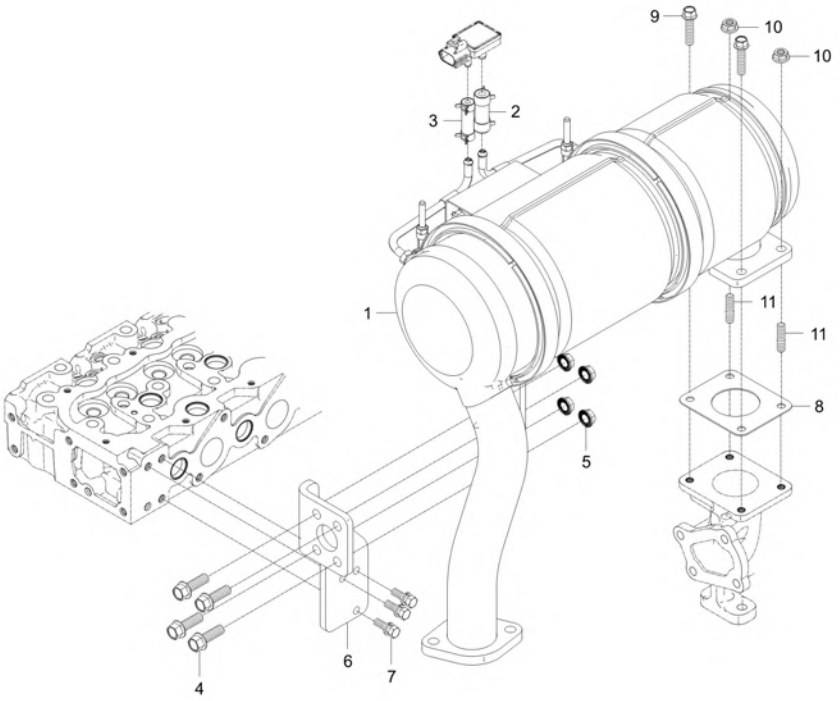

A : CK3510SEB

No.	Part Number	Description	Qty A	Qty B	Qty C	Qty D	Qty E	I.C	Remark
1	F5850-25101	CCRT ASSY	1						-
2	F6800-26661	TUBE, 1	1						
3	F6800-26671	TUBE, 2	1						
4	01133-51032	BOLT	4						M10*P1.25
5	02783-50100	FLANGE NUT	4						M10XP1.25
6	F5830-25423	BRACKET	1						T=8.0
7	01123-50822	WASHER BOLT	3						M8XP1.25
8	F6800-12371	GASKET, TURBOCHARGER FLANGE	1						
9	F6800-92411	FLANGEBOLT	2						M8x1.25 25mm
10	F6800-91911	U-NUT	2						-
11	F6800-92441	BOLT, STUD	2						

----> Old replace New
<---- New replace Old
<-X-> Not interchangeable
<---> Interchangeable
<-O-> Interchangeable with another part(s)
* Please place an order assy(*)

https://tractormanualz.com/

EF3-G133001

LABEL GROUP

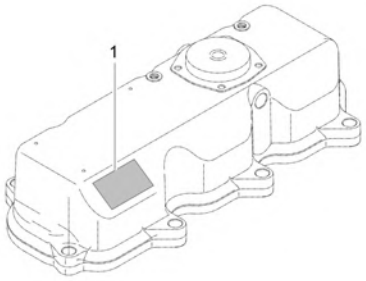

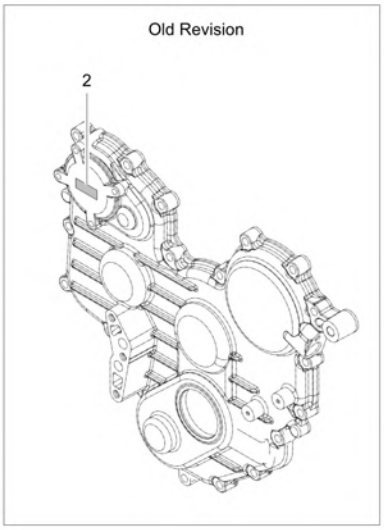

A : CK3510SEB

No.	Part Number	Description	Qty A	Qty B	Qty C	Qty D	Qty E	I.C	Remark
1	F6805-99521	LABEL KIOTI	1						T=0.05-0.08
1	E5608-99522	LABEL KIOTI	1					<------	
2	EF15-0005A	LABEL, FIE SYSTEM	1						

----> Old replace New
<---> Interchangeable
* Please place an order assy(*)
<---- New replace Old
<-O-> Interchangeable with another part(s)
<-X-> Not interchangeable

https://tractormanualz.com/

EF3-G133501

ELECTRICAL PARTS GROUP

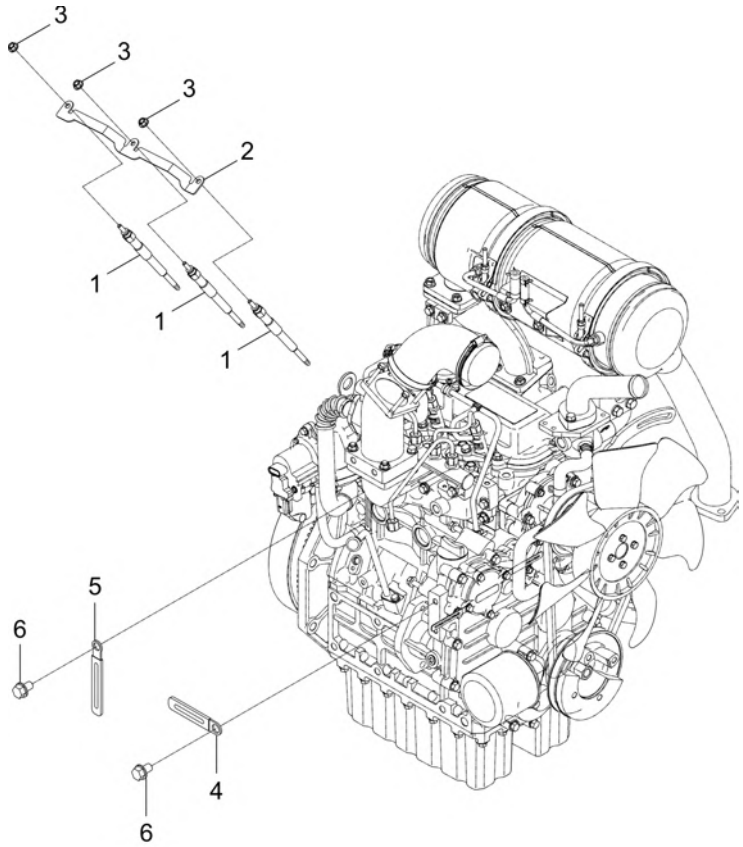

A : CK3510SEB

No.	Part Number	Description	Qty A	Qty B	Qty C	Qty D	Qty E	I.C	Remark
1	F6800-65511	PLUG,GLOW	3						N
2	F5800-65561	CORD,GLOW PLUG	1						
3	02761-50040	NUT, FLANGE	3						
4	37155-3447-1	CLAMP,CORD	1						-
5	37150-3447-1	WIR'G CLAMP	1						T0.5
6	01754-50812	BOLT, FLANGE	2						M8XP1.25

----> Old replace New
<---- New replace Old
<-X-> Not interchangeable
<---> Interchangeable
<-O-> Interchangeable with another part(s)
* Please place an order assy(*)

https://tractormanualz.com/

EH3-G181005

LABEL GROUP

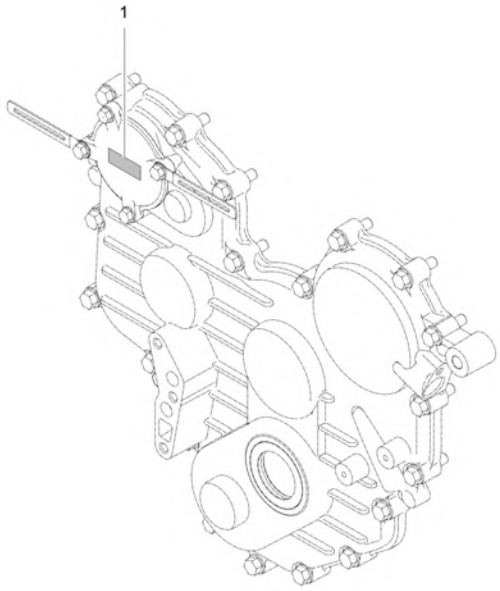

A : CK3510SEB

No.	Part Number	Description	Qty A	Qty B	Qty C	Qty D	Qty E	I.C	Remark
1	EF15-0005B	LABEL, FIE SYSTEM	1						

----> Old replace New
<----> Interchangeable
* Please place an order assy(*)
<---- New replace Old
<-O-> Interchangeable with another part(s)
<-X-> Not interchangeable

https://tractormanualz.com/

TC2-G118008

ENGINE LABEL GROUP

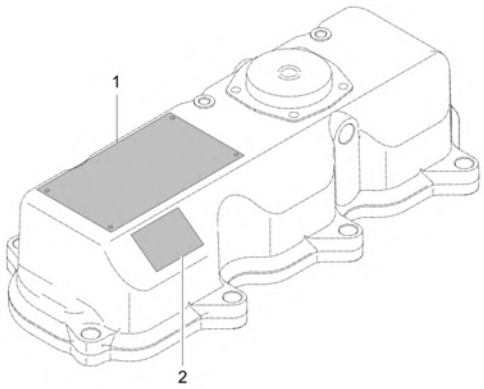

A : CK3510SEB

No.	Part Number	Description	Qty A	Qty B	Qty C	Qty D	Qty E	I.C	Remark
1	EH38-0005A	LABEL, EPA CERTIFICATE-(KIOTI)	1						
1	EH38-0005B	LABEL, EPA CERTIFICATE-(KIOTI)	1					<------	
2	F6805-99521	LABEL KIOTI	1						T=0.05-0.08
2	E5608-99522	LABEL KIOTI	1					<------	

----> Old replace New
<---- New replace Old
<-X-> Not interchangeable
<---> Interchangeable
<-O-> Interchangeable with another part(s)
* Please place an order assy(*)

https://tractormanualz.com/

EF3-G120001

INTAKE HOSE GROUP

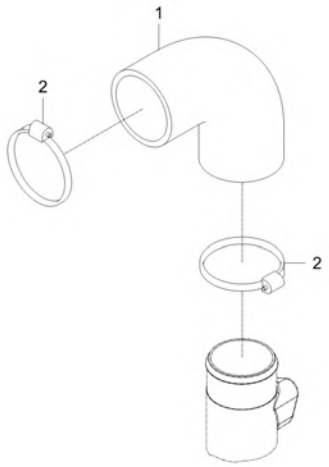

A : CK3510SEB

No.	Part Number	Description	Qty A	Qty B	Qty C	Qty D	Qty E	I.C	Remark
1	EF36-0013A	TUBE, INTAKE	1						T=5
2	F6800-91822	HOSE CLAMP	2						

----> Old replace New
<---> Interchangeable
* Please place an order assy(*)
<---- New replace Old
<-O-> Interchangeable with another part(s)
<-X-> Not interchangeable

https://tractormanualz.com/

EF3-G125002

COOLING FAN GROUP

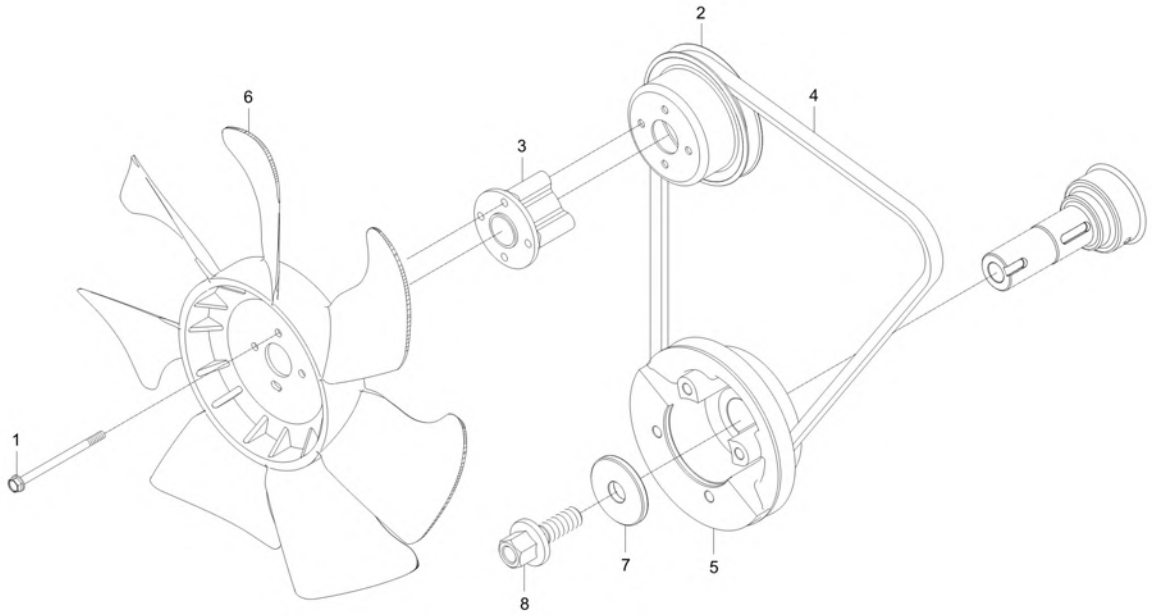

A : CK3510SEB

No.	Part Number	Description	Qty A	Qty B	Qty C	Qty D	Qty E	I.C	Remark
1	01023-50665	BOLT, WASHER	4						MEX10*76
2	E5616-74252ED	PULLEY, FAN	1						
3	E6850-74151	COLLAR,FAN	1						
4	E6857-72531	BELT,FAN	1						
4	EH16-0008A	BELT, FAN-GREEN-1 LA42.5	1					<------	REC GREEN -1 LA42.5
5	EF36-0019A	PULLEY, CRANKSHAFT	1						
6	EF36-0024A	FAN, COOLING	1						
7	F6800-23501	CRANKSHAFT WASHER	1						-
8	F6800-92311	BOLT, CRANKSHAFT	1						-

----> Old replace New
<---- New replace Old
<-X-> Not interchangeable
<---> Interchangeable
<-O-> Interchangeable with another part(s)
* Please place an order assy(*)

https://tractormanualz.com/

EF3-G126001

COOLING FAN(CAB) GROUP

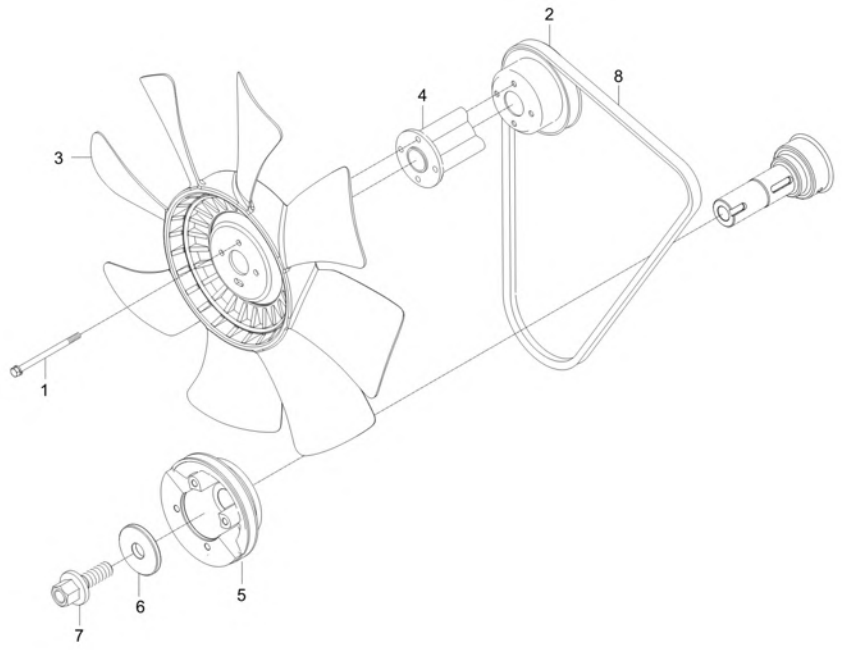

A : CK3510SEB

No.	Part Number	Description	Qty A	Qty B	Qty C	Qty D	Qty E	I.C	Remark
1	01023-50680	BOLT v	4						
2	E5616-74252ED	PULLEY, FAN	1						
3	E5629-74111	COOLING FAN v	1						
4	E5850-74151	COLLAR,FAN	1						
5	EF36-0019A	PULLEY, CRANKSHAFT	1						
6	F6800-23501	CRANKSHAFT WASHER	1						-
7	F6800-92311	BOLT, CRANKSHAFT	1						-
8	E6857-72531	BELT,FAN	1						
8	EH16-0008A	BELT, FAN-GREEN-1 LA42.5	1					<------	REC GREEN -1 LA42.5

----> Old replace New
<---- New replace Old
<-X-> Not interchangeable
<---> Interchangeable
<-O-> Interchangeable with another part(s)
* Please place an order assy(*)

https://tractormanualz.com/

EF3-G132002

EPA LABEL GROUP

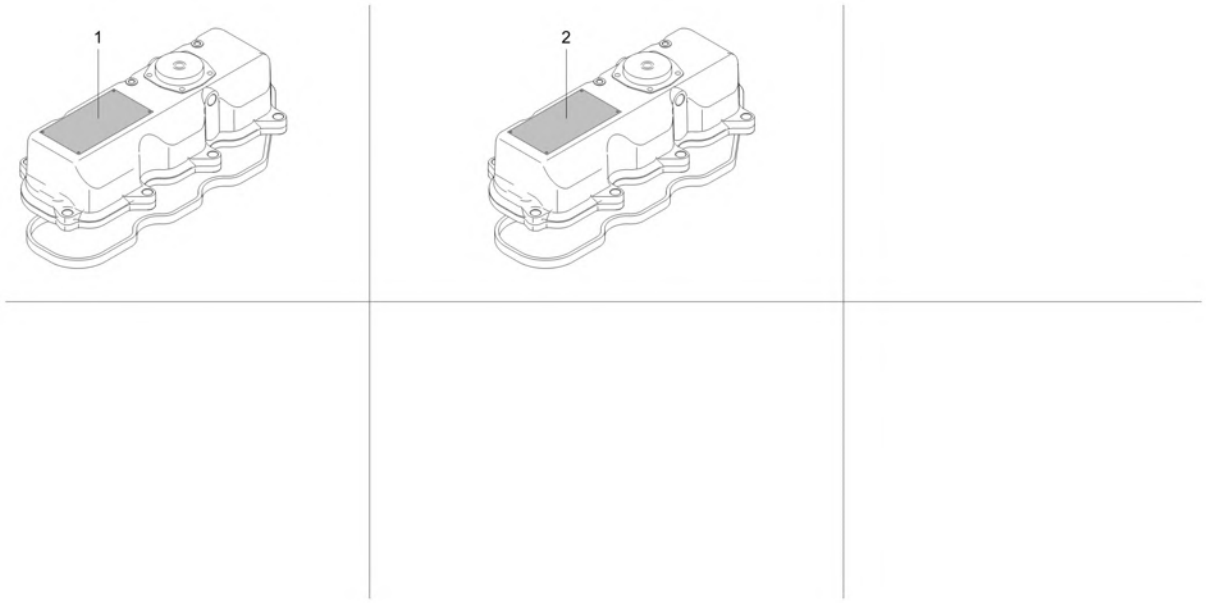

A : CK3510SEB

No.	Part Number	Description	Qty A	Qty B	Qty C	Qty D	Qty E	I.C	Remark
1	EF36-0001C	LABEL, EPA CERTIFICATE dnr v	1						
1	EF36-0001D	LABEL, EPA CERTIFICATE v	1					<------	
1	EF36-0001E	LABEL, EPA CERTIFICATE	1					<------	
2	EF36-0002C	LABEL, EPA CERTIFICATE dnr v	1 UJJ700001 ~ TJJ700030						
2	EF36-0002D	LABEL, EPA CERTIFICATE v	1 UJJ700001 ~ UJJ700236					<------	
2	EF36-0002E	LABEL, EPA CERTIFICATE v	1 VJJ700001 ~ VJJ700016					<------	

----> Old replace New
<---- New replace Old
<-X-> Not interchangeable
<---> Interchangeable
<-O-> Interchangeable with another part(s)
* Please place an order assy(*)

https://tractormanualz.com/

EH3-G111001

CYLINDER BLOCK GROUP

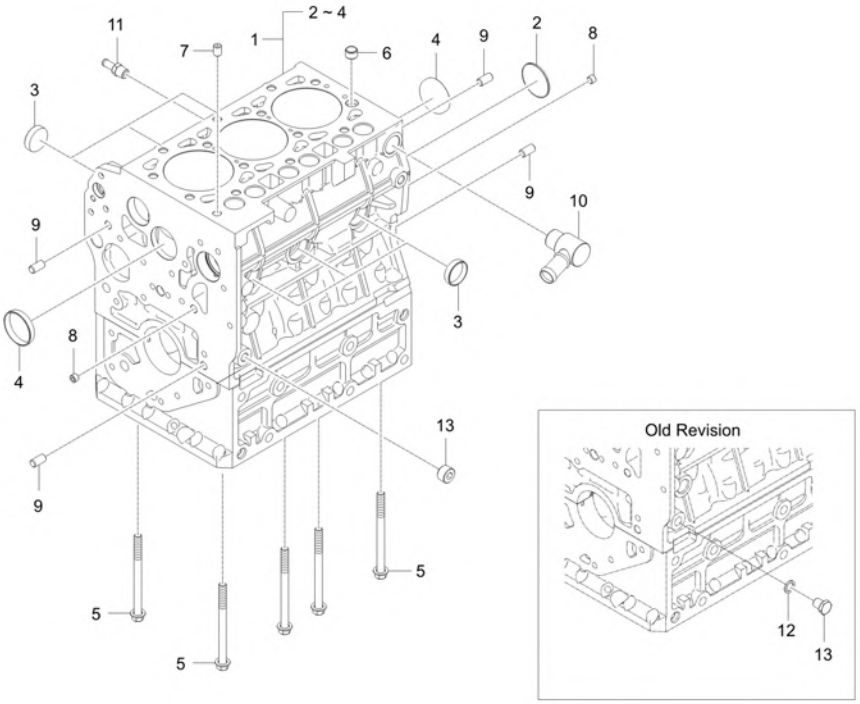

A : CK3510SEB

No.	Part Number	Description	Qty A	Qty B	Qty C	Qty D	Qty E	I.C	Remark
1	EH31-0001A	ASSY BLOCK,CYLINDER	1						
1	EH31-0001B	ASSY BLOCK,CYLINDER	1					<--O-->	
2	06311-75045	PLUG	1						T2*48*48
3	15221-0338-3	CAP, SEALING	6						-
4	15221-0339-2	CAP SEALING	2						-
5	F6800-90121	BOLT, LADDER FRAME	8						-
6	E6301-33812	PIN, PIPE	1						N
7	F6800-33651	PIN	1						-
8	E5900-96022	PLUG	4						-
9	05012-01018	PIN, STRAIGHT	2						
10	F6800-20703	COOLANT CONNECTOR ASSY	1						-
11	F6800-73341	JOINT, HOSE	1						
12	04724-00120	PACKING	1						T2.0
13	F5850-24401	PLUG	1						
13	E5900-96032	PLUG	1					<--O-->	

----> Old replace New
<---- New replace Old
<-X-> Not interchangeable
<---> Interchangeable
<-O-> Interchangeable with another part(s)
* Please place an order assy(*)

https://tractormanualz.com/

EH3-G113001

CYLINDER HEAD GROUP

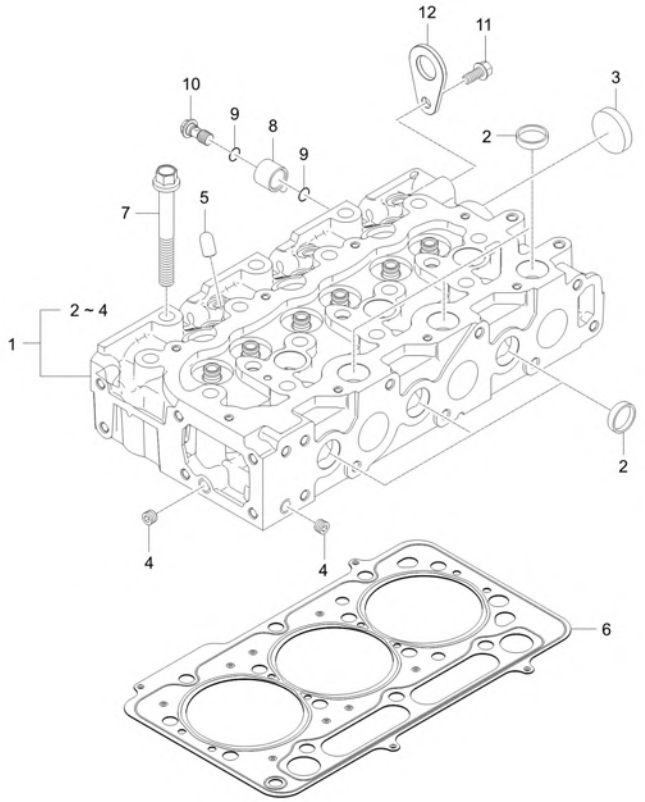

A : CK3510SEB

No.	Part Number	Description	Qty A	Qty B	Qty C	Qty D	Qty E	I.C	Remark
1	F5800-03044	ASSY HEAD,CYLINDER	1						
2	15221-0337-3	CAP SEALING	9						T1.6*40*40
3	15221-0349-3	CAP SEALING	1						T1.6*60*60
4	E5900-96022	PLUG	2						-
5	F6800-03501	HINGE, INJECTOR CLAMP	3						
6	F5800-03311	GASKET,HEAD	1						
7	F6800-03451	BOLT,CYLINDER HEAD	14						
8	F5850-73341	CONNECTOR, COOLANT	1						
9	04814-00160	O RING	2						
10	T4260-62552	JOINT BOLT	1						
11	01754-50816	BOLT, FLANGE	1						M8XP1.25
12	15221-0175-1	ENGINE HOOK	1						T4*40*64

----> Old replace New <---- New replace Old <-X-> Not interchangeable
<---> Interchangeable <-O-> Interchangeable with another part(s)
* Please place an order assy(*)

https://tractormanualz.com/

EH3-G114001

GEAR CASE GROUP

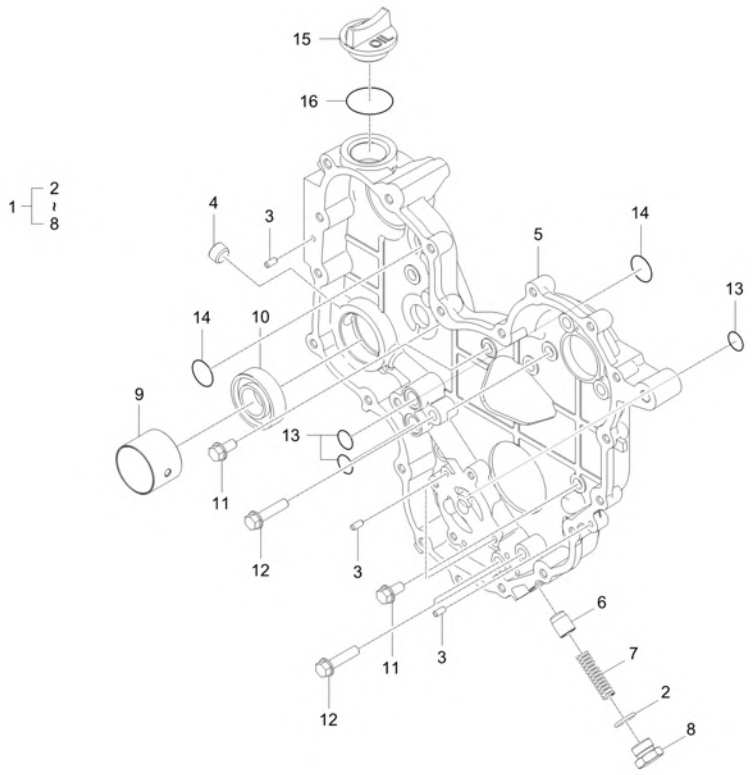

A : CK3510SEB

No.	Part Number	Description	Qty A	Qty B	Qty C	Qty D	Qty E	I.C	Remark
1	F5850-04105	ASSY CASE,GEAR	1						
1	F5850-04106	ASSY CASE,GEAR	1					<----->	
2	04811-00160	O RING	1						DIA15.8
3	05012-00510	PIN,STRAIGHT	4						
4	E5800-96032	PLUG	1						PT3/8
5	F5800-04115	GEAR CASE	1						-
5	F5800-04116	GEAR CASE	1					<----->	-
6	F6720-04711	PLUNGER, RELIEF VALVE v	1						N
6	F6720-04712	PLUNGER, RELIEF VALVE	1					<----->	-
7	F6720-04721	SPRING, RELIEF VALVE	1						DIA1.8
8	F6720-04731	PLUG, RELIEF VALVE v	1						N
9	F6800-04501	BUSH, PTO SHAFT	1						
10	08101-06205	BEARING BALL dnr v	1						DIA25
11	01754-50816	BOLT, FLANGE	10						M8XP1.25
12	01754-50835	BOLT v	3						
13	04816-00150	O_RING	3						DIA14.8
14	04816-00220	O_RING dnr v	2						DIA21.8
15	E5500-33142	PLUG, OIL FILLER	1						

----> Old replace New
<---- New replace Old
<-X-> Not interchangeable
<---> Interchangeable
<-O-> Interchangeable with another part(s)
* Please place an order assy(*)

https://tractormanualz.com/

EH3-G114001

GEAR CASE GROUP

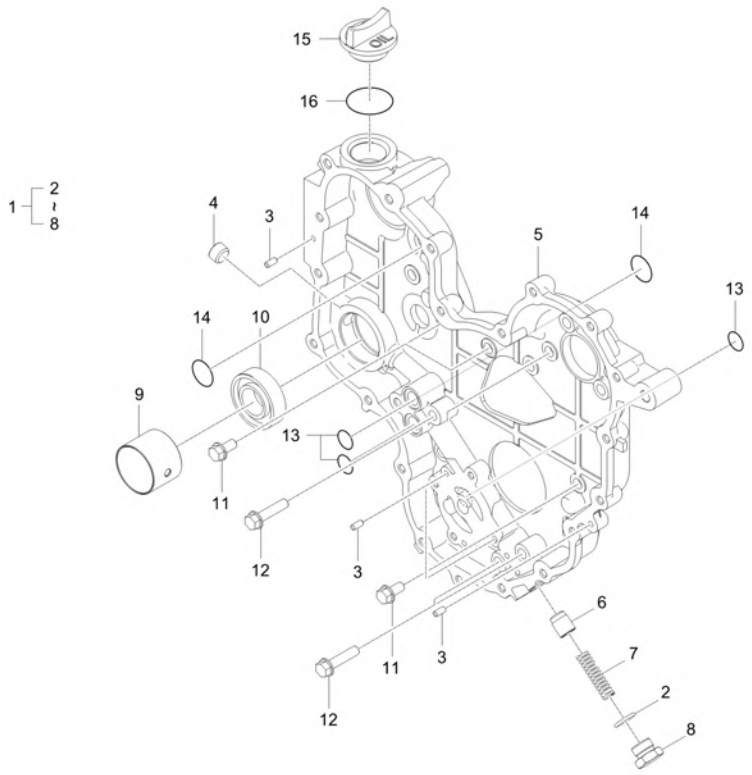

A : CK3510SEB

No.	Part Number	Description	Qty A	Qty B	Qty C	Qty D	Qty E	I.C	Remark
16	04811-50300	O RING v	1						G30

----> Old replace New
<----> Interchangeable
* Please place an order assy(*)
<---- New replace Old
<-O-> Interchangeable with another part(s)
<-X-> Not interchangeable

https://tractormanualz.com/

EH3-G115001

GEAR CASE COVER GROUP

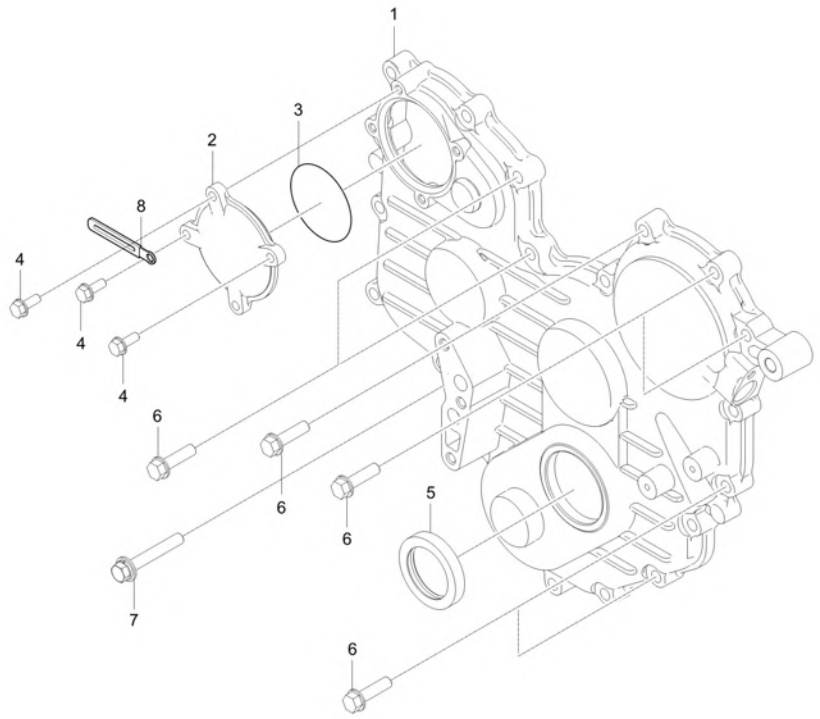

A : CK3510SEB

No.	Part Number	Description	Qty A	Qty B	Qty C	Qty D	Qty E	I.C	Remark
1	F6800-04215	COVER, GEAR CASE v	1						-
2	F6800-04251	COVER, HP PUMP GEAR	1						
3	04811-06630	O RING	1						Dia63
4	01754-50616	BOLT, FLANGE v	4						M6*P1.0
5	E5500-11302	OIL SEAL	1						
6	01754-50830	BOLT FLANGE	20						M8*P1.25
7	01125-50855	BOLT	1						
8	34150-2939-1	CLAMP, WIRE	2						-
8	34150-2939-1	CLAMP, WIRE	1					<----->	-

----> Old replace New
<---- New replace Old
<-X-> Not interchangeable
<---> Interchangeable
<-O-> Interchangeable with another part(s)
* Please place an order assy(*)

https://tractormanualz.com/

EH3-G116001

CYLINDER HEAD COVER GROUP

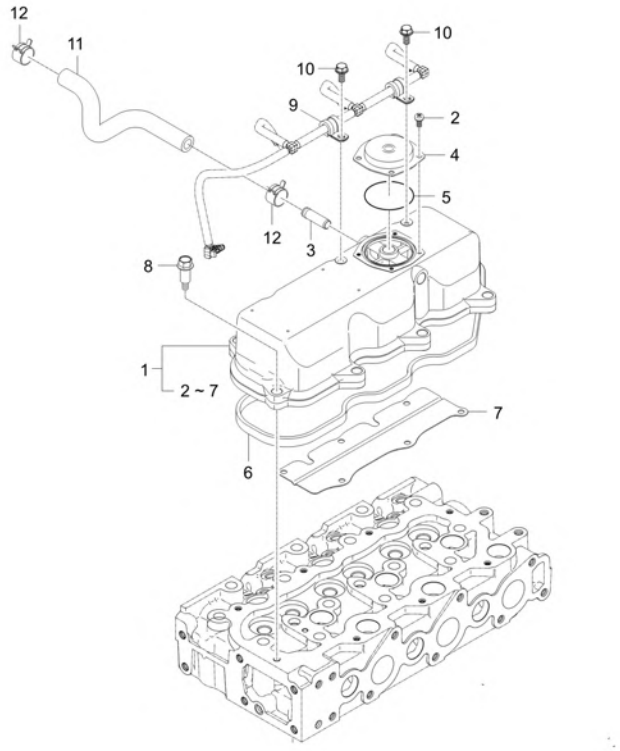

A : CK3510SEB

No.	Part Number	Description	Qty A	Qty B	Qty C	Qty D	Qty E	I.C	Remark
1	F5850-14501	CYLINDER HEAD COVER ASSEMBLY v	1						
2	03024-50510	SCREW, WASHER	4						M5*P0.8
3	E6510-05552	CONNECTOR, AIR BREATHER HOSE	1						N
4	E6510-14532	COVER, VALVE	1						N
5	E6510-14671	O RING	1						N
6	F5800-14521	GASKET, CYLINDER HEAD COVER	1						
7	F5800-14561	PROTECT PLATE OF OIL	1						
8	E6510-33661	BOLT, CYLINDER HEAD COVER v	8						
9	F6800-15122	CLAMP, HOSE	2						
10	01754-50610	BOLT, FLANGE	2						M6XP1.0
11	F5850-05511	HOSE, BLOW BY	1						N
12	09318-88180	CLAMP, HOSE	2						

----> Old replace New
<---- New replace Old
<-X-> Not interchangeable
<---> Interchangeable
<-O-> Interchangeable with another part(s)
* Please place an order assy(*)

https://tractormanualz.com/

EH3-G118001

REAR PLATE GROUP

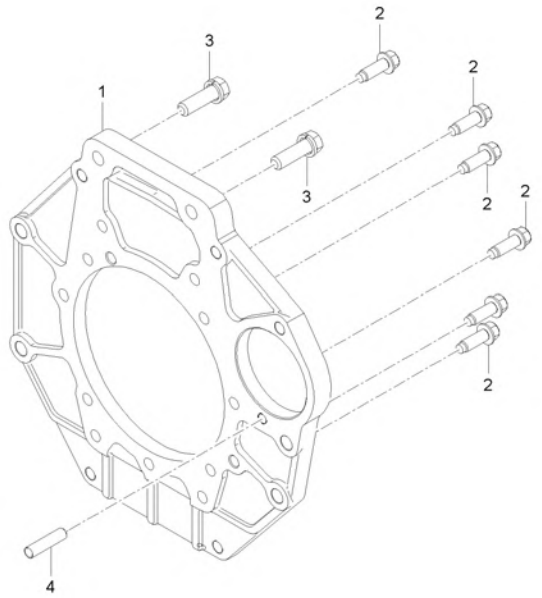

A : CK3510SEB

No.	Part Number	Description	Qty A	Qty B	Qty C	Qty D	Qty E	I.C	Remark
1	F5850-04612	PLATE	1						
2	EF11-0001A	BOLT,FLANGEWITHPIN	11						HRC20-28
3	01133-51240	BOLT, WASHER	2						M12XP1.25
4	01517-51028	STUD	1						M10XP1.25

----> Old replace New
<---- New replace Old
<-X-> Not interchangeable
<---> Interchangeable
<-O-> Interchangeable with another part(s)
* Please place an order assy(*)

https://tractormanualz.com/

EH3-G121001

CRANK SHAFT GROUP

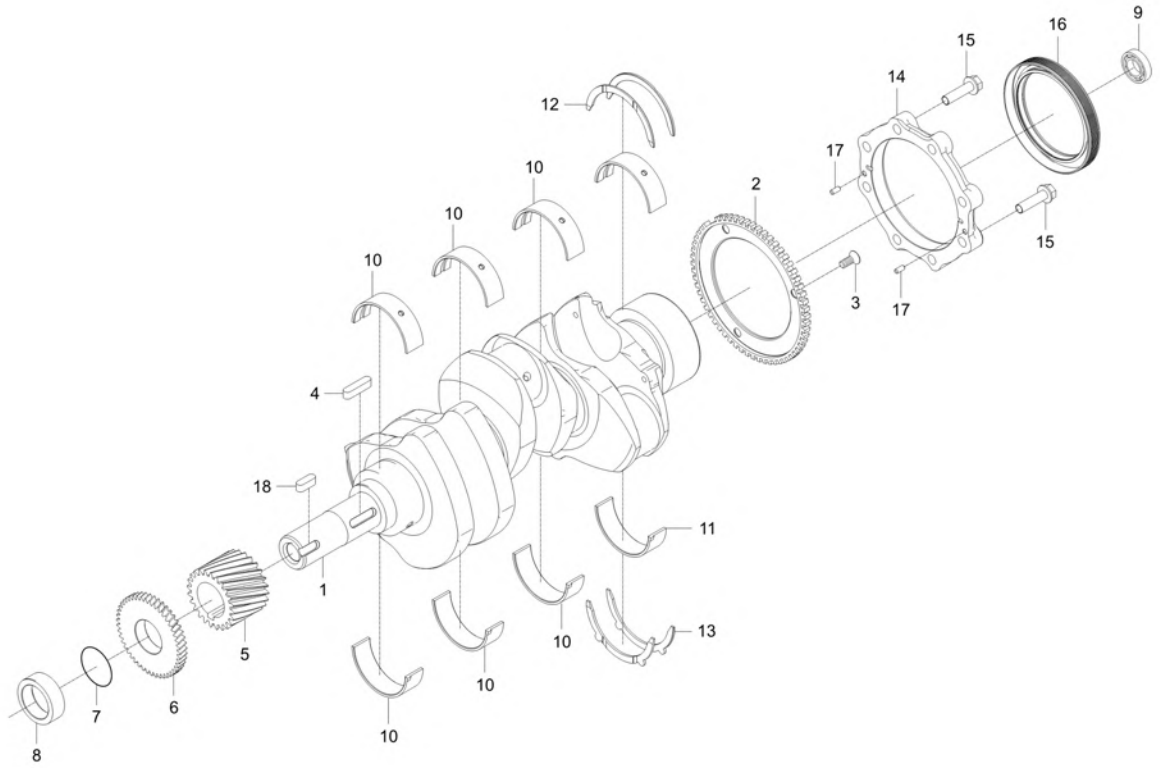

A : CK3510SEB

No.	Part Number	Description	Qty A	Qty B	Qty C	Qty D	Qty E	I.C	Remark
1	F5800-23111	SHAFT CRANK dnr v	1						
2	F5800-06201	WHEEL, CRANK POSITION SENSOR	1						
3	03016-50616	SCREW	3						M6XP1.0
4	05712-00730	KEY	1						W7XL30
5	F6800-24111	CRANKSHAFT GEAR	1						
6	F6800-35631	GEAR OIL PUMP DRIVE	1						
7	04811-10300	O RING	1						
8	19202-2325-2	SPACER	1						DIA44*20
9	08121-06002	BEARING,BALL	1						#6002ZZ
10	F6800-23481	BEARING, CRANKSHAFT UPR	4						
11	F6800-23491	BEARING, CRANKSHAFT LWR	4						
12	F6800-23531	BEARING, CRANKSHAFT THRUST UPR	2						
13	F6800-23541	BEARING, CRANKSHAFT THRUST LWR	2						
14	F6800-04811	CASE,OIL SEAL	1						
15	01654-50830	FLANGE BOLT	8						7T
16	E5500-04464	OIL SEAL v	1						
17	05012-00408	STRAIGHT PIN	2						
18	05712-00720	KEY	1						8*8*24

----> Old replace New <---- New replace Old <-X-> Not interchangeable
<---> Interchangeable <-O-> Interchangeable with another part(s)
* Please place an order assy(*)

https://tractormanualz.com/

EH3-G122001

PISTON_CONNECTING ROD GROUP

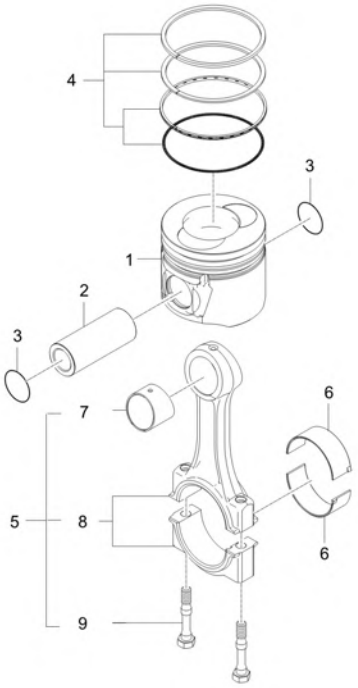

A : CK3510SEB

No.	Part Number	Description	Qty A	Qty B	Qty C	Qty D	Qty E	I.C	Remark
1	F5850-21112	PISTON	3						-
2	F5800-21311	PIN, PISTON	3						N
3	F5800-21331	RING, SNAP	6						N
4	E6302-21051	PISTON RING Assy	3						
5	F6800-22011	CONNECTING ROD	3						
6	EF15-0004A	BEARING, CONNECTING ROD	6						
7	F6800-21351	BUSH,PISTON PIN	1						
8	F6800-22111	CONNECTINGROD	1						N
9	F6800-22141	BOLT	2						N

----> Old replace New
<---- New replace Old
<-X-> Not interchangeable
<---> Interchangeable
<-O-> Interchangeable with another part(s)
* Please place an order assy(*)

https://tractormanualz.com/

EH3-G123001

CAMSHAFT GROUP

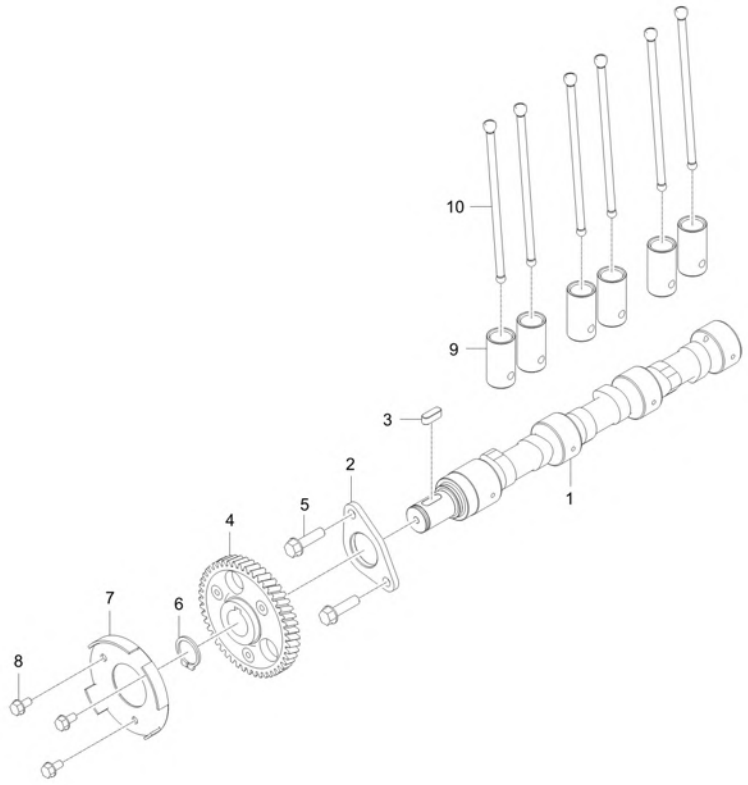

A : CK3510SEB

No.	Part Number	Description	Qty A	Qty B	Qty C	Qty D	Qty E	I.C	Remark
1	F5800-16012	ASSY CAMSHAFT v	1						N
2	F6800-16271	STOP, CAM SHAFT	1						
3	05712-00720	KEY	1						8*8*24
4	F6800-16511	CAMSHAFT GEAR	1						
5	01754-50830	BOLT FLANGE	2						M8*P1.25
6	E5205-24321	SNAP RING	1						T2
7	F6800-09051	WHEEL, CAMSHAFT SENSOR	1						2T
8	01754-50612	BOLT, FLANGE	3						M6*1.0
9	E5500-15553	TAPPET	6						DIA26*51
10	F6800-15111	ROD PUSH v	6						

----> Old replace New
<----> Interchangeable
* Please place an order assy(*)
<---- New replace Old
<-O-> Interchangeable with another part(s)
<-X-> Not interchangeable

https://tractormanualz.com/

EH3-G124001

IDLE GEAR GROUP

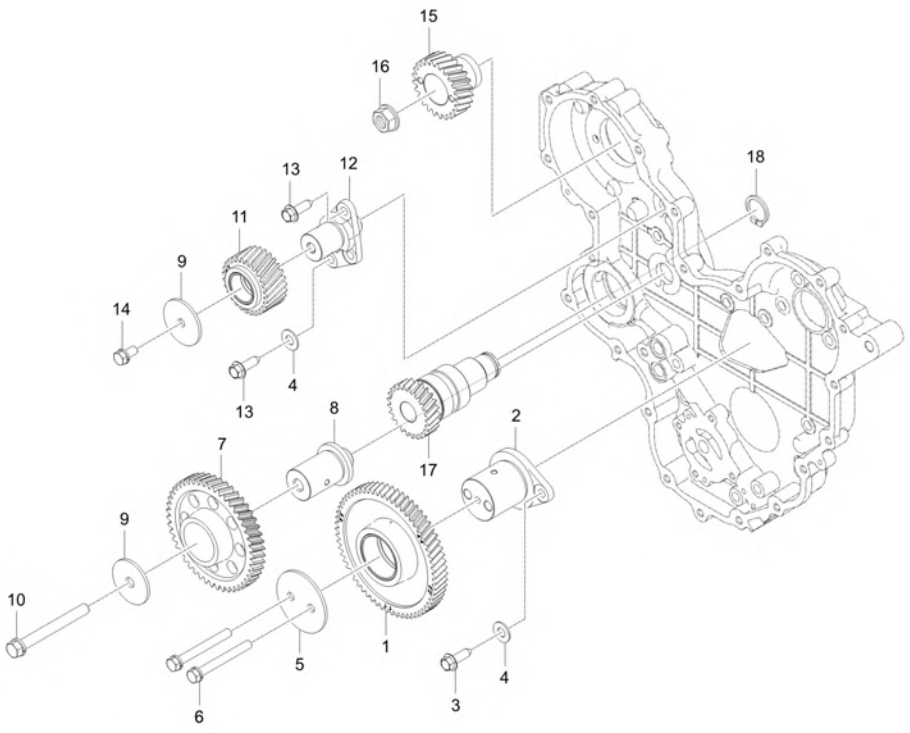

A : CK3510SEB

No.	Part Number	Description	Qty A	Qty B	Qty C	Qty D	Qty E	I.C	Remark
1	F5850-10102	Assy IDLE GEAR1	1						-
2	F6800-10155	SHAFT,IDLEGEAR1 v	1						-
3	EF15-0030A	FLANGE BOLT v	2						
4	EF15-0029A	NORD-LOCK WASHER v	3						
5	F6800-10163	STOPPER 1, IDLE GEAR	1						-
6	01123-50870	WASHER BOLT	2						
7	F6800-10301	IDLE GEAR ASSY, 3	1						
8	F6800-10353	SHAFT 3, IDLE GEAR v	1						-
9	F6800-10261	STOPPER, IDLE GEAR 2	2						
10	01133-51090	BOLT	1						P1.25
11	F6800-10401	IDLE GEAR ASSY, 4	1						
12	F6800-10455	SHAFT,IDLEGEAR4 v	1						-
13	EF15-0038A	BOLT, FLANGE	3						-
14	EF15-0039A	BOLT, WITH WASHER	1						-
15	EH32-0001A	GEAR, HP FUEL PUMP	1						-
16	F6800-92771	FLANGE NUT	1						M14x1.5
17	F6800-10612	GEAR, HYDRAULIC PUMP DRIVE	1						-
18	15471-9536-1	SNAP_RING	1						

----> Old replace New
<----> Interchangeable
* Please place an order assy(*)
<---- New replace Old
<-O-> Interchangeable with another part(s)
<-X-> Not interchangeable

https://tractormanualz.com/

EH3-G125001

ROCKER ARM_VALVE GROUP

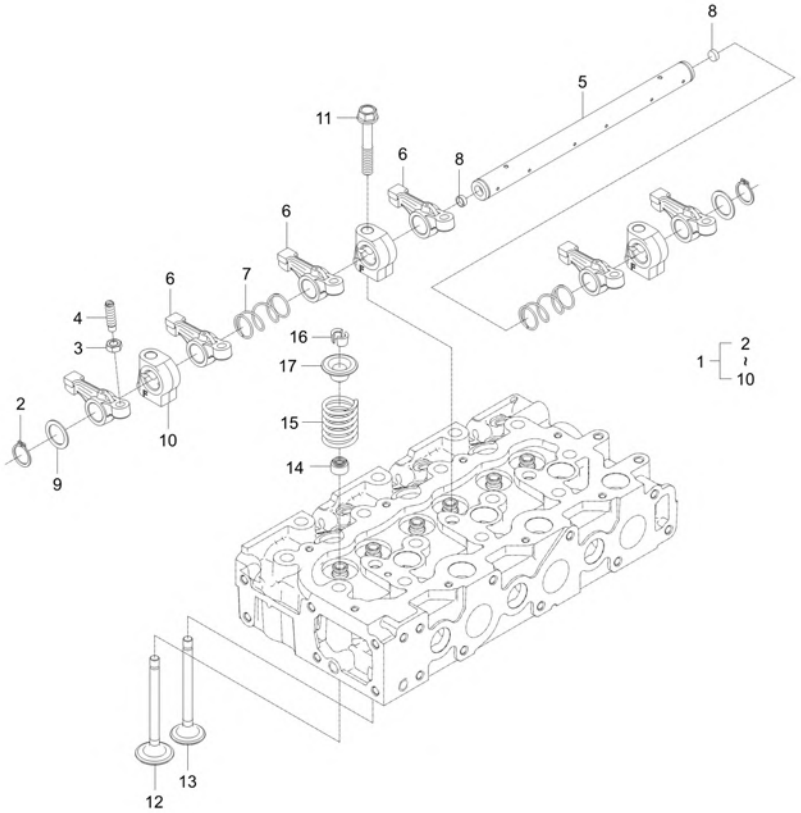

A : CK3510SEB

No.	Part Number	Description	Qty A	Qty B	Qty C	Qty D	Qty E	I.C	Remark
1	F5800-14001	ASSY ARM,ROCKER	1						
2	04612-00190	SNAP RING	2						
3	15021-1424-1	NUT	6						HEX12,M8*1.0*11
4	E5500-14232	SCREW,ADJUSTING	6						DIA10,M8*1.0*34
5	E5800-14261	SHAFT,ROCKER ARM	1						
6	E6301-14111	ROCKERARM	6						
7	E6301-14311	ROCKERARM SPRING	2						
8	E6301-14331	CAP, SEALING obs v	2						
9	E6301-14431	PLAIN WASHER	2						T1.2*30*30
10	F6800-14351	BRACKET, ROCKER ARM	3						
11	E6510-91502	BOLT,(R/A SUPPORT) v	3						
12	E6700-13111	VALVE, INTAKE	3						
13	E6700-13121	EXHAUST VALVE v	3						
14	E6301-13151	SEAL, VALVE STEM	6						
15	E6400-13241	SPRING, VALVE	6						
16	E6403-13361	COLLET,VALVE SPRING v	12						KK8(독일 TRW)
17	E5500-13333	RETAINER VALVE SPRING v	6						

----> Old replace New <---- New replace Old <-X-> Not interchangeable
<---> Interchangeable <-O-> Interchangeable with another part(s)
* Please place an order assy(*)

https://tractormanualz.com/

EH3-G126001

FLYWHEEL GROUP

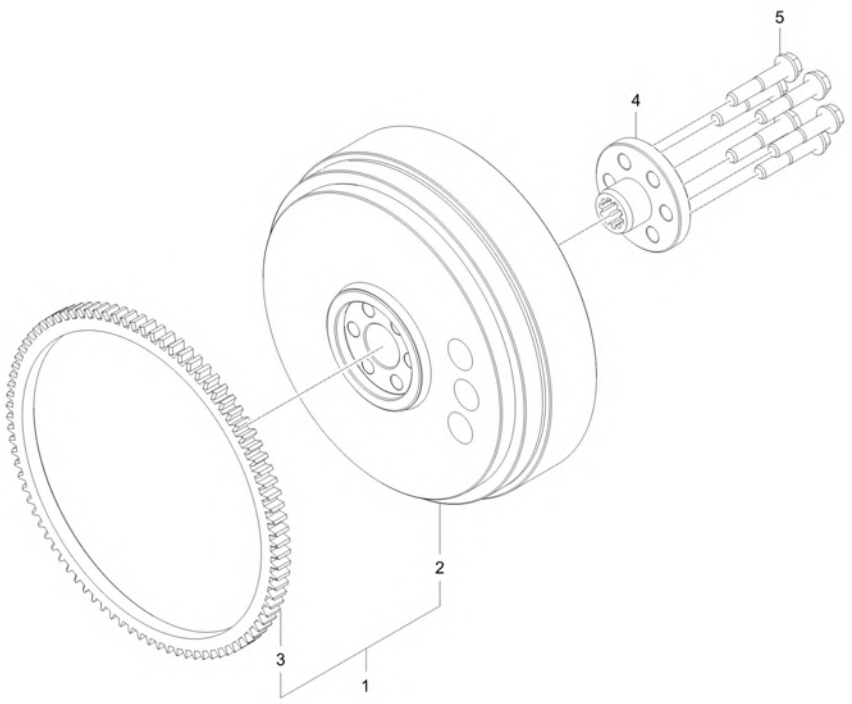

A : CK3510SEB

No.	Part Number	Description	Qty A	Qty B	Qty C	Qty D	Qty E	I.C	Remark
1	EF36-0020B	FLYWHEEL v	1						
1	EF36-0020C	ASSY FLYWHEEL	1					<----->	
2	EF36-0021B	FLYWHEEL	1						
2	EF36-0021C	FLYWHEEL	1					<----->	
3	E7103-63821	GEAR RING (use 15221-63824) dnr v	1						
4	E5800-25182	HUB, SPLINE	1						
5	E5800-25161	BOLT, FLYWHEEL	6						

----> Old replace New
<---> Interchangeable
* Please place an order assy(*)
<---- New replace Old
<-O-> Interchangeable with another part(s)
<-X-> Not interchangeable

https://tractormanualz.com/

EH3-G127001

CRANK SHAFT FULLEY GROUP

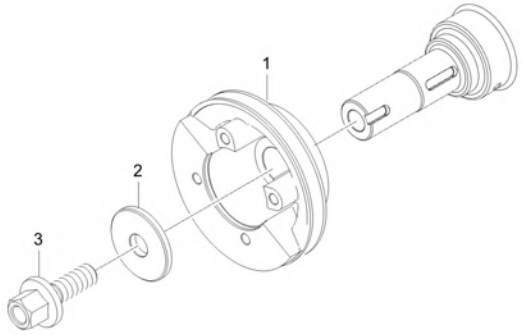

A : CK3510SEB

No.	Part Number	Description	Qty A	Qty B	Qty C	Qty D	Qty E	I.C	Remark
1	EF36-0019A	PULLEY, CRANKSHAFT	1						
2	F6800-23501	CRANKSHAFT WASHER	1						-
3	F6800-92311	BOLT, CRANKSHAFT	1						-

----> Old replace New
<----> Interchangeable
* Please place an order assy(*)
<---- New replace Old
<-O-> Interchangeable with another part(s)
<-X-> Not interchangeable

https://tractormanualz.com/

EH3-G131001

INTAKE MANIFOLD GROUP

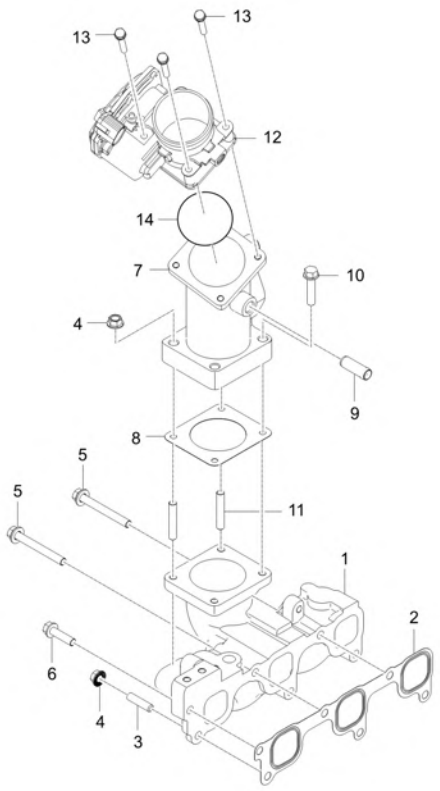

A : CK3510SEB

No.	Part Number	Description	Qty A	Qty B	Qty C	Qty D	Qty E	I.C	Remark
1	EH23-0002B	MANIFOLD, INLET	1						-
2	F5800-11821	GASKET, INTAKE MANIFOLD	1						
3	01513-50822	STUD	1						M8*1.25
4	02763-50080	FLANGE NUT	3						M8XP1.25
5	01125-50870	BOLT, WASHER	2						
6	01754-50830	BOLT FLANGE	3						M8*P1.25
7	EF36-0012A	FLANGE, INTAKE MANIFOLD	1						
8	F6800-17211	GASKET, INTAKE MANIFOLD FLANGE	1						
9	E6510-05552	CONNECTOR, AIR BREATHER HOSE	1						N
10	01754-50835	BOLT v	2						
11	01513-50835	STUD	4						
12	F6800-17701	AIR CONTROL VALVE ASSY	1						
13	01023-50645	BOLT, WASHER v	4						
14	EH13-0002A	O RING-ACV v	1						

----> Old replace New
<---> Interchangeable
* Please place an order assy(*)
<---- New replace Old
<-O-> Interchangeable with another part(s)
<-X-> Not interchangeable

https://tractormanualz.com/

EH3-G132001

INTAKE HOSE GROUP

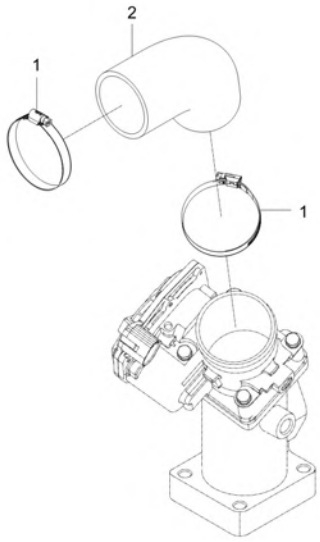

A : CK3510SEB

No.	Part Number	Description	Qty A	Qty B	Qty C	Qty D	Qty E	I.C	Remark
1	F6800-91822	HOSE CLAMP	2						
2	EF36-0013A	TUBE, INTAKE	1						T=5

----> Old replace New
<----> Interchangeable
* Please place an order assy(*)
<---- New replace Old
<-O-> Interchangeable with another part(s)
<-X-> Not interchangeable

https://tractormanualz.com/

EH3-G133001

EXHAUST MANIFOLD GROUP

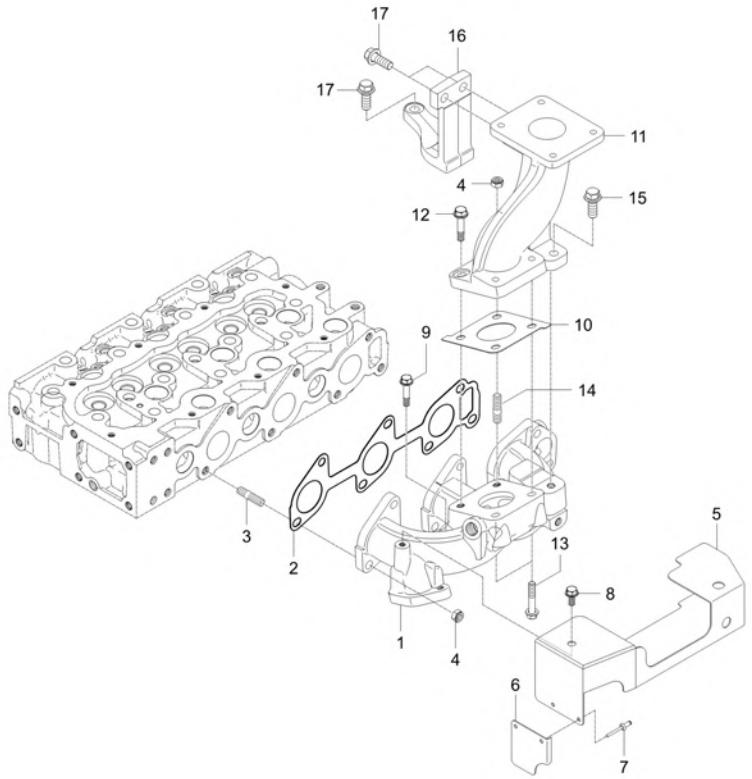

A : CK3510SEB

No.	Part Number	Description	Qty A	Qty B	Qty C	Qty D	Qty E	I.C	Remark
1	F5800-12313	MANIFOLD,EXHAUST	1						
2	F5800-12351	GASKET, EXHAUST MANIFOLD	1						
3	F6800-92451	BOLT, STUD	5						M8*P1.25
3	F6800-92452	BOLT, STUD	5					<------	M8*P1.25
4	F6800-91911	U-NUT	6						-
5	F5800-13764	PLATE,HEAT	1						t1.2
6	F5800-13773	PLATE	1						t1.2
7	F6800-94111	RIVET	2						
8	01754-50610	BOLT, FLANGE	1						M6XP1.0
9	01754-50640	FLANGE BOLT	1						
10	F6800-17101	GASKET 1, TURBOCHARGER	1						
11	F5850-11953	EXHAUST MANIFOLD FLANGE	1						N
12	F6800-92411	FLANGEBOLT	1						M8x1.25 25mm
13	F6800-92421	FLANGEBOLT	2						M8x1.25 65mm
14	F6800-92441	BOLT, STUD	1						
15	01123-50825	BOLT WITH WASHER	1						M8XP1.25
16	F6800-25501	SUPPORT, TURBOCHARGER FLANGE	1						
17	01123-50822	WASHER BOLT	4						M8XP1.25

----> Old replace New <---- New replace Old <-X-> Not interchangeable
<---> Interchangeable <-O-> Interchangeable with another part(s)
* Please place an order assy(*)

https://tractormanualz.com/

EH3-G141001

OIL PUMP GROUP

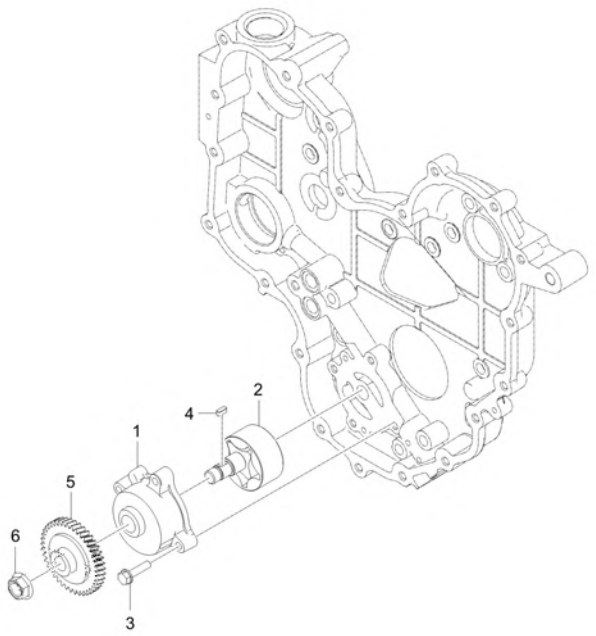

A : CK3510SEB

No.	Part Number	Description	Qty A	Qty B	Qty C	Qty D	Qty E	I.C	Remark
1	F6800-04302	COVER, OIL PUMP	1						-
2	F6800-04401	OIL PUMP ROTOR SHAFT ASSY	1						N
3	01754-50625	BOLT, FLANGE	4						7T
4	05712-00410	KEY	1						5*5*14
5	F6800-35661	GEAR, OIL PUMP	1						-
6	E6300-35681	FLANGE NUT	1						M12*P1.25

----> Old replace New
<----> Interchangeable
* Please place an order assy(*)
<---- New replace Old
<-O-> Interchangeable with another part(s)
<-X-> Not interchangeable

https://tractormanualz.com/

EH3-G142001

OIL PAN GROUP

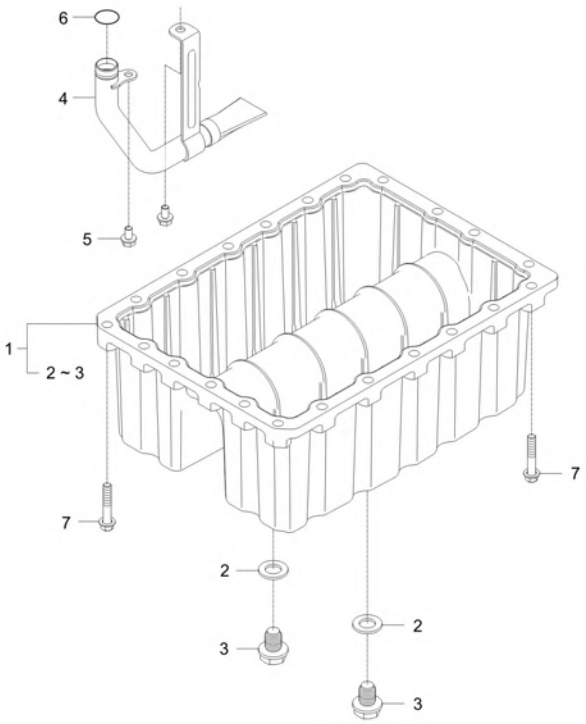

A : CK3510SEB

No.	Part Number	Description	Qty A	Qty B	Qty C	Qty D	Qty E	I.C	Remark
1	F5800-01601	ASSY FAN,OIL v	1						
1	F5800-01602	ASSY FAN,OIL v	1					<------	-
2	E6303-33661	GASKET	2						2.0t
3	E6303-33751	PLUG	2						-
3	E6303-33752	PLUG	2					<------	-
4	F5800-32111	OIL STRAINER ASSY	1						
5	01754-50610	BOLT, FLANGE	2						M6XP1.0
6	04811-00150	O RING v	1						
7	01654-50835	BOLT	22						M8x1.25

----> Old replace New
<---> Interchangeable
* Please place an order assy(*)
<---- New replace Old
<-O-> Interchangeable with another part(s)
<-X-> Not interchangeable

https://tractormanualz.com/

EH3-G143001

OIL GAUGE GROUP

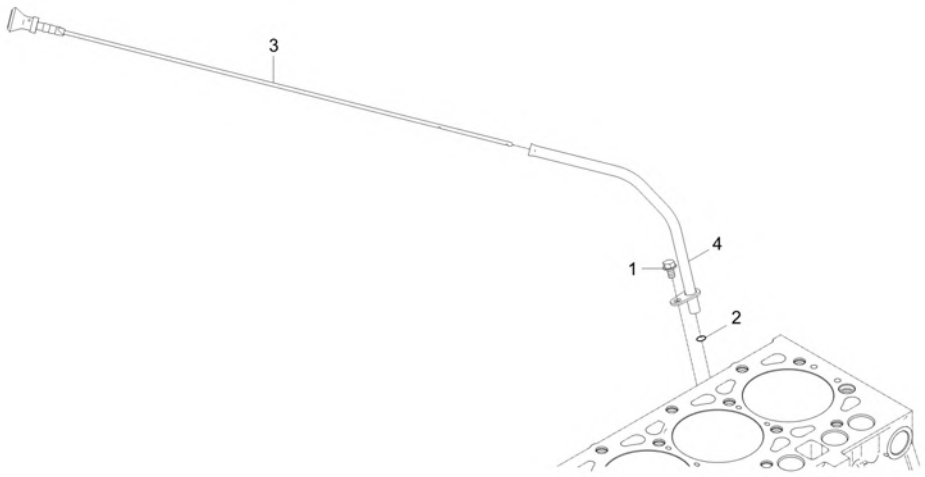

A : CK3510SEB

No.	Part Number	Description	Qty A	Qty B	Qty C	Qty D	Qty E	I.C	Remark
1	01754-50610	BOLT, FLANGE	1						M6XP1.0
2	04811-00100	O RING	1						
3	F5800-36413	GAUGE,OIL	1						-
3	F5800-36414	GAUGE,OIL	1					<----->	-
4	F5800-36422	OIL GAUGE GUIDE ASSY	1						

----> Old replace New
<----> Interchangeable
* Please place an order assy(*)
<---- New replace Old
<-O-> Interchangeable with another part(s)
<-X-> Not interchangeable

https://tractormanualz.com/

EH3-G144001

OIL FILTER GROUP

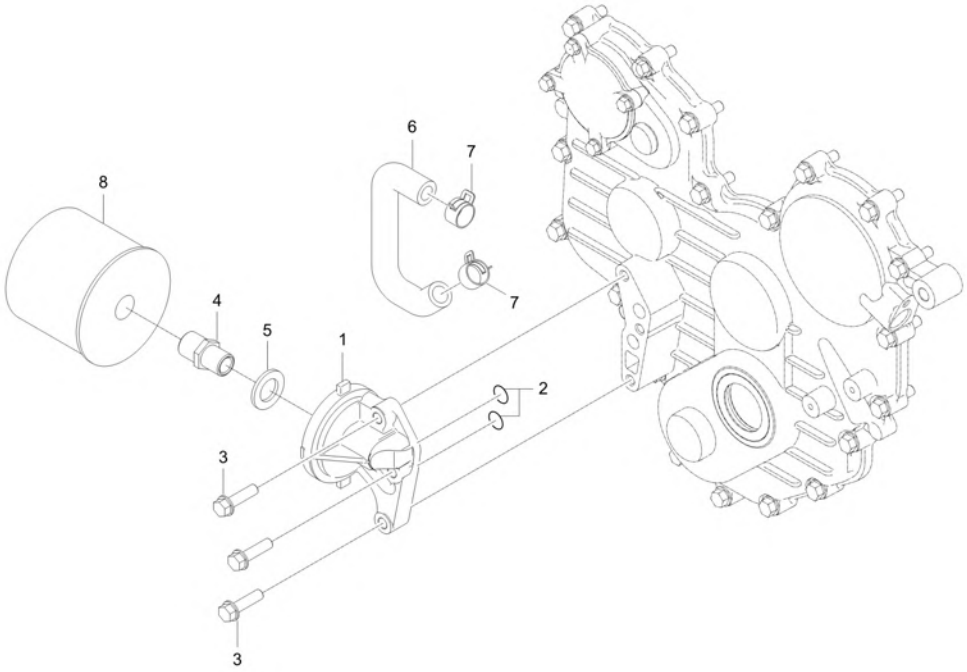

A : CK3510SEB

No.	Part Number	Description	Qty A	Qty B	Qty C	Qty D	Qty E	I.C	Remark
1	E5850-32617	SUPPORT,OIL FILTER	1						-
2	04816-00150	O_RING	2						DIA14.8
3	01754-50830	BOLT FLANGE	3						M8*P1.25
4	15521-3229-1	REAR MOUNT ASSEMBLY	1						HEX24,M20*1.5*47
5	04011-50180	PLAIN WASHER	1						T2.9
6	F5820-16161	HOSE 1, OIL COOLER	1						N
7	09318-88180	CLAMP, HOSE	2						
8	E6201-32443	OIL FILTER sp v	1						

----> Old replace New
<----> Interchangeable
* Please place an order assy(*)
<---- New replace Old
<-O-> Interchangeable with another part(s)
<-X-> Not interchangeable

https://tractormanualz.com/

EH3-G151001

FUEL EQUIPMENT GROUP

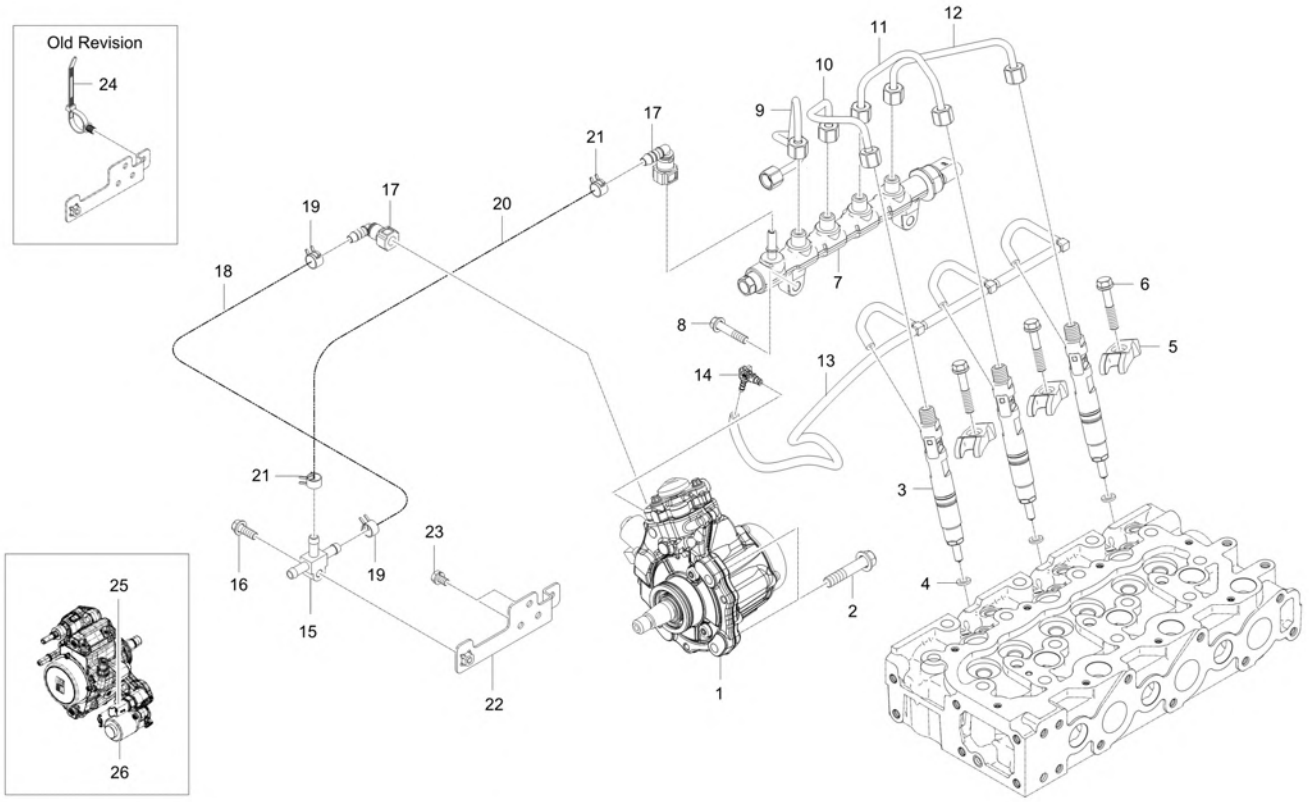

A : CK3510SEB

No.	Part Number	Description	Qty A	Qty B	Qty C	Qty D	Qty E	I.C	Remark
1	EH35-0001A	ASSY PUMP, HP FUEL	1						
2	01754-50835	BOLT v	3						M8XP1.25
3	EH15-0001A	ASSY INJECTOR	3						
3	EH15-0001B	ASSY INJECTOR	3 XJJ700041 ~					<--O-->	
4	EF36-0011A	SEAT,INJECTOR	3						t=2.5
5	F6805-53453	CLAMP, INJECTOR	3						
6	F6800-53471	BOLT, INJECTOR CLMAP	3						
7	EH35-0002A	ASSY RAIL, FUEL	1						
8	01754-50830	BOLT FLANGE	2						M8XP1.25
9	EH35-0005A	PIPE, RAIL	1						
10	F6800-53722	PIPE 2, INJECTION	1						
11	F6800-53732	PIPE 3, INJECTION	1						
12	F6800-53742	PIPE 4, INJECTION	1						
13	EH25-0001A	ASSY TUBE, INJECTOR RETURN	1						
14	F6800-42511	CONNECTOR	1						
15	EH35-0015A	JOINT, FUEL HOSE dnr v	1						
15	EH35-0015B	JOINT, FUEL HOSE v	1					<------	
16	01754-50625	BOLT, FLANGE	1						M6XP1.0

----> Old replace New
<---> Interchangeable
* Please place an order assy(*)
<---- New replace Old
<-O-> Interchangeable with another part(s)
<-X-> Not interchangeable

https://tractormanualz.com/

EH3-G151001

FUEL EQUIPMENT GROUP

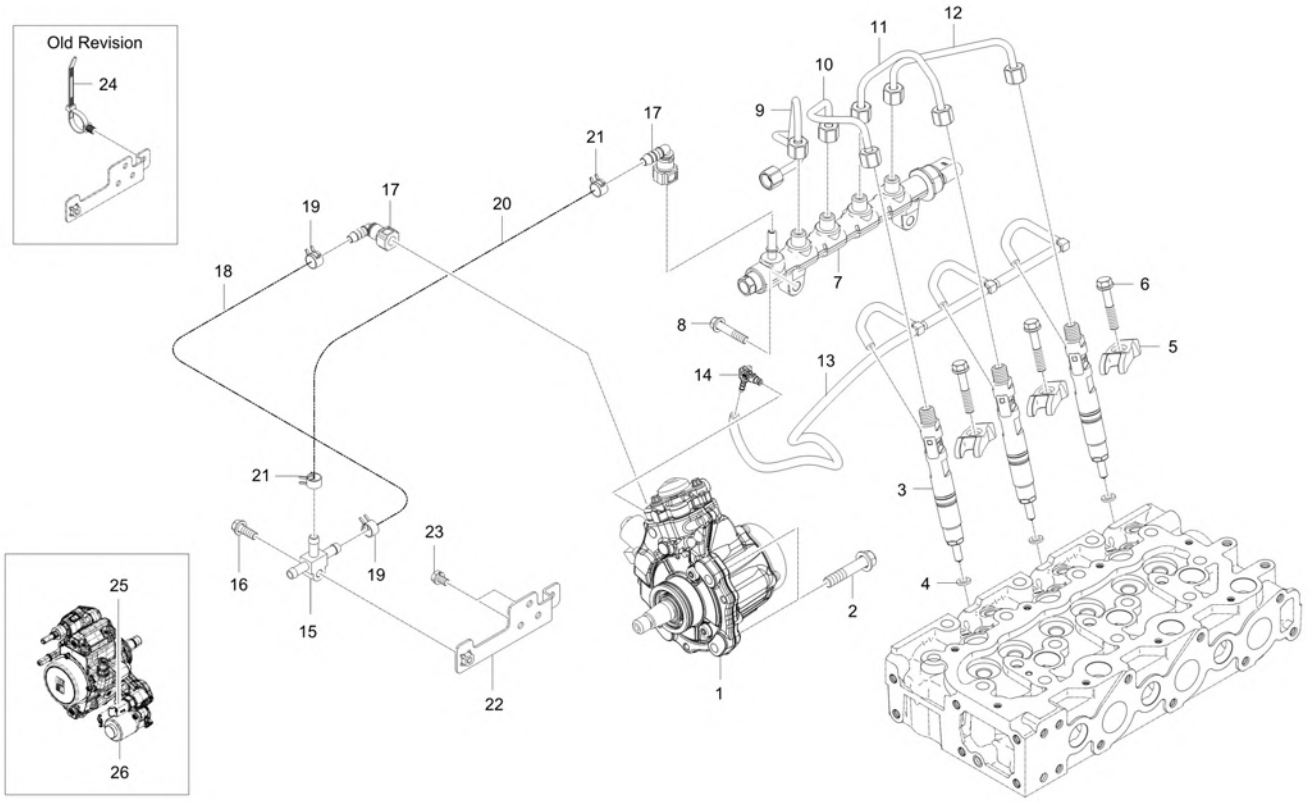

A : CK3510SEB

No.	Part Number	Description	Qty A	Qty B	Qty C	Qty D	Qty E	I.C	Remark
17	EH25-0006A	CONNECTOR, QUICK-128-783-002	2						
18	09661-80260	HOSE, FUEL	1						
19	09318-88130	CLAMP, HOSE	2						DIA13
20	09661-80150	HOSE, FUEL	1						
21	14911-4275-1	CLIP, TUBE	2						T0.8*#12
22	EH35-0018A	BRACKET FUEL HOSE	1						
23	01023-50610	BOLT, WASHER	2						M6XP1.0
24	T2198-82571	BAND CABLE	1						
25	F6800-12103002	FUEL TEMPERATURE SENSOR	1						-
26	EH15-0016A	IMV VALVE	1						

----> Old replace New
<---> Interchangeable
* Please place an order assy(*)
<---- New replace Old
<-O-> Interchangeable with another part(s)
<-X-> Not interchangeable

https://tractormanualz.com/

EH3-G162001

WATER FLANGE GROUP

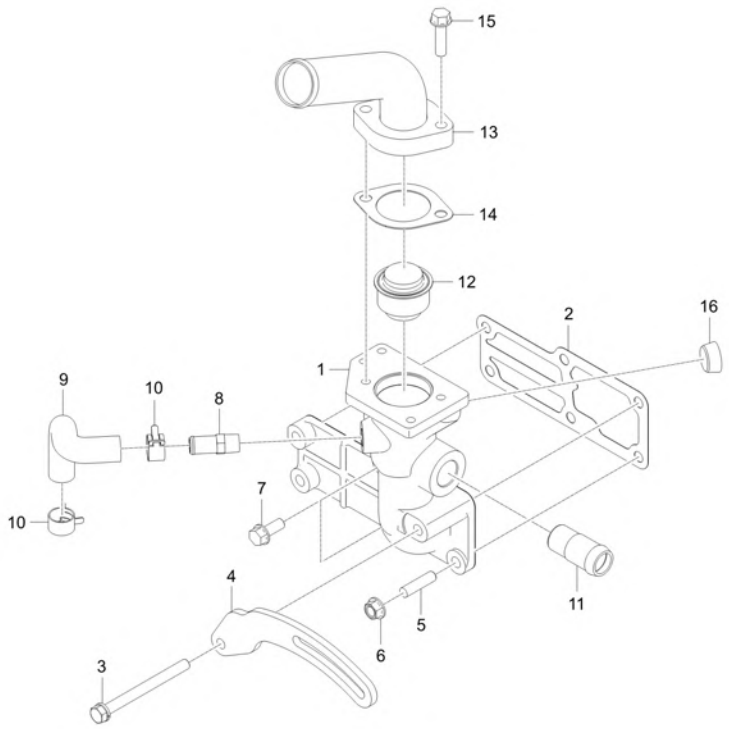

A : CK3510SEB

No.	Part Number	Description	Qty A	Qty B	Qty C	Qty D	Qty E	I.C	Remark
1	F5830-72914	PLANGE, WATER dnr v	1						N
2	F6800-72921	GASKET COOLING WATER FLANGE	1						
3	01123-50870	WASHER BOLT	1						
4	F6800-64421	SUPPORT, ALTERNATOR dnr v	1						
5	01513-50822	STUD	1						M8*1.25
6	02763-50080	FLANGE NUT	1						M8XP1.25
7	01754-50820	BOLT, FLANGE	2						M8XP1.25
8	E5500-73342	HOSE, WATER RETURN v	1						
8	E5500-73343	PIPE, WATER RETURN	1					<------	
9	E6850-73342	HOSE, WATER PUMP v	1						
10	09318-88180	CLAMP, HOSE	2						
11	F6800-13311	CONNECTOR, COOLANT	1						DIA22.3
12	E5500-73013	THERMOSTAT ASSEMBLY	1						
13	F5850-73262	COVER,THERMOSTAT	1						
14	E5500-73272	GASKET v	1						t1.0
15	01754-50825	BOLT, FLANGE	2						M8XP1.25
16	F6860-96042	PLUG	1						PT1/2

----> Old replace New
<---- New replace Old
<-X-> Not interchangeable
<---> Interchangeable
<-O-> Interchangeable with another part(s)
* Please place an order assy(*)

https://tractormanualz.com/

EH3-G163001

WATER PUMP GROUP

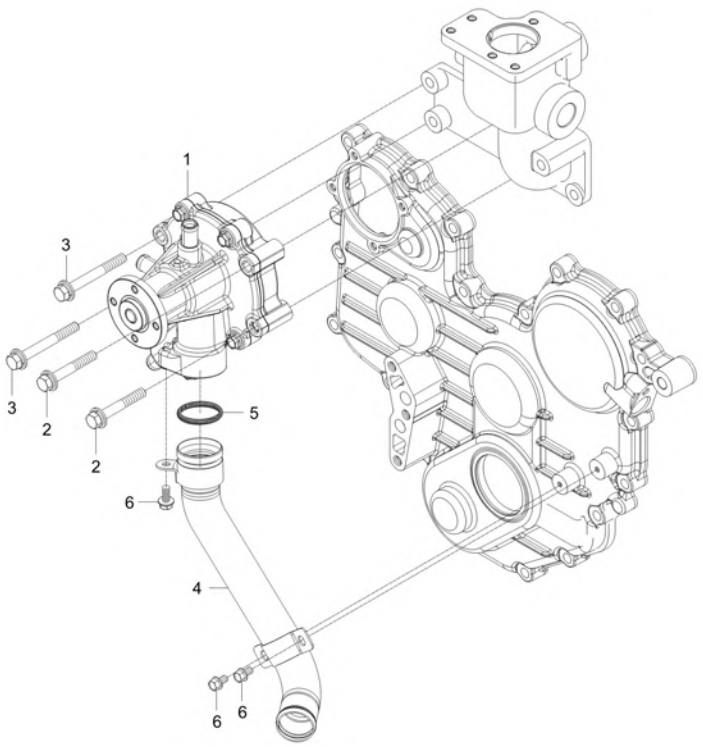

A : CK3510SEB

No.	Part Number	Description	Qty A	Qty B	Qty C	Qty D	Qty E	I.C	Remark
1	F6800-73031	ASSY PUMP,WATER sp v	1						
2	01125-50850	BOLT, WASHER	2						M8*P1.25
3	01125-50870	BOLT, WASHER	2						
4	F6800-73051	WATER PUMP PIPE ASSY	1						
5	04811-00320	O RING v	1						(P32)
6	01754-50610	BOLT, FLANGE	3						M6XP1.0

----> Old replace New
<----> Interchangeable
* Please place an order assy(*)
<---- New replace Old
<-O-> Interchangeable with another part(s)
<-X-> Not interchangeable

https://tractormanualz.com/

EH3-G171001

EGR GROUP

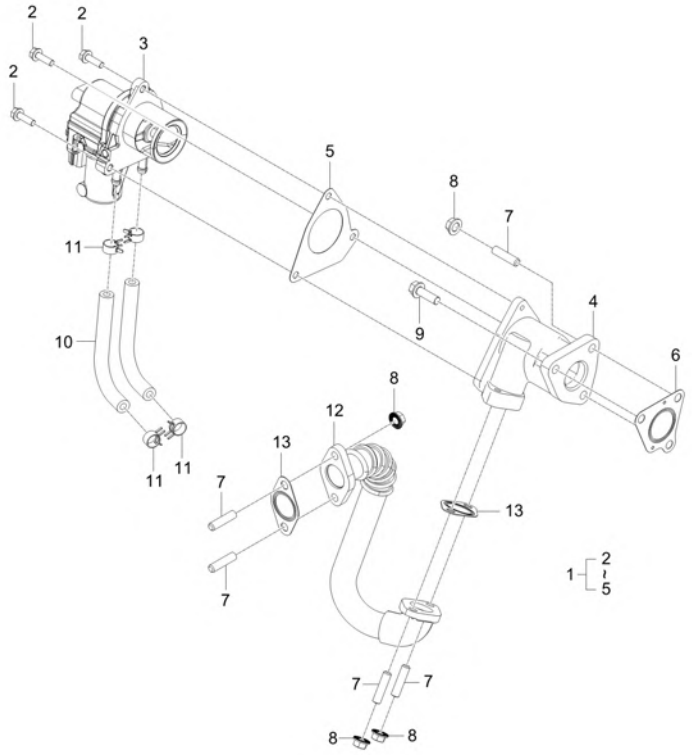

A : CK3510SEB

No.	Part Number	Description	Qty A	Qty B	Qty C	Qty D	Qty E	I.C	Remark
1	F5800-17503	EGR VALVE AND HOUSING ASSY	1						
2	01754-50620	BOLT, FLANGE	3						
3	F5800-17512	EGR VALVE ASSY	1						
4	F5800-17522	EGR HOUSING HOUSING	1						-
5	F5800-17531	GASKET	1						
6	F6800-17551	GASKET, EGR HOUSING	1						
7	01513-50822	STUD	5						M8*1.25
8	02763-50080	FLANGE NUT	5						M8XP1.25
9	01754-50825	BOLT, FLANGE	2						M8XP1.25
10	F5830-17562	COOLING HOSE	2						
11	09318-88130	CLAMP, HOSE	4						
12	F5830-17801	EGR PIPE ASSY	1						N
13	F6800-20301	GASKET, EGR	2						

----> Old replace New
<---- New replace Old
<-X-> Not interchangeable
<---> Interchangeable
<-O-> Interchangeable with another part(s)
* Please place an order assy(*)

https://tractormanualz.com/

EH3-G172001

EGR COOLER GROUP

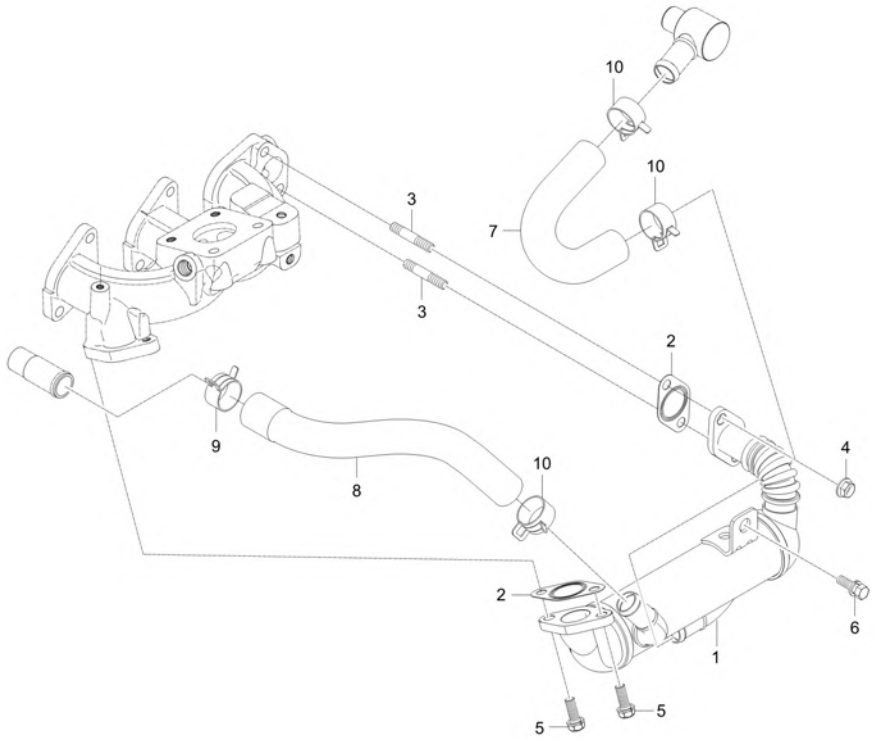

A : CK3510SEB

No.	Part Number	Description	Qty A	Qty B	Qty C	Qty D	Qty E	I.C	Remark
1	F5800-20101	EGR COOLER ASSY	1						
2	F6800-20301	GASKET, EGR	2						
3	01513-50835	STUD	2						
4	F6800-91911	U-NUT	2						-
5	01123-50822	WASHER BOLT	2						M8XP1.25
6	01123-50816	Hex Head Cap Screw	1						M8XP1.25
7	F6800-20401	HOSE 1, EGR COOLER	1						
8	F6800-20501	HOSE 2, EGR COOLER	1						
9	09318-88260	HOSE CLAMP	1						
10	09318-88250	CLAMP	3						

----> Old replace New <---- New replace Old <-X-> Not interchangeable
<---> Interchangeable <-O-> Interchangeable with another part(s)
* Please place an order assy(*)

https://tractormanualz.com/

EH3-G191001

GLOW PLUG GROUP

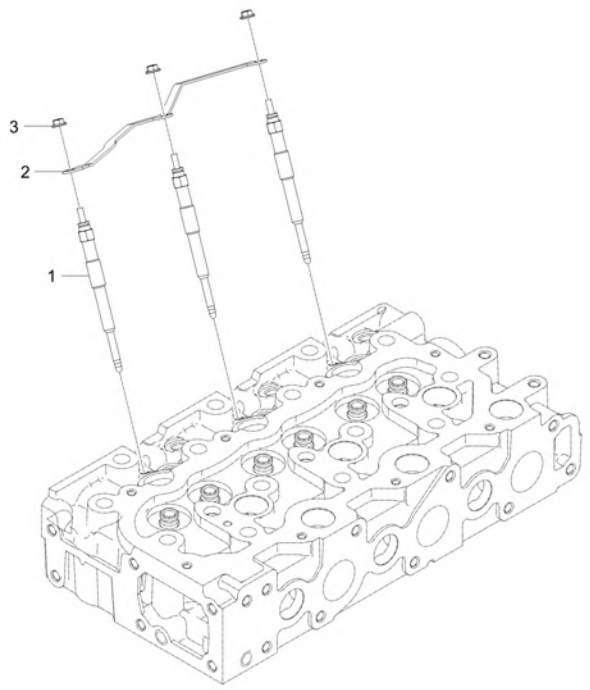

A : CK3510SEB

No.	Part Number	Description	Qty A	Qty B	Qty C	Qty D	Qty E	I.C	Remark
1	F6800-65511	PLUG,GLOW	3						N
2	EH29-0001A	GLOW PLUG CORD	1						
3	02761-50040	NUT, FLANGE	3						

----> Old replace New
<----> Interchangeable
* Please place an order assy(*)
<---- New replace Old
<-O-> Interchangeable with another part(s)
<-X-> Not interchangeable

https://tractormanualz.com/

TC2-G112003

COOLING FAN GROUP

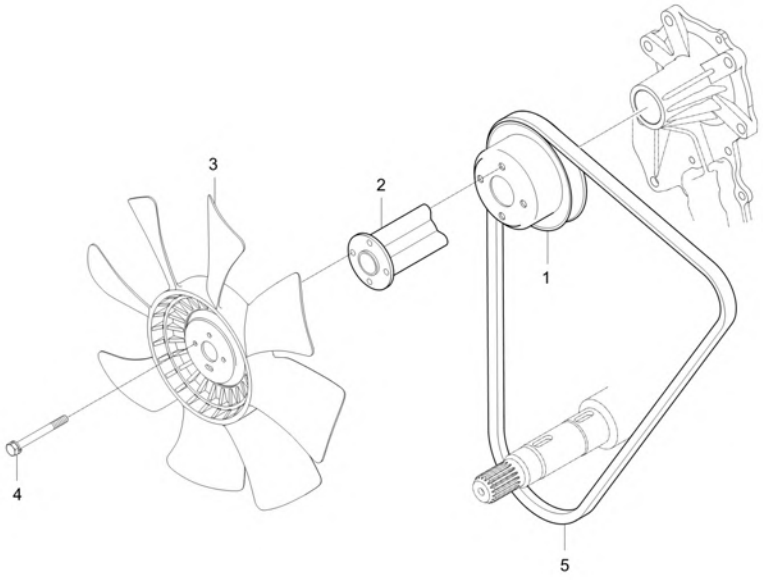

A : CK3510SEB

No.	Part Number	Description	Qty A	Qty B	Qty C	Qty D	Qty E	I.C	Remark
1	E5616-74252ED	PULLEY, FAN	1						
2	E6850-74151	COLLAR,FAN	1						
3	EF36-0024A	FAN, COOLING	1						
4	01023-50665	BOLT, WASHER	4						MEX10*76
5	E6857-72531	BELT,FAN	1						
5	EH16-0008A	BELT, FAN-GREEN-1 LA42.5	1					<------	REC GREEN -1 LA42.5

----> Old replace New
<---> Interchangeable
* Please place an order assy(*)
<---- New replace Old
<-O-> Interchangeable with another part(s)
<-X-> Not interchangeable

https://tractormanualz.com/

TC2-G115001

AFTERTREATMENT GROUP

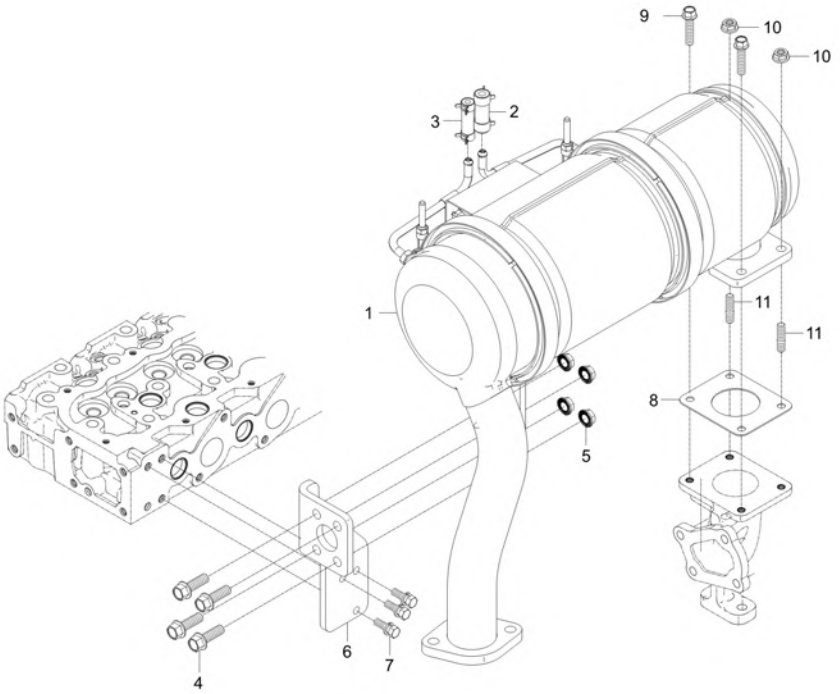

A : CK3510SEB

No.	Part Number	Description	Qty A	Qty B	Qty C	Qty D	Qty E	I.C	Remark
1	F5850-25101	CCRT ASSY	1						-
2	F6800-26661	TUBE, 1	1						
3	F6800-26671	TUBE, 2	1						
4	01133-51032	BOLT	4						M10*P1.25
5	02783-50100	FLANGE NUT	4						M10XP1.25
6	F5830-25423	BRACKET	1						T=8.0
7	01123-50822	WASHER BOLT	3						M8XP1.25
8	F6800-12371	GASKET, TURBOCHARGER FLANGE	1						
9	F6800-92411	FLANGEBOLT	2						M8x1.25 25mm
10	F6800-91911	U-NUT	2						-
11	F6800-92441	BOLT, STUD	2						

----> Old replace New
<---- New replace Old
<-X-> Not interchangeable
<---> Interchangeable
<-O-> Interchangeable with another part(s)
* Please place an order assy(*)

https://tractormanualz.com/

TC2-G117005

FUEL FILTER GROUP

(CK3510SEB : VJJ700017 ~)

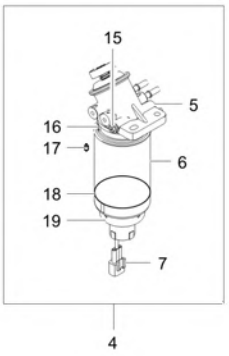

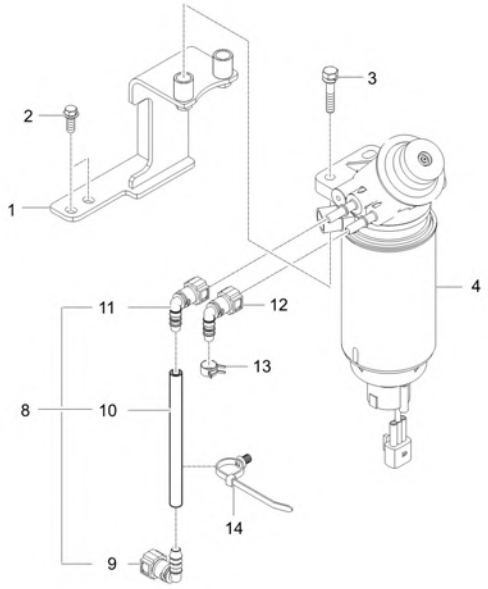

A : CK3510SEB

No.	Part Number	Description	Qty A	Qty B	Qty C	Qty D	Qty E	I.C	Remark
1	EH35-0016A	SUPPORT, FUEL FILTER	1						
1	EH35-0016B	SUPPORT, FUEL FILTER	1 VJJ700017 ~ WJJ700036					<------	
2	01123-50816	Hex Head Cap Screw	2						M8XP1.25
3	01754-50850	OB-BOLT FLANGE	2						
4	EH35-0006A	ASSY, MAIN FUEL FILTER	1						
5	EH35-0007A	ASSY HEAD	1						
6	EH35-0011A	FUEL FILTER	1						
7	F6800-16121	SENSOR, FUEL WATER	1						
8	EH25-0009A	ASSY HOSE, FUEL	1						
9	EH25-0007A	CONNECTOR, QUICK-226-308-000	1						
10	EH25-0010A	HOSE, FUEL	1						
11	EH25-0006A	CONNECTOR, QUICK-128-783-002	1						
12	EH25-0006A	CONNECTOR, QUICK-128-783-002	1						
13	09318-88140	CLMAP, HOSE	1						DIA14.8
14	T2198-82571	BAND CABLE	1						
15	EH35-0008A	PLUG-AIR	1						
16	EH35-0009A	ASSY HEATER	1						
17	EH35-0010A	NIPPLE	1						

----> Old replace New
<---> Interchangeable
* Please place an order assy(*)
<---- New replace Old
<-O-> Interchangeable with another part(s)
<-X-> Not interchangeable

https://tractormanualz.com/

TC2-G117005

FUEL FILTER GROUP

(CK3510SEB : VJJ700017 ~)

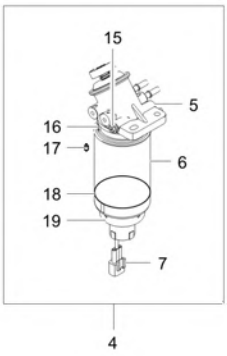

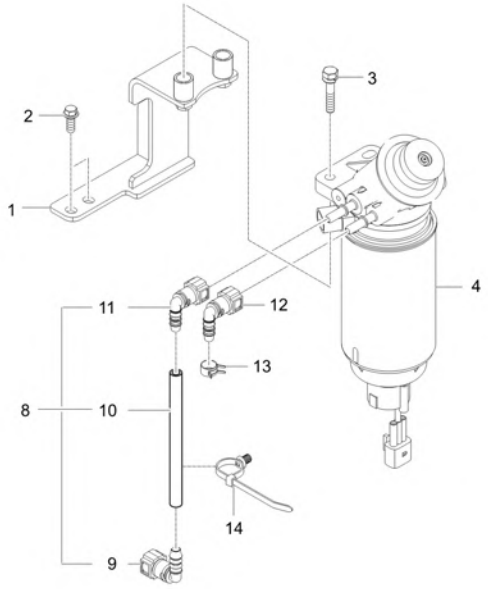

A : CK3510SEB

No.	Part Number	Description	Qty A	Qty B	Qty C	Qty D	Qty E	I.C	Remark
18	EH35-0012A	O RING	1						
19	EH35-0013A	BOWL, DRAIN	1						

----> Old replace New
<---- New replace Old
<-X-> Not interchangeable
<---> Interchangeable
<-O-> Interchangeable with another part(s)
* Please place an order assy(*)

https://tractormanualz.com/

TC2-G118002

MANUFACTURING LABEL GROUP

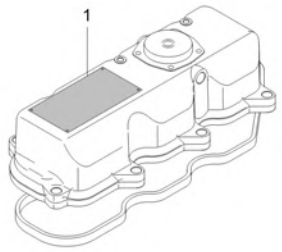

A : CK3510SEB

No.	Part Number	Description	Qty A	Qty B	Qty C	Qty D	Qty E	I.C	Remark
1	EH38-0002A	LABEL, EPA CERTIFICATE (35HP)	1 VJJ700017 ~ VJJ700088						
1	EH38-0002B	LABEL, EPA CERTIFICATE (35HP)	1 WJJ700001 ~ WJJ700036					<------	
1	EH38-0002C	LABEL, EPA CERTIFICATE (35HP)	1					<------	

----> Old replace New
<---> Interchangeable
* Please place an order assy(*)
<---- New replace Old
<-O-> Interchangeable with another part(s)
<-X-> Not interchangeable

https://tractormanualz.com/

TC2-G119001

ECU GROUP

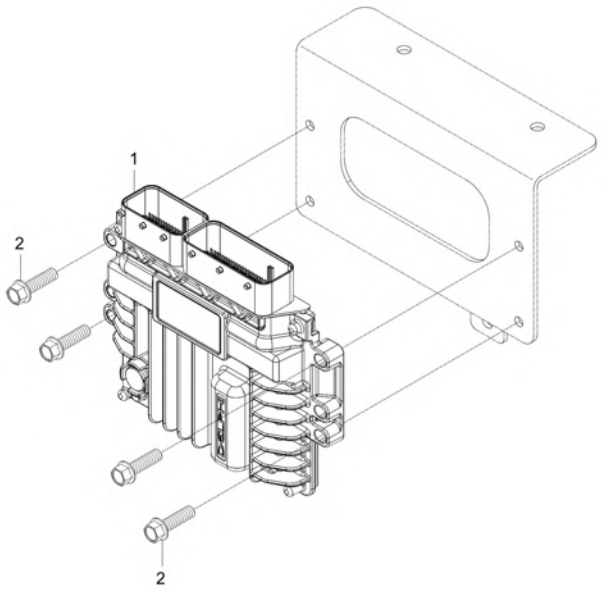

A : CK3510SEB

No.	Part Number	Description	Qty A	Qty B	Qty C	Qty D	Qty E	I.C	Remark
1	F6800-26102	333...ENG ECU T4 -Need Program v	1						
1	EH39-0001A	050 - CONTROLLER, ENGINE dnr v	1					<----->	
2	01754-50625	BOLT, FLANGE	6						7T

----> Old replace New
<---> Interchangeable
* Please place an order assy(*)
<---- New replace Old
<-O-> Interchangeable with another part(s)
<-X-> Not interchangeable

https://tractormanualz.com/

TC2-G271006

RANGE SHIFT SHAFT GROUP

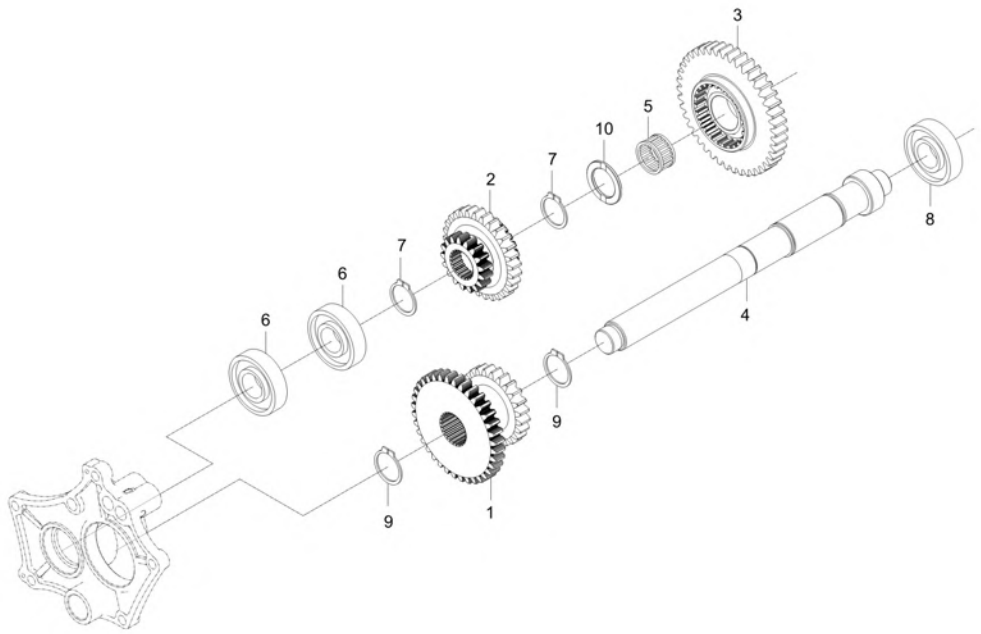

A : CK3510SEB

No.	Part Number	Description	Qty A	Qty B	Qty C	Qty D	Qty E	I.C	Remark
1	TC22-0137A	SHAFT, GEAR-24-35	1						
2	TC22-0138A	GEAR-29-18	1						
3	T5815-23531	GEAR,42	1						
4	T5815-23712	SHAFT, GEAR	1						
5	08823-03520	BEARING,NEEDLE	1						KT303520
6	08101-06305	BEARING,BALL v	2						DIA25
7	04612-00320	RING SNAP	2						
8	08101-06305	BEARING,BALL v	1						DIA25
9	04612-00300	SNAP RING	2						
10	T4810-22581	COLLAR, THRUST	1						

----> Old replace New
<---- New replace Old
<-X-> Not interchangeable
<---> Interchangeable
<-O-> Interchangeable with another part(s)
* Please place an order assy(*)

https://tractormanualz.com/

TC2-G331004

PROPELLER SHAFT GROUP

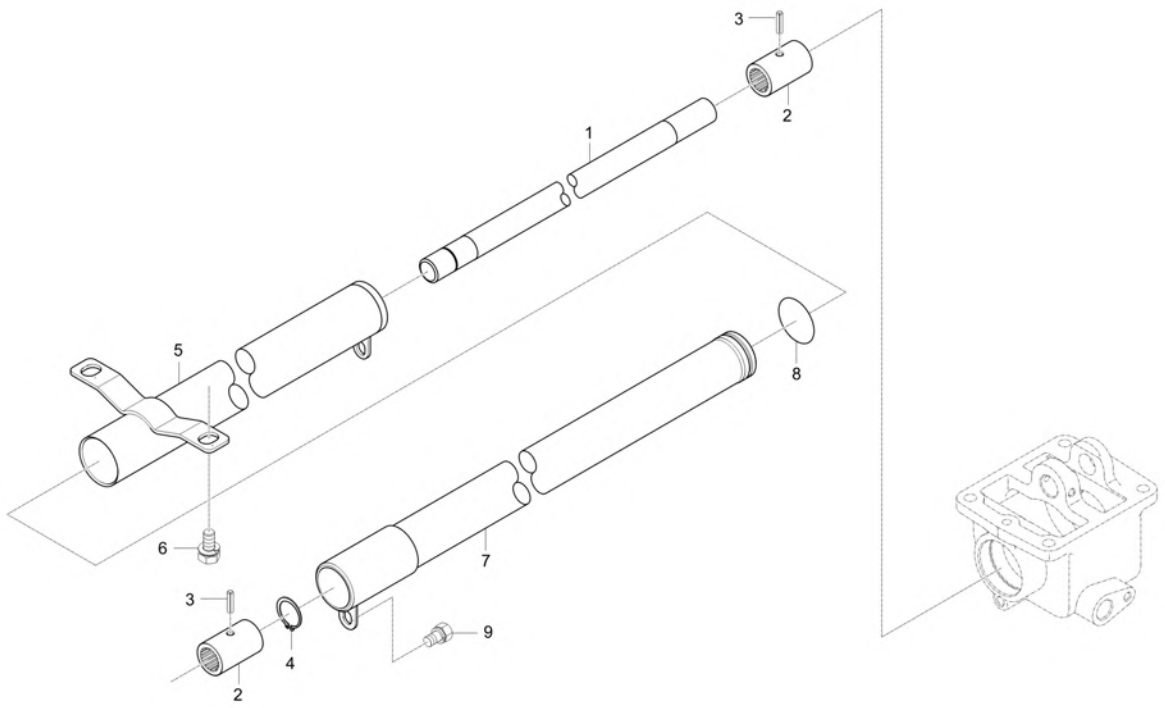

A : CK3510SEB

No.	Part Number	Description	Qty A	Qty B	Qty C	Qty D	Qty E	I.C	Remark
1	T5815-44581	SHAFT,PROPELLER dnr v	1						
1	T5815-44582	SHAFT, PROPELLER v	1 VJJ700073 ~ WJJ700036					<----->	
2	T4620-44592	COUPLING	2						
3	05411-00635	PIN, SPRING	1						DIA5*36
4	04612-00250	CIR-CLIP	1						
5	T5815-44591	COVER 1,PROPELLER	1						
5	T5815-44592	COVER 1,PROPELLER	1 UJJ700225 ~ WJJ700036					<----->	
6	01133-51220	BOLT, WASHER	2						M12*P1.25
7	TC22-0139A	COVER, PROPELLER SHAFT-2	1						
8	04811-06350	O RING	1						
9	01123-50816	Hex Head Cap Screw	1 UJJ700225 ~ UJJ700224						M8XP1.25
9	01123-50816	Hex Head Cap Screw	1					<----->	M8XP1.25

----> Old replace New
<---- New replace Old
<-X-> Not interchangeable
<---> Interchangeable
<-O-> Interchangeable with another part(s)
* Please place an order assy(*)

https://tractormanualz.com/

TC2-G272001

RANGE SHIFT FORK GROUP

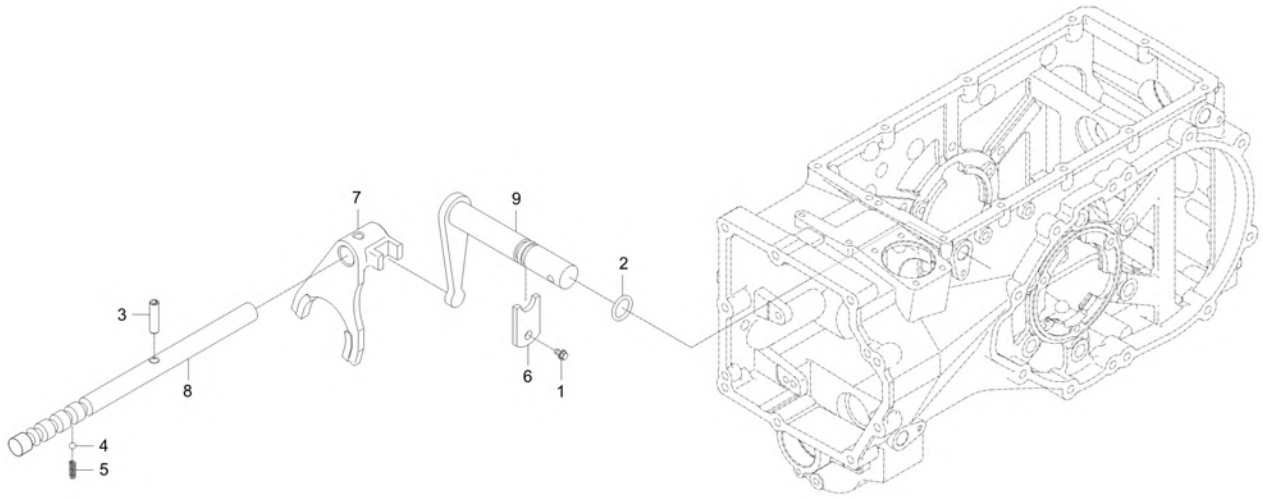

A : CK3510SEB

No.	Part Number	Description	Qty A	Qty B	Qty C	Qty D	Qty E	I.C	Remark
1	01754-50812	BOLT, FLANGE	1						M8XP1.25
2	04811-00140	O RING	1						
3	05411-00625	PIN, SPRING v	1						DIA6.4XL25
4	07715-01605	BALL,STEEL	1						5/16"
5	62331-1853-2	SPRING	1						DIA1.4
6	T2555-23331	STOPPER	1						
7	T5815-23114	FORK, SHIFT (RANGE)	1						
7	T5815-23115	FORK, SHIFT(RANGE)	1					<----->	
8	T5815-23123	ROD, FORK RANGE	1						
9	T5815-23262	ARM,SHIFT RANGE	1						

----> Old replace New
<---- New replace Old
<-X-> Not interchangeable
<---> Interchangeable
<-O-> Interchangeable with another part(s)
* Please place an order assy(*)

https://tractormanualz.com/

TC2-G282001

REAR DIFFERENTIAL GROUP

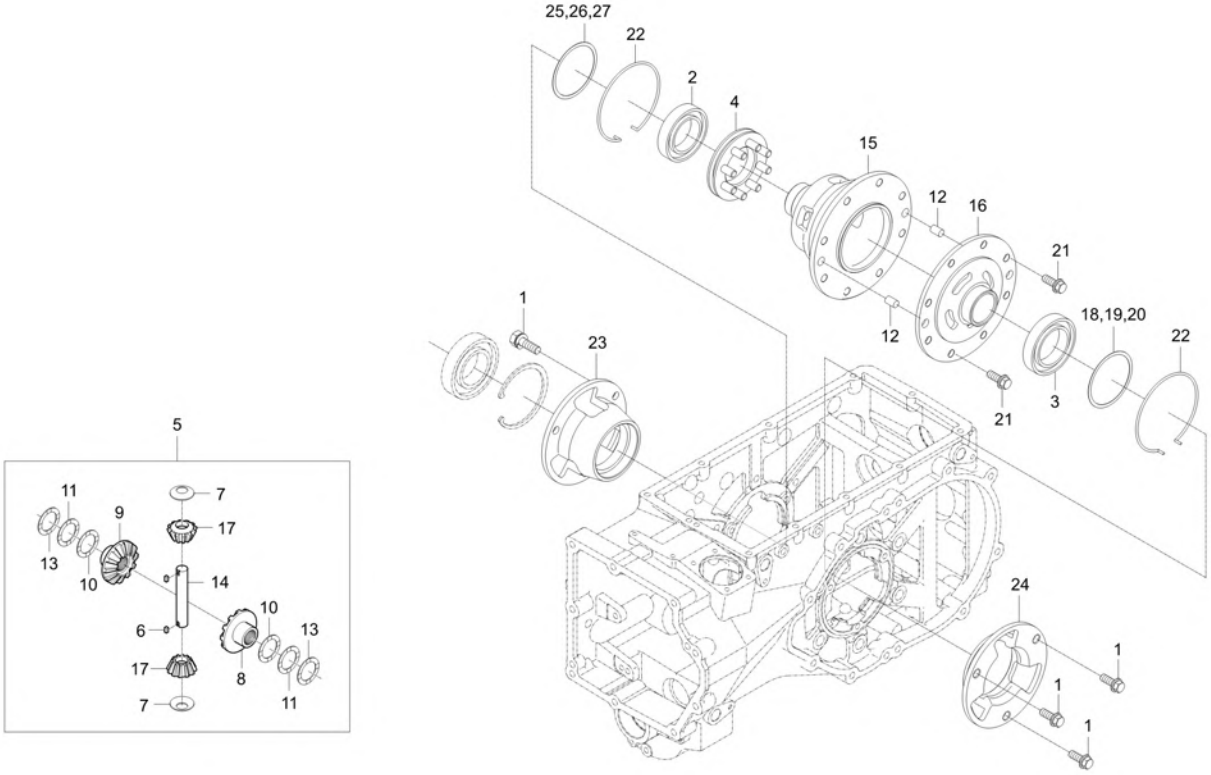

A : CK3510SEB

No.	Part Number	Description	Qty A	Qty B	Qty C	Qty D	Qty E	I.C	Remark
1	01133-51025	BOLT	6						M10XP1.25
2	08101-06009	BEARING,BALL	1						#6009
3	08101-06010	BEARING,BALL	1						#6010
4	37300-2661-4	DIFF LOCK SHIFTER	1						
5	T2195-26102	ASSY DIFFERENTIAL	1						
5	T2195-26103		1					<--O-->	
6	31220-2628-1	KEY	2						
7	31220-2639-2	WASHER, DIFF PINION	2						
8	37300-2643-2	GEAR, DIFF RH	1						
9	37300-2644-2	DIFF GEAR LH	1						
10	37300-2648-1	WASHER 1, DIFF	2						
11	37300-2649-1	WASHER 2, DIFF	2						
12	37300-2817-2	PIN, PARALLEL	2						
13	38240-2647-2	WASHER, DIFF.3	2						
14	T2185-26342	SHAFT 1, DIFFERENTIAL PINION	1						
15	T2195-26511	CASE,DIFFRENTIAL dnr v	1						
15	T2185-26511	CASE,DIFFRENTIAL	1					<--O-->	
16	T2195-26521	CAP, DIFFERENTIAL CASE v	1						

----> Old replace New
<---- New replace Old
<-X-> Not interchangeable
<---> Interchangeable
<-O-> Interchangeable with another part(s)
* Please place an order assy(*)

https://tractormanualz.com/

TC2-G282001

REAR DIFFERENTIAL GROUP

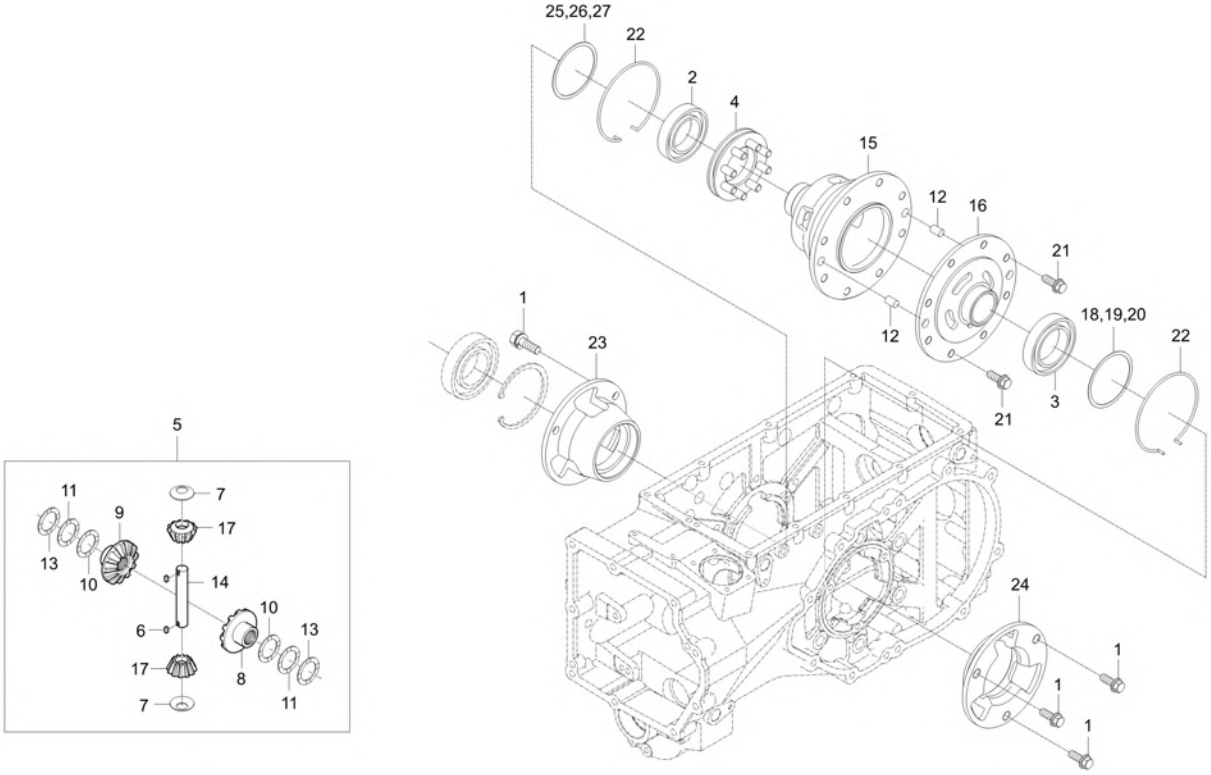

A : CK3510SEB

No.	Part Number	Description	Qty A	Qty B	Qty C	Qty D	Qty E	I.C	Remark
16	T2185-26521	CAP, DIFFERENTIAL CASE v	1					<--O-->	
17	T2240-26355	PINION, DIFF	2						
18	T2305-26061	SHIM, 0.1 dnr v	1						T0.1
19	T2305-26071	SHIM, 0.2 dnr v	1						T0.2
20	T2305-26081	SHIM, 0.4	1						T0.4
21	T4115-43871	BOLT dnr v	8						
21	37800-4387-1	BOLT	8					<--O-->	M10xP1.25
22	T5715-26591	HOLDING, SPRING	2						
23	T5815-26551	ROTOR SUPPORT	1						
24	T5815-26561	CASE,DIFFRENTIAL BRG	1						
25	U3215-14601	SHIM, 0.1	1						
26	U3215-14611	SHIM 0.2	1						
27	U3215-14621	SHIM, 0.4	1						
28	01133-51025	BOLT	8						M10XP1.25

----> Old replace New
<---- New replace Old
<-X-> Not interchangeable
<---> Interchangeable
<-O-> Interchangeable with another part(s)
* Please place an order assy(*)

https://tractormanualz.com/

TC2-G283003

REAR DIFF LOCK GROUP

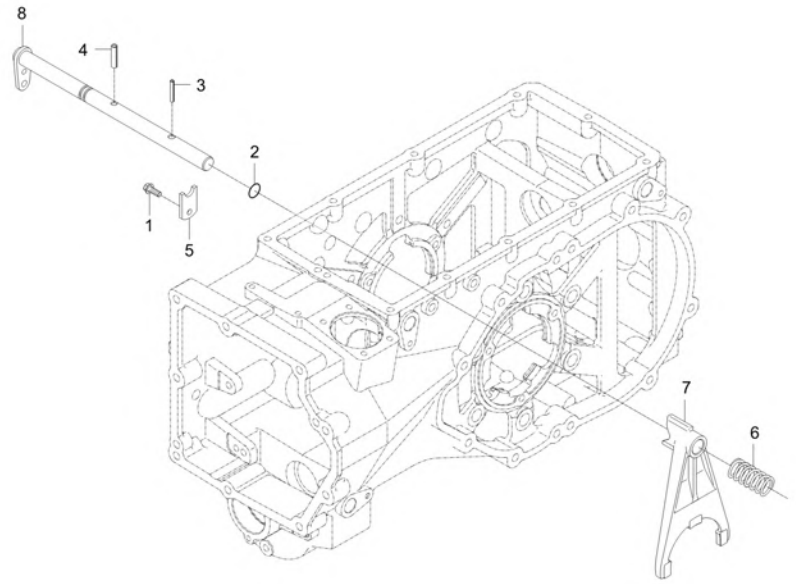

A : CK3510SEB

No.	Part Number	Description	Qty A	Qty B	Qty C	Qty D	Qty E	I.C	Remark
1	01754-50812	BOLT, FLANGE	1						M8XP1.25
2	04811-00140	O RING	1						
2	04811-00140	O RING	2					<------	
3	05411-00540	PIN,SPRING	1						
4	05411-00840	PIN, SPRING	1						DIA8*40
5	T2555-23331	STOPPER	1						
6	T2555-26641	FRICTION SPRING	1						
7	T5715-26631	FORK,SHAFT	1						
8	T5815-26682	CAM,DIFFRENTIAL LOCK	1						

----> Old replace New
<---- New replace Old
<-X-> Not interchangeable
<---> Interchangeable
<-O-> Interchangeable with another part(s)
* Please place an order assy(*)

https://tractormanualz.com/

TC2-G2B1003

FRONT WHEEL DRIVE SHAFT GROUP

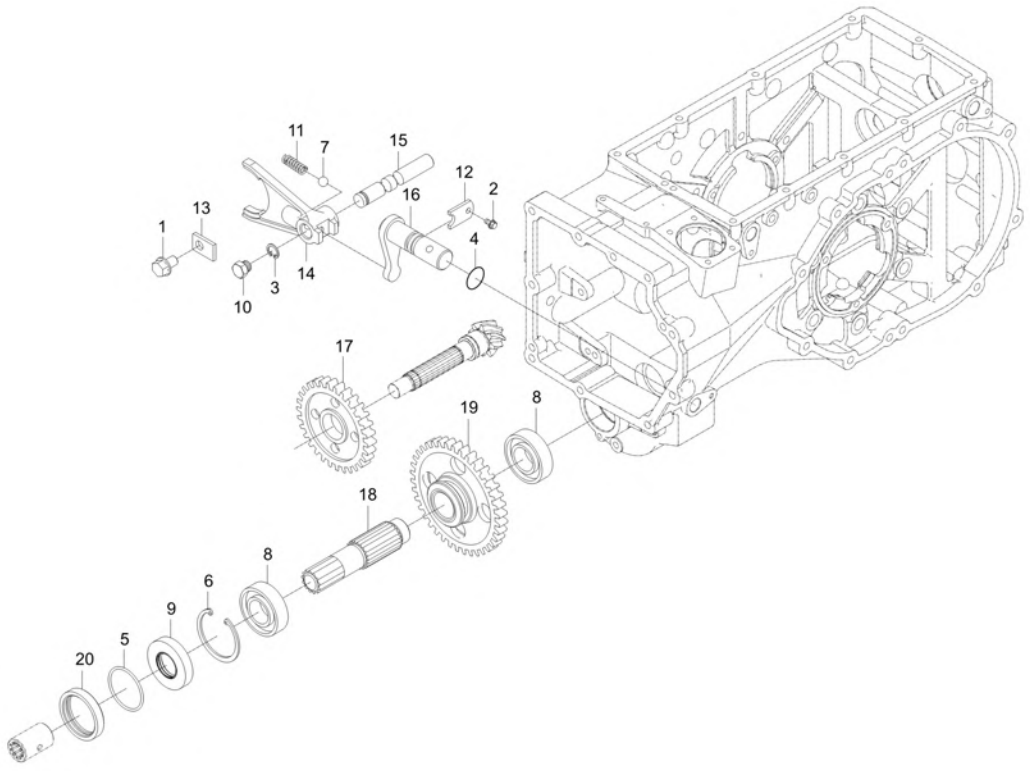

A : CK3510SEB

No.	Part Number	Description	Qty A	Qty B	Qty C	Qty D	Qty E	I.C	Remark
1	01754-50812	BOLT, FLANGE	1						M8XP1.25
2	01754-50812	BOLT, FLANGE	1						M8XP1.25
3	04611-00120	SNAP RING	1						
4	04811-00140	O RING	1						
5	04811-06420	O RING	1						
6	04611-00520	SNAP RING	1						
7	07715-01605	BALL,STEEL	1						5/16"
8	08101-06205	BEARING BALL dnr v	2						DIA25
9	09502-55210	SEAL OIL v	1						DIA25
10	37220-2125-1	USE 37220-21251	1						
11	62331-1853-2	SPRING	1						DIA1.4
12	T2350-23132	STOPPER	1						T3.2
13	T2555-23331	STOPPER	1						
14	T5815-44112	FORK, SHIFT(4WD)	1						
15	T5815-44211	ROD, FORK	1						
16	T5815-44312	ARM,FRONT DRIVE	1						
17	T5815-44531	GEAR 30	1						
18	T5815-44562	SHAFT, FRONT WHEEL DRIVE	1						

----> Old replace New <---- New replace Old <-X-> Not interchangeable
<---> Interchangeable <-O-> Interchangeable with another part(s)
* Please place an order assy(*)

https://tractormanualz.com/

TC2-G2B1003

FRONT WHEEL DRIVE SHAFT GROUP

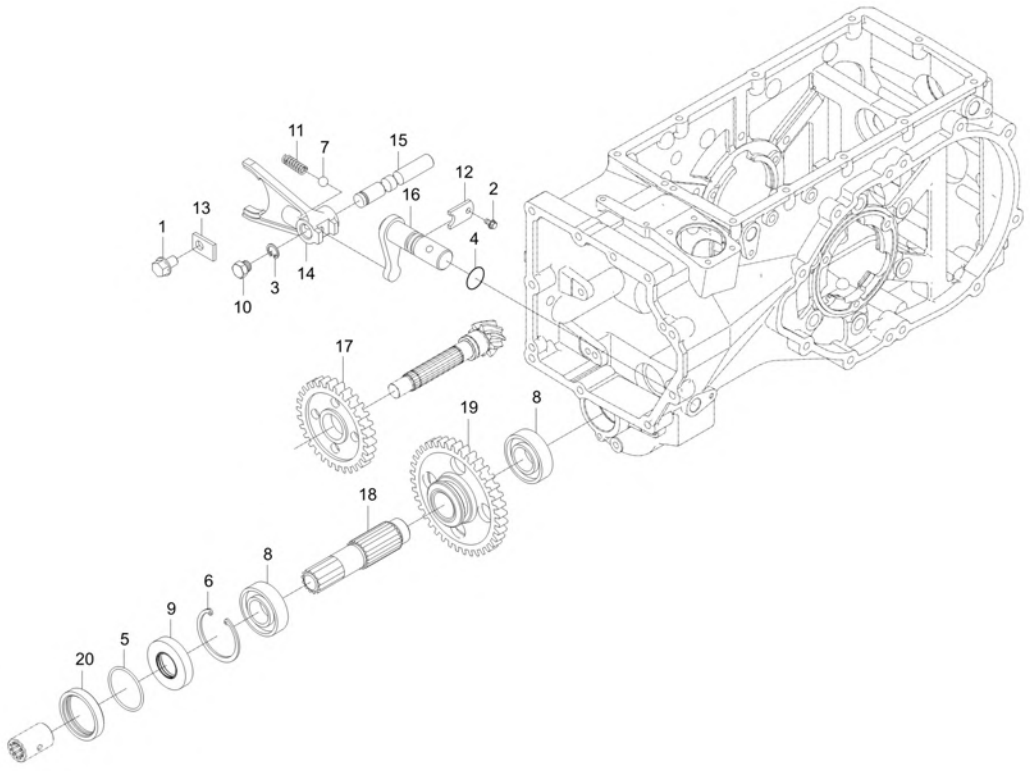

A : CK3510SEB

No.	Part Number	Description	Qty A	Qty B	Qty C	Qty D	Qty E	I.C	Remark
19	T5815-44611	GEAR 38	1						
20	T5815-44691	SLEEVE	1						

----> Old replace New
<----> Interchangeable
* Please place an order assy(*)
<---- New replace Old
<-O-> Interchangeable with another part(s)
<-X-> Not interchangeable

https://tractormanualz.com/

TC2-G293003

BRAKE GROUP

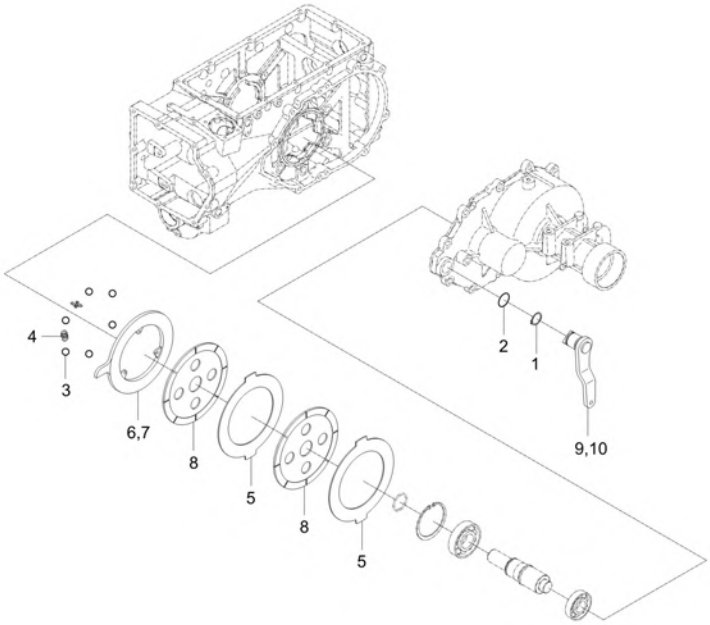

A : CK3510SEB

No.	Part Number	Description	Qty A	Qty B	Qty C	Qty D	Qty E	I.C	Remark
1	04612-00300	SNAP RING	2						
2	04811-00240	O RING	2						P24
3	07715-00805	BALL,STEEL obs v	12						5/8"
4	T2555-28461	FRICTION SPRING	6						
5	T5715-28222	PLATE, BRAKE	4						
6	T5715-28243	PLATE,CAM LH	1						
7	T5715-28253	PLATE,CAM RH	1						
8	T5755-28211	BREAK DISC	4						
9	TC22-0026A	LEVER, BRAKE CAM-LH	1						225DW380
10	TC22-0027A	LEVER, BRAKE CAM-RH	1						225DW380

----> Old replace New <---- New replace Old <-X-> Not interchangeable
<---> Interchangeable <-O-> Interchangeable with another part(s)
* Please place an order assy(*)

https://tractormanualz.com/

TC2-G2A1001

REAR AXLE GROUP

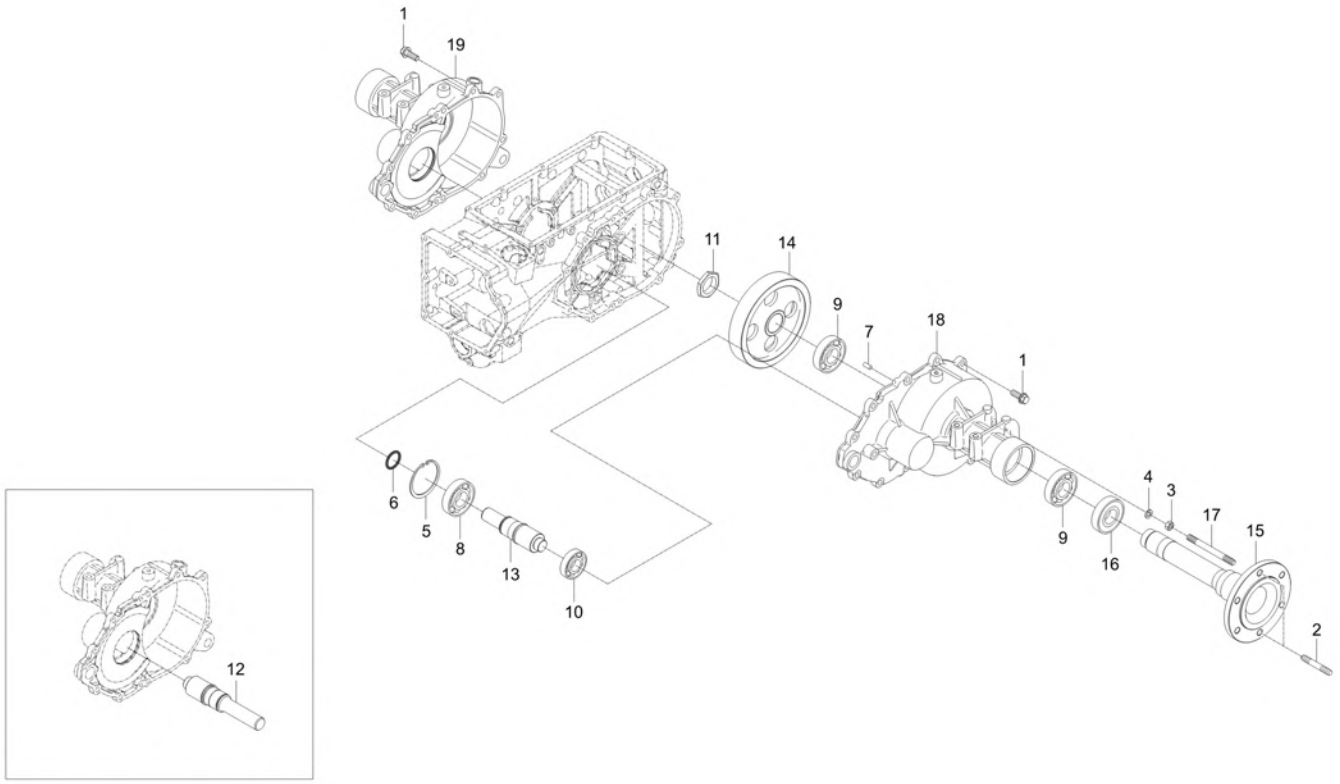

A : CK3510SEB

No.	Part Number	Description	Qty A	Qty B	Qty C	Qty D	Qty E	I.C	Remark
1	01177-51235	BOLT v	16						M12XP1.25 (9T/스프
2	01517-51632	STUD v	4						M16*1.5*32
3	02176-50120	NUT	4						M12XP1.25
4	04512-50120	SPRING WASHER	4						M12
5	04611-00850	RING,SNAP	2						
6	04811-00390	O RING	2						
7	05012-01018	PIN, STRAIGHT	4						
8	08101-06209	BEARING, BALL v	2						#6209
9	08101-06210	BEARING, BALL	4						#6210
10	08101-06306	BEARING, BALL	2						#6306
11	T2185-27202	NUT, REAR AXLE v	2						
12	T5815-26711	SHAFT, GEAR 9 in length v	1						
13	T5815-26721	SHAFT, GEAR 7 in length v	1						
14	T5815-26831	GEAR, 56	2						
14	T5815-26832	GEAR, 56	2					<----->	
15	T5815-27112	WHEEL SHAFT	2						
15	T5815-27113	WHEEL SHAFT	2 TJJ700001 ~ WJJ700036					<----->	
16	T5815-27131	OIL SEAL	2						

----> Old replace New
<----> Interchangeable
* Please place an order assy(*)
<---- New replace Old
<-O-> Interchangeable with another part(s)
<-X-> Not interchangeable

https://tractormanualz.com/

TC2-G2A1001

REAR AXLE GROUP

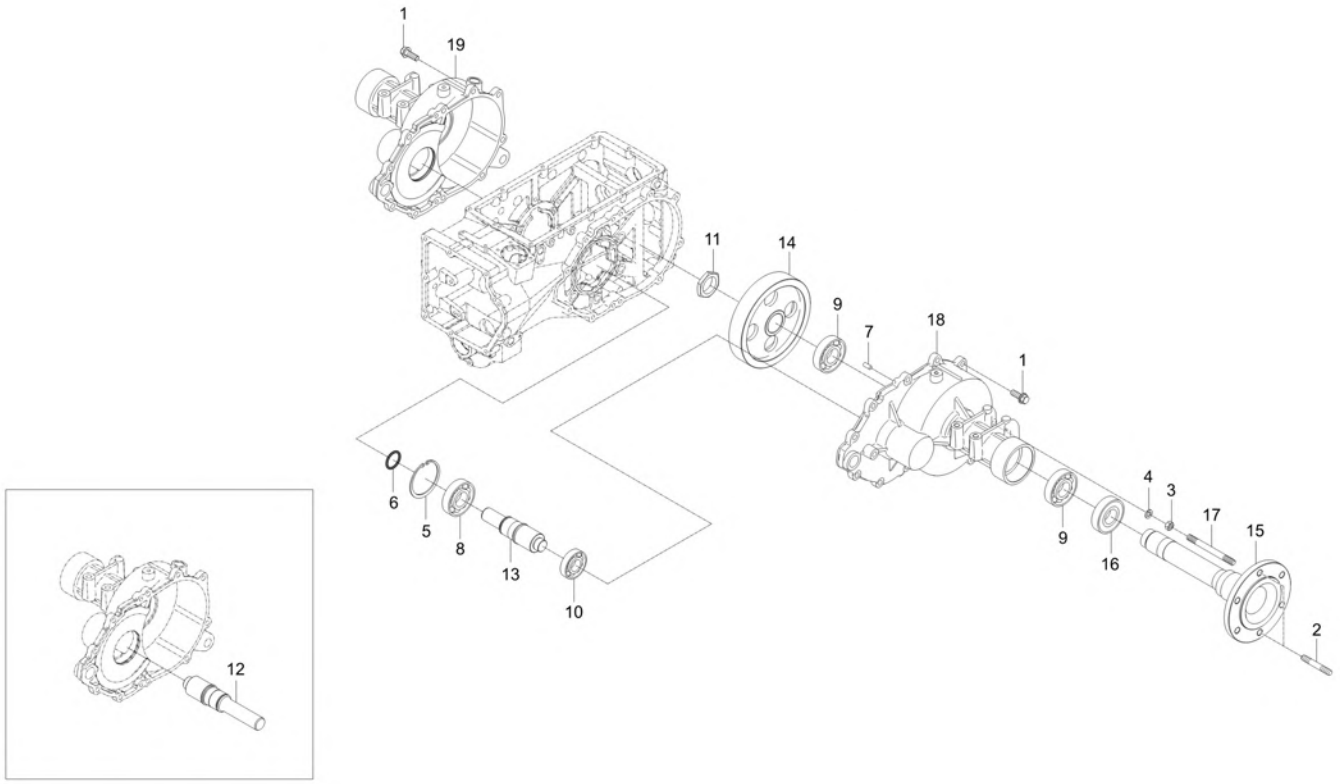

A : CK3510SEB

No.	Part Number	Description	Qty A	Qty B	Qty C	Qty D	Qty E	I.C	Remark
17	T5815-27361	BOLT, STUD	4						M12*1.25
18	T5815-28132	CASE, REAR AXLE LH dnr v	1						
18	T5815-28133	CASE,REAR AXLE LH dnr v	1					<------	
18	T5815-28134	CASE,REAR AXLE LH v	1					<----->	
19	T5815-28142	CASE, REAR AXLE RH dnr v	1						
19	T5815-28143	CASE,REAR AXLE RH v	1					<------	
19	T5815-28144	CASE,REAR AXLE RH v	1					<----->	

----> Old replace New
<---- New replace Old
<-X-> Not interchangeable
<---> Interchangeable
<-O-> Interchangeable with another part(s)
* Please place an order assy(*)

https://tractormanualz.com/

TC2-G2B2001

FRONT WHEEL DRIVE FORK GROUP

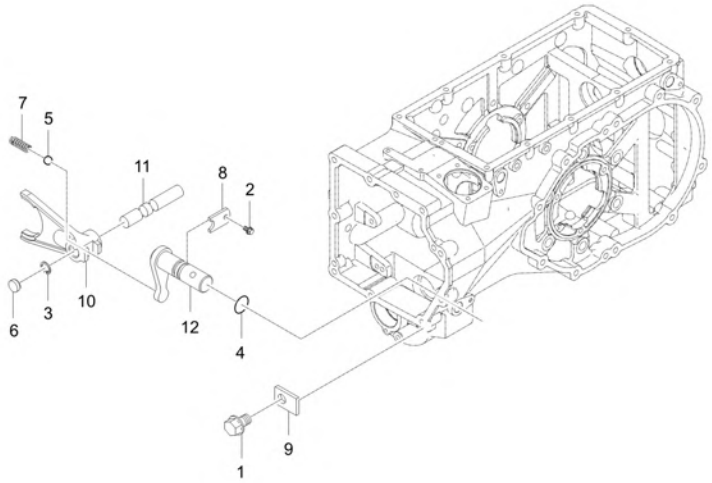

A : CK3510SEB

No.	Part Number	Description	Qty A	Qty B	Qty C	Qty D	Qty E	I.C	Remark
1	01754-50812	BOLT, FLANGE	1						M8XP1.25
2	01754-50812	BOLT, FLANGE	1						M8XP1.25
3	04611-00120	SNAP RING	1						
4	04811-00140	O RING	1						
5	07715-01605	BALL,STEEL	1						5/16"
6	37220-2125-1	USE 37220-21251	1						
7	62331-1853-2	SPRING	1						DIA1.4
8	T2350-23132	STOPPER	1						T3.2
9	T2555-23331	STOPPER	1						
10	T5815-44112	FORK, SHIFT(4WD)	1						
11	T5815-44211	ROD, FORK	1						
12	T5815-44312	ARM,FRONT DRIVE	1						

----> Old replace New
<---- New replace Old
<-X-> Not interchangeable
<---> Interchangeable
<-O-> Interchangeable with another part(s)
* Please place an order assy(*)

https://tractormanualz.com/

TC2-G2C4007

PTO SHAFT GROUP

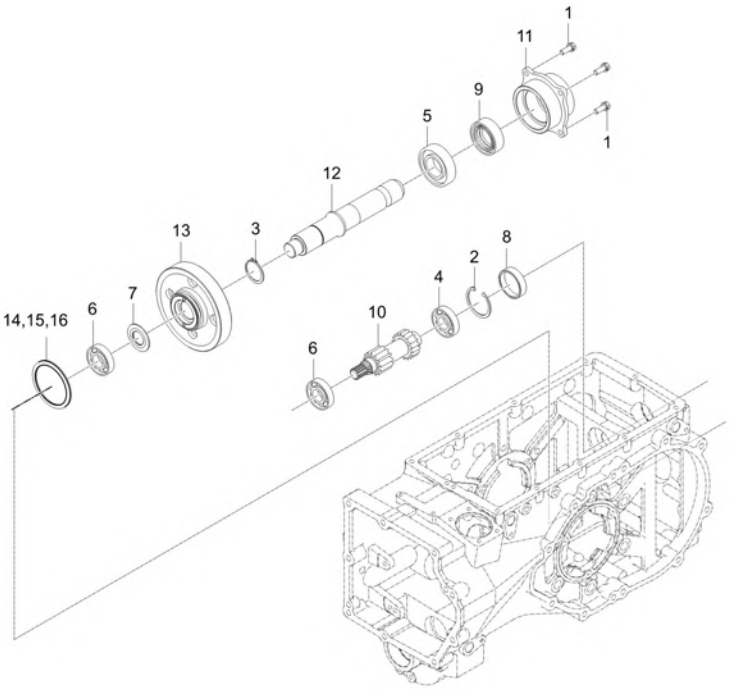

A : CK3510SEB

No.	Part Number	Description	Qty A	Qty B	Qty C	Qty D	Qty E	I.C	Remark
1	01123-50822	WASHER BOLT	4						M8XP1.25
2	04611-00520	SNAP RING	1						
3	04612-00350	CIR CLIP, EXTERNAL	1						
4	08101-06205	BEARING BALL dnr v	1						DIA25
5	08101-06207	BEARING BALL	1						#6207
6	08101-06305	BEARING,BALL v	2						DIA25
7	T2305-21762	COLLAR, THRUST v	1						
8	T2350-25421	SEAL CAP 52	1						
9	T2555-29111	OIL SEAL	1						
10	T5815-25231	SHAFT, GEAR 13	1						
11	T5815-25412	CASE, BEARING (PTO)	1						
12	TC22-0057B	SHAFT, PTO	1						
13	TC22-0058B	GEAR 58	1						
14	K5400-14592	SHIM v	1						T0.5
15	K5400-14582	SHIM	1						T0.2
16	K5400-14572	SHIM obs v	1						T0.1

----> Old replace New
<---> Interchangeable
* Please place an order assy(*)
<---- New replace Old
<-O-> Interchangeable with another part(s)
<-X-> Not interchangeable

https://tractormanualz.com/

TC2-G2C5003

PTO SHIFT FORK GROUP

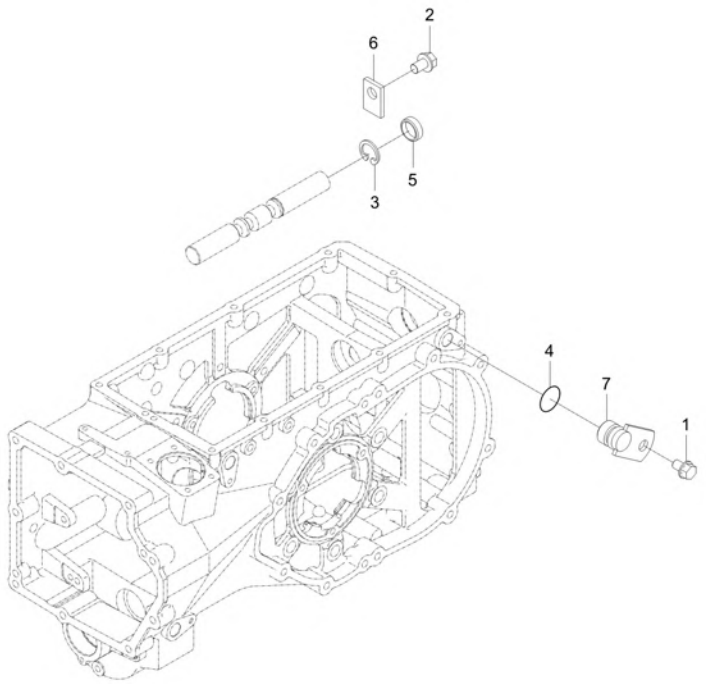

A : CK3510SEB

No.	Part Number	Description	Qty A	Qty B	Qty C	Qty D	Qty E	I.C	Remark
1	01754-50812	BOLT, FLANGE	1						M8XP1.25
2	01754-50812	BOLT, FLANGE	1						M8XP1.25
3	04611-00120	SNAP RING	1						
4	04811-00140	O RING	1						
5	37220-2125-1	USE 37220-21251	1						
6	T2350-23132	STOPPER	1						T3.2
7	TC22-0060A	PLUG	1						

----> Old replace New
<---- New replace Old
<-X-> Not interchangeable
<---> Interchangeable
<-O-> Interchangeable with another part(s)
* Please place an order assy(*)

https://tractormanualz.com/

TC2-G2G1003

REAR WHEEL GROUP

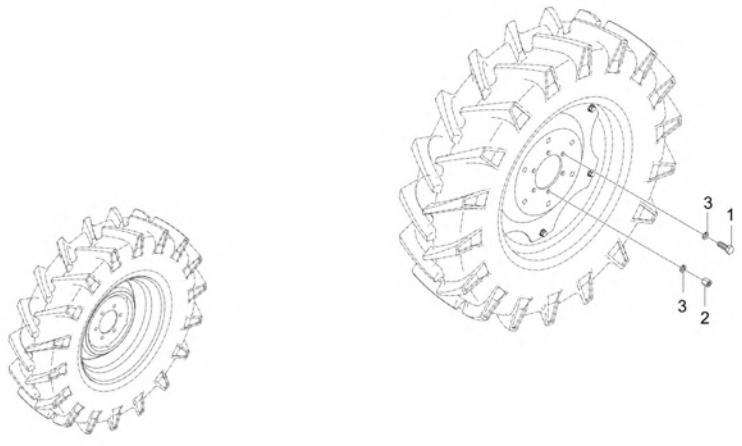

A : CK3510SEB

No.	Part Number	Description	Qty A	Qty B	Qty C	Qty D	Qty E	I.C	Remark
1	01073-51630	BOLT v	8						M16XP1.5
2	02076-50160	NUT	4						
3	04512-50160	WASHER, SPRING	12						M16

----> Old replace New
<---- New replace Old
<-X-> Not interchangeable
<---> Interchangeable
<-O-> Interchangeable with another part(s)
* Please place an order assy(*)

https://tractormanualz.com/

TC2-G2C1003

PTO INPUT SHAFT GROUP

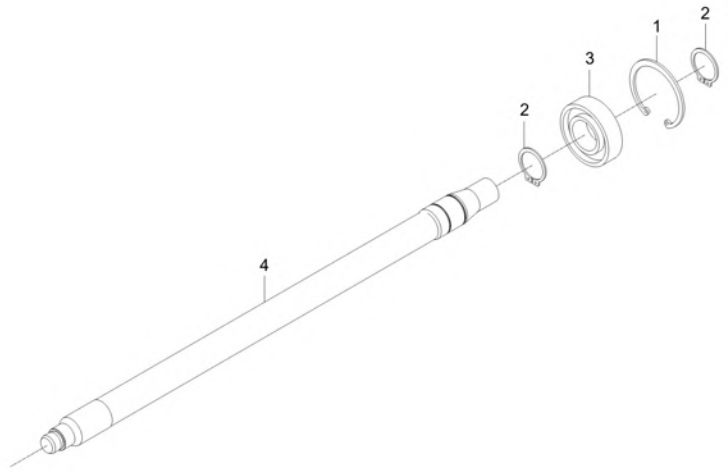

A : CK3510SEB

No.	Part Number	Description	Qty A	Qty B	Qty C	Qty D	Qty E	I.C	Remark
1	04611-00520	SNAP RING	1						
2	04612-00250	CIR-CLIP	2						
3	08101-06205	BEARING BALL dnr v	1						DIA25
4	TC22-0082B	SHAFT, INPUT PTO	1						

----> Old replace New
<---> Interchangeable
* Please place an order assy(*)
<---- New replace Old
<-O-> Interchangeable with another part(s)
<-X-> Not interchangeable

https://tractormanualz.com/

TC2-G2C3003

PTO CLUTCH GROUP

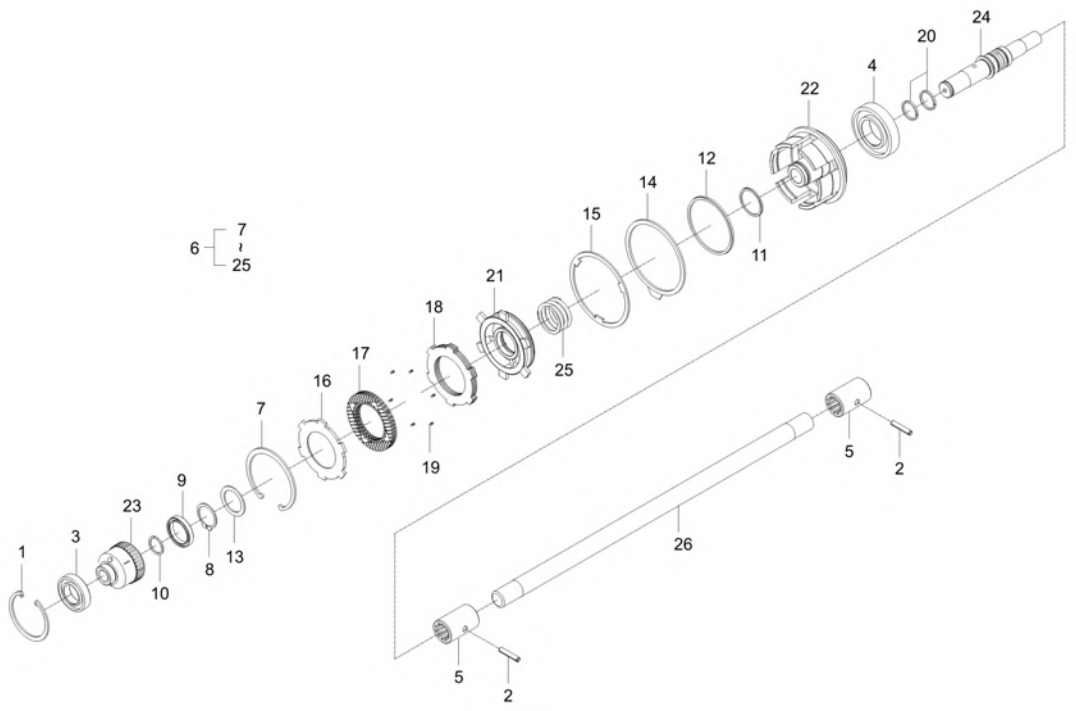

A : CK3510SEB

No.	Part Number	Description	Qty A	Qty B	Qty C	Qty D	Qty E	I.C	Remark
1	04611-00550	RING,SNAP	1						DIA55
2	05411-00528	PIN,SPRING	2						
3	08101-06006	BEARING, BALL	1						#6006
4	08101-06208	BEARING BALL v	1						#6208
5	T2195-25241	COUPLING	2						
6	TC22-0051B	ASSY CLUTCH, PTO	1						
7	04611-00920	RING SNAP	1						DIA92
8	04612-00350	CIR CLIP, EXTERNAL	1						
9	08101-06807	BEARING BALL	1						#6807
10	38430-2155-1	SNAP RING	1						
11	T2615-25661	RING, PISTON	1						
12	T2615-25671	RING, PISTON v	1						
13	T2615-25681	SPACER	1						
14	T2615-25711	PLATE, BRAKE	1						
15	T2615-25721	PLATE, RETURN	1						
16	T2615-25742	PLATE,PRESSURE	1						
17	T2615-25771	DISK, CLUTCH	3						
18	T2615-25782	PLATE,CLUTCH	3						

----> Old replace New <---- New replace Old <-X-> Not interchangeable
<---> Interchangeable <-O-> Interchangeable with another part(s)
* Please place an order assy(*)

https://tractormanualz.com/

TC2-G2C3003

PTO CLUTCH GROUP

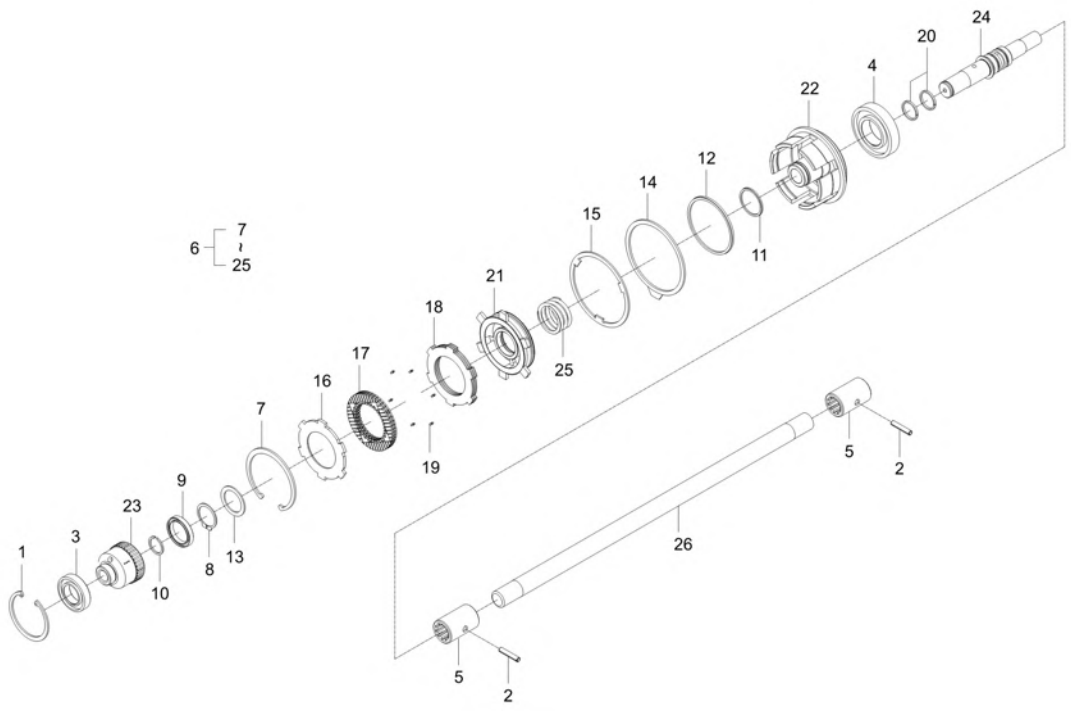

A : CK3510SEB

No.	Part Number	Description	Qty A	Qty B	Qty C	Qty D	Qty E	I.C	Remark
19	T2615-25791	RUBBER	6						
20	T5225-26111	SEALING	2						
20	TC22-0144A	RING, SEAL	2					<----->	
21	T5520-23651	PISTON	1						
22	TC22-0053B	BODY, PTO CLUTCH	1						
23	TC22-0054B	HUB, SPLINE	1						
24	TC22-0055B	SHAFT, PTO CLUTCH	1						
25	TC22-0094A	SPRING	1						
26	TC22-0083B	SHAFT, DRIVE PTO	1						

----> Old replace New
<----> Interchangeable
* Please place an order assy(*)
<---- New replace Old
<-O-> Interchangeable with another part(s)
<-X-> Not interchangeable

https://tractormanualz.com/

TC2-G211005

CLUTCH GROUP

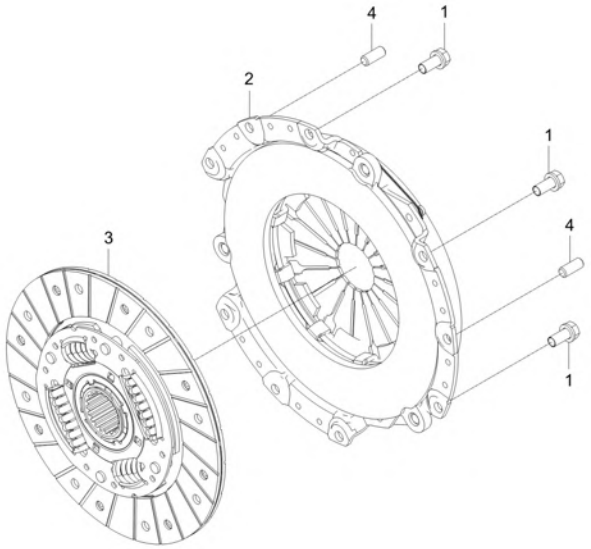

A : CK3510SEB

No.	Part Number	Description	Qty A	Qty B	Qty C	Qty D	Qty E	I.C	Remark
1	01123-50818	BOLT, WASHER	6						M8*P1.25
2	TC22-0044B	ASSY COVER, CLUTCH	1						
3	TC22-0045A	ASSY DISK, CLUTCH	1						
4	05012-00818	PIN, PARALLEL	3						

----> Old replace New
<---- New replace Old
<-X-> Not interchangeable
<---> Interchangeable
<-O-> Interchangeable with another part(s)
* Please place an order assy(*)

https://tractormanualz.com/

TC2-G212008

CLUTCH RELEASE GROUP

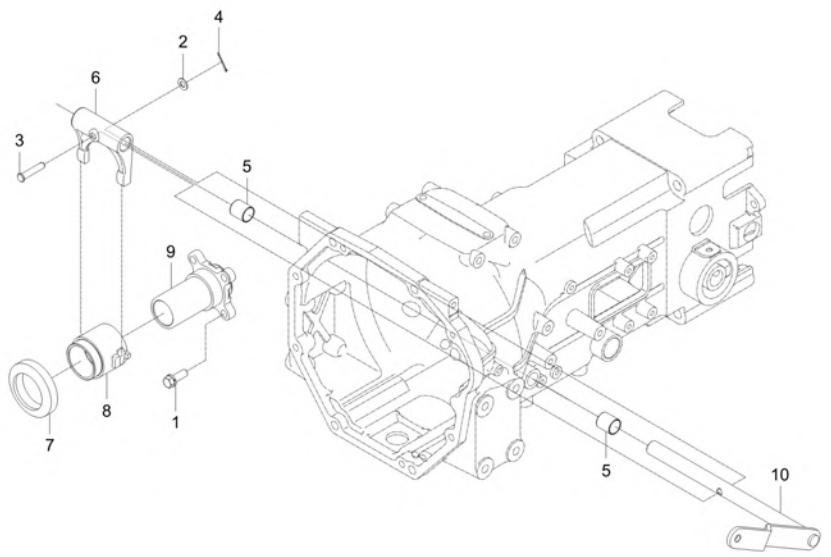

A : CK3510SEB

No.	Part Number	Description	Qty A	Qty B	Qty C	Qty D	Qty E	I.C	Remark
1	01133-51028	BOLT	4						M10*1.25
2	04012-50080	WASHER, PLAIN	1						M8
3	05112-50840	PIN,JOINT	1						
4	05511-50220	PIN, SPLIT	1						DIA1.8XL20
5	08511-02025	BUSH	2						MB2025DU
6	T2185-14723	FORK,CLUTCH RELEASE	1						
7	T2610-14831	BEARING, RELEASE v	1						RCT5582RU KOYO
8	TC22-0047C	HUB, CLUTCH RELEASE	1						
9	TC22-0048B	COVER, GUIDE	1						
10	TC22-0088B	LEVER, CLUTCH	1						

----> Old replace New
<---- New replace Old
<-X-> Not interchangeable
<---> Interchangeable
<-O-> Interchangeable with another part(s)
* Please place an order assy(*)

https://tractormanualz.com/

TC2-G221001

FRONT COVER GORUP

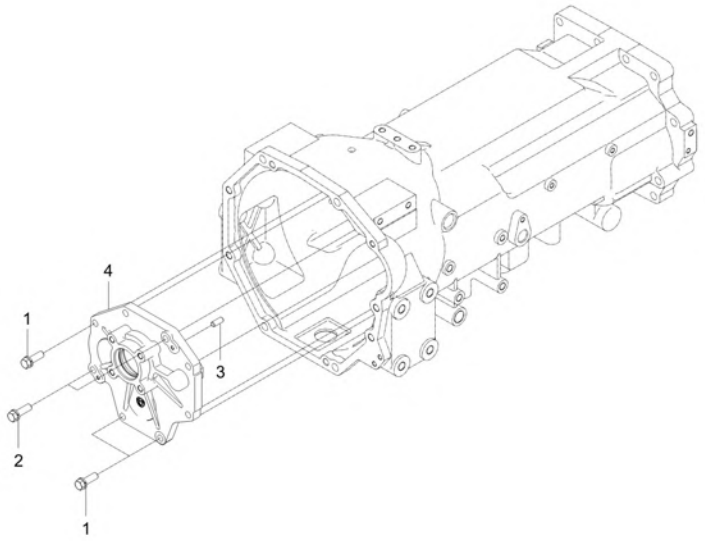

A : CK3510SEB

No.	Part Number	Description	Qty A	Qty B	Qty C	Qty D	Qty E	I.C	Remark
1	01133-51030	WITH WASHER BOLT	6						M10XP1.25
2	01133-51032	BOLT	2						M10*P1.25
3	05012-00818	PIN, PARALLEL	2						
4	TC22-0043C	CASE, PROPELLER SHAFT	1						

----> Old replace New
<---- New replace Old
<-X-> Not interchangeable
<---> Interchangeable
<-O-> Interchangeable with another part(s)
* Please place an order assy(*)

https://tractormanualz.com/

TC2-G222007

CLUTCH HOUSING GROUP

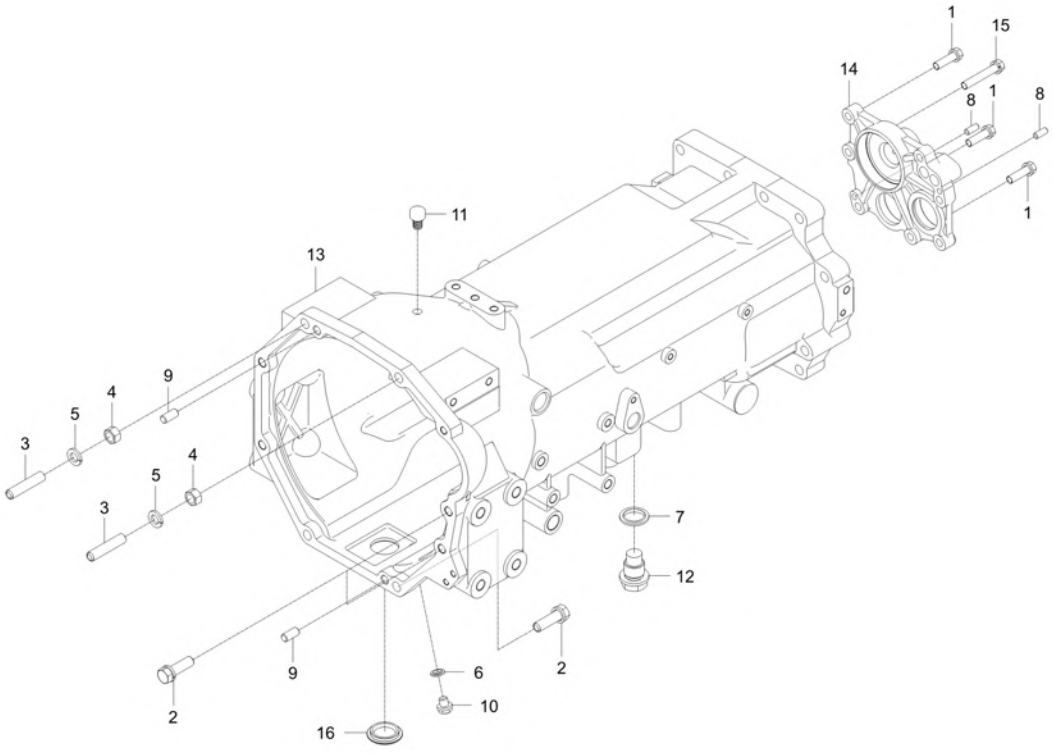

A : CK3510SEB

No.	Part Number	Description	Qty A	Qty B	Qty C	Qty D	Qty E	I.C	Remark
1	01133-51035	WASHER BOLT	6						M10X1.25
2	01177-51240	BOLT v	6						M12XP1.25 (9T/스프
3	01574-51240	STUD	2						M12*1.25*30
4	02176-50120	NUT	2						M12XP1.25
5	04512-50120	SPRING WASHER	2						M12
6	04717-01000	WASHER, SEAL	1						M10
7	04717-02650	WASHER, SEAL	1						
8	05012-00818	PIN, PARALLEL	2						
9	05012-01020	PIN, STRAIGHT	2						
10	06331-45010	PLUG v	1						M10*1.25
11	T2305-43883	PLUG v	1						
12	T4125-14261	PLUG	1						
13	TC22-0041C	HOUSING, CLUTCH v	1						
13	TC22-0041D	HOUSING, CLUTCH	1					<------	
14	TC22-0049B	COVER, BEARING C/H	1						
15	01133-51060	BOLT, WASHER	1						
16	38630-4484-3	PLUG	1						

----> Old replace New <---- New replace Old <-X-> Not interchangeable
<---> Interchangeable <-O-> Interchangeable with another part(s)
* Please place an order assy(*)

https://tractormanualz.com/

TC2-G224011

TRANSMISSION CASE GROUP

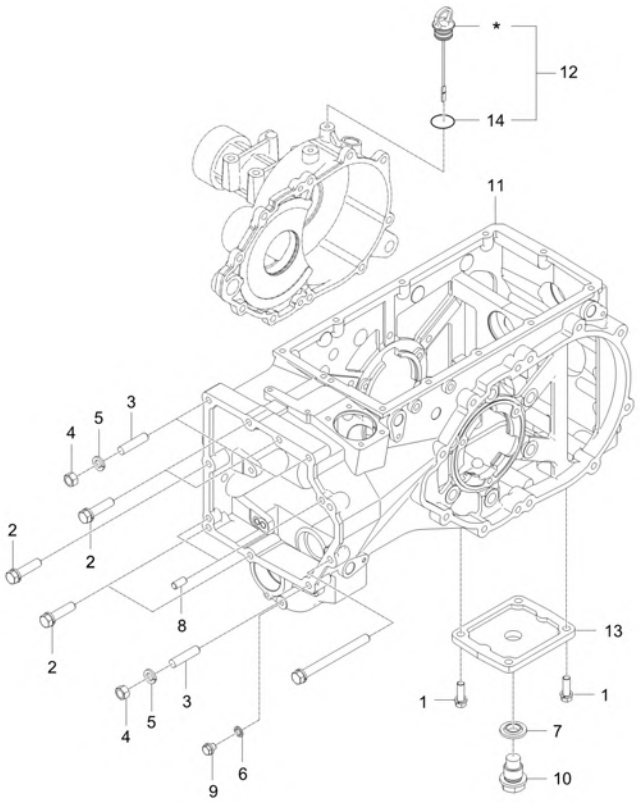

A : CK3510SEB

No.	Part Number	Description	Qty A	Qty B	Qty C	Qty D	Qty E	I.C	Remark
1	01177-51030	BOLT	4						M10XP1.25 (9T)
2	01177-51250	BOLT	8						M12XP1.25 (9T)
3	01574-51250	STUD V	2						
4	02176-50120	NUT	2						M12XP1.25
5	04512-50120	SPRING WASHER	2						M12
6	04717-01000	WASHER, SEAL	1						M10
7	04717-02650	WASHER, SEAL	1						PS3/4
8	05012-01020	PIN, STRAIGHT	2						DIA10XL20
9	06331-45010	PLUG v	1						M10XP1.25
10	T4125-14261	PLUG	1						
11	T5815-21116	CASE,TRANSMISSION	1						
12	T5815-23973	GAUGE OIL	1						
12	T5815-23974	GAUGE,OIL	1					<------	
13	T5815-24171	COVER	1						
14	04811-00200	O RING v	2						DIA19.8

----> Old replace New <---- New replace Old <-X-> Not interchangeable
<---> Interchangeable <-O-> Interchangeable with another part(s)
* Please place an order assy(*)

https://tractormanualz.com/

TC2-G241002

MAIN SHIFT SHAFT GROUP

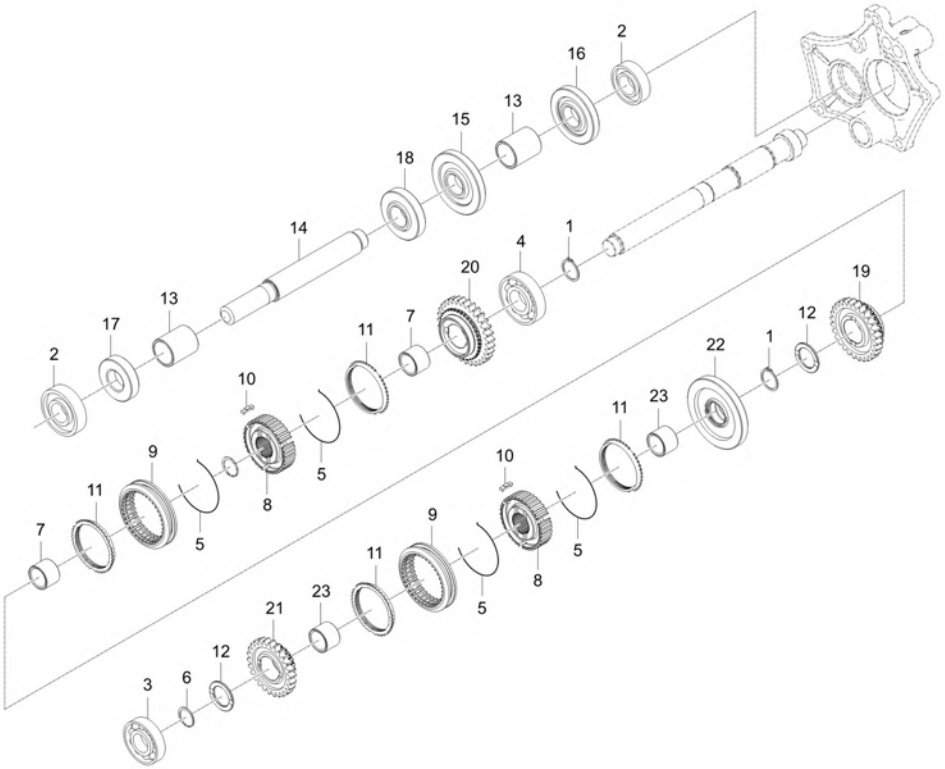

A : CK3510SEB

No.	Part Number	Description	Qty A	Qty B	Qty C	Qty D	Qty E	I.C	Remark
1	04612-00300	SNAP RING	2						
2	08101-06205	BEARING BALL dnr v	2						DIA25
3	08101-06205	BEARING BALL dnr v	1						DIA25
4	08101-06306	BEARING, BALL	1						#6306
5	38360-2178-1	SYNCHRONIZER SPRING	4						DIA1.2
6	38430-2554-1	RING, SNAP	1						
7	38435-2178-1	RING, IN	2						
8	T2185-21651	HUB, SYNCHRO	2						
9	T2610-21754	SHIFTER	2						
10	T2610-21812	SYNCHRONIZER KEY	6						
11	T4240-21792	RING, SYNCHRONIZER	4						
12	T4810-22581	COLLAR, THRUST	2						
13	T5815-21571	BUSHING	2						
14	TC22-0063A	SHAFT, COUNTER	1						
15	TC22-0064B	GEAR 26	1						
16	TC22-0065A	GEAR-23	1						
17	TC22-0066A	GEAR-20	1						
18	TC22-0067A	GEAR-17	1						

----> Old replace New
<---> Interchangeable
* Please place an order assy(*)
<---- New replace Old
<-O-> Interchangeable with another part(s)
<-X-> Not interchangeable

https://tractormanualz.com/

TC2-G241002

MAIN SHIFT SHAFT GROUP

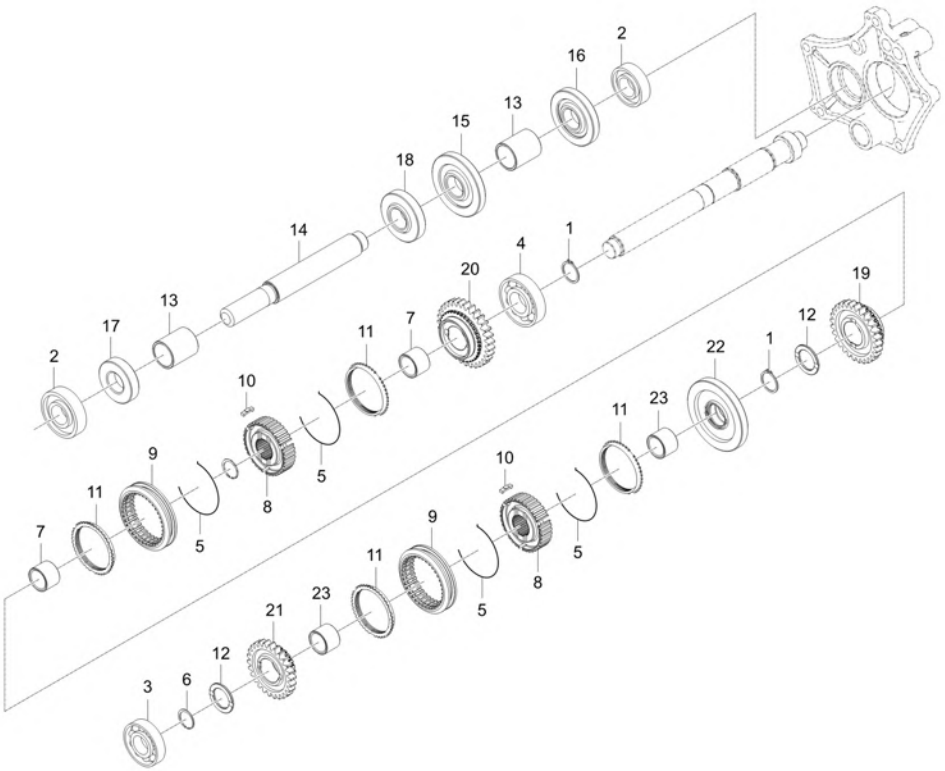

A : CK3510SEB

No.	Part Number	Description	Qty A	Qty B	Qty C	Qty D	Qty E	I.C	Remark
19	TC22-0068B	GEAR 27	1						
20	TC22-0069B	GEAR 30	1						
21	TC22-0070B	GEAR 33	1						
22	TC22-0071B	GEAR 36	1						
22	TC22-0071C	GEAR-36	1					<----->	
23	TC22-0072A	RING-INNER	2						

----> Old replace New
<---- New replace Old
<-X-> Not interchangeable
<---> Interchangeable
<-O-> Interchangeable with another part(s)
* Please place an order assy(*)

https://tractormanualz.com/

TC2-G242002

MAIN SHIFT FORK GROUP

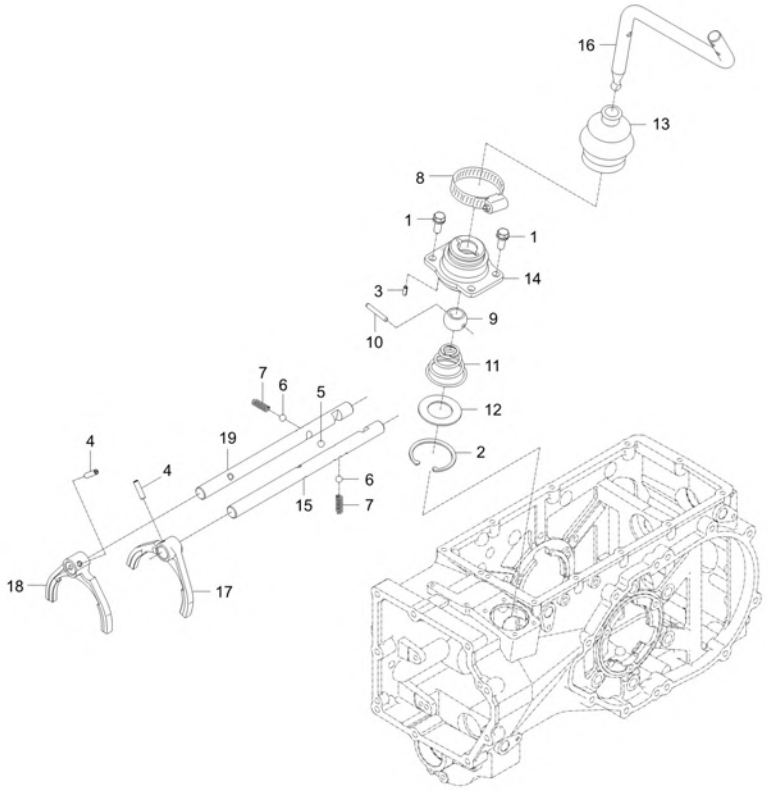

A : CK3510SEB

No.	Part Number	Description	Qty A	Qty B	Qty C	Qty D	Qty E	I.C	Remark
1	01123-50820	BOLT, WASHER v	4						M8XP1.25
2	04611-00520	SNAP RING	1						
3	05411-00412	OB PIN,SPRING	1						
4	05411-00625	PIN, SPRING v	2						DIA6.4XL25
5	07715-00401	BALL v	1						
6	07715-01605	BALL,STEEL	2						5/16"
7	62331-1853-2	SPRING	2						DIA1.4
8	E7300-11781	CLAMP, HOSE	1						DIA65스탠 65#
9	T5715-21331	BALL	1						
10	T5715-21342	PIN dnr v	1						
11	T5715-21361	SPRING,CONE	1						
12	T5715-21371	WASHER	1						
12	T5715-21372	Washer, Plain	1					<------	
13	T5715-21382	JABARA dnr v	1						
13	T5715-21383	JABARA v	1					<------	
14	T5715-23152	COVER, RANGE SHIFT	1						
15	T5815-21242	FORK, MAIN SPEED CHANGE	1						
16	T5815-23162	LEVER, MAIN SHIFT	1						

----> Old replace New
<----> Interchangeable
* Please place an order assy(*)
<---- New replace Old
<-O-> Interchangeable with another part(s)
<-X-> Not interchangeable

https://tractormanualz.com/

TC2-G242002

MAIN SHIFT FORK GROUP

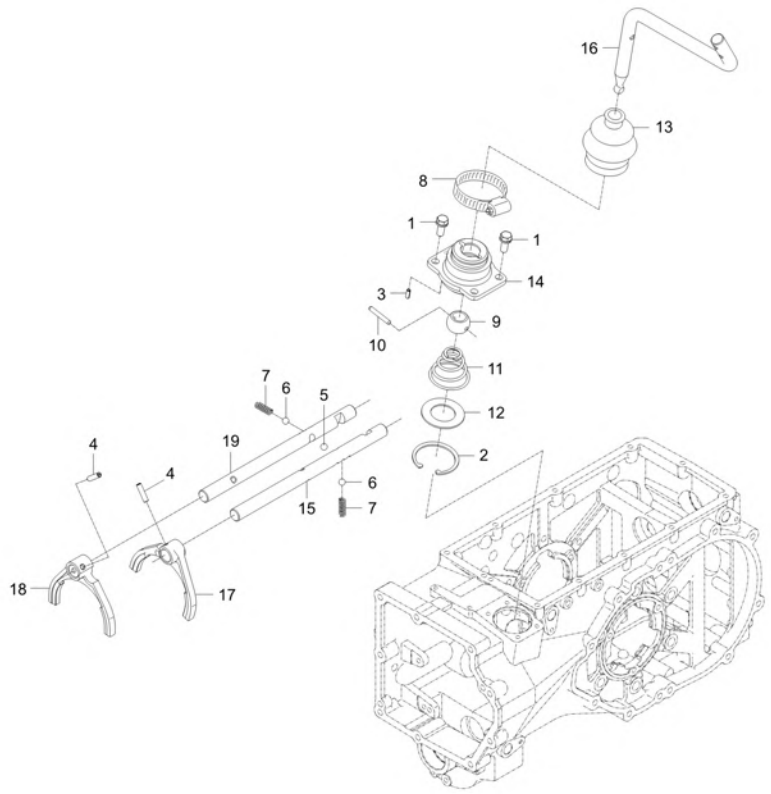

A : CK3510SEB

No.	Part Number	Description	Qty A	Qty B	Qty C	Qty D	Qty E	I.C	Remark
17	TC22-0085B	FORK, MAIN SHIFT 3,4	1						
18	TC22-0086B	ROD, FORK 1,2	1						
19	TC22-0087A	ROD, FORK-(3,4)	1						

----> Old replace New
<---- New replace Old
<-X-> Not interchangeable
<---> Interchangeable
<-O-> Interchangeable with another part(s)
* Please place an order assy(*)

https://tractormanualz.com/

TC2-G251002

SHUTTLE SHAFT GROUP

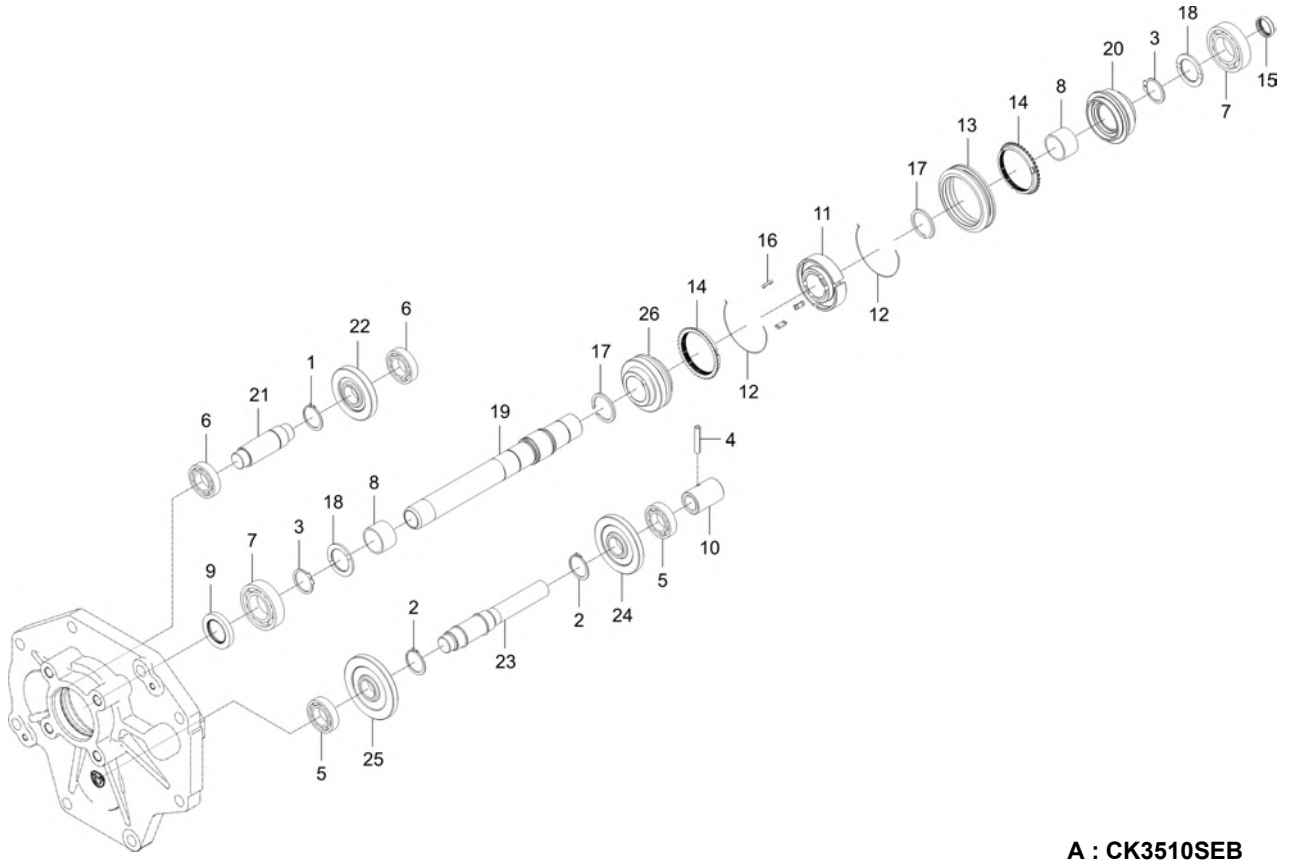

A : CK3510SEB

No.	Part Number	Description	Qty A	Qty B	Qty C	Qty D	Qty E	I.C	Remark
1	04612-00300	SNAP RING	1						
2	04612-00300	SNAP RING	2						
3	04612-00350	CIR CLIP, EXTERNAL	2						
4	05411-00635	PIN, SPRING	1						DIA5*36
5	08101-06205	BEARING BALL dnr v	2						DIA25
6	08101-06205	BEARING BALL dnr v	2						DIA25
7	08101-06207	BEARING BALL	2						#6207
8	08823-54027	BEARING,NEEDLE v	2						NTN,K35402 7
9	09500-35558	SEAL,OIL	1						
10	T4620-44592	COUPLING	1						
11	T2185-22812	HUB SPLINE v	1						
12	T2185-22824	SPRING, SYNCHRONIZER dnr v	2						PI1.2
13	T2185-22846	SHIFTER dnr v	1						
14	T2185-22852	RING,SYNCHRONIER	2						
15	T2440-21361	SEAL, OIL	1						
16	T2610-21812	SYNCHRONIZER KEY	3						
17	T4810-22852	CIR CLIP, EXTERNAL	2						
18	T4810-24541	COLLAR, THRUST	2						

----> Old replace New <---- New replace Old <-X-> Not interchangeable
<---> Interchangeable <-O-> Interchangeable with another part(s)
* Please place an order assy(*)

https://tractormanualz.com/

TC2-G251002

SHUTTLE SHAFT GROUP

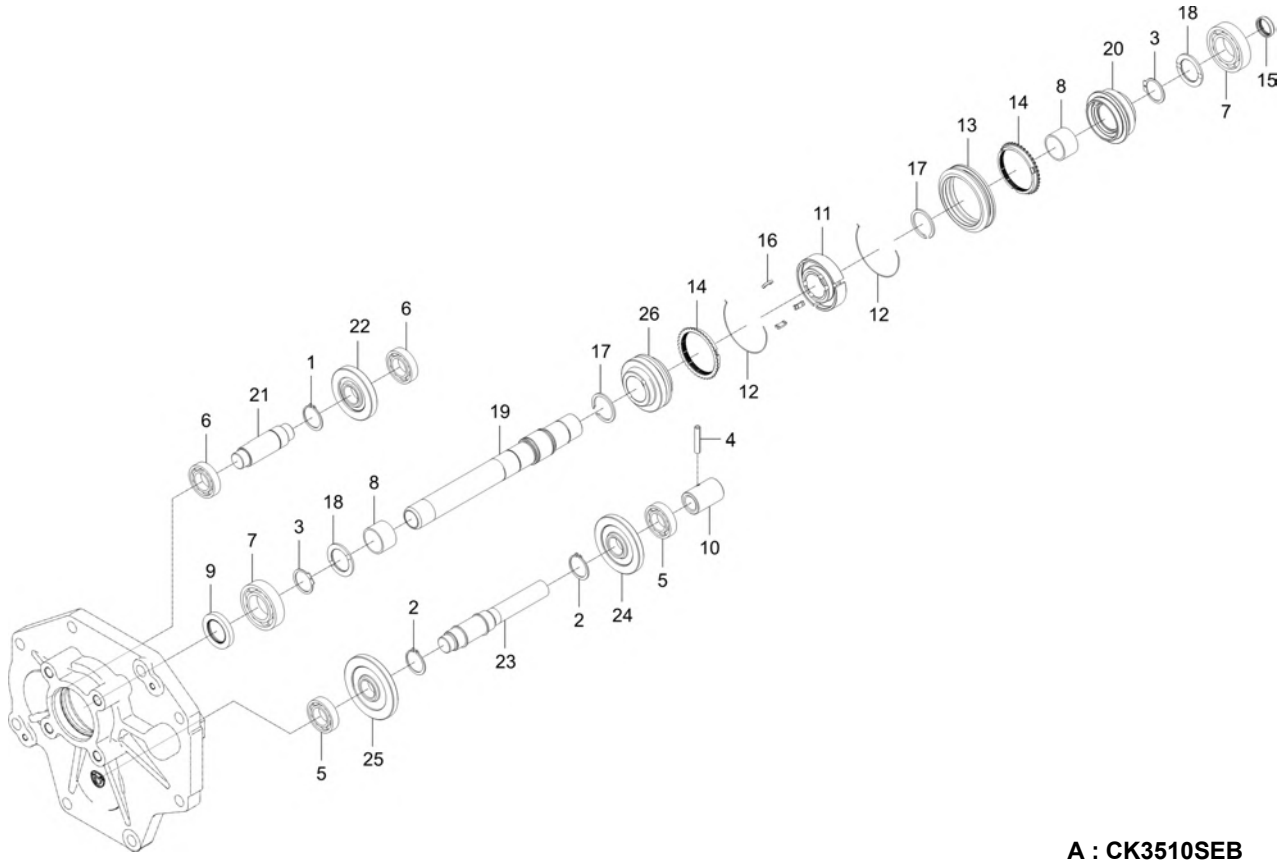

A : CK3510SEB

No.	Part Number	Description	Qty A	Qty B	Qty C	Qty D	Qty E	I.C	Remark
19	TC22-0074B	SHAFT, SHUTTLE	1						
20	TC22-0075B	GEAR 22	1						
21	TC22-0076A	SHAFT, IDLE-REVERSE	1						
22	TC22-0077A	GEAR-25	1						
23	TC22-0078A	SHAFT, COUNTER-MAIN	1						
24	TC22-0079A	GEAR-28	1						
25	TC22-0080A	GEAR-31	1						
26	TC22-0081B	GEAR 25	1						

----> Old replace New
<----> Interchangeable
* Please place an order assy(*)
<---- New replace Old
<-O-> Interchangeable with another part(s)
<-X-> Not interchangeable

https://tractormanualz.com/

TC2-G252002

SHUTTLE SHIFT FORK GROUP

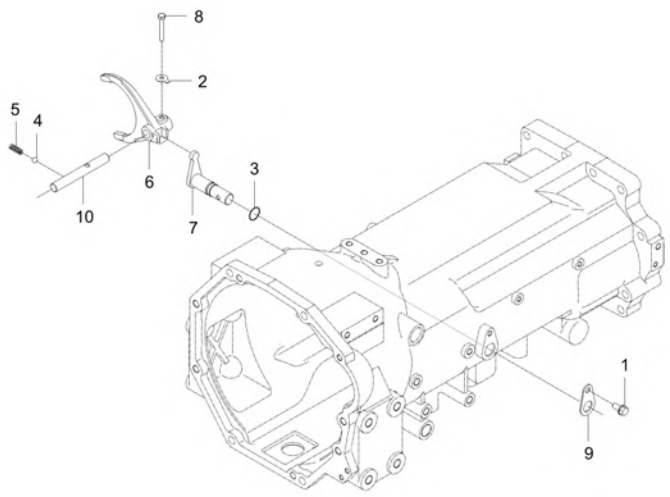

A : CK3510SEB

No.	Part Number	Description	Qty A	Qty B	Qty C	Qty D	Qty E	I.C	Remark
1	01754-50816	BOLT, FLANGE	1						M8XP1.25
2	04111-50060	WASHER v	1						
3	04811-00160	O RING	1						DIA15.8
4	07715-01605	BALL,STEEL	1						5/16"
5	62331-1853-2	SPRING	1						DIA1.4
6	T2185-22151	FORK, SHIFT(SHUTTLE)	1						
7	T2185-22171	ARM, SHIFT(SHUTTLE)	1						
8	T2610-22171	BOLT	1						
9	T4620-44331	STOPPER obs v	1						T2.0
10	TC22-0062A	ROD, FORK-F/R	1						

----> Old replace New
<---- New replace Old
<-X-> Not interchangeable
<---> Interchangeable
<-O-> Interchangeable with another part(s)
* Please place an order assy(*)

https://tractormanualz.com/

TC2-G281005

SPIRAL BEVEL GEAR GROUP

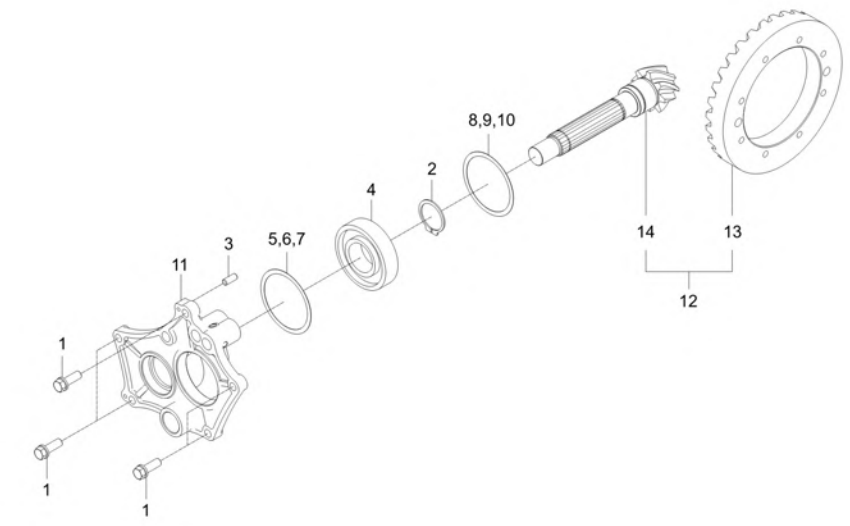

A : CK3510SEB

No.	Part Number	Description	Qty A	Qty B	Qty C	Qty D	Qty E	I.C	Remark
1	01133-51030	WITH WASHER BOLT	5						M10XP1.25
2	04612-00400	CIR CLIP, EXTERNAL	1						
3	05012-00818	PIN, PARALLEL	2						
4	08101-06308	BALL BEARING	1						#6308
5	K5400-14572	SHIM obs v	1						T0.1
6	K5400-14581	SHIM	1						T0.2
6	K5400-14582	SHIM	1					<------	T0.2
7	K5400-14591	SHIM	1						T0.5
7	K5400-14592	SHIM v	1					<------	T0.5
8	T4520-44081	SHIM 0.1 v	1						T0.1
9	T4520-44091	SHIM 0.2	1						T0.2
10	T4520-44101	SHIM 0.4 dnr v	1						T0.4
11	T5815-21122	COVER, BEARING	1						
12	T5815-26112	SPIRAL BEVEL GEAR ASSEMBLY v	1						
13	T2185-26121	GEAR,SPRIAL BEVEL 35 v	1						
14	T5815-22112	PINION, SPIRAL BEVEL dnr v	1						

----> Old replace New
<----> Interchangeable
* Please place an order assy(*)
<---- New replace Old
<-O-> Interchangeable with another part(s)
<-X-> Not interchangeable

https://tractormanualz.com/

TC2-G311003

FRONT AXLE SUPPORT GROUP

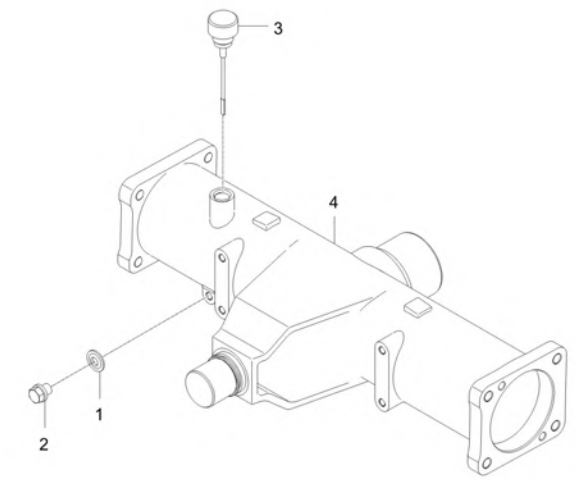

A : CK3510SEB

No.	Part Number	Description	Qty A	Qty B	Qty C	Qty D	Qty E	I.C	Remark
1	04717-01000	WASHER, SEAL	1						M10
2	06331-45010	PLUG v	1						M10XP1.25
3	T5210-42101	GAUGE, OIL - DIPSTICK dnr v	1 ~ VJJ700088						
3	T5210-42102	OIL GAUGE v	1 VJJ700089 ~ WJJ700036					<----->	
4	T5815-42144	TRK SUPPORT, FRONT AXLE RR	1						
4	T5815-42145	SUPPORT, FRONT AXLE RR	1					<----->	

----> Old replace New
<----> Interchangeable
* Please place an order assy(*)
<---- New replace Old
<-O-> Interchangeable with another part(s)
<-X-> Not interchangeable

https://tractormanualz.com/

TC2-G312001

FRONT DIFF SYSTEM GROUP

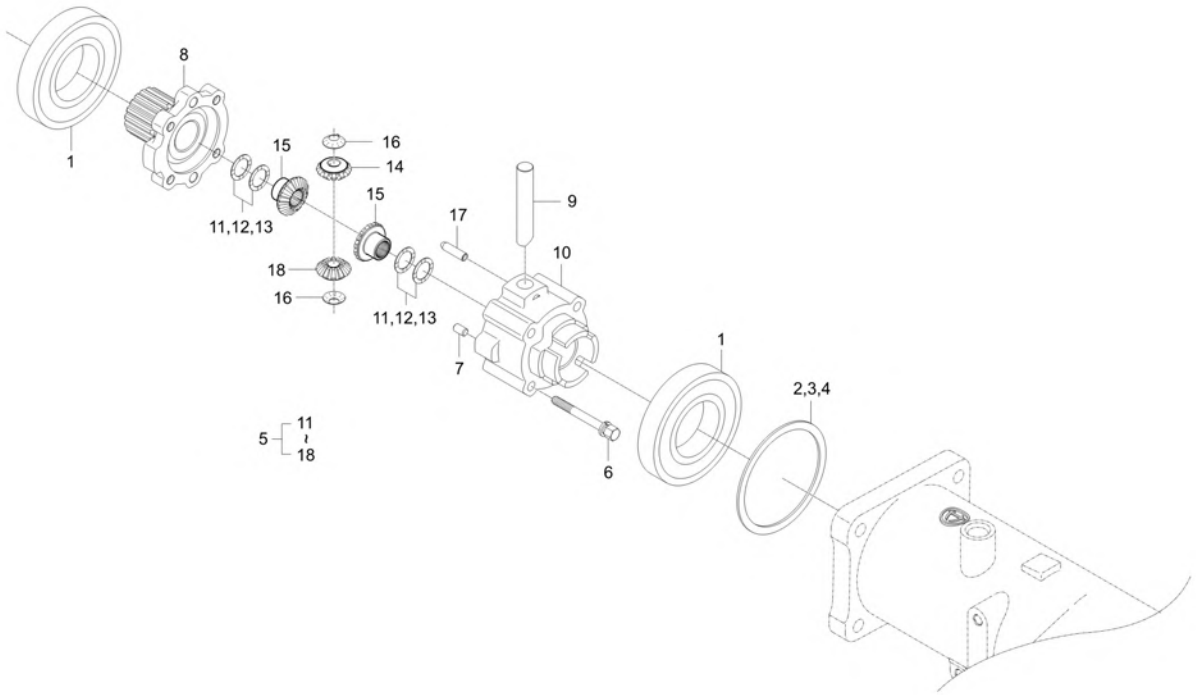

A : CK3510SEB

No.	Part Number	Description	Qty A	Qty B	Qty C	Qty D	Qty E	I.C	Remark
1	08101-06212	BEARING, BALL	2						
2	T2630-43011	SHIM 0.8	1						T0.8
3	T2630-43021	SHIM 1.0 v	1						T1.0
4	T2630-43031	SHIM 1.2	1						T1.2
5	T2630-43102	ASSY DIFF FRONT dnr v	1						
6	01133-51075	BOLT, WASHER	4						M10XP1.25
7	05012-01018	PIN, STRAIGHT	2						
8	T2630-42321	COVER, DIFF. CASE v	1						
9	T2630-43111	SHAFT, DIFF. PINION	1						
10	T2630-43121	CASE, FRONT DIFF	1						
11	T4520-43071	SHIM, 0.8	2						T0.8
12	T4520-43081	SHIM, 0.1	2						T1.0
13	T4520-43091	SHIM, 1.2	2						T1.2
14	T4520-43131	PINION, DIFFERENTIAL dnr v	2						
15	T4520-43141	GEAR, DIFF SIDE v	2						
16	T4520-43151	WASHER, DIFF PINION	2						
17	T4520-43171	PIN, PARALLEL	1						
18	T4682-43132	PINION, DIFFERENTIAL	2						

----> Old replace New
<----> Interchangeable
* Please place an order assy(*)
<---- New replace Old
<-O-> Interchangeable with another part(s)
<-X-> Not interchangeable

https://tractormanualz.com/

TC2-G313001

BEVEL PINION SHAFT GROUP

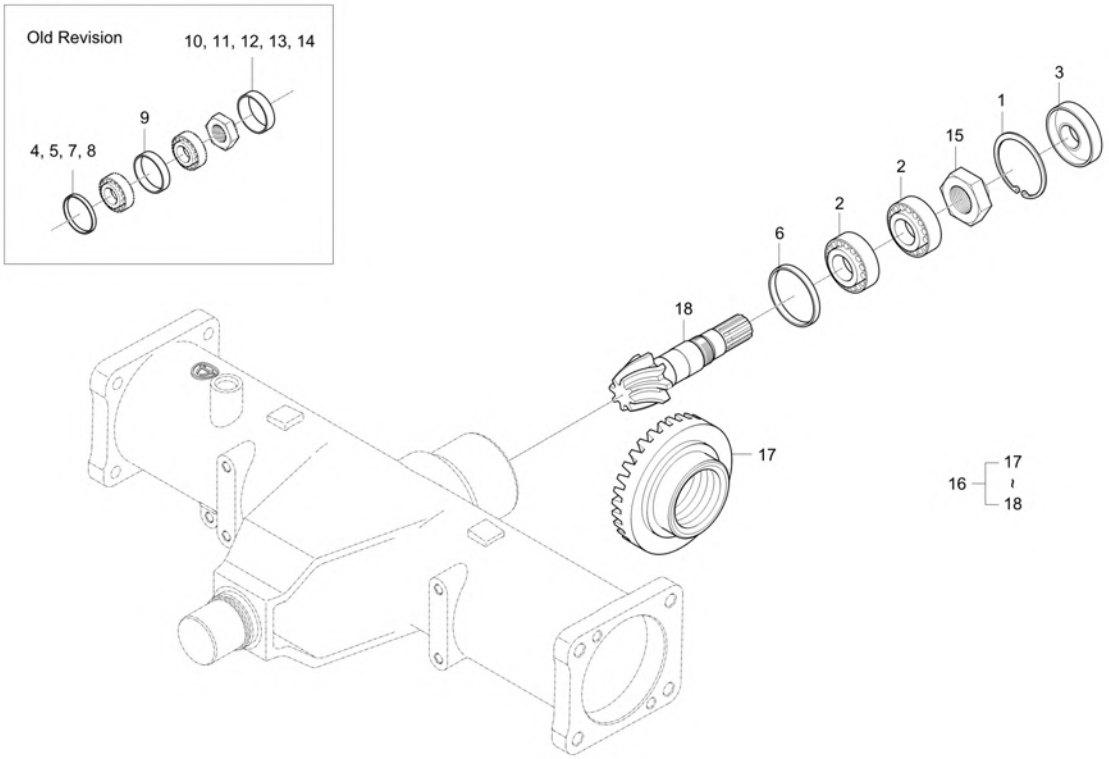

A : CK3510SEB

No.	Part Number	Description	Qty A	Qty B	Qty C	Qty D	Qty E	I.C	Remark
1	04611-00720	RING,SNAP	1						DIA72
2	08711-30306	BEARING,TAPER ROLLER	2						#30306
3	T2185-42291	SEAL,OIL	1						
4	T2185-42451	COLLAR1,ADJUST	1						DIA73*T3.0
5	T2185-42461	COLLAR1,ADJUST	1						DIA73*T3.0
6	T2185-42471	COLLAR1,ADJUST	1						DIA73*T3.0
7	T2185-42481	COLLAR1,ADJUST	1						DIA73*T3.0
8	T2185-42491	COLLAR1,ADJUST	1						DIA73*T3.0
9	T2185-42751	SPACER	1						DIA73*T3.0
10	T2185-42761	COLLAR2,ADJUST	1						DIA73*T3.0
11	T2185-42771	COLLAR2,ADJUST	1						DIA73*T3.0
12	T2185-42781	COLLAR2,ADJUST	1						DIA73*T3.0
13	T2185-42791	COLLAR2,ADJUST	1						DIA73*T3.0
14	T2185-42801	COLLAR2,ADJUST	1						DIA73*T3.0
15	T4620-21591	NUT,LOOK(28)	1						
16	T5815-43201	SPIRAL BEVEL GEAR ASSY	1						
16	T5815-43202	SPIRAL BEVEL GEAR ASSY	1					<--O-->	
17	T5815-42211	GEAR,21 SPIRAL BEVEL v	1						

----> Old replace New
<---> Interchangeable
* Please place an order assy(*)
<---- New replace Old
<-O-> Interchangeable with another part(s)
<-X-> Not interchangeable

https://tractormanualz.com/

TC2-G313001

BEVEL PINION SHAFT GROUP

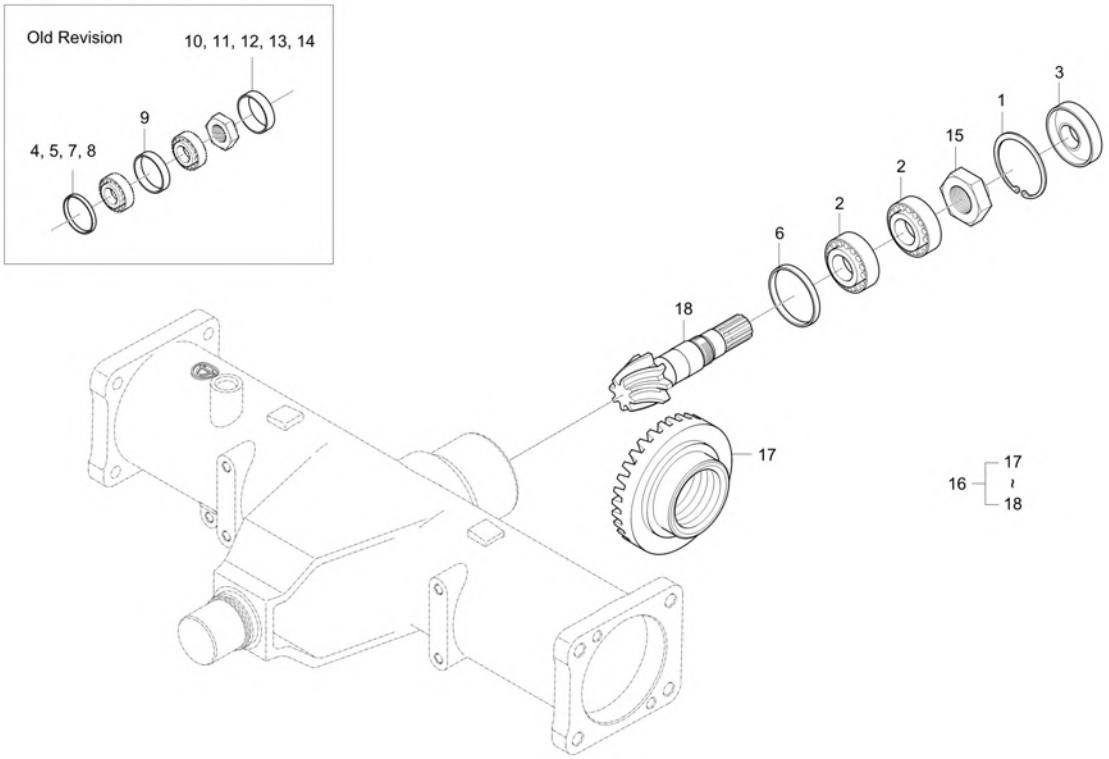

A : CK3510SEB

No.	Part Number	Description	Qty A	Qty B	Qty C	Qty D	Qty E	I.C	Remark
17	T5815-42212	GEAR, 19 SPRIAL BEVEL v	1					<--O-->	
18	T5815-43211	SHAFT, 9 BEVEL PINION obs v	1						
18	T5815-43212	shalf bevel pinion v	1					<--O-->	

----> Old replace New
<---> Interchangeable
* Please place an order assy(*)
<---- New replace Old
<-O-> Interchangeable with another part(s)
<-X-> Not interchangeable

https://tractormanualz.com/

TC2-G314003

BEVEL GEAR CASE GROUP

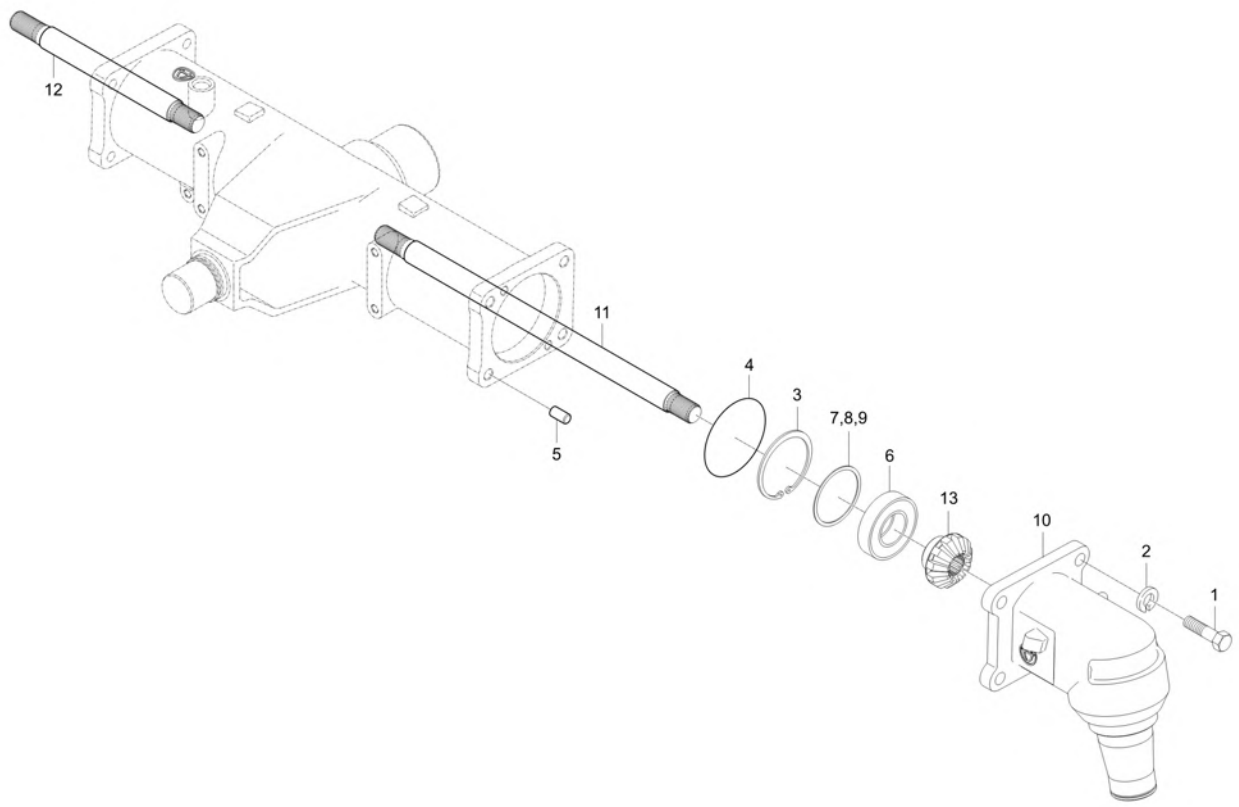

A : CK3510SEB

No.	Part Number	Description	Qty A	Qty B	Qty C	Qty D	Qty E	I.C	Remark
1	01173-51440	Hex Head Cap Screw v	8						M14P1.5*40
2	04512-50140	SPRING WASHER	8						
3	04611-00720	RING,SNAP	2						DIA72
4	04811-51050	O RING	2						
5	05012-01020	PIN, STRAIGHT	4						
6	08101-06207	BEARING BALL	2						#6207
7	T2185-43871	SHIM, 0.8 dnr v	2						
8	T2185-43881	SHIM, 1.0 dnr v	2						
9	T2185-43891	SHIM, 1.2 obs v	2						
10	T5815-43442	BEVEL GEAR CASE	2						
10	T5815-43443	BEVEL GEAR CASE	2					<--O-->	
11	T5815-43811	SHAFT,DIFF. GEAR LH	1						
12	T5815-43821	SHAFT,DIFF. GEAR RH	1						
13	T5815-43841	GEAR, 11 BEVEL	2						

----> Old replace New
<---- New replace Old
<-X-> Not interchangeable
<---> Interchangeable
<-O-> Interchangeable with another part(s)
* Please place an order assy(*)

https://tractormanualz.com/

TC2-G316003

FRONT AXLE CASE GROUP

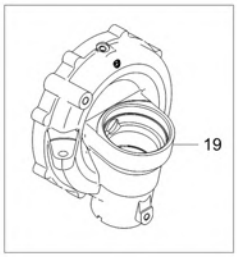

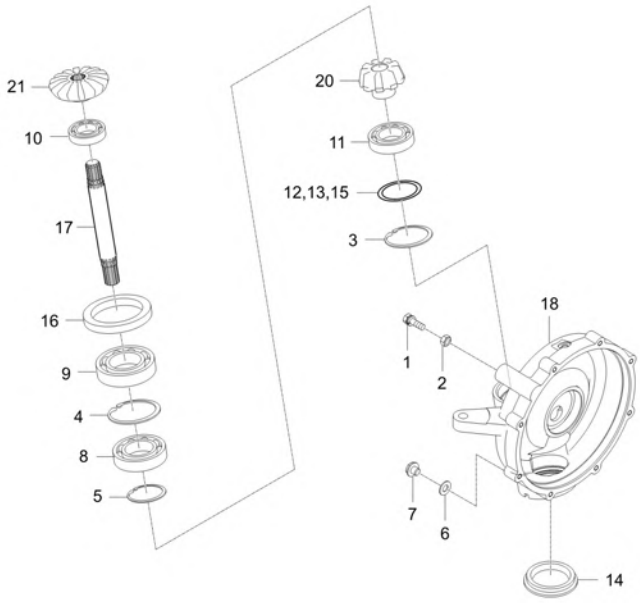

A : CK3510SEB

No.	Part Number	Description	Qty A	Qty B	Qty C	Qty D	Qty E	I.C	Remark
1	01175-51250	BOLT	2						7T
2	02076-50120	NUT	2						
3	04611-00720	RING,SNAP	2						DIA72
4	04611-00800	RING, SNAP	2						
5	04612-00500	SNAP RING	2						
6	04717-01000	WASHER, SEAL	2						M10
7	06331-45010	PLUG v	2						M10*1.25
8	08101-06010	BEARING,BALL	2						#6010
9	08101-06012	BEARING,BALL	2						
10	08101-06206	BEARING, BALL v	2						#6206
11	08101-06207	BEARING BALL	2						#6207
12	T2185-42361	SHIM1.6	2						
13	T2185-42371	SHIM1.8	2						
14	T2185-43541	PLUG	2						
15	T2185-43901	SHIM, 1.4 dnr v	2						
16	T5715-27131	OIL SEAL	2						
17	T5815-43461	BEVEL GEAR SHAFT	2						
18	T5815-43631	CASE, FRONT AXLE LH	1						

----> Old replace New
<----> Interchangeable
* Please place an order assy(*)
<---- New replace Old
<-O-> Interchangeable with another part(s)
<-X-> Not interchangeable

https://tractormanualz.com/

TC2-G316003

FRONT AXLE CASE GROUP

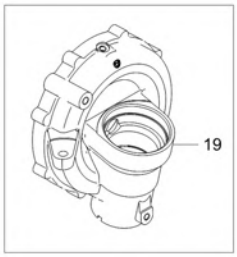

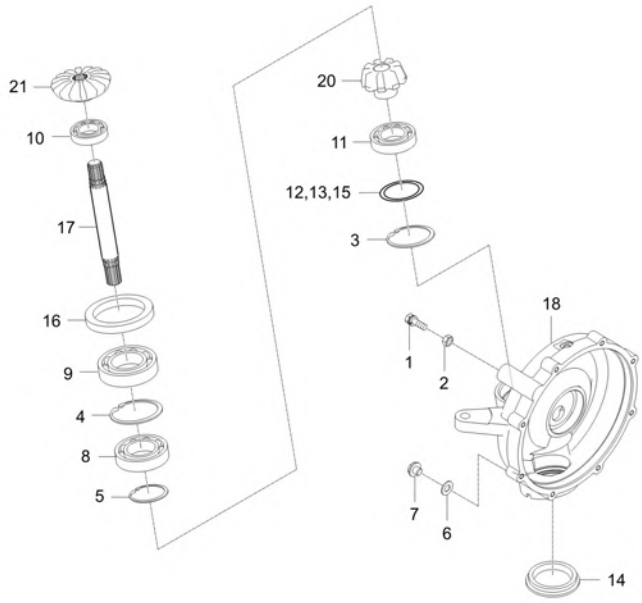

A : CK3510SEB

No.	Part Number	Description	Qty A	Qty B	Qty C	Qty D	Qty E	I.C	Remark
18	T5815-43632	CASE, FRONT AXLE LH	1					<--O-->	
19	T5815-43641	CASE, FRONT AXLE RH	1						
19	T5815-43642	CASE, FRONT AXLE RH	1					<--O-->	
20	T5815-43651	GEAR,BEVEL 9	2						
21	T5815-43831	GEAR,BEVEL 16	2						

----> Old replace New
<---> Interchangeable
* Please place an order assy(*)
<---- New replace Old
<-O-> Interchangeable with another part(s)
<-X-> Not interchangeable

https://tractormanualz.com/

TC2-G321001

STEERING CYLINDER GROUP

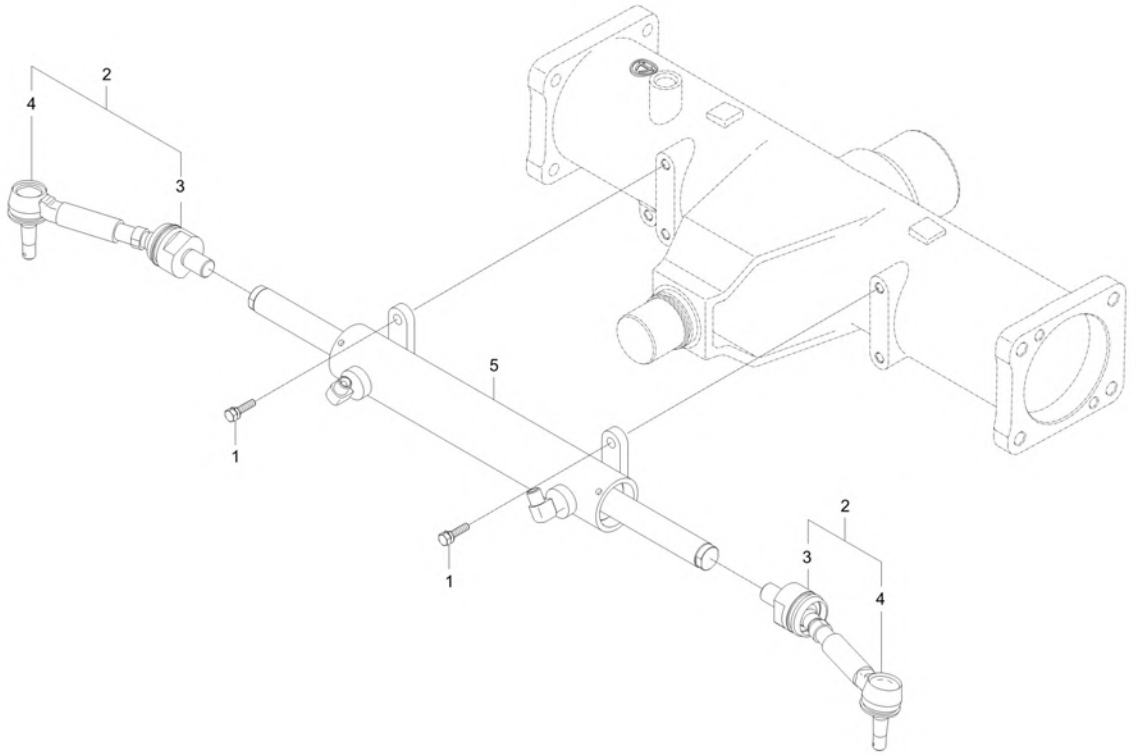

A : CK3510SEB

No.	Part Number	Description	Qty A	Qty B	Qty C	Qty D	Qty E	I.C	Remark
1	01133-51025	BOLT	4						M10XP1.25
2	T4670-63601	BALL JOINT ASSY dnr v	1						
2	T4670-63602	BALL JOINT ASSY	1 TJJ700001 ~ WJJ700036					<------	
3	TB13-0004A	ASSY END, RACK	1						
4	T4665-63622	ASSY ROD TIE v	1						
5	T5815-45201	CYLINDER ASSY	1						

----> Old replace New
<---> Interchangeable
* Please place an order assy(*)
<---- New replace Old
<-O-> Interchangeable with another part(s)
<-X-> Not interchangeable

https://tractormanualz.com/

TC2-G332001

FRONT AXLE BRACKET GROUP

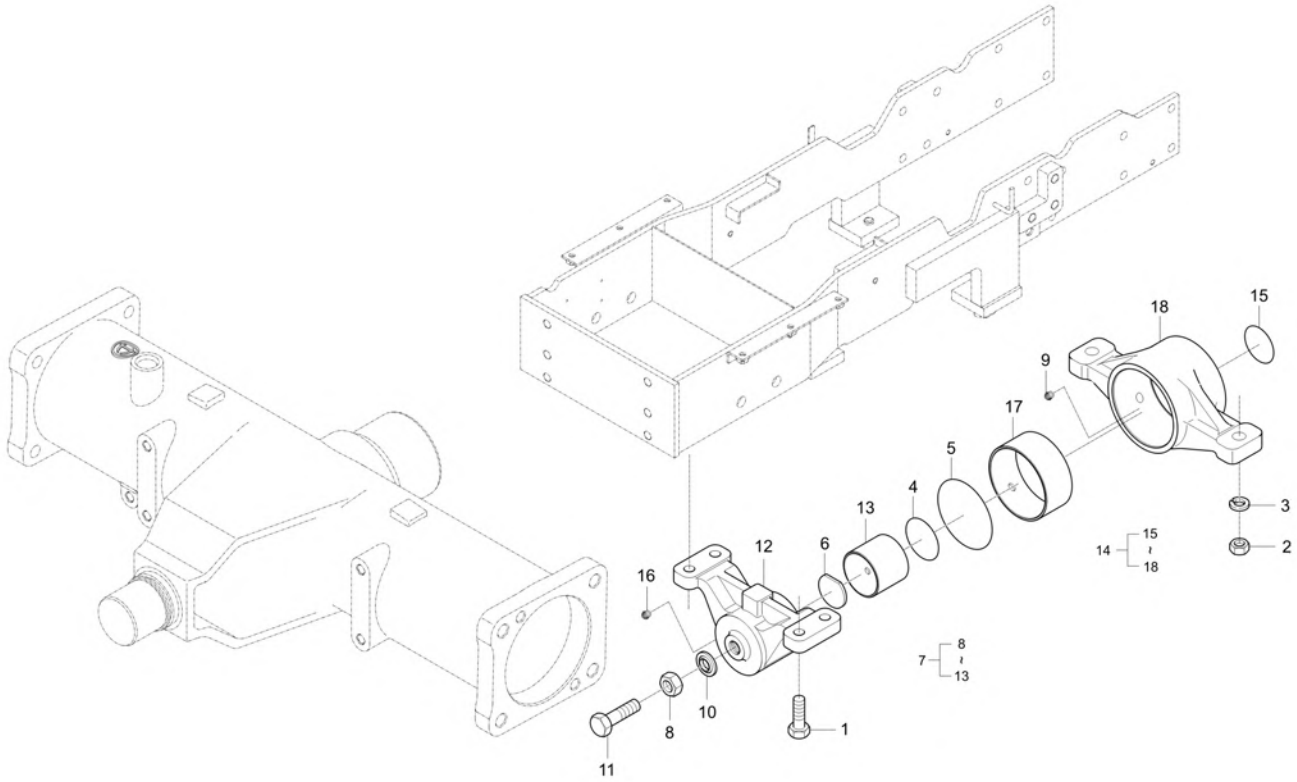

A : CK3510SEB

No.	Part Number	Description	Qty A	Qty B	Qty C	Qty D	Qty E	I.C	Remark
1	01177-51235	BOLT v	2						M12XP1.25 (9T/스프
2	02176-50140	NUT	2						M14XP1.5
3	04512-50140	SPRING WASHER	2						
4	04811-00490	O RING	1						
5	04811-50850	O RING	1						
6	38440-4467-3	COLLAR	1						
7	T2185-41602	BRACKET ASSY, FR v	1						
8	02172-50160	NUT	1						M16*P1.5
9	06613-20010	NIPPLE, GREASE 45 degree v	1						
10	38440-4475-1	WASHER SEAL	1						
11	38630-4476-1	BOLT	1						DIA16
12	T2185-41611	BRAKET,FRONT	1						
13	T4520-43601	BUSH DX v	1						50-40DX
14	T5815-41632	REAR BRAKET ASSEMBLY	1						
15	04811-00420	O RING	1						DIA41.7
16	06613-20010	NIPPLE, GREASE 45 degree v	1						
17	T2185-41691	BUSH,DX	1						
18	T5815-41621	BRACKET, REAR obs v	1						

----> Old replace New
<----> Interchangeable
* Please place an order assy(*)
<---- New replace Old
<-O-> Interchangeable with another part(s)
<-X-> Not interchangeable

https://tractormanualz.com/

TC2-G317005

FRONT AXLE GROUP

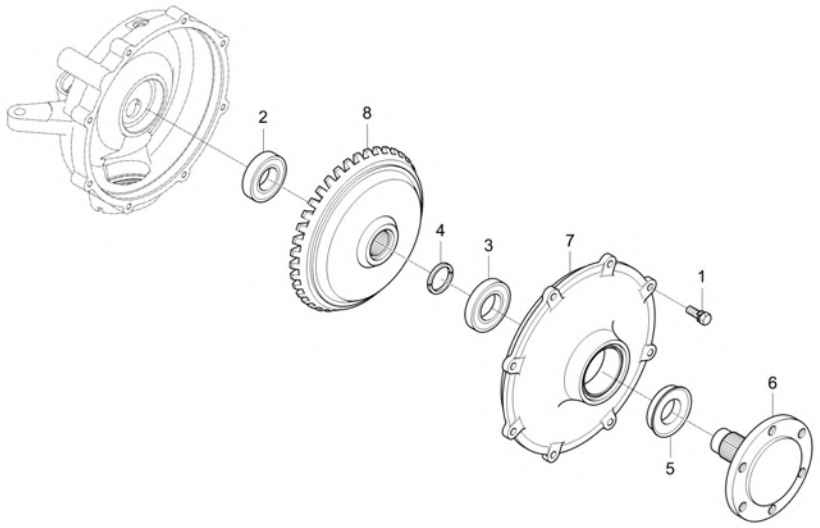

A : CK3510SEB

No.	Part Number	Description	Qty A	Qty B	Qty C	Qty D	Qty E	I.C	Remark
1	01123-50825	BOLT WITH WASHER	16						M8XP1.25
2	08101-06306	BEARING, BALL	2						#6306
3	08101-06307	BEARING, BALL	2						#6307
4	37650-4368-0	PIN	4						DIA5*55
5	76802-5691-0	SEAL,OIL	2						
6	T5815-43611	AXLE, FRONT dnr v	2						
6	T5815-43612	AXLE, FRONT	2 TJJ700001 ~ WJJ700036					<----->	
7	T5815-43621	COVER,FRONT AXLE	2						
8	T5815-43661	GEAR,42 BEVEL	2						

----> Old replace New
<---- New replace Old
<-X-> Not interchangeable
<---> Interchangeable
<-O-> Interchangeable with another part(s)
* Please place an order assy(*)

https://tractormanualz.com/

TC2-G341007

FRONT WHEEL GROUP

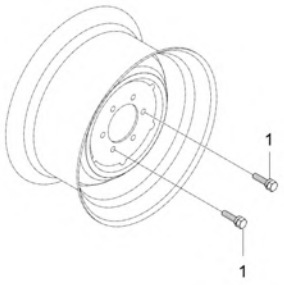

A : CK3510SEB

No.	Part Number	Description	Qty A	Qty B	Qty C	Qty D	Qty E	I.C	Remark
1	01133-51225	BOLT, WASHER v	12						M12*P1.25

----> Old replace New
<----> Interchangeable
* Please place an order assy(*)
<---- New replace Old
<-O-> Interchangeable with another part(s)
<-X-> Not interchangeable

https://tractormanualz.com/

TC2-G431015

POWER STEERING UNIT GROUP

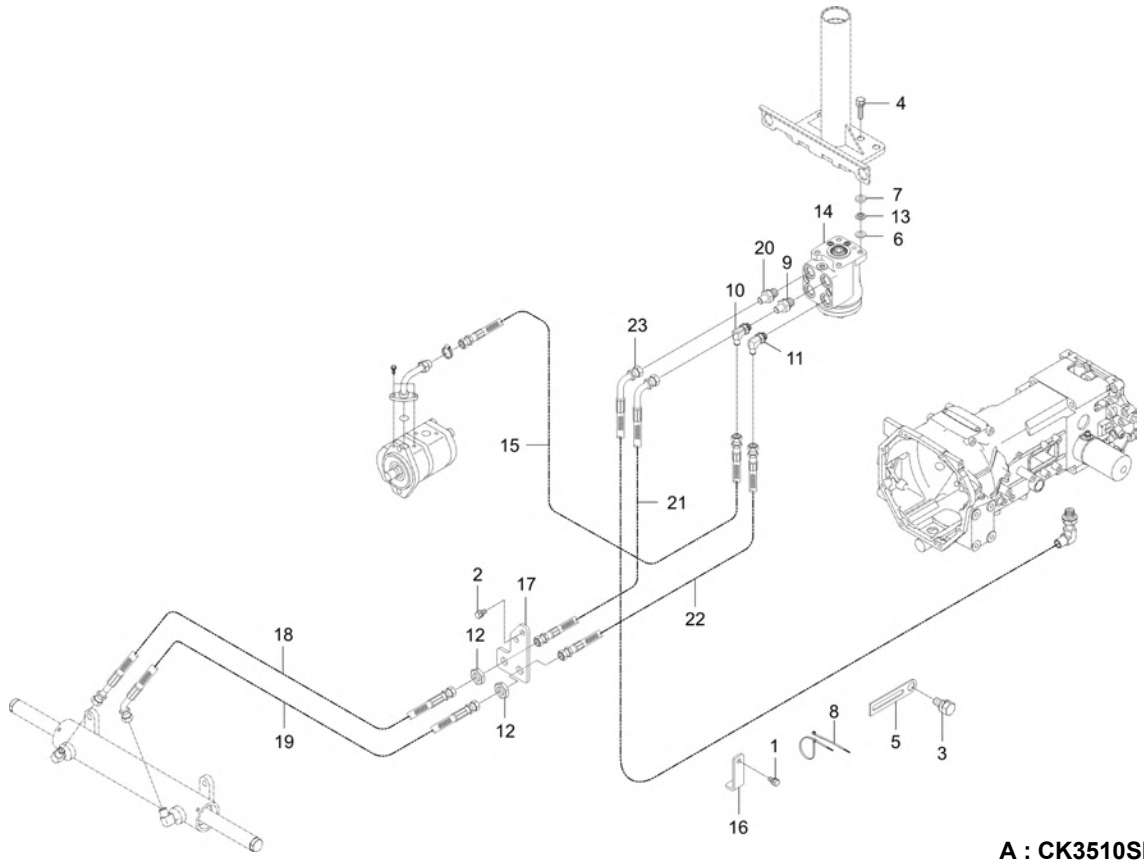

A : CK3510SEB

No.	Part Number	Description	Qty A	Qty B	Qty C	Qty D	Qty E	I.C	Remark
1	01123-50814	BOLT, WASHER	1						M8*P1.25
2	01123-50814	BOLT, WASHER	2						M8*P1.25
3	01123-51020	BOLT	1						M10*P1.5
4	01123-51030	BOLT	4						M10*1.5
5	32240-3446-1	WIR'G CLAMP	3						
6	55611-5711-1	CAP 2, BEARING	4						T1.0
7	62411-3313-1	WASHER	4						
8	T2185-82551	CABLE TIE, BLACK / 300	2						L290
9	T4850-45771	CONNECTOR	1						
10	T4930-45671	ELBOW	1						PF3/8, 3/4-16UNF
11	T4930-45681	ELBOW	1						PF1/4, 3/4-16UNF
12	T4930-47091	NUT	2						-
13	T5520-80531	BUSHING	4						
14	T5855-41501	UNIT, POWER STEERING	1						80cc/rev
15	T5855-41512	HOSE P, STEERING	1						
16	T5855-42031	HOLDER, HOSE	1						
17	TC24-0087A	BRACKET, HYD HOSE	1						
17	TC24-0087B	BRACKET, HYD HOSE	1 UJJ700229 ~ VJJ700016					<----->	

----> Old replace New
<---> Interchangeable
* Please place an order assy(*)
<---- New replace Old
<-O-> Interchangeable with another part(s)
<-X-> Not interchangeable

https://tractormanualz.com/

TC2-G431015

POWER STEERING UNIT GROUP

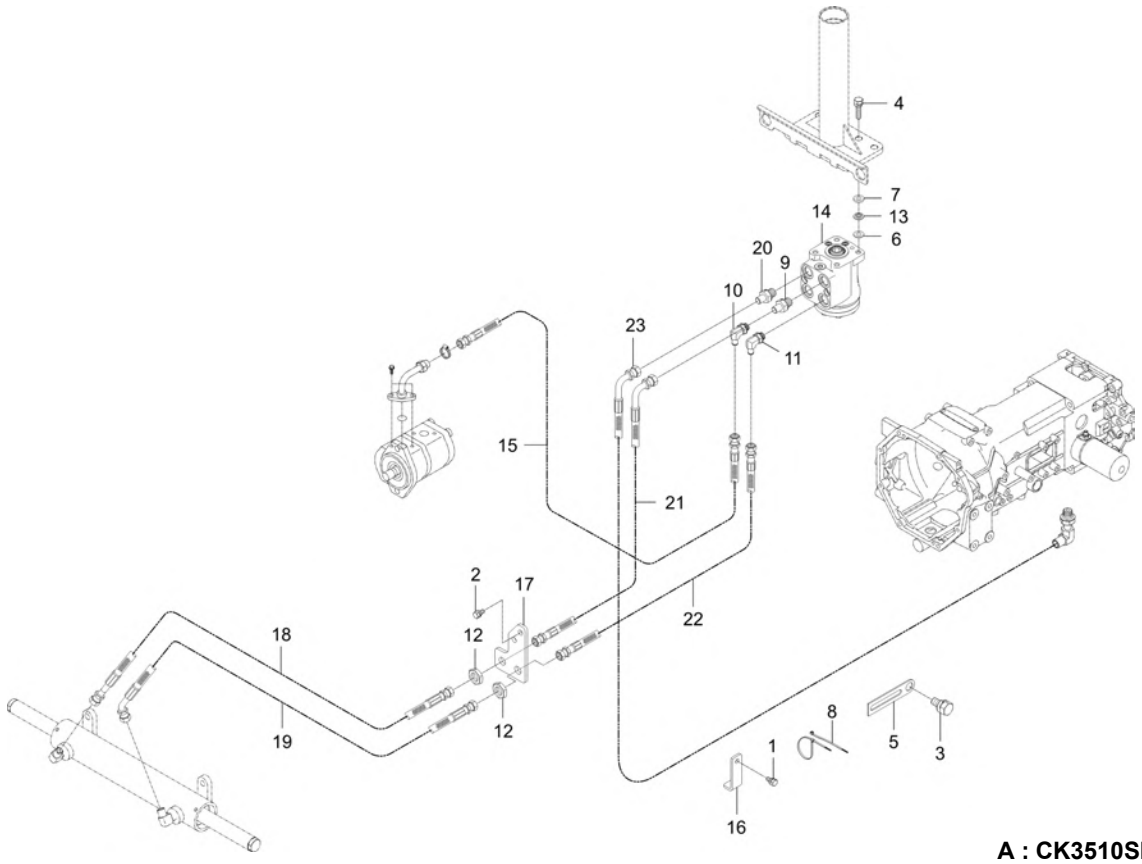

A : CK3510SEB

No.	Part Number	Description	Qty A	Qty B	Qty C	Qty D	Qty E	I.C	Remark
17	TC24-0087C	BRACKET, HYD HOSE	1 VJJ700017 ~ WJJ700036					<----->	
18	TC24-0088A	HOSE, HYD-L1	1						
19	TC24-0089A	HOSE, HYD-R1	1						
20	TC24-0147A	CONNECTOR	1						
21	TC24-0178A	HOSE, STEERING-L	1						
22	TC24-0179A	HOSE, STEERING-R	1						
23	TC24-0180A	HOSE, HYD-T(M)	1						

----> Old replace New
<----> Interchangeable
* Please place an order assy(*)
<---- New replace Old
<-O-> Interchangeable with another part(s)
<-X-> Not interchangeable

https://tractormanualz.com/

TC2-G442012 EXTERNAL HYDRAULIC VALVE GROUP(DS)

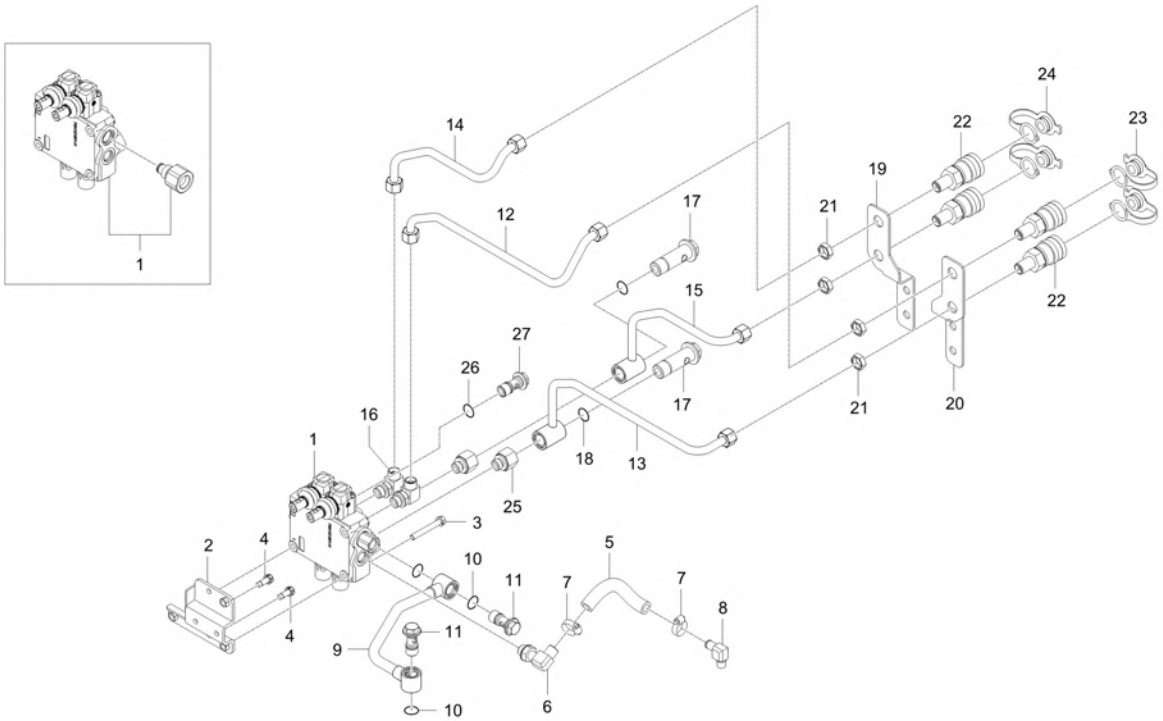

A : CK3510SEB

No.	Part Number	Description	Qty A	Qty B	Qty C	Qty D	Qty E	I.C	Remark
1	TC24-0232A	VALVE, DOUBLE ACTING - DS v	1						
2	TC24-0104C	SUPPORT, VALVE	1						
3	01123-50860	WASHER BOLT	3						M8*1.25
4	01123-50816	Hex Head Cap Screw	2						M8XP1.25
5	TC24-0106A	TUBE, EXTERNAL HYD-T	1						
6	TC24-0133A	ELBOW	1						PF3/8
7	F6800-91851	BAND, HOSE	2						12-22mm
8	T2185-66151	ELBOW	1						
9	TC24-0107A	TUBE, EXTERNAL HYD-CA	1						
10	04816-00200	O RING	4						DIA19.8
10	04817-00200	O RING	4					<----->	DIA19.8
11	T4620-37092	JOINT BOLT v	2						
11	TC24-0238A	BOLT, JOINT	2					<----->	
12	TC24-0108A	TUBE, EXTERNAL HYD-A	1						
13	TC24-0109A	TUBE, EXTERNAL HYD-B	1						
14	TC24-0110A	TUBE, EXTERNAL HYD-C	1						
15	TC24-0111A	TUBE, EXTERNAL HYD-D	1						
16	T4810-45761	ELBOW	2						

----> Old replace New <---- New replace Old <-X-> Not interchangeable
<---> Interchangeable <-O-> Interchangeable with another part(s)
* Please place an order assy(*)

https://tractormanualz.com/

TC2-G442012 EXTERNAL HYDRAULIC VALVE GROUP(DS)

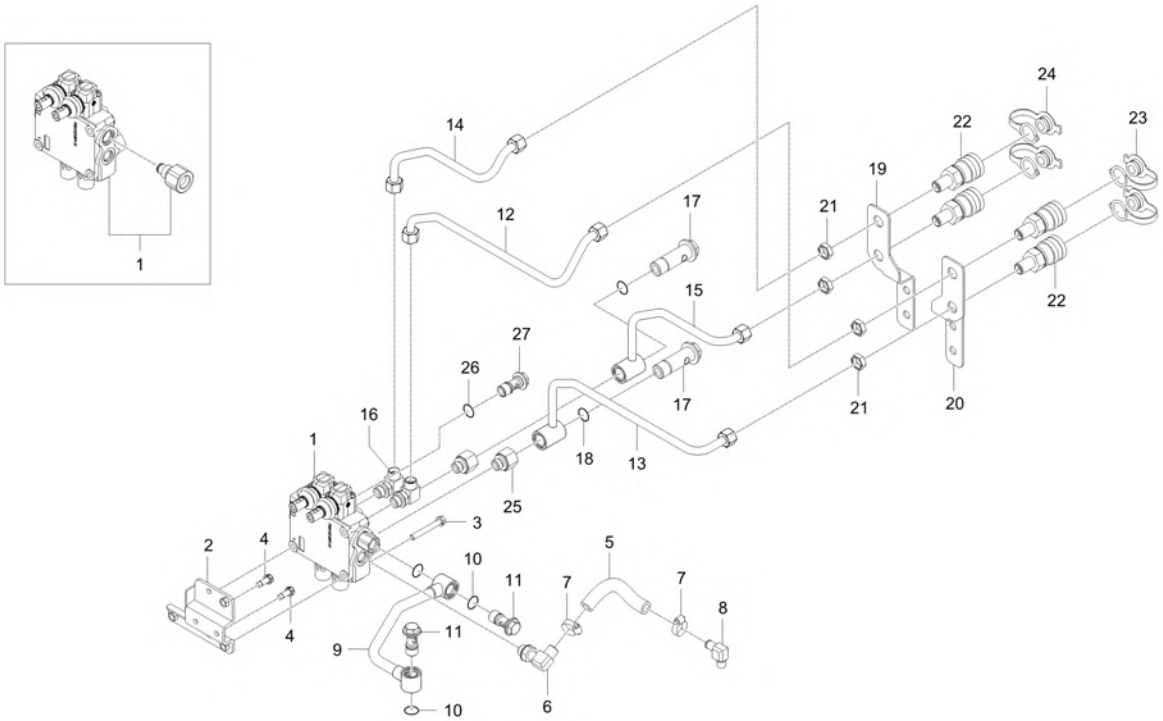

A : CK3510SEB

No.	Part Number	Description	Qty A	Qty B	Qty C	Qty D	Qty E	I.C	Remark
17	T2360-37081	BOLT,JOINT	2						
17	TC24-0239A	BOLT, JOINT	2					<----->	
18	04816-00200	O RING	4						DIA19.8
18	04817-00200	O RING	4					<----->	DIA19.8
19	T5810-48022	SUPPORT, SOCKET	1						
20	T5810-48121	SUPPORT, SOCKET	1						3.2T
21	T4930-47071	NUT	4						M18XP1.5
22	TD24-0159A	COUPLER, QUICK	4						
23	TF14-0122A	CAP, COUPLER SOCKET-1/2	2						1/2
24	TF14-0123A	CAP, COUPLER SOCKET-1/2	2						1/2
25	T5855-47091	CONNECTION	3						
26	04816-00200	O RING	2						DIA19.8
26	04817-00200	O RING	2					<----->	DIA19.8
27	T4620-37092	JOINT BOLT v	1						
27	TC24-0238A	BOLT, JOINT	1					<----->	

----> Old replace New
<---- New replace Old
<-X-> Not interchangeable
<---> Interchangeable
<-O-> Interchangeable with another part(s)
* Please place an order assy(*)

https://tractormanualz.com/

TC2-G421002

MODULATE VALVE GROUP

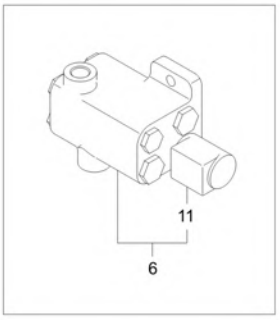

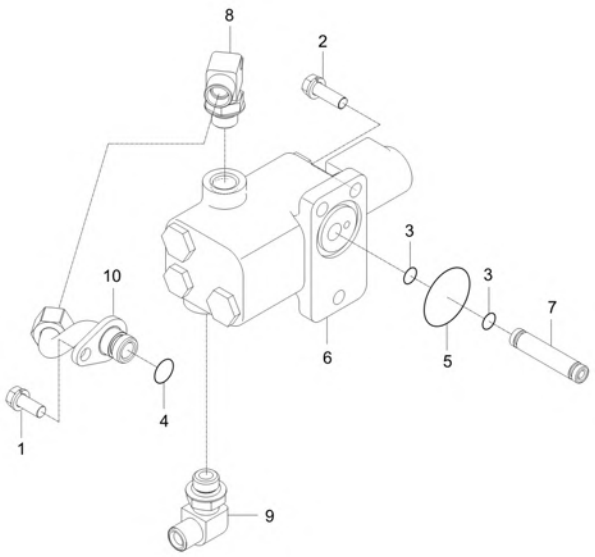

A : CK3510SEB

No.	Part Number	Description	Qty A	Qty B	Qty C	Qty D	Qty E	I.C	Remark
1	01123-50820	BOLT, WASHER v	1						M8XP1.25
2	01123-50825	BOLT WITH WASHER	3						M8XP1.25
3	04811-00090	O RING	2						
4	04811-00140	O RING	1						
5	04811-50350	O RING	1						
6	T4180-34041	ASS'Y, MOD. VALVE	1						
7	T4810-45713	TUBE, CONNECTING	1						
8	T4810-45761	ELBOW	1						
9	T4850-45161	ELBOW	1						
10	TC24-0167B	TUBE, PTO HYD-(M)	1						
11	M301260	SOLENOID COIL (PTO)	1						

----> Old replace New
<---- New replace Old
<-X-> Not interchangeable
<---> Interchangeable
<-O-> Interchangeable with another part(s)
* Please place an order assy(*)

https://tractormanualz.com/

TC2-G464505

TOP LINK DEVICE GROUP

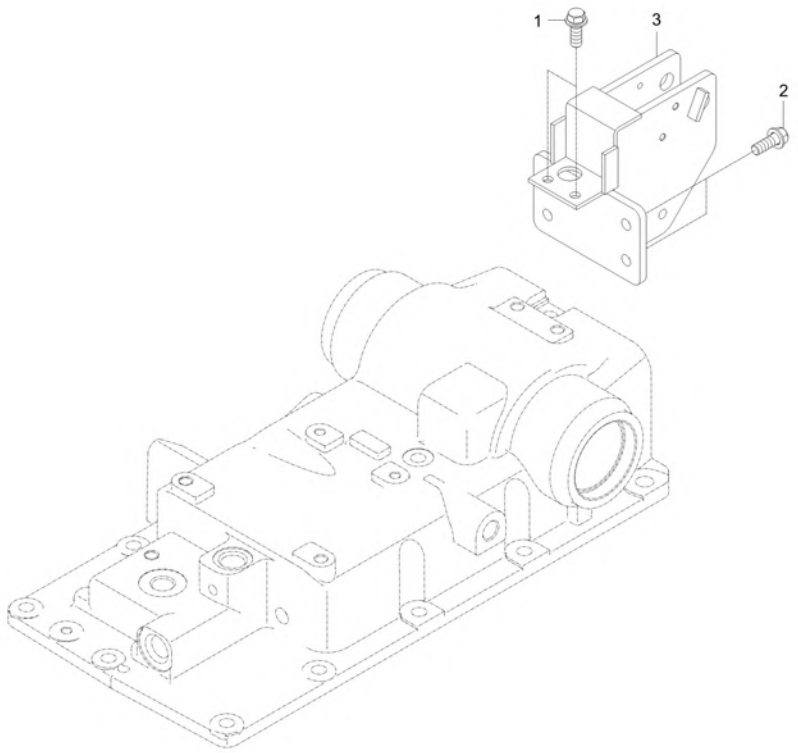

A : CK3510SEB

No.	Part Number	Description	Qty A	Qty B	Qty C	Qty D	Qty E	I.C	Remark
1	01133-51016	BOLT	2						M10*P1.25
2	01133-51025	BOLT	4						M10XP1.25
3	T5855-65014	BRACKET	1						-

----> Old replace New
<----> Interchangeable
* Please place an order assy(*)
<---- New replace Old
<-O-> Interchangeable with another part(s)
<-X-> Not interchangeable

https://tractormanualz.com/

TC2-G411004

SUCTION LINE GROUP

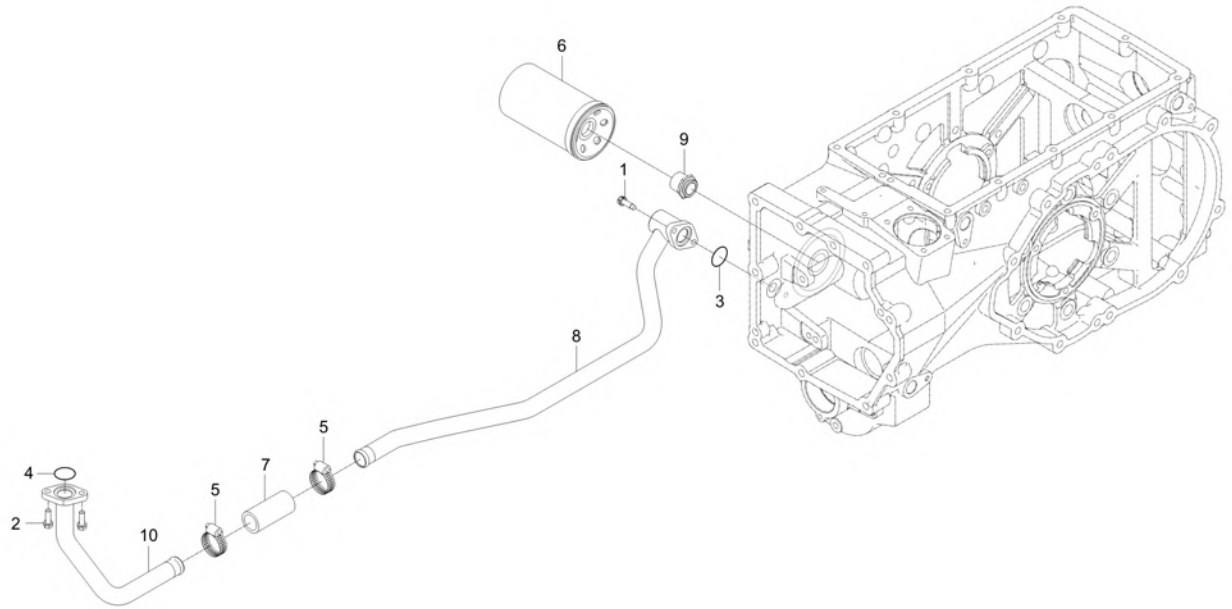

A : CK3510SEB

No.	Part Number	Description	Qty A	Qty B	Qty C	Qty D	Qty E	I.C	Remark
1	01123-50820	BOLT, WASHER v	2						M8XP1.25
2	01123-50825	BOLT WITH WASHER	2						M8XP1.25
3	04810-00280	O RING	1						
4	04810-00280	O RING	1						
5	F6800-91841	BAND, HOSE	2						25-40mm
6	T4260-38125	OIL PRESSURE FILTER v	1						
7	T4125-38151	HOSE,RUBBER	1						
8	T5855-46003	TUBE, INLET	1						
9	T5855-46502	CONNECTION	1						
10	TC24-0007A	PIPE, SUCTION-T4	1						D27.2XT1.5

----> Old replace New <---- New replace Old <-X-> Not interchangeable
<---> Interchangeable <-O-> Interchangeable with another part(s)
* Please place an order assy(*)

https://tractormanualz.com/

TC2-G412002

GEAR PUMP GROUP

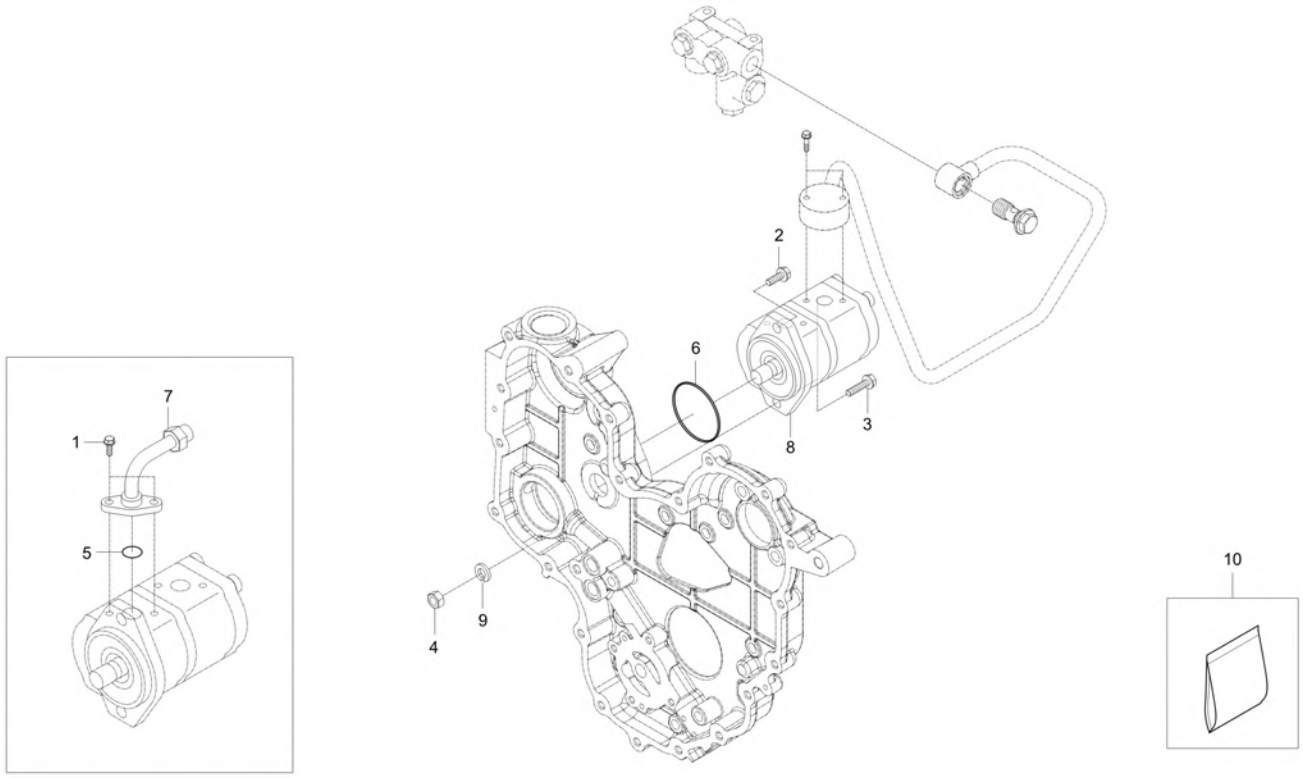

A : CK3510SEB

No.	Part Number	Description	Qty A	Qty B	Qty C	Qty D	Qty E	I.C	Remark
1	01123-50825	BOLT WITH WASHER	2						M8XP1.25
2	01133-51035	WASHER BOLT	1						M10XP1.25
3	01133-51045	BOLT	1						
4	02176-50100	NUT v	1						M10XP1.25
5	04810-00180	O RING	1						
5	04817-00180	O_RING	1					<----->	DIA17.8
6	04811-10800	O-RING	1						DIA79.5
7	TC24-0045A	TUBE, HYD-P(TIER4)	1						
8	TC24-0019A	PUMP, GEAR	1						6.5X10
9	04512-50100	SPRING WASHER	1						M10
10	TC24-0019A-KA	GEAR PUMP SEAL KIT	1						1.0X1219X2 438

----> Old replace New
<----> Interchangeable
* Please place an order assy(*)
<---- New replace Old
<-O-> Interchangeable with another part(s)
<-X-> Not interchangeable

https://tractormanualz.com/

TC2-G441008

JOYSTICK VALVE GROUP

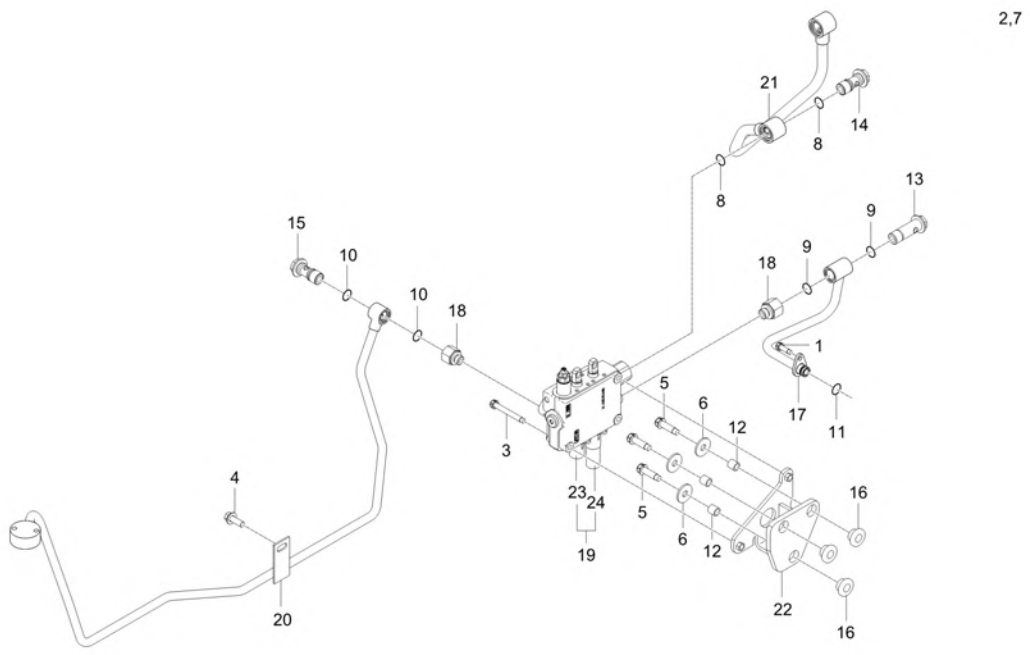

A : CK3510SEB

No.	Part Number	Description	Qty A	Qty B	Qty C	Qty D	Qty E	I.C	Remark
1	01123-50820	BOLT, WASHER v	1						M8XP1.25
2	01123-50840	BOLT	2						M8*P1.25-40
3	01123-50865	BOLT, WASHER	3						
4	01133-51035	WASHER BOLT	3						M10X1.25
5	01135-51020	BOLT, WASHER	1						M10*1.25
6	04015-50100	WASHER, PLAIN	3						M10
7	04816-00200	O RING	2						DIA19.8
7	04817-00200	O RING	2					<----->	DIA19.8
8	04816-00200	O RING	4						DIA19.8
8	04817-00200	O RING	4					<----->	DIA19.8
9	04816-00200	O RING	1						DIA19.8
9	04817-00200	O RING	1					<----->	DIA19.8
10	04816-00200	O RING	2						DIA19.8
10	04817-00200	O RING	2					<----->	DIA19.8
11	04816-00140	O-RING	1						DIA13.8
12	T2185-97171	COLLAR	3						DIA14
13	T2360-37081	BOLT,JOINT	1						
13	TC24-0239A	BOLT, JOINT	1					<----->	

----> Old replace New
<---- New replace Old
<-X-> Not interchangeable
<---> Interchangeable
<-O-> Interchangeable with another part(s)
* Please place an order assy(*)

https://tractormanualz.com/

TC2-G441008

JOYSTICK VALVE GROUP

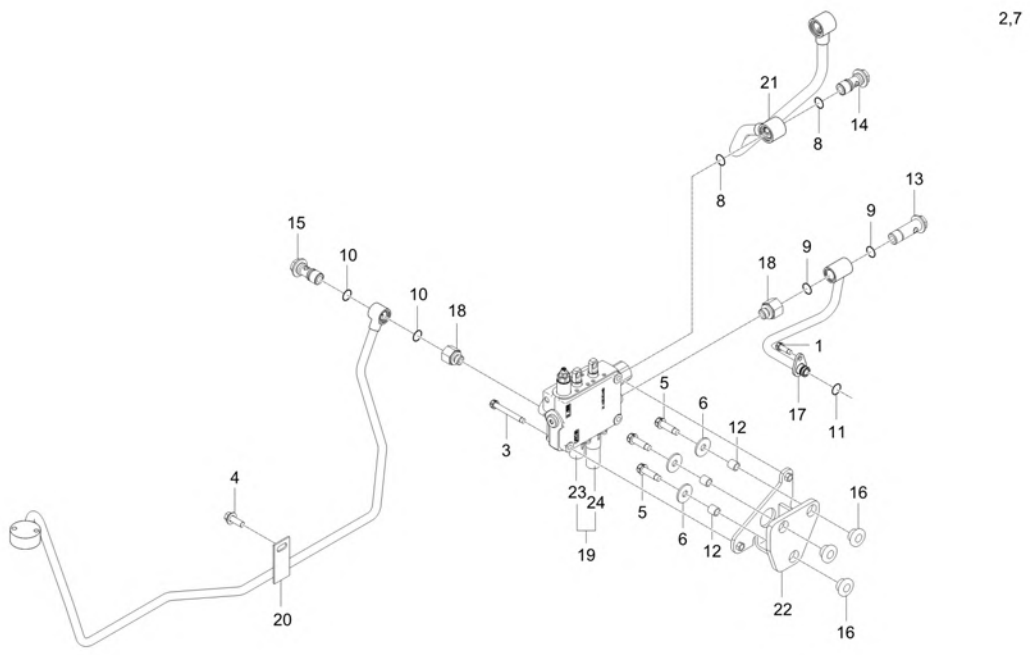

A : CK3510SEB

No.	Part Number	Description	Qty A	Qty B	Qty C	Qty D	Qty E	I.C	Remark
14	T4620-37092	JOINT BOLT v	2						
14	TC24-0238A	BOLT, JOINT	1					<----->	
15	T4620-37092	JOINT BOLT v	1						
15	TC24-0238A	BOLT, JOINT	1					<----->	
16	T4620-60151	GROMMET	3						
17	T5855-47042	TUBE, HYDRAULIC	1						
18	T5855-47091	CONNECTION	2						
19	TC24-0038A	VALVE, JOYSTICK dnr	1 TJJ700001 ~ UJJ700116						
19	TC24-0138A	VALVE, JOYSTICK v	1 SJJ700001 ~ UJJ700224					<----->	
20	TC24-0098A	TUBE, HYD-J1(T4) dnr v	1						
20	TC24-0098B	TUBE, HYD-J1 T4 v	1 TJJ700001 ~ WJJ700036					<--O-->	
21	TC24-0113A	TUBE, EXTERNAL HYD-JP	1						
22	TC24-0148A	STAY, JOYSTICK VALVE	1						
23	36001-0098	END CAP 3	1						
24	46001-0430	CAP END ASSY	1						

----> Old replace New
<---- New replace Old
<-X-> Not interchangeable
<---> Interchangeable
<-O-> Interchangeable with another part(s)
* Please place an order assy(*)

https://tractormanualz.com/

TC2-G442006 EXTERNAL HYDRAULIC VALVE GROUP(DS)

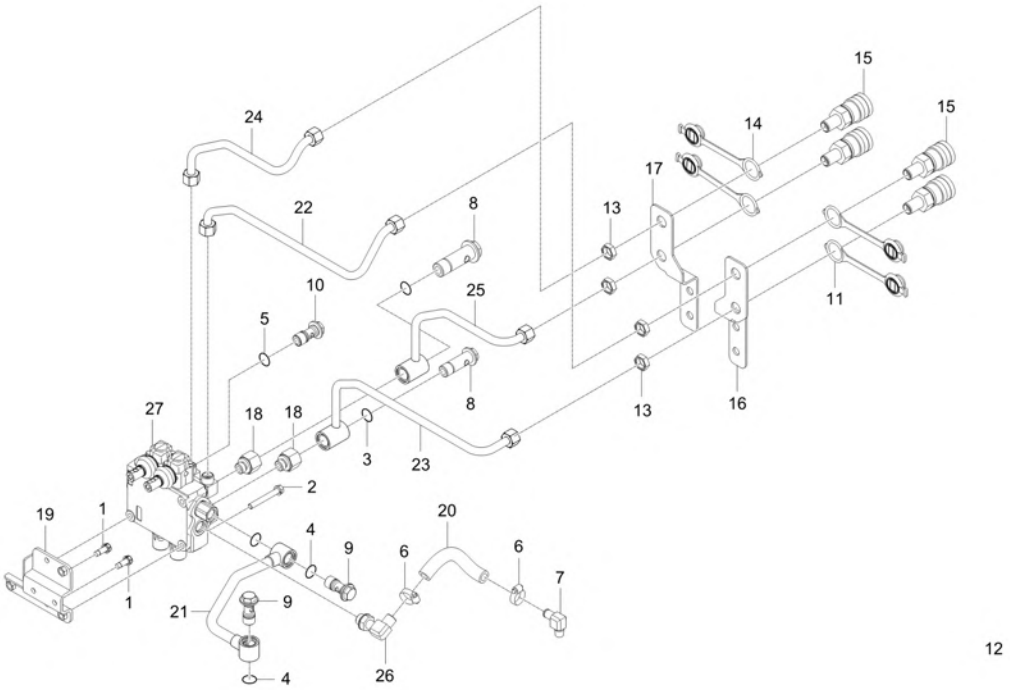

A : CK3510SEB

No.	Part Number	Description	Qty A	Qty B	Qty C	Qty D	Qty E	I.C	Remark
1	01123-50816	Hex Head Cap Screw	2						M8XP1.25
2	01123-50860	WASHER BOLT	3						M8*1.25
3	04816-00200	O RING	4						DIA19.8
3	04817-00200	O RING	4					<----->	DIA19.8
4	04816-00200	O RING	4						DIA19.8
4	04817-00200	O RING	4					<----->	DIA19.8
5	04816-00200	O RING	2						DIA19.8
6	F6800-91851	BAND, HOSE	2						12-22mm
7	T2185-66151	ELBOW	1						
8	T2360-37081	BOLT,JOINT	2						
8	TC24-0239A	BOLT, JOINT	2					<----->	
9	T4620-37092	JOINT BOLT v	2						
9	TC24-0238A	BOLT, JOINT	2					<----->	
10	T4620-37092	JOINT BOLT v	1						
10	TC24-0238A	BOLT, JOINT	1					<----->	
11	T4720-90081	DUST-CAP	2 ~ VJJ700008						
11	TF14-0122A	CAP, COUPLER SOCKET-1/2	2 VJJ700009 ~ WJJ700036					<----->	1/2
12	T4810-45761	ELBOW	2						

----> Old replace New
<---- New replace Old
<-X-> Not interchangeable
<---> Interchangeable
<-O-> Interchangeable with another part(s)
* Please place an order assy(*)

https://tractormanualz.com/

TC2-G442006 EXTERNAL HYDRAULIC VALVE GROUP(DS)

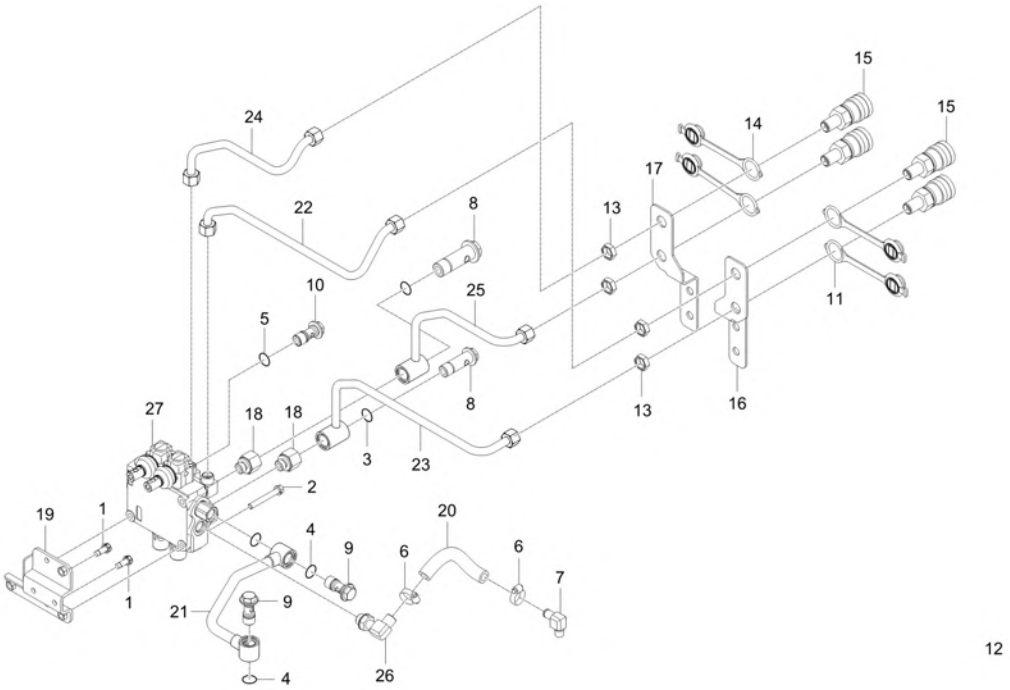

A : CK3510SEB

No.	Part Number	Description	Qty A	Qty B	Qty C	Qty D	Qty E	I.C	Remark
13	T4930-47071	NUT	4						M18XP1.5
14	T5520-90071	CAP, SOCKET	2 ~ VJJ700008						1/2
14	TF14-0123A	CAP, COUPLER SOCKET-1/2	2 VJJ700009 ~ WJJ700036					<----->	1/2
15	T5710-30091	COUPLER,SELF-SEALING,AC,1-1-4 v	4						
15	TD24-0159A	COUPLER, QUICK	4					<----->	
16	T5810-48022	SUPPORT, SOCKET	1						
17	T5810-48121	SUPPORT, SOCKET	1						3.2T
18	T5855-47091	CONNECTION	3						
19	TC24-0104B	SUPPORT, VALVE	1						
19	TC24-0104C	SUPPORT, VALVE	1					<----->	
20	TC24-0106A	TUBE, EXTERNAL HYD-T	1						
21	TC24-0107A	TUBE, EXTERNAL HYD-CA	1						
22	TC24-0108A	TUBE, EXTERNAL HYD-A	1						
23	TC24-0109A	TUBE, EXTERNAL HYD-B	1						
24	TC24-0110A	TUBE, EXTERNAL HYD-C	1						
25	TC24-0111A	TUBE, EXTERNAL HYD-D	1						
26	TC24-0133A	ELBOW	1						PF3/8
27	TC24-0146A	VALVE, DOUBLE ACTING - DS	1						

----> Old replace New <---- New replace Old <-X-> Not interchangeable
<---> Interchangeable <-O-> Interchangeable with another part(s)
* Please place an order assy(*)

https://tractormanualz.com/

TC2-G442006 EXTERNAL HYDRAULIC VALVE GROUP(DS)

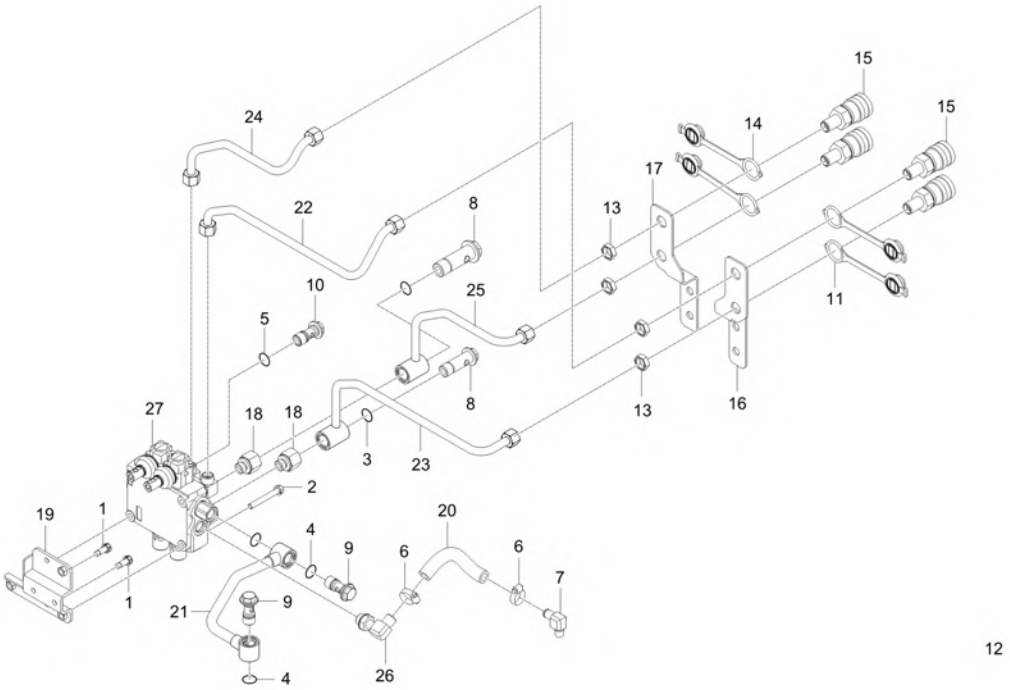

A : CK3510SEB

No.	Part Number	Description	Qty A	Qty B	Qty C	Qty D	Qty E	I.C	Remark
27	TC24-0232A	VALVE, DOUBLE ACTING - DS v	1					<----->	

----> Old replace New
<---> Interchangeable
* Please place an order assy(*)
<---- New replace Old
<-O-> Interchangeable with another part(s)
<-X-> Not interchangeable

https://tractormanualz.com/

TC2-G446014 EXTERNAL HYDRAULIC VALVE GROUP(OPT-US)

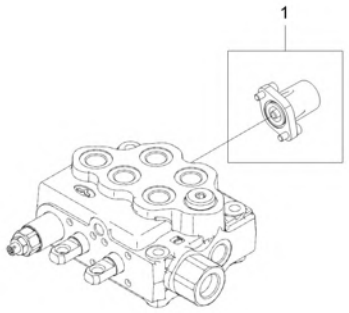

A : CK3510SEB

No.	Part Number	Description	Qty A	Qty B	Qty C	Qty D	Qty E	I.C	Remark
1	TC24-A0010B	HOLDER, DETENT	1						

----> Old replace New
<----> Interchangeable
* Please place an order assy(*)
<---- New replace Old
<-O-> Interchangeable with another part(s)
<-X-> Not interchangeable

https://tractormanualz.com/

TC2-G461001 LIFT CONTROL VALVE(MEC) GROUP

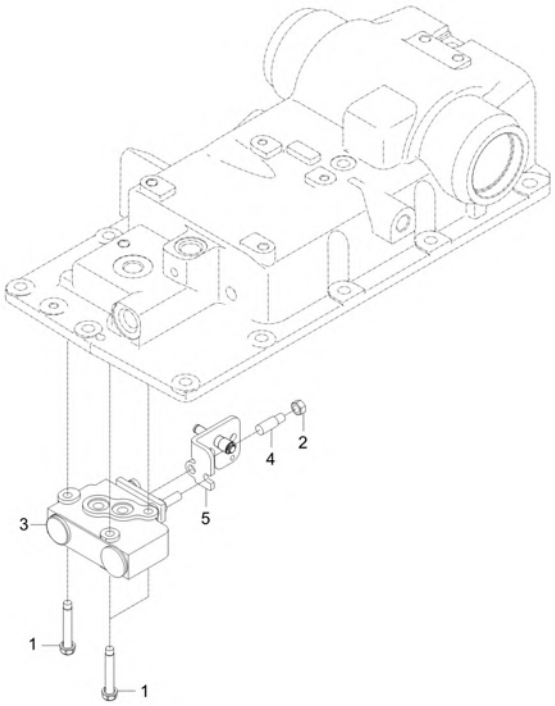

A : CK3510SEB

No.	Part Number	Description	Qty A	Qty B	Qty C	Qty D	Qty E	I.C	Remark
1	01123-50845	BOLT, WASHER v	3						M8*P1.25
2	02156-50080	NUT v	1						M8XP1.25
3	T5710-37302	VALVE v	1						
4	T5710-37571	PIN	1						
5	T5715-37562	PUSH PLATE ASSY B	1						

----> Old replace New <---- New replace Old <-X-> Not interchangeable
<---> Interchangeable <-O-> Interchangeable with another part(s)
* Please place an order assy(*)

https://tractormanualz.com/

TC2-G463011

HYDRAULIC CYLINDER GROUP

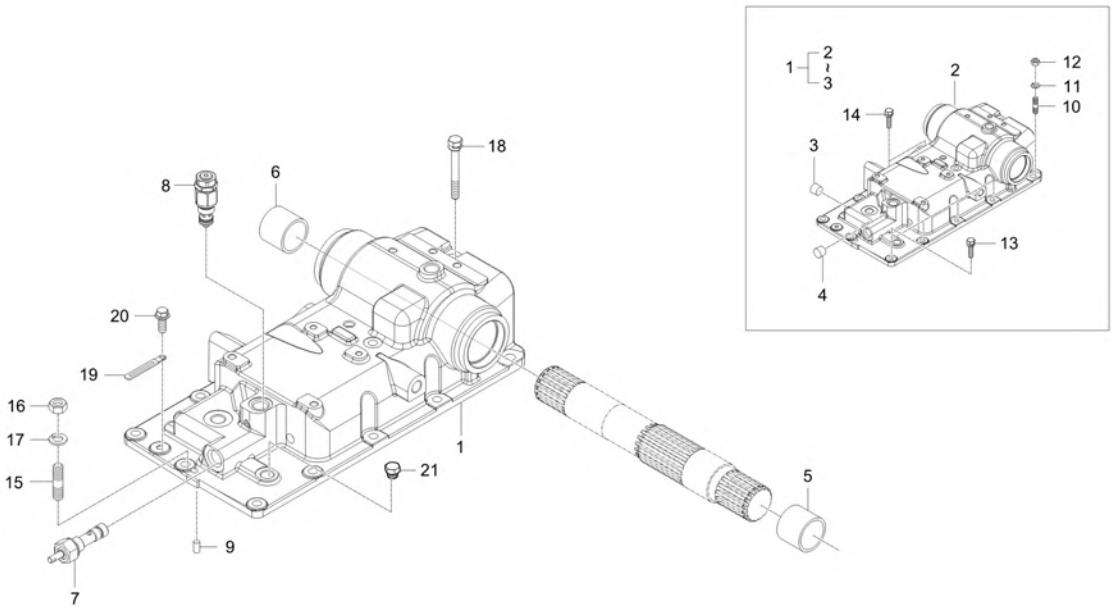

A : CK3510SEB

No.	Part Number	Description	Qty A	Qty B	Qty C	Qty D	Qty E	I.C	Remark
1	TC24-0195B	BODY, HYD CYL v	1						
1	TC24-0195C	BODY, HYD CYL	1					<--O-->	
2	TC24-0196B	BODY, HYD CYL v	1						
3	15521-9603-3	PLUG	1						DIA12*12,PT 1/4
4	15521-9602-2	PLUG	1						-
5	08511-05050	BUSH	1						
6	08511-04550	BUSH	1						
7	T5710-37441	FLOWCONTROL VALVE	1						
8	T5210-37311	ASSY, RELIEF VALVE	1						
9	05012-00818	PIN, PARALLEL	1						
10	01517-51030	STUD	1						
11	04512-50120	SPRING WASHER	1						M12
12	02176-50120	NUT	1						M12XP1.25
13	01133-51025	BOLT	6						M10XP1.25
14	01133-51230	WASHER BOLT	2						M12*P1.25
15	01574-51230	STUD	1						
16	02176-50120	NUT	1						M12XP1.25
17	04512-50120	SPRING WASHER	1						M12

----> Old replace New
<---- New replace Old
<-X-> Not interchangeable
<---> Interchangeable
<-O-> Interchangeable with another part(s)
* Please place an order assy(*)

https://tractormanualz.com/

TC2-G463011

HYDRAULIC CYLINDER GROUP

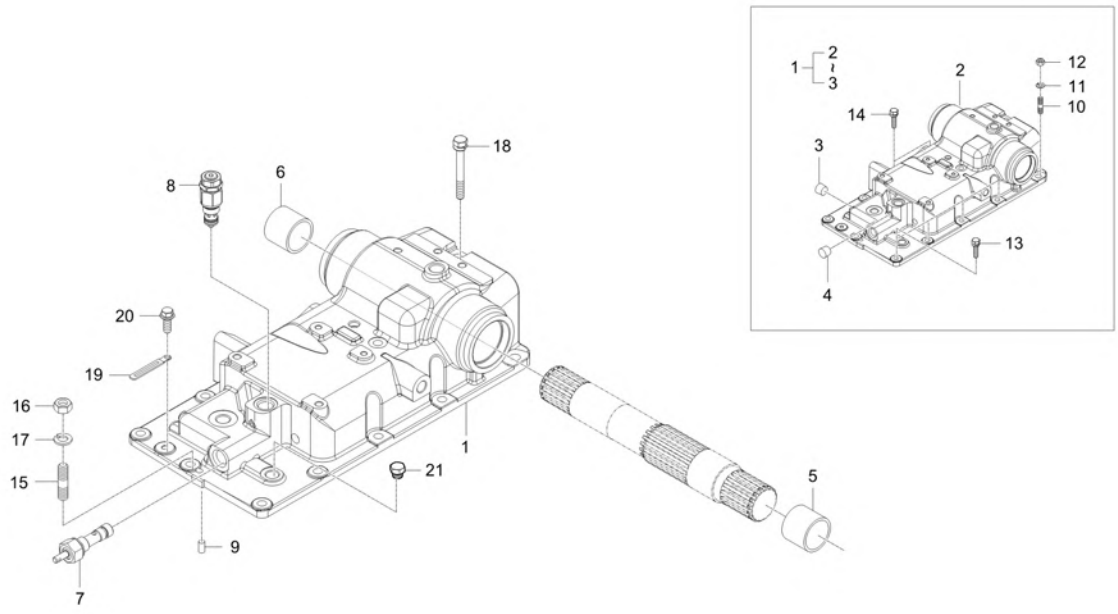

A : CK3510SEB

No.	Part Number	Description	Qty A	Qty B	Qty C	Qty D	Qty E	I.C	Remark
18	01133-51003	OB-BOLT	1						
19	37150-3447-1	WIR'G CLAMP	1						T0.5
20	01123-50812	BOLT	1						M8P1.25
21	TG14-0137A	PLUG	1						

----> Old replace New
<---- New replace Old
<-X-> Not interchangeable
<---> Interchangeable
<-O-> Interchangeable with another part(s)
* Please place an order assy(*)

https://tractormanualz.com/

TC2-G463503

LIFT CYLINDER GROUP

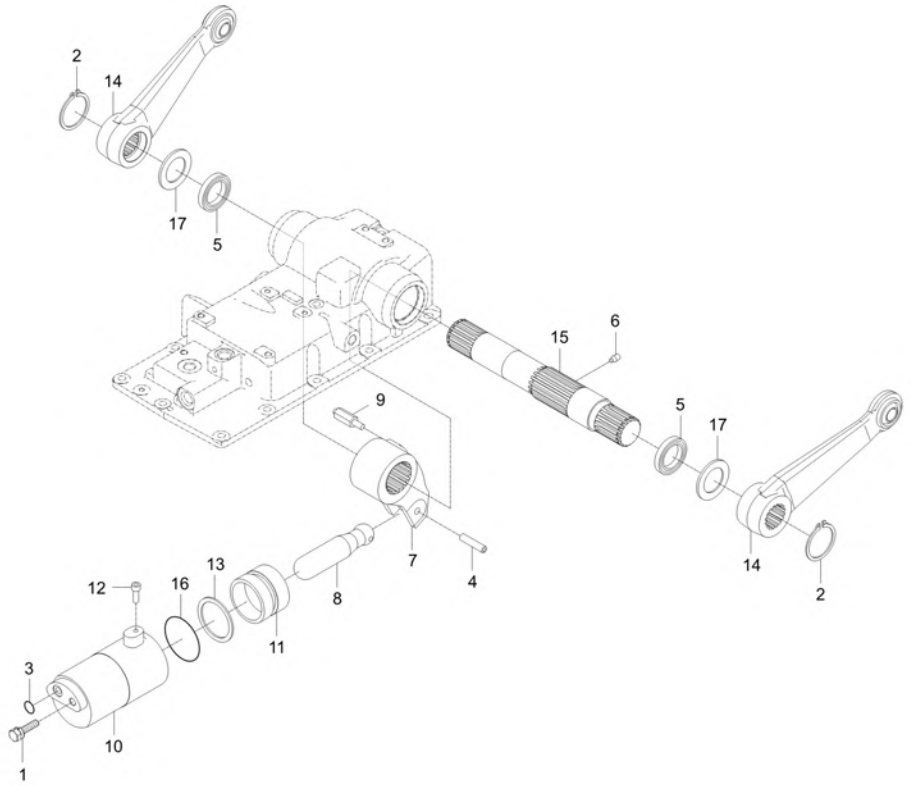

A : CK3510SEB

No.	Part Number	Description	Qty A	Qty B	Qty C	Qty D	Qty E	I.C	Remark
1	01133-51222	WITH_WASHER_BOLT	1						M12XP1.25
2	04612-00450	RING,SNAP	2						
3	04810-00140	O RING	1						P14
4	05411-00855	PIN, SPRING	1						8*55
5	09500-45609	SEAL,OIL	2						
6	T2610-37453	SCREW, SET	1						M10*P1.5
7	T5710-37231	CRANK	1						
8	T5710-37241	CONNECTING ROD	1						
9	T5855-43031	PIN	1						
10	T5855-43042	CYLINDER	1						
11	T5855-43051	PISTON,HYDRAULIC	1						
12	T5855-43061	BOLT, HEXAGON SOCKET	1						
13	T5855-43072	BACK UP RING v	1						
14	T5855-43082	ASSY, LIFT ARM	2						
15	TC24-0164A	ARM SHAFT	1						
16	TC24-0197A	O RING	1						Φ60
17	TD24-0008A	WASHER	2						

----> Old replace New <---- New replace Old <-X-> Not interchangeable
<---> Interchangeable <-O-> Interchangeable with another part(s)
* Please place an order assy(*)

https://tractormanualz.com/

TC2-G464002

DOWN SPEED CONTROL GROUP

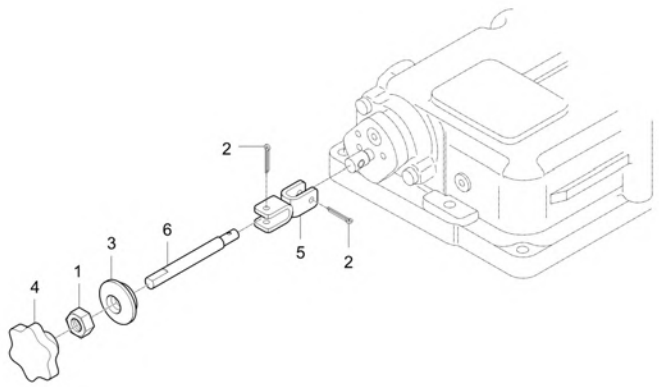

A : CK3510SEB

No.	Part Number	Description	Qty A	Qty B	Qty C	Qty D	Qty E	I.C	Remark
1	02056-50060	NUT	1						M6*P1.0
2	05511-50320	PIN, SPLIT	2						M3.2*20
3	31355-2949-1	GROMMET	1						
4	82KC-0807	KNOB	1						
5	T4628-66211	U BRACKET	1						T3.0
6	TC26-0393B	ROD, MLS	1						DIA12

----> Old replace New
<---- New replace Old
<-X-> Not interchangeable
<---> Interchangeable
<-O-> Interchangeable with another part(s)
* Please place an order assy(*)

https://tractormanualz.com/

TC2-G465501

HYDRAULIC SYSTEM GROUP(1)

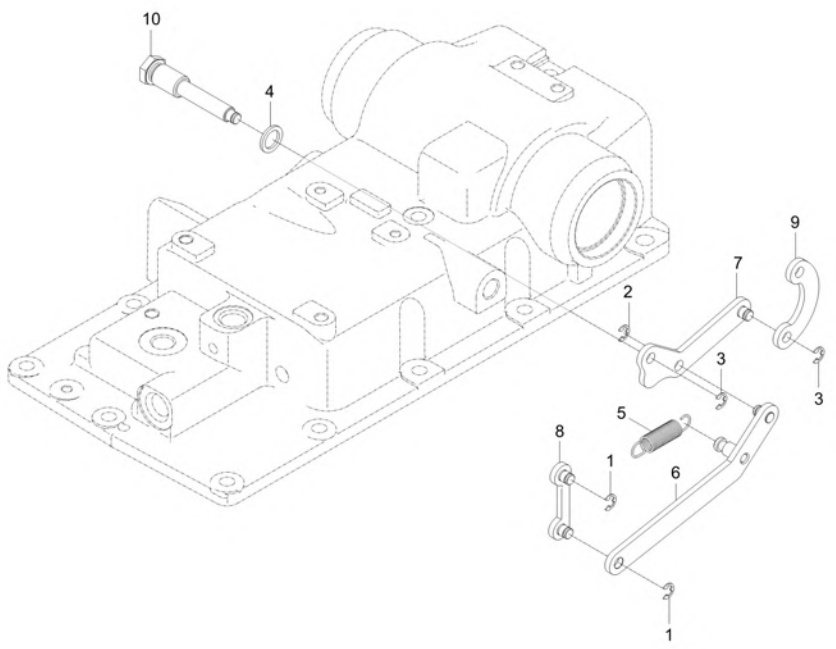

A : CK3510SEB

No.	Part Number	Description	Qty A	Qty B	Qty C	Qty D	Qty E	I.C	Remark
1	04613-50060	RING SNAP	2						
2	04613-50060	RING SNAP	1						
3	04613-50060	RING SNAP	2						
4	04724-00140	PACKING	1						
5	T2305-26641	SPRING, DIFF.LOCK PEDAL	1						DIA1.2
6	T5710-32101	LINK	1						
7	T5710-32511	LINK	1						
8	T5710-32601	LINK	1						
9	T5710-37961	FEED BACK LINK	1						T4.5
10	T5855-43502	SHAFT,SET	1						

----> Old replace New <---- New replace Old <-X-> Not interchangeable
<---> Interchangeable <-O-> Interchangeable with another part(s)
* Please place an order assy(*)

https://tractormanualz.com/

TC2-G466004

HYDRAULIC SYSTEM GROUP

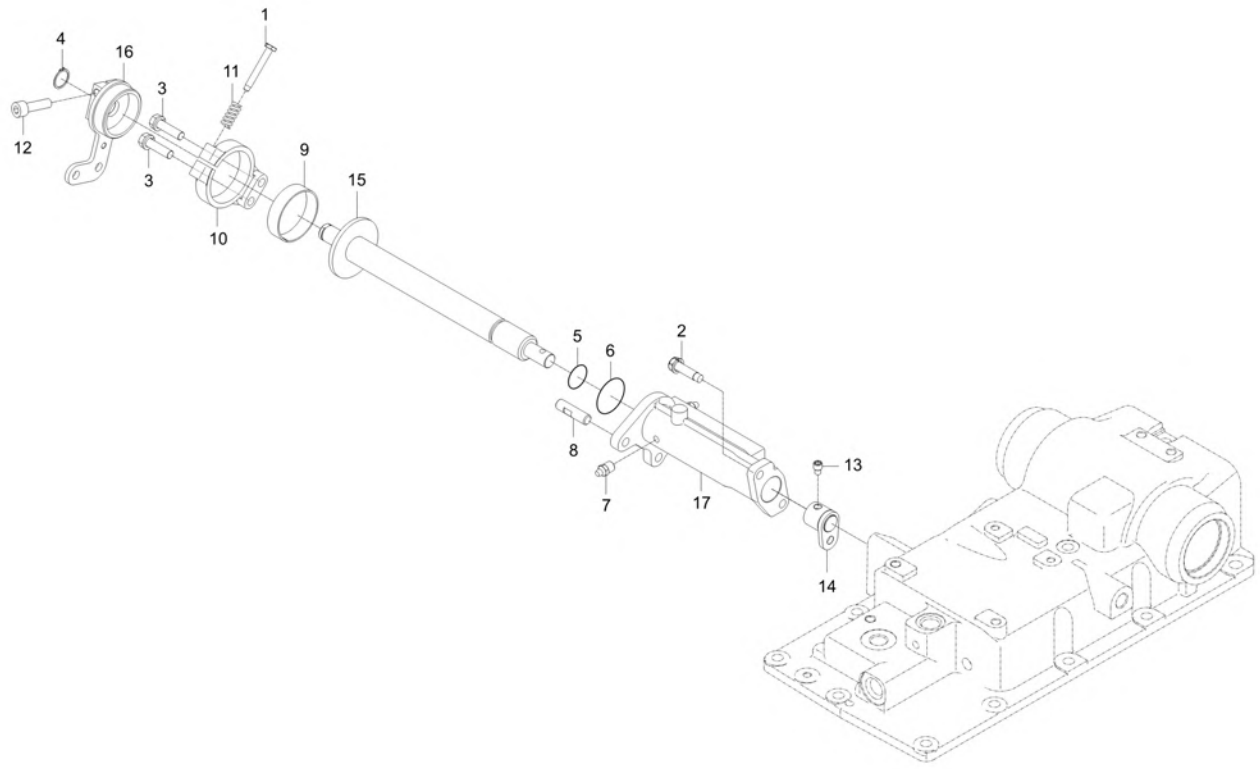

A : CK3510SEB

No.	Part Number	Description	Qty A	Qty B	Qty C	Qty D	Qty E	I.C	Remark
1	01053-50645	BOLT v	1						
2	01123-50825	BOLT WITH WASHER	2						M8XP1.25
3	01123-50830	BOLT, WASHER v	2						M8P1.25*30
4	04612-00160	SNAP RING v	1						
5	04811-00210	O RING	1						
6	04811-00250	O RING	1						
7	06613-30010	Nipple Grease Fitting, PT1/8 v	1						
8	T2165-39281	STOPPER	2						
9	T2610-39202	CLUTCH	1						
10	T2610-39212	HUB 1, CLUTCH	1						
11	T2610-39233	SPRING	1						DIA2.3
12	T2610-39252	BOLT	1						M8*1.25
13	T2610-39572	SCREW, SET	1						M8*P1.25
14	T5710-39701	POSITION CONTROL LEVER ARM	1						
15	T5855-44012	SHAFT	1						
16	TC24-0090A	LEVER, CONTROL POSITION	1						
17	TC24-0091A	SUPPORT, HYD LEVER	1						

----> Old replace New
<---- New replace Old
<-X-> Not interchangeable
<---> Interchangeable
<-O-> Interchangeable with another part(s)
* Please place an order assy(*)

https://tractormanualz.com/

TC2-G466501

AIR BREATHER GROUP

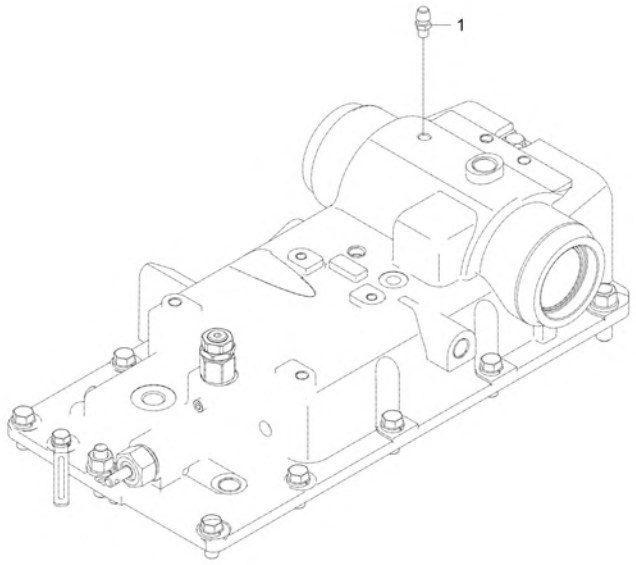

A : CK3510SEB

No.	Part Number	Description	Qty A	Qty B	Qty C	Qty D	Qty E	I.C	Remark
1	TC24-0043A	AIR BREATHER	1						

----> Old replace New
<----> Interchangeable
* Please place an order assy(*)
<---- New replace Old
<-O-> Interchangeable with another part(s)
<-X-> Not interchangeable

https://tractormanualz.com/

TC2-G511003

ENGINE ELECTRICAL GROUP(1)

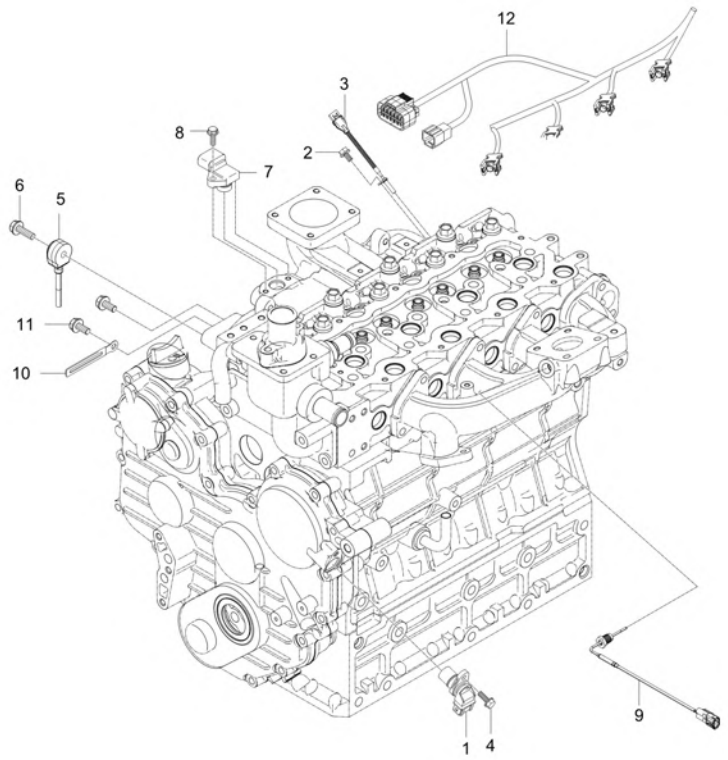

A : CK3510SEB

No.	Part Number	Description	Qty A	Qty B	Qty C	Qty D	Qty E	I.C	Remark
1	F6800-26201	SENSOR, CAMSHAFT WHEEL v	1						
2	01754-50616	BOLT, FLANGE v	1						M6XP1.0
2	01754-50610	BOLT, FLANGE	1					<------	M6XP1.0
3	F6800-26303	SENSOR, CRANKSHAFT WHEEL dnr v	1						
3	EH29-0002A	ASSY SENSOR, CRANKSHAFT WHEEL v	1					<------	
4	01754-50616	BOLT, FLANGE v	1						M6XP1.0
5	F6800-26401	SENSOR, KNOCK	1						
6	01754-50830	BOLT FLANGE	1						M8XP1.25
7	EH19-0003A	ASSY SENSOR, TMAP	1						
8	01754-50616	BOLT, FLANGE v	1						M6XP1.0
9	F5800-26501	EXHAUST GAS TEMPERATURE SENSOR	1						
9	F5800-26502	EXHAUST GAS TEMPERATURE SENSOR	1					<----->	
10	37150-3447-1	WIR'G CLAMP	2						T0.5
10	37150-3447-1	WIR'G CLAMP	1					<------	T0.5
11	01754-50812	BOLT, FLANGE	2						M8XP1.25
12	TE15-0112A	ASSY WIRE HARENESS INJECTOR	1						

----> Old replace New
<---- New replace Old
<-X-> Not interchangeable
<---> Interchangeable
<-O-> Interchangeable with another part(s)
* Please place an order assy(*)

https://tractormanualz.com/

TC2-G511502

ENGINE ELECTRICAL GROUP(2)

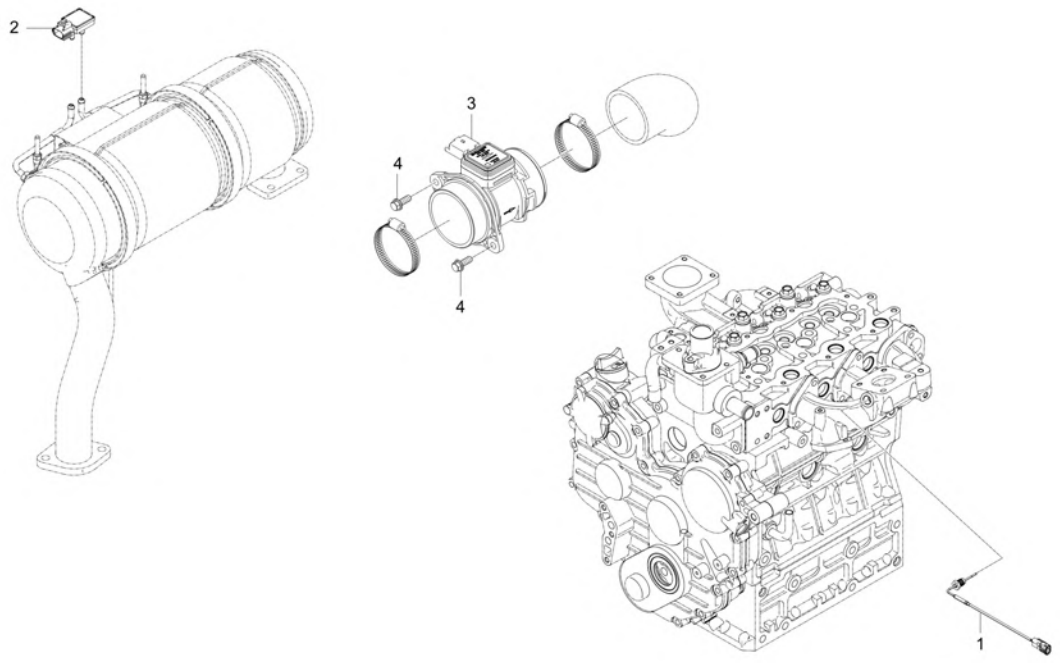

A : CK3510SEB

No.	Part Number	Description	Qty A	Qty B	Qty C	Qty D	Qty E	I.C	Remark
1	F5800-26501	EXHAUST GAS TEMPERATURE SENSOR	1						
1	F5800-26502	EXHAUST GAS TEMPERATURE SENSOR	1					<----->	
2	EF17-0007A	SENSOR, DPF DIFF PRESS	1						
3	F5800-26801	SENSOR, AIR MASS FLOW	1						N
4	01754-50610	BOLT, FLANGE	2						M6XP1.0

----> Old replace New
<---> Interchangeable
* Please place an order assy(*)
<---- New replace Old
<-O-> Interchangeable with another part(s)
<-X-> Not interchangeable

https://tractormanualz.com/

TC2-G511503

ENGINE ELECTRICAL GROUP(2)

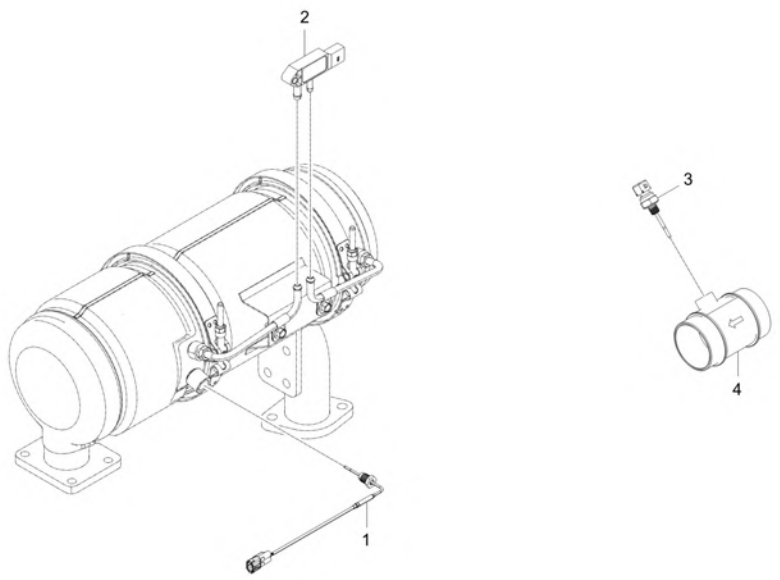

A : CK3510SEB

No.	Part Number	Description	Qty A	Qty B	Qty C	Qty D	Qty E	I.C	Remark
1	F5800-26501	EXHAUST GAS TEMPERATURE SENSOR	1						
1	F5800-26502	EXHAUST GAS TEMPERATURE SENSOR	1					<----->	
2	EF17-0007A	SENSOR, DPF DIFF PRESS	1						
3	EH19-0004A	ASSY SENSOR, INTAKE AIR TEMP-T1	1						
4	EH39-0002A	HOUSING-INTAKE TEMP SENSOR	1						
4	EH39-0002B	HOUSING-INTAKE TEMP SENSOR	1					<----->	

----> Old replace New
<----> Interchangeable
* Please place an order assy(*)
<---- New replace Old
<-O-> Interchangeable with another part(s)
<-X-> Not interchangeable

https://tractormanualz.com/

TC2-G515009

START CONTROL GROUP

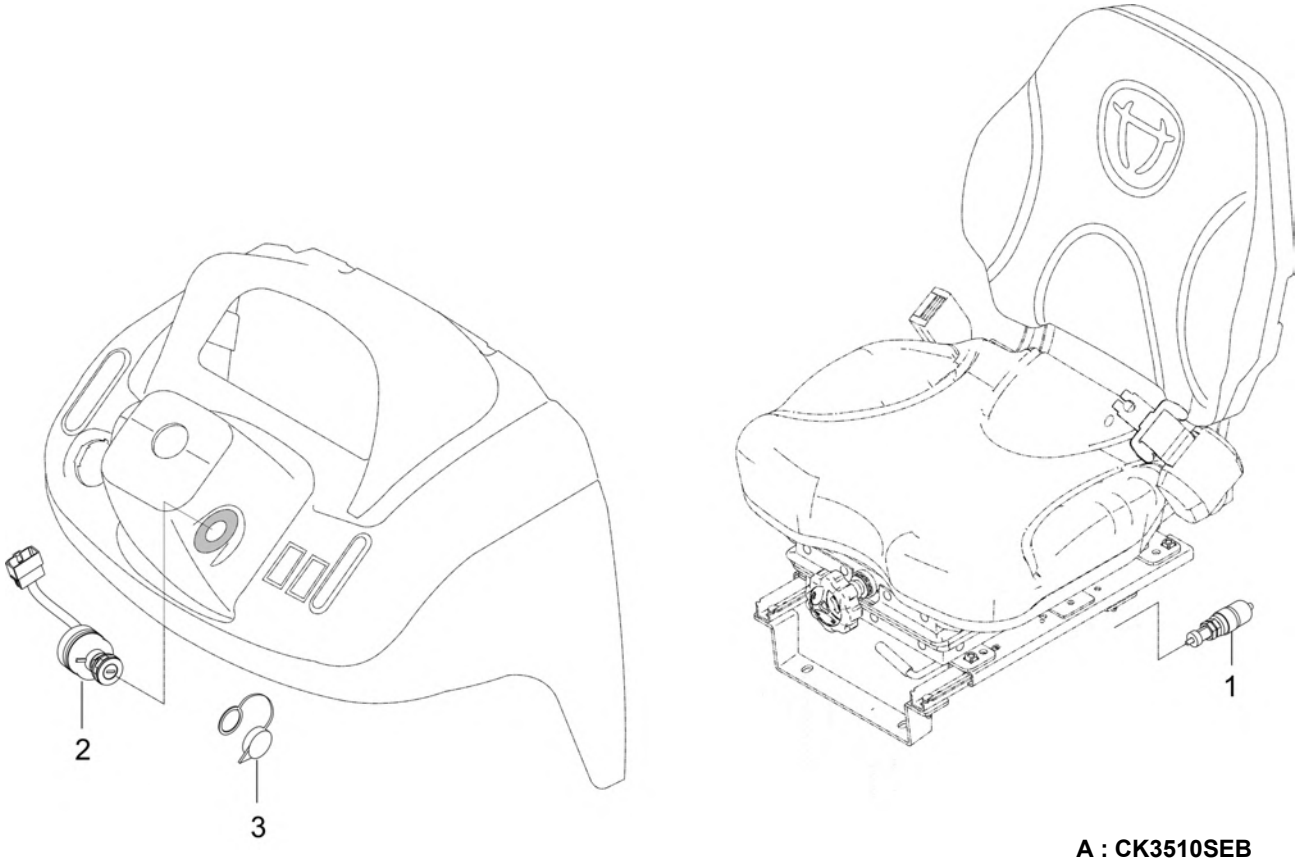

A : CK3510SEB

No.	Part Number	Description	Qty A	Qty B	Qty C	Qty D	Qty E	I.C	Remark
1	T4520-75481	SWITCH,SAFETY STARTER	1						
2	T5520-75171	ASSY SWITCH, STARTER v	1						
3	T4837-77774	COVER, STARTER SWITCH PROOF WATER	1						

----> Old replace New
<---- New replace Old
<-X-> Not interchangeable
<---> Interchangeable
<-O-> Interchangeable with another part(s)
* Please place an order assy(*)

https://tractormanualz.com/

TC2-G531030

WIRE HARNESS GROUP

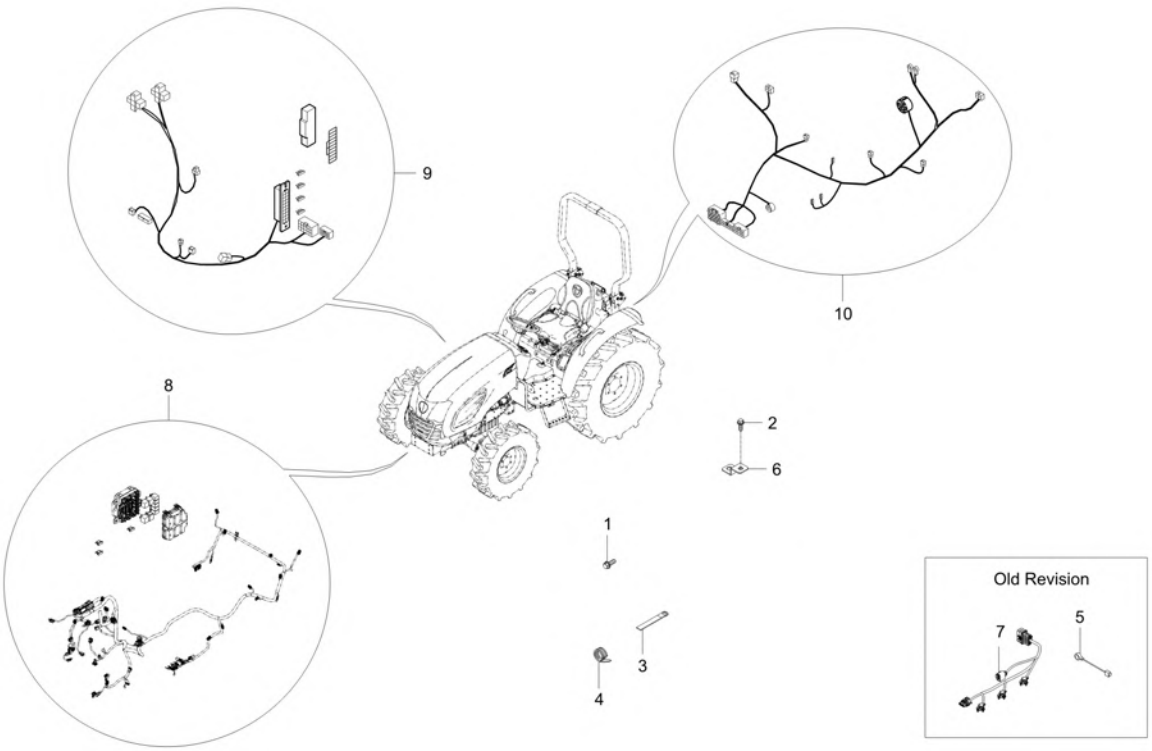

A : CK3510SEB

No.	Part Number	Description	Qty A	Qty B	Qty C	Qty D	Qty E	I.C	Remark
1	01754-50616	BOLT, FLANGE v	3						M6*P1.0
2	01754-50620	BOLT, FLANGE	2						
3	34150-2939-1	CLAMP, WIRE	1						-
4	T2198-82571	BAND CABLE	6						
5	T4620-69362	WIRE HARNESS 1	1						
6	T5250-68771	BRACKET	2						
7	T5525-69313	INJECTOR CONNECTION WIRE HARNESS ASSAY	1						
8	TC25-0070A	ASSY WIRE HARNESS, ENGINE	1						
8	TC25-0070B	ASSY WIRE HARNESS, ENGINE v	1 TJJ700003 ~ UJJ700116					<------	
8	TC25-0070C	ASSY WIRE HARNESS, ENGINE	1					<--O-->	
8	TC25-0070D	ASSY WIRE HARNESS, ENGINE	1 UJJ700117 ~ UJJ700224					<------	
8	TC25-0070E	ASSY WIRE HARNESS, ENGINE	1 VJJ700017 ~ VJJ700032					<--X-->	
8	TC25-0070F	ASSY WIRE HARNESS, ENGINE	1 VJJ700033 ~ WJJ700036					<----->	
9	TC25-0071A	ASSY WIRE HARNESS, PANEL	1						
9	TC25-0071B	ASSY WIRE HARNESS, PANEL	1 TJJ700003 ~ TJJ700030					<------	
9	TC25-0071C	ASSY WIRE HARNESS, PANEL	1 UJJ700001 ~ VJJ700016					<--O-->	
9	TC25-0071D	ASSY WIRE HARNESS, PANEL	1 VJJ700017 ~ WJJ700036					<--X-->	
10	TC25-0073A	ASSY WIRE HARNESS, FENDER obs v	1						

----> Old replace New
<---> Interchangeable
<---- New replace Old
<-O-> Interchangeable with another part(s)
<-X-> Not interchangeable
* Please place an order assy(*)

https://tractormanualz.com/

TC2-G531030

WIRE HARNESS GROUP

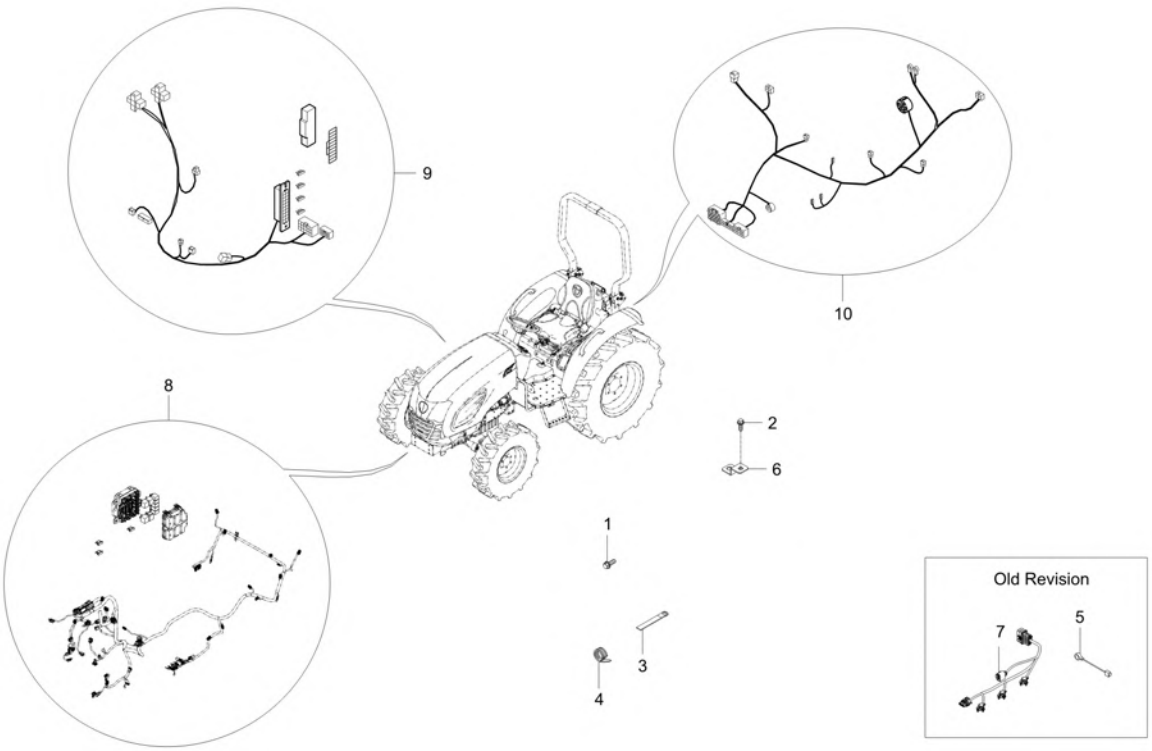

A : CK3510SEB

No.	Part Number	Description	Qty A	Qty B	Qty C	Qty D	Qty E	I.C	Remark
10	TC25-0073B	ASSY WIRE HARNESS, FENDER	1 TJJ700003 ~ TJJ700030					<------	
10	TC25-0073C	ASSY WIRE HARNESS, FENDER dnr v	1 TJJ700031 ~ UJJ700136					<--O-->	
10	TC25-0073D	ASSY WIRE HARNESS, FENDER v	1 UJJ700137 ~ VJJ700016					<------	
10	TC25-0073E	ASSY WIRE HARNESS, FENDER	1 VJJ700017 ~ WJJ700036					<--X-->	
11	37150-3447-1	WIR'G CLAMP	1						T0.5

----> Old replace New
<---> Interchangeable
* Please place an order assy(*)
<---- New replace Old
<-O-> Interchangeable with another part(s)
<-X-> Not interchangeable

https://tractormanualz.com/

TC2-G533020

DISPLAY CONTROL GROUP

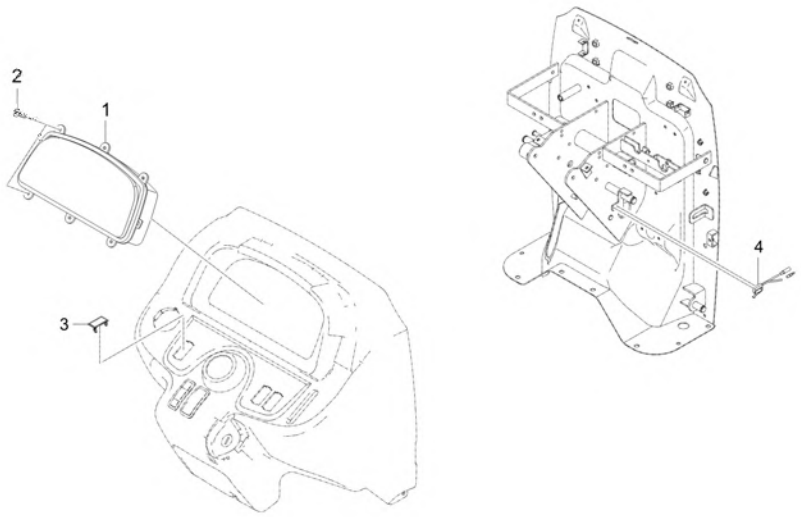

A : CK3510SEB

No.	Part Number	Description	Qty A	Qty B	Qty C	Qty D	Qty E	I.C	Remark
1	TC25-0060D	ASSY PLATE,METER v	1						
2	38240-1883-1	TAPPING SCREW dnr v	6						M4X16
3	T4025-68301	COVER	2						
4	T2198-68811	MICRO SWITCH	1						DC30V 3A

----> Old replace New
<----> Interchangeable
* Please place an order assy(*)
<---- New replace Old
<-O-> Interchangeable with another part(s)
<-X-> Not interchangeable

https://tractormanualz.com/

TC2-G534007

PTO CONTROL GROUP

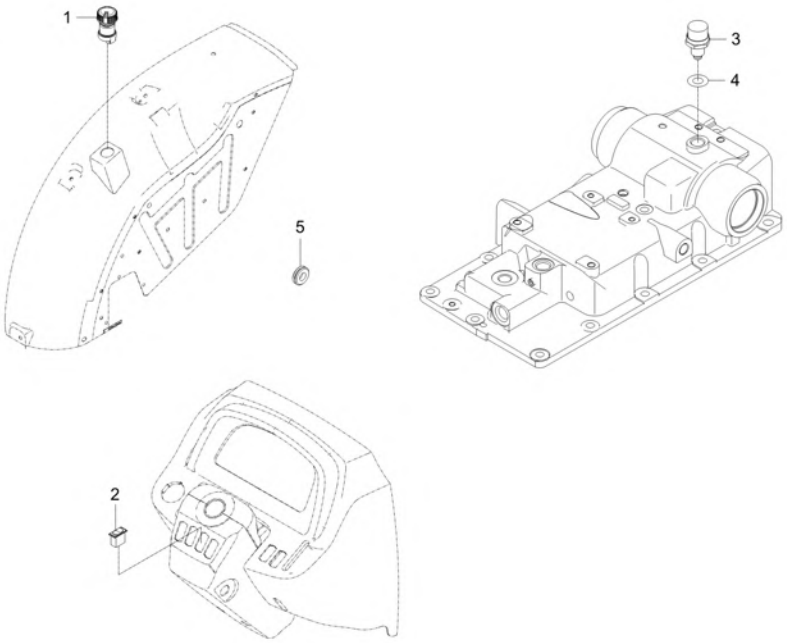

A : CK3510SEB

No.	Part Number	Description	Qty A	Qty B	Qty C	Qty D	Qty E	I.C	Remark
1	TC25-0095A	SWITCH, PTO	1						
2	T5758-68361	SWITCH, PTO AUTO PASSIVE	1						
3	T5210-69401	ASSY SWITCH SAFETY v	1						
4	T4682-43571	COLLAR 1.0T, ADJUSTING	1						T1.0
5	C7130-65721	GROMMET	1						

----> Old replace New
<----> Interchangeable
* Please place an order assy(*)
<---- New replace Old
<-O-> Interchangeable with another part(s)
<-X-> Not interchangeable

https://tractormanualz.com/

TC2-G512001

ENGINE ELECTRICAL GROUP(3)

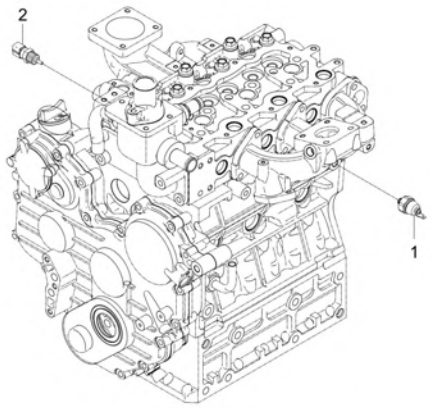

A : CK3510SEB

No.	Part Number	Description	Qty A	Qty B	Qty C	Qty D	Qty E	I.C	Remark
1	E5500-39013	OIL SWITCH	1						
2	E7240-32731	TEMPERATURE SENSOR ASSY	1						

----> Old replace New
<----> Interchangeable
* Please place an order assy(*)
<---- New replace Old
<-O-> Interchangeable with another part(s)
<-X-> Not interchangeable

https://tractormanualz.com/

TC2-G513001

STARTER MOTOR GROUP

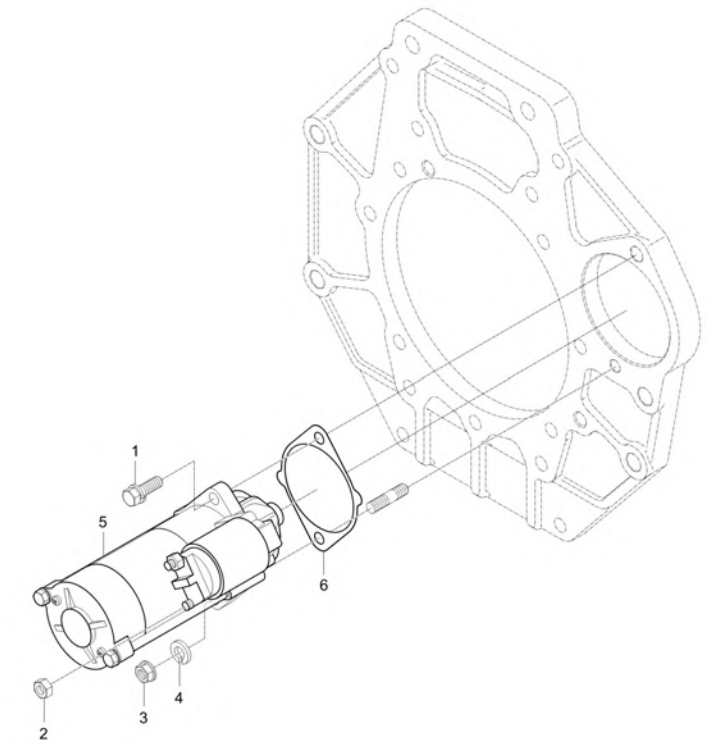

A : CK3510SEB

No.	Part Number	Description	Qty A	Qty B	Qty C	Qty D	Qty E	I.C	Remark
1	01133-51045	BOLT	1						
2	02176-50100	NUT v	1						M10XP1.25
3	02763-50080	FLANGE NUT	1						M8XP1.25
4	04512-50100	SPRING WASHER	1						M10
5	E5500-63016	ASSY, STARTER MOTOR sp v	1						
6	E6200-04623	GASKET v	1						T0.5

----> Old replace New
<----> Interchangeable
* Please place an order assy(*)
<---- New replace Old
<-O-> Interchangeable with another part(s)
<-X-> Not interchangeable

https://tractormanualz.com/

TC2-G513002

STARTER MOTOR GROUP

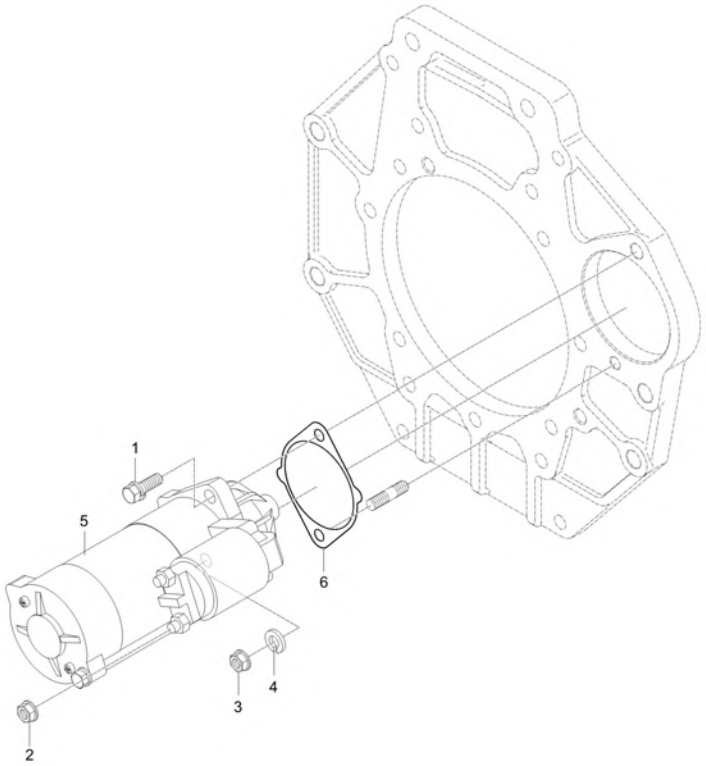

A : CK3510SEB

No.	Part Number	Description	Qty A	Qty B	Qty C	Qty D	Qty E	I.C	Remark
1	E6864-63011	ASSY STARTER	1						12V 1.7KW
2	E6200-04623	GASKET v	1						T0.5
3	01133-51050	BOLT	1						
4	04512-50100	SPRING WASHER	1						M10
5	02176-50100	NUT v	1						M10XP1.25
6	02763-50080	FLANGE NUT	1						M8XP1.25

----> Old replace New
<----> Interchangeable
* Please place an order assy(*)
<---- New replace Old
<-O-> Interchangeable with another part(s)
<-X-> Not interchangeable

https://tractormanualz.com/

TC2-G513501

BATTERY GROUP

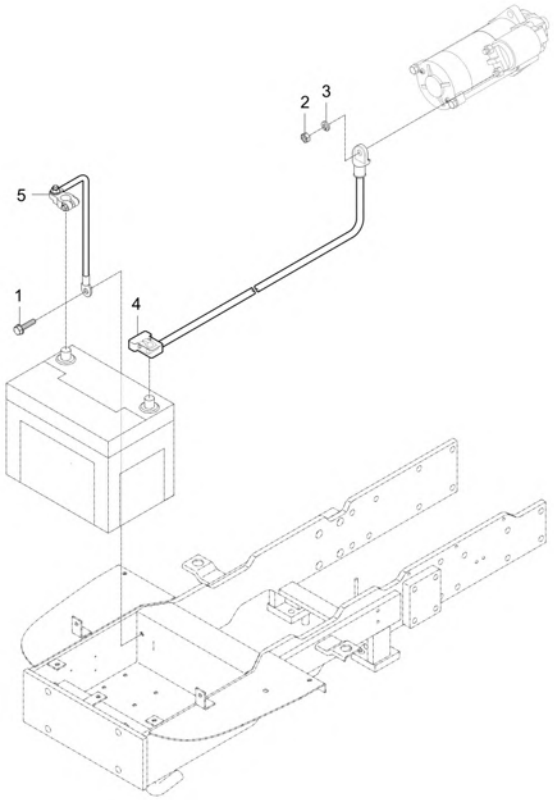

A : CK3510SEB

No.	Part Number	Description	Qty A	Qty B	Qty C	Qty D	Qty E	I.C	Remark
1	01754-50812	BOLT, FLANGE	1						M8XP1.25
2	02156-50080	NUT v	1						M8XP1.25
3	04512-50080	SPRING WASHER	1						M08
4	T5855-69162	CABLE, BATTERY	1						
5	T5855-69612	CABLE, BATTERY EARTH	1						

----> Old replace New
<---> Interchangeable
* Please place an order assy(*)
<---- New replace Old
<-O-> Interchangeable with another part(s)
<-X-> Not interchangeable

https://tractormanualz.com/

TC2-G514001

ALTERNATOR GROUP

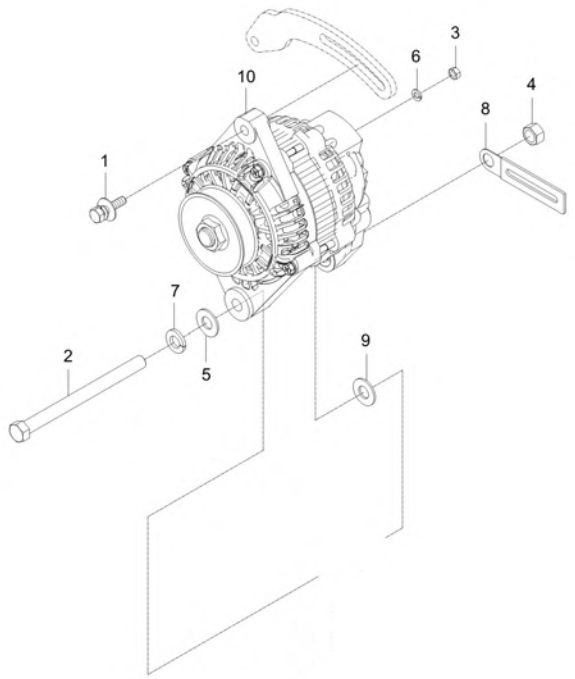

A : CK3510SEB

No.	Part Number	Description	Qty A	Qty B	Qty C	Qty D	Qty E	I.C	Remark
1	01173-51005	BOLT	1						
2	01774-51003	FLANGE_BOLT	1						M10XP1.25
3	02156-50080	NUT v	1						M8XP1.25
4	02176-50100	NUT v	1						M10XP1.25
5	04013-50100	PLAIN WASHER	2						M10
6	04512-50080	SPRING WASHER	1						M08
7	04512-50100	SPRING WASHER	1						M10
8	37155-3447-1	CLAMP,CORD	1						-
9	E5800-64102	SPACER	1						DIA24*T5.15
10	E7251-64011	ALTERNATOR ASSY 75AMP v	1						
10	E7251-64012	ALTERNATOR 75A	1					<------	

----> Old replace New
<---> Interchangeable
* Please place an order assy(*)
<---- New replace Old
<-O-> Interchangeable with another part(s)
<-X-> Not interchangeable

https://tractormanualz.com/

TC2-G514501

GLOW CONTROL GROUP

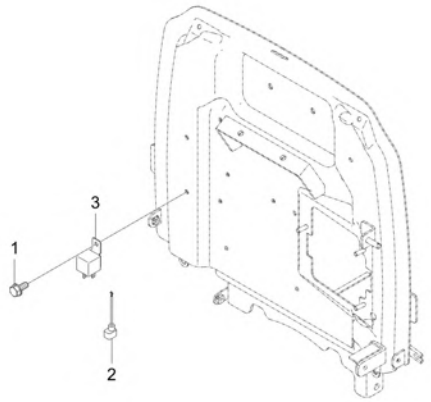

A : CK3510SEB

No.	Part Number	Description	Qty A	Qty B	Qty C	Qty D	Qty E	I.C	Remark
1	01754-50610	BOLT, FLANGE	1						M6XP1.0
2	T2198-69471	HARNESS WIRE 3, CABLE	1						
3	T5535-69951	RELAY 4P v	1						Bracket

----> Old replace New
<---> Interchangeable
* Please place an order assy(*)
<---- New replace Old
<-O-> Interchangeable with another part(s)
<-X-> Not interchangeable

https://tractormanualz.com/

TC2-G516002 FUEL HEATER GROUP(WIRE)

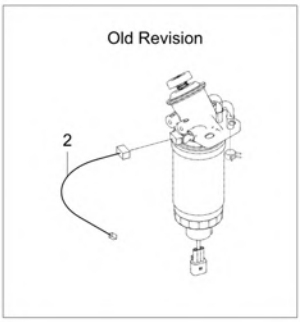

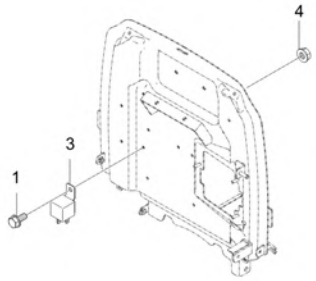

A : CK3510SEB

No.	Part Number	Description	Qty A	Qty B	Qty C	Qty D	Qty E	I.C	Remark
1	01754-50610	BOLT, FLANGE	1						M6XP1.0
2	T5520-69182	FUEL HEATER CONNECTION WIRE HARNESS ASSY v	1						
3	T5535-69961	RELAY,5P	1						Bracket
4	02761-50060	NUT, FLANGE	1						M6XP1.0

----> Old replace New <---- New replace Old <-X-> Not interchangeable
<---> Interchangeable <-O-> Interchangeable with another part(s)
* Please place an order assy(*)

https://tractormanualz.com/

TC2-G522002

TURN SIGNAL LAMP GROUP

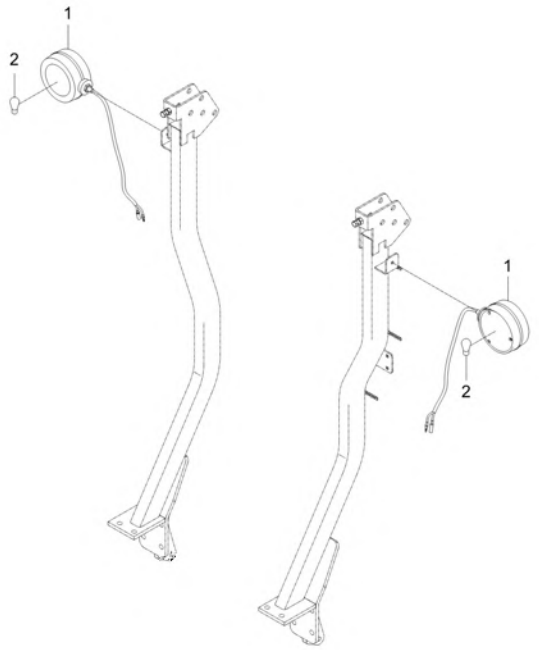

A : CK3510SEB

No.	Part Number	Description	Qty A	Qty B	Qty C	Qty D	Qty E	I.C	Remark
1	TB25-0009A	ASSY LAMP, TURN SIGNAL	2						
2	TB25-0010A	BULB-27W	1						

----> Old replace New
<----> Interchangeable
* Please place an order assy(*)
<---- New replace Old
<-O-> Interchangeable with another part(s)
<-X-> Not interchangeable

https://tractormanualz.com/

TC2-G522502

REAR COMBINATION LAMP GROUP

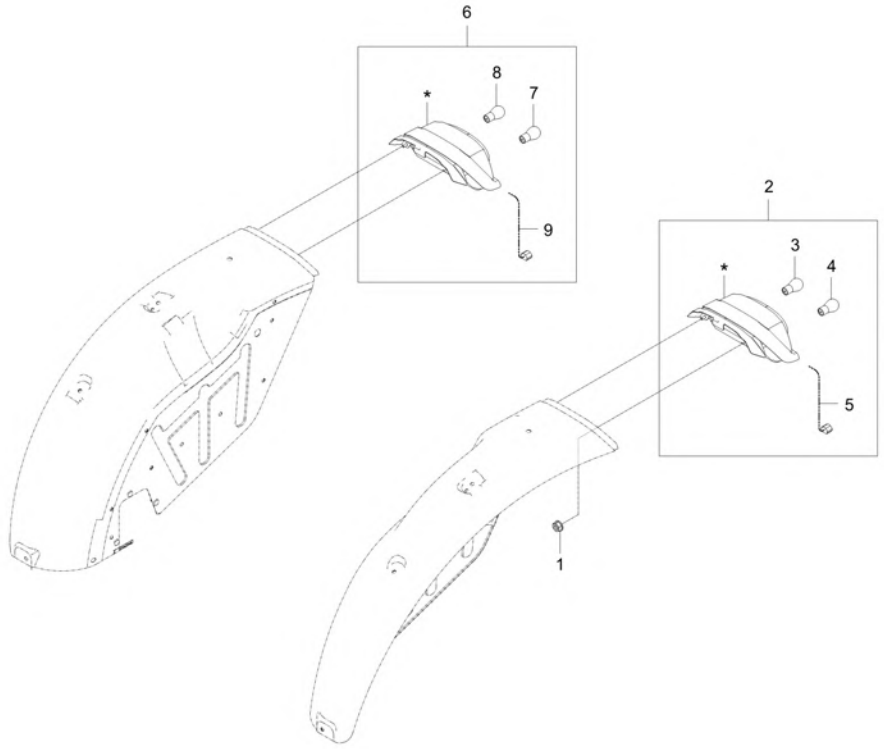

A : CK3510SEB

No.	Part Number	Description	Qty A	Qty B	Qty C	Qty D	Qty E	I.C	Remark
1	02761-50060	NUT, FLANGE	8						M6XP1.0
2	TC25-0080A	ASSY REAR, COMBINATION LAMP LH	1						
3	T5210-69741	BULB	1						
4	T2185-79061	BULB v	1						
5	T5710-69711003	WIRE, CONNECTION	1						
6	TC25-0081A	ASSY REAR, COMBINATION LAMP-RH	1						
7	T5210-69741	BULB	1						
8	T2185-79061	BULB v	1						
9	T5710-69711003	WIRE, CONNECTION	1						

----> Old replace New
<----> Interchangeable
* Please place an order assy(*)
<---- New replace Old
<-O-> Interchangeable with another part(s)
<-X-> Not interchangeable

https://tractormanualz.com/

TC2-G524004

REFLECTOR GROUP

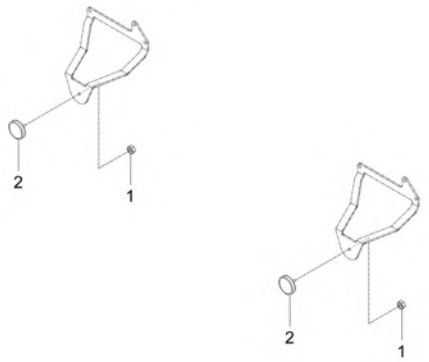

A : CK3510SEB

No.	Part Number	Description	Qty A	Qty B	Qty C	Qty D	Qty E	I.C	Remark
1	02761-50050	NUT, FLANGE	2						M5XP0.8
2	T5638-85721	ASS'Y REFLECTOR dnr v	2						

----> Old replace New
<----> Interchangeable
* Please place an order assy(*)
<---- New replace Old
<-O-> Interchangeable with another part(s)
<-X-> Not interchangeable

https://tractormanualz.com/

TC2-G525004

LIGHT CONTROL GROUP

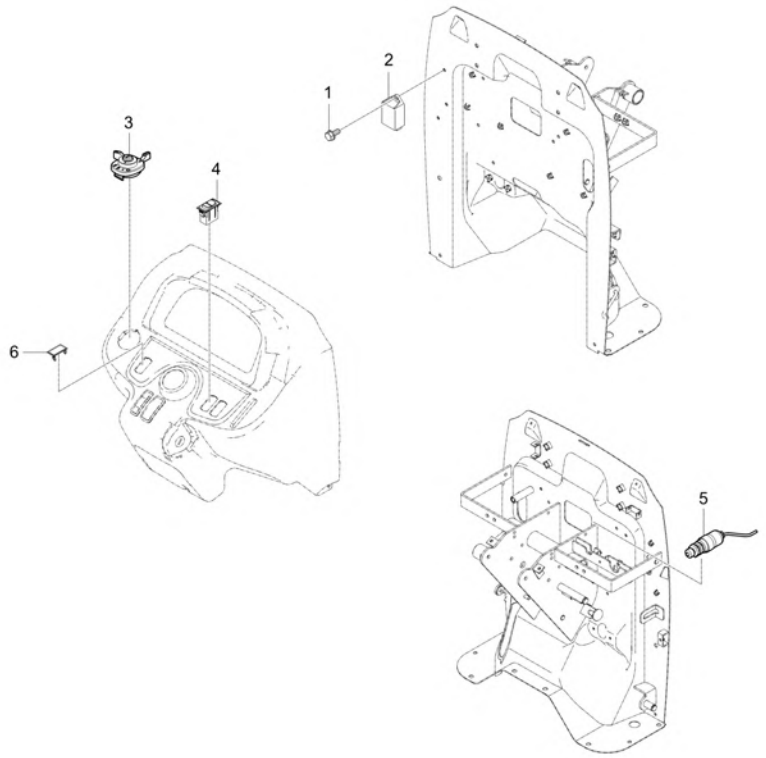

A : CK3510SEB

No.	Part Number	Description	Qty A	Qty B	Qty C	Qty D	Qty E	I.C	Remark
1	01754-50610	BOLT, FLANGE	1						M6XP1.0
2	T2198-31052	FLASH UNIT	1						
3	T2555-69023	ASS'Y COMBINATION SWITCH v	1						
4	T4025-68351	SWITCH, EMERGENCY LAMP	1						
5	T4520-41821	ASSY STOP SWITCH	1						
6	T4025-68301	COVER	1						

----> Old replace New
<---- New replace Old
<-X-> Not interchangeable
<---> Interchangeable
<-O-> Interchangeable with another part(s)
* Please place an order assy(*)

https://tractormanualz.com/

TC2-G527001

POWER SOCKET GROUP

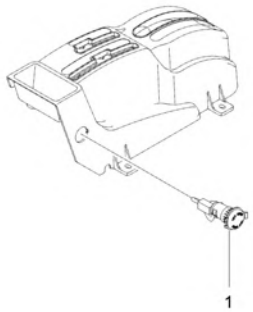

A : CK3510SEB

No.	Part Number	Description	Qty A	Qty B	Qty C	Qty D	Qty E	I.C	Remark
1	T4935-92502	POWER OUTLET ASS'Y(12V)	1						

----> Old replace New
<----> Interchangeable
* Please place an order assy(*)
<---- New replace Old
<-O-> Interchangeable with another part(s)
<-X-> Not interchangeable

https://tractormanualz.com/

TC2-G533501

FUEL SENDER GROUP

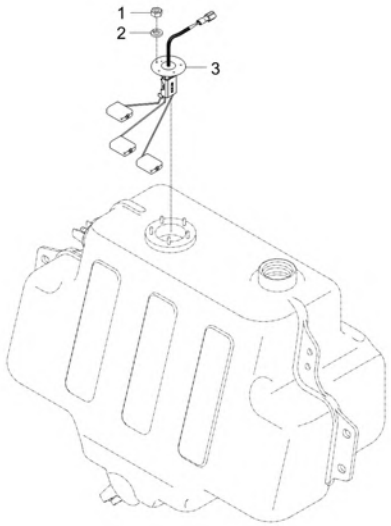

A : CK3510SEB

No.	Part Number	Description	Qty A	Qty B	Qty C	Qty D	Qty E	I.C	Remark
1	02054-50040	NUT	5						M4*P0.7
2	04512-50040	WASHER, SPRING	5						M4
3	T5855-69212	UNIT,FUEL dnr v	1 UJJ700001 ~ UJJ700200						
3	TC25-0103A	ASSY SENDER, FUEL	1 UJJ700201 ~ UJJ700224					<----->	
3	TC25-0103B	ASSY SENDER, FUEL	1					<------	
3	TC25-0103C	ASSY SENDER, FUEL v	1 UJJ700225 ~ WJJ700036					<------	

----> Old replace New
<---> Interchangeable
* Please place an order assy(*)
<---- New replace Old
<-O-> Interchangeable with another part(s)
<-X-> Not interchangeable

https://tractormanualz.com/

TC2-G534501

HORN GROUP

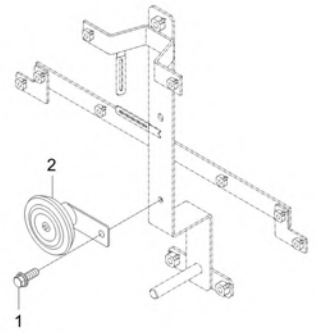

A : CK3510SEB

No.	Part Number	Description	Qty A	Qty B	Qty C	Qty D	Qty E	I.C	Remark
1	01123-50820	BOLT, WASHER v	1 UJJ700001 ~ UJJ700176						M8XP1.25
1	01023-50616	BOLT, WASHER	1 UJJ700177 ~ WJJ700036					<------	M6*P1.0
2	T4144-75952	ASSY HORN	1						70파이, 420Hz, 110

----> Old replace New
<---> Interchangeable
* Please place an order assy(*)
<---- New replace Old
<-O-> Interchangeable with another part(s)
<-X-> Not interchangeable

https://tractormanualz.com/

TC2-G535001

TIER4 CONTROL GROUP

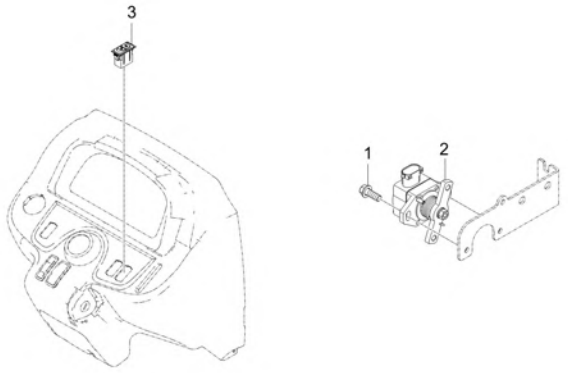

A : CK3510SEB

No.	Part Number	Description	Qty A	Qty B	Qty C	Qty D	Qty E	I.C	Remark
1	01023-50616	BOLT, WASHER	2						M6*P1.0
2	F6800-60011	THROTTLE POSITION SENSOR	1						
2	TD25-0140A	ASSY SENSOR, THROTTLE POSITION	1					<----->	
3	T5275-69251	DPF SWITCH	1						

----> Old replace New
<---> Interchangeable
* Please place an order assy(*)
<---- New replace Old
<-O-> Interchangeable with another part(s)
<-X-> Not interchangeable

https://tractormanualz.com/

TC2-G511001 ENGINE ELECTRICAL GROUP(1)

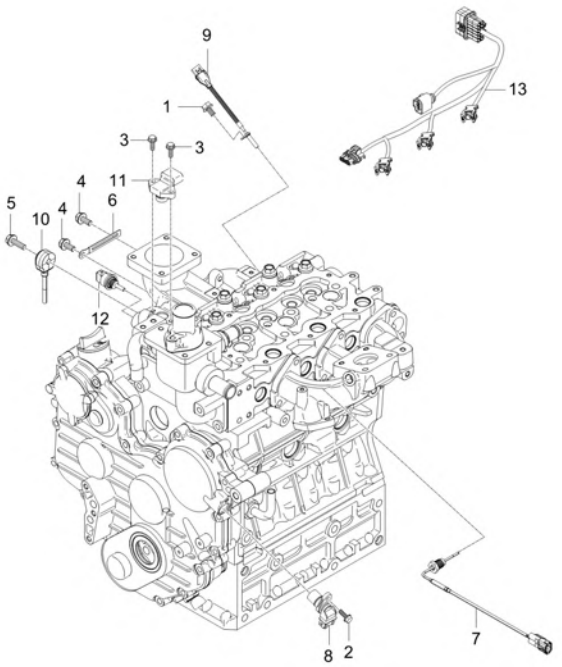

A : CK3510SEB

No.	Part Number	Description	Qty A	Qty B	Qty C	Qty D	Qty E	I.C	Remark
1	01754-50616	BOLT, FLANGE v	1						M6XP1.0
1	01754-50610	BOLT, FLANGE	1 VJJ700017 ~ VJJ700016					<------	M6XP1.0
2	01754-50616	BOLT, FLANGE v	1						M6XP1.0
3	01754-50616	BOLT, FLANGE v	2						M6XP1.0
4	01754-50812	BOLT, FLANGE	2						M8XP1.25
5	01754-50830	BOLT FLANGE	1						M8XP1.25
6	37150-3447-1	WIR'G CLAMP	2 TJJ700003 ~ WJJ700036						T0.5
6	37150-3447-1	WIR'G CLAMP	1					<------	T0.5
7	F5800-26501	EXHAUST GAS TEMPERATURE SENSOR	1						
7	F5800-26502	EXHAUST GAS TEMPERATURE SENSOR	1					<----->	
8	F6800-26201	SENSOR, CAMSHAFT WHEEL v	1						
9	F6800-26303	SENSOR, CRANKSHAFT WHEEL dnr v	1						
9	EH29-0002A	ASSY SENSOR, CRANKSHAFT WHEEL v	1					<------	
10	F6800-26401	SENSOR, KNOCK	1						
11	F6800-26701	SENSOR, INTAKE AIR PRESSURE	1						
12	F6800-26751	SENSOR, INTAKE AIR TEMPERATURE	1						
13	T5525-69313	INJECTOR CONNECTION WIRE HARNESS ASSAY	1						

----> Old replace New <---- New replace Old <-X-> Not interchangeable
<---> Interchangeable <-O-> Interchangeable with another part(s)
* Please place an order assy(*)

https://tractormanualz.com/

TC2-G511501

ENGINE ELECTRICAL GROUP(2)

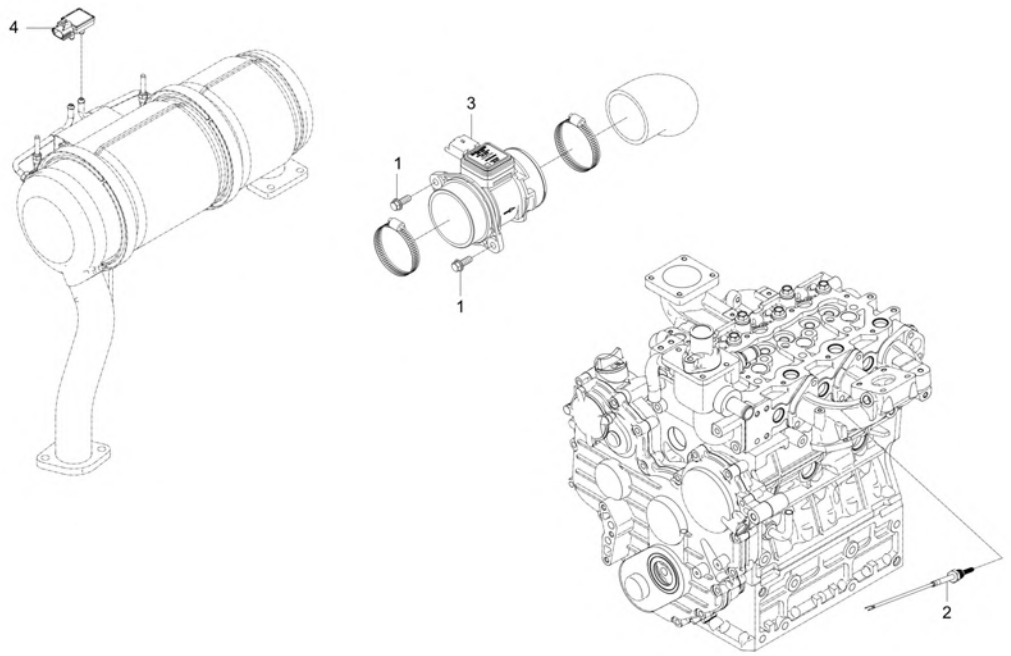

A : CK3510SEB

No.	Part Number	Description	Qty A	Qty B	Qty C	Qty D	Qty E	I.C	Remark
1	01754-50610	BOLT, FLANGE	2						M6XP1.0
2	F5800-26501	EXHAUST GAS TEMPERATURE SENSOR	1						
3	F5800-26801	SENSOR, AIR MASS FLOW	1						N
4	F6800-26651	SENSOR, DPF DIFFERENTIAL PRESSURE	1						

----> Old replace New
<---- New replace Old
<-X-> Not interchangeable
<---> Interchangeable
<-O-> Interchangeable with another part(s)
* Please place an order assy(*)

https://tractormanualz.com/

TC2-G515004

START CONTROL GROUP

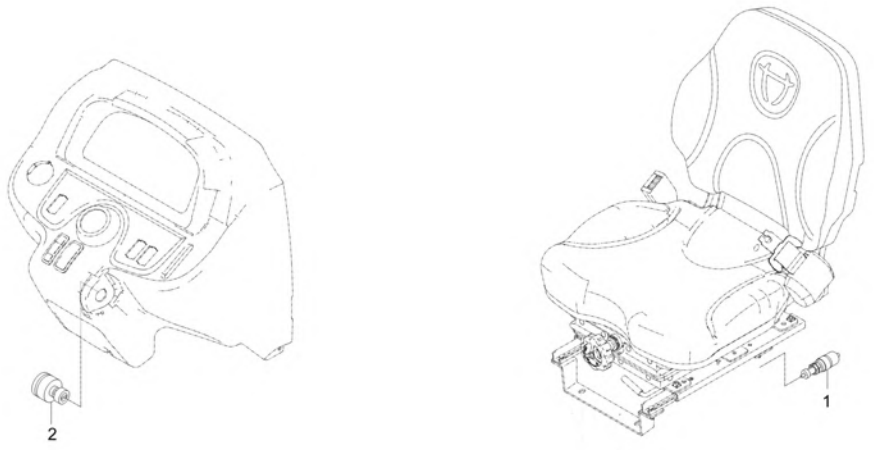

A : CK3510SEB

No.	Part Number	Description	Qty A	Qty B	Qty C	Qty D	Qty E	I.C	Remark
1	T4520-75481	SWITCH,SAFETY STARTER	1						
2	T5520-75171	ASSY SWITCH, STARTER v	1						

----> Old replace New
<---- New replace Old
<-X-> Not interchangeable
<---> Interchangeable
<-O-> Interchangeable with another part(s)
* Please place an order assy(*)

https://tractormanualz.com/

TC2-G521001

HEAD LIGHT GROUP

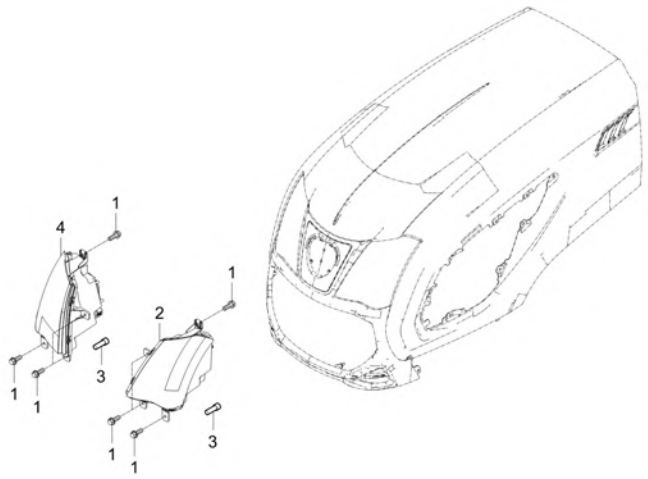

A : CK3510SEB

No.	Part Number	Description	Qty A	Qty B	Qty C	Qty D	Qty E	I.C	Remark
1	01754-50616	BOLT, FLANGE v	8						M6*P1.0
2	T5710-69513	HEAD LAMP ASSY LH	1						
3	T2555-69571	BULB	1						H7 12V 55W
4	T5710-69523	HEAD LAMP ASSY RH	1						

----> Old replace New
<---- New replace Old
<-X-> Not interchangeable
<---> Interchangeable
<-O-> Interchangeable with another part(s)
* Please place an order assy(*)

https://tractormanualz.com/

TC2-G532501

HEAD LAMP WIRE HARNESS GROUP

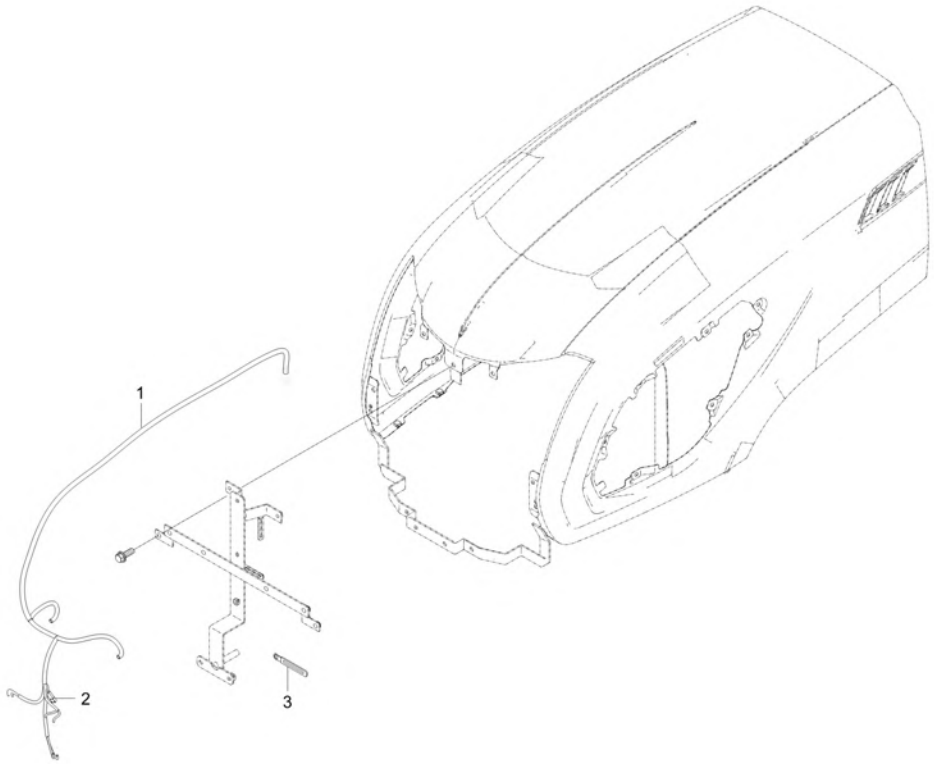

A : CK3510SEB

No.	Part Number	Description	Qty A	Qty B	Qty C	Qty D	Qty E	I.C	Remark
1	37150-3447-1	WIR'G CLAMP	3						T0.5
2	T5710-69391	ASS'Y WIRE HARNESS HEAD LAMP	1						
3	T4620-69331	DIODE 2P	1						800V,3.0A

----> Old replace New
<----> Interchangeable
* Please place an order assy(*)
<---- New replace Old
<-O-> Interchangeable with another part(s)
<-X-> Not interchangeable

https://tractormanualz.com/

TC2-G533010

DISPLAY CONTROL GROUP

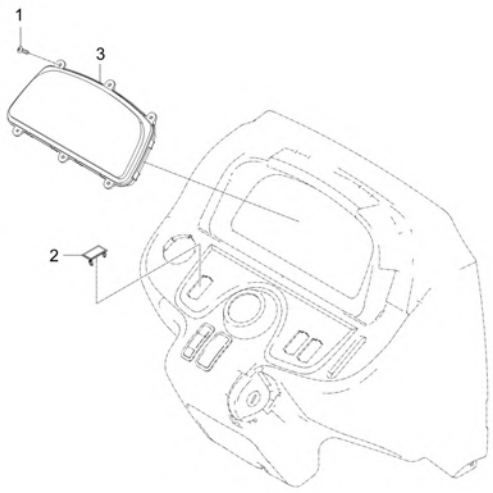

A : CK3510SEB

No.	Part Number	Description	Qty A	Qty B	Qty C	Qty D	Qty E	I.C	Remark
1	38240-1883-1	TAPPING SCREW dnr v	6						M4X16
2	T4025-68301	COVER	3						
3	TC25-0060A	ASSY PANEL, INSTRUMENT-TIER4 v	1 UJJ700001 ~ UJJ700176						
3	TC25-0060B	ASSY PANEL, INSTRUMENT-TIER4 dnr v	1 UJJ700177 ~ UJJ700224					<------	
3	TC25-0060C	ASSY PLATE,METER	1 UJJ700225 ~ VJJ700008					<------	
3	TC25-0060D	ASSY PLATE,METER v	1 VJJ700009 ~ WJJ700036					<------	

----> Old replace New
<---- New replace Old
<-X-> Not interchangeable
<---> Interchangeable
<-O-> Interchangeable with another part(s)
* Please place an order assy(*)

https://tractormanualz.com/

TC2-G6D1040 LABEL(BONNET COVER) GROUP(35HP MEC IND.P

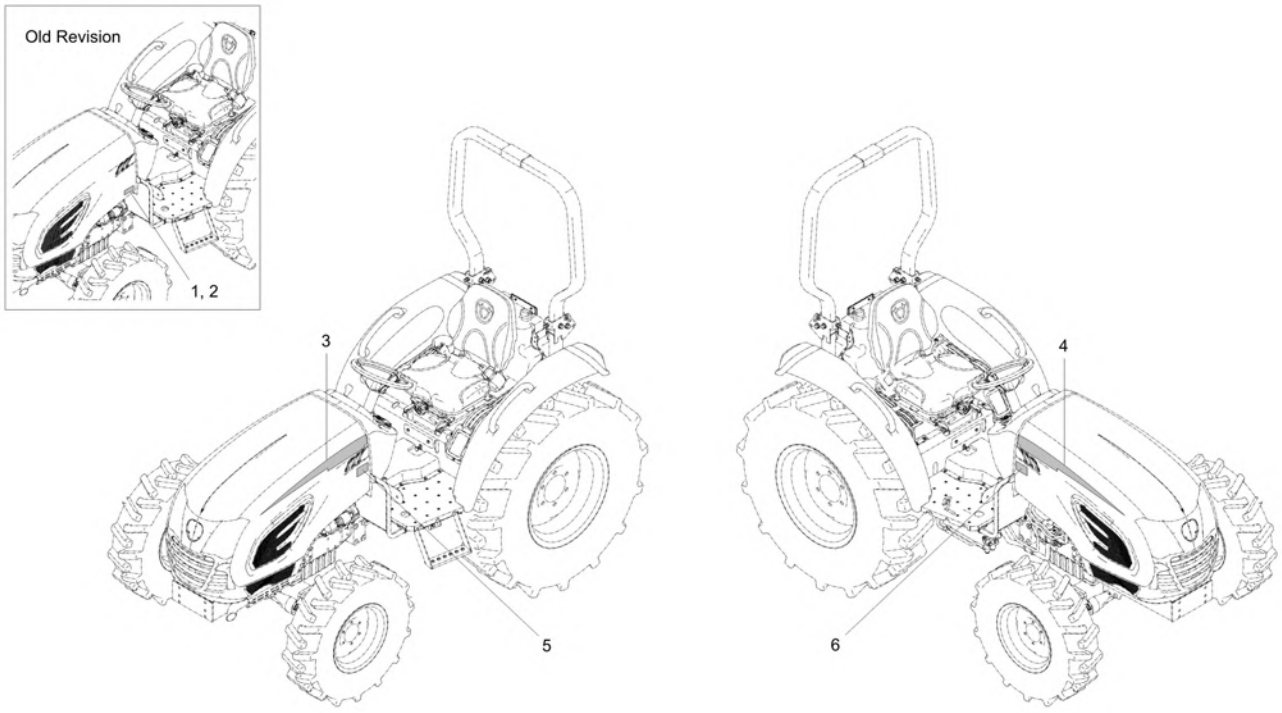

A : CK3510SEB

No.	Part Number	Description	Qty A	Qty B	Qty C	Qty D	Qty E	I.C	Remark
1	T5270-52011	LABEL, ECO CRDI	1						
2	T5270-52011	LABEL, ECO CRDI	1						
3	T5715-55411	BRAND LABEL, LH	1						
4	T5715-55431	BRAND LABEL, RH	1						
5	TC26-1203A	LABEL, MODEL-CK3510SE	1						
6	TC26-1203A	LABEL, MODEL-CK3510SE	1						

----> Old replace New
<----> Interchangeable
* Please place an order assy(*)
<---- New replace Old
<-O-> Interchangeable with another part(s)
<-X-> Not interchangeable

https://tractormanualz.com/

TC2-G6D2002

LABEL(MFG CERTIFICATE) GROUP

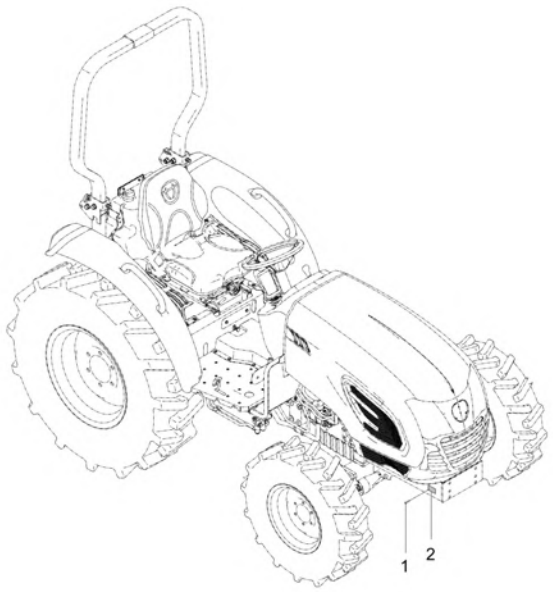

A : CK3510SEB

No.	Part Number	Description	Qty A	Qty B	Qty C	Qty D	Qty E	I.C	Remark
1	05624-20408	RIVET	4						
2	T4935-52011	NAME PLATE	1						T0.5
3	TC26-1563A	LABEL, CERTIFICATE ROPS-ASAE S478	1						
3	TC26-1563B	LABEL, CERTIFICATE ROPS-ASAE S478	1					<------	

----> Old replace New
<---> Interchangeable
* Please place an order assy(*)
<---- New replace Old
<-O-> Interchangeable with another part(s)
<-X-> Not interchangeable

https://tractormanualz.com/

TC2-G6D3039

LABEL(MAIN/ETC) GROUP

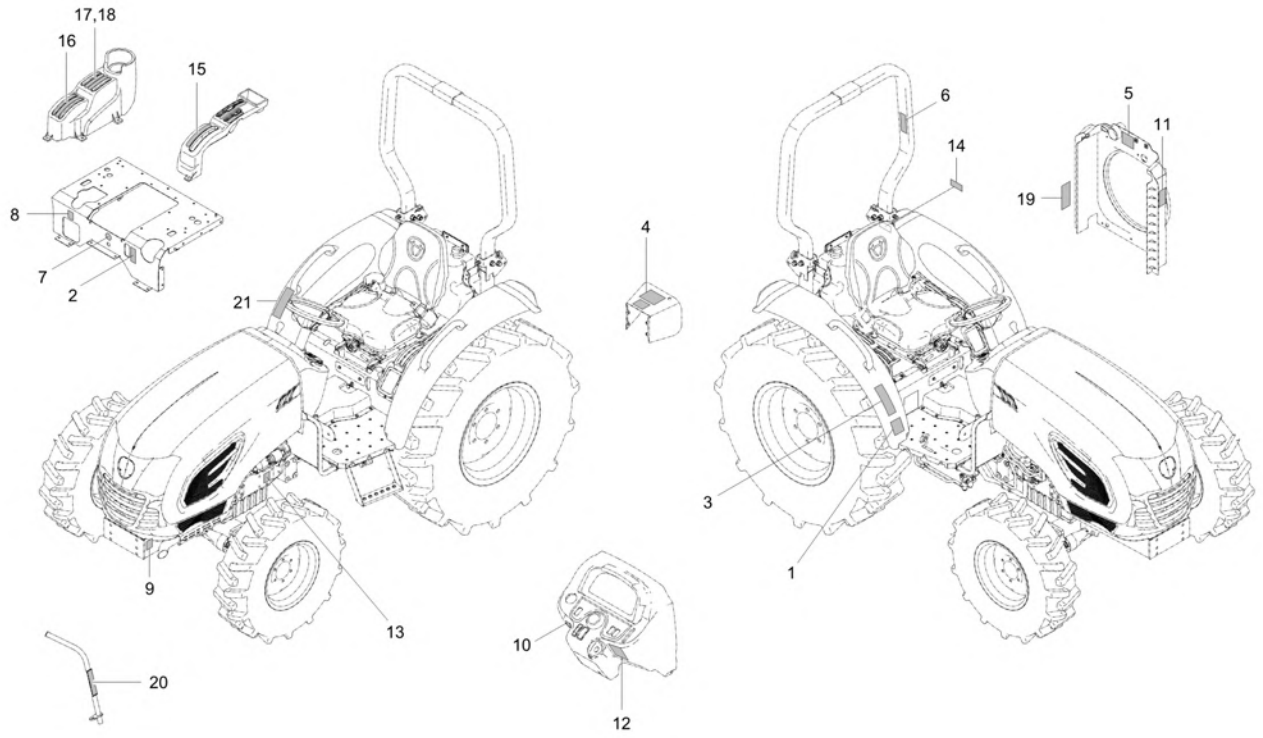

A : CK3510SEB

No.	Part Number	Description	Qty A	Qty B	Qty C	Qty D	Qty E	I.C	Remark
1	EF36-0018A	LABEL, CAUTION	1						
2	T2241-50311	NAME,PLATE	1						
3	T2555-52141	LABEL,CAUTION	1						
4	T2555-52262	LABEL, CAUTION	1						
5	T2555-52282	LABEL RADIATOR v	1						
6	T2555-52353	ROPS LABEL	1						
7	T2610-52461	LABEL, SPEED CONTROL	1						
8	T2611-26693	LABEL, DIFFERENTIAL FIXING	1						
9	T2615-55112	LABEL, MUFFLER CAUTION	1						T0.05-0.08
10	T4125-53121	LABEL,PARKING	1						
11	T4625-52351	LABEL, FAN CAUTION	1						
12	T4938-52351	LABEL, BRAKE REMINDER	1						
13	T4938-53551	LABEL	1						
14	TC26-0388A	LABEL, WARNING FUELING	1						
15	TC26-1087A	LABEL, LEVER RANGE SHIFT	1						
16	TC26-1089A	LABEL, LEVER POSITION DRAFT	1						
17	TC26-1090A	LABEL, DOUBLE ACTING LEVER v	1						
18	TC26-1091A	LABEL, DOUBLE ACTING LEVER	1						

----> Old replace New
<---- New replace Old
<-X-> Not interchangeable
<---> Interchangeable
<-O-> Interchangeable with another part(s)
* Please place an order assy(*)

https://tractormanualz.com/

TC2-G6D3039

LABEL(MAIN/ETC) GROUP

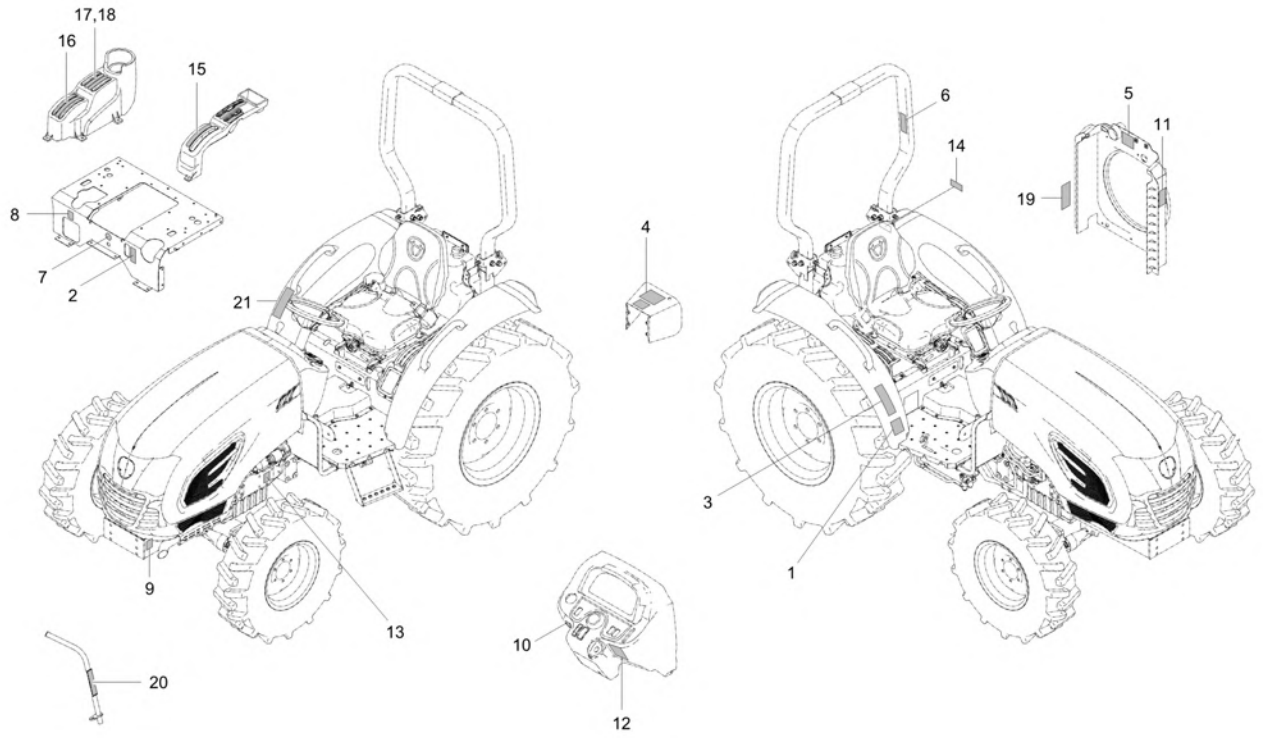

A : CK3510SEB

No.	Part Number	Description	Qty A	Qty B	Qty C	Qty D	Qty E	I.C	Remark
19	TG16-1530A	DAEDONGOILLABEL(EN)	1 TJJ700003 ~ WJJ700036						80 x 35
19	TG16-1530A	DAEDONGOILLABEL(EN)	2					<------	80 x 35
19	TG16-1530B	DAEDONG OIL LABEL	1					<------	80 x 35
20	TG16-1540A	DAEDONGOILLABEL(EN)	1						135 x 35
21	TD26-1009A	LABEL, WARNING	1 UJJ700225 ~ VJJ700088						-
21	TD26-1009B	LABEL, WARNING	1 VJJ700089 ~ WJJ700036					<------	-

----> Old replace New
<----> Interchangeable
* Please place an order assy(*)
<---- New replace Old
<-O-> Interchangeable with another part(s)
<-X-> Not interchangeable

https://tractormanualz.com/

TC2-G6F4004

DUST SHIELD PLATE GROUP

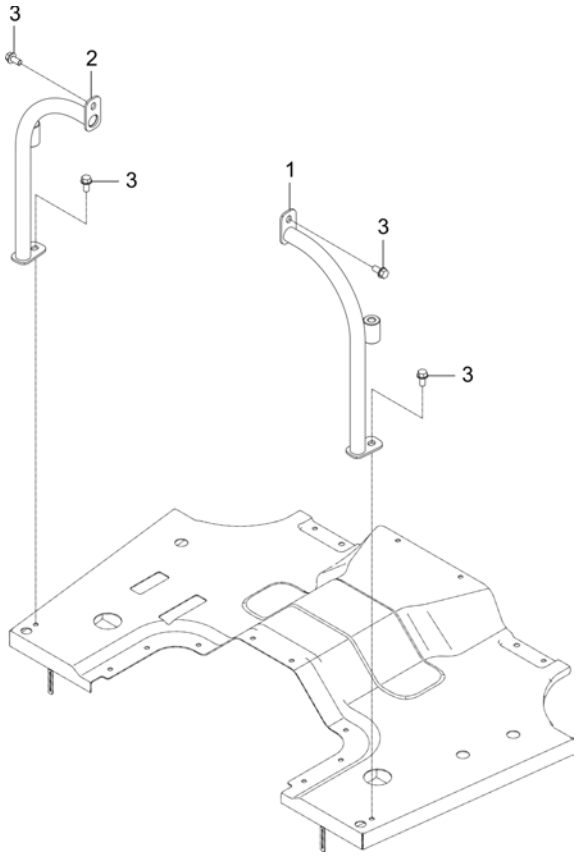

A : CK3510SEB

No.	Part Number	Description	Qty A	Qty B	Qty C	Qty D	Qty E	I.C	Remark
1	TC26-1433A	BRACKET, DIRECTION LAMP-LH	1						
2	TC26-1434A	BRACKET, DIRECTION LAMP-RH	1						
3	01754-50816	BOLT, FLANGE	4						M8XP1.25

----> Old replace New
<---- New replace Old
<-X-> Not interchangeable
<---> Interchangeable
<-O-> Interchangeable with another part(s)
* Please place an order assy(*)

https://tractormanualz.com/

TC2-G611018

AIR CLEANER GROUP

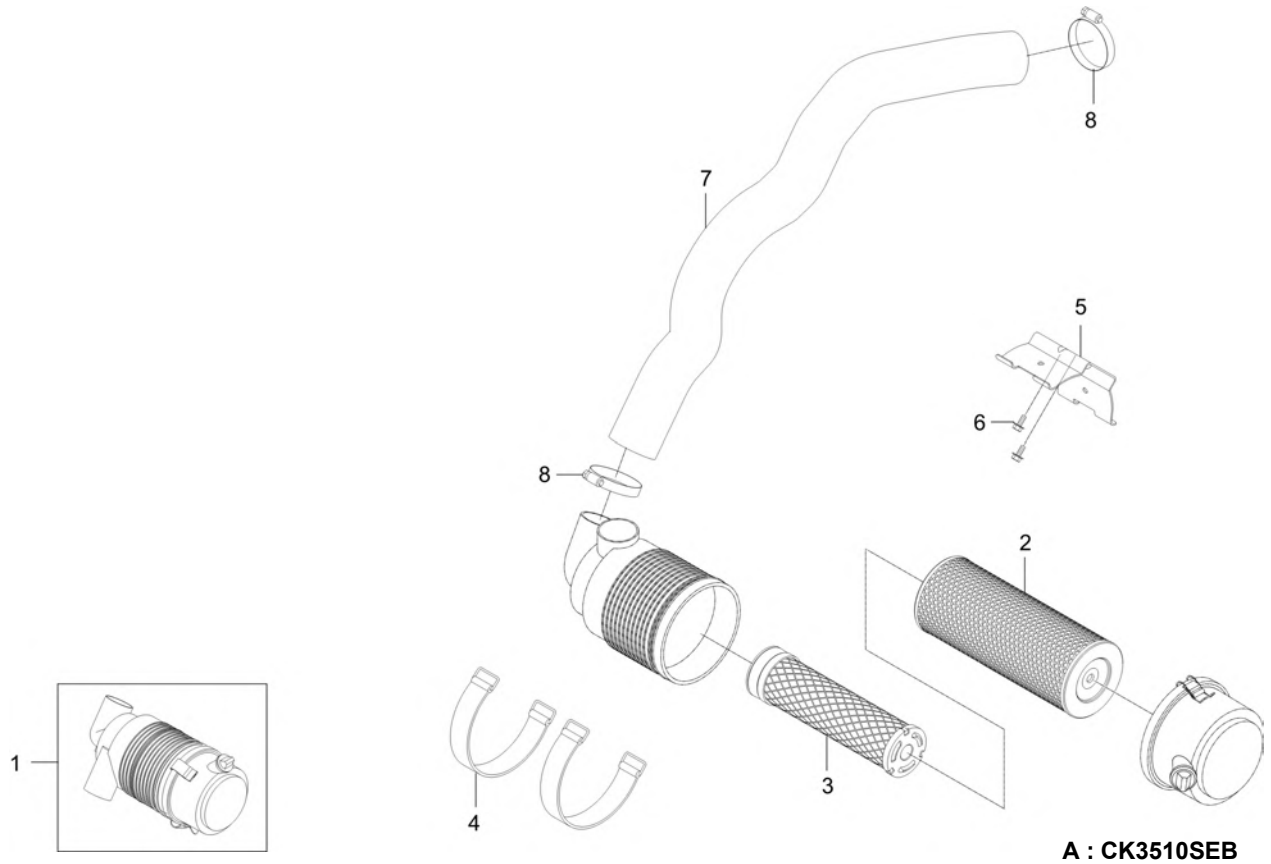

A : CK3510SEB

No.	Part Number	Description	Qty A	Qty B	Qty C	Qty D	Qty E	I.C	Remark
1	TC26-1866A	AIR CLEANER ASSY(5.5IN, DUAL)	1						
2	TC26-1869A	MAIN FILTER(5.5IN)	1						
3	TC26-1870A	SUB FILTER(5.5IN)	1						
4	38325-1398-1	BAND,AIR CLEANER	2						
5	TC26-0447A	BRACKET, AIR CLEANER HOLDER	1						T2.3
6	01754-50816	BOLT, FLANGE	2						M8XP1.25
7	TC26-0414A	HOSE, SUCTION	1						OD75 / ID63
8	KX97382-S51	ASSY, CLAMP v	2						DIA70스탠 76#
9	TC26-1947A	RUBBER, CUSHION	2						

----> Old replace New
<---- New replace Old
<-X-> Not interchangeable
<---> Interchangeable
<-O-> Interchangeable with another part(s)
* Please place an order assy(*)

https://tractormanualz.com/

TC2-G612603

DUSTPROOF NET GROUP

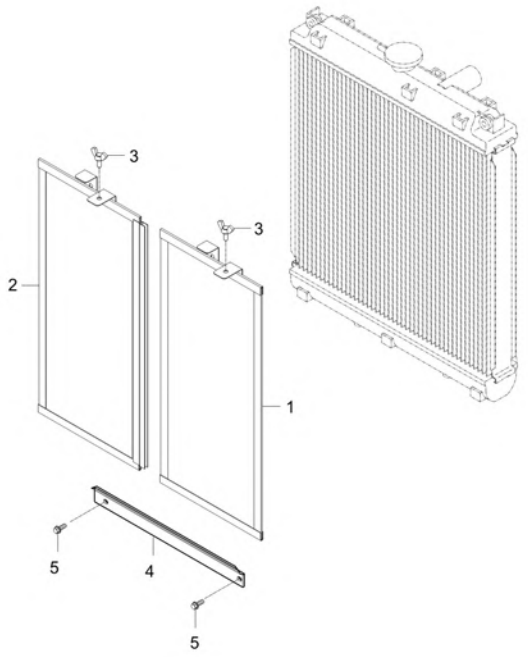

A : CK3510SEB

No.	Part Number	Description	Qty A	Qty B	Qty C	Qty D	Qty E	I.C	Remark
1	TC26-1802A	NET, RADIATOR-LH	1						
2	TC26-1803A	NET, RADIATOR-RH	1						
3	01811-50615	BOLT,WING	2						
4	TC26-1439A	BRACKET, GUIDE	1						T1.2
5	01754-50612	BOLT, FLANGE	2						M6*1.0

----> Old replace New
<---> Interchangeable
* Please place an order assy(*)
<---- New replace Old
<-O-> Interchangeable with another part(s)
<-X-> Not interchangeable

https://tractormanualz.com/

TC2-G621007

FRONT AXLE FRAME GROUP(OS)

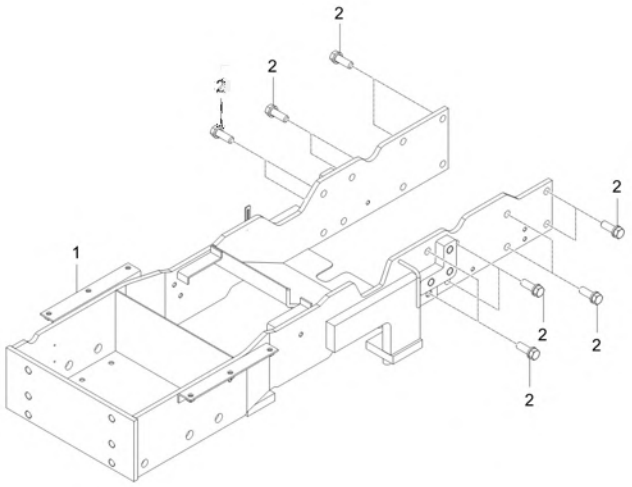

A : CK3510SEB

No.	Part Number	Description	Qty A	Qty B	Qty C	Qty D	Qty E	I.C	Remark
1	TC26-1794A	FRAME, FRONT AXLE-OS	1						
1	TC26-1794B	FRAME, FRONT AXLE-OS	1					<------	
2	01177-51235	BOLT v	16						M12XP1.25 (9T/스프

----> Old replace New
<---> Interchangeable
* Please place an order assy(*)
<---- New replace Old
<-O-> Interchangeable with another part(s)
<-X-> Not interchangeable

https://tractormanualz.com/

TC2-G631006 ROPS BAR GROUP(TELESCOPIC CHECK LINK)

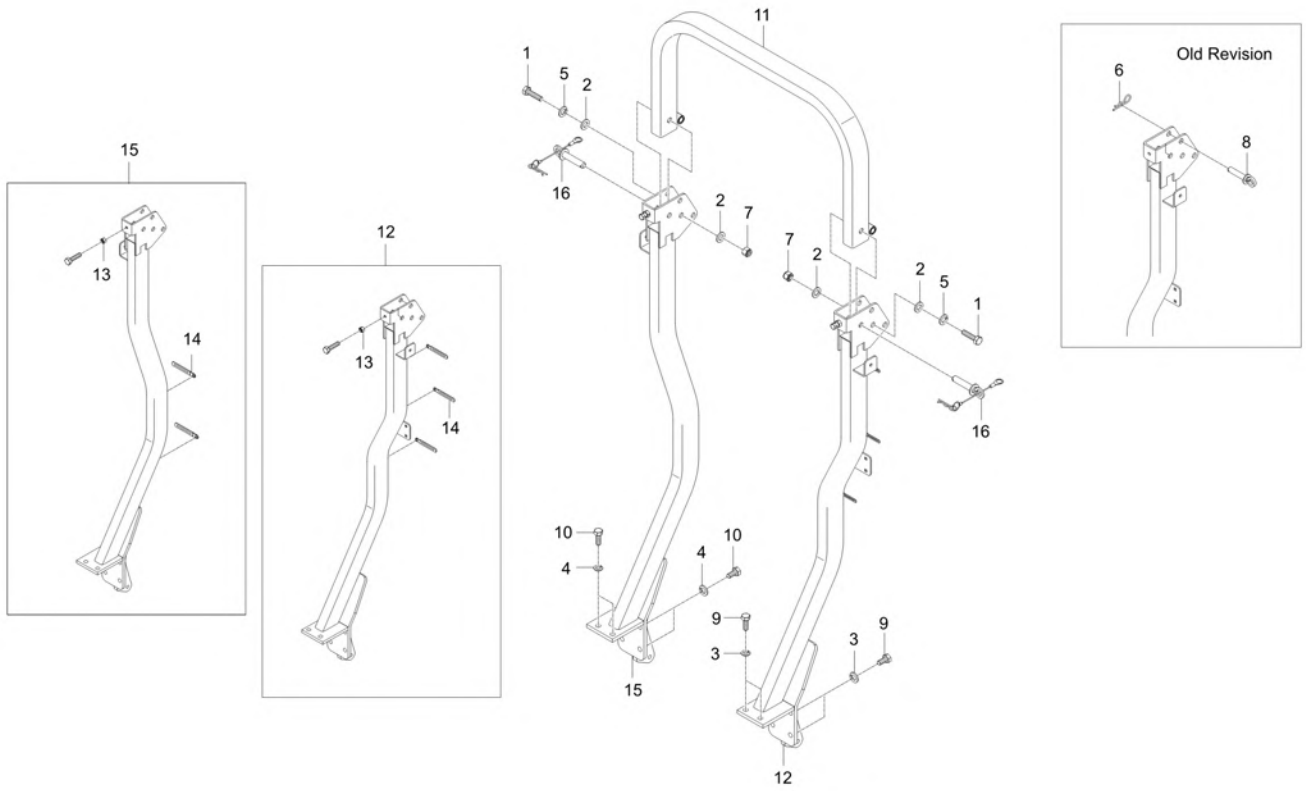

A : CK3510SEB

No.	Part Number	Description	Qty A	Qty B	Qty C	Qty D	Qty E	I.C	Remark
1	01173-51690	BOLT	4 VJJ700017 ~ VJJ700016						
1	01173-51690	BOLT	2					<--O-->	
2	04011-50160	PLAIN WASHER	8 VJJ700017 ~ VJJ700016						M16
2	04011-50160	PLAIN WASHER	4					<--O-->	M16
3	04512-50140	SPRING WASHER	6						
4	04512-50140	SPRING WASHER	6						
5	04512-50160	WASHER, SPRING	4 VJJ700017 ~ VJJ700016						M16
5	04512-50160	WASHER, SPRING	2					<--O-->	M16
6	05515-51600	PIN, SNAP	2						
7	T2181-97191	SELF LOCK NUT(M16)	4 VJJ700017 ~ VJJ700016						
7	T2181-97191	SELF LOCK NUT(M16)	2					<--O-->	
8	T2185-97153	PIN, SET B(ROPS)	2						
9	T2230-85242	BOLT	6						M14*2.0*32
10	T2230-85242	BOLT	6						M14*2.0*32
11	TC26-1493A	ASSY ROPS	1 TJJ700001 ~ WJJ700032						
11	TC26-1493B	ASSY ROPS	1 WJJ700033 ~ WJJ700036					<----->	
12	TC26-1451A	SUPPORT,LH	1						
13	02114-50120	NUT	2						M12*P1.75

----> Old replace New
<---- New replace Old
<-X-> Not interchangeable
<---> Interchangeable
<-O-> Interchangeable with another part(s)
* Please place an order assy(*)

https://tractormanualz.com/

TC2-G631006 ROPS BAR GROUP(TELESCOPIC CHECK LINK)

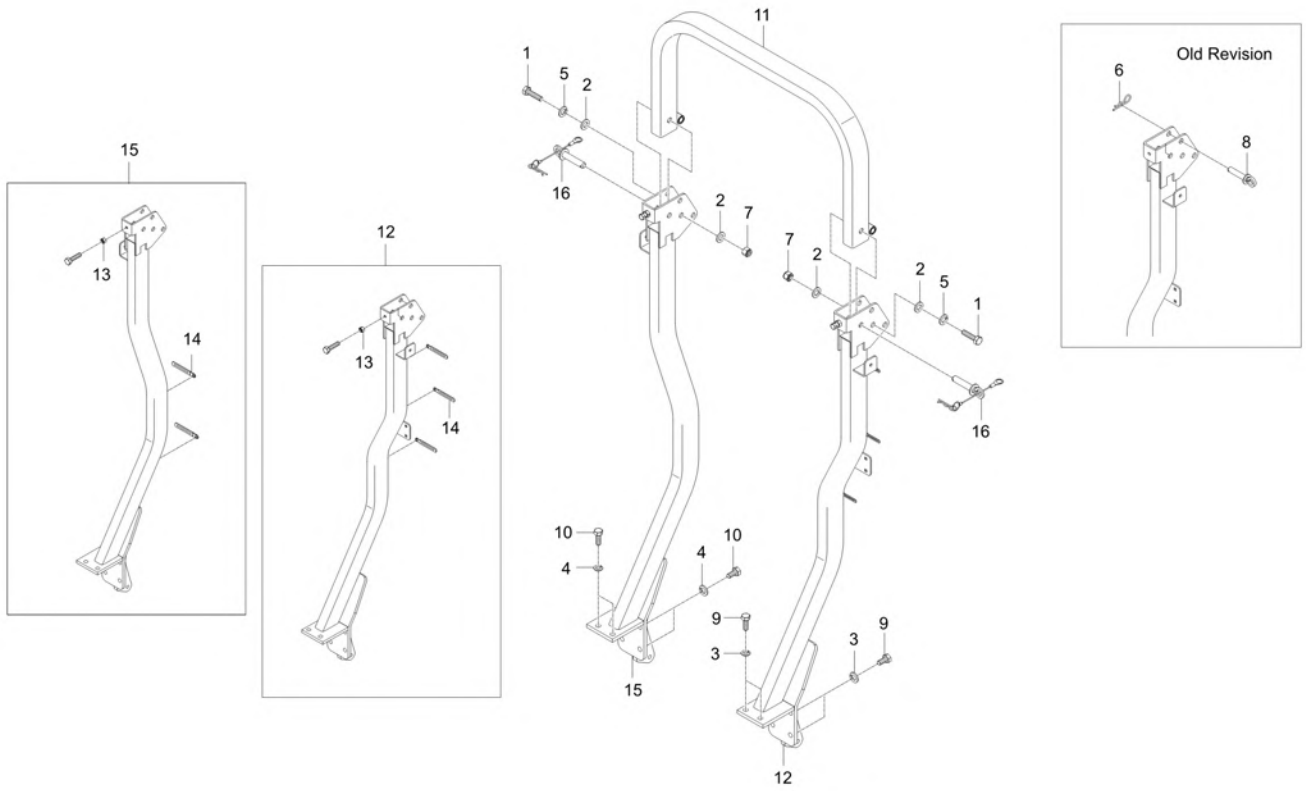

A : CK3510SEB

No.	Part Number	Description	Qty A	Qty B	Qty C	Qty D	Qty E	I.C	Remark
14	37150-1232-1	CLAMP, WIRE	3						60*10
15	TC26-1452A	TRK - SUPPORT, RH	1						
16	TC26-1717B	PIN, ROPS FIXING	2						-

----> Old replace New <---- New replace Old <-X-> Not interchangeable
<---> Interchangeable <-O-> Interchangeable with another part(s)
* Please place an order assy(*)

https://tractormanualz.com/

TC2-G633027 STEP SEAT FRAME GROUP(MEC)

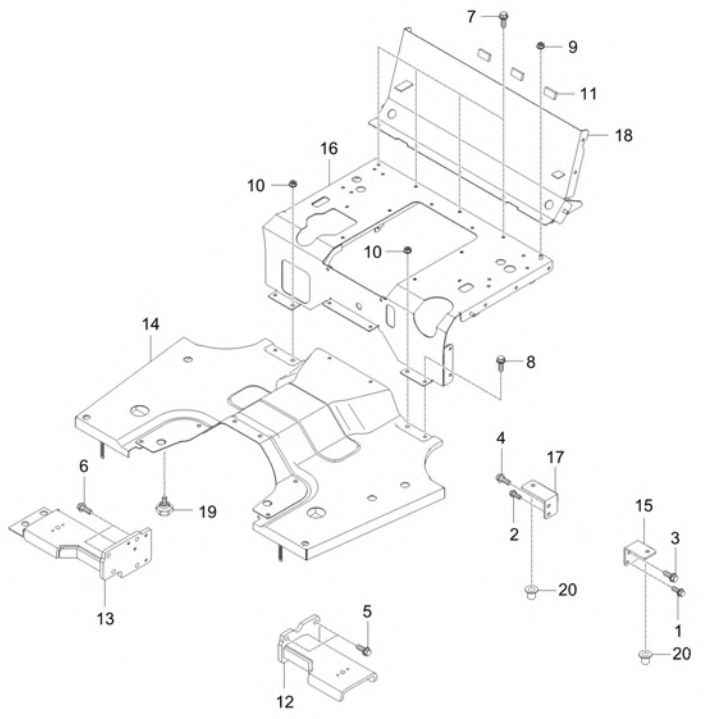

A : CK3510SEB

No.	Part Number	Description	Qty A	Qty B	Qty C	Qty D	Qty E	I.C	Remark
1	01123-50816	Hex Head Cap Screw	1						M8XP1.25
2	01123-50816	Hex Head Cap Screw	1						M8XP1.25
3	01133-51020	BOLT	1						M10XP1.25
4	01133-51020	BOLT	1						M10XP1.25
5	01133-51230	WASHER BOLT	4						M12*P1.25
6	01133-51230	WASHER BOLT	4						M12*P1.25
7	01754-50816	BOLT, FLANGE	4						M8XP1.25
8	01754-50816	BOLT, FLANGE	4						M8XP1.25
9	02763-50080	FLANGE NUT	1						M8XP1.25
10	02771-50100	NUT	2						M10*1.25
11	TC26-0001A	SPONGE	3						저발포 PU 폼
12	TC26-0704C	SUPPORT, STEP-LH FR	1						
13	TC26-0706B	SUPPORT, STEP-RH FR	1						
14	TC26-0708C	ASSY FLOOR-MEC dnr v	1 UJJ700001 ~ TJJ700002						
14	TC26-1551A	ASSY FLOOR- SHUTTLE	1 TJJ700003 ~ VJJ700088					<------	
14	TC26-1551AOE	ASSY FLOOR-SHUTTLE	1					<------	
15	TC26-0716A	SUPPORT, STEP-MID LH	1						
16	TC26-0722D	PLATE, SEAT FLOOR-MEC dnr v	1 UJJ700001 ~ TJJ700030						

----> Old replace New <---- New replace Old <-X-> Not interchangeable
<---> Interchangeable <-O-> Interchangeable with another part(s)
* Please place an order assy(*)

https://tractormanualz.com/

TC2-G633027 STEP SEAT FRAME GROUP(MEC)

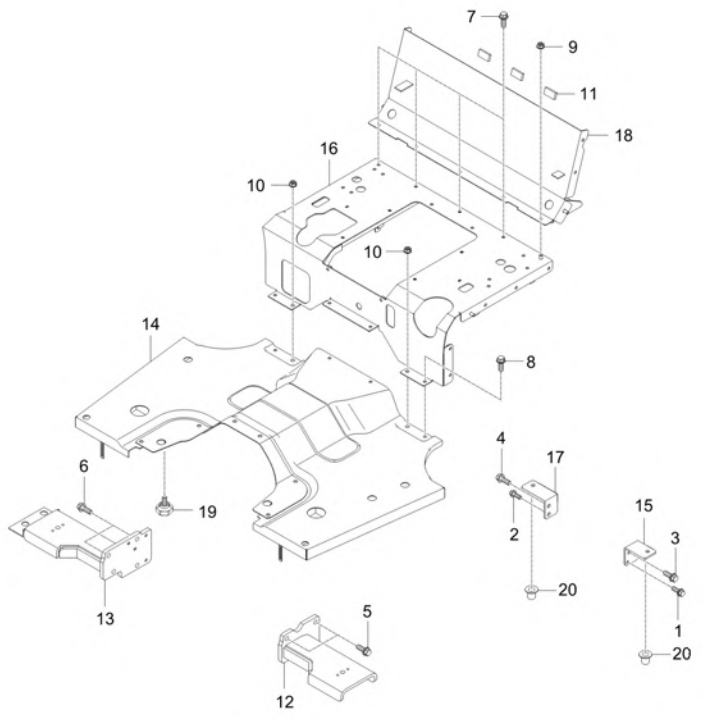

A : CK3510SEB

No.	Part Number	Description	Qty A	Qty B	Qty C	Qty D	Qty E	I.C	Remark
16	TC26-0722E	PLATE, SEAT FLOOR-MEC	1 TJJ700031 ~ WJJ700036					<------	
17	TC26-0798A	SUPPORT, STEP-MID RH	1						
18	TC26-1348A	PLATE, SEAT FLOOR-RR	1						
19	T5710-51951	STOPPER	2						N
20	32210-2758-1	PLUG	2						M12

----> Old replace New
<---- New replace Old
<-X-> Not interchangeable
<---> Interchangeable
<-O-> Interchangeable with another part(s)
* Please place an order assy(*)

https://tractormanualz.com/

TC2-G635008 FENDER(ROPS) GROUP(IND.PTO)

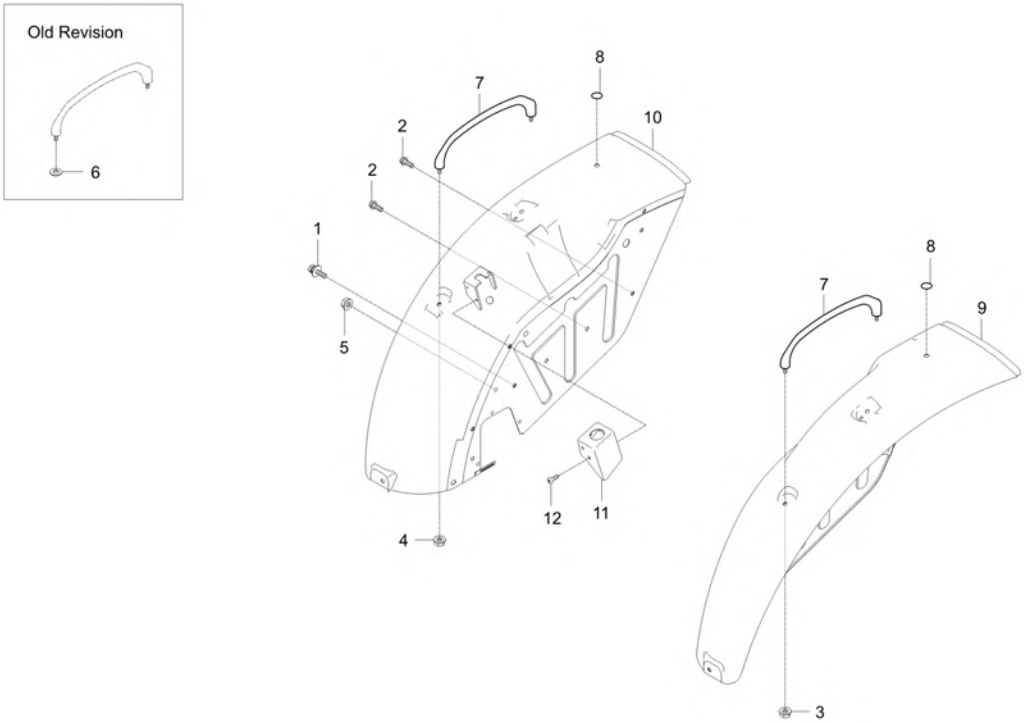

A : CK3510SEB

No.	Part Number	Description	Qty A	Qty B	Qty C	Qty D	Qty E	I.C	Remark
1	01127-50820	BOLT	2						
2	01754-50816	BOLT, FLANGE	18						M8XP1.25
3	02763-50080	FLANGE NUT	2						M8XP1.25
4	02763-50080	FLANGE NUT	2						M8XP1.25
5	02763-50080	FLANGE NUT	4						M8XP1.25
6	T2610-95081	PLATE,RUBBER	4						T1.0
7	T2630-95052	GRIP	2						
8	T4260-87511	HOLE COVER	2						
9	TC26-1064A	FENDER LH dnr v	1						
9	TC26-1064B	FENDER LH v	1 TJJ700003 ~ VJJ700088					<----->	
9	TC26-1064BOE	FENDER-LH	1					<------	
10	TC26-1352A	FENDER RH dnr v	1						
10	TC26-1352B	FENDER-RH (IND.PTO)	1					<------	
10	TC26-1352C	FENDER-RH (IND.PTO)	1 TJJ700003 ~ UJJ700136					<------	
10	TC26-1352D	FENDER RH dnr v	1 UJJ700137 ~ VJJ700088					<------	
10	TC26-1352DOE	FENDER RH v	1					<------	
11	TC26-1358A	COVER, PTO SWITCH dnr v	1						
11	TC26-1358B	COVER, PTO SWITCH v	1 TJJ700003 ~ WJJ700036					<------	

----> Old replace New <---- New replace Old <-X-> Not interchangeable
<---> Interchangeable <-O-> Interchangeable with another part(s)
* Please place an order assy(*)

https://tractormanualz.com/

TC2-G635008 **FENDER(ROPS) GROUP(IND.PTO)**

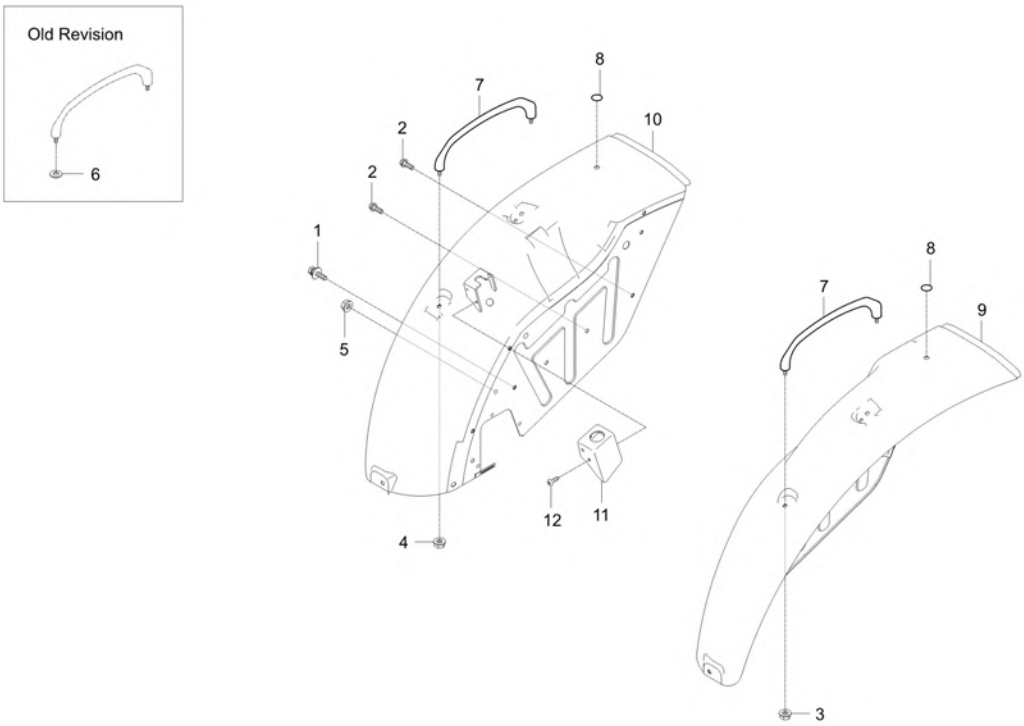

A : CK3510SEB

No.	Part Number	Description	Qty A	Qty B	Qty C	Qty D	Qty E	I.C	Remark
12	U3215-81552	Screw Black v	3						M6

----> Old replace New <---- New replace Old <-X-> Not interchangeable
<---> Interchangeable <-O-> Interchangeable with another part(s)
* Please place an order assy(*)

https://tractormanualz.com/

TC2-G644001

SHUTTLE LEVER GROUP

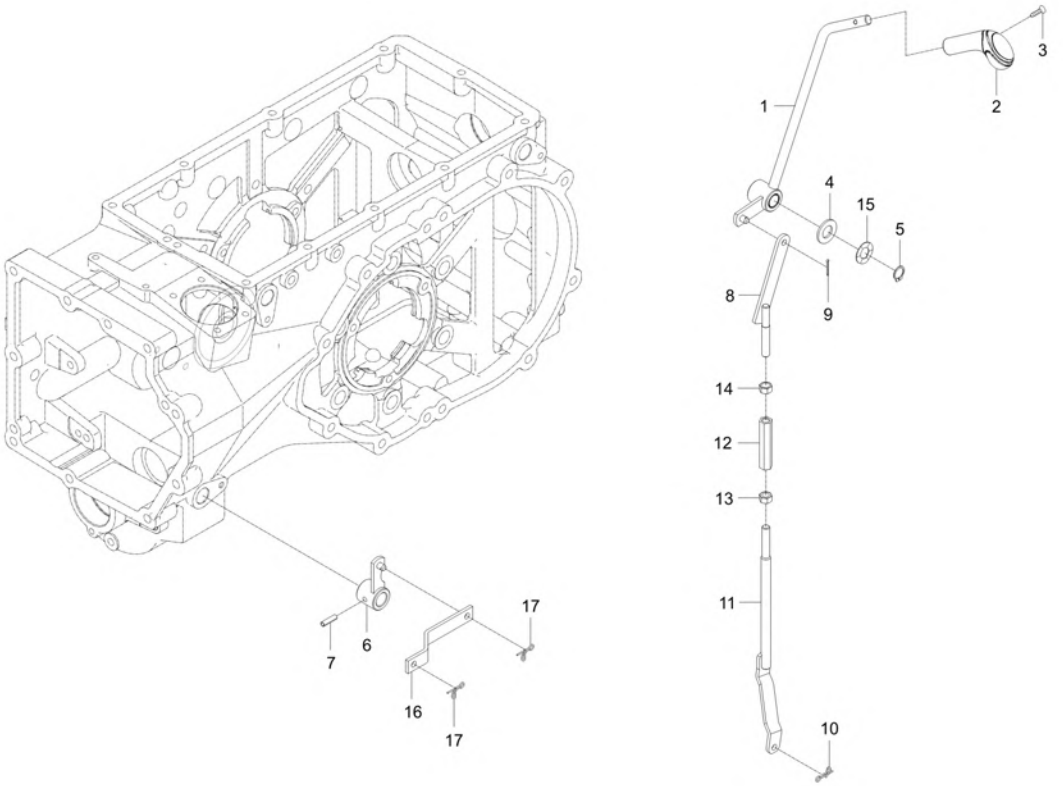

A : CK3510SEB

No.	Part Number	Description	Qty A	Qty B	Qty C	Qty D	Qty E	I.C	Remark
1	TC26-1384B	LEVER, SHUTTLE-US	1						-
2	T5750-80251	GRIP	1						-
3	03024-50514	BOLT,SCREW	1						
4	04013-50160	WASHER, PLAIN	1						M16
5	04612-00160	SNAP RING v	1						
6	TC26-1539A	ARM, CONNETING	1						-
7	05411-00635	PIN, SPRING	1						DIA5*36
8	TC26-1472A	ROD, SHUTTLE-UPR	1						
9	05511-50218	PIN, SPLIT	1						DIA2*18
10	52300-3412-1	SNAP PIN	1						DIA1.6
11	TC26-1546A	ROD, SHUTTLE-LWR (ROPS)	1						
12	55311-3156-1	TURNBUCKLE	1						HEX14*75
13	55311-3155-1	NUT	1						
14	02176-50100	NUT v	1						M10XP1.25
15	TC26-1438A	WASHER, PLATE SPRING	1						T0.3
16	TC26-1541A	ROD, SHUTTLE-EXT	1						19XT4.5 평철
17	52300-3412-1	SNAP PIN	2						DIA1.6

----> Old replace New <---- New replace Old <-X-> Not interchangeable
<---> Interchangeable <-O-> Interchangeable with another part(s)
* Please place an order assy(*)

https://tractormanualz.com/

TC2-G652012 INSTRUMENT PANEL FRAME GROUP(ROPS SHUTTL

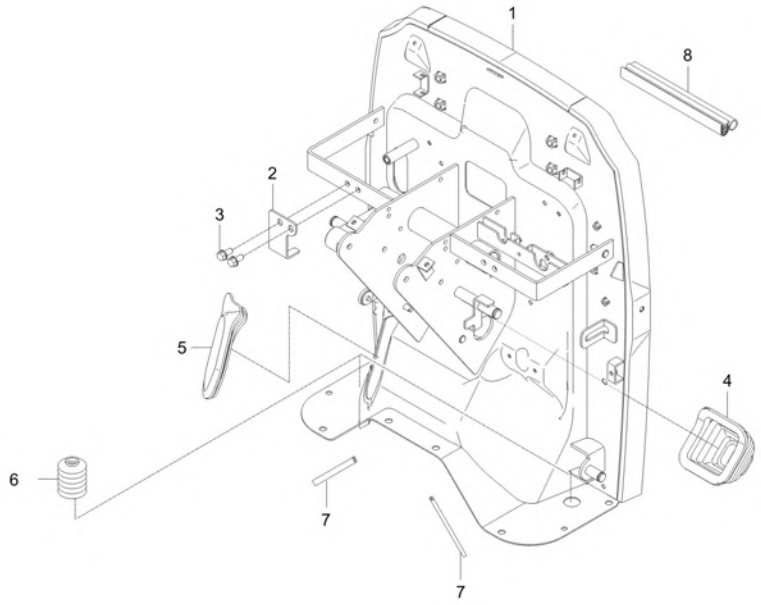

A : CK3510SEB

No.	Part Number	Description	Qty A	Qty B	Qty C	Qty D	Qty E	I.C	Remark
1	TC26-1373A	ASSY FRAME, INSTPN-ROPS SHUTTLE	1						
1	TC26-1373B	ASSY FRAME, INSTPN-ROPS SHUTTLE	1					<------	
1	TC26-1373C	ASSY FRAME, INSTPN-ROPS SHUTTLE	1					<----->	
2	T5710-80782	PLATE, SWITCH	1						T3.0
3	01754-50816	BOLT, FLANGE	2						M8XP1.25
4	T5715-80681	BOOT	1						T1.2
5	TC26-1362A	COVER, FRAME RUBBER-1	1						T3.0
6	T4620-55821	JABARA	2						
7	T5620-50291	U-SHAPED RUBBER	2						
8	T5710-80651	RUBBER	1						N

----> Old replace New
<----> Interchangeable
* Please place an order assy(*)
<---- New replace Old
<-O-> Interchangeable with another part(s)
<-X-> Not interchangeable

https://tractormanualz.com/

TC2-G661023

SEAT GROUP

(CK3510SEB : VJJ700017 ~)

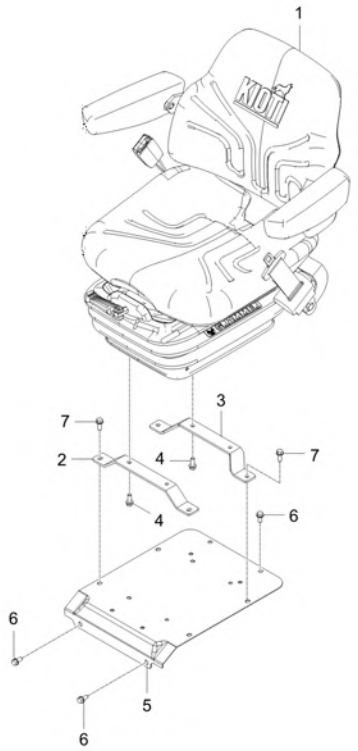

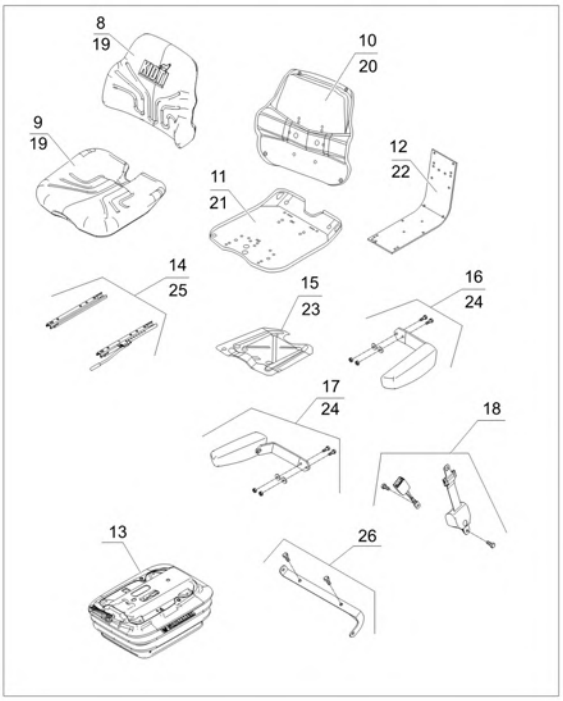

A : CK3510SEB

No.	Part Number	Description	Qty A	Qty B	Qty C	Qty D	Qty E	I.C	Remark
1	TC26-1720A	ASSY SEAT-US	1						
1	TC26-1720B	ASSY SEAT-US	1					<------	
1	TC26-1720C	ASSY SEAT-US	1					<------	
2	TC26-1736A	BRACKET, SEAT MOUNTING - FRONT	1 VJJ700017 ~ VJJ700088						T4.5
2	TC26-1736B	BRACKET, SEAT MOUNTIN - FRONT	1 VJJ700089 ~ WJJ700036					<------	T4.5
3	TC26-1737A	BRAKET, SEAT MOUNTING - REAR	1 VJJ700017 ~ VJJ700088						T4.5
3	TC26-1737B	BRACKET, SEAT MOUNTING - REAR	1 VJJ700089 ~ WJJ700036					<------	T4.5
4	01754-50820	BOLT, FLANGE	4						M8XP1.25
5	TC26-0538A	PLATE, SEAT FLOOR	1						-
5	TC26-0538B	PLATE, SEAT FLOOR	1					<----->	-
6	01754-50816	BOLT, FLANGE	4						M8XP1.25
7	01754-50820	BOLT, FLANGE	4						M8XP1.25
8	TC26-1769A	CUSHION, BACK-CPL	1						
8	TC26-1769B	CUSHION, BACK-CPL	1					<------	
9	TC26-1772A	CUSHION-SEAT CPL	1						
10	TC26-1773A	SEAT, BACK-CPL	1						
11	TC26-1774A	SEAT-PAN CPL	1						
11	TC26-1774B	SEAT-PAN CPL	1					<------	

----> Old replace New
<---- New replace Old
<-X-> Not interchangeable
<---> Interchangeable
<-O-> Interchangeable with another part(s)
* Please place an order assy(*)

https://tractormanualz.com/

TC2-G661023

SEAT GROUP

(CK3510SEB : VJJ700017 ~)

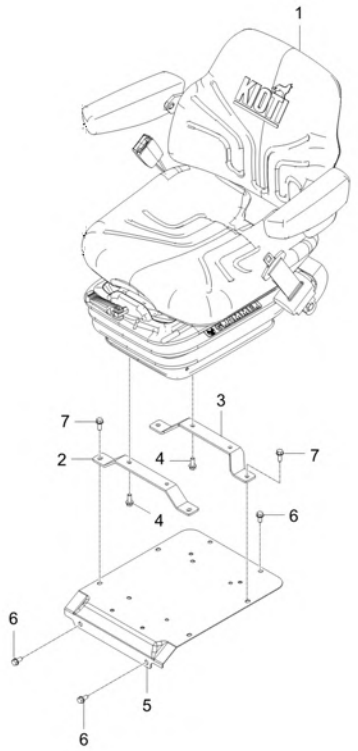

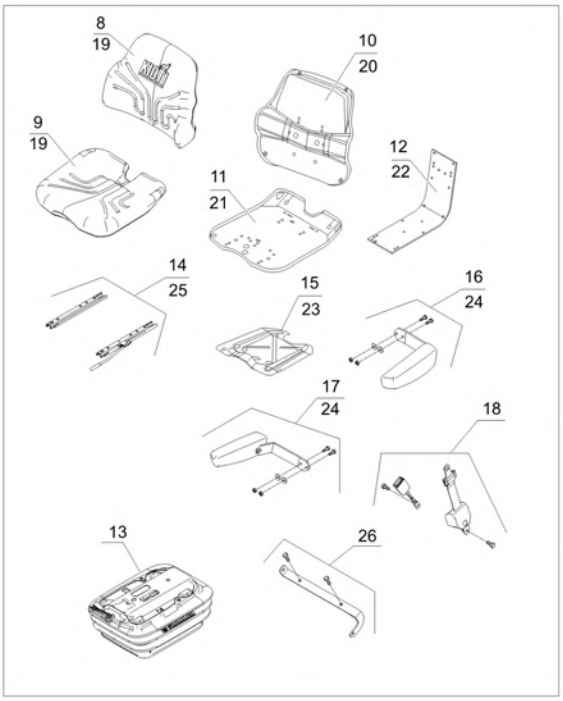

A : CK3510SEB

No.	Part Number	Description	Qty A	Qty B	Qty C	Qty D	Qty E	I.C	Remark
12	TC26-1775A	SEAT, BACK-CPL	1						
13	TC26-1778A	SUSPENSION-MSG283 CPL	1						
14	TC26-1780A	RAIL, SLIDE-CPL	1						
15	TC26-1781A	SWITCH-SEAT CPL	1						
16	TC26-1782A	ARMREST-RH CPL	1						
17	TC26-1783A	ARMREST-LH CPL	1						
18	TC26-1784A	BELT, SEAT-CPL	1						
19	TC26-1786A	FASTENER-BACKREST CUSHION CPL	1						
20	TC26-1787A	FASTENER-BACKREST CPL	1						
21	TC26-1788A	FASTENER-SEAT PAN CPL	1						
22	TC26-1789A	FASTENER-BACKREST CPL	1						
23	TC26-1790A	FASTENER-SEAT SWITCH CPL	1						
24	TC26-1791A	FASTENER-ARMREST CPL	1						
25	TC26-1792A	FASTENER-SLIDE RAIL CPL	1						
26	TD26-1146A	BRACKET,BELT-SEAT CPL	1						

----> Old replace New
<----> Interchangeable
* Please place an order assy(*)
<---- New replace Old
<-O-> Interchangeable with another part(s)
<-X-> Not interchangeable

https://tractormanualz.com/

TC2-G611010

AIR CLEANER GROUP

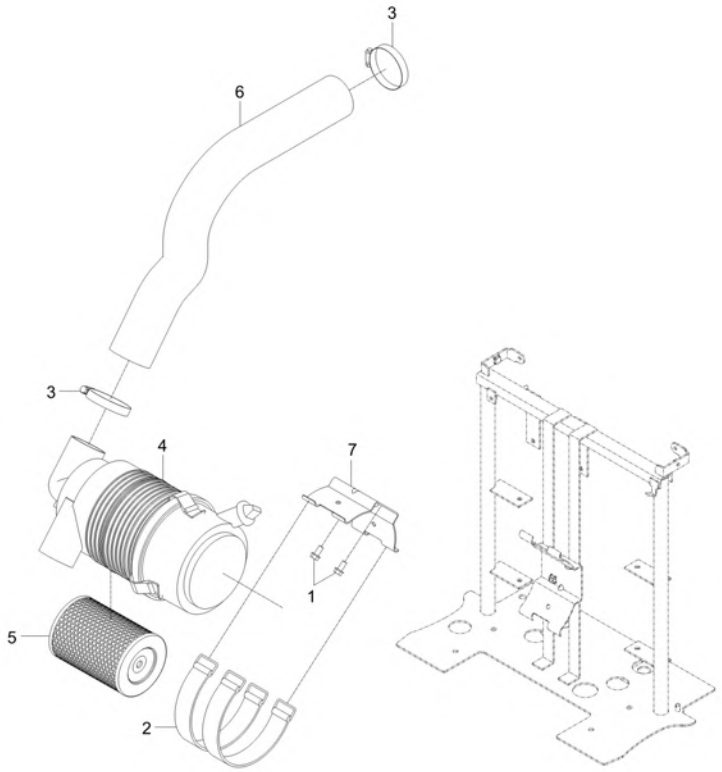

A : CK3510SEB

No.	Part Number	Description	Qty A	Qty B	Qty C	Qty D	Qty E	I.C	Remark
1	01754-50816	BOLT, FLANGE	2						M8XP1.25
2	38325-1398-1	BAND,AIR CLEANER	2						
3	KX97382-S51	ASSY, CLAMP v	2						DIA70스탠 76#
4	T2198-11012	AIR CLEANER ASSY	1						
5	E7230-11081	ELEMENT, FILTER ASSY 1 sp dnr v	1						
6	TC26-0414A	HOSE, SUCTION	1						OD75 / ID63
7	TC26-0447A	BRACKET, AIR CLEANER HOLDER	1						T2.3

----> Old replace New <---- New replace Old <-X-> Not interchangeable
<---> Interchangeable <-O-> Interchangeable with another part(s)
* Please place an order assy(*)

https://tractormanualz.com/

TC2-G612006

MUFFLER GROUP

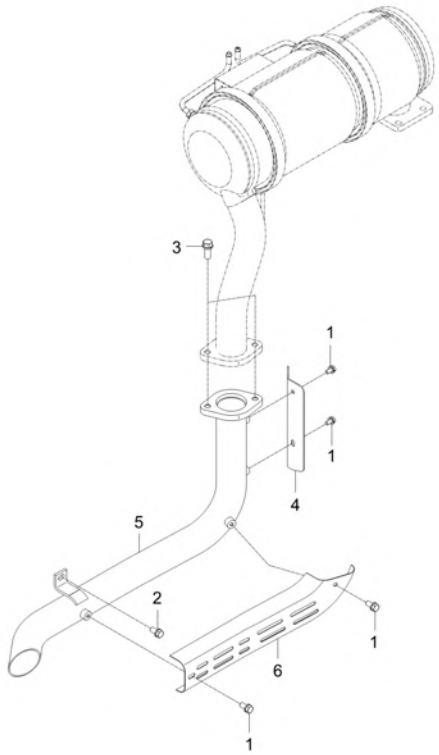

A : CK3510SEB

No.	Part Number	Description	Qty A	Qty B	Qty C	Qty D	Qty E	I.C	Remark
1	01025-50612	WASHER BOLT	4						M6P1.0
2	01025-50612	WASHER BOLT	1						M6P1.0
3	01133-51030	WITH WASHER BOLT	2						M10XP1.25
4	T5710-50263	PROTECTION COVER	1						T2.0
4	T5710-50264	PROTECTION COVER,RR	1					<------	T2.0
5	T5855-50222	PIPE,EXHAUST	1						N
6	T5855-50251	PROTECTION COVER,FR	1						T1.2
6	T5855-50252	PROTECTION COVER,FR	1					<----->	T1.2

----> Old replace New
<----> Interchangeable
* Please place an order assy(*)
<---- New replace Old
<-O-> Interchangeable with another part(s)
<-X-> Not interchangeable

https://tractormanualz.com/

TC2-G612601

DUSTPROOF NET GROUP

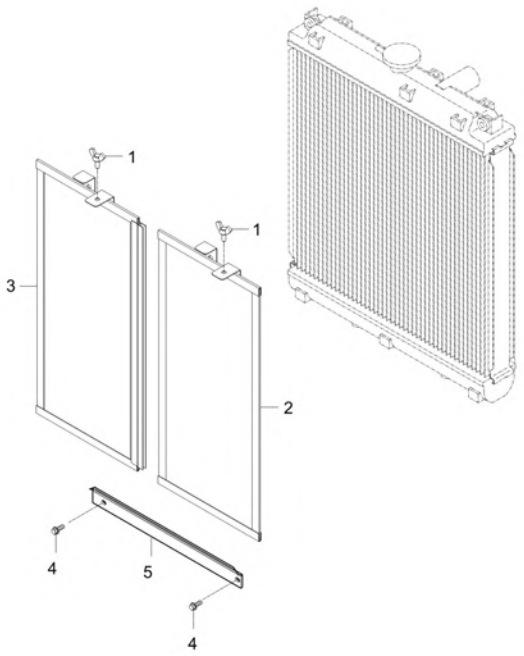

A : CK3510SEB

No.	Part Number	Description	Qty A	Qty B	Qty C	Qty D	Qty E	I.C	Remark
1	01811-50615	BOLT,WING	2						
2	TC26-0418B	NET, RADIATOR-LH	1						
3	TC26-0419B	NET, RADIATOR-RH	1						
4	01754-50612	BOLT, FLANGE	2						M6*1.0
5	TC26-1439A	BRACKET, GUIDE	1						T1.2

----> Old replace New
<----> Interchangeable
* Please place an order assy(*)
<---- New replace Old
<-O-> Interchangeable with another part(s)
<-X-> Not interchangeable

https://tractormanualz.com/

TC2-G612701 COOLANT RESERVIOR GROUP

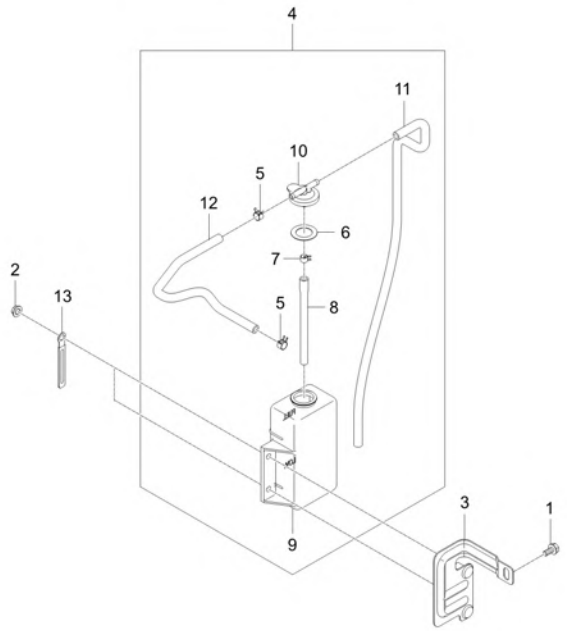

A : CK3510SEB

No.	Part Number	Description	Qty A	Qty B	Qty C	Qty D	Qty E	I.C	Remark
1	01754-50614	FLANGE BOLT	1						
2	02763-50080	FLANGE NUT	2						M8XP1.25
3	T5855-50532	BRACKET	1 ~ VJJ700008						N
3	TC26-1624A	BRACKET	1 VJJ700009 ~ VJJ700032					<----->	-
3	TC26-1615A	BRACKET	1 VJJ700033 ~ WJJ700036					<----->	-
4	TC26-0421B	ASSY RESERVOIR, RADIATOR	1						
5	14911-4275-1	CLIP, TUBE	2						T0.8*#12
6	15532-7243-2	PACKING	1						-
7	54821-3818-2	CLIP, TUBE	1						
8	T2350-13602006	HOSE v	1						-
9	T2350-13612	TANK, WATER	1						
10	T5525-50721	CAP v	1						
11	T5855-50521002	HOSE, OVER FLOW-1	1						L=750
12	TC26-0651B	HOSE, COOLING WATER AUTO RETURN obs v	1						L=800 400
13	37150-3447-1	WIR'G CLAMP	1						T0.5

----> Old replace New <---- New replace Old <-X-> Not interchangeable
<---> Interchangeable <-O-> Interchangeable with another part(s)
* Please place an order assy(*)

https://tractormanualz.com/

TC2-G614505 **FUEL COOLER GROUP(TC220 STAGE5)**

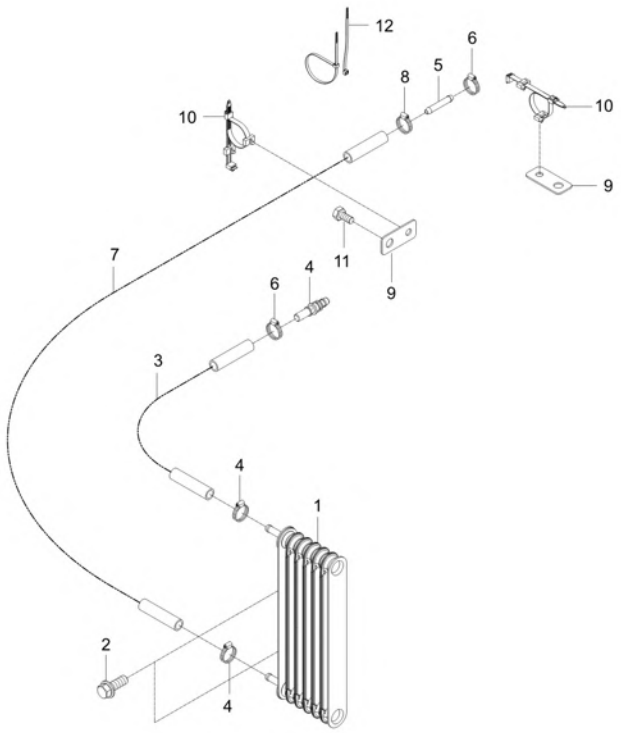

A : CK3510SEB

No.	Part Number	Description	Qty A	Qty B	Qty C	Qty D	Qty E	I.C	Remark
1	T5315-81251	FUEL COOLER	1						
2	01754-50820	BOLT, FLANGE	2						M8XP1.25
3	TC26-0423A	FUEL, HOSE	1						OD12.8 / ID7
4	15301-7247-0	CLIP, HOSE	2						스탠16#
5	T5855-55261	TUBE, CONNECTING	1						0.8T
6	15301-7247-0	CLIP, HOSE	1						스탠16#
7	T5270-55252	HOSE 2, FUEL	1						
8	15301-7247-0	CLIP, HOSE	1						스탠16#
9	T2185-69771	BRACKET WIRE HARNESS	2						T1.6
10	P5370-82551	BAND, CABLE	2						
11	01754-50812	BOLT, FLANGE	1						M8XP1.25
12	T2185-82561	BAND, CORD v	1						L200

----> Old replace New <---- New replace Old <-X-> Not interchangeable
<---> Interchangeable <-O-> Interchangeable with another part(s)
* Please place an order assy(*)

https://tractormanualz.com/

TC2-G617002

BATTERY FIXING GROUP

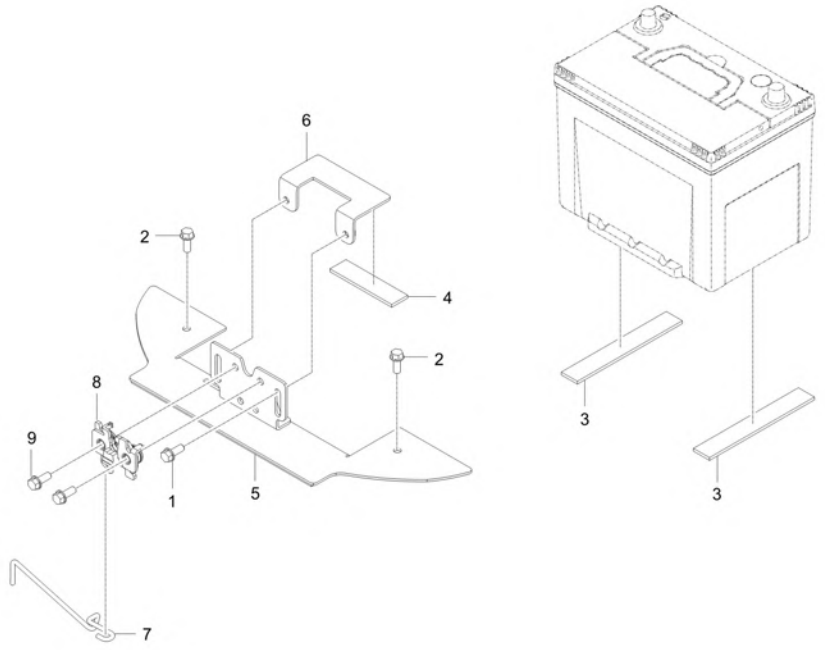

A : CK3510SEB

No.	Part Number	Description	Qty A	Qty B	Qty C	Qty D	Qty E	I.C	Remark
1	01125-50820	BOLT, WASHER	2						M8XP1.25
2	T2185-70491	BOLT	2						
3	T2610-50271	RUBBER, CUSHION v	2						
4	T4157-50271	RUBBER, CUSHION	1						
5	T5855-52014	BRACKET	1						-
6	T5855-52021	BRACKET	1						
7	T5855-52032	ROD	1						DIA 5
7	T5855-52033	LATCH, ROD	1					<------	DIA 5
8	T4145-60582	LATCH ASSY	1						
9	01754-50820	BOLT, FLANGE	2						M8XP1.25

----> Old replace New
<---- New replace Old
<-X-> Not interchangeable
<---> Interchangeable
<-O-> Interchangeable with another part(s)
* Please place an order assy(*)

https://tractormanualz.com/

TC2-G617201

ECU BRACKET GROUP

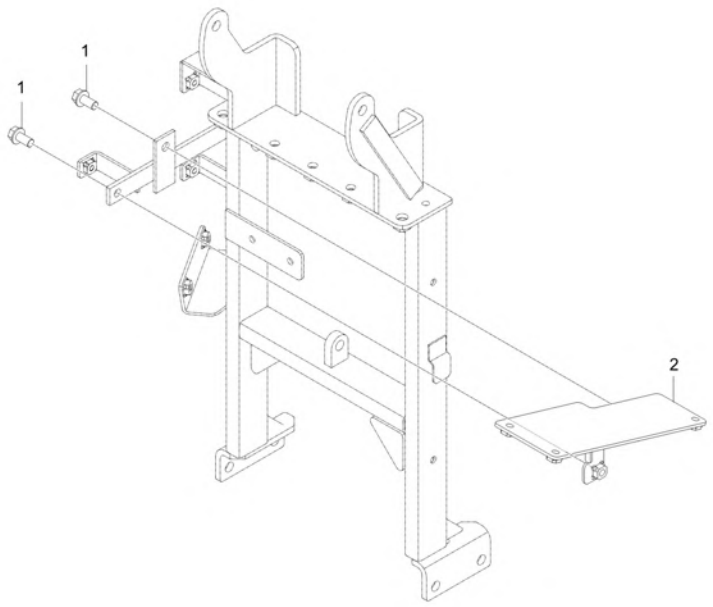

A : CK3510SEB

No.	Part Number	Description	Qty A	Qty B	Qty C	Qty D	Qty E	I.C	Remark
1	01754-50816	BOLT, FLANGE	2						M8XP1.25
2	TC26-0443A	BRACKET, ECU	1						
2	TC26-0443B	BRACKET, ECU	1					<--O-->	

----> Old replace New
<----> Interchangeable
* Please place an order assy(*)
<---- New replace Old
<-O-> Interchangeable with another part(s)
<-X-> Not interchangeable

https://tractormanualz.com/

TC2-G621003

FRONT AXLE FRAME GROUP

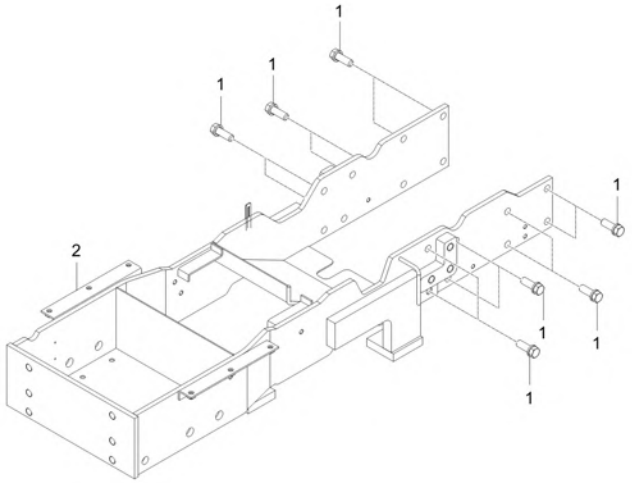

A : CK3510SEB

No.	Part Number	Description	Qty A	Qty B	Qty C	Qty D	Qty E	I.C	Remark
1	01177-51235	BOLT v	16						M12XP1.25 (9T/스프
2	TC26-0425D	FRAME, FRONT AXLE v	1						
2	TC26-0425E	FRAME, FRONT AXLE	1					<----->	

----> Old replace New
<---- New replace Old
<-X-> Not interchangeable
<---> Interchangeable
<-O-> Interchangeable with another part(s)
* Please place an order assy(*)

https://tractormanualz.com/

TC2-G642003

JOYSTICK LEVER GROUP

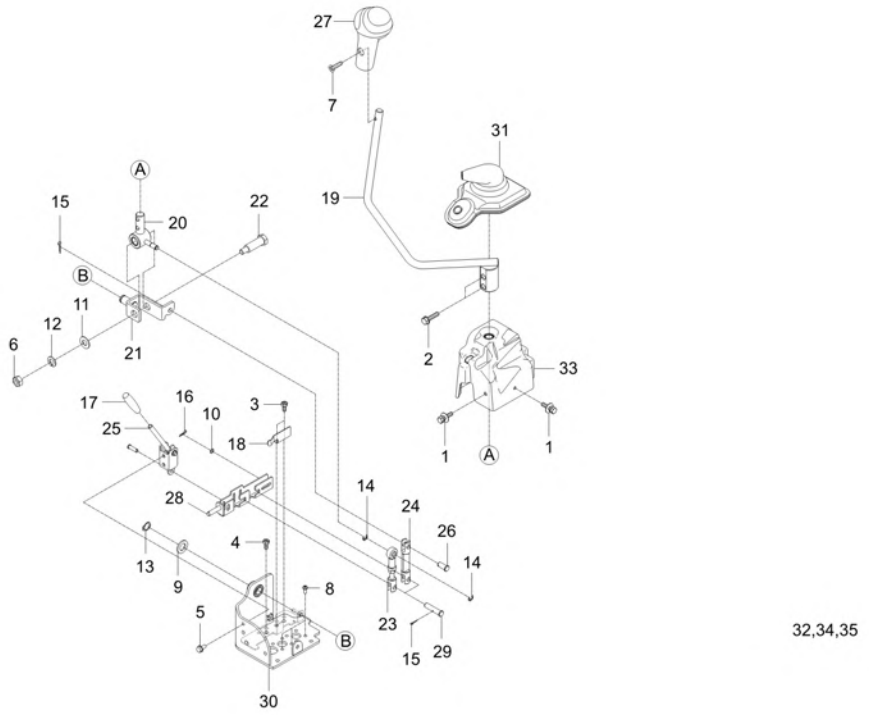

A : CK3510SEB

No.	Part Number	Description	Qty A	Qty B	Qty C	Qty D	Qty E	I.C	Remark
1	01027-50614	BOLT	4						
2	01123-50830	BOLT, WASHER v	2						M8P1.25*30
3	01202-50620	BOLT	3						
4	01202-50620	BOLT	1						
5	01754-50612	BOLT, FLANGE	2						M6*1.0
6	02176-50100	NUT v	1						M10XP1.25
7	03016-50616	SCREW	1						M6XP1.0
8	03024-50512	BOLT,SCREW	8						M5XP0.8
9	04011-50140	WASHER, PLAIN	1						T2.6
10	04012-50060	PLAIN WASHER	2						M6
11	04013-50100	PLAIN WASHER	1						M10
12	04512-50100	SPRING WASHER	1						M10
13	04612-00150	CIR CLIP, EXTERNAL	1						DIA15
14	04613-50060	RING SNAP	2						
15	05511-50220	PIN, SPLIT	3						DIA1.8XL20
16	05525-50600	SNAP PIN	2						DIA6
17	T2660-71242	GRIP, DARK BLUE CK2610	1						
18	T2555-60741	PLATE SPRING, MOWER DECK	1						

----> Old replace New <---- New replace Old <-X-> Not interchangeable
<---> Interchangeable <-O-> Interchangeable with another part(s)
* Please place an order assy(*)

https://tractormanualz.com/

TC2-G642003

JOYSTICK LEVER GROUP

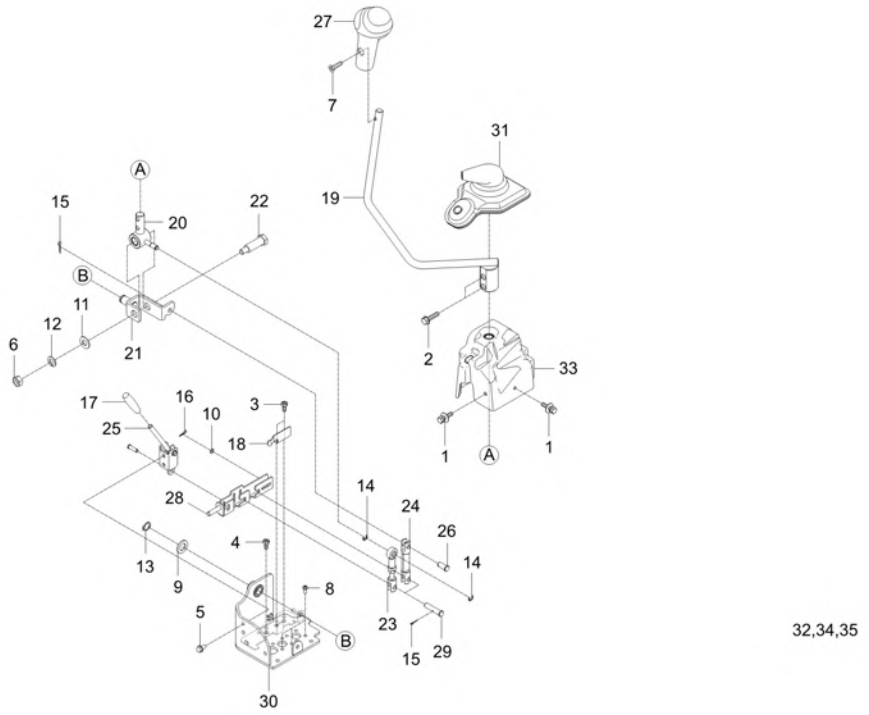

A : CK3510SEB

No.	Part Number	Description	Qty A	Qty B	Qty C	Qty D	Qty E	I.C	Remark
19	T5855-57805	LEVER,JOYSTICK	1						
20	T5855-57813	LEVER 1, JOYSTICK	1						-
21	T5855-57822	LEVER 2, JOYSTICK	1						-
22	T5855-57832	SHAFT,JOYSTICK	1						M10XP1.25
23	T5855-57842	ROD	1						N
24	T5855-57853	ROD2,JOYSTICK	1						
25	T5855-57866	LEVER3,JOYSTICK	1						
26	T5855-57901	DOWEL PIN	1						OD9XL20
27	T5855-57912	GRIP, JOYSTICK	1						-
28	TC26-0086A	BRACKET	1						
29	TC26-0095A	JOIN PIN	2						OD9XL40
30	TC26-1251A	BASE, SUPPORT	1						
31	TC26-0501C	BELLOWS, JOYSTICK	1						
32	T4157-56111	SPRING	1						
33	T5855-57882	BOOT, JOYSTICK	1						
34	T4930-66731	WASHER 1	1						
35	T4930-66751	WASHER 3	1						

----> Old replace New <---- New replace Old <-X-> Not interchangeable
<---> Interchangeable <-O-> Interchangeable with another part(s)
* Please place an order assy(*)

https://tractormanualz.com/

TC2-G645202

PARKING BRAKE LEVER GROUP

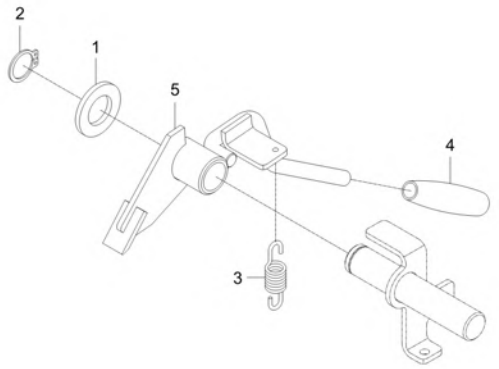

A : CK3510SEB

No.	Part Number	Description	Qty A	Qty B	Qty C	Qty D	Qty E	I.C	Remark
1	04011-50160	PLAIN WASHER	1						M16
2	04612-00160	SNAP RING v	1						DIA16
3	57781-5121-1	FRICTION SPRING	1						DIA1.2
3	T4157-51211	SPRING, RETURN	1					<------	
4	T2350-55922	GRIP	1						
5	T4620-55912	BRAKE PARKING v	1						-

----> Old replace New
<---- New replace Old
<-X-> Not interchangeable
<---> Interchangeable
<-O-> Interchangeable with another part(s)
* Please place an order assy(*)

https://tractormanualz.com/

TC2-G646604

BRAKE ROD GROUP

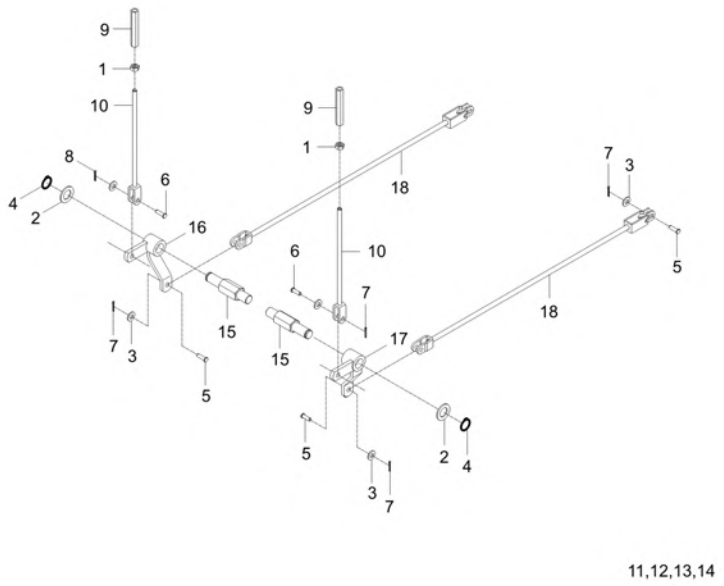

A : CK3510SEB

No.	Part Number	Description	Qty A	Qty B	Qty C	Qty D	Qty E	I.C	Remark
1	02176-50100	NUT v	2						M10XP1.25
2	04011-50200	WASHER, PLAIN	2						
3	04012-50080	WASHER, PLAIN	4						M8
4	04612-00200	Stop Ring	2						DIA20
5	05122-50828	PIN,JOINT	4						
6	05122-51028	PIN, JOINT v	2						DIA10
7	05511-50218	PIN, SPLIT	4						DIA2*18
8	05511-50318	PIN, SPLIT v	2						
9	32350-2898-4	TURNBUCKLE dnr v	2						HEX14
10	T2610-55751	ROD 1,BRAKE	2						
11	T4145-55791	CUSHION	4						
12	T4157-56111	SPRING	4						
13	T4157-56111	SPRING	2						
14	T4930-66731	WASHER 1	2						
15	TC26-0398A	SHAFT, BRAKE	2						HEX 27
16	TC26-0399A	LEVER, BRAKE-RH	1						-
17	TC26-0400A	LEVER, BRAKE-LH	1						-
18	TC26-0401A	ROD, BRAKE	2						

----> Old replace New
<----> Interchangeable
* Please place an order assy(*)
<---- New replace Old
<-O-> Interchangeable with another part(s)
<-X-> Not interchangeable

https://tractormanualz.com/

TC2-G648106

ACCELERATOR LEVER GROUP

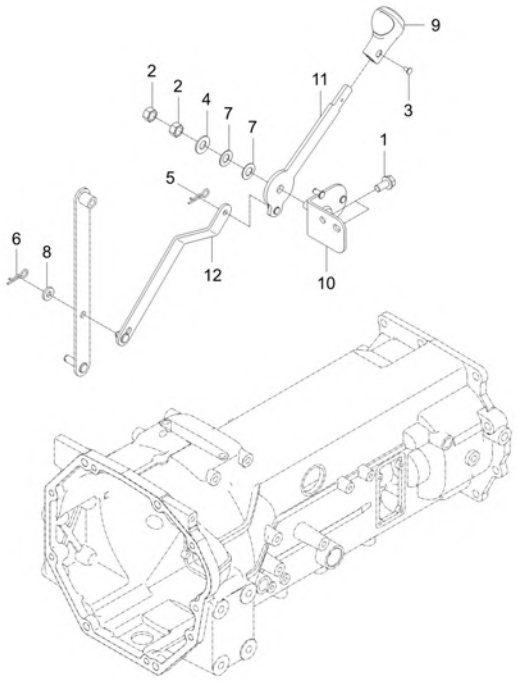

A : CK3510SEB

No.	Part Number	Description	Qty A	Qty B	Qty C	Qty D	Qty E	I.C	Remark
1	01754-50816	BOLT, FLANGE	2						M8XP1.25
2	02176-50100	NUT v	2						M10XP1.25
3	03056-50408	BOLT	1						M4XP0.7
4	04013-50100	PLAIN WASHER	1						M10
5	05525-50600	SNAP PIN	1						DIA6
6	52300-3412-1	SNAP PIN	1						DIA1.6
7	T4668-83301	SPRING	2						
8	T4930-66741	WASHER 2	1						
9	T5750-81091	GRIP, HAND ACCEL	1						-
10	T5710-81012	BRACKET, ACCEL	1						-
11	T5710-81031	LEVER, HAND ACCEL	1						N
12	T5710-81051	ACCEL ROD, 1	1						N

----> Old replace New
<----> Interchangeable
* Please place an order assy(*)
<---- New replace Old
<-O-> Interchangeable with another part(s)
<-X-> Not interchangeable

https://tractormanualz.com/

TC2-G663001

AUXLIARY STEP GROUP

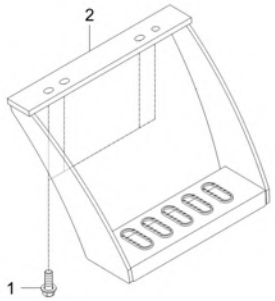

A : CK3510SEB

No.	Part Number	Description	Qty A	Qty B	Qty C	Qty D	Qty E	I.C	Remark
1	01135-51030	BOLT, WASHER	4						M10XP1.25
2	T5525-56631	STEP	1						-

----> Old replace New
<----> Interchangeable
* Please place an order assy(*)
<---- New replace Old
<-O-> Interchangeable with another part(s)
<-X-> Not interchangeable

https://tractormanualz.com/

TC2-G671501

FUEL TANK CAP GROUP

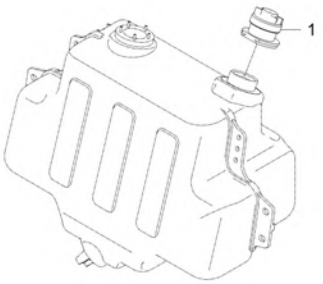

A : CK3510SEB

No.	Part Number	Description	Qty A	Qty B	Qty C	Qty D	Qty E	I.C	Remark
1	T2611-54825	ASSY, FUEL CAP v	1						

----> Old replace New
<---> Interchangeable
* Please place an order assy(*)
<---- New replace Old
<-O-> Interchangeable with another part(s)
<-X-> Not interchangeable

https://tractormanualz.com/

TC2-G681012 LOWER LINK GROUP(EXTENDABLE)

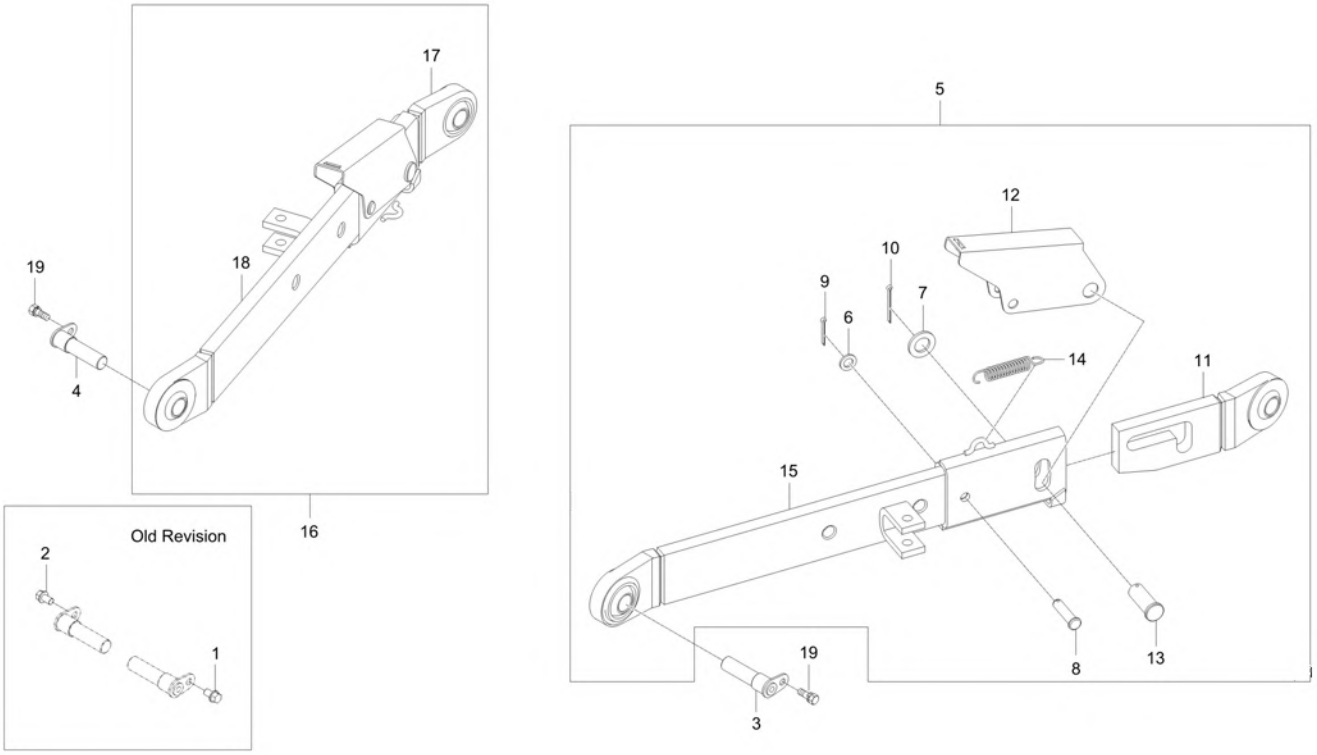

A : CK3510SEB

No.	Part Number	Description	Qty A	Qty B	Qty C	Qty D	Qty E	I.C	Remark
1	01123-50816	Hex Head Cap Screw	1						M8XP1.25
2	01123-50816	Hex Head Cap Screw	1						M8XP1.25
3	T2445-29822TP	PIN-LOWER LINK	1						
4	T2445-29822TP	PIN-LOWER LINK	1						
5	TC26-0394A	ASSY LINK, LOWER-LH	1						-
6	04011-50120	WASHER, PLAIN	1						M12
7	04011-50200	WASHER, PLAIN	1						
8	05122-51250	PIN, JOINT	1						
9	05511-50430	CARTER KEY v	1						
10	05511-50445	PIN, SPLIT	1						
11	T2615-93031	HOUSING, LOWER LINK(LH) v	1						
12	T4680-93041	COVER, LWR	1						T2.3
13	T4680-93061	PIN	1						
14	T4850-93051	SPRING	1						DIA2
15	TC26-0395A	BODY, LOWER LINK-LH	1						-
16	TC26-0396A	ASSY LINK, LOWER-RH	1						-
17	T2615-93131	HOUSHING, LOWER LINK (RH) dnr v	1						
18	TC26-0397A	ASSY LINK, LOWER-RH	1						-

----> Old replace New <---- New replace Old <-X-> Not interchangeable
<---> Interchangeable <-O-> Interchangeable with another part(s)
* Please place an order assy(*)

https://tractormanualz.com/

TC2-G681012

LOWER LINK GROUP(EXTENDABLE)

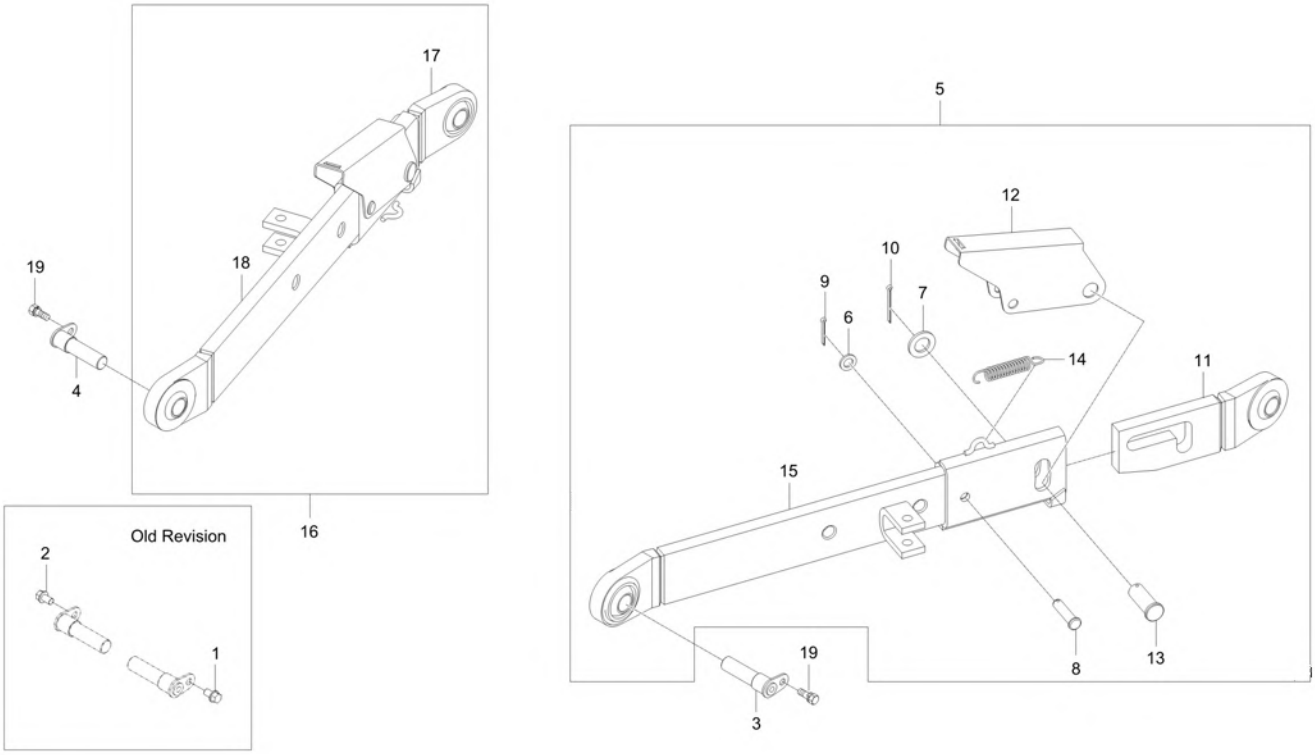

A : CK3510SEB

No.	Part Number	Description	Qty A	Qty B	Qty C	Qty D	Qty E	I.C	Remark
19	01123-50822	WASHER BOLT	2						M8XP1.25

----> Old replace New
<----> Interchangeable
* Please place an order assy(*)
<---- New replace Old
<-O-> Interchangeable with another part(s)
<-X-> Not interchangeable

https://tractormanualz.com/

TC2-G682011

CHECK LINK GROUP

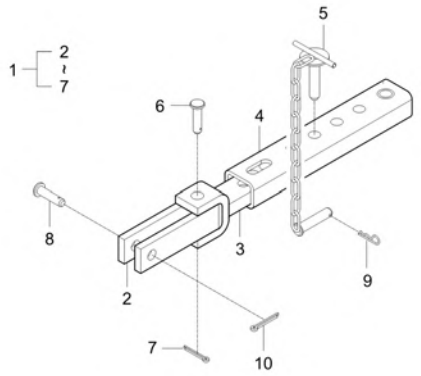

A : CK3510SEB

No.	Part Number	Description	Qty A	Qty B	Qty C	Qty D	Qty E	I.C	Remark
1	T2615-91118	ASSY, CHECK LINK -RUBBER dnr v	2 UJJ700001 ~ TJJ700002						
1	T2615-91119	ASSY,CHECK LINK	1 TJJ700003 ~ WJJ700036					<------	
2	T2615-91122	ASS'Y, 1 BRAKET dnr v	1						N
2	T2615-91123	ASSY, BRACKET v	1					<------	-
3	T2615-91133	ASSY 2 BRACKET v	1						
4	T2615-91143	ASSY,HOUSING	1						
5	T4125-91162	ASSY, HOLL	1						N
6	05122-51265	PIN,JOINT	1						DIA12*65
7	05525-51200	PIN,SNAP	1						
8	32353-7189-3TP	PIN, CHECK CHAIN	2						-
9	05525-51200	PIN,SNAP	2						
10	05511-50435	PIN, SPLIT	2						DIA4

----> Old replace New
<---> Interchangeable
* Please place an order assy(*)
<---- New replace Old
<-O-> Interchangeable with another part(s)
<-X-> Not interchangeable

https://tractormanualz.com/

TC2-G683003

TOP LINK GROUP

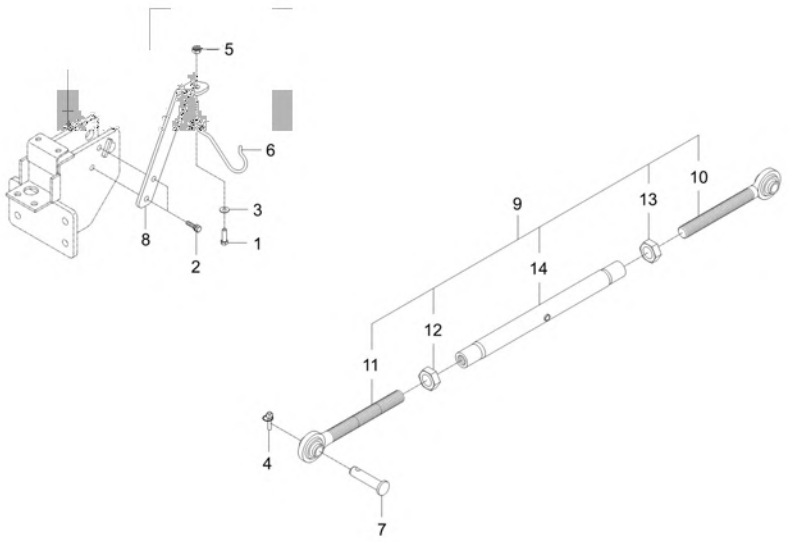

A : CK3510SEB

No.	Part Number	Description	Qty A	Qty B	Qty C	Qty D	Qty E	I.C	Remark
1	01123-50818	BOLT, WASHER	2						M8*P1.25
2	01774-51030	FLANGE BOLT	1						
3	04013-50100	PLAIN WASHER	1						M10
4	34150-3764-4TP	PIN,CLIP	1						DIA10.0
5	41182-5151-1	NUT, REMOVE CHECK	1						DIA10
6	T5410-48081	CLIP,TOP LINK	1						
7	T5710-37631	PIN TOP LINK	1						
8	TC26-0032A	HOLDER, TOP LINK	1						
9	TC26-1296A	Use TC26-0068A dnr v	1						
10	32240-7121-4	TOP LINK JOINT RH	1						
11	32240-7122-4	USE 32240-71224	1						
12	32244-7118-2	NUT,TOP LINK	1						M24P3.0
13	32244-7118-2	NUT,TOP LINK	1						M24P3.0
14	TC26-0069A	BODY, TOP LINK	1						

----> Old replace New
<----> Interchangeable
* Please place an order assy(*)
<---- New replace Old
<-O-> Interchangeable with another part(s)
<-X-> Not interchangeable

https://tractormanualz.com/

TC2-G684005

LIFT ROD GROUP

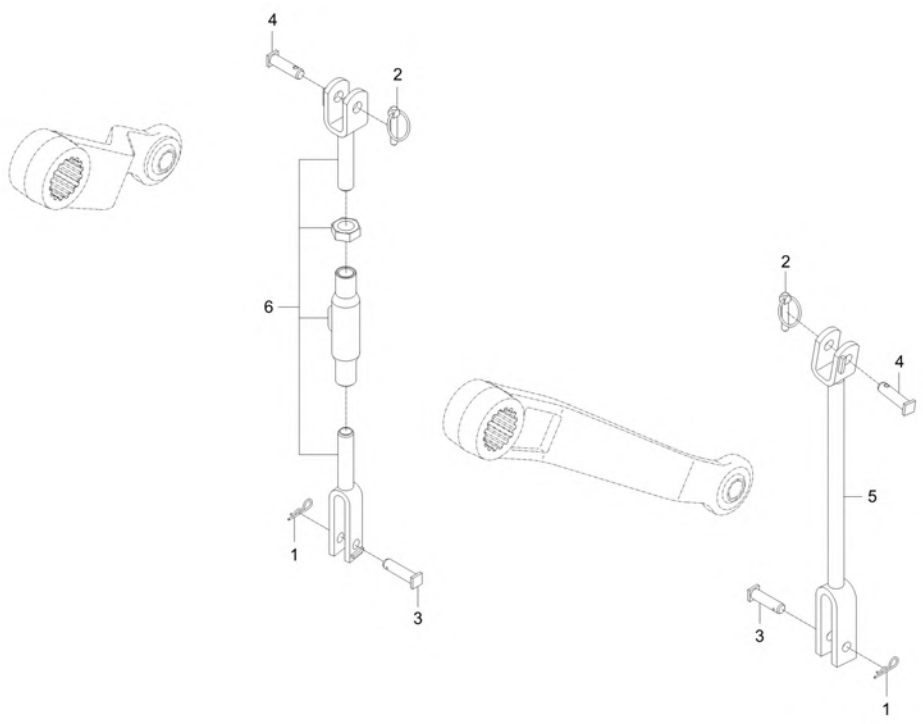

A : CK3510SEB

No.	Part Number	Description	Qty A	Qty B	Qty C	Qty D	Qty E	I.C	Remark
1	05515-51600	PIN, SNAP	2						
2	34150-3764-4TP	PIN,CLIP	2						DIA10.0
3	T4363-71581TP	PIN	2						
4	T4620-85471TP	PIN, LIFT ROD	2						
5	T5855-65032	LIFT ROD,LH	1						-
6	T5855-65042	LIFT ROD,RH	1						-

----> Old replace New
<----> Interchangeable
* Please place an order assy(*)
<---- New replace Old
<-O-> Interchangeable with another part(s)
<-X-> Not interchangeable

https://tractormanualz.com/

TC2-G695005

PTO SHAFT COVER GROUP

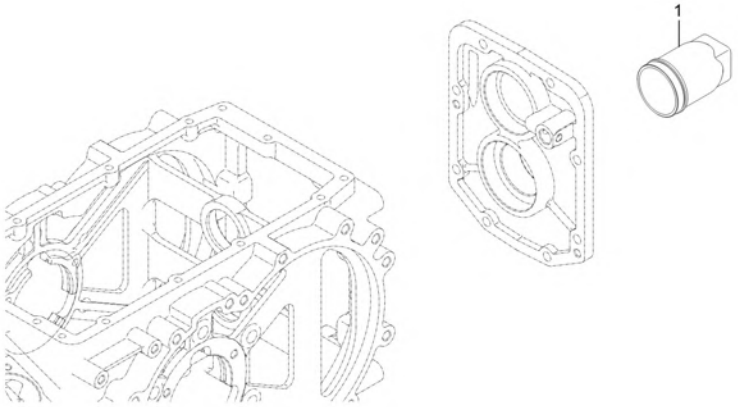

A : CK3510SEB

No.	Part Number	Description	Qty A	Qty B	Qty C	Qty D	Qty E	I.C	Remark
1	T2181-25442	COVER, PTO SHAFT v	1						

----> Old replace New
<----> Interchangeable
* Please place an order assy(*)
<---- New replace Old
<-O-> Interchangeable with another part(s)
<-X-> Not interchangeable

https://tractormanualz.com/

TC2-G6D4004

LABEL(FRAME) GROUP

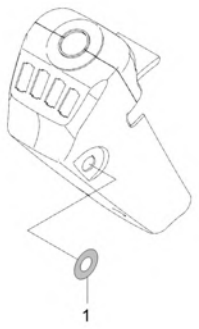

A : CK3510SEB

No.	Part Number	Description	Qty A	Qty B	Qty C	Qty D	Qty E	I.C	Remark
1	T5248-52102	LABEL, START SWITCH	1						

----> Old replace New
<----> Interchangeable
* Please place an order assy(*)
<---- New replace Old
<-O-> Interchangeable with another part(s)
<-X-> Not interchangeable

https://tractormanualz.com/

TC2-G6F6501

REFLECTOR GROUP

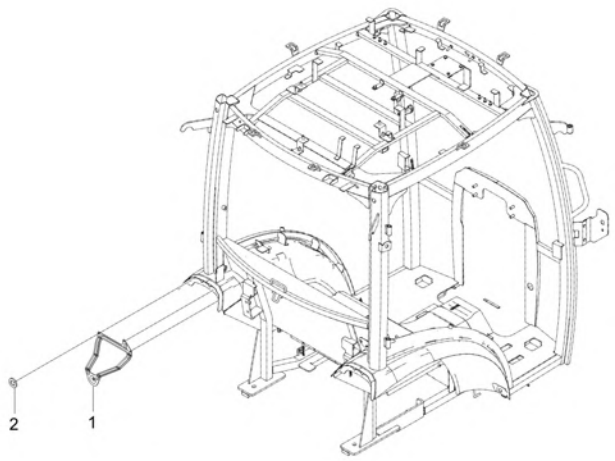

A : CK3510SEB

No.	Part Number	Description	Qty A	Qty B	Qty C	Qty D	Qty E	I.C	Remark
1	TC26-1443A	BRACKET, REFLECTOR	2 UJJ700001 ~ UJJ700224						T4.5
1	TC26-1614A	BRAC KET, REFLECTOR - PRESS	2 UJJ700225 ~ WJJ700036					<------	T1.2
2	04015-50060	WASHER, PLAIN	2						M6

----> Old replace New
<---> Interchangeable
* Please place an order assy(*)
<---- New replace Old
<-O-> Interchangeable with another part(s)
<-X-> Not interchangeable

https://tractormanualz.com/

TC2-G6G1503

FRONT WEIGHT GROUP

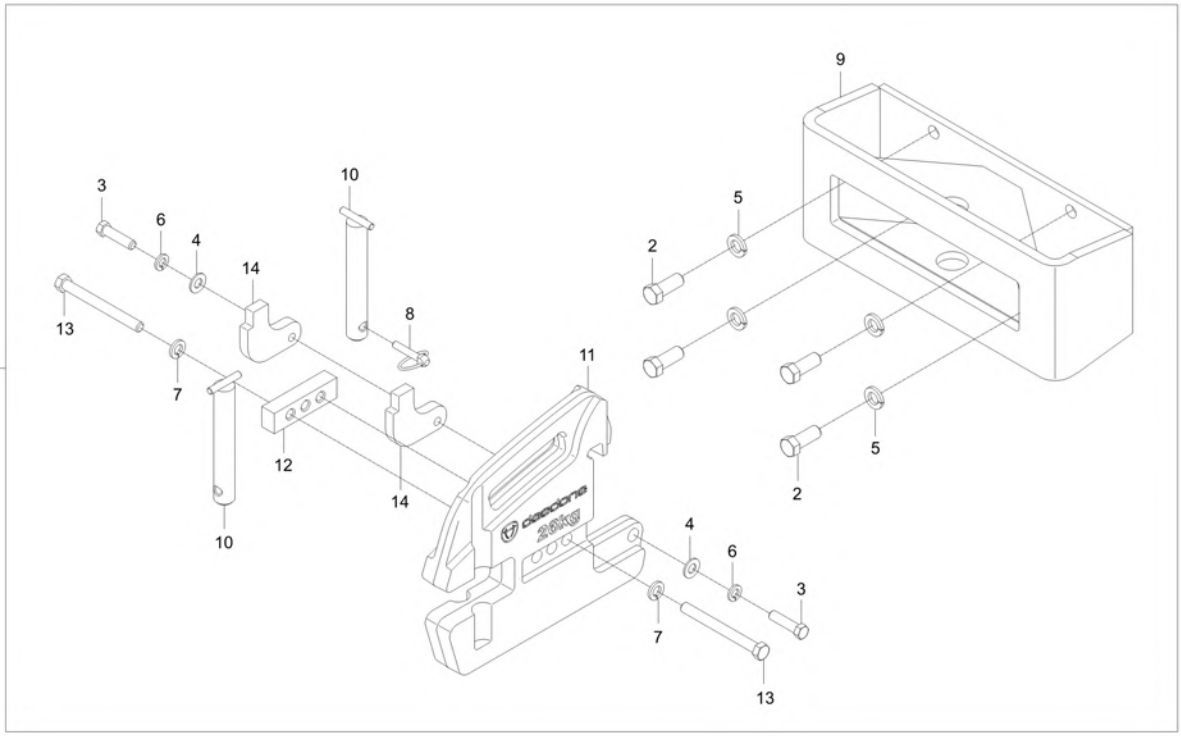

A : CK3510SEB

No.	Part Number	Description	Qty A	Qty B	Qty C	Qty D	Qty E	I.C	Remark
1	T5710-A5031	WEIGHT KIT	1						
1	T5710-A5032	WEIGHT KIT	1					<------	
2	01173-51435	BOLT v	4						M14XP1.5
3	01173-51455	BOLT	2						M14P1.5*55
4	04013-50140	PLAIN WAHSER	2						M14
5	04512-50140	SPRING WASHER	4						
6	04512-50140	SPRING WASHER	2						
7	04512-50160	WASHER, SPRING	2						M16
8	34150-3764-4	PIN,CLIP	1						DIA10.0
9	T5525-89411	BRACKET, FRONT-WEIGHT dnr v	1						
10	T5525-89421	PIN	2						
11	T5525-89451	WEIGHT, FR RR dnr v	6						
11	T5525-89452		6					<------	
12	T5525-89461	MOUNTING PLATE v	1						T25.0
13	T5525-89471	BOLT, FRONT WIGHT	2						M16XP1.5XL 150
14	T5525-89481	BRACKET	2						T16

----> Old replace New
<---- New replace Old
<-X-> Not interchangeable
<---> Interchangeable
<-O-> Interchangeable with another part(s)
* Please place an order assy(*)

https://tractormanualz.com/

TC2-G611203

AIR CLEANER SUPPORT GROUP

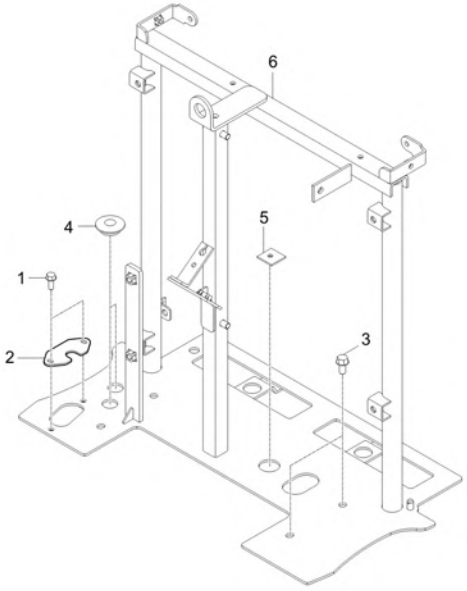

A : CK3510SEB

No.	Part Number	Description	Qty A	Qty B	Qty C	Qty D	Qty E	I.C	Remark
1	01754-50612	BOLT, FLANGE	2						M6*1.0
2	T2185-50441	PLATE, GUIDE	1						T2.3
3	T2185-70491	BOLT	4						
4	T4125-50591	RUBBER, CUSHION	2						
5	T4876-50251	SPONGE	1						
6	TC26-0422D	SUPPORT, AIR CLEANER	1 ~ VJJ700008						
6	TC26-0422E	SUPPORT, AIR CLEANER	1 VJJ700009 ~ WJJ700036					<----->	

----> Old replace New
<---> Interchangeable
* Please place an order assy(*)
<---- New replace Old
<-O-> Interchangeable with another part(s)
<-X-> Not interchangeable

https://tractormanualz.com/

TC2-G612510

RADIATOR GROUP

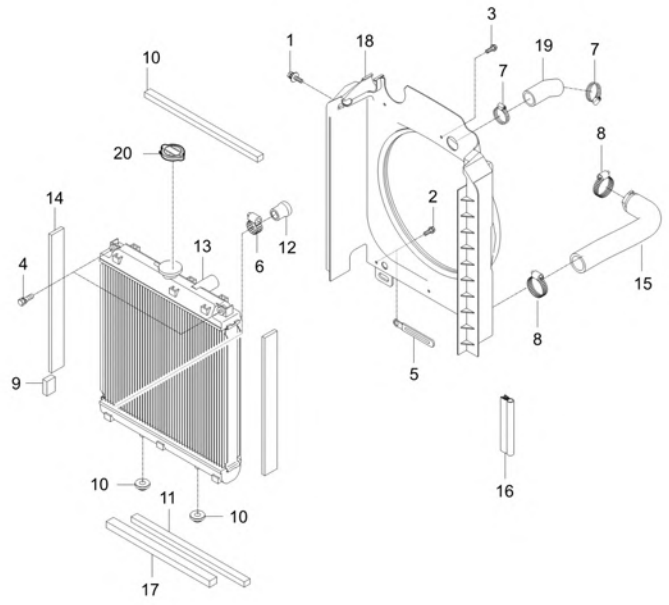

A : CK3510SEB

No.	Part Number	Description	Qty A	Qty B	Qty C	Qty D	Qty E	I.C	Remark
1	01027-50616	BOLT, WASHER	2						
2	01027-50620	BOLT, WASHER	1						
3	01754-50612	BOLT, FLANGE	4						M6*1.0
4	01754-50622	BOLT FLANGE	2						
5	37150-3447-1	WIR'G CLAMP	1						T0.5
6	66204-3623-1	BAND, HOSE	1						
7	E1500-18411	CLAMP BAND	2						
8	E1500-18411	CLAMP BAND	2						
9	T2350-50021	SPONGE	1						
10	T4125-13561	CUSHION	2						
11	T4931-72091	SPONGE	2						
12	T5535-50451	CAP, SEALING	1						
13	T5855-50411	RADIATOR ASSY dnr v	1 ~ WJJ700032						
13	TC26-1800A	ASSY RADIATOR-OS	1 WJJ700033 ~ WJJ700036					<----->	-
14	T5855-50431	SPONGE,2	2						45X10XL
15	T5855-50483	HOSE,LOWER	1						OD 46 / ID 34
16	T5855-50552	RUBBER,RADIATOR	2						-
17	T5855-50571	SPONGE, 5	1						고발포 PU 폼

----> Old replace New
<----> Interchangeable
* Please place an order assy(*)
<---- New replace Old
<-O-> Interchangeable with another part(s)
<-X-> Not interchangeable

https://tractormanualz.com/

TC2-G612510

RADIATOR GROUP

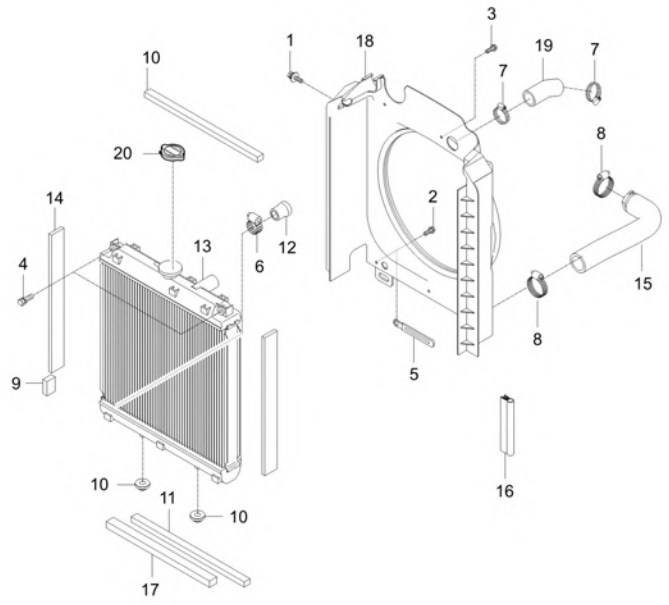

A : CK3510SEB

No.	Part Number	Description	Qty A	Qty B	Qty C	Qty D	Qty E	I.C	Remark
18	TC26-0417A	SHROUD	1						
19	TC26-0420B	HOSE, COOLING WATER-UPR dnr v	1 UJJ700001 ~ UJJ700116						OD46/ID35
19	TC26-0420C	HOSE, COOLING WATER-UPR v	1 UJJ700117 ~ WJJ700036					<----->	OD46/ID35
20	U3215-77501	Radiator Cap	1						

----> Old replace New
<---> Interchangeable
* Please place an order assy(*)
<---- New replace Old
<-O-> Interchangeable with another part(s)
<-X-> Not interchangeable

https://tractormanualz.com/

TC2-G614502

FUEL COOLER GROUP

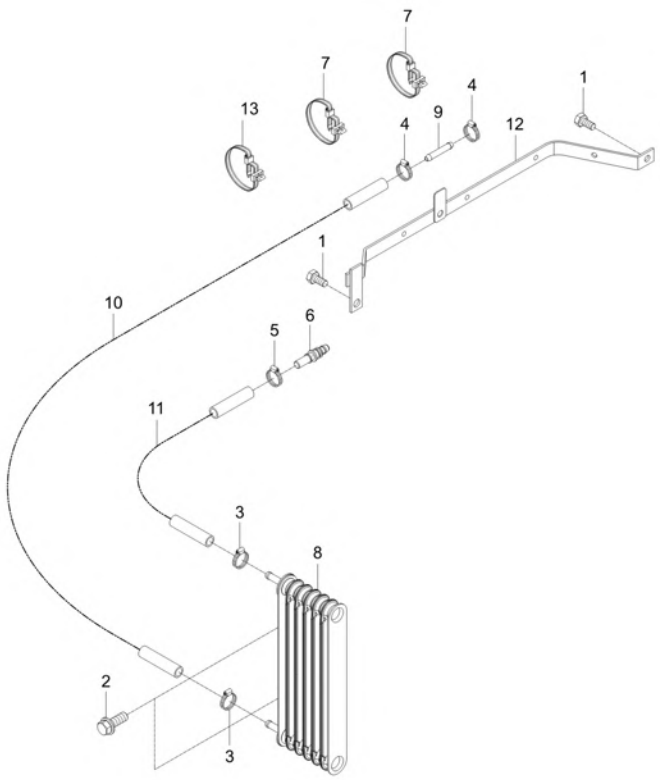

A : CK3510SEB

No.	Part Number	Description	Qty A	Qty B	Qty C	Qty D	Qty E	I.C	Remark
1	01754-50812	BOLT, FLANGE	1						M8XP1.25
2	01754-50820	BOLT, FLANGE	2						M8XP1.25
3	15301-7247-0	CLIP, HOSE	2						스탠16#
4	15301-7247-0	CLIP, HOSE	1						스탠16#
5	15301-7247-0	CLIP, HOSE	1						스탠16#
6	F6800-16181	ADAPTER	1						OD8.4*ID4.7
7	P5370-82551	BAND, CABLE	2						
8	T5315-81251	FUEL COOLER	1						
9	T5855-55261	TUBE, CONNECTING	1						0.8T
10	TC26-0423A	FUEL, HOSE	1						OD12.8 / ID7
11	TC26-0424A	FUEL, HOSE	1						OD12.8 / ID7
12	T2185-69771	BRACKET WIRE HARNESS	2						T1.6
13	T2185-82561	BAND, CORD v	1						L200

----> Old replace New
<---> Interchangeable
* Please place an order assy(*)
<---- New replace Old
<-O-> Interchangeable with another part(s)
<-X-> Not interchangeable

https://tractormanualz.com/

TC2-G615512

BONNET GROUP

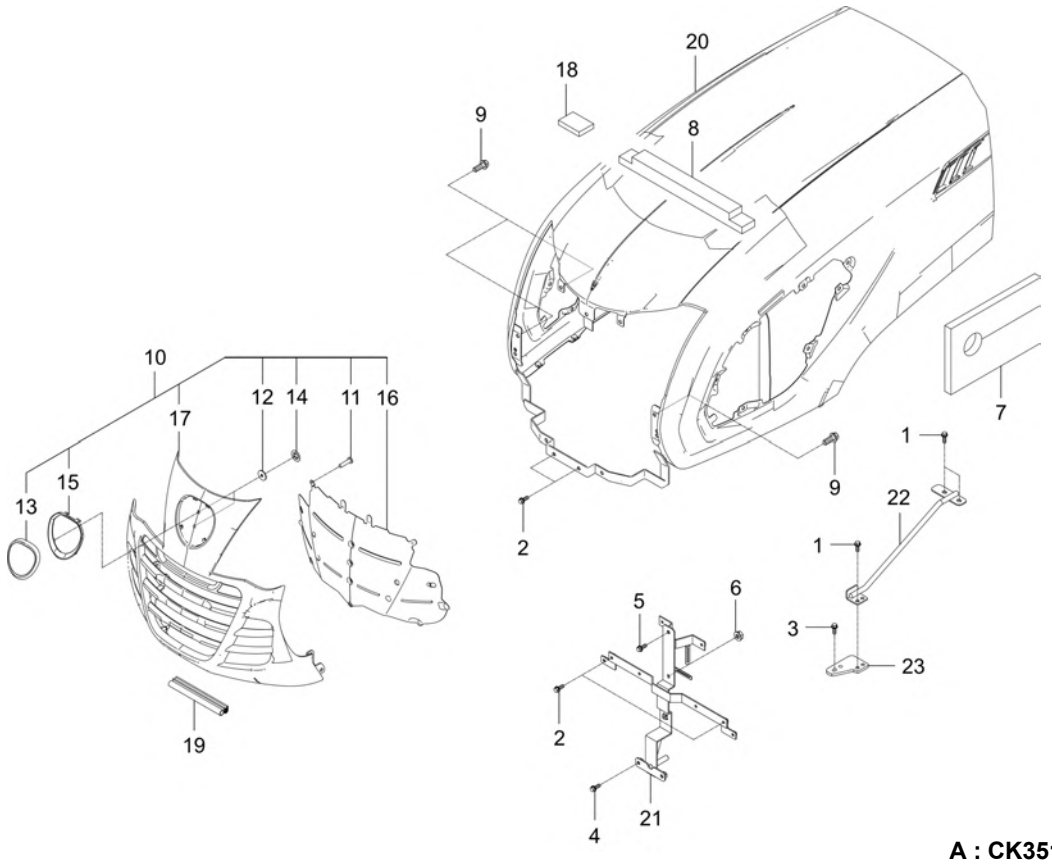

A : CK3510SEB

No.	Part Number	Description	Qty A	Qty B	Qty C	Qty D	Qty E	I.C	Remark
1	01123-50820	BOLT, WASHER v	4						M8XP1.25
2	01754-50614	FLANGE BOLT	2						
3	01754-50816	BOLT, FLANGE	3						M8XP1.25
4	01754-50816	BOLT, FLANGE	2						M8XP1.25
5	01754-50816	BOLT, FLANGE	1						M8XP1.25
6	02751-50060	NUT, FLANGE	3						M6XP1.0
7	T4665-50382	PLATE,HEAT	1						
8	T5525-50441	SPONGE	1 ~ VJJ700088						
8	TC26-1801A	SPONGE	1 VJJ700089 ~ WJJ700036					<----->	
9	T5710-51181	SCREW	6						M5 X 10
10	T5850-51851	FRONT GRILL ASSY	1						N
11	38430-1827-1	SCREW	20						-
12	82KC-0641	PLATE, RUBBER	2						
13	T2185-51462	EMBLEM	1						
14	T4620-50701	PLATE, FIXED	2						
15	T5710-51092	BEGEL, EMBLEM	1						N
16	T5818-51851	GRILLE,BONNET	1						N
17	T5858-51852	GRILL, BONNET	1						N

----> Old replace New
<----> Interchangeable
* Please place an order assy(*)
<---- New replace Old
<-O-> Interchangeable with another part(s)
<-X-> Not interchangeable

https://tractormanualz.com/

TC2-G615512

BONNET GROUP

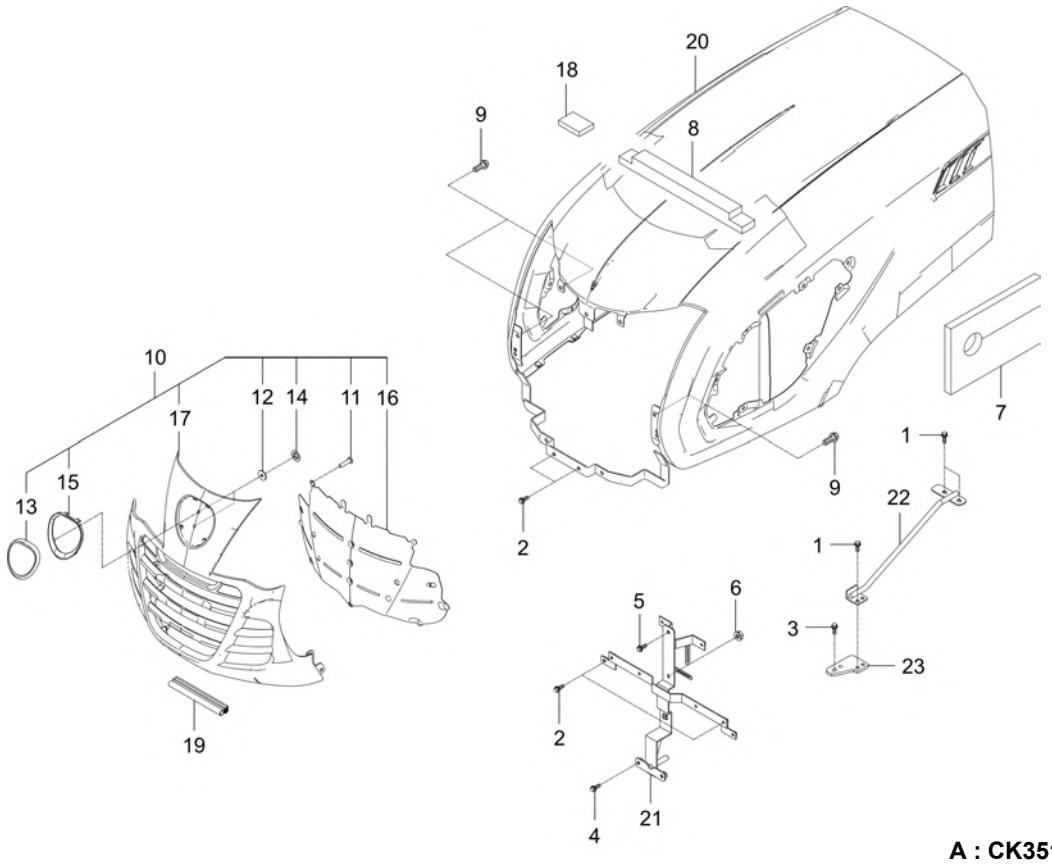

A : CK3510SEB

No.	Part Number	Description	Qty A	Qty B	Qty C	Qty D	Qty E	I.C	Remark
18	T5855-50542	SPONGE, 4	2						<F6>□<F>95 X60, T2
19	T5855-51861	RUBBER	1						
20	TC26-0426B	TRK ASSY BONNET dnr v	1 ~ VJJ700088						
20	TC26-0426BOE	TRK - BONNET ASSY v	1					<------	
20	TC26-0426COE	ASSY BONNET	1					<----->	
21	TC26-0427A	PLATE, BONNET REINFMT-FR	1						
22	TC26-0431A	GUIDE, HARNESS	1						
22	TC26-0431B	GUIDE, HARNESS	1					<----->	
23	TC26-0693B	BRACKET-TIER4	1						T6.0

----> Old replace New
<----> Interchangeable
* Please place an order assy(*)
<---- New replace Old
<-O-> Interchangeable with another part(s)
<-X-> Not interchangeable

https://tractormanualz.com/

TC2-G615701

BONNET SIDE COVER GROUP

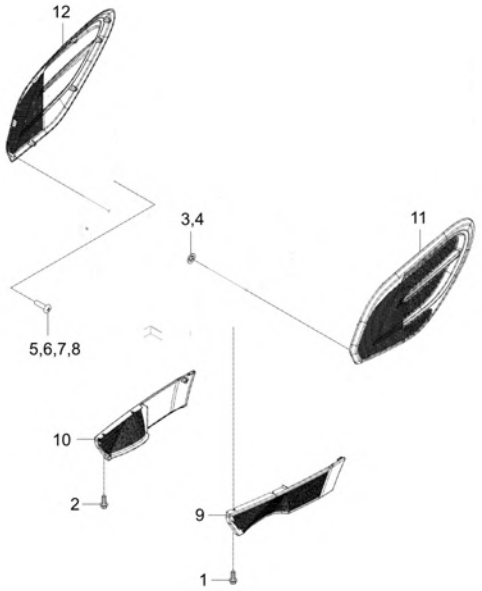

A : CK3510SEB

No.	Part Number	Description	Qty A	Qty B	Qty C	Qty D	Qty E	I.C	Remark
1	01754-50614	FLANGE BOLT	2						
2	01754-50614	FLANGE BOLT	2						
3	T4620-50701	PLATE, FIXED	1						
4	T4620-50701	PLATE, FIXED	1						
5	T5710-51181	SCREW	3						M5 X 10
6	T5710-51181	SCREW	7						M5 X 10
7	T5710-51181	SCREW	7						M5 X 10
8	T5710-51181	SCREW	3						M5 X 10
9	T5818-51051	SIDE GRILL, RH,LWR	1						T3.0
10	T5818-51061	SIDE GRILL, RH,LWR	1						T3.0
11	T5858-51862	BONNET SIDE GRILL, LH v	1						-
12	T5858-51872	BONNET SIDE GRILL, RH	1						-

----> Old replace New
<---- New replace Old
<-X-> Not interchangeable
<---> Interchangeable
<-O-> Interchangeable with another part(s)
* Please place an order assy(*)

https://tractormanualz.com/

TC2-G616002

BONNET SUPPORT GROUP

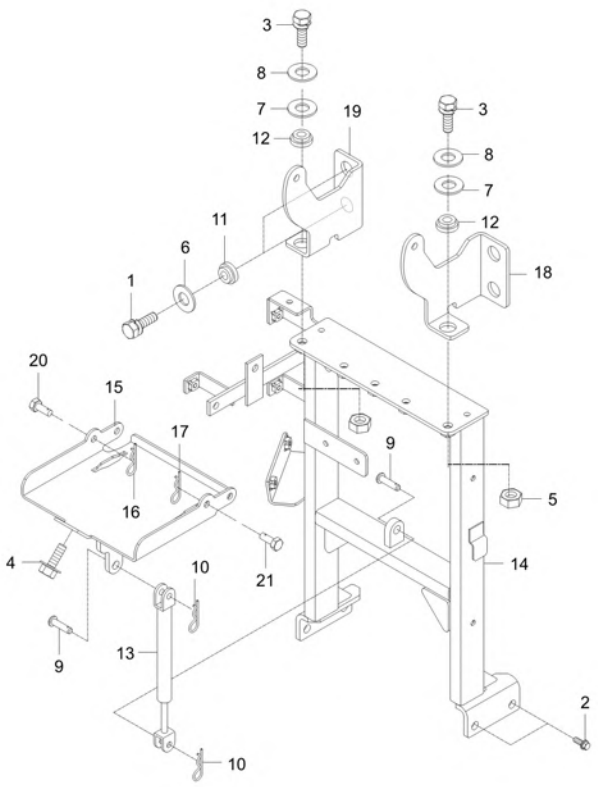

A : CK3510SEB

No.	Part Number	Description	Qty A	Qty B	Qty C	Qty D	Qty E	I.C	Remark
1	01123-51030	BOLT	4						M10*1.5
2	01133-51020	BOLT	4						M10XP1.25
3	01517-51030	STUD	2						
4	01754-50816	BOLT, FLANGE	1						M8XP1.25
5	02176-50100	NUT v	2						M10XP1.25
6	04015-50100	WASHER, PLAIN	4						M10
7	76KB-0512	WASHER	2						10.5*22*T3.2
8	04512-50100	SPRING WASHER	2						M10
9	05122-51025	JOINT PIN	2						DIA10*25
10	05515-51000	Split Pin	2						DIA10
11	T5520-80531	BUSHING	2						
12	T5520-80531	BUSHING	4						
13	T5710-51191	AIR CYLINDER	1						
14	TC26-0695B	SUPPORT, BONNET dnr v	1 UJJ700001 ~ UJJ700084						
14	TC26-0695C	SUPPORT, BONNET v	1 UJJ700085 ~ WJJ700036					<------	
15	TC26-0942B	ASSY BRACKET, HINGE BONNET	1						
16	05515-50800	PIN, SNAP	1						M8
17	05515-50800	PIN, SNAP	1						M8

----> Old replace New <---- New replace Old <-X-> Not interchangeable
<---> Interchangeable <-O-> Interchangeable with another part(s)
* Please place an order assy(*)

https://tractormanualz.com/

TC2-G616002

BONNET SUPPORT GROUP

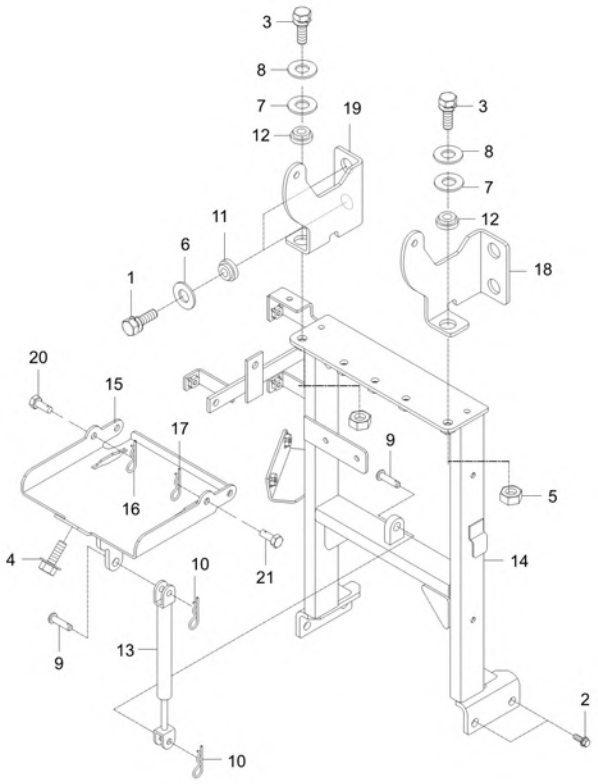

A : CK3510SEB

No.	Part Number	Description	Qty A	Qty B	Qty C	Qty D	Qty E	I.C	Remark
18	TC26-0697B	BRACKET, HINGE BONNET-LH	1						T4.5
19	TC26-0698B	BRACKET, HINGE BONNET-RH	1						T4.5
20	05122-50814	PIN,JOINT	1						
21	05122-50814	PIN,JOINT	1						

----> Old replace New
<---- New replace Old
<-X-> Not interchangeable
<---> Interchangeable
<-O-> Interchangeable with another part(s)
* Please place an order assy(*)

https://tractormanualz.com/

TC2-G617502

FUEL FILTER GROUP

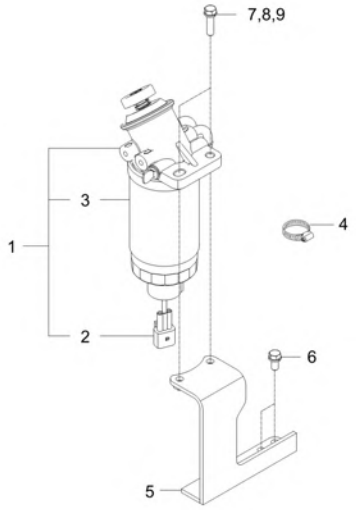

A : CK3510SEB

No.	Part Number	Description	Qty A	Qty B	Qty C	Qty D	Qty E	I.C	Remark
1	F5805-16402	FILTER, FUEL ASSY v	1						
2	F6800-16121	SENSOR, FUEL WATER	1						
3	F6800-16411	FILTER, FUEL v	1						
4	F6800-91851	BAND, HOSE	1						12-22mm
5	EF36-0005A	BRACKET, FUEL-FILTER	1						
6	01123-50816	Hex Head Cap Screw	2						M8XP1.25
7	01754-50840	BOLT,FLANGE	2						
8	01754-50840	BOLT,FLANGE	1						
9	01754-50840	BOLT,FLANGE	1						

----> Old replace New
<---- New replace Old
<-X-> Not interchangeable
<---> Interchangeable
<-O-> Interchangeable with another part(s)
* Please place an order assy(*)

https://tractormanualz.com/

TC2-G624002

VIBRATIONPROOF RUBBER GROUP

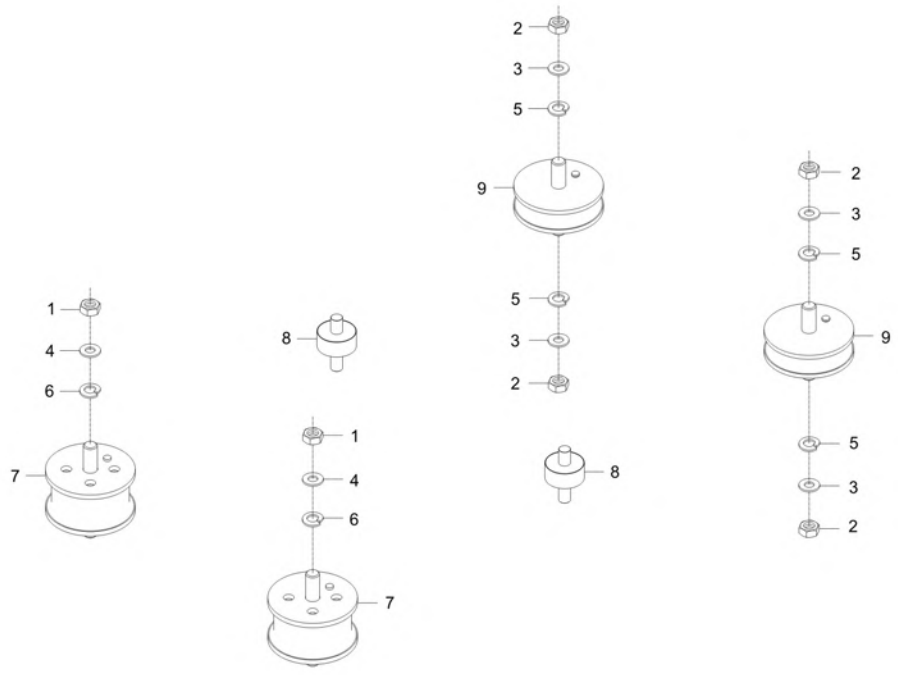

A : CK3510SEB

No.	Part Number	Description	Qty A	Qty B	Qty C	Qty D	Qty E	I.C	Remark
1	02076-50120	NUT	4						
2	02176-50120	NUT	4						M12XP1.25
3	04011-50120	WASHER, PLAIN	4						M12
4	04011-50120	WASHER, PLAIN	4						M12
5	04512-50120	SPRING WASHER	4						M12
6	04512-50120	SPRING WASHER	4						M12
7	T5410-70211	DUSTPROOF RUBBER	2						
8	T5520-80391	DUSTPROOF RUBBER	2						
9	T5710-52051	DUSTPROOF RUBBER	2						N

----> Old replace New
<----> Interchangeable
* Please place an order assy(*)
<---- New replace Old
<-O-> Interchangeable with another part(s)
<-X-> Not interchangeable

https://tractormanualz.com/

TC2-G636010

REAR VIEW MIRROR GROUP

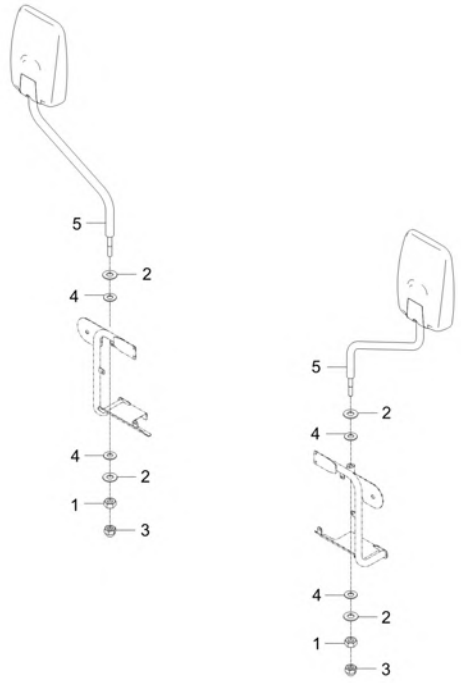

A : CK3510SEB

No.	Part Number	Description	Qty A	Qty B	Qty C	Qty D	Qty E	I.C	Remark
1	02176-50100	NUT v	2						M10XP1.25
2	04013-50100	PLAIN WASHER	4						M10
3	44366-4723-1	NUT,CAP	2						
4	T4668-83301	SPRING	4						
5	T5565-88201	REAR VIEW MIRROR	2						

----> Old replace New
<---- New replace Old
<-X-> Not interchangeable
<---> Interchangeable
<-O-> Interchangeable with another part(s)
* Please place an order assy(*)

https://tractormanualz.com/

TC2-G637004

LEVER GUIDE(ROPS) GROUP

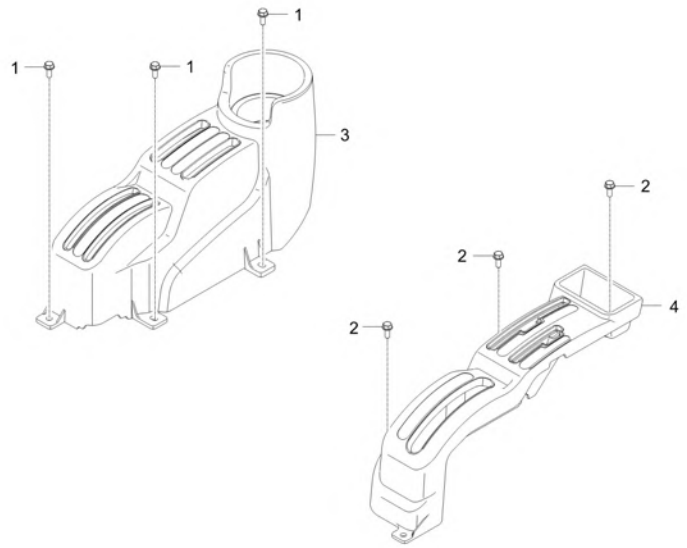

A : CK3510SEB

No.	Part Number	Description	Qty A	Qty B	Qty C	Qty D	Qty E	I.C	Remark
1	T4625-55431	FLANGE BOLT	4						
2	T4625-55431	FLANGE BOLT	4						
3	TC26-0487B	GUIDE, LEVER-RH dnr v	1 UJJ700001 ~ TJJ700030						
3	TC26-0487C	GUIDE, LEVER-RH v	1 TJJ700031 ~ WJJ700036					<------	
4	TC26-0604F	GUIDE, LEVER-LH	1						
4	TC26-0604G	GUIDE, LEVER-LH	1					<----->	

----> Old replace New
<---- New replace Old
<-X-> Not interchangeable
<---> Interchangeable
<-O-> Interchangeable with another part(s)
* Please place an order assy(*)

https://tractormanualz.com/

TC2-G640104 MAIN SHIFT LEVER GROUP(SHUTTLE)

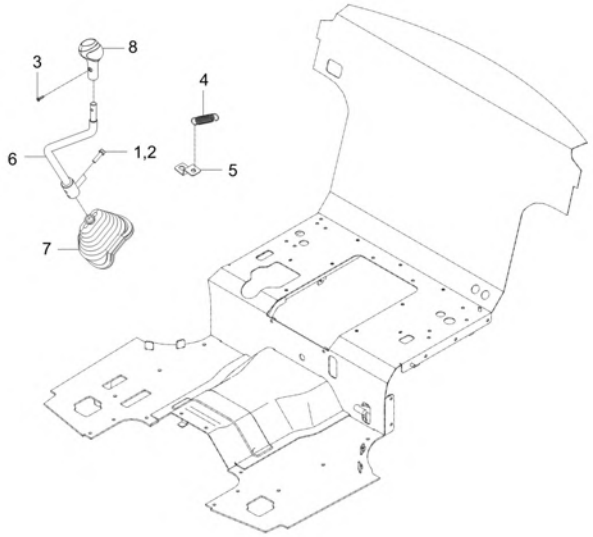

A : CK3510SEB

No.	Part Number	Description	Qty A	Qty B	Qty C	Qty D	Qty E	I.C	Remark
1	01123-50830	BOLT, WASHER v	1						M8P1.25*30
2	01123-50830	BOLT, WASHER v	1						M8P1.25*30
3	03016-50616	SCREW	1						M6XP1.0
4	T4153-27831	FRICTION SPRING	1						
5	T5250-68771	BRACKET	1						
6	T5815-56413	LEVER,MAIN	1						
7	TC26-0510A	BELLOWS, MAIN SHIFG	1						
8	TC26-1354A	GRIP, MAIN SHIFT	1						-

----> Old replace New <---- New replace Old <-X-> Not interchangeable
<---> Interchangeable <-O-> Interchangeable with another part(s)
* Please place an order assy(*)

https://tractormanualz.com/

TC2-G640504

RANGE SHIFT LEVER GROUP

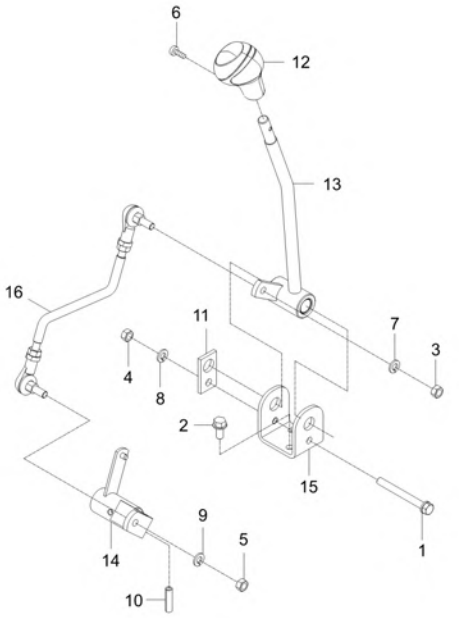

A : CK3510SEB

No.	Part Number	Description	Qty A	Qty B	Qty C	Qty D	Qty E	I.C	Remark
1	01123-50875	OB-BOLT	1						M8XP1.25
2	01754-50816	BOLT, FLANGE	2						M8XP1.25
3	02156-50080	NUT v	1						M8XP1.25
4	02156-50080	NUT v	1						M8XP1.25
5	02156-50080	NUT v	1 UJJ700001 ~ TJJ700002						M8XP1.25
5	02763-50080	FLANGE NUT	1 TJJ700003 ~ WJJ700036					<--O-->	M8XP1.25
6	03024-50514	BOLT,SCREW	1						
7	04512-50080	SPRING WASHER	1						M08
8	04512-50080	SPRING WASHER	1						M08
9	04512-50080	SPRING WASHER	1 UJJ700001 ~ TJJ700002						M08
9	01125-50835	BOLT	1 TJJ700003 ~ WJJ700036					<--O-->	M8*P1.25
10	05411-00632	PIN, SPRING	1						DIA6.4XL32
11	T2185-66531	SHAFT POSITION DRAFT v	1						
12	T5855-56261	GRIP	1						
13	TC26-0469A	LEVER, RANGE SHIFT	1						
14	TC26-0471A	ARM, CONNECTING RANGE SHIFT	1						
15	TC26-0472B	BRACKET, RANGE SHIFT	1						T4.5
16	TC26-0470A	ROD, RANGE SHIFT dnr v	1 UJJ700001 ~ TJJ700002						

----> Old replace New <---- New replace Old <-X-> Not interchangeable
<---> Interchangeable <-O-> Interchangeable with another part(s)
* Please place an order assy(*)

https://tractormanualz.com/

TC2-G640504

RANGE SHIFT LEVER GROUP

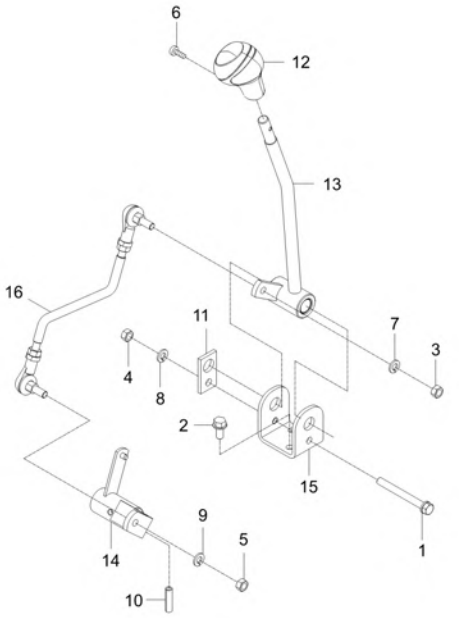

A : CK3510SEB

No.	Part Number	Description	Qty A	Qty B	Qty C	Qty D	Qty E	I.C	Remark
16	TC26-1560A	ROD, RANGE SHIFT v	1 TJJ700003 ~ WJJ700036					<--O-->	

----> Old replace New
<---> Interchangeable
* Please place an order assy(*)
<---- New replace Old
<-O-> Interchangeable with another part(s)
<-X-> Not interchangeable

https://tractormanualz.com/

TC2-G640506

RANGE SHIFT LEVER GROUP

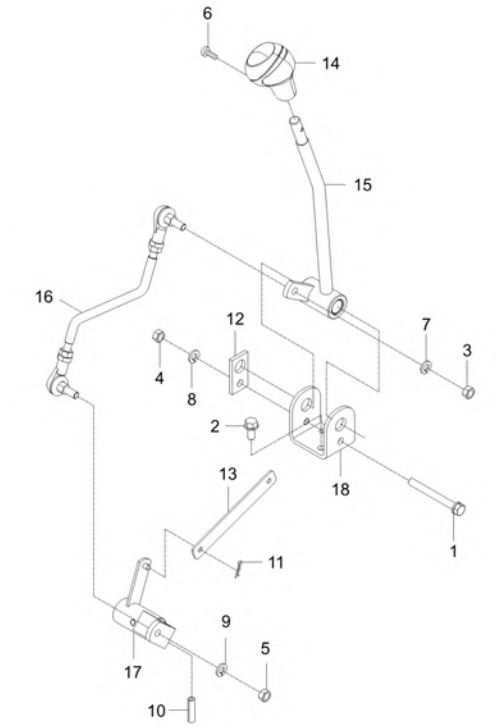

A : CK3510SEB

No.	Part Number	Description	Qty A	Qty B	Qty C	Qty D	Qty E	I.C	Remark
1	01123-50875	OB-BOLT	1						M8XP1.25
2	01754-50816	BOLT, FLANGE	2						M8XP1.25
3	02156-50080	NUT v	1						M8XP1.25
4	02156-50080	NUT v	1						M8XP1.25
5	02763-50080	FLANGE NUT	1						M8XP1.25
6	03024-50514	BOLT,SCREW	1						
7	04512-50080	SPRING WASHER	1						M08
8	04512-50080	SPRING WASHER	1						M08
9	01125-50835	BOLT	1						M8*P1.25
10	05411-00632	PIN, SPRING	1						DIA6.4XL32
11	05525-50600	SNAP PIN	1						DIA6
12	T2185-66531	SHAFT POSITION DRAFT v	1						
13	T5855-56241	BRACKET	1						T2.3
14	T5855-56261	GRIP	1						
15	TC26-0469A	LEVER, RANGE SHIFT	1						
16	TC26-1560A	ROD, RANGE SHIFT v	1						
17	TC26-0471A	ARM, CONNECTING RANGE SHIFT	1						
18	TC26-0472B	BRACKET, RANGE SHIFT	1						T4.5

----> Old replace New <---- New replace Old <-X-> Not interchangeable
<---> Interchangeable <-O-> Interchangeable with another part(s)
* Please place an order assy(*)

https://tractormanualz.com/

TC2-G641004 POSITION DRAFT CONTROL LEVER GROUP

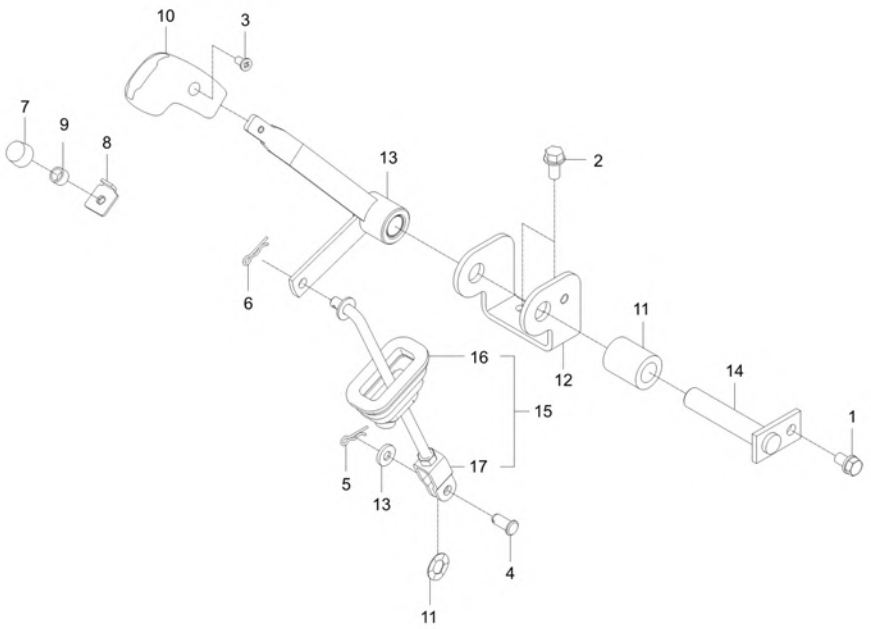

A : CK3510SEB

No.	Part Number	Description	Qty A	Qty B	Qty C	Qty D	Qty E	I.C	Remark
1	01123-50814	BOLT, WASHER	1						M8*P1.25
2	01754-50816	BOLT, FLANGE	2						M8XP1.25
3	03056-50510	SCREW	1						M5XP0.8
4	05122-50816	PIN, JOINT	1						DIA8XL16
5	05525-50800	PIN, SNAP	1						DIA8
6	05525-50800	PIN, SNAP	1						DIA8
7	53415-4128-1	BOLT, RESIN v	1						
8	T2350-95472	STOPPER v	1						
9	T4520-83301	SPACER	1						DIA10.5*T2.0
10	T5710-53471	GRIP	1						
11	T5715-53471	BUSHING	1						OD28,ID16.5
12	TC26-0478A	BRACKET	1 UJJ700001 ~ TJJ700002						T4.5
12	TC26-0478B	BRACKET	1 TJJ700003 ~ WJJ700036					<----->	T4.5
13	TC26-0479A	LEVER, CONTROL POSITION	1						
14	TC26-0578A	SHAFT	1						
15	TC26-0480A	ROD, CONTROL POSITION v	1						
16	T4880-64672	BOOT	1						
17	TC26-0480A	ROD, CONTROL POSITION v	1						

----> Old replace New
<---- New replace Old
<-X-> Not interchangeable
<---> Interchangeable
<-O-> Interchangeable with another part(s)
* Please place an order assy(*)

https://tractormanualz.com/

TC2-G641503 DOUBLE ACTING VALVE LEVER GROUP

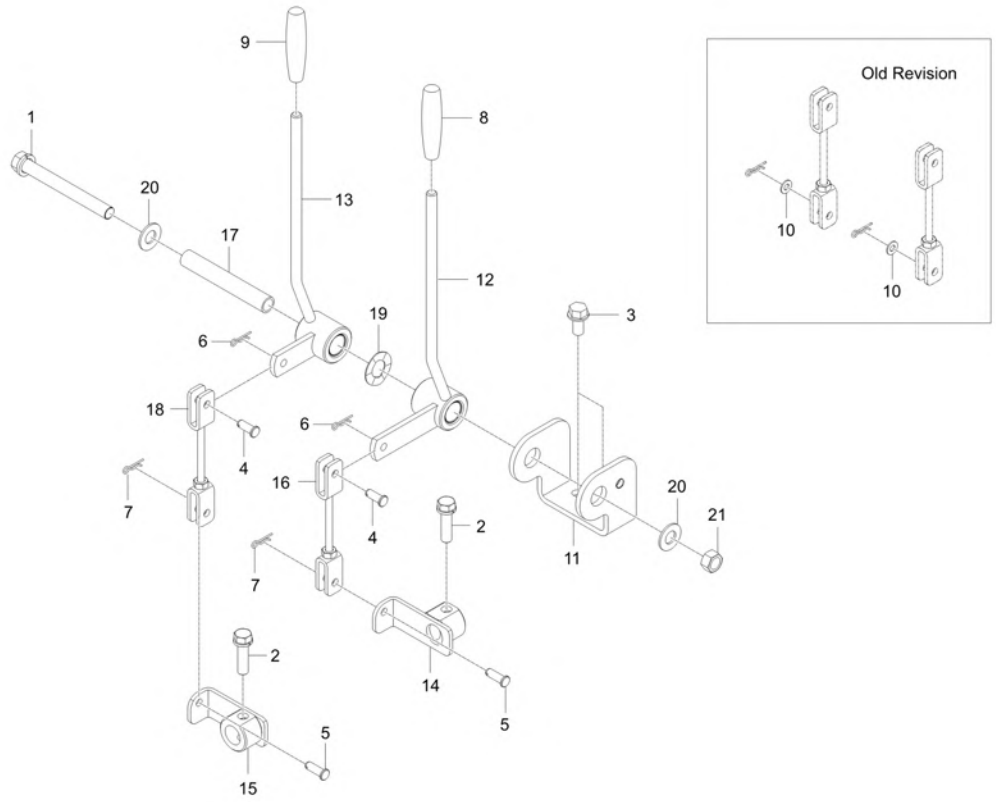

A : CK3510SEB

No.	Part Number	Description	Qty A	Qty B	Qty C	Qty D	Qty E	I.C	Remark
1	01133-51090	BOLT	1						P1.25
2	01123-50830	BOLT, WASHER v	2						M8P1.25*30
3	01754-50816	BOLT, FLANGE	2						M8XP1.25
4	05122-50616	PIN, JOINT	2						DIA6XL16
5	05122-50618	JOINT PIN	2						
6	05525-50600	SNAP PIN	2						DIA6
7	05525-50600	SNAP PIN	2						DIA6
8	T2185-71221	GRIP, GRAY	1						
9	T2185-71241	GRIP, DARK BLUE	1						
10	T4930-66751	WASHER 3	2						
11	TC26-0478A	BRACKET	1						T4.5
11	TC26-0478B	BRACKET	1					<----->	T4.5
12	TC26-0481A	LEVER, DOUBLE ACTING-LH	1						
13	TC26-0482A	LEVER, DOUBLE ACTING-RH	1						
14	TC26-0485A	LEVER, DOUBLE ACTING-1	1						
15	TC26-0486A	LEVER, DOUBLE ACTING-2	1						
16	TC26-0537A	ROD, DOUBLE ACTING	1						
17	U3215-52301	BUSH	1						-

----> Old replace New
<---- New replace Old
<-X-> Not interchangeable
<---> Interchangeable
<-O-> Interchangeable with another part(s)
* Please place an order assy(*)

https://tractormanualz.com/

TC2-G641503 DOUBLE ACTING VALVE LEVER GROUP

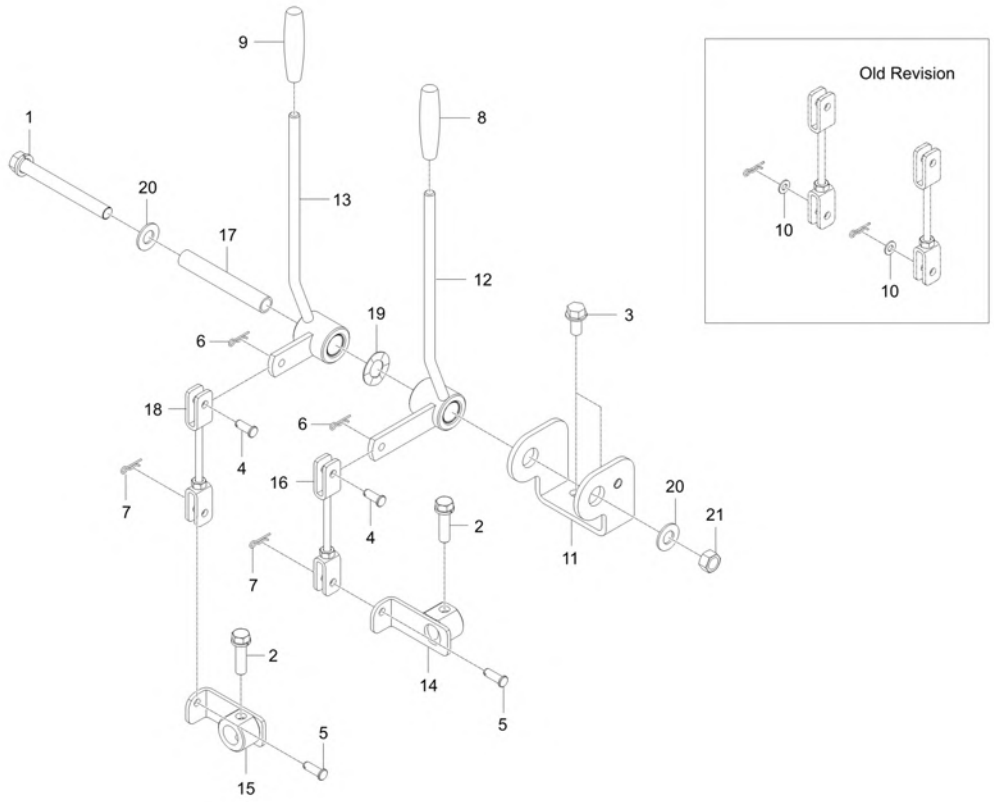

A : CK3510SEB

No.	Part Number	Description	Qty A	Qty B	Qty C	Qty D	Qty E	I.C	Remark
18	TC26-1311A	ROD, DOUBLE ACTING	1						
19	TC26-1438A	WASHER, PLATE SPRING	1						T0.3
20	04014-50100	PLAIN WASHER	2						M10
21	02176-50100	NUT v	1						M10XP1.25

----> Old replace New <---- New replace Old <-X-> Not interchangeable
<---> Interchangeable <-O-> Interchangeable with another part(s)
* Please place an order assy(*)

https://tractormanualz.com/

TC2-G644503 FRONT WHEEL DRIVE LEVER GROUP

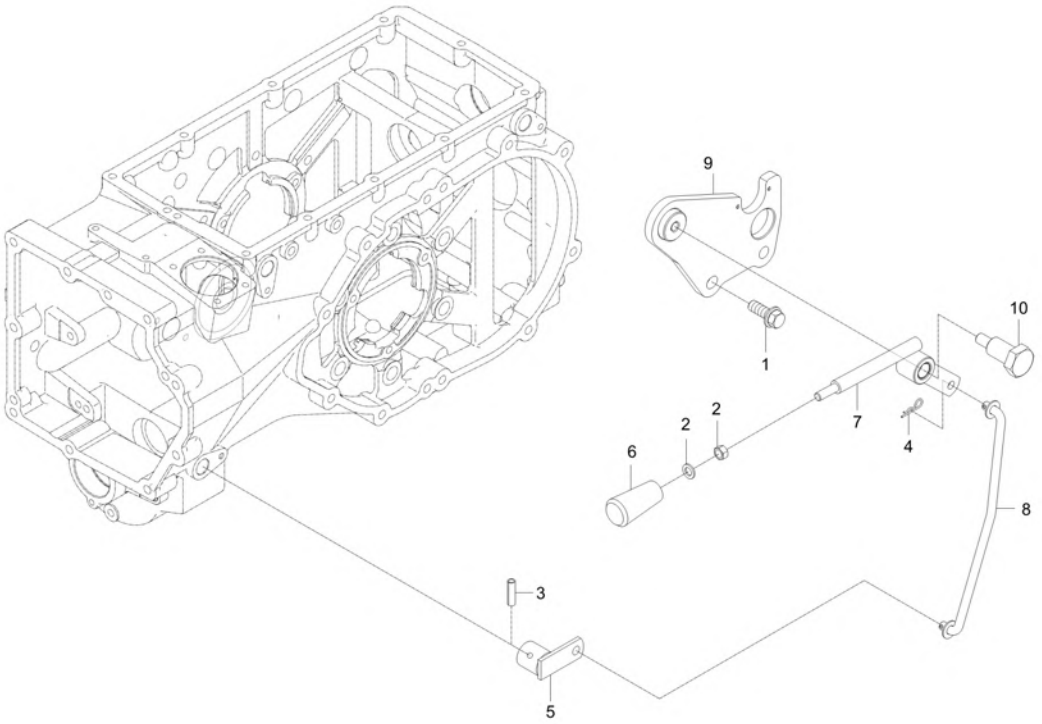

A : CK3510SEB

No.	Part Number	Description	Qty A	Qty B	Qty C	Qty D	Qty E	I.C	Remark
1	01133-51225	BOLT, WASHER v	2						M12*P1.25
2	02176-50100	NUT v	1						M10XP1.25
3	05411-00630	PIN, SPRING	1						DIA6*30
4	05515-51000	Split Pin	2						DIA10
5	T2185-44764	LINK1,FRONT DRIVE	1						
6	T5715-53611	GRIP	1						N
7	T5855-57612	4WD LEVER	1 ~ WJJ700032						
7	T5855-57613	4WD LEVER	1 WJJ700033 ~ WJJ700036					<----->	
8	T5855-57632	ROD ,FRONT DRIVE	1						
9	TC26-0489A	BRACKET, 4WD	1						
10	TC26-0490A	BOLT 4WD	1						HEX 27

----> Old replace New <---- New replace Old <-X-> Not interchangeable
<---> Interchangeable <-O-> Interchangeable with another part(s)
* Please place an order assy(*)

https://tractormanualz.com/

TC2-G645502

DIFFERENTIAL PEDAL GROUP

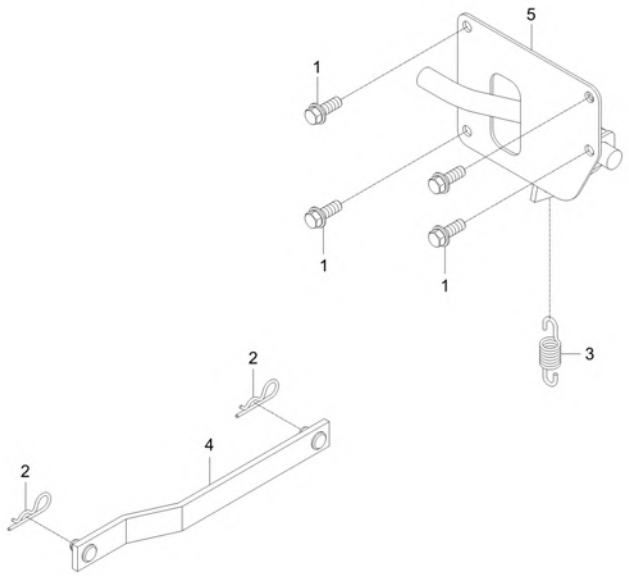

A : CK3510SEB

No.	Part Number	Description	Qty A	Qty B	Qty C	Qty D	Qty E	I.C	Remark
1	01754-50816	BOLT, FLANGE	4						M8XP1.25
2	05525-50800	PIN, SNAP	2						DIA8
3	T4153-27831	FRICTION SPRING	1						
4	T5855-57411	ROD, DIFFERENT LOCK	1						N
5	TC26-1074A	SUB ASSY PEDAL, DIFF LOCK	1						

----> Old replace New
<----> Interchangeable
* Please place an order assy(*)
<---- New replace Old
<-O-> Interchangeable with another part(s)
<-X-> Not interchangeable

https://tractormanualz.com/

TC2-G646004

CLUTCH PEDAL GROUP

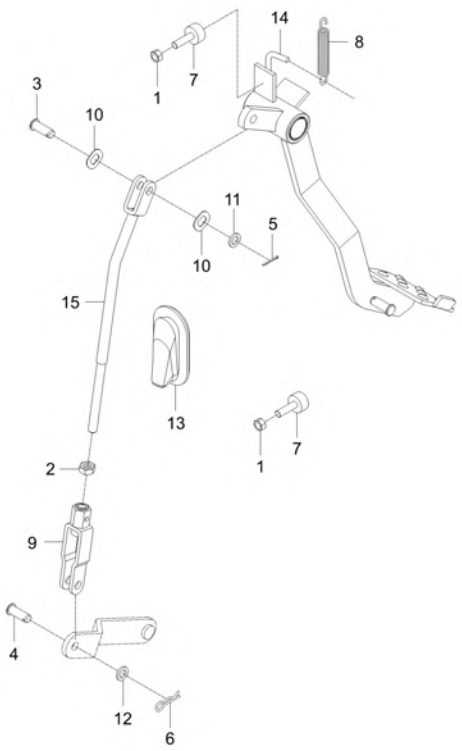

A : CK3510SEB

No.	Part Number	Description	Qty A	Qty B	Qty C	Qty D	Qty E	I.C	Remark
1	02156-50080	NUT v	2						M8XP1.25
2	02176-50100	NUT v	1						M10XP1.25
3	05122-51028	PIN, JOINT v	1						DIA10
4	05122-51028	PIN, JOINT v	1						DIA10
5	05511-50218	PIN, SPLIT	1						DIA2*18
6	05515-51000	Split Pin	1						DIA10
7	T2350-55881	BOLT ADJUSTING	2						
8	T2350-55961	SPRING BRAKE	1						DIA2.3
9	T4135-55531	CLUTCH ROD	1						
10	T4157-56111	SPRING	2						
11	T4930-66731	WASHER 1	1						
12	T4930-66731	WASHER 1	1						
13	T5710-80013	PEDAL, CLUTCH	1						N
14	T5710-80041	BOOT	1						N
15	TC26-0464A	ROD, CLUTCH-1 dnr v	1						
15	TC26-0464B	ROD, CLUTCH-1 v	1 VJJ700033 ~ WJJ700036					<------	

----> Old replace New
<---> Interchangeable
* Please place an order assy(*)
<---- New replace Old
<-O-> Interchangeable with another part(s)
<-X-> Not interchangeable

https://tractormanualz.com/

TC2-G646506

BRAKE PEDAL GROUP

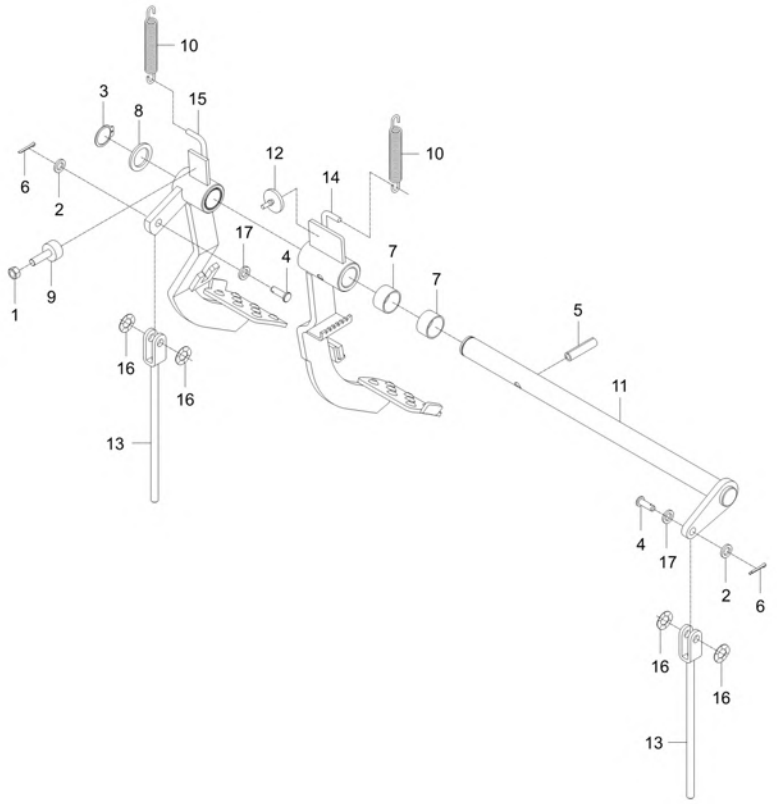

A : CK3510SEB

No.	Part Number	Description	Qty A	Qty B	Qty C	Qty D	Qty E	I.C	Remark
1	02156-50080	NUT v	1						M8XP1.25
2	T4930-66731	WASHER 1	2						
3	04612-00250	CIR-CLIP	1						
4	05122-51028	PIN, JOINT v	2						DIA10
5	05411-00840	PIN, SPRING	1						DIA8*40
6	05511-50318	PIN, SPLIT v	2						
7	08822-53017	NEEDLE BEARING	2						NTN,K25301 7
8	84612-1445-0	COLLAR	1						DIA36*8
9	T2350-55881	BOLT ADJUSTING	1						
10	T2350-55961	SPRING BRAKE	2						DIA2.3
11	T2610-55731	SHAFT, PEDAL	1						-
12	T4520-26931	CUSHION	1						
13	T4620-55762	ROD2,BRAKE	2						
14	TC26-1048A	PEDAL, BRAKE-LH	1						-
15	TC26-1049A	PEDAL, BRAKE-RH	1						-
16	T4157-56111	SPRING	4						
17	T4682-65311	WASHER 3	2						

----> Old replace New
<---> Interchangeable
* Please place an order assy(*)
<---- New replace Old
<-O-> Interchangeable with another part(s)
<-X-> Not interchangeable

https://tractormanualz.com/

TC2-G648005

ACCELERATOR GROUP

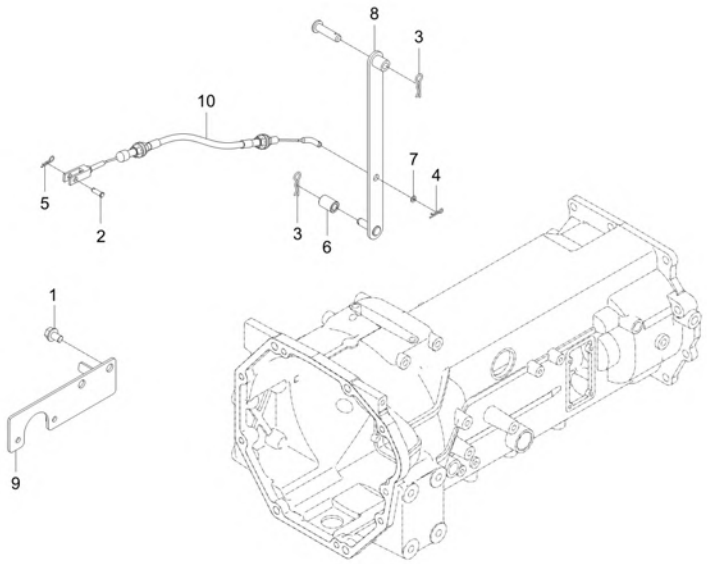

A : CK3510SEB

No.	Part Number	Description	Qty A	Qty B	Qty C	Qty D	Qty E	I.C	Remark
1	01754-50812	BOLT, FLANGE	2						M8XP1.25
2	05122-50616	PIN, JOINT	1						DIA6XL16
3	05515-50800	PIN, SNAP	2						M8
4	05525-50600	SNAP PIN	1						DIA6
5	05525-50600	SNAP PIN	1						DIA6
6	T2360-34142	USE T2360-34141	1						DIA14
7	T4930-66751	WASHER 3	1						
8	T5710-81071	ACCEL ROD, 2	1						N
9	T5815-55841	BRACKET	1						N
9	T5815-55842	BRACKET	1					<----->	-
10	TC26-0530A	CABLE, ACLTR-TIER4 dnr v	1						
10	TC26-0530B	CABLE, ACLTR-TIER4 v	1 UJJ700117 ~ WJJ700036					<------	

----> Old replace New
<---- New replace Old
<-X-> Not interchangeable
<---> Interchangeable
<-O-> Interchangeable with another part(s)
* Please place an order assy(*)

https://tractormanualz.com/

TC2-G648202

ACCELERATOR PEDAL GROUP

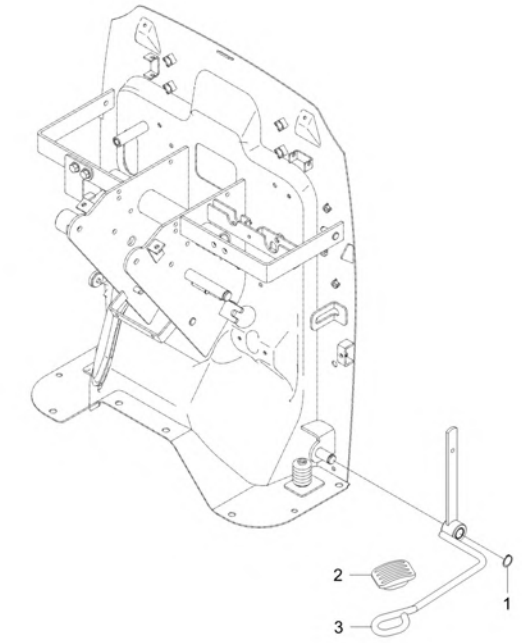

A : CK3510SEB

No.	Part Number	Description	Qty A	Qty B	Qty C	Qty D	Qty E	I.C	Remark
1	04612-00150	CIR CLIP, EXTERNAL	1						DIA15
2	T4620-70272	RUBBER, ACCEL PEDAL	1						
3	T5710-81041	PEDAL, ACCEL	1						-

----> Old replace New
<---- New replace Old
<-X-> Not interchangeable
<---> Interchangeable
<-O-> Interchangeable with another part(s)
* Please place an order assy(*)

https://tractormanualz.com/

TC2-G651004

STEERING WHEEL GROUP

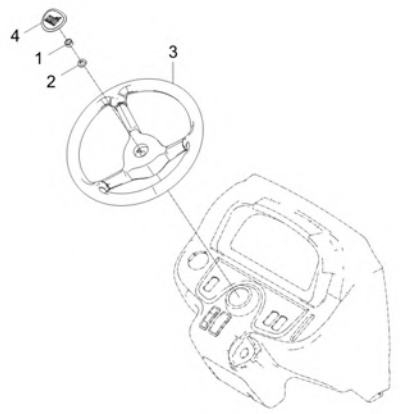

A : CK3510SEB

No.	Part Number	Description	Qty A	Qty B	Qty C	Qty D	Qty E	I.C	Remark
1	02176-50120	NUT	1						M12XP1.25
2	04512-50120	SPRING WASHER	1						M12
3	T2555-55462	STEERING WHEEL v	1						-
4	T5245-55461	CAP, HANDLE 3 sided v	1						
4	T5245-55462	CAP,HANDLE	1					<------	-

----> Old replace New
<---> Interchangeable
* Please place an order assy(*)
<---- New replace Old
<-O-> Interchangeable with another part(s)
<-X-> Not interchangeable

https://tractormanualz.com/

TC2-G653009

STEERING COLUMN GROUP

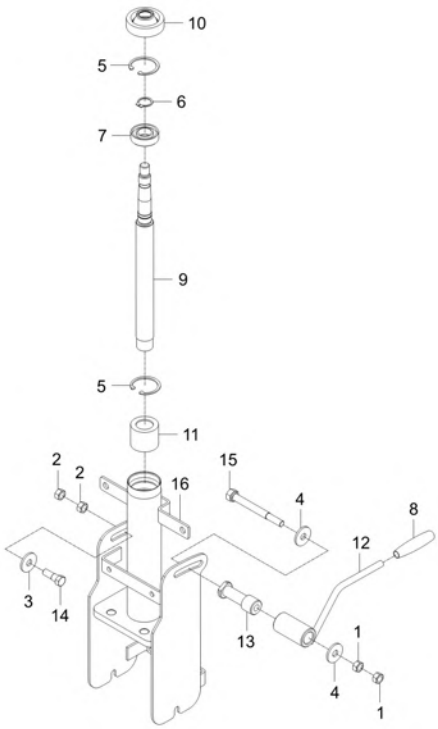

A : CK3510SEB

No.	Part Number	Description	Qty A	Qty B	Qty C	Qty D	Qty E	I.C	Remark
1	02156-50080	NUT v	2						M8XP1.25
2	02156-50080	NUT v	2						M8XP1.25
3	04015-50080	PLAIN WASHER	1						T2.6
4	04015-50080	PLAIN WASHER	2						T2.6
5	04611-00350	CIR CLIP, INTERNAL v	2						SK5M
6	04612-00170	CIR-CLIP	1						
7	08111-06003	BEARING, BALL dnr v	1						
8	T2185-71241	GRIP, DARK BLUE	1						
9	T2350-66101	SHAFT,STEERING	1						
10	T2440-16351	SEAL,OIL	1						
11	T4260-50100	RUBBER CUSHION	1						L3503, D4351
12	T5710-80841	LEVER, TILT	1						N
13	T5710-80852	BOLT, HOLDER	1						N
14	T5710-80861	BOLT	1						M8XP1.25
15	T5710-80871	BOLT	1						M8XP1.25
16	TC26-0495A	ASSY COLUMN, STEERING-US	1						

----> Old replace New
<---- New replace Old
<-X-> Not interchangeable
<---> Interchangeable
<-O-> Interchangeable with another part(s)
* Please place an order assy(*)

https://tractormanualz.com/

TC2-G654002

STEERING COLUMN COVER GROUP

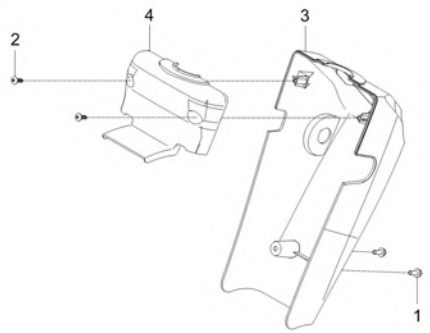

A : CK3510SEB

No.	Part Number	Description	Qty A	Qty B	Qty C	Qty D	Qty E	I.C	Remark
1	01754-50616	BOLT, FLANGE v	2						M6*P1.0
2	T4930-64301	SCREW	2						
3	T5710-81222	COVER dnr v	1						
3	T5710-81223	COVER v	1 VJJ700033 ~ WJJ700036					<------	
4	T5710-81232	COVER	1						

----> Old replace New
<---> Interchangeable
* Please place an order assy(*)
<---- New replace Old
<-O-> Interchangeable with another part(s)
<-X-> Not interchangeable

https://tractormanualz.com/

TC2-G655009

INSTRUMENT COVER GROUP

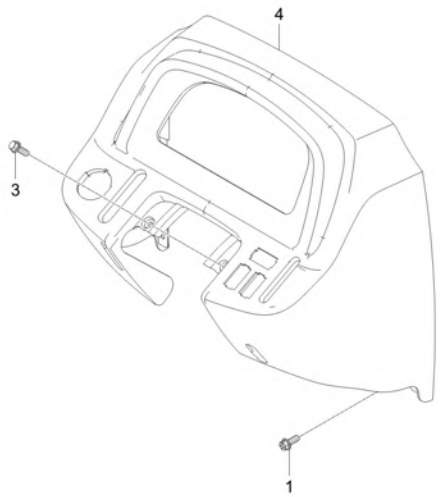

2

A : CK3510SEB

No.	Part Number	Description	Qty A	Qty B	Qty C	Qty D	Qty E	I.C	Remark
1	01205-50616	BOLT	2						M6*P1.0
2	38240-1883-1	TAPPING SCREW dnr v	2						M4X16
3	T4625-55441	BOLT FLANGE	2						
4	T5710-81213	INSTRUMENT COVER, UP v	1						-
4	T5710-81214	INSTRUMENT COVER, UP	1					<--O-->	-

----> Old replace New <---- New replace Old <-X-> Not interchangeable
<---> Interchangeable <-O-> Interchangeable with another part(s)
* Please place an order assy(*)

https://tractormanualz.com/

TC2-G661013

SEAT GROUP

(CK3510SEB : ~ VJJ700016)

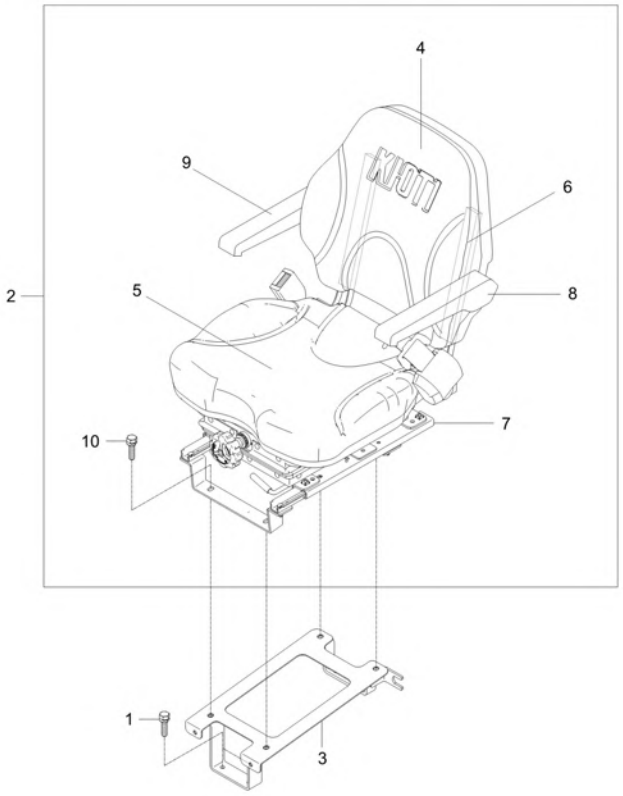

A : CK3510SEB

No.	Part Number	Description	Qty A	Qty B	Qty C	Qty D	Qty E	I.C	Remark
1	01754-50816	BOLT, FLANGE	12						M8XP1.25
2	TC26-1259A	ASSY SEAT-US dnr v	1 UJJ700001 ~ UJJ700116						
2	TC26-1259B	ASSY SEAT - US	1 UJJ700117 ~ VJJ700016					<------	
3	TC26-0538A	PLATE, SEAT FLOOR	1						-
4	T5715-52411001	BACK PAD ASSY	1						
5	T5715-52411002	CUSHION PAD ASSY	1						
6	TC26-1261A	ASSY BODY, FRAME	1						
7	TC26-1262A	ASSY SUSPENSION	1						
8	TC26-1263A	ASSY ARMREST LH	1						
9	TC26-1264A	ASSY ARMREST RH	1						
10	TC26-1265A	BOLT, FLANGE	4						

----> Old replace New
<---> Interchangeable
* Please place an order assy(*)
<---- New replace Old
<-O-> Interchangeable with another part(s)
<-X-> Not interchangeable

https://tractormanualz.com/

TC2-G662014

STEP MAT GROUP

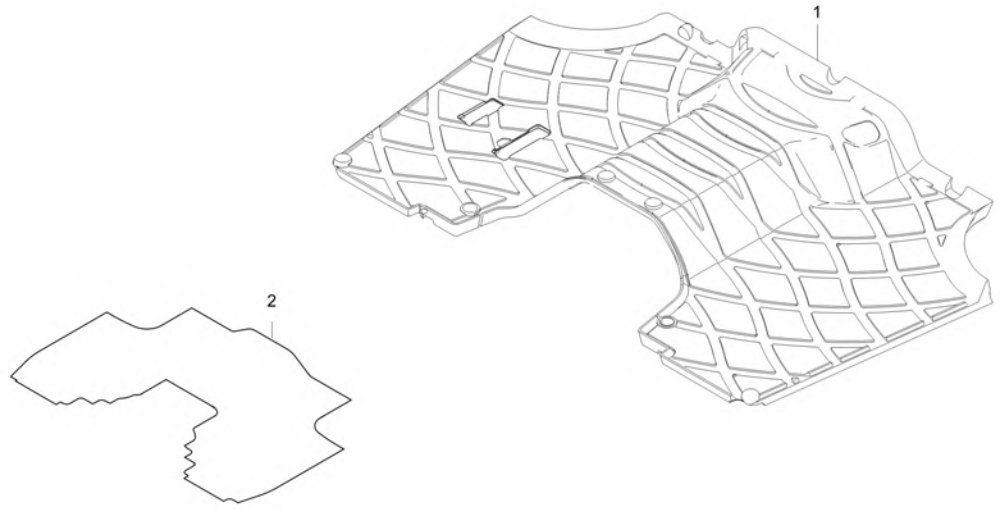

A : CK3510SEB

No.	Part Number	Description	Qty A	Qty B	Qty C	Qty D	Qty E	I.C	Remark
1	TC26-0951A	MAT, STEP-MEC	1						
2	T4125-70261	MAT	1						T0.4~0.5

----> Old replace New
<----> Interchangeable
* Please place an order assy(*)
<---- New replace Old
<-O-> Interchangeable with another part(s)
<-X-> Not interchangeable

https://tractormanualz.com/

TC2-G671007

FUEL TANK GROUP

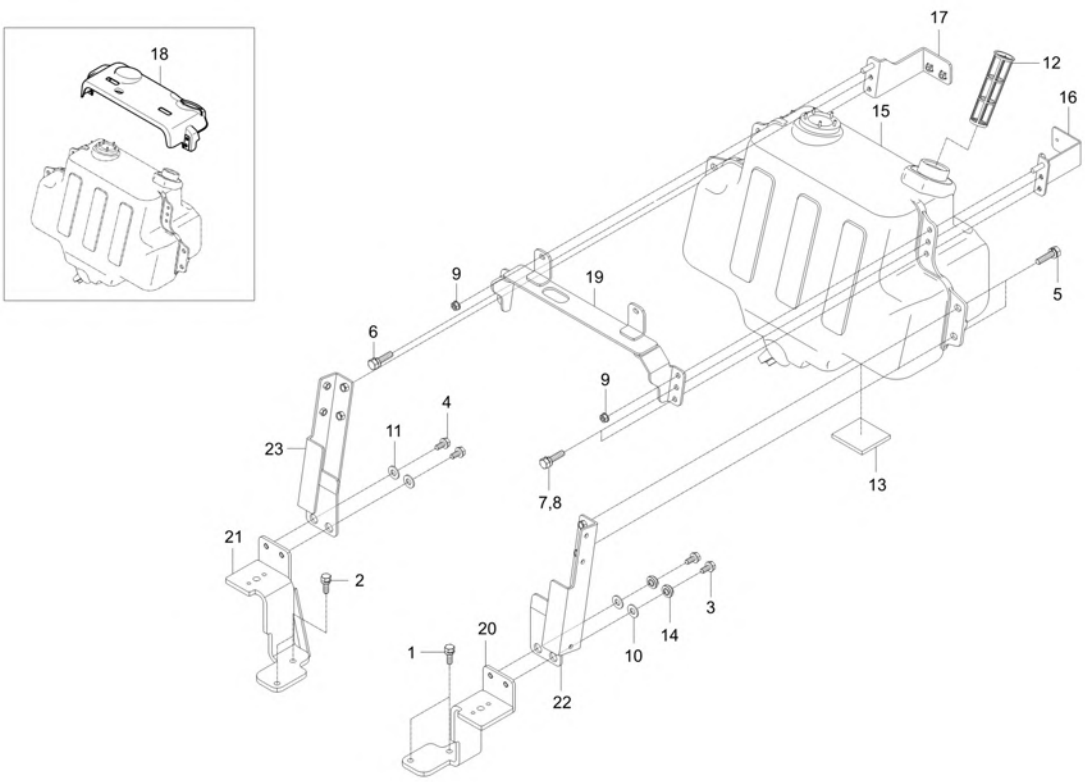

A : CK3510SEB

No.	Part Number	Description	Qty A	Qty B	Qty C	Qty D	Qty E	I.C	Remark
1	01133-51025	BOLT	2						M10XP1.25
2	01133-51025	BOLT	2						M10XP1.25
3	01133-51030	WITH WASHER BOLT	2 ~ VJJ700008						M10XP1.25
3	01133-51025	BOLT	2 VJJ700009 ~ WJJ700036					<----->	M10XP1.25
4	01133-51030	WITH WASHER BOLT	2						M10XP1.25
4	01133-51025	BOLT	2					<----->	M10XP1.25
5	01135-51025	BOLT WITH WASHER	4						M8*1.25
6	01754-50830	BOLT FLANGE	2						M8*P1.25
7	01754-50830	BOLT FLANGE	1						M8*P1.25
8	01754-50830	BOLT FLANGE	1						M8*P1.25
9	02763-50080	FLANGE NUT	2						M8XP1.25
10	04015-50100	WASHER, PLAIN	2						M10
11	04015-50100	WASHER, PLAIN	2						M10
12	T4686-41351	FILTER, FUEL	1						
13	T4810-55312	RUBBER, CUSHION v	1						
14	T5520-80531	BUSHING	4						
15	T5855-52213	FUEL TANK	1						-
16	T5855-52223	BRKT LH,FUEL TANK	1						-

----> Old replace New
<---- New replace Old
<-X-> Not interchangeable
<---> Interchangeable
<-O-> Interchangeable with another part(s)
* Please place an order assy(*)

https://tractormanualz.com/

TC2-G671007

FUEL TANK GROUP

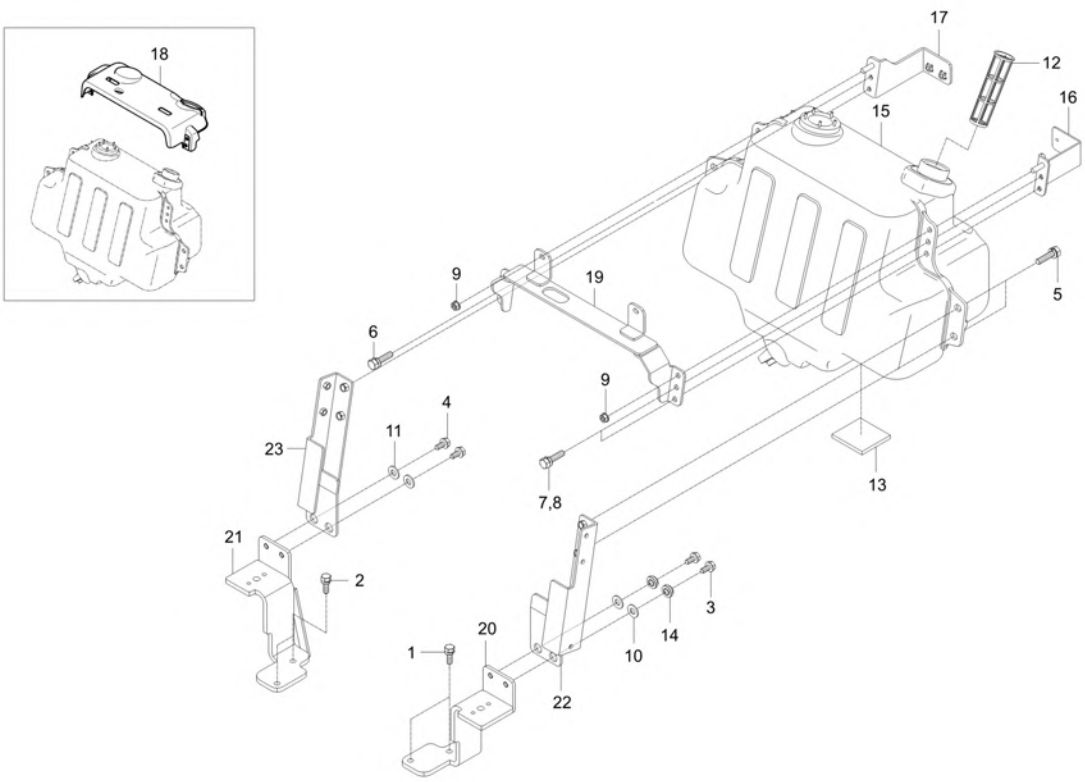

A : CK3510SEB

No.	Part Number	Description	Qty A	Qty B	Qty C	Qty D	Qty E	I.C	Remark
17	T5855-52233	BRACKET RH,FUEL TANK	1						-
18	T5858-52211	SHEILD,FUEL TANK	1						
19	TC26-0007B	BRACKET, NUMBER	1						
20	TC26-0740B	SUPPORT, FUEL TANK-LWR LH	1						
21	TC26-0743B	SUPPORT, FUEL TANK-LWR RH	1						
22	TC26-0746A	SUPPORT, FUEL TANK-UPR LH	1						
23	TC26-0749A	SUPPORT, FUEL TANK-UPR RH	1						

----> Old replace New
<----> Interchangeable
* Please place an order assy(*)
<---- New replace Old
<-O-> Interchangeable with another part(s)
<-X-> Not interchangeable

https://tractormanualz.com/

TC2-G672003

FUEL HOSE GROUP

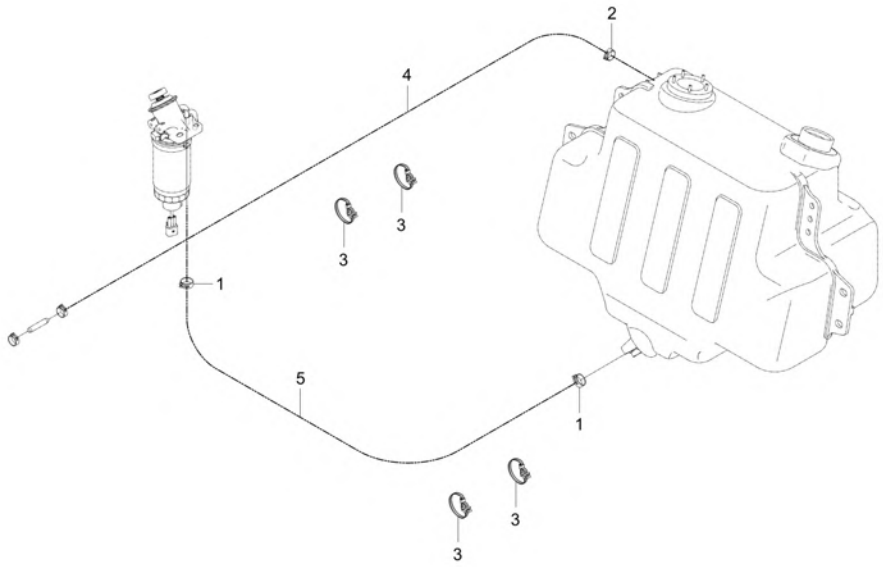

A : CK3510SEB

No.	Part Number	Description	Qty A	Qty B	Qty C	Qty D	Qty E	I.C	Remark
1	09318-88130	CLAMP, HOSE	2						
2	09318-88130	CLAMP, HOSE	1						
3	P5370-82551	BAND, CABLE	4						
4	T5855-52244	FUEL,HOSE	1 UJJ700001 ~ TJJ700002						OD14 / ID8
4	T5525-51022	HOSE 1, FUEL	1 TJJ700003 ~ WJJ700036					<------	OD13XID8
5	TC26-1052B	HOSE, FUEL	1						OD12.8 / ID7

----> Old replace New
<---- New replace Old
<-X-> Not interchangeable
<---> Interchangeable
<-O-> Interchangeable with another part(s)
* Please place an order assy(*)

https://tractormanualz.com/

TC2-G692015

DRAWBAR GROUP

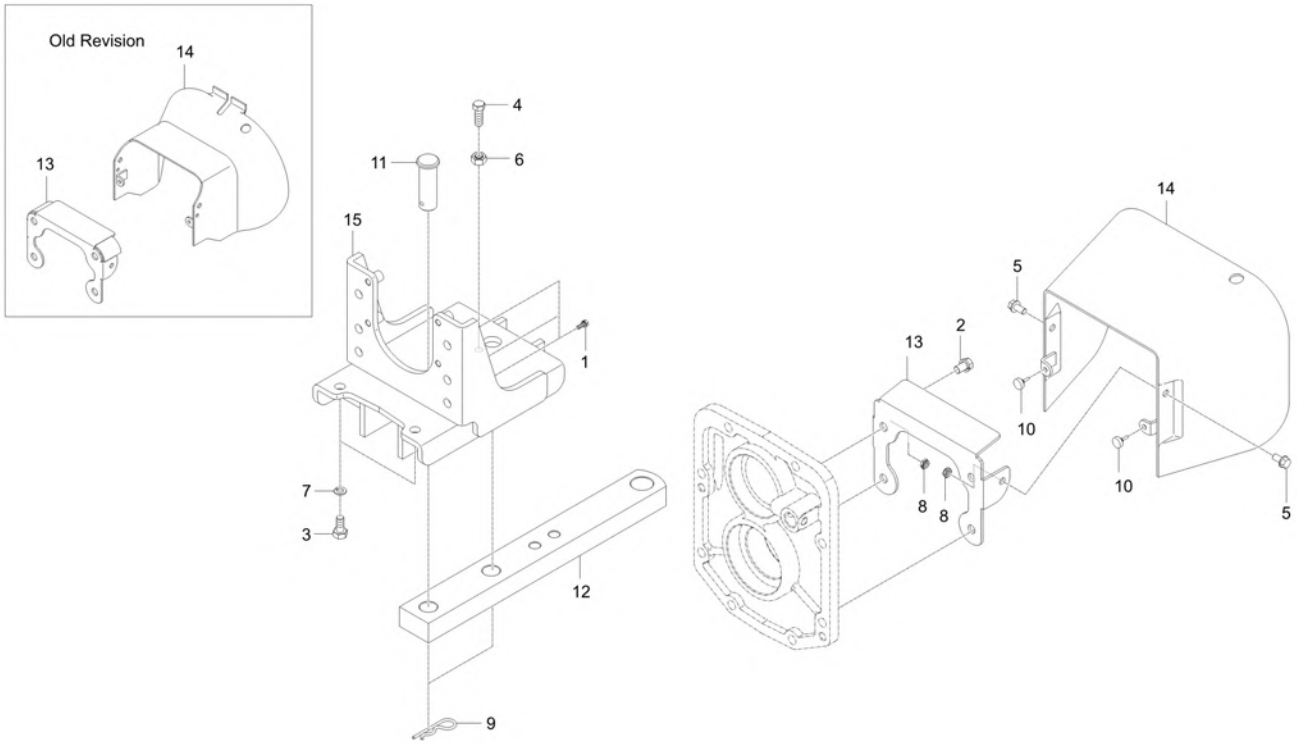

A : CK3510SEB

No.	Part Number	Description	Qty A	Qty B	Qty C	Qty D	Qty E	I.C	Remark
1	01133-51025	BOLT	6						M10XP1.25
2	01135-51030	BOLT, WASHER	4						M10XP1.25
3	01173-51430	BOLT	2						M14P1.5*30
4	01175-51030	BOLT	1						
5	01754-50816	BOLT, FLANGE	2						M8XP1.25
6	02176-50100	NUT v	1						M10XP1.25
7	04512-50140	SPRING WASHER	2						
8	41011-5151-4	NUT, LOCK (M8) v	2						
9	70515-1633-4	SNAP PIN	2						DIA5.0
10	K9100-50241	CHSSING	2						
11	T2445-29781	PIN,JOINT	2						DIA25
12	T2611-29731	DRAW BAR v	1						
13	T5715-55011	BRACKET	1						
13	TC26-1690A	BRACKET, PTO PROTECTION COVER	1 WJJ700001 ~ WJJ700036					<--O-->	T3.2
14	T5715-55021	COVER, PTO	1						
14	TC26-1689A	COVER, PTO PROTECTION	1 WJJ700001 ~ WJJ700036					<--O-->	
15	T5855-65913	DRAW BAR FRAME	1						-

----> Old replace New
<---- New replace Old
<-X-> Not interchangeable
<---> Interchangeable
<-O-> Interchangeable with another part(s)
* Please place an order assy(*)

https://tractormanualz.com/

TC2-G591004

BEACON LIGHT GROUP(OPTION)

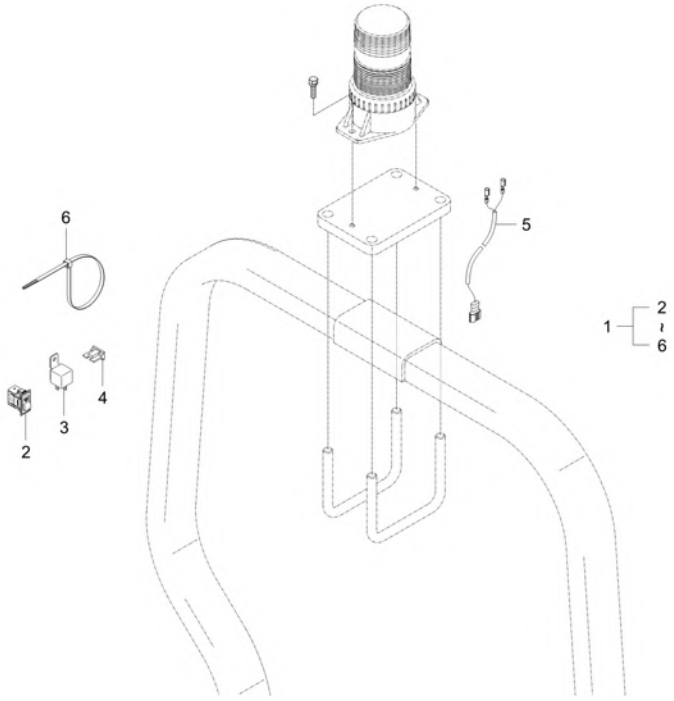

A : CK3510SEB

No.	Part Number	Description	Qty A	Qty B	Qty C	Qty D	Qty E	I.C	Remark
1	TC25-A0004A	BEACON LIGHT KIT	1						
2	T4931-67721	SWITCH, HAZARD v	1						
3	T5710-69971	RELAY 5P	1						
4	T5210-68682	FUSE 20A	1						20A(□|L| LPF)
5	T5268-69321	LAMP CONNECTION WIRE HARNESS	1						
6	T2185-82551	CABLE TIE, BLACK / 300	20						L290

----> Old replace New
<---> Interchangeable
* Please place an order assy(*)
<---- New replace Old
<-O-> Interchangeable with another part(s)
<-X-> Not interchangeable

https://tractormanualz.com/

TC2-G6F2005

TOOL BOX

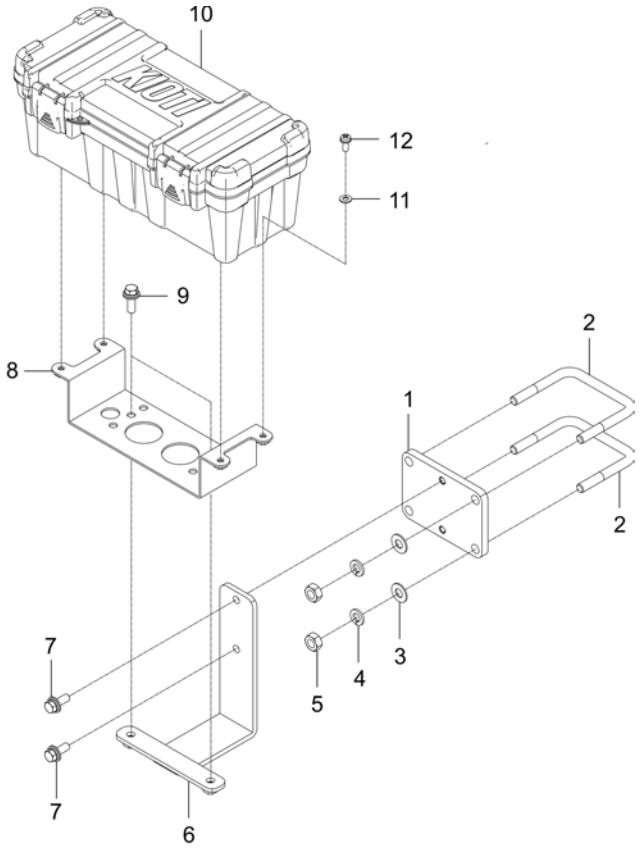

A : CK3510SEB

No.	Part Number	Description	Qty A	Qty B	Qty C	Qty D	Qty E	I.C	Remark
1	TC26-0075A	PLATE	1						T9.0
2	T5410-85121	Bolt - U Type (M8)	2						DIA10
3	04013-50100	PLAIN WASHER	4						M10
4	04512-50100	SPRING WASHER	4						M10
5	02018-50100	NUT	4						M10*P1.25
6	TC26-0073A	BRACKET, TOOL BOX	1						
7	01125-50818	BOLT, WASHER	2						M8P1.25
8	TC26-1432A	SUB ASSY BRACKET, TOOL BOX-LWR	1						
9	01125-50825	WITH WASHER BOLT	2						M8*1.25
10	TC26-1290A	BOX, TOOL	1						
11	04013-50060	PLAIN WASHER	4						M6
12	03004-50614	BOLT,SCREW	4						

----> Old replace New
<---- New replace Old
<-X-> Not interchangeable
<---> Interchangeable
<-O-> Interchangeable with another part(s)
* Please place an order assy(*)

https://tractormanualz.com/

TC2-G6G1001

SUNSHADE GROUP

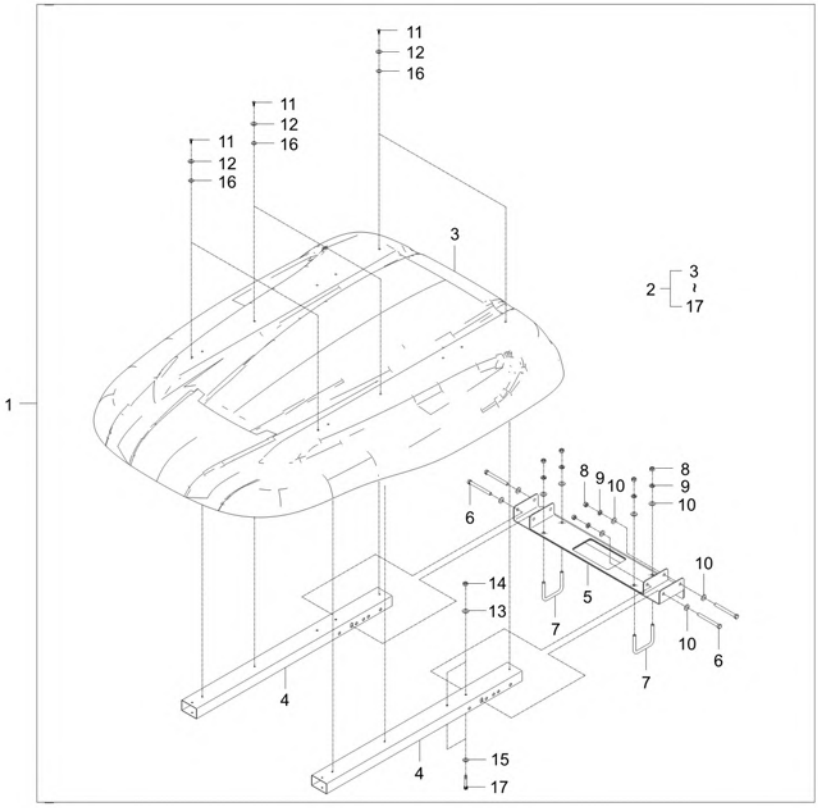

A : CK3510SEB

No.	Part Number	Description	Qty A	Qty B	Qty C	Qty D	Qty E	I.C	Remark
1	T5710-A5083	SUN VISOR KIT ASSY	1						
2	T5710-59603	ASSY SUNSHADE dnr v	1						
3	T5710-59612	SUNSHADE	1						T5.0
4	T5710-59622	PIPE	2						75x45xT1.6
5	T5710-59633	ASSY, SUPPORT	1						
6	T2185-85101004	BOLT dnr v	4						M10XP1.5
7	T2185-85101005	U BOLT v	2						M10XP1.5
8	02014-50100	NUT	8						M10XP1.5
9	04013-50100	PLAIN WASHER	12						M10
10	04512-50100	SPRING WASHER	8						M10
11	38240-1883-1	TAPPING SCREW dnr v	8						M4X16
12	04015-50050	WASHER, PLAIN	8						M5
13	04015-50060	WASHER, PLAIN	4						M6
14	02751-50060	NUT, FLANGE	4						M6XP1.0
15	04013-50060	PLAIN WASHER	4						M6
16	T4682-65301	WASHER 2	12						
17	01023-50665	BOLT, WASHER	4						MEX10*76

----> Old replace New
<----> Interchangeable
* Please place an order assy(*)
<---- New replace Old
<-O-> Interchangeable with another part(s)
<-X-> Not interchangeable

https://tractormanualz.com/

TC2-G6G3301

FRONT ROPS GROUP(OPT.-US)

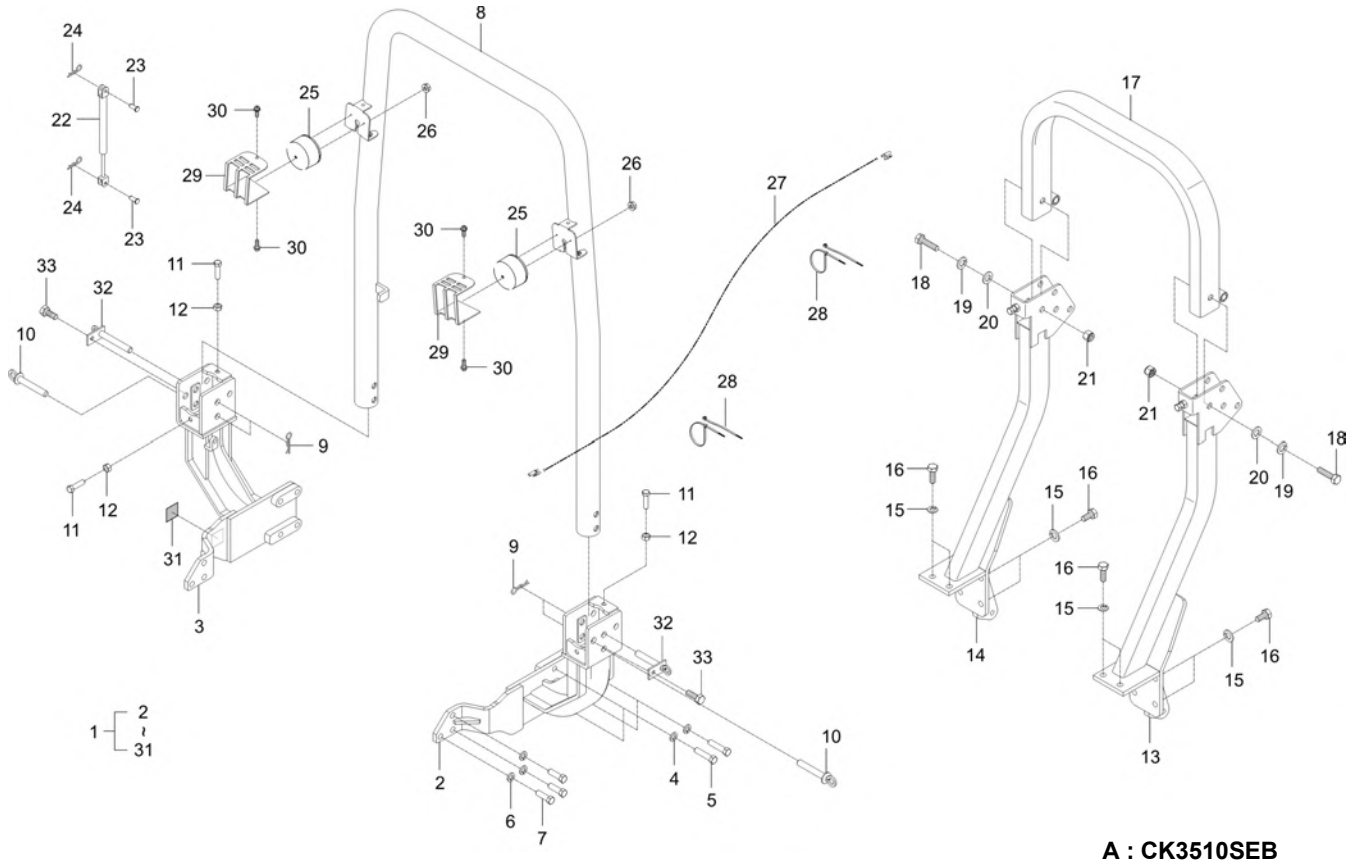

A : CK3510SEB

No.	Part Number	Description	Qty A	Qty B	Qty C	Qty D	Qty E	I.C	Remark
1	TC26-A0092A	FRONT ROPS KIT(US)	1						
1	TC26-A0092B	FRONT ROPS KIT(US)	1					<--O-->	
1	TC26-A0092C	FRONT ROPS KIT(US)	1					<----->	
1	TC26-A0092D	FRONT ROPS KIT(US)	1					<------	
2	TC26-0943B	SUPPORT, ROPS-LH	1						-
2	TC26-0943C	SUPPORT, ROPS-LH	1					<--O-->	-
3	TC26-0947B	SUPPORT, ROPS-RH	1						-
3	TC26-0947C	SUPPORT, ROPS- RH v	1					<--O-->	-
4	04512-50140	SPRING WASHER	8						
5	01173-51455	BOLT	8						M14P1.5*55
6	04512-50140	SPRING WASHER	6						
7	01173-51435	BOLT v	6						M14XP1.5
8	TC26-1569A	ASSY ROPS-FR US	1						-
9	05515-51600	PIN, SNAP	4 ~ VJJ700016						
9	05515-51600	PIN, SNAP	2					<--O-->	
10	T5738-55291	PIN	4						N
10	T5738-55291	PIN	2					<--O-->	N
11	T5710-55311	BOLT	4						M12XP1.75

----> Old replace New
<---> Interchangeable
* Please place an order assy(*)
<---- New replace Old
<-O-> Interchangeable with another part(s)
<-X-> Not interchangeable

https://tractormanualz.com/

TC2-G6G3301

FRONT ROPS GROUP(OPT.-US)

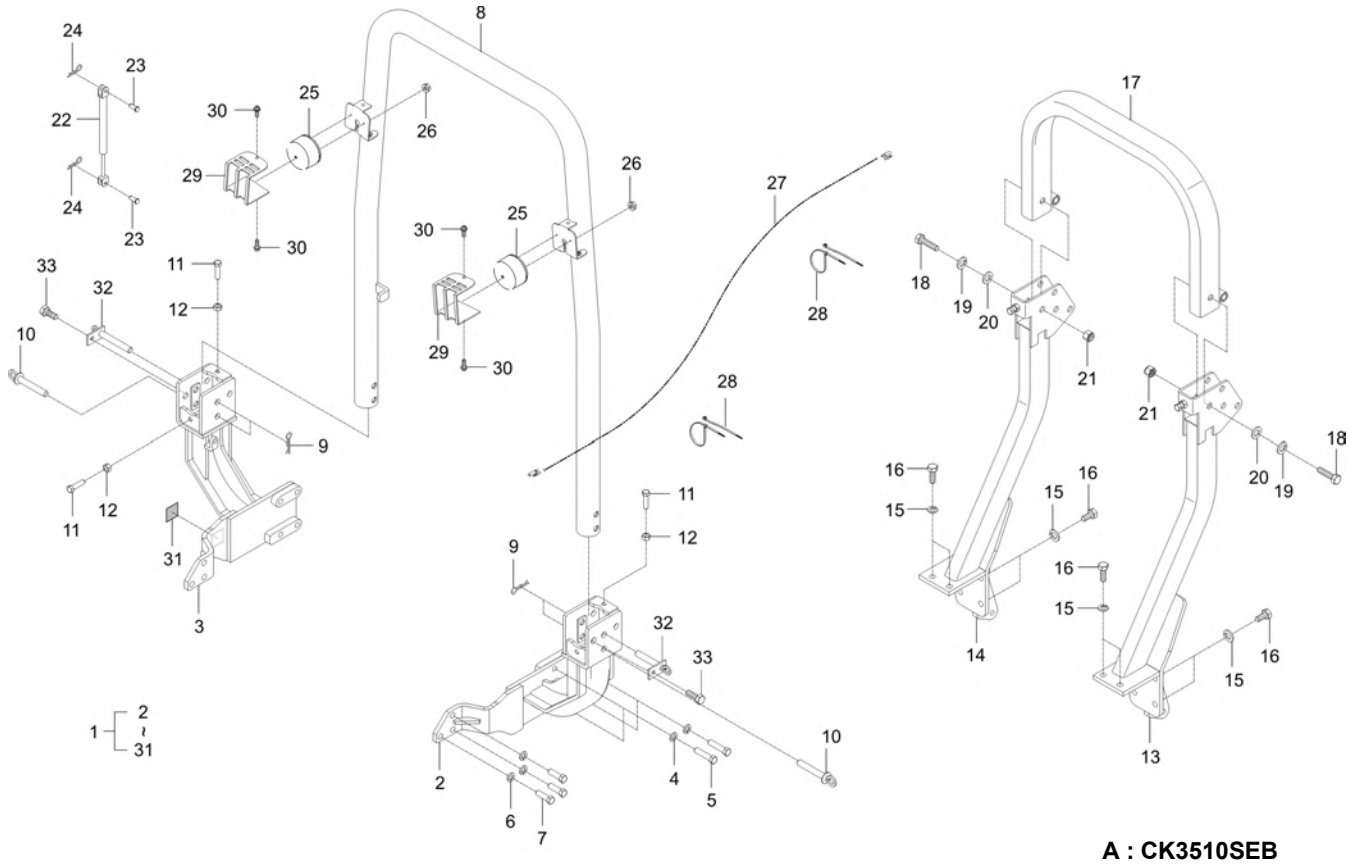

A : CK3510SEB

No.	Part Number	Description	Qty A	Qty B	Qty C	Qty D	Qty E	I.C	Remark
12	02114-50120	NUT	4						M12*P1.75
13	TC26-1315A	SUPPORT, ROPS-LH	1						
14	T5810-66834	SUPPORT,RH	1						
15	04512-50140	SPRING WASHER	12						
16	T2230-85242	BOLT	12						M14*2.0*32
17	TC26-0948A	ASSY ROPS dnr v	1						-
17	TC26-0948B	ASSY ROPS v	1					<----->	-
18	01173-51690	BOLT	4						
19	04512-50160	WASHER, SPRING	4						M16
20	04011-50160	PLAIN WASHER	8						M16
21	T2181-97191	SELF LOCK NUT(M16)	4						
22	T5855-51881	ASS'Y, AIR CYLINDER	1						
23	05122-51025	JOINT PIN	2						DIA10*25
23	05122-51025	JOINT PIN	1					<------	DIA10*25
24	05515-51000	Split Pin	2						DIA10
25	TD25-0052A	ASSY LAMP, TURN SIGNAL	2						
26	02751-50050	FLANGE NUT	4						
27	TC25-0099A	WIRE HARNESS, CONNECTING DIRECTION LAMP	2						

----> Old replace New
<---- New replace Old
<-X-> Not interchangeable
<---> Interchangeable
<-O-> Interchangeable with another part(s)
* Please place an order assy(*)

https://tractormanualz.com/

TC2-G6G3301

FRONT ROPS GROUP(OPT.-US)

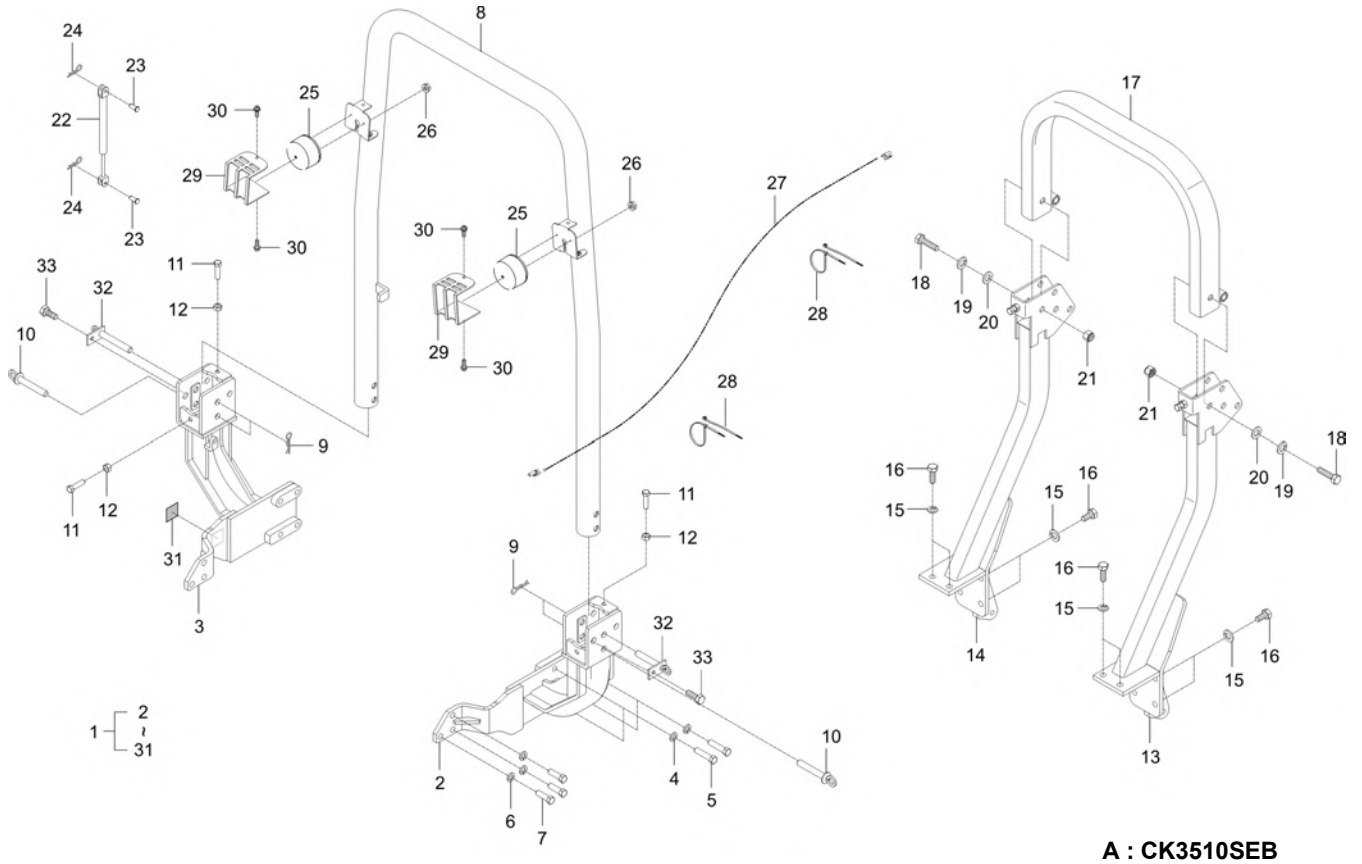

A : CK3510SEB

No.	Part Number	Description	Qty A	Qty B	Qty C	Qty D	Qty E	I.C	Remark
28	T2185-82551	CABLE TIE, BLACK / 300	10						L290
29	TC26-1573A	BRACKET, COVER	2						T3.2
30	01205-50616	BOLT	6						M6*P1.0
31	TC26-1570A	LABEL, ROPS-ISO 12003-1	1						T0.5
32	TB16-0127B	FIXED PIN	2						
33	01123-50816	Hex Head Cap Screw	2						M8XP1.25
34	05122-51028	PIN, JOINT v	1						DIA10
35	T4682-65311	WASHER 3	1						
36	04013-50100	PLAIN WASHER	1						M10

----> Old replace New
<----> Interchangeable
* Please place an order assy(*)
<---- New replace Old
<-O-> Interchangeable with another part(s)
<-X-> Not interchangeable

https://tractormanualz.com/

TC2-G6G4101

ARM REST GROUP(OPTION)

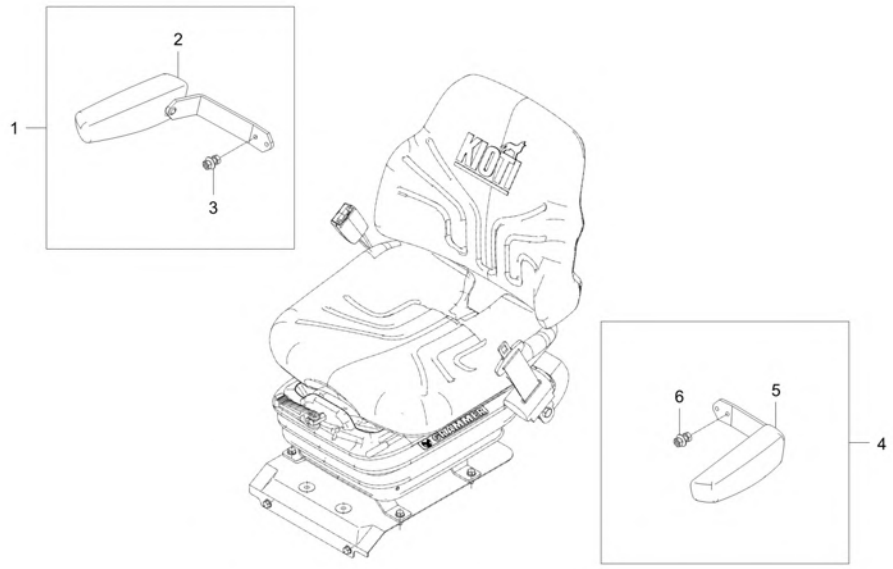

A : CK3510SEB

No.	Part Number	Description	Qty A	Qty B	Qty C	Qty D	Qty E	I.C	Remark
1	TC26-A0113A	KIT, ARMREST-RH	1						
2	TC26-1782A	ARMREST-RH CPL	1						
3	TC26-1791A	FASTENER-ARMREST CPL	1						
4	TC26-A0114A	KIT, ARMREST-LH	1						
5	TC26-1783A	ARMREST-LH CPL	1						
6	TC26-1791A	FASTENER-ARMREST CPL	1						

----> Old replace New
<----> Interchangeable
* Please place an order assy(*)
<---- New replace Old
<-O-> Interchangeable with another part(s)
<-X-> Not interchangeable

https://tractormanualz.com/

TC2-G632002

FRONT ROPS GROUP(OPTION)

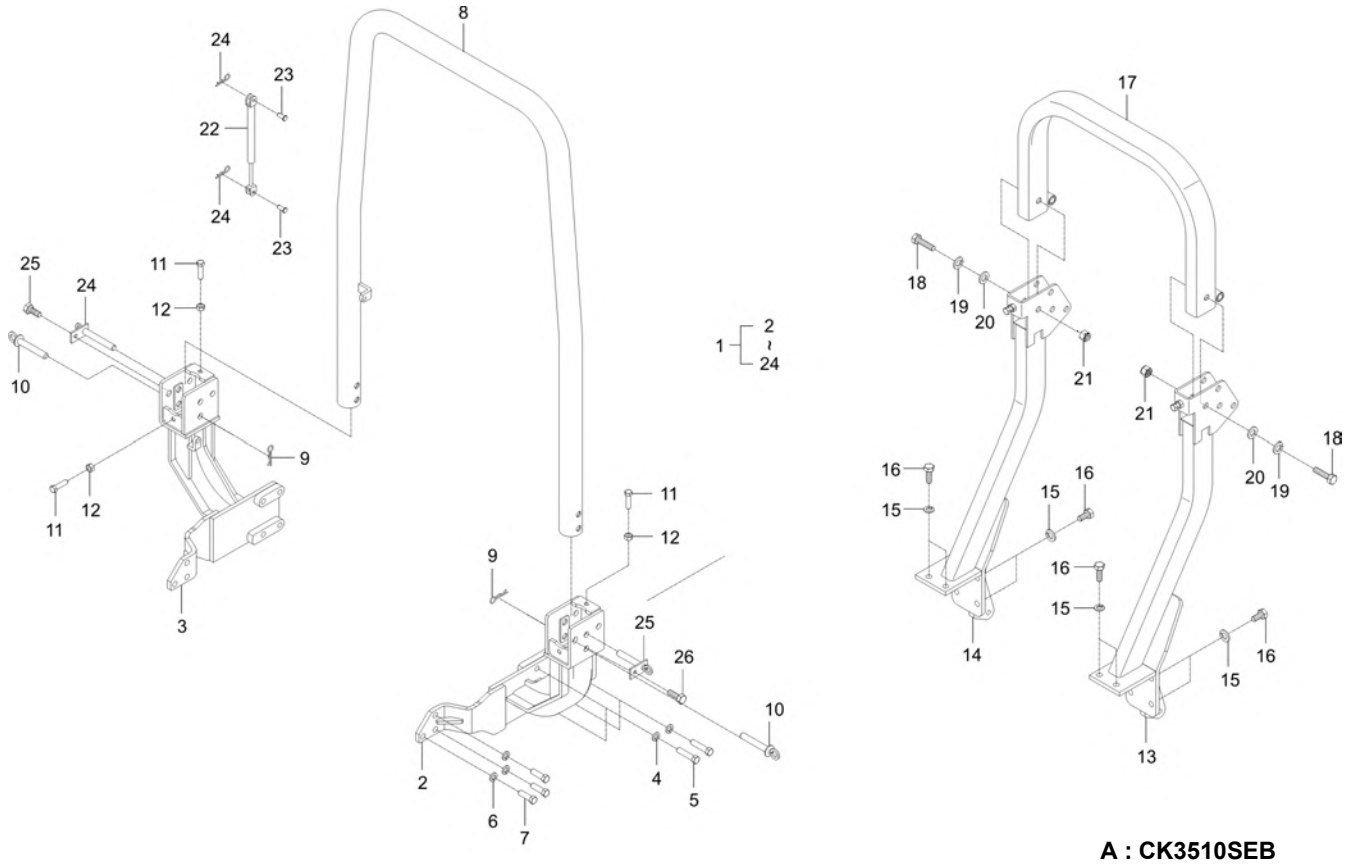

A : CK3510SEB

No.	Part Number	Description	Qty A	Qty B	Qty C	Qty D	Qty E	I.C	Remark
1	TC26-A0060A	FRONT ROPS KIT	1						
1	TC26-A0060B	FRONT ROPS KIT	1					<--O-->	
1	TC26-A0060C	FRONT ROPS KIT	1					<----->	
2	TC26-0943B	SUPPORT, ROPS-LH	1						-
2	TC26-0943C	SUPPORT, ROPS-LH	1					<--O-->	-
3	TC26-0947B	SUPPORT, ROPS-RH	1						-
3	TC26-0947C	SUPPORT, ROPS- RH v	1					<--O-->	-
4	04512-50140	SPRING WASHER	8						
5	01173-51455	BOLT	8						M14P1.5*55
6	04512-50140	SPRING WASHER	6						
7	01173-51435	BOLT v	6						M14XP1.5
8	TC26-1187B	ASSY ROPS	1						-
9	05515-51600	PIN, SNAP	4						
9	05515-51600	PIN, SNAP	2					<--O-->	
10	T5738-55291	PIN	4						N
10	T5738-55291	PIN	2					<--O-->	N
11	T5710-55311TP	BOLT	4						M12XP1.75
12	02114-50120	NUT	4						M12*P1.75

----> Old replace New
<---- New replace Old
<-X-> Not interchangeable
<---> Interchangeable
<-O-> Interchangeable with another part(s)
* Please place an order assy(*)

https://tractormanualz.com/

TC2-G632002

FRONT ROPS GROUP(OPTION)

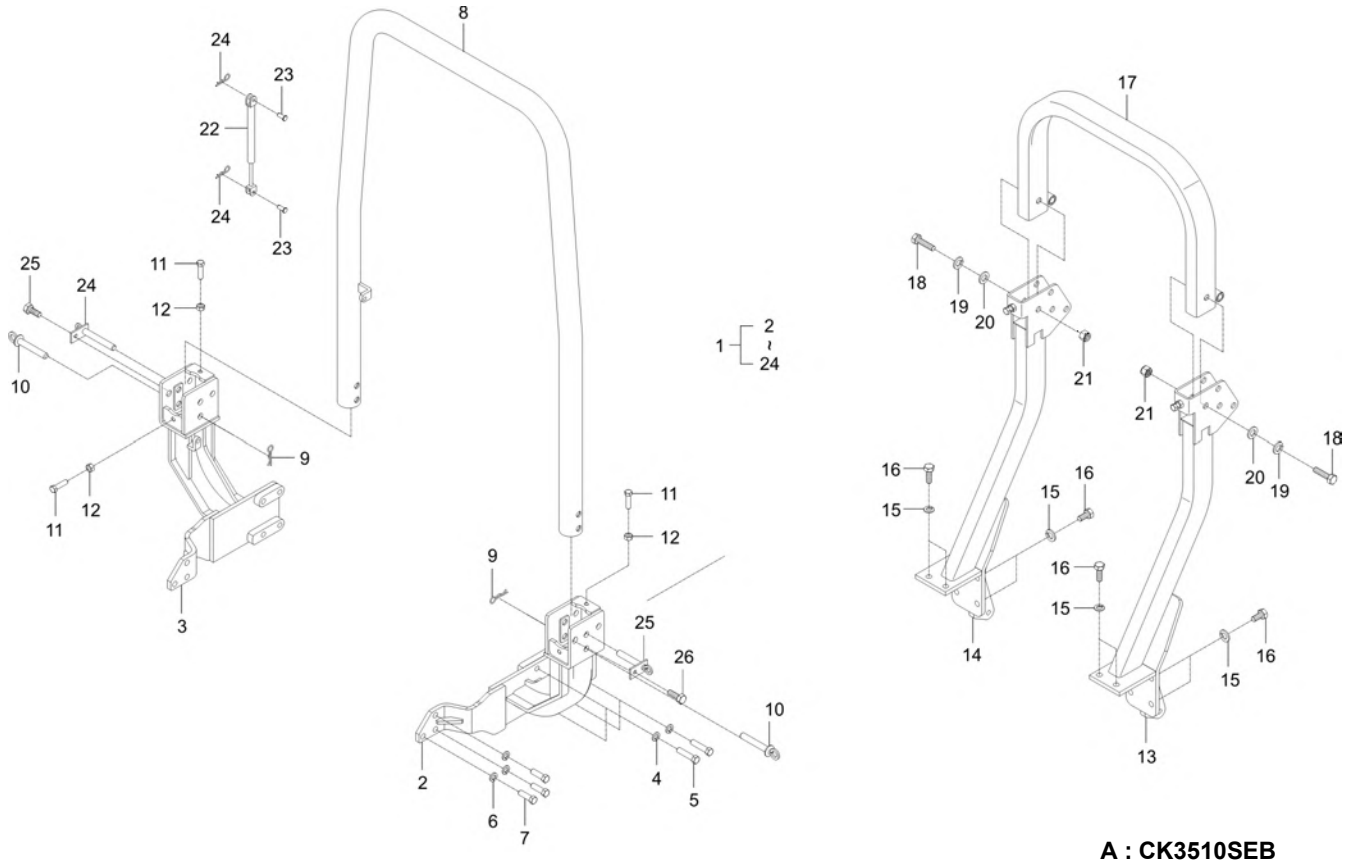

A : CK3510SEB

No.	Part Number	Description	Qty A	Qty B	Qty C	Qty D	Qty E	I.C	Remark
13	TC26-1315A	SUPPORT, ROPS-LH	1						
14	T5810-66834	SUPPORT,RH	1						
15	04512-50140	SPRING WASHER	12						
16	T2230-85242	BOLT	12						M14*2.0*32
17	TC26-0948A	ASSY ROPS dnr v	1						-
17	TC26-0948B	ASSY ROPS v	1					<----->	-
18	01173-51690	BOLT	4						
19	04512-50160	WASHER, SPRING	4						M16
20	04011-50160	PLAIN WASHER	8						M16
21	T2181-97191	SELF LOCK NUT(M16)	4						
22	T5855-51881	ASS'Y, AIR CYLINDER	1						
23	05122-51025	JOINT PIN	2						DIA10*25
24	05515-51000	Split Pin	2						DIA10
25	TB16-0127B	FIXED PIN	2						
26	01123-50816	Hex Head Cap Screw	2						M8XP1.25

----> Old replace New
<----> Interchangeable
* Please place an order assy(*)
<---- New replace Old
<-O-> Interchangeable with another part(s)
<-X-> Not interchangeable

https://tractormanualz.com/

TC2-G6G0803 MID PTO LEVER GROUP(IND. PTO)

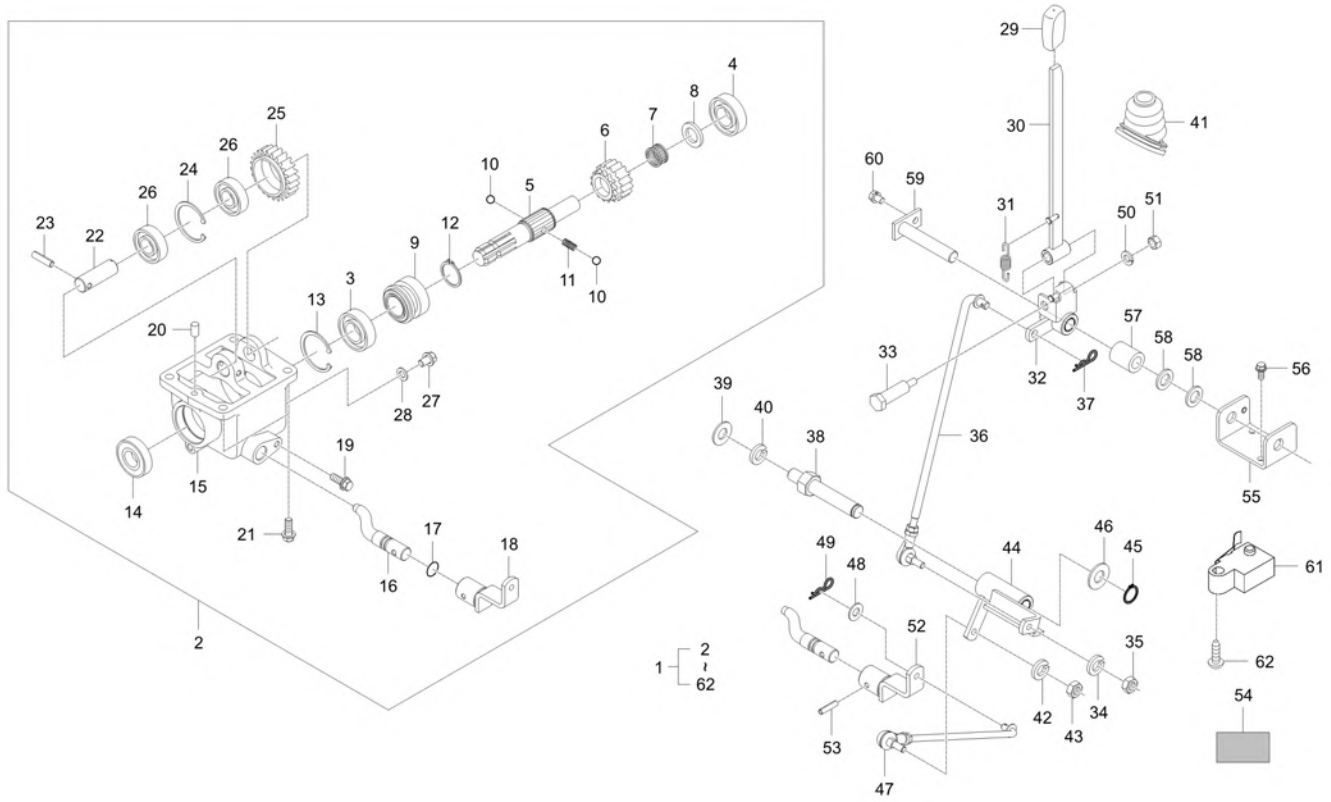

A : CK3510SEB

No.	Part Number	Description	Qty A	Qty B	Qty C	Qty D	Qty E	I.C	Remark
1	TC26-A0082A	KIT, MID PTO	1						
1	TC26-A0082B	KIT, MID PTO	1					<--O-->	
1	TC26-A0082C	KIT, MID PTO	1					<------	
1	TC26-A0082D	KIT, MID PTO	1					<------	
1	TC26-A0082E	KIT, MID PTO	1					<----->	
1	TC26-A0082F	KIT, MID PTO	1					<----->	
2	T5815-24102	MID PTO KIT	1						
2	T5815-24103	MID PTO KIT	1					<----->	
3	08101-06205	BEARING BALL dnr v	1						DIA25
4	08101-06304	BALL BEARING	1						#6304
5	T5815-24121	SHAFT, MID PTO	1						
6	T5815-24161	GEAR 17	1						
7	08822-53017	NEEDLE BEARING	1						NTN,K25301 7
8	31365-2278-1	COLLAR	1						
9	T5815-24142	SHIFTER	1						
10	07715-01605	BALL,STEEL	2						5/16"
11	T2440-44251	SPRING	1						DIA1.4
12	38430-2554-1	RING, SNAP	1						

----> Old replace New <---- New replace Old <-X-> Not interchangeable
<---> Interchangeable <-O-> Interchangeable with another part(s)
* Please place an order assy(*)

https://tractormanualz.com/

TC2-G6G0803 MID PTO LEVER GROUP(IND. PTO)

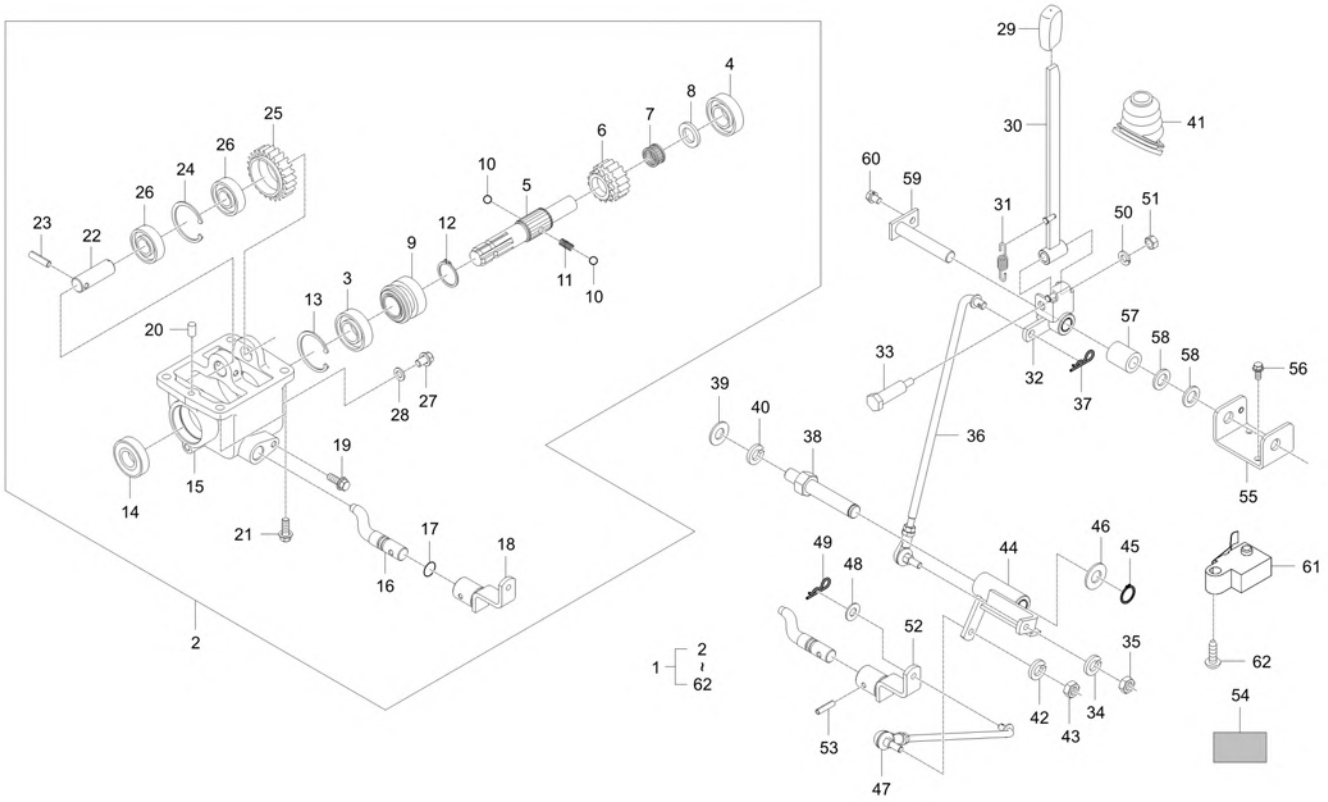

A : CK3510SEB

No.	Part Number	Description	Qty A	Qty B	Qty C	Qty D	Qty E	I.C	Remark
13	04611-00520	SNAP RING	1						
14	09502-55210	SEAL OIL v	1						DIA25
15	T5815-24114	CASE, MID PTO	1						
16	T5815-24232	ARM, SHIFT MID PTO	1						
17	04811-00140	O RING	1						
18	T2555-23331	STOPPER	1						
19	01754-50812	BOLT, FLANGE	1						M8XP1.25
20	05012-00818	PIN, PARALLEL	2						
21	01133-51030	WITH WASHER BOLT	4						M10XP1.25
22	T5815-24131	SHAFT, COUNTER MID PTO	1						
23	05411-00645	PIN,SPRING	1						
24	04611-00470	RING,SNAP	1						
25	T5815-24151	GEAR 24	1						
26	08101-06204	BALL BEARING	2						#6204
26	U3210-06204	BALL BEARING	2					<----->	6204
27	06331-35010	PLUG	1						M6*P1.0
28	04717-01000	WASHER, SEAL	1						M10
29	T2350-25871	GRIP A	1						

----> Old replace New <---- New replace Old <-X-> Not interchangeable
<---> Interchangeable <-O-> Interchangeable with another part(s)
* Please place an order assy(*)

https://tractormanualz.com/

TC2-G6G0803 MID PTO LEVER GROUP(IND. PTO)

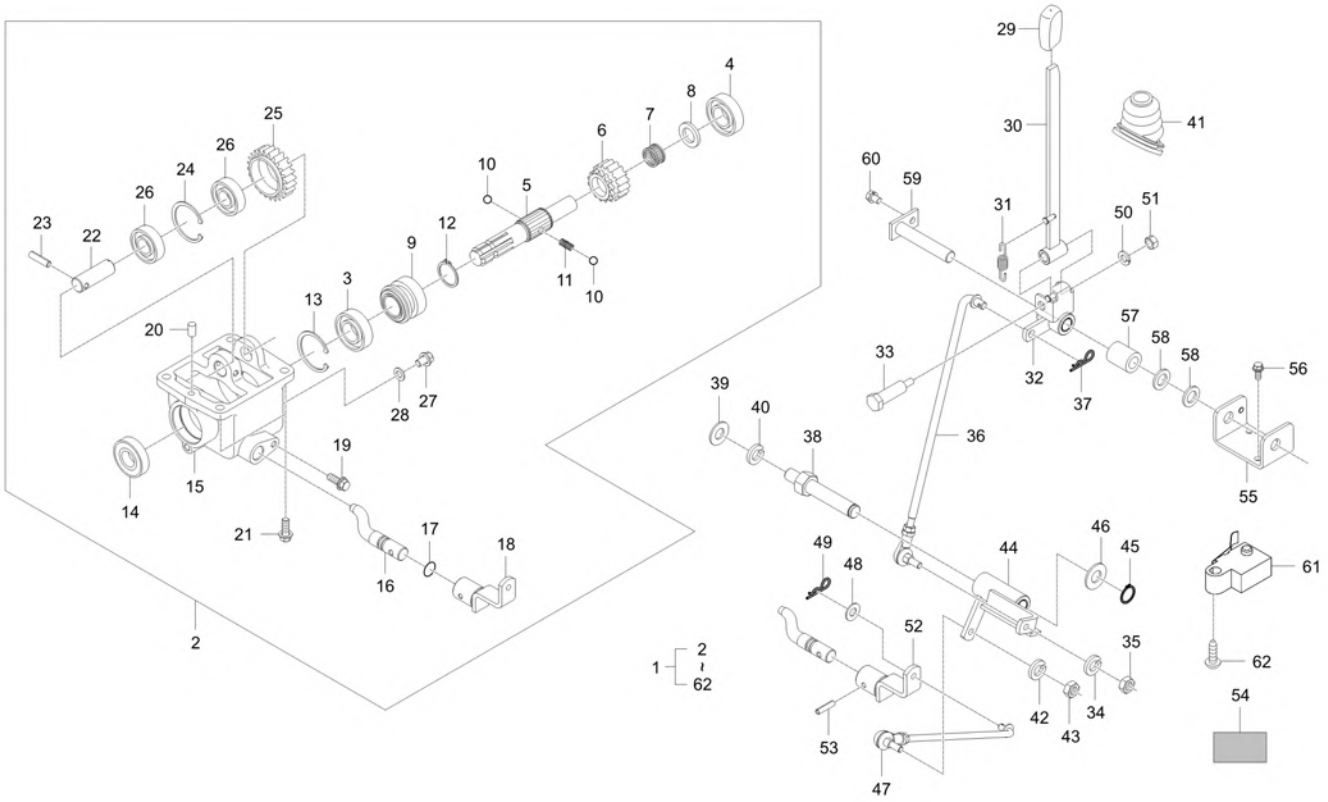

A : CK3510SEB

No.	Part Number	Description	Qty A	Qty B	Qty C	Qty D	Qty E	I.C	Remark
30	TC26-0511A	LEVER, MID PTO	1						
30	TC26-1704A	LEVER, MID PTO-USB CONSOLE	1					<--O-->	
31	T4157-51211	SPRING, RETURN	1						
32	TC26-0513B	BRACKET, HINGE BONNET-MID PTO	1						
32	TC26-0513C	BRACKET, HINGE BONNET-MID PTO	1					<----->	
33	T4182-60082	SHAFT	1						육각봉 17
34	04512-50080	SPRING WASHER	1						M08
35	02156-50080	NUT v	1						M8XP1.25
36	TC26-0512A	ROD, MID PTO	1						
37	05525-51000	PIN, SNAP	1						
38	T2185-24283	SHAFT(PTO)	1						HEX27
39	04011-50160	PLAIN WASHER	1						M16
40	04512-50160	WASHER, SPRING	1						M16
41	T4115-65681	BOOT	1						
42	04512-50080	SPRING WASHER	1						M08
43	02156-50080	NUT v	1						M8XP1.25
44	TC26-0514A	ARM, CONNECTING-2	1						
45	04612-00180	SNAP RING	1						

----> Old replace New <---- New replace Old <-X-> Not interchangeable
<---> Interchangeable <-O-> Interchangeable with another part(s)
* Please place an order assy(*)

https://tractormanualz.com/

TC2-G6G0803

MID PTO LEVER GROUP(IND. PTO)

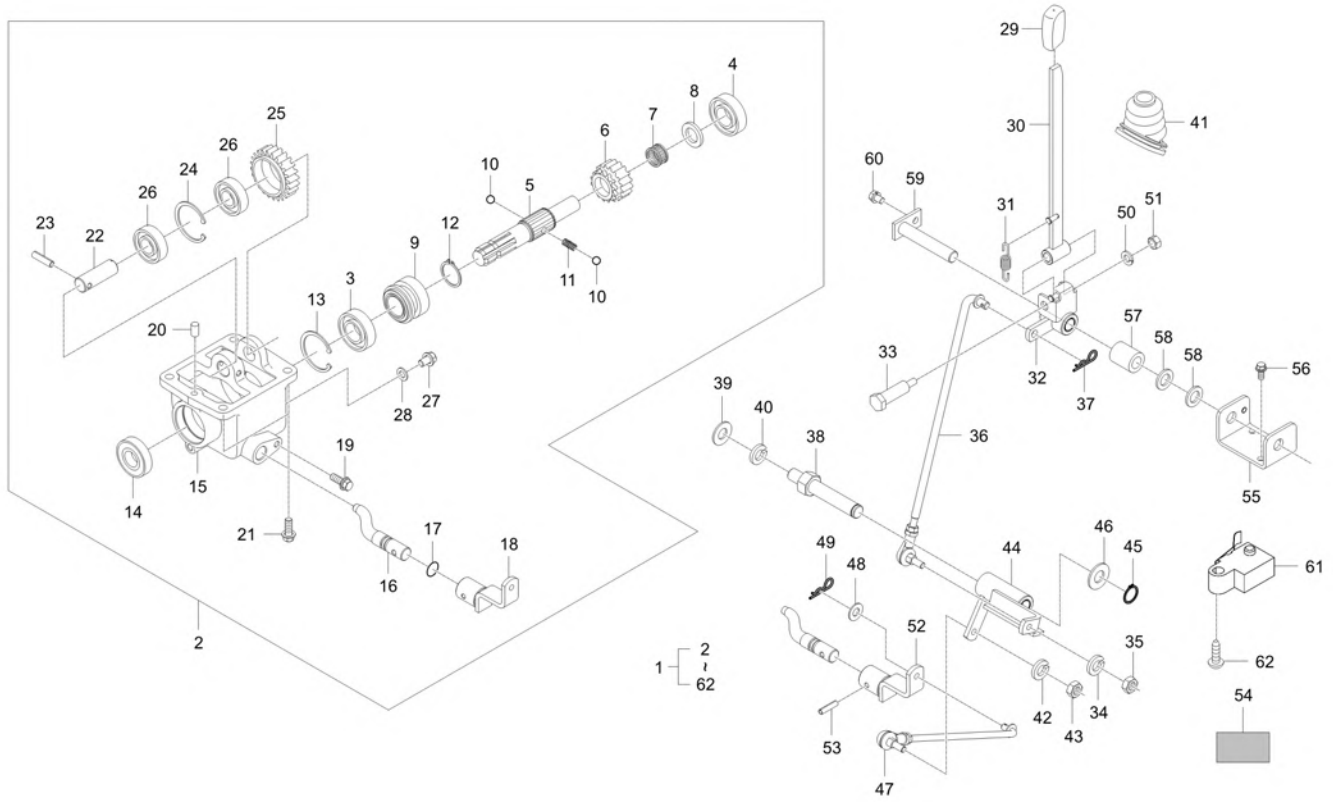

A : CK3510SEB

No.	Part Number	Description	Qty A	Qty B	Qty C	Qty D	Qty E	I.C	Remark
46	04011-50180	PLAIN WASHER	1						T2.9
47	TC26-1081A	ROD-MID PTO 2	1						
48	04014-50080	WASHER, PLAIN	1						
49	05525-50800	PIN, SNAP	1						DIA8
50	04512-50080	SPRING WASHER	1						M08
51	02156-50080	NUT v	1						M8XP1.25
52	T5855-58451	ARM, MID PTO	1						
53	05411-00630	PIN, SPRING	1						DIA6*30
54	TC26-1092A	LABEL, MID PTO	1						
55	TC26-0473A	BRACKET, PTO	1						T4.5
56	01754-50816	BOLT, FLANGE	2						M8XP1.25
57	T5715-53471	BUSHING	1						OD28,ID16.5
58	T4810-66721	WASHER	2						N
59	T4835-66532	SHAFT	1						
60	01123-50812	BOLT	1						M8P1.25
61	C7140-68811	SWTICH, MICRO NC	1						
62	38240-1883-1	TAPPING SCREW dnr v	1						M4X16

----> Old replace New <---- New replace Old <-X-> Not interchangeable
<---> Interchangeable <-O-> Interchangeable with another part(s)
* Please place an order assy(*)

https://tractormanualz.com/

TC2-G6G1501

FRONT WEIGHT GROUP

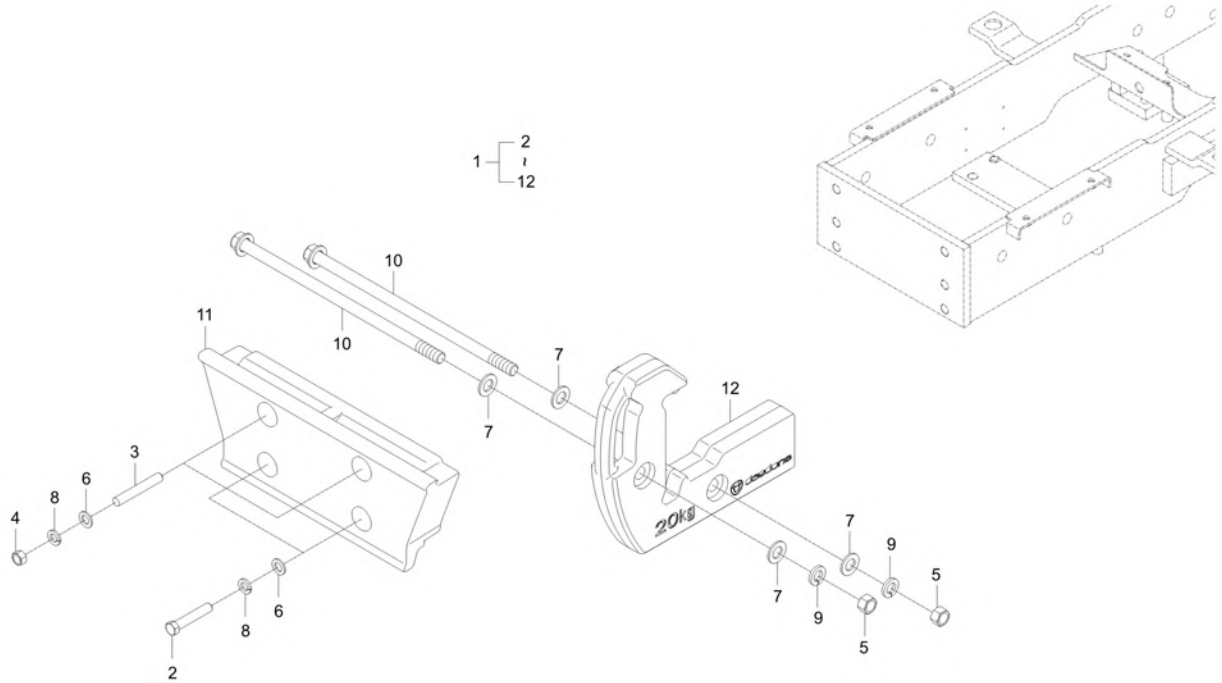

A : CK3510SEB

No.	Part Number	Description	Qty A	Qty B	Qty C	Qty D	Qty E	I.C	Remark
1	T5710-A5022	WEIGHT KIT	1						
1	T5710-A5023	WEIGHT KIT	1					<------	
2	01173-51475	BOLT	2						M14*P1.5*75
3	01517-51475	STUD	2						
4	02176-50140	NUT	2						M14XP1.5
5	02176-50180	NUT	2						
6	04011-50140	WASHER, PLAIN	4						T2.6
7	04014-50180	WASHER, PLAIN	4						
8	04512-50140	SPRING WASHER	4						
9	04512-50180	WASHER, SPRING	2						M18
10	T4875-85501	BOLT	2						
11	T5710-90021	SUPPORT, WEIGHT	1						N
12	T5710-90031	WEIGHT dnr v	8						N
12	T5710-90032	WEIGHT, FRONT END	8					<------	-

----> Old replace New <---- New replace Old <-X-> Not interchangeable
<---> Interchangeable <-O-> Interchangeable with another part(s)
* Please place an order assy(*)

https://tractormanualz.com/

TC2-G6G2501

LIFT ROD GROUP(OPTION)

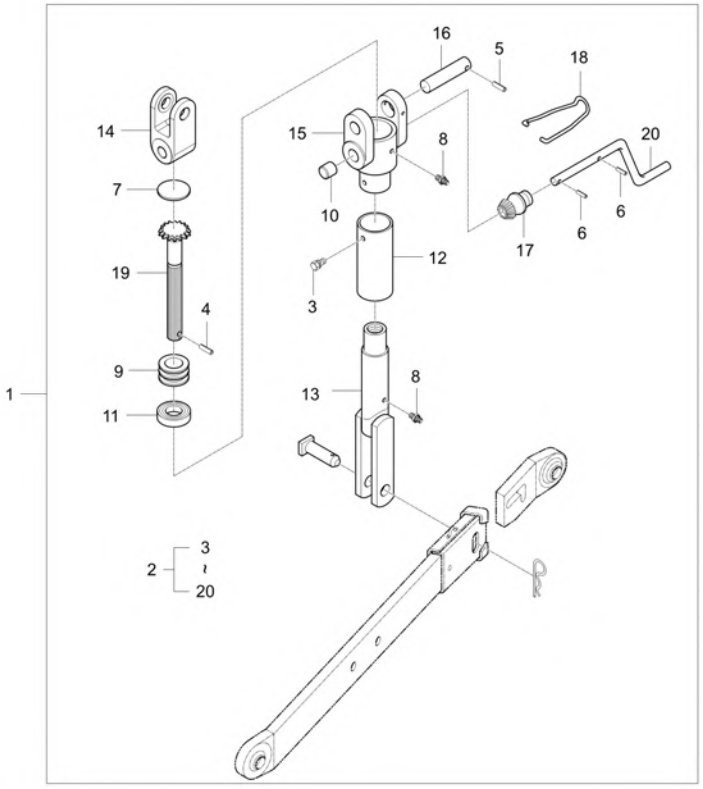

A : CK3510SEB

No.	Part Number	Description	Qty A	Qty B	Qty C	Qty D	Qty E	I.C	Remark
1	TC26-A0002A	LIFT ROD KIT	1						
2	T2185-71613	LIFT ROD ASSY RH v	1						
3	01202-50612	BOLT	1						
4	05411-00420	PIN, SPRING	1						
5	05411-00532	PIN,SPRING	1						
6	05411-00622	PIN,SPRING	2						
7	06311-75045	PLUG	1						T2*48*48
8	06613-10675	GREASE NIPPLE	2						M6XP0.75
9	31220-7172-1	SHIM (LIFT ROD CONTROL)	3						T0.2
10	32244-7167-1	SPACER	1						DIA21.7X17
11	32294-7177-1	THRUST BALL BEARING	1						
12	34265-7170-1	TUBE	1						DIA42.7*3.5
13	T2185-71621	ROD, LIFT (LOWER)	1						
14	T2185-71631	JOINT(LIFT ROD)	1						
15	T2185-71641	GEAR CASE, LIFT ROD	1						
16	T2185-71651	PIN, LIFT ROD	1						
17	T2185-71661	ADJUST GEAR 2, LIFT ROD	1						
18	T2185-71671	SUPPORT, HANDLE	1						

----> Old replace New <---- New replace Old <-X-> Not interchangeable
<---> Interchangeable <-O-> Interchangeable with another part(s)
* Please place an order assy(*)

https://tractormanualz.com/

TC2-G6G2501

LIFT ROD GROUP(OPTION)

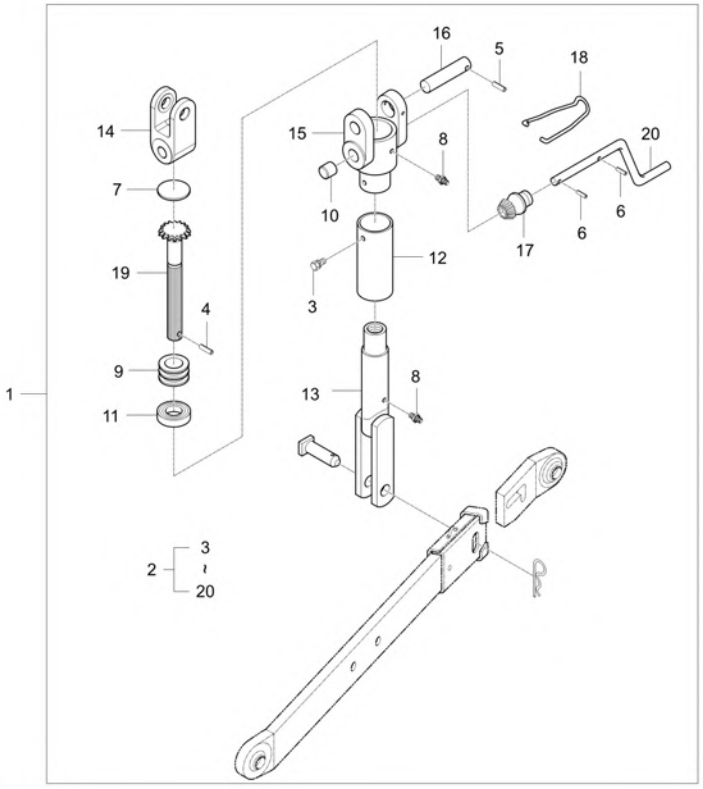

A : CK3510SEB

No.	Part Number	Description	Qty A	Qty B	Qty C	Qty D	Qty E	I.C	Remark
19	T2185-71691	GEAR, 1 LIFT ROD ADJUST	1						
20	T4340-71661	HANDLE	1						DIA12

----> Old replace New
<----> Interchangeable
* Please place an order assy(*)
<---- New replace Old
<-O-> Interchangeable with another part(s)
<-X-> Not interchangeable

https://tractormanualz.com/

TC2-G6G2601

FRONT GRILLE GUIDE GROUP

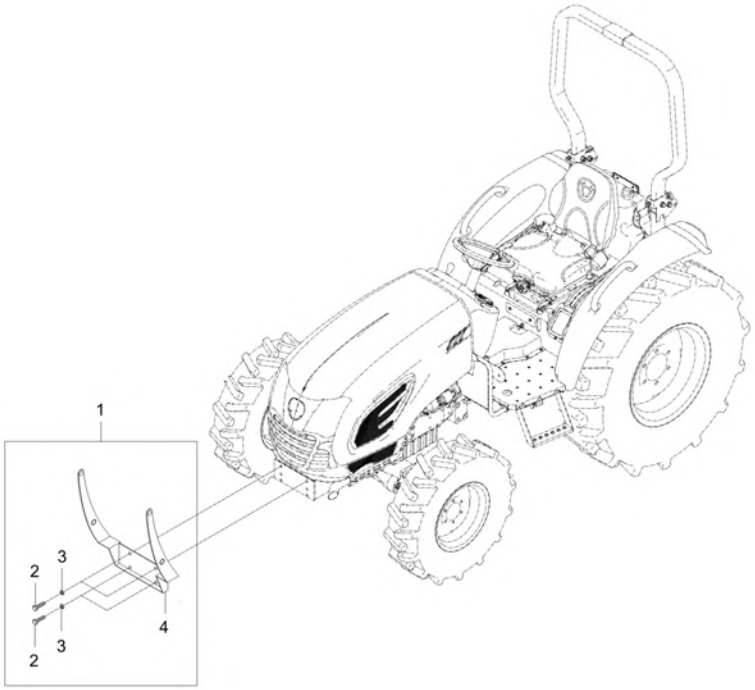

A : CK3510SEB

No.	Part Number	Description	Qty A	Qty B	Qty C	Qty D	Qty E	I.C	Remark
1	T5855-A5141	USE CKA159 or CKA136 for CK2610	1						
2	01173-51435	BOLT v	1						M14XP1.5
3	04512-50140	SPRING WASHER	4						
4	T5855-90611	GRILL, GUARD FR	4						

----> Old replace New
<---> Interchangeable
* Please place an order assy(*)
<---- New replace Old
<-O-> Interchangeable with another part(s)
<-X-> Not interchangeable

https://tractormanualz.com/

TC2-G6G2801

U TYPE DRAWBAR GROUP(OPTION)

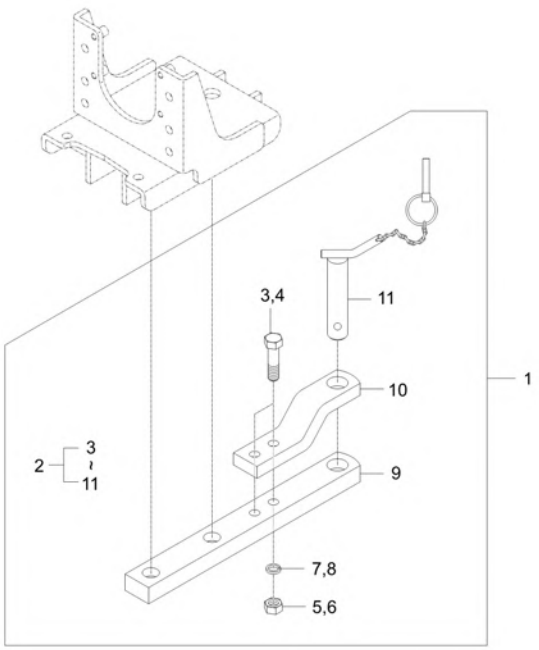

A : CK3510SEB

No.	Part Number	Description	Qty A	Qty B	Qty C	Qty D	Qty E	I.C	Remark
1	T5715-A5071	DRAW BAR KIT	1						
2	T2611-29723	ASSY,SWING DRAWBAR	1						
3	01176-51680	BOLT	1						M16*P1.25 (9T)
4	01176-51680	BOLT	1						M16*P1.25 (9T)
5	02076-50160	NUT	1						
6	02076-50160	NUT	1						
7	04512-50160	WASHER, SPRING	1						M16
8	04512-50160	WASHER, SPRING	1						M16
9	T2611-29731	DRAW BAR v	1						
10	T2611-29841	BRACKET	1						T22
11	T4186-29851	PIN, CONNECT	1						

----> Old replace New
<---> Interchangeable
* Please place an order assy(*)
<---- New replace Old
<-O-> Interchangeable with another part(s)
<-X-> Not interchangeable

https://tractormanualz.com/

TC2-G6A3001

REAR WEIGHT GROUP

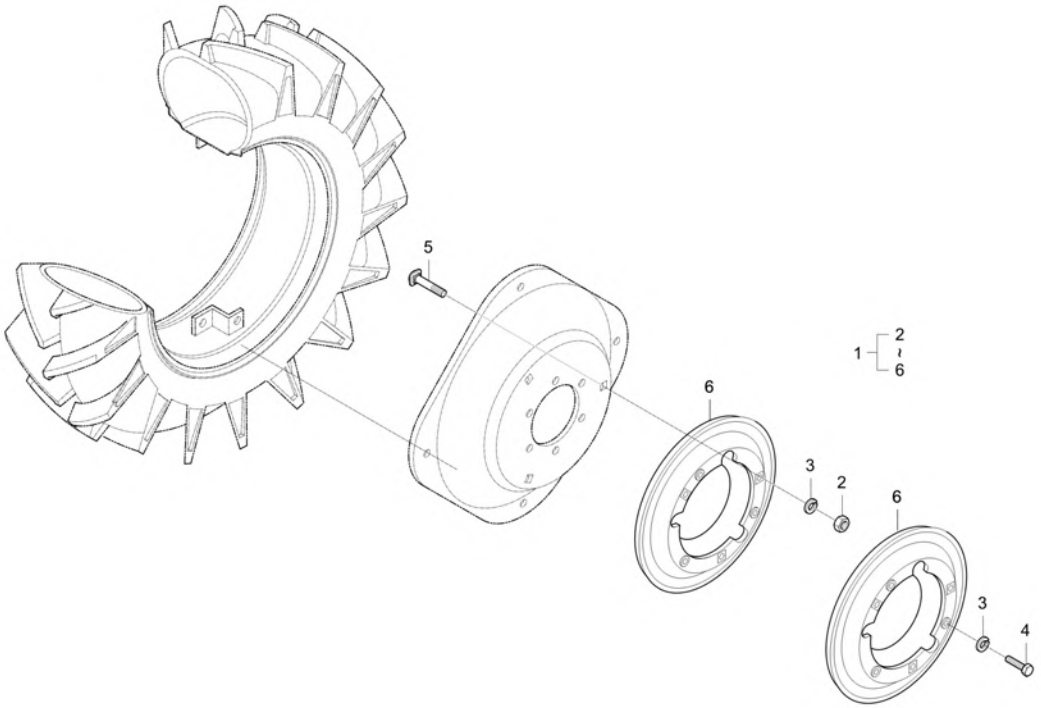

A : CK3510SEB

No.	Part Number	Description	Qty A	Qty B	Qty C	Qty D	Qty E	I.C	Remark
1	T5710-A03000601	WEIGHT ASSY dnr v	1						
1	T5710-A03000602	ASSY WEIGHT-RR	1					<------	
2	02076-50160	NUT	12						
3	04512-50160	WASHER, SPRING	12						M16
4	99415-1502-2	BOLT	6						
5	99415-1503-1	BOLT, WEIGHT	6						
6	T4240-27743	WEIGHT	4						
6	T4240-27744	WEIGHT, WHEEL	4					<------	

----> Old replace New
<----> Interchangeable
* Please place an order assy(*)
<---- New replace Old
<-O-> Interchangeable with another part(s)
<-X-> Not interchangeable

https://tractormanualz.com/

TC2-G6F9007 **ACCESSORIES_SERVICE PARTS GROUP**

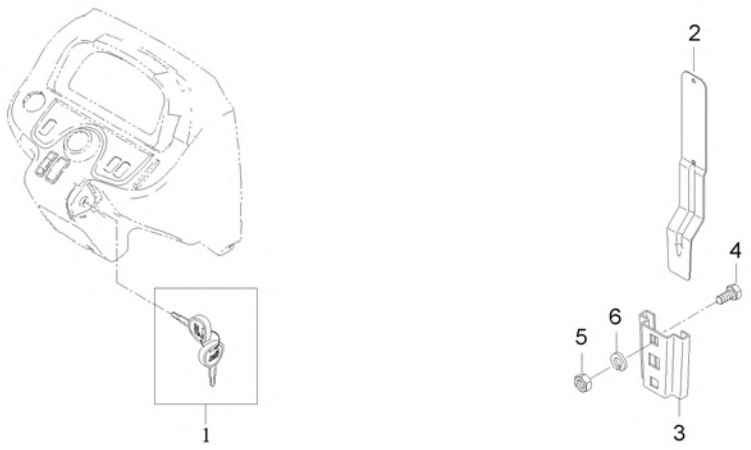

A : CK3510SEB

No.	Part Number	Description	Qty A	Qty B	Qty C	Qty D	Qty E	I.C	Remark
1	T5520-75191	DOUBLE SIDED KEY ASSY v	1						
1	TG35-0114A	ASSY KEY	1					<------	
2	T2555-98511	BRACKET, SMV	1						
3	T4125-70511	BRACKET	1						T1.6
4	T4125-70521	SCREW	2						
5	02114-50080	NUT v	2						M8*P1.25
6	04512-50080	SPRING WASHER	2						M08

----> Old replace New <---- New replace Old <-X-> Not interchangeable
<---> Interchangeable <-O-> Interchangeable with another part(s)
* Please place an order assy(*)

https://tractormanualz.com/

INDEX 1

https://tractormanualz.com/

PART NO.	PAGE	PART NO.	PAGE	PART NO.	PAGE	PART NO.	PAGE	PART NO.	PAGE
01023-50610	60	01123-50825	120	01133-51030	239	01177-51250	94	01754-50614	213
01023-50616	157	01123-50825	121	01133-51030	239	01202-50612	257	01754-50614	213
01023-50616	158	01123-50825	134	01133-51030	253	01202-50620	191	01754-50616	3
01023-50645	25	01123-50830	134	01133-51032	29	01202-50620	191	01754-50616	42
01023-50645	52	01123-50830	191	01133-51032	67	01205-50616	236	01754-50616	136
01023-50665	35	01123-50830	220	01133-51032	92	01205-50616	248	01754-50616	136
01023-50665	66	01123-50830	220	01133-51035	93	01513-50822	9	01754-50616	136
01023-50665	245	01123-50830	225	01133-51035	121	01513-50822	22	01754-50616	140
01023-50680	36	01123-50840	122	01133-51035	122	01513-50822	25	01754-50616	159
01025-50612	184	01123-50845	128	01133-51045	121	01513-50822	52	01754-50616	159
01025-50612	184	01123-50860	116	01133-51045	145	01513-50822	61	01754-50616	159
01027-50614	191	01123-50860	124	01133-51050	146	01513-50822	63	01754-50616	162
01027-50616	208	01123-50865	122	01133-51060	93	01513-50835	10	01754-50616	235
01027-50620	208	01123-50870	5	01133-51075	104	01513-50835	25	01754-50620	9
01053-50645	134	01123-50870	22	01133-51090	5	01513-50835	52	01754-50620	63
01073-51630	86	01123-50870	48	01133-51090	48	01513-50835	64	01754-50620	140
01123-50812	130	01123-50870	61	01133-51090	225	01517-51028	27	01754-50622	208
01123-50812	255	01123-50875	221	01133-51220	73	01517-51028	44	01754-50625	11
01123-50814	114	01123-50875	223	01133-51222	131	01517-51030	129	01754-50625	15
01123-50814	114	01123-51020	114	01133-51225	113	01517-51030	214	01754-50625	55
01123-50814	224	01123-51030	114	01133-51225	227	01517-51475	256	01754-50625	59
01123-50816	10	01123-51030	214	01133-51230	129	01517-51632	81	01754-50625	71
01123-50816	64	01125-50818	244	01133-51230	175	01574-51230	129	01754-50640	26
01123-50816	68	01125-50820	188	01133-51230	175	01574-51240	93	01754-50640	54
01123-50816	73	01125-50825	244	01133-51240	27	01574-51250	94	01754-50812	31
01123-50816	73	01125-50835	221	01133-51240	44	01654-50830	18	01754-50812	74
01123-50816	116	01125-50835	223	01135-51020	122	01654-50830	45	01754-50812	77
01123-50816	124	01125-50850	8	01135-51025	239	01654-50835	1	01754-50812	78
01123-50816	175	01125-50850	62	01135-51030	196	01654-50835	56	01754-50812	78
01123-50816	175	01125-50855	3	01135-51030	242	01754-50610	1	01754-50812	83
01123-50816	198	01125-50855	42	01173-51005	148	01754-50610	8	01754-50812	83
01123-50816	198	01125-50870	8	01173-51430	242	01754-50610	14	01754-50812	85
01123-50816	216	01125-50870	25	01173-51435	206	01754-50610	23	01754-50812	85
01123-50816	248	01125-50870	52	01173-51435	246	01754-50610	26	01754-50812	136
01123-50816	251	01125-50870	62	01173-51435	250	01754-50610	43	01754-50812	147
01123-50818	90	01127-50820	177	01173-51435	259	01754-50610	54	01754-50812	159
01123-50818	201	01133-51003	130	01173-51440	107	01754-50610	56	01754-50812	187
01123-50820	97	01133-51016	119	01173-51455	206	01754-50610	57	01754-50812	210
01123-50820	118	01133-51020	175	01173-51455	246	01754-50610	62	01754-50812	231
01123-50820	120	01133-51020	175	01173-51455	250	01754-50610	136	01754-50812	253
01123-50820	122	01133-51020	214	01173-51475	256	01754-50610	137	01754-50816	2
01123-50820	157	01133-51025	75	01173-51690	173	01754-50610	149	01754-50816	15
01123-50820	211	01133-51025	76	01173-51690	173	01754-50610	150	01754-50816	39
01123-50822	10	01133-51025	110	01173-51690	247	01754-50610	154	01754-50816	40
01123-50822	26	01133-51025	119	01173-51690	251	01754-50610	159	01754-50816	101
01123-50822	29	01133-51025	129	01175-51030	242	01754-50610	160	01754-50816	169
01123-50822	54	01133-51025	239	01175-51250	108	01754-50612	4	01754-50816	170
01123-50822	64	01133-51025	239	01176-51680	260	01754-50612	47	01754-50816	175
01123-50822	67	01133-51025	239	01176-51680	260	01754-50612	171	01754-50816	175
01123-50822	84	01133-51025	239	01177-51030	94	01754-50612	185	01754-50816	177
01123-50822	199	01133-51025	242	01177-51235	81	01754-50612	191	01754-50816	180
01123-50825	26	01133-51028	91	01177-51235	111	01754-50612	207	01754-50816	181
01123-50825	54	01133-51030	92	01177-51235	172	01754-50612	208	01754-50816	183
01123-50825	112	01133-51030	102	01177-51235	190	01754-50614	186	01754-50816	189
01123-50825	118	01133-51030	184	01177-51240	93	01754-50614	211	01754-50816	195

https://tractormanualz.com/

PART NO.	PAGE	PART NO.	PAGE	PART NO.	PAGE	PART NO.	PAGE	PART NO.	PAGE
01754-50816	211	02056-50060	132	02761-50040	65	04013-50060	244	04512-50140	173
01754-50816	211	02076-50120	108	02761-50050	153	04013-50060	245	04512-50140	173
01754-50816	211	02076-50120	217	02761-50060	150	04013-50100	148	04512-50140	206
01754-50816	214	02076-50160	86	02761-50060	152	04013-50100	191	04512-50140	206
01754-50816	221	02076-50160	260	02763-50080	9	04013-50100	195	04512-50140	242
01754-50816	223	02076-50160	260	02763-50080	22	04013-50100	201	04512-50140	246
01754-50816	224	02076-50160	261	02763-50080	25	04013-50100	218	04512-50140	246
01754-50816	225	02114-50080	262	02763-50080	52	04013-50100	244	04512-50140	247
01754-50816	228	02114-50120	173	02763-50080	61	04013-50100	245	04512-50140	250
01754-50816	237	02114-50120	247	02763-50080	63	04013-50100	248	04512-50140	250
01754-50816	242	02114-50120	250	02763-50080	145	04013-50140	206	04512-50140	251
01754-50816	255	02156-50080	128	02763-50080	146	04013-50160	179	04512-50140	256
01754-50820	22	02156-50080	147	02763-50080	175	04014-50080	255	04512-50140	259
01754-50820	61	02156-50080	148	02763-50080	177	04014-50100	226	04512-50160	86
01754-50820	181	02156-50080	221	02763-50080	177	04014-50180	256	04512-50160	173
01754-50820	181	02156-50080	221	02763-50080	177	04015-50050	245	04512-50160	173
01754-50820	187	02156-50080	221	02763-50080	186	04015-50060	205	04512-50160	206
01754-50820	188	02156-50080	223	02763-50080	221	04015-50060	245	04512-50160	247
01754-50820	210	02156-50080	223	02763-50080	223	04015-50080	234	04512-50160	251
01754-50825	9	02156-50080	229	02763-50080	239	04015-50080	234	04512-50160	254
01754-50825	22	02156-50080	230	02771-50100	175	04015-50100	122	04512-50160	260
01754-50825	61	02156-50080	234	02783-50100	29	04015-50100	214	04512-50160	260
01754-50825	63	02156-50080	234	02783-50100	67	04015-50100	239	04512-50160	261
01754-50830	3	02156-50080	254	03004-50614	244	04015-50100	239	04512-50180	256
01754-50830	4	02156-50080	254	03016-50616	18	04111-50060	101	04611-00120	78
01754-50830	17	02156-50080	255	03016-50616	45	04512-50040	156	04611-00120	83
01754-50830	21	02172-50160	111	03016-50616	191	04512-50080	147	04611-00120	85
01754-50830	25	02176-50100	121	03016-50616	220	04512-50080	148	04611-00350	234
01754-50830	42	02176-50100	145	03024-50510	23	04512-50080	221	04611-00470	253
01754-50830	47	02176-50100	146	03024-50510	43	04512-50080	221	04611-00520	78
01754-50830	52	02176-50100	148	03024-50512	191	04512-50080	221	04611-00520	84
01754-50830	58	02176-50100	179	03024-50514	179	04512-50080	223	04611-00520	87
01754-50830	59	02176-50100	191	03024-50514	221	04512-50080	223	04611-00520	97
01754-50830	136	02176-50100	194	03024-50514	223	04512-50080	254	04611-00520	253
01754-50830	159	02176-50100	195	03056-50408	195	04512-50080	254	04611-00550	88
01754-50830	239	02176-50100	214	03056-50510	224	04512-50080	255	04611-00720	105
01754-50830	239	02176-50100	218	04011-50120	198	04512-50080	262	04611-00720	107
01754-50830	239	02176-50100	226	04011-50120	217	04512-50100	121	04611-00720	108
01754-50835	15	02176-50100	227	04011-50120	217	04512-50100	145	04611-00800	108
01754-50835	21	02176-50100	229	04011-50140	191	04512-50100	146	04611-00850	81
01754-50835	25	02176-50100	242	04011-50140	256	04512-50100	148	04611-00920	88
01754-50835	40	02176-50120	81	04011-50160	173	04512-50100	191	04612-00150	191
01754-50835	52	02176-50120	93	04011-50160	173	04512-50100	214	04612-00150	232
01754-50835	59	02176-50120	94	04011-50160	193	04512-50100	244	04612-00160	134
01754-50840	216	02176-50120	129	04011-50160	247	04512-50100	245	04612-00160	179
01754-50840	216	02176-50120	129	04011-50160	251	04512-50120	81	04612-00160	193
01754-50840	216	02176-50120	217	04011-50160	254	04512-50120	93	04612-00170	234
01754-50850	68	02176-50120	233	04011-50180	17	04512-50120	94	04612-00180	254
01774-51003	148	02176-50140	111	04011-50180	58	04512-50120	129	04612-00190	7
01774-51030	201	02176-50140	256	04011-50180	255	04512-50120	129	04612-00190	49
01811-50615	171	02176-50180	256	04011-50200	194	04512-50120	217	04612-00200	194
01811-50615	185	02751-50050	247	04011-50200	198	04512-50120	217	04612-00250	73
02014-50100	245	02751-50060	211	04012-50060	191	04512-50120	233	04612-00250	87
02018-50100	244	02751-50060	245	04012-50080	91	04512-50140	107	04612-00250	230
02054-50040	156	02761-50040	31	04012-50080	194	04512-50140	111	04612-00300	72

https://tractormanualz.com/

PART NO.	PAGE	PART NO.	PAGE	PART NO.	PAGE	PART NO.	PAGE	PART NO.	PAGE
04612-00300	80	04811-00420	111	05012-01018	12	05511-50445	198	07715-01605	83
04612-00300	95	04811-00490	111	05012-01018	38	05515-50800	214	07715-01605	97
04612-00300	99	04811-06350	73	05012-01018	81	05515-50800	214	07715-01605	101
04612-00300	99	04811-06420	78	05012-01018	104	05515-50800	231	07715-01605	252
04612-00320	72	04811-06630	3	05012-01020	93	05515-51000	214	08101-06006	88
04612-00350	84	04811-06630	42	05012-01020	94	05515-51000	227	08101-06009	75
04612-00350	88	04811-10300	18	05012-01020	107	05515-51000	229	08101-06010	75
04612-00350	99	04811-10300	45	05112-50840	91	05515-51000	247	08101-06010	108
04612-00400	102	04811-10800	121	05122-50616	225	05515-51000	251	08101-06012	108
04612-00450	131	04811-50300	15	05122-50616	231	05515-51600	173	08101-06204	253
04612-00500	108	04811-50300	41	05122-50618	225	05515-51600	202	08101-06205	15
04613-50060	133	04811-50350	118	05122-50814	215	05515-51600	246	08101-06205	40
04613-50060	133	04811-50500	21	05122-50814	215	05515-51600	246	08101-06205	78
04613-50060	133	04811-50850	111	05122-50816	224	05515-51600	250	08101-06205	84
04613-50060	191	04811-51050	107	05122-50828	194	05515-51600	250	08101-06205	87
04717-01000	93	04814-00160	2	05122-51025	214	05525-50600	191	08101-06205	95
04717-01000	94	04814-00160	39	05122-51025	247	05525-50600	195	08101-06205	95
04717-01000	103	04816-00140	122	05122-51025	247	05525-50600	223	08101-06205	99
04717-01000	108	04816-00150	15	05122-51025	251	05525-50600	225	08101-06205	99
04717-01000	253	04816-00150	17	05122-51028	194	05525-50600	225	08101-06205	252
04717-02650	93	04816-00150	40	05122-51028	229	05525-50600	231	08101-06206	108
04717-02650	94	04816-00150	58	05122-51028	229	05525-50600	231	08101-06207	84
04724-00120	13	04816-00200	116	05122-51028	230	05525-50800	224	08101-06207	99
04724-00120	38	04816-00200	117	05122-51028	248	05525-50800	224	08101-06207	107
04724-00140	133	04816-00200	117	05122-51250	198	05525-50800	228	08101-06207	108
04810-00140	131	04816-00200	122	05122-51265	200	05525-50800	255	08101-06208	88
04810-00180	121	04816-00200	122	05411-00412	97	05525-51000	254	08101-06209	81
04810-00280	120	04816-00200	122	05411-00420	257	05525-51200	200	08101-06210	81
04810-00280	120	04816-00200	122	05411-00528	88	05525-51200	200	08101-06212	104
04811-00090	118	04816-00200	124	05411-00532	257	05624-20408	166	08101-06304	252
04811-00100	14	04816-00200	124	05411-00540	77	05712-00410	15	08101-06305	72
04811-00100	57	04816-00200	124	05411-00622	257	05712-00410	55	08101-06305	72
04811-00140	74	04816-00220	15	05411-00625	74	05712-00720	4	08101-06305	84
04811-00140	77	04816-00220	40	05411-00625	97	05712-00720	18	08101-06306	81
04811-00140	77	04817-00180	121	05411-00630	227	05712-00720	45	08101-06306	95
04811-00140	78	04817-00200	116	05411-00630	255	05712-00720	47	08101-06306	112
04811-00140	83	04817-00200	117	05411-00632	221	05712-00730	18	08101-06307	112
04811-00140	85	04817-00200	117	05411-00632	223	05712-00730	45	08101-06308	102
04811-00140	118	04817-00200	122	05411-00635	73	06311-75045	12	08101-06807	88
04811-00140	253	04817-00200	122	05411-00635	99	06311-75045	38	08111-06003	234
04811-00150	1	04817-00200	122	05411-00635	179	06311-75045	257	08121-06002	19
04811-00150	15	04817-00200	122	05411-00645	253	06331-35010	253	08121-06002	45
04811-00150	17	04817-00200	124	05411-00840	77	06331-45010	93	08511-02025	91
04811-00150	56	04817-00200	124	05411-00840	230	06331-45010	94	08511-04550	129
04811-00160	15	05012-00408	18	05411-00855	131	06331-45010	103	08511-05050	129
04811-00160	40	05012-00408	45	05511-50218	179	06331-45010	108	08711-30306	105
04811-00160	101	05012-00510	15	05511-50218	194	06350-00607	4	08822-53017	230
04811-00200	94	05012-00510	40	05511-50218	229	06613-10675	257	08822-53017	252
04811-00210	134	05012-00818	90	05511-50220	91	06613-20010	111	08823-03520	72
04811-00220	15	05012-00818	92	05511-50220	191	06613-20010	111	08823-54027	99
04811-00240	80	05012-00818	93	05511-50318	194	06613-30010	134	09318-88130	9
04811-00250	134	05012-00818	102	05511-50318	230	07715-00401	97	09318-88130	60
04811-00320	8	05012-00818	129	05511-50320	132	07715-00805	80	09318-88130	63
04811-00320	62	05012-00818	253	05511-50430	198	07715-01605	74	09318-88130	241
04811-00390	81	05012-01018	12	05511-50435	200	07715-01605	78	09318-88130	241

https://tractormanualz.com/

PART NO.	PAGE	PART NO.	PAGE	PART NO.	PAGE	PART NO.	PAGE	PART NO.	PAGE
09318-88140	68	32210-2758-1	176	38430-2554-1	252	E5500-73013	61	E6303-33661	56
09318-88180	17	32240-3446-1	114	38435-2178-1	95	E5500-73272	22	E6303-33751	1
09318-88180	22	32240-7121-4	201	38440-4467-3	111	E5500-73272	61	E6303-33751	56
09318-88180	23	32240-7122-4	201	38440-4475-1	111	E5500-73342	22	E6303-33752	1
09318-88180	43	32244-7118-2	201	38630-4476-1	111	E5500-73342	61	E6303-33752	56
09318-88180	58	32244-7118-2	201	38630-4484-3	93	E5500-73343	22	E6400-13241	7
09318-88180	61	32244-7167-1	257	41011-5151-4	242	E5500-73343	61	E6400-13241	49
09318-88250	10	32294-7177-1	257	41182-5151-1	201	E5608-99522	30	E6403-13361	7
09318-88250	64	32350-2898-4	194	44366-4723-1	218	E5608-99522	33	E6403-13361	49
09318-88260	10	32353-7189-3TP	200	46001-0430	123	E5616-74252ED	35	E6510-05552	23
09318-88260	64	34150-2939-1	3	52300-3412-1	179	E5616-74252ED	36	E6510-05552	25
09500-35558	99	34150-2939-1	42	52300-3412-1	179	E5616-74252ED	66	E6510-05552	43
09500-45609	131	34150-2939-1	42	52300-3412-1	195	E5629-74111	36	E6510-05552	52
09502-55210	78	34150-2939-1	140	53415-4128-1	224	E5800-14261	7	E6510-14532	23
09502-55210	253	34150-3764-4	206	54821-3818-2	186	E5800-14261	49	E6510-14532	43
09661-80150	60	34150-3764-4TP	201	55311-3155-1	179	E5800-25161	28	E6510-14671	23
09661-80260	60	34150-3764-4TP	202	55311-3156-1	179	E5800-25161	50	E6510-14671	43
09661-80300	24	34265-7170-1	257	55611-5711-1	114	E5800-25182	28	E6510-33661	23
09661-80450	24	36001-0098	123	57781-5121-1	193	E5800-25182	50	E6510-33661	43
14911-4275-1	24	37150-1232-1	174	62331-1853-2	74	E5800-64102	148	E6510-91502	7
14911-4275-1	60	37150-3447-1	31	62331-1853-2	78	E5800-96032	16	E6510-91502	49
14911-4275-1	186	37150-3447-1	130	62331-1853-2	83	E5800-96032	40	E6700-13111	7
15021-1424-1	7	37150-3447-1	136	62331-1853-2	97	E5850-32617	17	E6700-13111	49
15021-1424-1	49	37150-3447-1	136	62331-1853-2	101	E5850-32617	58	E6700-13121	7
15221-0175-1	2	37150-3447-1	141	62411-3313-1	114	E5850-74151	36	E6700-13121	49
15221-0175-1	39	37150-3447-1	159	66204-3623-1	208	E5900-96022	2	E6850-73342	22
15221-0337-3	2	37150-3447-1	159	70515-1633-4	242	E5900-96022	12	E6850-73342	61
15221-0337-3	39	37150-3447-1	163	76802-5691-0	112	E5900-96022	38	E6850-74151	35
15221-0338-3	12	37150-3447-1	186	76KB-0512	214	E5900-96022	39	E6850-74151	66
15221-0338-3	38	37150-3447-1	208	82KC-0641	211	E5900-96032	13	E6857-72531	35
15221-0339-2	12	37155-3447-1	31	82KC-0807	132	E5900-96032	38	E6857-72531	36
15221-0339-2	38	37155-3447-1	148	84612-1445-0	230	E6200-04623	145	E6857-72531	66
15221-0349-3	2	37220-2125-1	78	99415-1502-2	261	E6200-04623	146	E6864-63011	146
15221-0349-3	39	37220-2125-1	83	99415-1503-1	261	E6201-32443	17	E7103-63821	28
15301-7247-0	187	37220-2125-1	85	C7130-65721	143	E6201-32443	58	E7103-63821	50
15301-7247-0	187	37300-2643-2	75	C7140-68811	255	E6300-35681	15	E7230-11081	183
15301-7247-0	187	37300-2644-2	75	E1500-18411	208	E6300-35681	55	E7240-32731	144
15301-7247-0	210	37300-2648-1	75	E1500-18411	208	E6301-13151	7	E7251-64011	148
15301-7247-0	210	37300-2649-1	75	E5205-24321	4	E6301-13151	49	E7251-64012	148
15301-7247-0	210	37300-2661-4	75	E5205-24321	47	E6301-14111	7	E7300-11781	97
15471-9536-1	6	37300-2817-2	75	E5500-04464	18	E6301-14111	49	EF11-0001A	27
15471-9536-1	48	37650-4368-0	112	E5500-04464	45	E6301-14311	7	EF11-0001A	44
15521-3229-1	17	37800-4387-1	76	E5500-11302	3	E6301-14311	49	EF15-0004A	20
15521-3229-1	58	38240-1883-1	142	E5500-11302	42	E6301-14331	7	EF15-0004A	46
15521-9602-2	129	38240-1883-1	164	E5500-13333	7	E6301-14331	49	EF15-0005A	30
15521-9603-3	129	38240-1883-1	236	E5500-13333	49	E6301-14431	7	EF15-0005B	32
15532-7243-2	186	38240-1883-1	245	E5500-14232	7	E6301-14431	49	EF15-0029A	5
19202-2325-1	18	38240-1883-1	255	E5500-14232	49	E6301-21202	20	EF15-0029A	48
19202-2325-2	18	38240-2647-2	75	E5500-15553	4	E6301-33812	12	EF15-0030A	5
19202-2325-2	45	38325-1398-1	170	E5500-15553	47	E6301-33812	38	EF15-0030A	48
31220-2628-1	75	38325-1398-1	183	E5500-33142	15	E6302-21051	20	EF15-0038A	6
31220-2639-2	75	38360-2178-1	95	E5500-33142	40	E6302-21051	46	EF15-0038A	48
31220-7172-1	257	38430-1827-1	211	E5500-39013	144	E6302-21151	20	EF15-0039A	6
31355-2949-1	132	38430-2155-1	88	E5500-63016	145	E6302-21161	20	EF15-0039A	48
31365-2278-1	252	38430-2554-1	95	E5500-73013	22	E6303-33661	1	EF17-0007A	137

https://tractormanualz.com/

PART NO.	PAGE	PART NO.	PAGE	PART NO.	PAGE	PART NO.	PAGE	PART NO.	PAGE
EF17-0007A	138	EH35-0002A	59	F5800-13773	26	F5830-17562	63	F6800-04251	3
EF36-0001C	37	EH35-0005A	59	F5800-13773	54	F5830-17801	9	F6800-04251	42
EF36-0001D	37	EH35-0006A	68	F5800-14001	7	F5830-17801	63	F6800-04302	16
EF36-0001E	37	EH35-0007A	68	F5800-14001	49	F5830-25423	29	F6800-04302	55
EF36-0002C	37	EH35-0008A	68	F5800-14521	23	F5830-25423	67	F6800-04401	16
EF36-0002D	37	EH35-0009A	68	F5800-14521	43	F5830-72914	22	F6800-04401	55
EF36-0002E	37	EH35-0010A	68	F5800-14561	23	F5830-72914	61	F6800-04501	16
EF36-0005A	216	EH35-0011A	68	F5800-14561	43	F5850-01007	12	F6800-04501	40
EF36-0011A	21	EH35-0012A	69	F5800-16012	4	F5850-01008	12	F6800-04811	18
EF36-0011A	59	EH35-0013A	69	F5800-16012	47	F5850-01107	12	F6800-04811	45
EF36-0012A	25	EH35-0015A	59	F5800-16152	4	F5850-01108	12	F6800-09051	4
EF36-0012A	52	EH35-0015B	59	F5800-17502	9	F5850-01115	12	F6800-09051	47
EF36-0013A	34	EH35-0016A	68	F5800-17503	9	F5850-01116	12	F6800-10121	5
EF36-0013A	53	EH35-0016B	68	F5800-17503	63	F5850-04103	15	F6800-10155	5
EF36-0018A	167	EH35-0018A	60	F5800-17512	9	F5850-04104	15	F6800-10155	48
EF36-0019A	35	EH38-0002A	70	F5800-17512	63	F5850-04105	15	F6800-10163	5
EF36-0019A	36	EH38-0002B	70	F5800-17521	9	F5850-04105	40	F6800-10163	48
EF36-0019A	51	EH38-0002C	70	F5800-17522	9	F5850-04106	15	F6800-10261	5
EF36-0020A	28	EH38-0005A	33	F5800-17522	63	F5850-04106	40	F6800-10261	6
EF36-0020B	28	EH38-0005B	33	F5800-17531	9	F5850-04612	27	F6800-10261	48
EF36-0020B	50	EH39-0001A	11	F5800-17531	63	F5850-04612	44	F6800-10301	5
EF36-0020C	28	EH39-0001A	71	F5800-20101	10	F5850-05511	23	F6800-10301	48
EF36-0020C	50	EH39-0002A	138	F5800-20101	64	F5850-05511	43	F6800-10311	5
EF36-0021A	28	EH39-0002B	138	F5800-21311	20	F5850-10102	5	F6800-10321	5
EF36-0021B	28	F5800-01124	12	F5800-21311	46	F5850-10102	48	F6800-10353	5
EF36-0021B	50	F5800-01601	1	F5800-21331	20	F5850-10112	5	F6800-10353	48
EF36-0021C	28	F5800-01601	56	F5800-21331	46	F5850-11953	26	F6800-10401	5
EF36-0021C	50	F5800-01602	1	F5800-23111	18	F5850-11953	54	F6800-10401	48
EF36-0024A	35	F5800-01602	56	F5800-23111	45	F5850-14501	23	F6800-10411	5
EF36-0024A	66	F5800-01611	1	F5800-26501	136	F5850-14501	43	F6800-10421	5
EH13-0002A	25	F5800-03044	2	F5800-26501	137	F5850-14511	23	F6800-10455	5
EH13-0002A	52	F5800-03044	39	F5800-26501	138	F5850-21112	20	F6800-10455	48
EH15-0001A	59	F5800-03054	2	F5800-26501	159	F5850-21112	46	F6800-10502	6
EH15-0001B	59	F5800-03311	2	F5800-26501	160	F5850-24401	13	F6800-10612	6
EH15-0016A	60	F5800-03311	39	F5800-26502	136	F5850-24401	38	F6800-10612	48
EH16-0008A	35	F5800-04113	16	F5800-26502	137	F5850-25101	29	F6800-12103001	21
EH16-0008A	36	F5800-04114	16	F5800-26502	138	F5850-25101	67	F6800-12103002	21
EH16-0008A	66	F5800-04115	16	F5800-26502	159	F5850-73262	22	F6800-12103002	60
EH19-0003A	136	F5800-04115	40	F5800-26801	137	F5850-73262	61	F6800-12104	21
EH19-0004A	138	F5800-04116	16	F5800-26801	160	F5850-73341	2	F6800-12371	29
EH23-0002B	52	F5800-04116	40	F5800-32111	1	F5850-73341	39	F6800-12371	67
EH25-0001A	59	F5800-06201	18	F5800-32111	56	F6720-04711	16	F6800-13311	22
EH25-0006A	60	F5800-06201	45	F5800-36412	14	F6720-04711	40	F6800-13311	61
EH25-0006A	68	F5800-11762	25	F5800-36413	14	F6720-04712	16	F6800-14351	7
EH25-0006A	68	F5800-11763	25	F5800-36413	57	F6720-04712	40	F6800-14351	49
EH25-0007A	68	F5800-11821	25	F5800-36414	14	F6720-04721	16	F6800-15111	4
EH25-0009A	68	F5800-11821	52	F5800-36414	57	F6720-04721	40	F6800-15111	47
EH25-0010A	68	F5800-12203	21	F5800-36422	14	F6720-04731	16	F6800-15122	23
EH29-0001A	65	F5800-12252	21	F5800-36422	57	F6720-04731	40	F6800-15122	43
EH29-0002A	136	F5800-12313	26	F5800-42501	21	F6800-03451	2	F6800-16121	68
EH29-0002A	159	F5800-12313	54	F5800-65561	31	F6800-03451	39	F6800-16121	216
EH31-0001A	38	F5800-12351	26	F5805-16402	216	F6800-03501	2	F6800-16131	24
EH31-0001B	38	F5800-12351	54	F5820-16161	17	F6800-03501	39	F6800-16181	210
EH32-0001A	48	F5800-13764	26	F5820-16161	58	F6800-04215	3	F6800-16271	4
EH35-0001A	59	F5800-13764	54	F5830-17562	9	F6800-04215	42	F6800-16271	47

https://tractormanualz.com/

PART NO.	PAGE	PART NO.	PAGE	PART NO.	PAGE	PART NO.	PAGE	PART NO.	PAGE
F6800-16411	216	F6800-26671	29	F6800-92411	67	T2185-26511	75	T2185-85101005	245
F6800-16511	4	F6800-26671	67	F6800-92421	26	T2185-26521	76	T2185-97153	173
F6800-16511	47	F6800-26701	159	F6800-92421	54	T2185-27202	81	T2185-97171	122
F6800-17101	26	F6800-26751	159	F6800-92441	26	T2185-41602	111	T2195-25241	88
F6800-17101	54	F6800-33651	12	F6800-92441	29	T2185-41611	111	T2195-26102	75
F6800-17211	25	F6800-33651	38	F6800-92441	54	T2185-41691	111	T2195-26103	75
F6800-17211	52	F6800-35631	18	F6800-92441	67	T2185-42291	105	T2195-26511	75
F6800-17551	9	F6800-35631	45	F6800-92451	26	T2185-42361	108	T2195-26521	75
F6800-17551	63	F6800-35661	16	F6800-92451	54	T2185-42371	108	T2198-11012	183
F6800-17701	25	F6800-35661	55	F6800-92452	26	T2185-42451	105	T2198-31052	154
F6800-17701	52	F6800-42511	21	F6800-92452	54	T2185-42461	105	T2198-68811	142
F6800-20301	9	F6800-42511	59	F6800-92771	6	T2185-42471	105	T2198-69471	149
F6800-20301	10	F6800-53471	21	F6800-92771	48	T2185-42481	105	T2198-82571	60
F6800-20301	63	F6800-53471	59	F6800-94111	26	T2185-42491	105	T2198-82571	68
F6800-20301	64	F6800-53722	21	F6800-94111	54	T2185-42751	105	T2198-82571	140
F6800-20401	10	F6800-53722	59	F6805-53001	21	T2185-42761	105	T2230-85242	173
F6800-20401	64	F6800-53732	21	F6805-53452	21	T2185-42771	105	T2230-85242	173
F6800-20501	10	F6800-53732	59	F6805-53453	21	T2185-42781	105	T2230-85242	247
F6800-20501	64	F6800-53742	21	F6805-53453	59	T2185-42791	105	T2230-85242	251
F6800-20703	13	F6800-53742	59	F6805-99521	30	T2185-42801	105	T2240-26355	76
F6800-20703	38	F6800-60011	158	F6805-99521	33	T2185-43541	108	T2241-50311	167
F6800-21351	20	F6800-64421	22	F6860-96042	22	T2185-43871	107	T2305-21762	84
F6800-21351	46	F6800-64421	61	F6860-96042	61	T2185-43881	107	T2305-26061	76
F6800-22011	20	F6800-65511	31	K5400-14572	84	T2185-43891	107	T2305-26071	76
F6800-22011	46	F6800-65511	65	K5400-14572	102	T2185-43901	108	T2305-26081	76
F6800-22111	20	F6800-72921	22	K5400-14581	102	T2185-44764	227	T2305-26641	133
F6800-22111	46	F6800-72921	61	K5400-14582	84	T2185-50441	207	T2305-43883	93
F6800-22141	20	F6800-73031	8	K5400-14582	102	T2185-51462	211	T2350-13602006	186
F6800-22141	46	F6800-73031	62	K5400-14591	102	T2185-66151	116	T2350-13612	186
F6800-23481	18	F6800-73051	8	K5400-14592	84	T2185-66151	124	T2350-23132	78
F6800-23481	45	F6800-73051	62	K5400-14592	102	T2185-66531	221	T2350-23132	83
F6800-23491	18	F6800-73341	13	K9100-50241	242	T2185-66531	223	T2350-23132	85
F6800-23491	45	F6800-73341	38	KX97382-S51	170	T2185-69771	187	T2350-25421	84
F6800-23501	35	F6800-90111	12	KX97382-S51	183	T2185-69771	210	T2350-25871	253
F6800-23501	36	F6800-90121	12	M301260	118	T2185-70491	188	T2350-50021	208
F6800-23501	51	F6800-90121	12	P5370-82551	187	T2185-70491	207	T2350-55881	229
F6800-23531	18	F6800-90121	38	P5370-82551	210	T2185-71221	225	T2350-55881	230
F6800-23531	45	F6800-91822	34	P5370-82551	241	T2185-71241	225	T2350-55922	193
F6800-23541	18	F6800-91822	53	T2165-39281	134	T2185-71241	234	T2350-55961	229
F6800-23541	45	F6800-91841	120	T2181-25442	203	T2185-71613	257	T2350-55961	230
F6800-24111	18	F6800-91851	116	T2181-97191	173	T2185-71621	257	T2350-66101	234
F6800-24111	45	F6800-91851	124	T2181-97191	173	T2185-71631	257	T2350-95472	224
F6800-25501	26	F6800-91851	216	T2181-97191	247	T2185-71641	257	T2360-34142	231
F6800-25501	54	F6800-91911	10	T2181-97191	251	T2185-71651	257	T2360-37081	117
F6800-26102	11	F6800-91911	26	T2185-14723	91	T2185-71661	257	T2360-37081	122
F6800-26102	71	F6800-91911	29	T2185-21651	95	T2185-71671	257	T2360-37081	124
F6800-26201	136	F6800-91911	54	T2185-22151	101	T2185-71691	258	T2440-16351	234
F6800-26201	159	F6800-91911	64	T2185-22171	101	T2185-79061	152	T2440-21361	99
F6800-26303	136	F6800-91911	67	T2185-22812	99	T2185-79061	152	T2440-44251	252
F6800-26303	159	F6800-92311	35	T2185-22824	99	T2185-82551	114	T2445-29781	242
F6800-26401	136	F6800-92311	36	T2185-22846	99	T2185-82551	243	T2445-29822TP	198
F6800-26401	159	F6800-92311	51	T2185-22852	99	T2185-82551	248	T2445-29822TP	198
F6800-26651	160	F6800-92411	26	T2185-24283	254	T2185-82561	187	T2555-23331	74
F6800-26661	29	F6800-92411	29	T2185-26121	102	T2185-82561	210	T2555-23331	77
F6800-26661	67	F6800-92411	54	T2185-26342	75	T2185-85101004	245	T2555-23331	78

https://tractormanualz.com/

PART NO.	PAGE	PART NO.	PAGE	PART NO.	PAGE	PART NO.	PAGE	PART NO.	PAGE
T2555-23331	83	T2630-43011	104	T4520-43091	104	T4810-22852	99	T5315-81251	187
T2555-23331	253	T2630-43021	104	T4520-43131	104	T4810-24541	99	T5315-81251	210
T2555-26641	77	T2630-43031	104	T4520-43141	104	T4810-45713	118	T5410-48081	201
T2555-28461	80	T2630-43102	104	T4520-43151	104	T4810-45761	116	T5410-70211	217
T2555-29111	84	T2630-43111	104	T4520-43171	104	T4810-45761	118	T5410-85121	244
T2555-52141	167	T2630-43121	104	T4520-43601	111	T4810-45761	124	T5520-23651	89
T2555-52262	167	T2630-95052	177	T4520-44081	102	T4810-55312	239	T5520-69182	150
T2555-52282	167	T2660-71242	191	T4520-44091	102	T4810-66721	255	T5520-75171	139
T2555-52353	167	T4025-68301	142	T4520-44101	102	T4835-66532	255	T5520-75171	161
T2555-55462	233	T4025-68301	154	T4520-75481	139	T4837-77774	139	T5520-75191	262
T2555-60741	191	T4025-68301	164	T4520-75481	161	T4850-45161	118	T5520-80391	217
T2555-69023	154	T4025-68351	154	T4520-83301	224	T4850-45771	114	T5520-80531	114
T2555-69571	162	T4115-43871	76	T4620-21591	105	T4850-93051	198	T5520-80531	214
T2555-98511	262	T4115-65681	254	T4620-37092	116	T4875-85501	256	T5520-80531	214
T2610-14831	91	T4125-13561	208	T4620-37092	117	T4876-50251	207	T5520-80531	239
T2610-21754	95	T4125-14261	93	T4620-37092	123	T4880-64672	224	T5520-90071	125
T2610-21812	95	T4125-14261	94	T4620-37092	123	T4930-45671	114	T5525-50441	211
T2610-21812	99	T4125-38151	120	T4620-37092	124	T4930-45681	114	T5525-50721	186
T2610-22171	101	T4125-50591	207	T4620-37092	124	T4930-47071	117	T5525-51022	241
T2610-37453	131	T4125-53121	167	T4620-44331	101	T4930-47071	125	T5525-56631	196
T2610-39202	134	T4125-70261	238	T4620-44592	73	T4930-47091	114	T5525-69313	140
T2610-39212	134	T4125-70511	262	T4620-44592	99	T4930-64301	235	T5525-69313	159
T2610-39233	134	T4125-70521	262	T4620-50701	211	T4930-66731	192	T5525-89411	206
T2610-39252	134	T4125-91162	200	T4620-50701	213	T4930-66731	194	T5525-89421	206
T2610-39572	134	T4135-55531	229	T4620-50701	213	T4930-66731	229	T5525-89451	206
T2610-50271	188	T4144-75952	157	T4620-55762	230	T4930-66731	229	T5525-89452	206
T2610-52461	167	T4145-55791	194	T4620-55821	180	T4930-66731	230	T5525-89461	206
T2610-55731	230	T4145-60582	188	T4620-55912	193	T4930-66741	195	T5525-89471	206
T2610-55751	194	T4153-27831	220	T4620-60151	123	T4930-66751	192	T5525-89481	206
T2610-95081	177	T4153-27831	228	T4620-69331	163	T4930-66751	225	T5535-50451	208
T2611-26693	167	T4157-50271	188	T4620-69362	140	T4930-66751	231	T5535-69951	149
T2611-29723	260	T4157-51211	193	T4620-70272	232	T4931-67721	243	T5535-69961	150
T2611-29731	242	T4157-51211	254	T4620-85471TP	202	T4931-72091	208	T5565-88201	218
T2611-29731	260	T4157-56111	192	T4625-52351	167	T4935-52011	166	T5620-50291	180
T2611-29841	260	T4157-56111	194	T4625-55431	219	T4935-92502	155	T5638-85721	153
T2611-54825	197	T4157-56111	194	T4625-55431	219	T4938-52351	167	T5710-30091	125
T2615-25661	88	T4157-56111	229	T4625-55441	236	T4938-53551	167	T5710-32101	133
T2615-25671	88	T4157-56111	230	T4628-66211	132	T5210-37311	129	T5710-32511	133
T2615-25681	88	T4180-34041	118	T4665-50382	211	T5210-42101	103	T5710-32601	133
T2615-25711	88	T4182-60082	254	T4665-63622	110	T5210-42102	103	T5710-37231	131
T2615-25721	88	T4186-29851	260	T4668-83301	195	T5210-68682	243	T5710-37241	131
T2615-25742	88	T4240-21792	95	T4668-83301	218	T5210-69401	143	T5710-37302	128
T2615-25771	88	T4240-27743	261	T4670-63601	110	T5210-69741	152	T5710-37441	129
T2615-25782	88	T4240-27744	261	T4670-63602	110	T5210-69741	152	T5710-37571	128
T2615-25791	89	T4260-38125	120	T4680-93041	198	T5225-26111	89	T5710-37631	201
T2615-55112	167	T4260-50100	234	T4680-93061	198	T5245-55461	233	T5710-37961	133
T2615-91118	200	T4260-62552	2	T4682-43132	104	T5245-55462	233	T5710-39701	134
T2615-91119	200	T4260-62552	39	T4682-43571	143	T5248-52102	204	T5710-50263	184
T2615-91122	200	T4260-87511	177	T4682-65301	245	T5250-68771	140	T5710-50264	184
T2615-91123	200	T4340-71661	258	T4682-65311	230	T5250-68771	220	T5710-51092	211
T2615-91133	200	T4363-71581TP	202	T4682-65311	248	T5268-69321	243	T5710-51181	211
T2615-91143	200	T4520-26931	230	T4686-41351	239	T5270-52011	165	T5710-51181	213
T2615-93031	198	T4520-41821	154	T4720-90081	124	T5270-52011	165	T5710-51181	213
T2615-93131	198	T4520-43071	104	T4810-22581	72	T5270-55252	187	T5710-51181	213
T2630-42321	104	T4520-43081	104	T4810-22581	95	T5275-69251	158	T5710-51181	213

https://tractormanualz.com/

PART NO.	PAGE	PART NO.	PAGE	PART NO.	PAGE	PART NO.	PAGE	PART NO.	PAGE
T5710-51191	214	T5715-28222	80	T5815-26112	102	T5815-44592	73	T5855-57411	228
T5710-51951	176	T5715-28243	80	T5815-26551	76	T5815-44611	79	T5855-57612	227
T5710-52051	217	T5715-28253	80	T5815-26561	76	T5815-44691	79	T5855-57613	227
T5710-53471	224	T5715-37562	128	T5815-26682	77	T5815-45201	110	T5855-57632	227
T5710-55311	246	T5715-52411001	237	T5815-26711	81	T5815-55841	231	T5855-57805	192
T5710-55311TP	250	T5715-52411002	237	T5815-26721	81	T5815-55842	231	T5855-57813	192
T5710-59603	245	T5715-53471	224	T5815-26831	81	T5815-56413	220	T5855-57822	192
T5710-59612	245	T5715-53471	255	T5815-26832	81	T5818-51051	213	T5855-57832	192
T5710-59622	245	T5715-53611	227	T5815-27112	81	T5818-51061	213	T5855-57842	192
T5710-59633	245	T5715-55011	242	T5815-27113	81	T5818-51851	211	T5855-57853	192
T5710-69391	163	T5715-55021	242	T5815-27131	81	T5850-51851	211	T5855-57866	192
T5710-69513	162	T5715-55411	165	T5815-27361	82	T5855-41501	114	T5855-57882	192
T5710-69523	162	T5715-55431	165	T5815-28132	82	T5855-41512	114	T5855-57901	192
T5710-69711003	152	T5715-80681	180	T5815-28133	82	T5855-42031	114	T5855-57912	192
T5710-69711003	152	T5715-A5071	260	T5815-28134	82	T5855-43031	131	T5855-58451	255
T5710-69971	243	T5738-55291	246	T5815-28142	82	T5855-43042	131	T5855-65014	119
T5710-80013	229	T5738-55291	246	T5815-28143	82	T5855-43051	131	T5855-65032	202
T5710-80041	229	T5738-55291	250	T5815-28144	82	T5855-43061	131	T5855-65042	202
T5710-80651	180	T5738-55291	250	T5815-41621	111	T5855-43072	131	T5855-65913	242
T5710-80782	180	T5750-80251	179	T5815-41632	111	T5855-43082	131	T5855-69162	147
T5710-80841	234	T5750-81091	195	T5815-42144	103	T5855-43502	133	T5855-69212	156
T5710-80852	234	T5755-28211	80	T5815-42145	103	T5855-44012	134	T5855-69612	147
T5710-80861	234	T5758-68361	143	T5815-42211	105	T5855-46003	120	T5855-90611	259
T5710-80871	234	T5810-48022	117	T5815-42212	106	T5855-46502	120	T5855-A5141	259
T5710-81012	195	T5810-48022	125	T5815-43201	105	T5855-47042	123	T5858-51852	211
T5710-81031	195	T5810-48121	117	T5815-43202	105	T5855-47091	117	T5858-51862	213
T5710-81041	232	T5810-48121	125	T5815-43211	106	T5855-47091	123	T5858-51872	213
T5710-81051	195	T5810-66834	247	T5815-43212	106	T5855-47091	125	T5858-52211	240
T5710-81071	231	T5810-66834	251	T5815-43442	107	T5855-50222	184	TB13-0004A	110
T5710-81213	236	T5815-21116	94	T5815-43443	107	T5855-50251	184	TB16-0127B	248
T5710-81214	236	T5815-21122	102	T5815-43461	108	T5855-50252	184	TB16-0127B	251
T5710-81222	235	T5815-21242	97	T5815-43611	112	T5855-50411	208	TB25-0009A	151
T5710-81223	235	T5815-21571	95	T5815-43612	112	T5855-50431	208	TB25-0010A	151
T5710-81232	235	T5815-22112	102	T5815-43621	112	T5855-50483	208	TC22-0026A	80
T5710-90021	256	T5815-23114	74	T5815-43631	108	T5855-50521002	186	TC22-0027A	80
T5710-90031	256	T5815-23115	74	T5815-43632	109	T5855-50532	186	TC22-0041C	93
T5710-90032	256	T5815-23123	74	T5815-43641	109	T5855-50542	212	TC22-0041D	93
T5710-A03000601	261	T5815-23162	97	T5815-43642	109	T5855-50552	208	TC22-0043C	92
T5710-A03000602	261	T5815-23262	74	T5815-43651	109	T5855-50571	208	TC22-0044B	90
T5710-A5022	256	T5815-23531	72	T5815-43661	112	T5855-51861	212	TC22-0045A	90
T5710-A5023	256	T5815-23712	72	T5815-43811	107	T5855-51881	247	TC22-0047C	91
T5710-A5031	206	T5815-23973	94	T5815-43821	107	T5855-51881	251	TC22-0048B	91
T5710-A5032	206	T5815-23974	94	T5815-43831	109	T5855-52014	188	TC22-0049B	93
T5710-A5083	245	T5815-24102	252	T5815-43841	107	T5855-52021	188	TC22-0051B	88
T5715-21331	97	T5815-24103	252	T5815-44112	78	T5855-52032	188	TC22-0053B	89
T5715-21342	97	T5815-24114	253	T5815-44112	83	T5855-52033	188	TC22-0054B	89
T5715-21361	97	T5815-24121	252	T5815-44211	78	T5855-52213	239	TC22-0055B	89
T5715-21371	97	T5815-24131	253	T5815-44211	83	T5855-52223	239	TC22-0057B	84
T5715-21372	97	T5815-24142	252	T5815-44312	78	T5855-52233	240	TC22-0058B	84
T5715-21382	97	T5815-24151	253	T5815-44312	83	T5855-52244	241	TC22-0060A	85
T5715-21383	97	T5815-24161	252	T5815-44531	78	T5855-55261	187	TC22-0062A	101
T5715-23152	97	T5815-24171	94	T5815-44562	78	T5855-55261	210	TC22-0063A	95
T5715-26591	76	T5815-24232	253	T5815-44581	73	T5855-56241	223	TC22-0064B	95
T5715-26631	77	T5815-25231	84	T5815-44582	73	T5855-56261	221	TC22-0065A	95
T5715-27131	108	T5815-25412	84	T5815-44591	73	T5855-56261	223	TC22-0066A	95

https://tractormanualz.com/

PART NO.	PAGE	PART NO.	PAGE	PART NO.	PAGE	PART NO.	PAGE	PART NO.	PAGE
TC22-0067A	95	TC24-0111A	125	TC25-0103C	156	TC26-0478A	224	TC26-0947B	250
TC22-0068B	96	TC24-0113A	123	TC25-A0004A	243	TC26-0478A	225	TC26-0947C	246
TC22-0069B	96	TC24-0133A	116	TC26-0001A	175	TC26-0478B	224	TC26-0947C	250
TC22-0070B	96	TC24-0133A	125	TC26-0007B	240	TC26-0478B	225	TC26-0948A	247
TC22-0071B	96	TC24-0138A	123	TC26-0032A	201	TC26-0479A	224	TC26-0948A	251
TC22-0071C	96	TC24-0146A	125	TC26-0069A	201	TC26-0480A	224	TC26-0948B	247
TC22-0072A	96	TC24-0147A	115	TC26-0073A	244	TC26-0480A	224	TC26-0948B	251
TC22-0074B	100	TC24-0148A	123	TC26-0075A	244	TC26-0481A	225	TC26-0951A	238
TC22-0075B	100	TC24-0164A	131	TC26-0086A	192	TC26-0482A	225	TC26-1048A	230
TC22-0076A	100	TC24-0167B	118	TC26-0095A	192	TC26-0485A	225	TC26-1049A	230
TC22-0077A	100	TC24-0178A	115	TC26-0388A	167	TC26-0486A	225	TC26-1052B	241
TC22-0078A	100	TC24-0179A	115	TC26-0393B	132	TC26-0487B	219	TC26-1064A	177
TC22-0079A	100	TC24-0180A	115	TC26-0394A	198	TC26-0487C	219	TC26-1064B	177
TC22-0080A	100	TC24-0195B	129	TC26-0395A	198	TC26-0489A	227	TC26-1064BOE	177
TC22-0081B	100	TC24-0195C	129	TC26-0396A	198	TC26-0490A	227	TC26-1074A	228
TC22-0082B	87	TC24-0196B	129	TC26-0397A	198	TC26-0495A	234	TC26-1081A	255
TC22-0083B	89	TC24-0197A	131	TC26-0398A	194	TC26-0501C	192	TC26-1087A	167
TC22-0085B	98	TC24-0232A	116	TC26-0399A	194	TC26-0510A	220	TC26-1089A	167
TC22-0086B	98	TC24-0232A	126	TC26-0400A	194	TC26-0511A	254	TC26-1090A	167
TC22-0087A	98	TC24-0238A	116	TC26-0401A	194	TC26-0512A	254	TC26-1091A	167
TC22-0088B	91	TC24-0238A	117	TC26-0414A	170	TC26-0513B	254	TC26-1092A	255
TC22-0094A	89	TC24-0238A	123	TC26-0414A	183	TC26-0513C	254	TC26-1187B	250
TC22-0137A	72	TC24-0238A	123	TC26-0417A	209	TC26-0514A	254	TC26-1203A	165
TC22-0138A	72	TC24-0238A	124	TC26-0418B	185	TC26-0530A	231	TC26-1203A	165
TC22-0139A	73	TC24-0238A	124	TC26-0419B	185	TC26-0530B	231	TC26-1251A	192
TC22-0144A	89	TC24-0239A	117	TC26-0420B	209	TC26-0537A	225	TC26-1259A	237
TC24-0007A	120	TC24-0239A	122	TC26-0420C	209	TC26-0538A	181	TC26-1259B	237
TC24-0019A	121	TC24-0239A	124	TC26-0421B	186	TC26-0538A	237	TC26-1261A	237
TC24-0019A-KA	121	TC24-A0010B	127	TC26-0422D	207	TC26-0538B	181	TC26-1262A	237
TC24-0038A	123	TC25-0060A	164	TC26-0422E	207	TC26-0578A	224	TC26-1263A	237
TC24-0043A	135	TC25-0060B	164	TC26-0423A	187	TC26-0604F	219	TC26-1264A	237
TC24-0045A	121	TC25-0060C	164	TC26-0423A	210	TC26-0604G	219	TC26-1265A	237
TC24-0087A	114	TC25-0060D	142	TC26-0424A	210	TC26-0651B	186	TC26-1290A	244
TC24-0087B	114	TC25-0060D	164	TC26-0425D	190	TC26-0693B	212	TC26-1296A	201
TC24-0087C	115	TC25-0070A	140	TC26-0425E	190	TC26-0695B	214	TC26-1311A	226
TC24-0088A	115	TC25-0070B	140	TC26-0426B	212	TC26-0695C	214	TC26-1315A	247
TC24-0089A	115	TC25-0070C	140	TC26-0426BOE	212	TC26-0697B	215	TC26-1315A	251
TC24-0090A	134	TC25-0070D	140	TC26-0426COE	212	TC26-0698B	215	TC26-1348A	176
TC24-0091A	134	TC25-0070E	140	TC26-0427A	212	TC26-0704C	175	TC26-1352A	177
TC24-0098A	123	TC25-0070F	140	TC26-0431A	212	TC26-0706B	175	TC26-1352B	177
TC24-0098B	123	TC25-0071A	140	TC26-0431B	212	TC26-0708C	175	TC26-1352C	177
TC24-0104B	125	TC25-0071B	140	TC26-0443A	189	TC26-0716A	175	TC26-1352D	177
TC24-0104C	116	TC25-0071C	140	TC26-0443B	189	TC26-0722D	175	TC26-1352DOE	177
TC24-0104C	125	TC25-0071D	140	TC26-0447A	170	TC26-0722E	176	TC26-1354A	220
TC24-0106A	116	TC25-0073A	140	TC26-0447A	183	TC26-0740B	240	TC26-1358A	177
TC24-0106A	125	TC25-0073B	141	TC26-0464A	229	TC26-0743B	240	TC26-1358B	177
TC24-0107A	116	TC25-0073C	141	TC26-0464B	229	TC26-0746A	240	TC26-1362A	180
TC24-0107A	125	TC25-0073D	141	TC26-0469A	221	TC26-0749A	240	TC26-1373A	180
TC24-0108A	116	TC25-0073E	141	TC26-0469A	223	TC26-0798A	176	TC26-1373B	180
TC24-0108A	125	TC25-0080A	152	TC26-0470A	221	TC26-0942B	214	TC26-1373C	180
TC24-0109A	116	TC25-0081A	152	TC26-0471A	221	TC26-0943B	246	TC26-1384B	179
TC24-0109A	125	TC25-0095A	143	TC26-0471A	223	TC26-0943B	250	TC26-1432A	244
TC24-0110A	116	TC25-0099A	247	TC26-0472B	221	TC26-0943C	246	TC26-1433A	169
TC24-0110A	125	TC25-0103A	156	TC26-0472B	223	TC26-0943C	250	TC26-1434A	169
TC24-0111A	116	TC25-0103B	156	TC26-0473A	255	TC26-0947B	246	TC26-1438A	179

https://tractormanualz.com/

PART NO.	PAGE	PART NO.	PAGE	PART NO.	PAGE	PART NO.	PAGE	PART NO.	PAGE
TC26-1438A	226	TC26-1791A	182	U3215-81552	178				
TC26-1439A	171	TC26-1791A	249						
TC26-1439A	185	TC26-1791A	249						
TC26-1443A	205	TC26-1792A	182						
TC26-1451A	173	TC26-1794A	172						
TC26-1452A	174	TC26-1794B	172						
TC26-1472A	179	TC26-1800A	208						
TC26-1493A	173	TC26-1801A	211						
TC26-1493B	173	TC26-1802A	171						
TC26-1539A	179	TC26-1803A	171						
TC26-1541A	179	TC26-1866A	170						
TC26-1546A	179	TC26-1869A	170						
TC26-1551A	175	TC26-1870A	170						
TC26-1551AOE	175	TC26-1947A	170						
TC26-1560A	222	TC26-A0002A	257						
TC26-1560A	223	TC26-A0060A	250						
TC26-1563A	166	TC26-A0060B	250						
TC26-1563B	166	TC26-A0060C	250						
TC26-1569A	246	TC26-A0082A	252						
TC26-1570A	248	TC26-A0082B	252						
TC26-1573A	248	TC26-A0082C	252						
TC26-1614A	205	TC26-A0082D	252						
TC26-1615A	186	TC26-A0082E	252						
TC26-1624A	186	TC26-A0082F	252						
TC26-1689A	242	TC26-A0092A	246						
TC26-1690A	242	TC26-A0092B	246						
TC26-1704A	254	TC26-A0092C	246						
TC26-1717B	174	TC26-A0092D	246						
TC26-1720A	181	TC26-A0113A	249						
TC26-1720B	181	TC26-A0114A	249						
TC26-1720C	181	TD24-0008A	131						
TC26-1736A	181	TD24-0159A	117						
TC26-1736B	181	TD24-0159A	125						
TC26-1737A	181	TD25-0052A	247						
TC26-1737B	181	TD25-0140A	158						
TC26-1769A	181	TD26-1009A	168						
TC26-1769B	181	TD26-1009B	168						
TC26-1772A	181	TD26-1146A	182						
TC26-1773A	181	TE15-0112A	136						
TC26-1774A	181	TF14-0122A	117						
TC26-1774B	181	TF14-0122A	124						
TC26-1775A	182	TF14-0123A	117						
TC26-1778A	182	TF14-0123A	125						
TC26-1780A	182	TG14-0137A	130						
TC26-1781A	182	TG16-1530A	168						
TC26-1782A	182	TG16-1530A	168						
TC26-1782A	249	TG16-1530B	168						
TC26-1783A	182	TG16-1540A	168						
TC26-1783A	249	TG35-0114A	262						
TC26-1784A	182	U3210-06204	253						
TC26-1786A	182	U3215-14601	76						
TC26-1787A	182	U3215-14611	76						
TC26-1788A	182	U3215-14621	76						
TC26-1789A	182	U3215-52301	225						
TC26-1790A	182	U3215-77501	209						

https://tractormanualz.com/

INDEX 2

https://tractormanualz.com/

PARTS GROUP	GROUP NO.	PAGE	PARTS GROUP	GROUP NO.	PAGE
<CHASSIS>			PTO SHAFT COVER GROUP	TC2-G695005	203
ACCELERATOR GROUP	TC2-G648005	231	RADIATOR GROUP	TC2-G612510	208
ACCELERATOR LEVER GROUP	TC2-G648106	195	RANGE SHIFT LEVER GROUP	TC2-G640504	221
ACCELERATOR PEDAL GROUP	TC2-G648202	232	RANGE SHIFT LEVER GROUP	TC2-G640506	223
AIR CLEANER GROUP	TC2-G611018	170	REAR VIEW MIRROR GROUP	TC2-G636010	218
AIR CLEANER GROUP	TC2-G611010	183	REFLECTOR GROUP	TC2-G6F6501	205
AIR CLEANER SUPPORT GROUP	TC2-G611203	207	ROPS BAR GROUP(TELESCOPIC CHECK L	TC2-G631006	173
AUXLIARY STEP GROUP	TC2-G663001	196	SEAT GROUP	TC2-G661023	181
BATTERY FIXING GROUP	TC2-G617002	188	SEAT GROUP	TC2-G661013	237
BONNET GROUP	TC2-G615512	211	SHUTTLE LEVER GROUP	TC2-G644001	179
BONNET SIDE COVER GROUP	TC2-G615701	213	STEERING COLUMN COVER GROUP	TC2-G654002	235
BONNET SUPPORT GROUP	TC2-G616002	214	STEERING COLUMN GROUP	TC2-G653009	234
BRAKE PEDAL GROUP	TC2-G646506	230	STEERING WHEEL GROUP	TC2-G651004	233
BRAKE ROD GROUP	TC2-G646604	194	STEP MAT GROUP	TC2-G662014	238
CHECK LINK GROUP	TC2-G682011	200	STEP SEAT FRAME GROUP(MEC)	TC2-G633027	175
CLUTCH PEDAL GROUP	TC2-G646004	229	TOP LINK GROUP	TC2-G683003	201
COOLANT RESERVIOR GROUP	TC2-G612701	186	VIBRATIONPROOF RUBBER GROUP	TC2-G624002	217
DIFFERENTIAL PEDAL GROUP	TC2-G645502	228	<ELECTRICAL>		
DOUBLE ACTING VALVE LEVER GROUP	TC2-G641503	225	ALTERNATOR GROUP	TC2-G514001	148
DRAWBAR GROUP	TC2-G692015	242	BATTERY GROUP	TC2-G513501	147
DUST SHIELD PLATE GROUP	TC2-G6F4004	169	DISPLAY CONTROL GROUP	TC2-G533020	142
DUSTPROOF NET GROUP	TC2-G612603	171	DISPLAY CONTROL GROUP	TC2-G533010	164
DUSTPROOF NET GROUP	TC2-G612601	185	ENGINE ELECTRICAL GROUP(1)	TC2-G511003	136
ECU BRACKET GROUP	TC2-G617201	189	ENGINE ELECTRICAL GROUP(1)	TC2-G511001	159
FENDER(ROPS) GROUP(IND.PTO)	TC2-G635008	177	ENGINE ELECTRICAL GROUP(2)	TC2-G511502	137
FRONT AXLE FRAME GROUP	TC2-G621003	190	ENGINE ELECTRICAL GROUP(2)	TC2-G511503	138
FRONT AXLE FRAME GROUP(OS)	TC2-G621007	172	ENGINE ELECTRICAL GROUP(2)	TC2-G511501	160
FRONT WEIGHT GROUP	TC2-G6G1503	206	ENGINE ELECTRICAL GROUP(3)	TC2-G512001	144
FRONT WHEEL DRIVE LEVER GROUP	TC2-G644503	227	FUEL HEATER GROUP(WIRE)	TC2-G516002	150
FUEL COOLER GROUP	TC2-G614502	210	FUEL SENDER GROUP	TC2-G533501	156
FUEL COOLER GROUP(TC220 STAGE5)	TC2-G614505	187	GLOW CONTROL GROUP	TC2-G514501	149
FUEL FILTER GROUP	TC2-G617502	216	HEAD LAMP WIRE HARNESS GROUP	TC2-G532501	163
FUEL HOSE GROUP	TC2-G672003	241	HEAD LIGHT GROUP	TC2-G521001	162
FUEL TANK CAP GROUP	TC2-G671501	197	HORN GROUP	TC2-G534501	157
FUEL TANK GROUP	TC2-G671007	239	LIGHT CONTROL GROUP	TC2-G525004	154
INSTRUMENT COVER GROUP	TC2-G655009	236	POWER SOCKET GROUP	TC2-G527001	155
INSTRUMENT PANEL FRAME GROUP(ROP	TC2-G652012	180	PTO CONTROL GROUP	TC2-G534007	143
JOYSTICK LEVER GROUP	TC2-G642003	191	REAR COMBINATION LAMP GROUP	TC2-G522502	152
LABEL(BONNET COVER) GROUP(35HP ME	TC2-G6D1040	165	REFLECTOR GROUP	TC2-G524004	153
LABEL(FRAME) GROUP	TC2-G6D4004	204	START CONTROL GROUP	TC2-G515009	139
LABEL(MAIN/ETC) GROUP	TC2-G6D3039	167	START CONTROL GROUP	TC2-G515004	161
LABEL(MFG CERTIFICATE) GROUP	TC2-G6D2002	166	STARTER MOTOR GROUP	TC2-G513001	145
LEVER GUIDE(ROPS) GROUP	TC2-G637004	219	STARTER MOTOR GROUP	TC2-G513002	146
LIFT ROD GROUP	TC2-G684005	202	TIER4 CONTROL GROUP	TC2-G535001	158
LOWER LINK GROUP(EXTENDABLE)	TC2-G681012	198	TURN SIGNAL LAMP GROUP	TC2-G522002	151
MAIN SHIFT LEVER GROUP(SHUTTLE)	TC2-G640104	220	WIRE HARNESS GROUP	TC2-G531030	140
MUFFLER GROUP	TC2-G612006	184	<ENGINE>		
PARKING BRAKE LEVER GROUP	TC2-G645202	193	AFTER TREATMENT GROUP	EF3-G129001	29
POSITION DRAFT CONTROL LEVER GROU	TC2-G641004	224	CAMSHAFT GROUP	EF2-G109001	4

https://tractormanualz.com/

PARTS GROUP	GROUP NO.	PAGE	PARTS GROUP	GROUP NO.	PAGE
COOLING FAN GROUP	EF3-G125002	35	HYDRAULIC SYSTEM GROUP	TC2-G466004	134
COOLING FAN(CAB) GROUP	EF3-G126001	36	HYDRAULIC SYSTEM GROUP(1)	TC2-G465501	133
CRANK SHAFT GROUP	EF3-G106001	18	JOYSTICK VALVE GROUP	TC2-G441008	122
CYLINDER BLOCK GROUP	EF3-G101001	12	LIFT CONTROL VALVE(MEC) GROUP	TC2-G461001	128
CYLINDER HEAD COVER GROUP	EF3-G116003	23	LIFT CYLINDER GROUP	TC2-G463503	131
CYLINDER HEAD GROUP	EF2-G103001	2	MODULATE VALVE GROUP	TC2-G421002	118
ECU GROUP	EF2-G130001	11	POWER STEERING UNIT GROUP	TC2-G431015	114
EGR COOLER GROUP	EF2-G122003	10	SUCTION LINE GROUP	TC2-G411004	120
EGR GROUP	EF2-G119001	9	TOP LINK DEVICE GROUP	TC2-G464505	119
ELECTRICAL PARTS GROUP	EF3-G133501	31	**<OPTION>**		
ENGINE LABEL GROUP	TC2-G118008	33	ACCESSORIES_SERVICE PARTS GROUP	TC2-G6F9007	262
EPA LABEL GROUP	EF3-G132002	37	ARM REST GROUP(OPTION)	TC2-G6G4101	249
EXHAUST MANIFOLD GROUP	EF3-G121001	26	BEACON LIGHT GROUP(OPTION)	TC2-G591004	243
FLYWHEEL GROUP	EF3-G124002	28	FRONT GRILLE GUIDE GROUP	TC2-G6G2601	259
FUEL EQUIPMENT GROUP	EF3-G111501	21	FRONT ROPS GROUP(OPT.-US)	TC2-G6G3301	246
FUEL HOSE GROUP	EF3-G117005	24	FRONT ROPS GROUP(OPTION)	TC2-G632002	250
GEAR CASE COVER GROUP	EF2-G104501	3	FRONT WEIGHT GROUP	TC2-G6G1501	256
GEAR CASE GROUP	EF3-G104001	15	LIFT ROD GROUP(OPTION)	TC2-G6G2501	257
IDLE GEAR GROUP	EF2-G110001	5	MID PTO LEVER GROUP(IND. PTO)	TC2-G6G0803	252
INTAKE HOSE GROUP	EF3-G120001	34	REAR WEIGHT GROUP	TC2-G6A3001	261
INTAKE MANIFOLD GROUP	EF3-G118004	25	SUNSHADE GROUP	TC2-G6G1001	245
LABEL GROUP	EF3-G133001	30	TOOL BOX	TC2-G6F2005	244
LABEL GROUP	EH3-G181005	32	U TYPE DRAWBAR GROUP(OPTION)	TC2-G6G2801	260
OIL FILTER GROUP	EF3-G105001	17	**<STAGE5>**		
OIL GAUGE GROUP	EF3-G102503	14	AFTERTREATMENT GROUP	TC2-G115001	67
OIL PAN GROUP	EF2-G102001	1	CAMSHAFT GROUP	EH3-G123001	47
PISTON_CONNECTING ROD GROUP	EF3-G107001	20	COOLING FAN GROUP	TC2-G112003	66
REAR PLATE GROUP	EF3-G122501	27	CRANK SHAFT FULLEY GROUP	EH3-G127001	51
ROCKER ARM_VALVE GROUP	EF2-G111001	7	CRANK SHAFT GROUP	EH3-G121001	45
WATER FLANGE GROUP	EF3-G114001	22	CYLINDER BLOCK GROUP	EH3-G111001	38
WATER PUMP GROUP	EF2-G115001	8	CYLINDER HEAD COVER GROUP	EH3-G116001	43
<FRONT AXLE>			CYLINDER HEAD GROUP	EH3-G113001	39
BEVEL GEAR CASE GROUP	TC2-G314003	107	ECU GROUP	TC2-G119001	71
BEVEL PINION SHAFT GROUP	TC2-G313001	105	EGR COOLER GROUP	EH3-G172001	64
FRONT AXLE BRACKET GROUP	TC2-G332001	111	EGR GROUP	EH3-G171001	63
FRONT AXLE CASE GROUP	TC2-G316003	108	EXHAUST MANIFOLD GROUP	EH3-G133001	54
FRONT AXLE GROUP	TC2-G317005	112	FLYWHEEL GROUP	EH3-G126001	50
FRONT AXLE SUPPORT GROUP	TC2-G311003	103	FUEL EQUIPMENT GROUP	EH3-G151001	59
FRONT DIFF SYSTEM GROUP	TC2-G312001	104	FUEL FILTER GROUP	TC2-G117005	68
FRONT WHEEL GROUP	TC2-G341007	113	GEAR CASE COVER GROUP	EH3-G115001	42
STEERING CYLINDER GROUP	TC2-G321001	110	GEAR CASE GROUP	EH3-G114001	40
<HYDRAULIC>			GLOW PLUG GROUP	EH3-G191001	65
AIR BREATHER GROUP	TC2-G466501	135	IDLE GEAR GROUP	EH3-G124001	48
DOWN SPEED CONTROL GROUP	TC2-G464002	132	INTAKE HOSE GROUP	EH3-G132001	53
EXTERNAL HYDRAULIC VALVE GROUP(DS	TC2-G442012	116	INTAKE MANIFOLD GROUP	EH3-G131001	52
EXTERNAL HYDRAULIC VALVE GROUP(DS	TC2-G442006	124	MANUFACTURING LABEL GROUP	TC2-G118002	70
EXTERNAL HYDRAULIC VALVE GROUP(OP	TC2-G446014	127	OIL FILTER GROUP	EH3-G144001	58
GEAR PUMP GROUP	TC2-G412002	121	OIL GAUGE GROUP	EH3-G143001	57
HYDRAULIC CYLINDER GROUP	TC2-G463011	129	OIL PAN GROUP	EH3-G142001	56

https://tractormanualz.com/

PARTS GROUP	GROUP NO.	PAGE	PARTS GROUP	GROUP NO.	PAGE
OIL PUMP GROUP	EH3-G141001	55			
PISTON_CONNECTING ROD GROUP	EH3-G122001	46			
REAR PLATE GROUP	EH3-G118001	44			
ROCKER ARM_VALVE GROUP	EH3-G125001	49			
WATER FLANGE GROUP	EH3-G162001	61			
WATER PUMP GROUP	EH3-G163001	62			
<TRANSMISSION>					
BRAKE GROUP	TC2-G293003	80			
CLUTCH GROUP	TC2-G211005	90			
CLUTCH HOUSING GROUP	TC2-G222007	93			
CLUTCH RELEASE GROUP	TC2-G212008	91			
FRONT COVER GORUP	TC2-G221001	92			
FRONT WHEEL DRIVE FORK GROUP	TC2-G2B2001	83			
FRONT WHEEL DRIVE SHAFT GROUP	TC2-G2B1003	78			
MAIN SHIFT FORK GROUP	TC2-G242002	97			
MAIN SHIFT SHAFT GROUP	TC2-G241002	95			
PROPELLER SHAFT GROUP	TC2-G331004	73			
PTO CLUTCH GROUP	TC2-G2C3003	88			
PTO INPUT SHAFT GROUP	TC2-G2C1003	87			
PTO SHAFT GROUP	TC2-G2C4007	84			
PTO SHIFT FORK GROUP	TC2-G2C5003	85			
RANGE SHIFT FORK GROUP	TC2-G272001	74			
RANGE SHIFT SHAFT GROUP	TC2-G271006	72			
REAR AXLE GROUP	TC2-G2A1001	81			
REAR DIFF LOCK GROUP	TC2-G283003	77			
REAR DIFFERENTIAL GROUP	TC2-G282001	75			
REAR WHEEL GROUP	TC2-G2G1003	86			
SHUTTLE SHAFT GROUP	TC2-G251002	99			
SHUTTLE SHIFT FORK GROUP	TC2-G252002	101			
SPIRAL BEVEL GEAR GROUP	TC2-G281005	102			
TRANSMISSION CASE GROUP	TC2-G224011	94			

https://tractormanualz.com/