TABLE OF CONTENTS

[ENGINE]

EH2-G181005	LABEL GROUP	1
TD2-G112007	COOLING FAN GROUP	2
TD2-G118009	ENGINE LABEL GROUP	3
F5800-G010A	CYLINDER BLOCK GROUP	4
F5800-G020A	OILPAN GROUP	6
F6800-G025A	GAUGE,OIL GROUP	7
F5830-G030A	CYLINDER HEAD GROUP	8
F5800-G040A	GEAR CASE GROUP	10
F5800-G040B	GEAR CASE GROUP	12
F6800-G045A	Gearcase Cover Group	15
F6800-G050A	OIL FILTER GROUP	16
F5800-G060A	CRANK SHAFT GROUP	17
F5800-G070A	Piston & Connecting rod Group	18
F5800-G090A	CAMSHAFT GROUP	19
F6800-G100A	IDLE GEAR GROUP	20
F5800-G110A	Rocker Arm & Valve Group	23
F5830-G120A	Fuel Equipment Group	24
F5830-G130A	Water flange Group	26
F6800-G140A	WATER PUMP GROUP	28
F5830-G150A	CYLINDER HEAD COVER GROUP	29
F5830-G160B	Fuel Filter & Pipe Group	30
F5830-G170A	INLET MANIFOLD GROUP	31
F5830-G175A	EGR GROUP	32
F5830-G180A	Intake Pipe Group	33
F5800-G190A	EXHAUST MANIFOLD GROUP	34
F5800-G200A	EGR Cooler Group	35
F5831-G210A	Flywheel_housing Group	36
F5810-G220A	FLYWHEEL GROUP	37
F5830-G230A	COOLING FAN GROUP	38
F5800-G240A	Turbo Charger Group	39
F5800-G245A	TURBO PIPE GROUP	40
F5830-G250A	Aftertreatment Group	41
F5800-G260A	ECU & Sensors Group	42
F5800-G270A	Electric part Group	43
F5805-G310A	EPA EEC LABEL GROUP	44

https://tractormanualz.com/

F6805-G320A	LABEL GROUP	46
EF2-G102501	OIL GAUGE GROUP	47
EF3-G102502	OIL GAUGE GROUP	48
EF1-G132002	EPA EEC LABEL GROUP	49

[STAGE5]

EH2-G111001	CYLINDER BLOCK GROUP	50
EH2-G113001	CYLINDER HEAD GROUP	51
EH2-G114001	GEAR CASE GROUP	52
EH2-G115001	GEAR CASE COVER GROUP	54
EH2-G116001	CYLINDER HEAD COVER GROUP	55
EH2-G117001	FLYWHEEL HOUSING GROUP	56
EH2-G121001	CRANK SHAFT GROUP	57
EH2-G122001	PISTON_CONNECTING ROD GROUP	58
EH2-G123001	CAMSHAFT GROUP	59
EH2-G124001	IDLE GEAR GROUP	60
EH2-G125001	ROCKER ARM_VALVE GROUP	62
EH2-G126001	FLYWHEEL GROUP	63
EH2-G127002	CRANK SHAFT FULLEY GROUP	64
EH2-G131001	INTAKE MANIFOLD GROUP	65
EH2-G132002	INTAKE HOSE GROUP	66
EH2-G133001	EXHAUST MANIFOLD GROUP	67
EH2-G134001	TURBO GROUP	68
EH2-G135001	TURBO PIPE GROUP	69
EH2-G141001	OIL PUMP GROUP	70
EH2-G142001	OIL PAN GROUP	71
EH2-G143001	OIL GAUGE GROUP	72
EH2-G144001	OIL FILTER GROUP	73
EH2-G151001	FUEL EQUIPMENT GROUP	74
EH2-G161001	OIL JET GROUP	76
EH2-G162001	WATER FLANGE GROUP	77
EH2-G163001	WATER PUMP GROUP	78
EH2-G171001	EGR GROUP	79
EH2-G172001	EGR COOLER GROUP	80
EH2-G191001	GLOW PLUG GROUP	81
TD2-G117001	FUEL FILTER GROUP	82
TD2-G113001	INTAKE PIPE GROUP	83

https://tractormanualz.com/

TD2-G112001	COOLING FAN GROUP	84
TD2-G115001	AFTERTREATMENT GROUP	85
TD2-G118004	MANUFACTURING LABEL GROUP	86
TD2-G119001	ECU GROUP	87

[TRANSMISSION]

TD2-G222002	CLUTCH HOUSING GROUP	88
TD2-G211001	CLUTCH GROUP	90
TD2-G212001	CLUTCH RELEASE GROUP	91
TD2-G222005	CLUTCH HOUSING GROUP	92
TD2-G223001	MID CASE GROUP	93
TD2-G224004	TRANSMISSION CASE GROUP	94
TD2-G232001	DRIVE SHAFT GROUP	95
TD2-G241001	MAIN SHIFT SHAFT GROUP	96
TD2-G242001	MAIN SHIFT FORK GROUP	98
TD2-G251001	SHUTTLE SHAFT GROUP	100
TD2-G252001	SHUTTLE SHIFT FORK GROUP	102
TD2-G271002	RANGE SHIFT SHAFT GROUP	103
TD2-G272002	RANGE SHIFT FORK GROUP	105
TD2-G281002	SPIRAL BEVEL PINION SHAFT GROUP	107
TD2-G282001	REAR DIFFERENTIAL GROUP	108
TD2-G283001	REAR DIFFERENTIAL LOCK GROUP	111
TD2-G293003	BRAKE GROUP	112
TD2-G2A1001	REAR AXLE GROUP	113
TD2-G2B1002	FRONT WHEEL DRIVE SHAFT GROUP	115
TD2-G2C1001	PTO INPUT SHAFT GROUP	117
TD2-G2C4002	PTO SHAFT GROUP	118
TD2-G2C3001	PTO CLUTCH GROUP	119
TD2-G2C5002	PTO SHIFT FORK GROUP	121
TD2-G2G1002	REAR WHEEL GROUP	122
TD2-G224001	TRANSMISSION CASE GROUP	123

[FRONT AXLE]

T5520-G310A	BEVEL PINION SHAFT GROUP	125
TD2-G311001	FRONT AXLE SUPPORT GROUP	126
TD2-G312001	FRONT DIFF SYSTEM GROUP	127
TD2-G313002	BEVEL PINION SHAFT GROUP	129

https://tractormanualz.com/

TD2-G314001	BEVEL GEAR CASE GROUP	131
TD2-G315001	BEVEL GEAR SHAFT GROUP	133
TD2-G316001	FRONT AXLE CASE GROUP	134
TD2-G317001	FRONT AXLE GROUP	136
TD2-G321001	STEERING CYLINDER GROUP	137
TD2-G322001	STEERING CYLINDER COVER GROUP	138
TD2-G332001	FRONT AXLE BRACKET GROUP	139
TD2-G331001	PROPELLER SHAFT GROUP	141
TD2-G341004	FRONT WHEEL GROUP	142

[HYDRAULIC]

TD2-G411001	SUCTION LINE GROUP	143
TD2-G412001	GEAR PUMP GROUP	144
TD2-G421007	MODULATE VALVE GROUP	145
TD2-G431001	POWER STEERING UNIT GROUP	147
TD2-G442004	EXTERNAL DRAW VALVE GROUP	149
TD2-G443001	HYDRAULIC BLOCK GROUP	150
TD2-G461001	LIFT CONTROL VALVE(MEC) GROUP	152
TD2-G463003	HYDRAULIC CYLINDER GROUP	153
TD2-G463501	HYDRAULIC CYLINDER GROUP	154
TD2-G464001	HYDRAULIC CYLINDER GROUP	156
TD2-G464502	TOP LINK DEVICE GROUP	157
TD2-G465001	OIL INLET TUBE GROUP	158
TD2-G465502	HYDRAULIC SYSTEM GROUP(1)	159

[ELECTRICAL]

TD2-G511502	ENGINE ELECTRICAL GROUP(2)	161
TD2-G516001	FUEL HEATER OPTION GROUP	162
TD2-G521002	HEAD LIGHT GROUP	163
TD2-G522001	TURN SIGNAL LAMP GROUP	164
TD2-G525002	LIGHT CONTROL GROUP	165
TD2-G511002	ENGINE ELECTRICAL GROUP(1)	166
TD2-G511503	ENGINE ELECTRICAL GROUP(2)	167
TD2-G512001	ENGINE ELECTRICAL GROUP(3)	168
TD2-G513003	STARTER MOTOR GROUP	169
TD2-G513501	BATTERY GROUP	170
TD2-G514001	ALTERNATOR GROUP	171

https://tractormanualz.com/

TD2-G514501	GLOW CONTROL GROUP	172
TD2-G515002	START CONTROL GROUP	173
TD2-G515503	SAFETY STARTER GROUP	174
TD2-G516002	FUEL HEATER GROUP	175
TD2-G522002	TURN SIGNAL LAMP GROUP	176
TD2-G522502	REAR COMBINATION LAMP GROUP	177
TD2-G524003	REFLECTOR GROUP	178
TD2-G525004	LIGHT CONTROL GROUP	179
TD2-G525507	7 PIN SOCKET GROUP	180
TD2-G526002	FRONT WORKING LAMP GROUP(OPTION)	181
TD2-G531024	WIRE HARNESS GROUP	182
TD2-G531702	NEUTRAL WIRE HARNESS GROUP	183
TD2-G532502	HEAD LAMP WIRE HARNESS GROUP	184
TD2-G533001	DISPLAY CONTROL GROUP	185
TD2-G533501	FUEL SENDER GROUP	186
TD2-G534002	PTO CONTROL GROUP	187
TD2-G534502	HORN GROUP	188
TD2-G535001	TIER4 CONTROL GROUP	189
TD2-G522501	REAR COMBINATION LAMP GROUP	190
TD200C-G860A	ELECTRICAL SYSTEM GROUP	191
TD2-G6D3002	LABEL(MAIN/ETC) GROUP	193
TD2-G511001	ENGINE ELECTRICAL GROUP(1)	195
TD2-G511501	ENGINE ELECTRICAL GROUP(2)	196
TD2-G513001	STARTER MOTOR GROUP	197
TD2-G521001	HEAD LIGHT GROUP	198
TD2-G531003	DOUBLE ACTING VALVE LEVER GROUP	199
TD2-G531501	POWER SOCKET GROUP	200
TD2-G532501	HEAD LAMP WIRE HARNESS GROUP	201

[CHASSIS]

TD2-G6A2002	FRONT WEIGHT GROUP(OPTION)	202
TD2-G6D1014	LABEL(BONNET COVER) GROUP	203
TD2-G6D2011	LABEL(MFG CERTIFICATE) GROUP	204
TD2-G6F4503	REAR VIEW MIRROR GROUP	205
TD2-G6F9003	ACCESSORIES_SERVICE PARTS GROUP	206
TD2-G612509	RADIATOR GROUP	207
TD2-G614505	FUEL COOLER GROUP	209

https://tractormanualz.com/

TD2-G615502	BONNET GROUP	210
TD2-G621009	FRONT AXLE FRAME GROUP	213
TD2-G623007	CABIN SUPPORT GROUP	214
TD2-G661002	SEAT GROUP	215
TD2-G661010	SEAT GROUP	216
TD2-G662002	STEP MAT GROUP	218
TD2-G662003	STEP MAT GROUP	219
TD2-G694004	TOWING GROUP	220
TD2-G611001	AIR CLEANER GROUP	221
TD2-G611202	AIR CLEANER SUPPORT GROUP	222
TD2-G612002	MUFFLER GROUP	223
TD2-G612501	RADIATOR GROUP	224
TD2-G612701	COOLANT RESERVIOR GROUP	226
TD2-G614503	FUEL COOLER GROUP	227
TD2-G616001	BONNET SUPPORT GROUP	228
TD2-G616101	BONNET LATCH GROUP	229
TD2-G617001	BATTERY FIXING GROUP	230
TD2-G617201	ECU BRACKET GROUP	231
TD2-G621001	FRONT AXLE FRAME GROUP	232
TD2-G623001	CABIN SUPPORT GROUP	233
TD2-G624001	VIBRATIONPROOF RUBBER GROUP	234
TD2-G637003	LEVER GUIDE(ROPS) GROUP	235
TD2-G640101	MAIN SHIFT LEVER GROUP	237
TD2-G640502	RANGE SHIFT LEVER GROUP	238
TD2-G641002	RANGE SHIFT LEVER GROUP	239
TD2-G644002	SHUTTLE LEVER GROUP	240
TD2-G644501	FRONT WHEEL DRIVE LEVER GROUP	241
TD2-G645201	HAND PARKING BRAKE GROUP	242
TD2-G645501	DIFFERENTIAL PEDAL GROUP	243
TD2-G646001	CLUTCH PEDAL GROUP	244
TD2-G646501	BRAKE PEDAL GROUP	245
TD2-G648102	ACCELERATOR LEVER GROUP	247
TD2-G648201	ACCELERATOR PEDAL GROUP	248
TD2-G648501	EXTERNAL POSITION ADJUSTING LEVER GROUP	249
TD2-G652001	INSTRUMENT PANEL FRAME GROUP	250
TD2-G653002	INSTRUMENT PANEL FRAME GROUP	252
TD2-G654001	STEERING COLUMN COVER GROUP	253

https://tractormanualz.com/

TD2-G655001	INSTRUMENT COVER GROUP	254
TD2-G663001	AUXLIARY STEP GROUP	255
TD2-G671001	FUEL TANK GROUP	256
TD2-G681003	LOWER LINK GROUP	258
TD2-G682002	CHECK LINK GROUP	259
TD2-G683001	TOP LINK GROUP	260
TD2-G684003	LIFT ROD GROUP	261
TD2-G614501	FUEL COOLER GROUP	262
TD2-G631002	ROPS BAR GROUP	263
TD2-G633002	STEP SEAT FRAME GROUP	265
TD2-G651002	STEERING WHEEL GROUP	268
TD2-G692001	DRAWBAR GROUP	269
TD2-G694008	TOWING GROUP	271
TD2-G6D4002	LABEL(FRAME) GROUP	272
TD2-G6F0502	SMV BRACKET GROUP	273

[CABIN]

TD200C-G820A	CABIN GROUP	274
TD200C-G825A	FRONT GLASS GROUP	275
TD200C-G830A	DOOR GROUP	277
TD200C-G835A	SIDE GLASS GROUP	280
TD200C-G840A	REAR GLASS GROUP	281
TD200C-G850A	WIPER MOTOR GROUP	283
TD200C-G855A	HEATER GROUP	284
TD200C-G865A	OPTION GROUP	286
TD200C-G870A	MOUNTING GROUP	287
TD2-G6H1002	JOYSTICK VALVE GROUP	289
TD2-G6C2502	ROOF GROUP	290
TC2-G223002	WIPER(REAR) GROUP(OPTION)	292

[OPTION]

TC2-G6G4101	ARM REST GROUP(OPTION)	294
TD2-G446003	HYDRAULIC BLOCK GROUP	295
TD2-G446004	HYDRAULIC BLOCK GROUP	297
TD2-G523002	REAR WORKING LAMP GROUP	299
TD2-G525503	7 PIN SOCKET GROUP	300
TD2-G526501	FRONT WORKING LAMP GROUP(OPTION)	301

https://tractormanualz.com/

TD2-G527002 POWER SOCKET GROUP 302
TD2-G681005 LOWER LINK GROUP 303
TD2-G632001 FRONT ROPS GROUP(OPTION) 305
TD200C-G880A Interior material group(option) 307
CK30C-T2200A CD PLAYER GROUP(OPTION) 308
TD2-G6G0701 SUNSHADE GROUP 310
TD2-G6A3001 REAR WEIGHT GROUP 311
TD2-G446001 HYDRAULIC BLOCK GROUP 312
TD2-G446002 HYDRAULIC BLOCK GROUP 314
TC2-G591002 OPTIONAL LAMP GROUP 316

INDEX1 317
INDEX2 330

https://tractormanualz.com/

EH2-G181005

LABEL GROUP

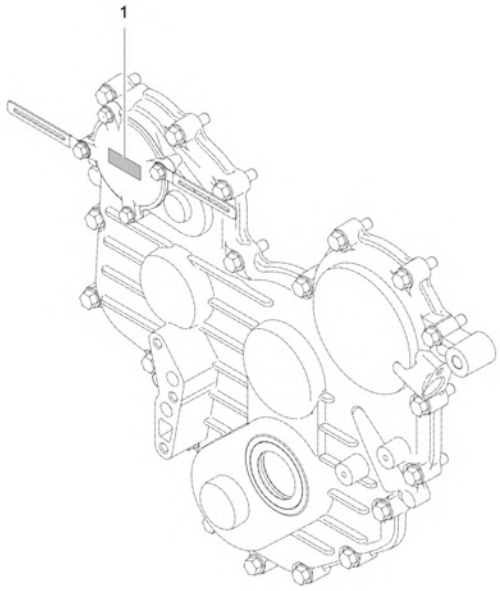

A : DK4510

No.	Part Number	Description	Qty A	Qty B	Qty C	Qty D	Qty E	I.C	Remark
1	EF15-0005B	LABEL, FIE SYSTEM	1						

----> Old replace New
<---> Interchangeable
* Please place an order assy(*)
<---- New replace Old
<-O-> Interchangeable with another part(s)
<-X-> Not interchangeable

https://tractormanualz.com/

TD2-G112007

COOLING FAN GROUP

A : DK4510

No.	Part Number	Description	Qty A	Qty B	Qty C	Qty D	Qty E	I.C	Remark
1	E5616-74252ED	PULLEY, FAN	1						
2	E5850-74151	COLLAR,FAN	1						
3	E6520-74111	FAN, COOLING v	1						
4	01023-50680	BOLT v	4						
5	EH16-0003A	BELT, FAN	1						REC GREEN -1 LA43

----> Old replace New
<---- New replace Old
<-X-> Not interchangeable
<---> Interchangeable
<-O-> Interchangeable with another part(s)
* Please place an order assy(*)

https://tractormanualz.com/

TD2-G118009

ENGINE LABEL GROUP

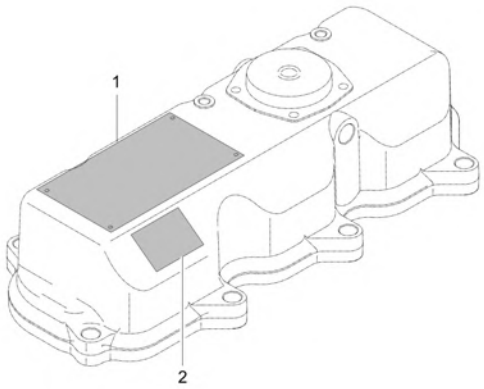

A : DK4510

No.	Part Number	Description	Qty A	Qty B	Qty C	Qty D	Qty E	I.C	Remark
1	EH28-0013A	LABEL, EPA CERTIFICATE-(KIOTI)	1						
1	EH28-0013B	LABEL, EPA CERTIFICATE	1					<------	
2	F6805-99521	LABEL KIOTI	1						T=0.05-0.08
2	E5608-99522	LABEL KIOTI	1					<------	

----> Old replace New
<---- New replace Old
<-X-> Not interchangeable
<---> Interchangeable
<-O-> Interchangeable with another part(s)
* Please place an order assy(*)

https://tractormanualz.com/

F5800-G010A

CYLINDER BLOCK GROUP

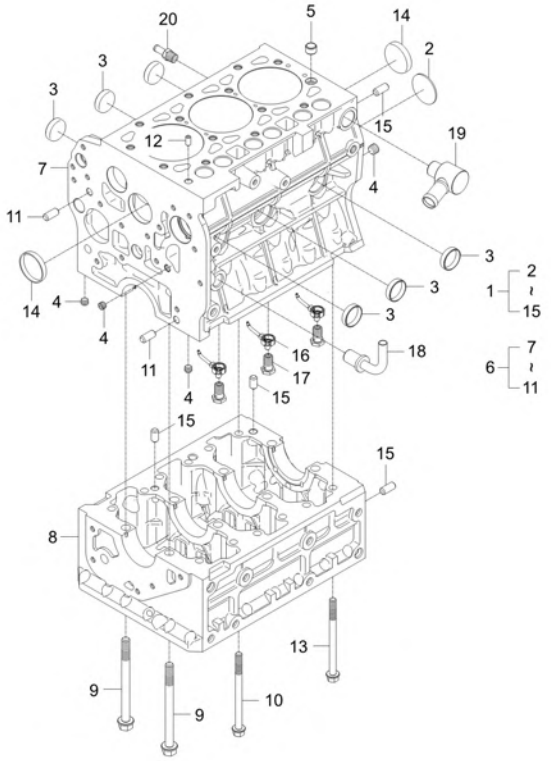

A : DK4510

No.	Part Number	Description	Qty A	Qty B	Qty C	Qty D	Qty E	I.C	Remark
1	F5800-01003	ASSY BLOCK,CYLINDER	1						N
1	F5800-01004	ASSY BLOCK,CYLINDER	1					<------	N
1	F5800-01005	ASSY BLOCK,CYLINDER	1					<------	-
1	F5800-01006	ASSY BLOCK,CYLINDER	1					<------	-
1	F5800-01007	ASSY BLOCK,CYLINDER	1					<------	-
1	F5800-01008	ASSY BLOCK,CYLINDER	1					<----->	-
2	06311-75045	PLUG	1						T2*48*48
3	15221-0338-3	CAP, SEALING	6						-
4	E5900-96021	OBS USE E5900-96022	4						N
4	E5900-96022	PLUG	4					<----->	-
5	E6301-33812	PIN, PIPE	1						N
6	F5800-A0014	ASSY BLOCK,CYLINDER	1						
6	F5800-01108	CYLINDERBLOCKSUBASSY dnr v	1					<----->	-
7	F5800-01113	CYLINDER BLOCK	1						N
7	F5800-01114	CYLINDER BLOCK	1					<------	-
7	F5800-01115	CYLINDER BLOCK	1					<------	-
7	F5800-01116	CYLINDER BLOCK	1					<----->	-
8	F5800-01122	LADDER FRAME	1						N

----> Old replace New <---- New replace Old <-X-> Not interchangeable
<---> Interchangeable <-O-> Interchangeable with another part(s)
* Please place an order assy(*)

https://tractormanualz.com/

F5800-G010A

CYLINDER BLOCK GROUP

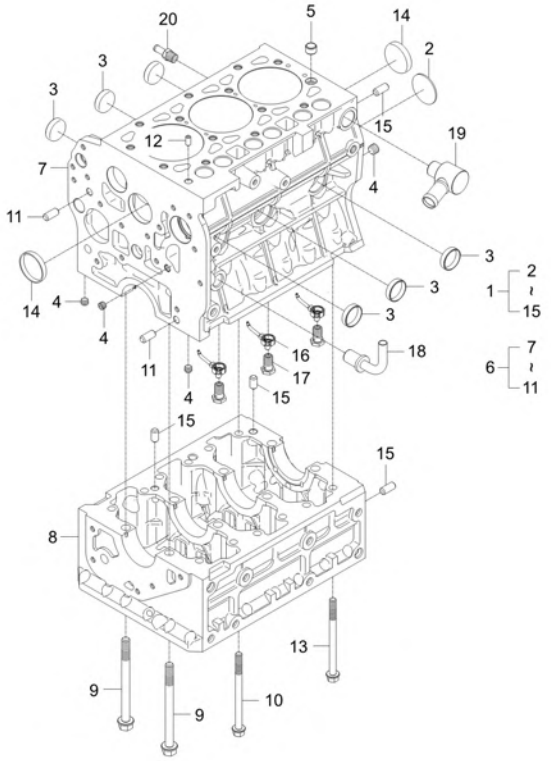

A : DK4510

No.	Part Number	Description	Qty A	Qty B	Qty C	Qty D	Qty E	I.C	Remark
8	F5800-01123	LADDER FRAME	1					<------	N
8	F5800-01124	LADDER FRAME	1					<------	-
9	F6800-90111	BOLT, MAIN BEARING	8						N
10	F6800-90121	BOLT, LADDER FRAME	4						-
11	05012-01018	PIN, STRAIGHT	2						
12	F6800-33651	PIN	1						-
13	F6800-90121	BOLT, LADDER FRAME	8						-
14	15221-0339-2	CAP SEALING	2						-
15	05012-01018	PIN, STRAIGHT	4						
16	F6800-01311	BODY, PISTON COOLING JET	3						
17	F6800-01321	VALVE, PISTON COOLING JET	3						
18	E6500-33062	TUBE 3, OIL	1						-
18	E6500-33063	PIPE, OIL-3	1					<------	-
19	F6800-20702	COOLANT CONNECTOR ASSY v	1						N
19	F6800-20703	COOLANT CONNECTOR ASSY	1					<----->	-
20	F6800-73341	JOINT, HOSE	1						

----> Old replace New
<---- New replace Old
<-X-> Not interchangeable
<---> Interchangeable
<-O-> Interchangeable with another part(s)
* Please place an order assy(*)

https://tractormanualz.com/

F5800-G020A

OILPAN GROUP

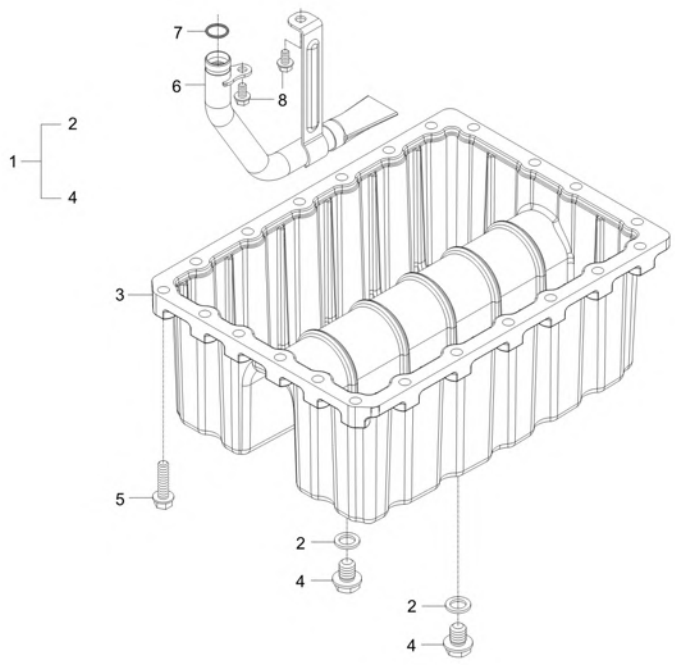

A : DK4510

No.	Part Number	Description	Qty A	Qty B	Qty C	Qty D	Qty E	I.C	Remark
1	F5800-01601	ASSY FAN,OIL v	1						
2	E6303-33661	GASKET	2						2.0t
3	F5800-01611	FAN,OIL	1						
4	E6303-33751	PLUG	2						-
4	E6303-33752	PLUG	2					<------	-
5	01654-50835	BOLT	22						M8x1.25
6	F5800-32111	OIL STRAINER ASSY	1						
7	04811-00150	O RING v	1						
8	01754-50610	BOLT, FLANGE	2						M6XP1.0

----> Old replace New
<---- New replace Old
<-X-> Not interchangeable
<---> Interchangeable
<-O-> Interchangeable with another part(s)
* Please place an order assy(*)

https://tractormanualz.com/

F6800-G025A

GAUGE,OIL GROUP

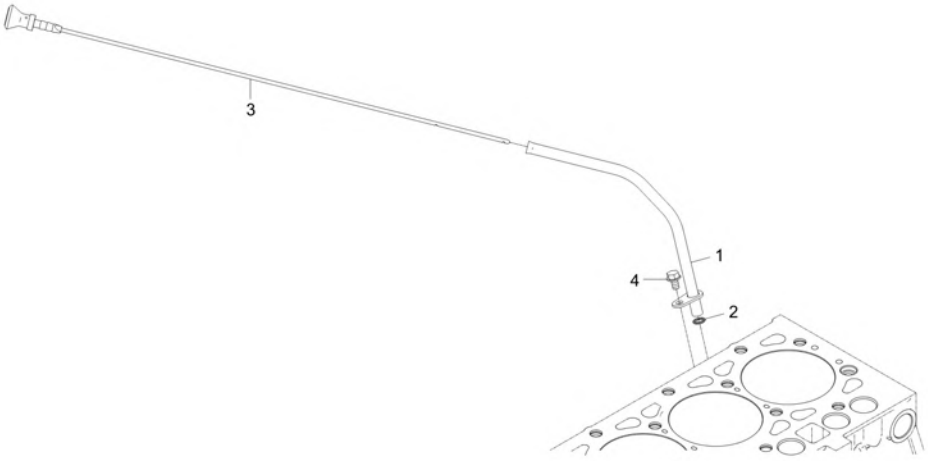

A : DK4510

No.	Part Number	Description	Qty A	Qty B	Qty C	Qty D	Qty E	I.C	Remark
1	F5800-36421	OIL GAUGE GUIDE ASSY	1						
1	F5800-36422	OIL GAUGE GUIDE ASSY	1					<----->	
2	04811-00100	O RING	1						
3	F5800-36411	GAUGE,OIL dnr v	1						N
3	F5800-36412	OIL GAUGE	1					<----->	-
3	F5800-36413	GAUGE,OIL	1					<----->	-
3	F5800-36414	GAUGE,OIL	1					<----->	-
4	01754-50610	BOLT, FLANGE	1						M6XP1.0

----> Old replace New
<----> Interchangeable
* Please place an order assy(*)
<---- New replace Old
<-O-> Interchangeable with another part(s)
<-X-> Not interchangeable

https://tractormanualz.com/

F5830-G030A

CYLINDER HEAD GROUP

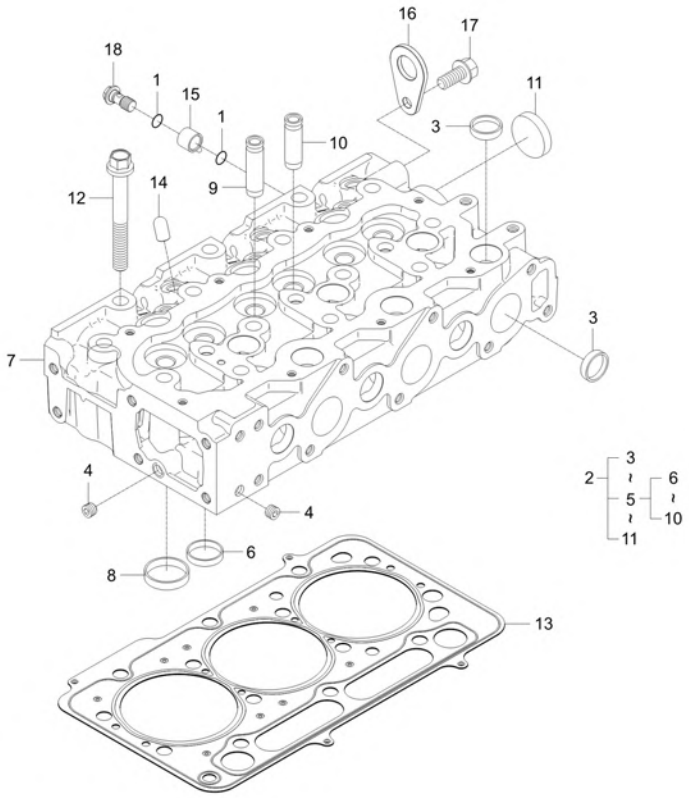

A : DK4510

No.	Part Number	Description	Qty A	Qty B	Qty C	Qty D	Qty E	I.C	Remark
1	04814-00160	O RING	2						
2	F5800-03042	ASSY HEAD, CYLINDER	1						
2	F5800-03043	ASSY HEAD,CYLINDER	1					<----->	
2	F5800-03044	ASSY HEAD,CYLINDER	1					<----->	
3	15221-0337-3	CAP SEALING	9						T1.6*40*40
4	E5900-96021	OBS USE E5900-96022	2						N
4	E5900-96022	PLUG	2					<----->	-
5	F5800-03052	CYLINDER HEAD SUB ASSY	1						N
5	F5800-03053	CYLINDER HEAD SUB ASSY	1					<----->	-
5	F5800-03054	CYLINDER HEAD SUB ASSY	1					<----->	-
6	E6700-13622	SEAT EXHAUST VALVE	3						
7	F5800-03112	CYLINDER HEAD	1						N
7	F5800-03113	CYLINDER HEAD	1					<----->	-
8	E6700-13611	SEAT INTAKE VALVE	3						
9	E6810-13581	GUIDE, INTAKE VALVE v	3						
10	E6810-13561	GUIDE, VALVE	3						
11	15221-0349-3	CAP SEALING	1						T1.6*60*60
12	F6800-03451	BOLT,CYLINDER HEAD	14						

----> Old replace New <---- New replace Old <-X-> Not interchangeable
<---> Interchangeable <-O-> Interchangeable with another part(s)
* Please place an order assy(*)

https://tractormanualz.com/

F5830-G030A

CYLINDER HEAD GROUP

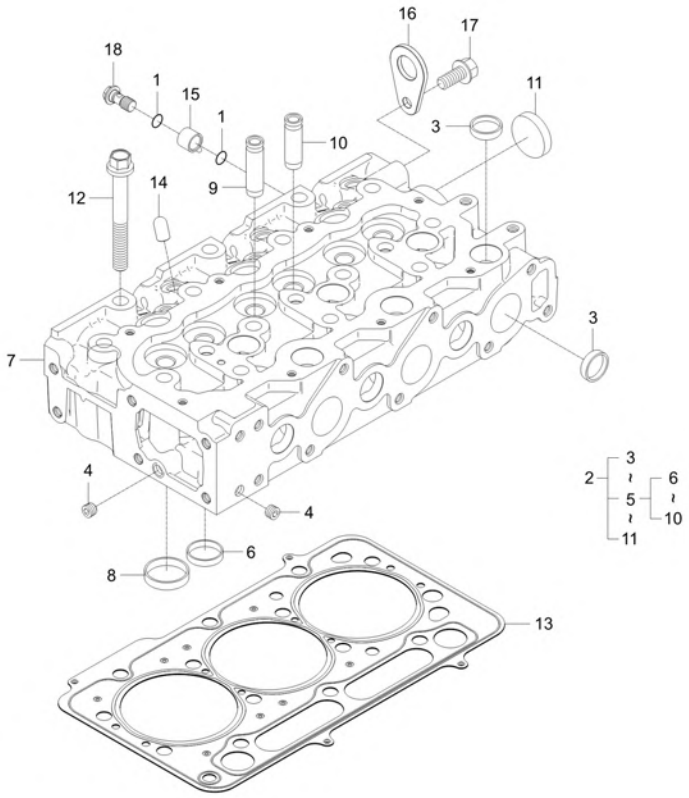

A : DK4510

No.	Part Number	Description	Qty A	Qty B	Qty C	Qty D	Qty E	I.C	Remark
13	F5800-03311	GASKET,HEAD	1						
14	F6800-03501	HINGE, INJECTOR CLAMP	3						
15	F5850-73341	CONNECTOR, COOLANT	1						
16	15221-0175-1	ENGINE HOOK	1						T4*40*64
17	01754-50816	BOLT, FLANGE	1						M8XP1.25
18	T4260-62552	JOINT BOLT	1						

----> Old replace New
<----> Interchangeable
* Please place an order assy(*)
<---- New replace Old
<-O-> Interchangeable with another part(s)
<-X-> Not interchangeable

https://tractormanualz.com/

F5800-G040A

GEAR CASE GROUP

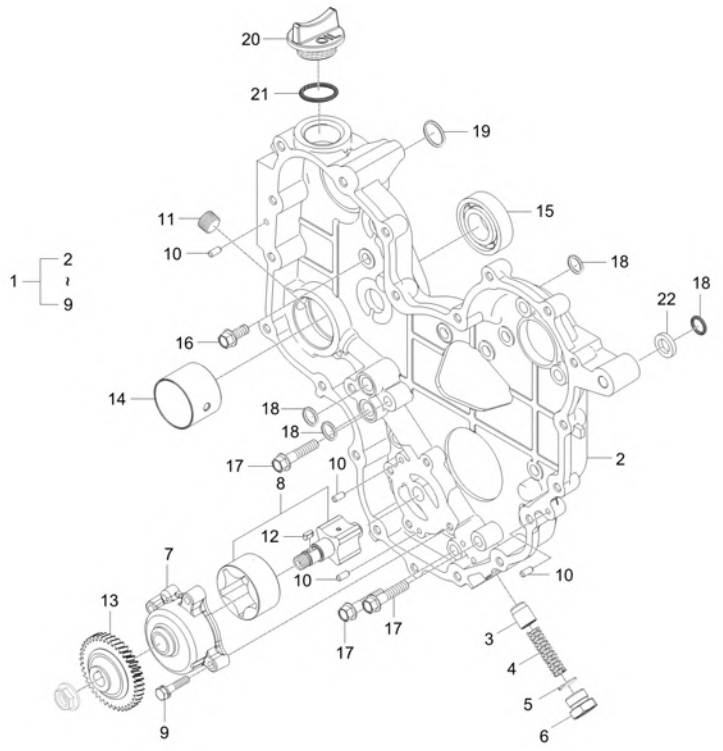

A : DK4510

No.	Part Number	Description	Qty A	Qty B	Qty C	Qty D	Qty E	I.C	Remark
1	F6800-04102	ASSY CASE,GEAR obs v	1						N
1	F6800-04103	obs v Part is obsolete per Miss Yuk	1					<--O-->	N
1	F6800-04104	ASSY CASE GEAR dnr v	1					<----->	-
1	F6800-04105	ASSY CASE,GEAR	1					<----->	-
1	F6800-04106	ASSY CASE GEAR v	1					<----->	-
1	F6800-04107	ASSY CASE,GEAR	1					<----->	-
1	F6800-04108	ASSY CASE,GEAR	1					<----->	-
2	F6800-04112	GEAR CASE	1						N
2	F5800-04111	GEAR CASE v obs	1					<--O-->	N
2	F5800-04112	GEAR CASE	1					<----->	-
2	F5800-04113	GEAR CASE v	1					<----->	-
2	F5800-04114	GEAR CASE v	1					<----->	-
2	F5800-04115	GEAR CASE	1					<----->	-
3	F6800-04711	PLUNGER, RELIEF VALVE dnr v	1						
4	F6800-04721	SPRING RELIEF VALVE	1						DIA1.8
5	04811-00160	O RING	1						DIA15.8
6	F6800-04731	PLUG, RELIEF VALVE	1						N
7	F6800-04301	COVER, OIL PUMP	1						N

----> Old replace New <---- New replace Old <-X-> Not interchangeable
<---> Interchangeable <-O-> Interchangeable with another part(s)
* Please place an order assy(*)

https://tractormanualz.com/

F5800-G040A

GEAR CASE GROUP

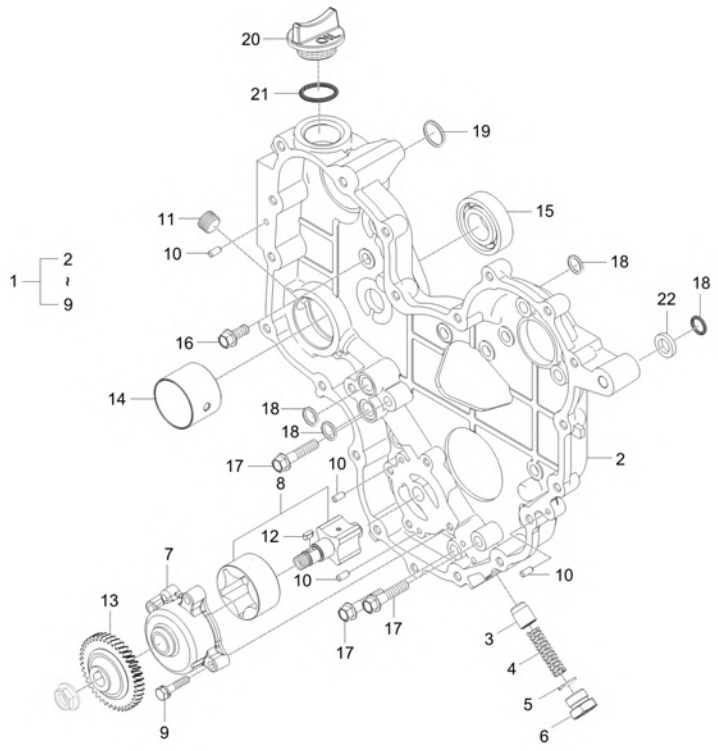

A : DK4510

No.	Part Number	Description	Qty A	Qty B	Qty C	Qty D	Qty E	I.C	Remark
8	F6800-04401	OIL PUMP ROTOR SHAFT ASSY	1						N
9	01754-50625	BOLT, FLANGE	4						7T
10	05012-00510	PIN,STRAIGHT	4						
11	E5800-96031	PLUG	1						PT3/8
12	05712-00410	KEY	1						5*5*14
13	F6800-35661	GEAR, OIL PUMP	1						-
14	F6800-04501	BUSH, PTO SHAFT	1						
15	08101-06205	BEARING BALL dnr v	1						DIA25
16	01754-50816	BOLT, FLANGE	11						M8XP1.25
17	01754-50835	BOLT v	3						
18	04811-00150	O RING v	3						
19	04811-00220	O RING	2						
20	E5500-33142	PLUG, OIL FILLER	1						
21	04811-50300	O RING v	1						G30
22	F5800-64101	COLLAR	1						

----> Old replace New <---- New replace Old <-X-> Not interchangeable
<---> Interchangeable <-O-> Interchangeable with another part(s)
* Please place an order assy(*)

https://tractormanualz.com/

F5800-G040B

GEAR CASE GROUP

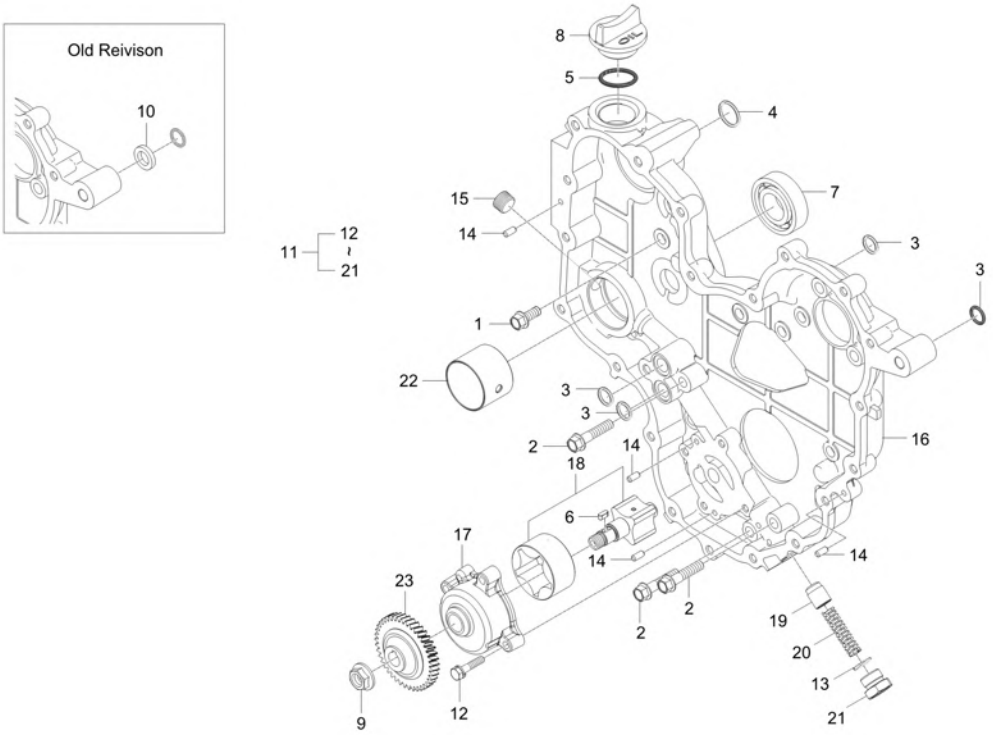

A : DK4510

No.	Part Number	Description	Qty A	Qty B	Qty C	Qty D	Qty E	I.C	Remark
1	01754-50816	BOLT, FLANGE	11 PR7600001 ~ UR7600016						M8XP1.25
1	01754-50816	BOLT, FLANGE	10					<------	M8XP1.25
2	01754-50835	BOLT v	3						
3	04811-00150	O RING v	3						
3	04816-00150	O_RING	3					<------	DIA14.8
4	04811-00220	O RING	2						
4	04816-00220	O_RING dnr v	2 TR7600099 ~ WR7600104					<------	DIA21.8
5	04811-50300	O RING v	1						G30
6	05712-00410	KEY	1						5*5*14
7	08101-06205	BEARING BALL dnr v	1						DIA25
8	E5500-33142	PLUG, OIL FILLER	1						
9	E6300-35681	FLANGE NUT	1						M12*P1.25
10	F5800-64101	COLLAR	1						
11	F6800-04103	obs v Part is obsolete per Miss Yuk	1						N
11	F6800-04104	ASSY CASE GEAR dnr v	1					<------	-
11	F6800-04105	ASSY CASE,GEAR	1					<----->	-
11	F6800-04106	ASSY CASE GEAR v	1					<----->	-
11	F6800-04107	ASSY CASE,GEAR	1					<----->	-

----> Old replace New
<---- New replace Old
<-X-> Not interchangeable
<---> Interchangeable
<-O-> Interchangeable with another part(s)
* Please place an order assy(*)

https://tractormanualz.com/

F5800-G040B

GEAR CASE GROUP

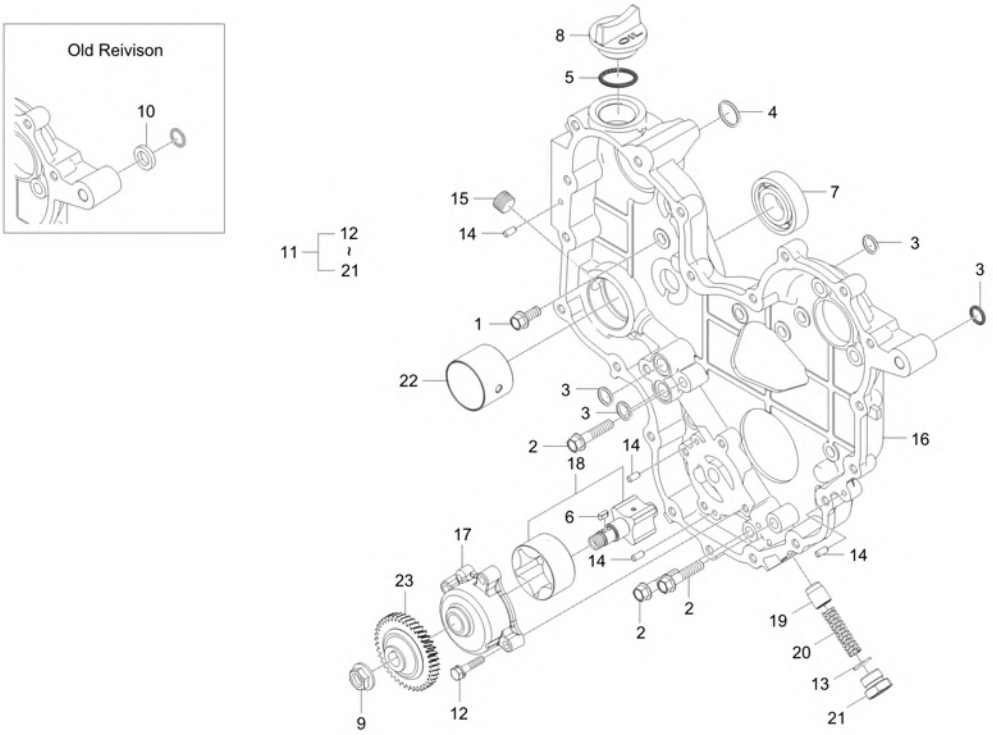

A : DK4510

No.	Part Number	Description	Qty A	Qty B	Qty C	Qty D	Qty E	I.C	Remark
11	F6800-04108	ASSY CASE,GEAR	1					<----->	-
11	F6800-04109	ASSY CASE,GEAR	1					<----->	-
12	F5800-04111	GEAR CASE v obs	1						N
12	F5800-04112	GEAR CASE	1					<------	-
12	F5800-04113	GEAR CASE v	1					<----->	-
12	F5800-04114	GEAR CASE v	1					<----->	-
12	F5800-04115	GEAR CASE	1					<----->	-
12	F5800-04116	GEAR CASE	1					<----->	-
13	F6800-04711	PLUNGER, RELIEF VALVE dnr v	1						
13	F6800-04712	PLUNGER, RELIEF VALVE	1					<----->	-
14	F6800-04721	SPRING RELIEF VALVE	1						DIA1.8
15	04811-00160	O RING	1						DIA15.8
16	F6800-04731	PLUG, RELIEF VALVE	1						N
17	F6800-04301	COVER, OIL PUMP	1						N
17	F6800-04302	COVER, OIL PUMP	1					<----->	-
18	F6800-04401	OIL PUMP ROTOR SHAFT ASSY	1						N
19	01754-50625	BOLT, FLANGE	4						7T
20	05012-00510	PIN,STRAIGHT	4						

----> Old replace New <---- New replace Old <-X-> Not interchangeable
<---> Interchangeable <-O-> Interchangeable with another part(s)
* Please place an order assy(*)

https://tractormanualz.com/

F5800-G040B

GEAR CASE GROUP

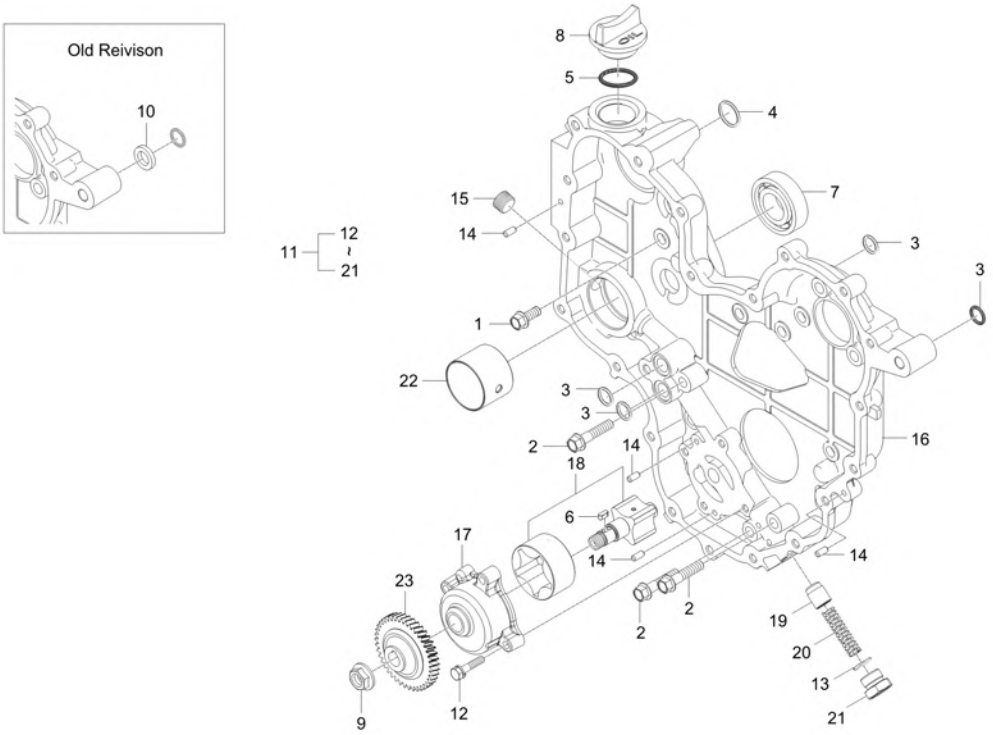

A : DK4510

No.	Part Number	Description	Qty A	Qty B	Qty C	Qty D	Qty E	I.C	Remark
21	E5800-96031	PLUG	1						PT3/8
21	E5800-96032	PLUG	1					<------	PT3/8
22	F6800-04501	BUSH, PTO SHAFT	1						
23	F6800-35661	GEAR, OIL PUMP	1						-

----> Old replace New
<---- New replace Old
<-X-> Not interchangeable
<---> Interchangeable
<-O-> Interchangeable with another part(s)
* Please place an order assy(*)

https://tractormanualz.com/

F6800-G045A

Gearcase Cover Group

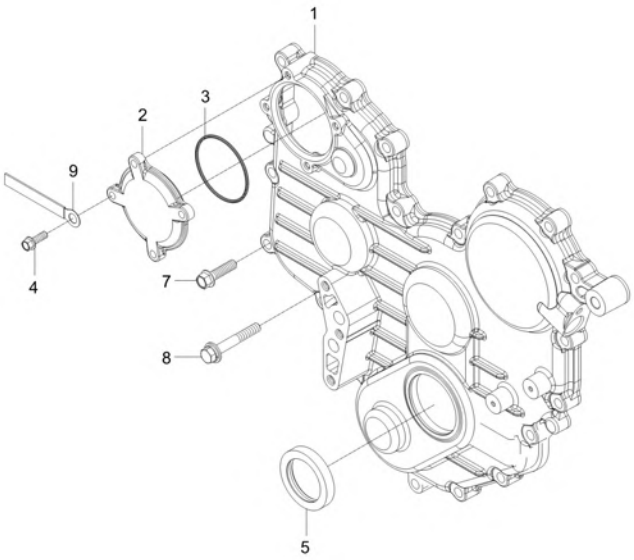

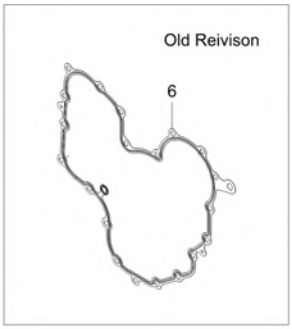

A : DK4510

No.	Part Number	Description	Qty A	Qty B	Qty C	Qty D	Qty E	I.C	Remark
1	F6800-04213	COVER, GEAR CASE dnr v	1						N
1	F6800-04214	COVER, GEAR CASE dnr v	1					<------	-
1	F6800-04215	COVER, GEAR CASE v	1					<----->	-
2	F6800-04251	COVER, HP PUMP GEAR	1						
3	04811-06630	O RING	1						Dia63
4	01754-50616	BOLT, FLANGE v	4						M6*P1.0
5	E5500-11302	OIL SEAL	1						
6	F6800-04221	LIQUID GASKET USED, OBS - GASKET, GEARCASE COVER	1						
7	01754-50830	BOLT FLANGE	20						M8*P1.25
8	01125-50855	BOLT	1						
9	34150-2939-1	CLAMP, WIRE	2						-

----> Old replace New
<---- New replace Old
<-X-> Not interchangeable
<---> Interchangeable
<-O-> Interchangeable with another part(s)
* Please place an order assy(*)

https://tractormanualz.com/

F6800-G050A

OIL FILTER GROUP

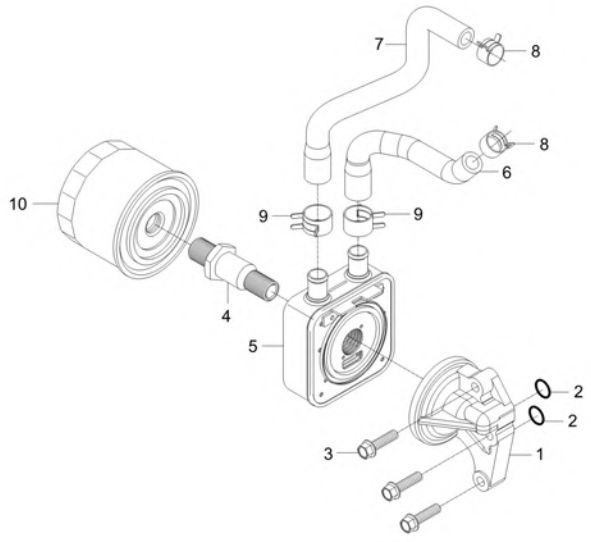

A : DK4510

No.	Part Number	Description	Qty A	Qty B	Qty C	Qty D	Qty E	I.C	Remark
1	E5850-32616	SUPPORT,OIL FILTER	1						N
1	E5850-32617	SUPPORT,OIL FILTER	1					<------	-
2	04811-00150	O RING v	2						
2	04816-00150	O_RING	2					<------	DIA14.8
3	01754-50830	BOLT FLANGE	3						M8*P1.25
4	E6810-32292	TUBE, CONNECTING	1						N
5	E6820-32451	COOLER, OIL	1						-
6	F6800-16161	HOSE 1, OIL COOLER	1						
7	F6800-16172	HOSE 2, OIL COOLER	1						N
8	09318-88180	CLAMP, HOSE	2						
9	09318-88220	O-RING	2						
10	E6201-32443	OIL FILTER sp v	1						

----> Old replace New
<---- New replace Old
<-X-> Not interchangeable
<---> Interchangeable
<-O-> Interchangeable with another part(s)
* Please place an order assy(*)

https://tractormanualz.com/

F5800-G060A

CRANK SHAFT GROUP

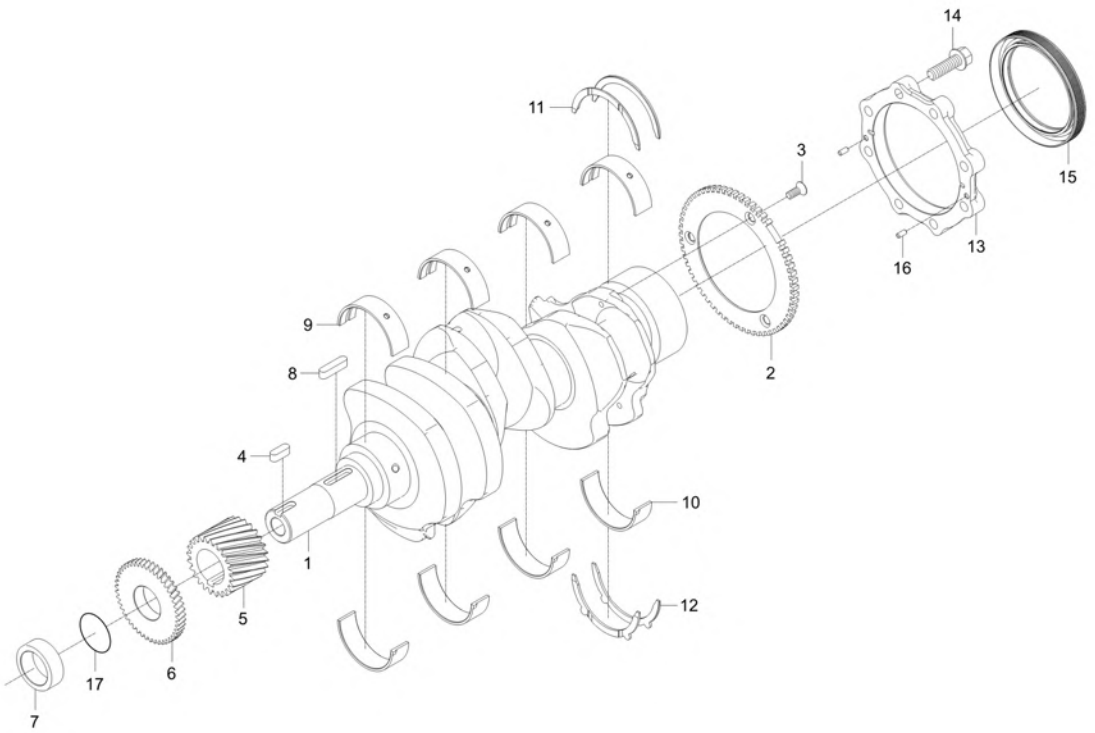

A : DK4510

No.	Part Number	Description	Qty A	Qty B	Qty C	Qty D	Qty E	I.C	Remark
1	F5800-23111	SHAFT CRANK dnr v	1						
2	F5800-06201	WHEEL, CRANK POSITION SENSOR	1						
3	03016-50616	SCREW	3						M6XP1.0
4	05712-00730	KEY	1						W7XL30
5	F6800-24111	CRANKSHAFT GEAR	1						
6	F6800-35631	GEAR OIL PUMP DRIVE	1						
7	19202-2325-1	CRANKSHAFT COLLAR	1						DIA44*20
7	19202-2325-2	SPACER	1					<----->	DIA44*20
8	05712-00720	KEY	1						8*8*24
9	F6800-23481	BEARING, CRANKSHAFT UPR	4						
10	F6800-23491	BEARING, CRANKSHAFT LWR	4						
11	F6800-23531	BEARING, CRANKSHAFT THRUST UPR	2						
12	F6800-23541	BEARING, CRANKSHAFT THRUST LWR	2						
13	F6800-04811	CASE,OIL SEAL	1						
14	01654-50830	FLANGE BOLT	8						7T
15	E5500-04464	OIL SEAL v	1						
16	05012-00408	STRAIGHT PIN	2						
17	04811-10300	O RING	1						

----> Old replace New
<---- New replace Old
<-X-> Not interchangeable
<---> Interchangeable
<-O-> Interchangeable with another part(s)
* Please place an order assy(*)

https://tractormanualz.com/

F5800-G070A

Piston & Connecting rod Group

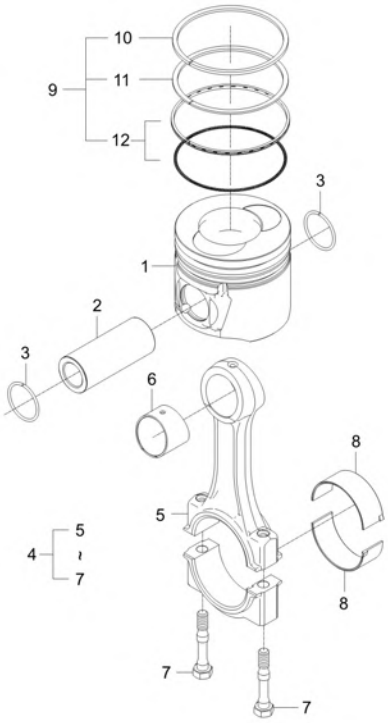

A : DK4510

No.	Part Number	Description	Qty A	Qty B	Qty C	Qty D	Qty E	I.C	Remark
1	F6800-21111	PISTON	3						
2	F6800-21311	PIN, PISTON	3						
3	F6800-21331	RING, SNAP	6						
4	F6800-22011	CONNECTING ROD	3						
5	F6800-22111	CONNECTINGROD	1						N
6	F6800-21351	BUSH,PISTON PIN	1						
7	F6800-22141	BOLT	2						N
8	F6800-22312	BEARING, CONNECTING ROD	6						N
8	EF15-0004A	BEARING, CONNECTING ROD	6					<----->	
9	E6302-21051	PISTON RING Assy	3						
10	E6302-21151	RING 1, PISTON v	1						
11	E6302-21161	RING 2, PISTON	1						
12	E6301-21202	ASSY,OIL RING	1						

----> Old replace New
<----> Interchangeable
* Please place an order assy(*)
<---- New replace Old
<-O-> Interchangeable with another part(s)
<-X-> Not interchangeable

https://tractormanualz.com/

F5800-G090A

CAMSHAFT GROUP

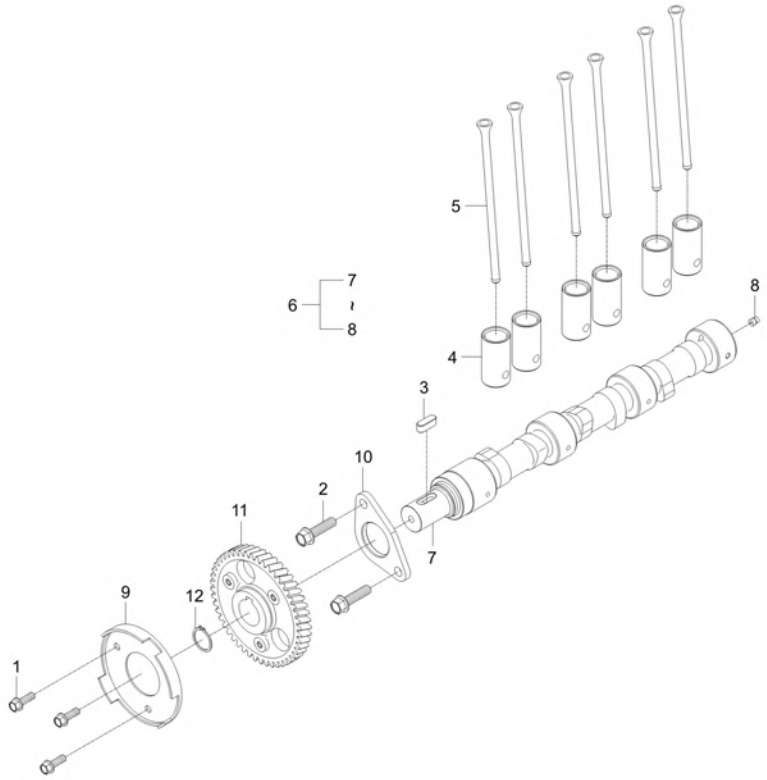

A : DK4510

No.	Part Number	Description	Qty A	Qty B	Qty C	Qty D	Qty E	I.C	Remark
1	01754-50612	BOLT, FLANGE	3						M6*1.0
2	01754-50830	BOLT FLANGE	2						M8*P1.25
3	05712-00720	KEY	1						8*8*24
4	E5500-15553	TAPPET	6						DIA26*51
5	F6800-15111	ROD PUSH v	6						
6	F5800-16012	ASSY CAMSHAFT v	1						N
7	F5800-16152	CAMSHAFT	1						N
8	06350-00607	PLUG v	2						
9	F6800-09051	WHEEL, CAMSHAFT SENSOR	1						2T
10	F6800-16271	STOP, CAM SHAFT	1						
11	F6800-16511	CAMSHAFT GEAR	1						
12	E5205-24321	SNAP RING	1						T2

----> Old replace New
<---- New replace Old
<-X-> Not interchangeable
<---> Interchangeable
<-O-> Interchangeable with another part(s)
* Please place an order assy(*)

https://tractormanualz.com/

F6800-G100A

IDLE GEAR GROUP

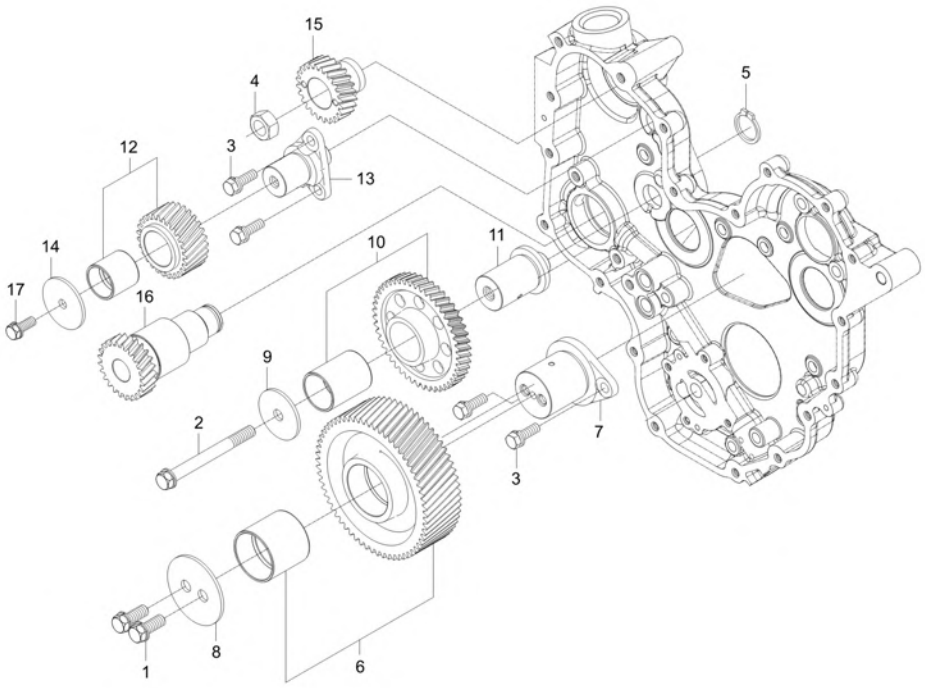

A : DK4510

No.	Part Number	Description	Qty A	Qty B	Qty C	Qty D	Qty E	I.C	Remark
1	01133-51018	WITH WASHER BOLT	2						
1	01123-50870	WASHER BOLT	2					<------	
2	01133-51090	BOLT	1						P1.25
3	01754-50822	BOLT, FLANGE	4						
4	F6800-92771	FLANGE NUT	1						M14x1.5
4	F6800-92771	FLANGE NUT	1					<----->	M14x1.5
5	15471-9536-1	SNAP_RING	1						
6	F6800-10101	IDLE GEAR ASSY, 1	1						
6	F5850-10102	Assy IDLE GEAR1	1					<------	-
7	F6800-10153	SHAFT, IDLE GEAR 1	1						N
7	F6800-10154	SHAFT, IDLE GEAR 1 dnr v	1					<------	-
7	F6800-10155	SHAFT,IDLEGEAR1 v	1					<----->	-
8	F6800-10161	STOPPER, IDLE GEAR 1	1						
8	F6800-10162	STOPPER 1, IDLE GEAR	1					<------	-
8	F6800-10163	STOPPER 1, IDLE GEAR	1					<----->	-
9	F6800-10261	STOPPER, IDLE GEAR 2	1						
10	F6800-10301	IDLE GEAR ASSY, 3	1						
11	F6800-10351	SHAFT, IDLE GEAR 3	1						

----> Old replace New <---- New replace Old <-X-> Not interchangeable
<---> Interchangeable <-O-> Interchangeable with another part(s)
* Please place an order assy(*)

https://tractormanualz.com/

F6800-G100A

IDLE GEAR GROUP

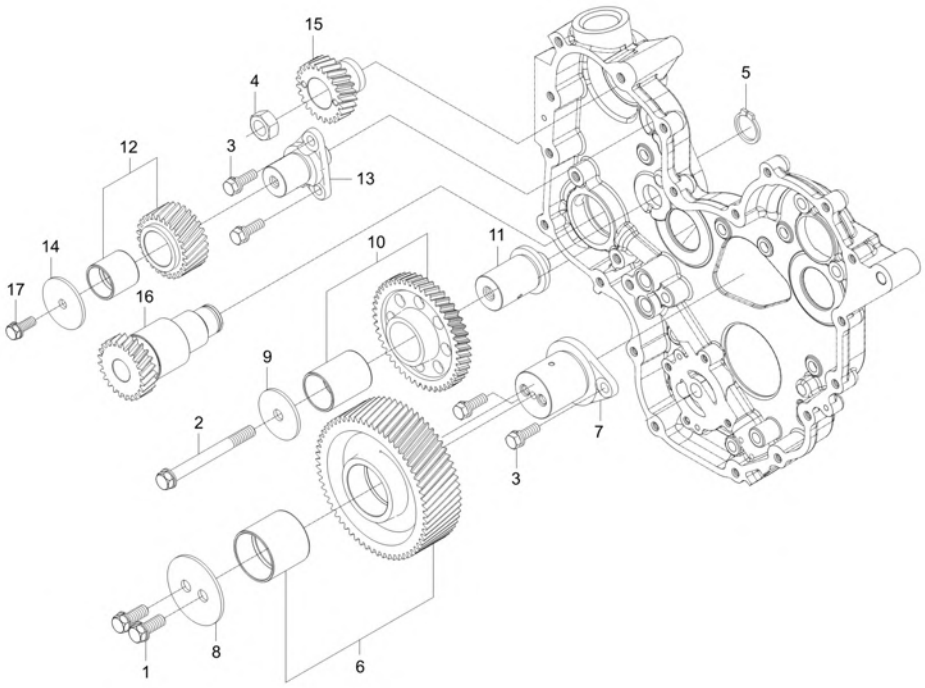

A : DK4510

No.	Part Number	Description	Qty A	Qty B	Qty C	Qty D	Qty E	I.C	Remark
11	F6800-10352	SHAFT 3, IDLE GEAR dnr v	1					<------	-
11	F6800-10353	SHAFT 3, IDLE GEAR v	1					<----->	-
12	F6800-10401	IDLE GEAR ASSY, 4	1						
13	F6800-10452	SHAFT, IDLE GEAR 4 v	1						N
13	F6800-10453	SHAFT, IDLE GEAR 4 dnr v	1					<------	-
13	F6800-10454	SHAFT, IDLE GEAR 4	1					<------	-
13	F6800-10455	SHAFT,IDLEGEAR4 v	1					<----->	-
14	F6800-10461	STOPPER, IDLE GEAR 4	1						
14	F6800-10261	STOPPER, IDLE GEAR 2	1					<------	
15	F6800-10502	GEAR, HP FUEL PUMP	1						N
16	F6800-10611	GEAR, HYDRAULIC PUMP DRIVE	1						
16	F6800-10612	GEAR, HYDRAULIC PUMP DRIVE	1					<----->	-
17	01123-50816	Hex Head Cap Screw	1 SR7600065 ~ UR7600016						M8XP1.25
17	EF15-0039A	BOLT, WITH WASHER	1					<------	-
18	F6800-91011	FLANGE BOLT dnr v	4						
18	F6800-91011	FLANGE BOLT dnr v	5					<------	
18	EF15-0030A	FLANGE BOLT v	5					<------	
18	EF15-0030A	FLANGE BOLT v	2					<------	

----> Old replace New
<---- New replace Old
<-X-> Not interchangeable
<---> Interchangeable
<-O-> Interchangeable with another part(s)
* Please place an order assy(*)

https://tractormanualz.com/

F6800-G100A

IDLE GEAR GROUP

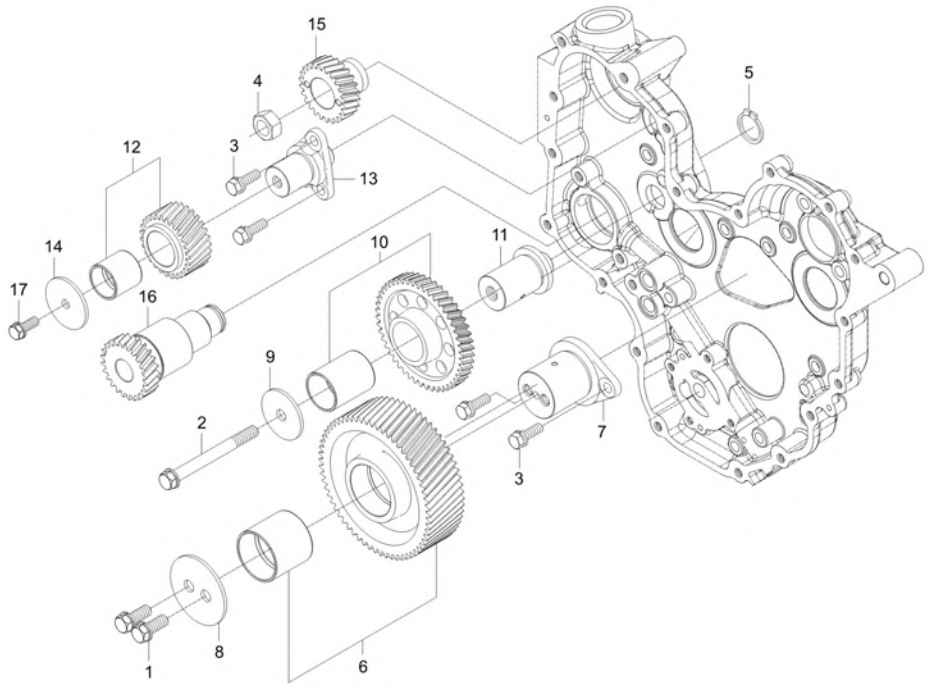

A : DK4510

No.	Part Number	Description	Qty A	Qty B	Qty C	Qty D	Qty E	I.C	Remark
19	EF15-0029A	NORD-LOCK WASHER v	2						
19	EF15-0029A	NORD-LOCK WASHER v	3					<------	
20	EF15-0038A	BOLT, FLANGE	3						-

----> Old replace New
<---- New replace Old
<-X-> Not interchangeable
<---> Interchangeable
<-O-> Interchangeable with another part(s)
* Please place an order assy(*)

https://tractormanualz.com/

F5800-G110A

Rocker Arm & Valve Group

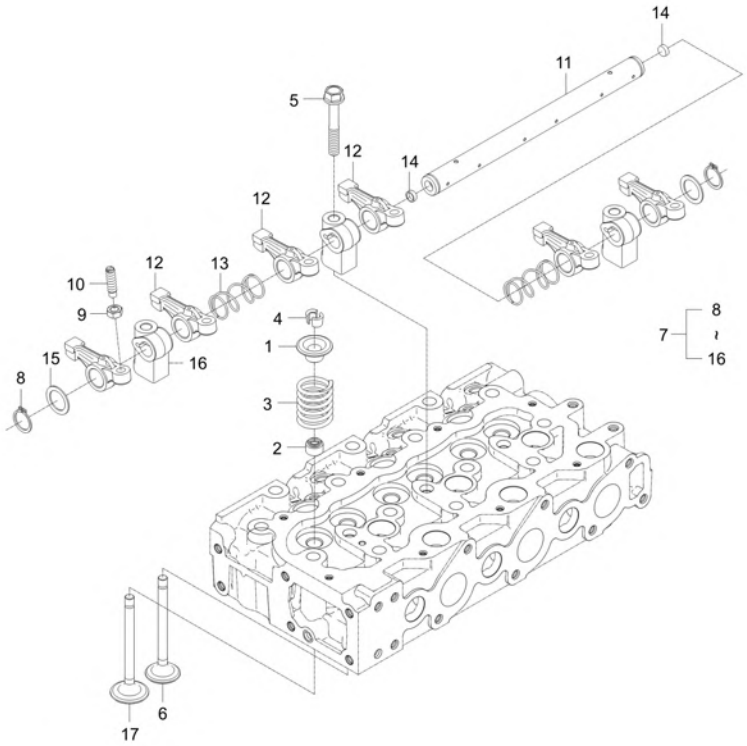

A : DK4510

No.	Part Number	Description	Qty A	Qty B	Qty C	Qty D	Qty E	I.C	Remark
1	E5500-13333	RETAINER VALVE SPRING v	6						
2	E6301-13151	SEAL, VALVE STEM	6						
3	E6400-13241	SPRING, VALVE	6						
4	E6403-13361	COLLET,VALVE SPRING v	12						KK8(독일 TRW)
5	E6510-91502	BOLT,(R/A SUPPORT) v	3						
6	E6700-13121	EXHAUST VALVE v	3						
7	F5800-14001	ASSY ARM,ROCKER	1						
8	04612-00190	SNAP RING	2						
9	15021-1424-1	NUT	6						HEX12,M8*1.0*11
10	E5500-14232	SCREW,ADJUSTING	6						DIA10,M8*1.0*34
11	E5800-14261	SHAFT,ROCKER ARM	1						
12	E6301-14111	ROCKERARM	6						
13	E6301-14311	ROCKERARM SPRING	2						
14	E6301-14331	CAP, SEALING obs v	2						
15	E6301-14431	PLAIN WASHER	2						T1.2*30*30
16	F6800-14351	BRACKET, ROCKER ARM	3						
17	E6700-13111	VALVE, INTAKE	3						

----> Old replace New <---- New replace Old <-X-> Not interchangeable
<---> Interchangeable <-O-> Interchangeable with another part(s)
* Please place an order assy(*)

https://tractormanualz.com/

F5830-G120A

Fuel Equipment Group

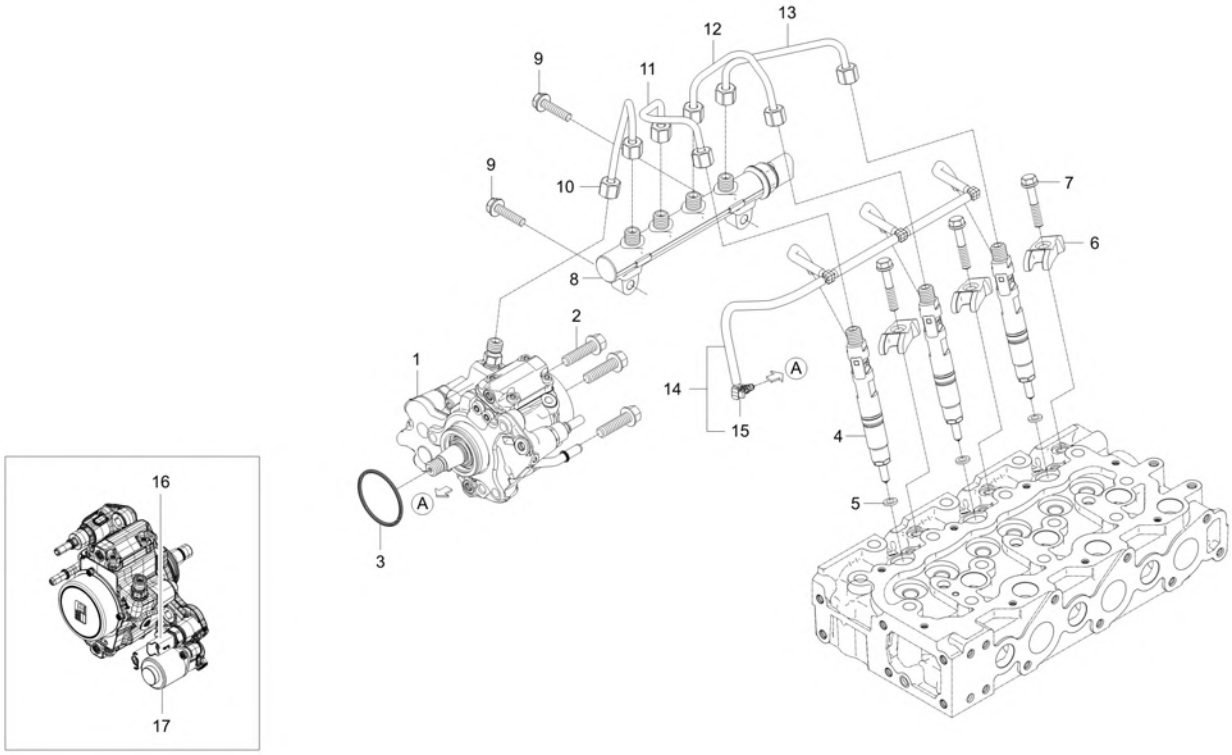

A : DK4510

No.	Part Number	Description	Qty A	Qty B	Qty C	Qty D	Qty E	I.C	Remark
1	F6800-12104	HP FUEL PUMP ASSY v	1						
2	01754-50835	BOLT v	3						M8XP1.25
3	04811-50500	O RING	1						
4	F6805-53001	INJECTOR ASS'Y v	3						N
5	F6800-53181	SEAT, INJECTOR	3						t2.0
5	EF36-0011A	SEAT,INJECTOR	3					<------	t=2.5
6	F6805-53451	CLMAP, INJECTOR v	3						
6	F6805-53452	CLMAP, INJECTOR v	3					<----->	
6	F6805-53453	CLAMP, INJECTOR	3					<----->	
7	F6800-53471	BOLT, INJECTOR CLMAP	3						
8	F5800-12203	FUEL RAIL ASSY	1						
9	01754-50830	BOLT FLANGE	2						M8XP1.25
10	F5800-12252	PIPE, RAIL	1						
11	F6800-53722	PIPE 2, INJECTION	1						
12	F6800-53732	PIPE 3, INJECTION	1						
13	F6800-53742	PIPE 4, INJECTION	1						
14	F5800-42501	INJECTOR RETURN TUBE ASSY	1						
15	F6800-42511	CONNECTOR	1						

----> Old replace New <---- New replace Old <-X-> Not interchangeable
<---> Interchangeable <-O-> Interchangeable with another part(s)
* Please place an order assy(*)

https://tractormanualz.com/

F5830-G120A

Fuel Equipment Group

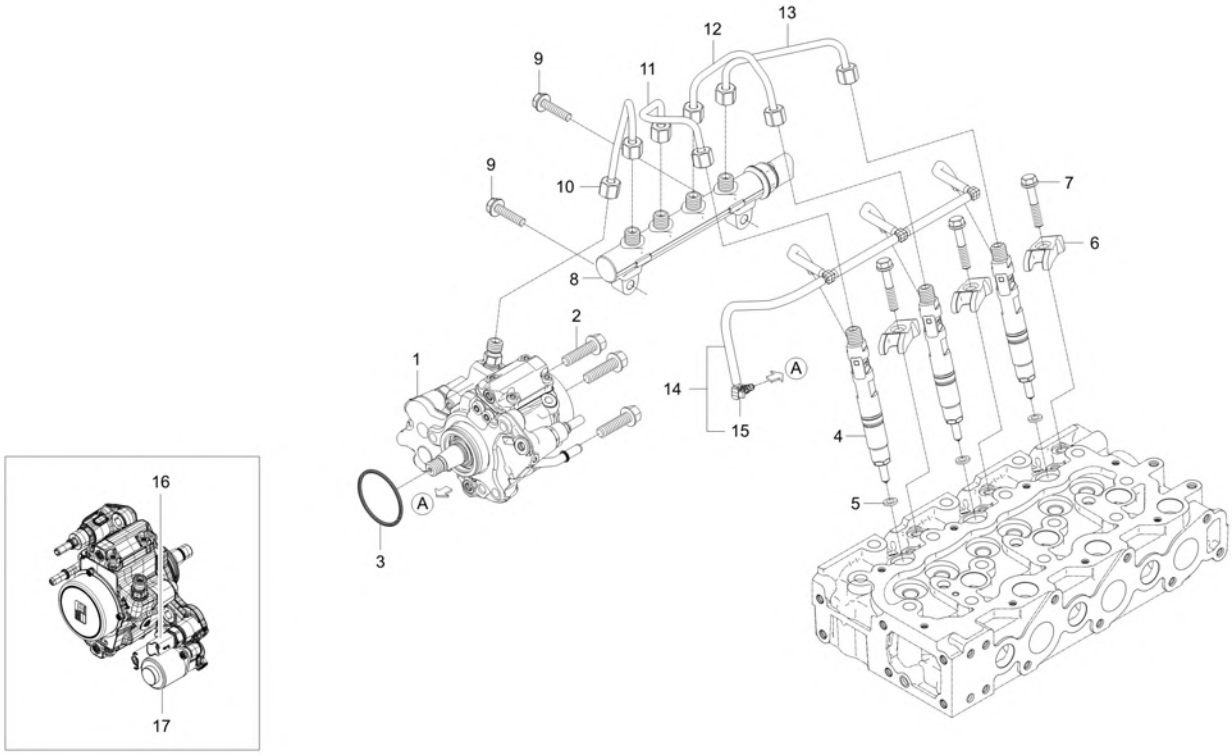

A : DK4510

No.	Part Number	Description	Qty A	Qty B	Qty C	Qty D	Qty E	I.C	Remark
16	F6800-12103002	FUEL TEMPERATURE SENSOR	1						-
17	F6800-12103001	INLET METERING VALVE	1						N

----> Old replace New
<----> Interchangeable
* Please place an order assy(*)
<---- New replace Old
<-O-> Interchangeable with another part(s)
<-X-> Not interchangeable

https://tractormanualz.com/

F5830-G130A

Water flange Group

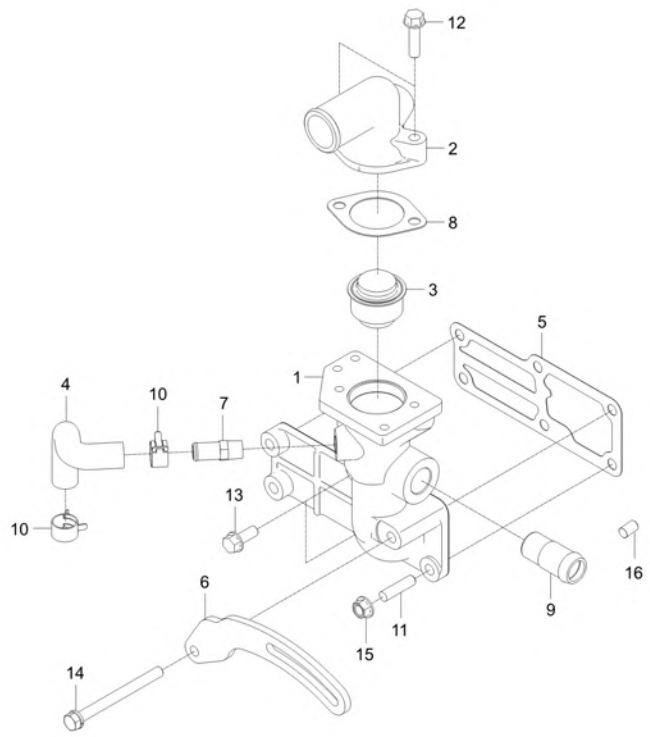

A : DK4510

No.	Part Number	Description	Qty A	Qty B	Qty C	Qty D	Qty E	I.C	Remark
1	F5830-72914	PLANGE, WATER dnr v	1						N
2	E6308-73261	COVER, THERMOSTAT	1						
3	E5500-73012	THERMOSTAT	1						
3	E5500-73013	THERMOSTAT ASSEMBLY	1					<--X-->	
4	E6850-73342	HOSE, WATER PUMP v	1						
5	F6800-72921	GASKET COOLING WATER FLANGE	1						
6	F5800-64422	SUPPORT, ALTERNATOR	1						
6	F6800-64421	SUPPORT, ALTERNATOR dnr v	1					<--O-->	
7	E5500-73342	HOSE, WATER RETURN v	1						
7	E5500-73343	PIPE, WATER RETURN	1					<------	
8	E5500-73272	GASKET v	1						t1.0
9	F6800-13311	CONNECTOR, COOLANT	1						DIA22.3
10	09318-88180	CLAMP, HOSE	2						
11	01513-50822	STUD	1						M8*1.25
12	01754-50830	BOLT FLANGE	2						M8*P1.25
13	01754-50820	BOLT, FLANGE	2						M8XP1.25
14	01123-50890	BOLT, WASHER	1						
14	01123-50865	BOLT, WASHER	1					<--O-->	

----> Old replace New
<---- New replace Old
<-X-> Not interchangeable
<---> Interchangeable
<-O-> Interchangeable with another part(s)
* Please place an order assy(*)

https://tractormanualz.com/

F5830-G130A

Water flange Group

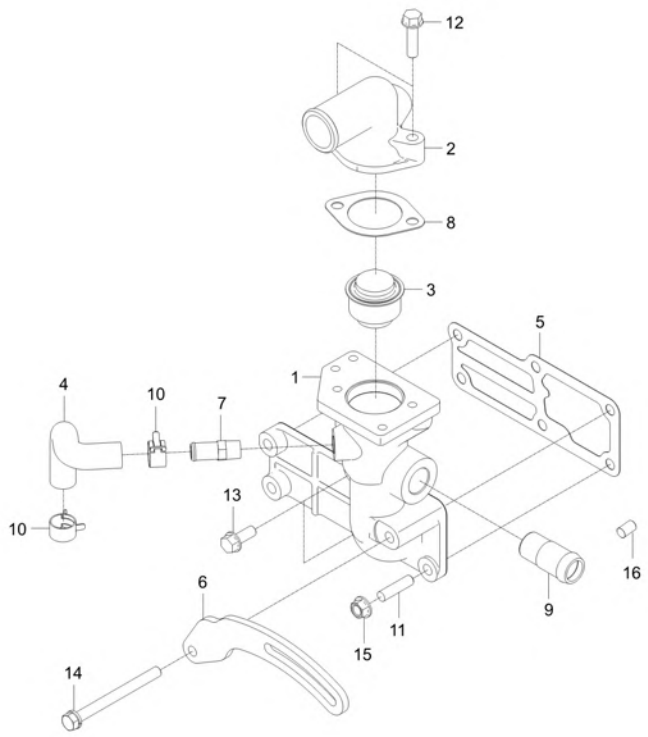

A : DK4510

No.	Part Number	Description	Qty A	Qty B	Qty C	Qty D	Qty E	I.C	Remark
14	01123-50870	WASHER BOLT	1					<----->	
15	02763-50080	FLANGE NUT	1						M8XP1.25
16	F6860-96041	PLUG	1						PT1/2
16	F6860-96042	PLUG	1					<----->	PT1/2

----> Old replace New
<---- New replace Old
<-X-> Not interchangeable
<---> Interchangeable
<-O-> Interchangeable with another part(s)
* Please place an order assy(*)

https://tractormanualz.com/

F6800-G140A

WATER PUMP GROUP

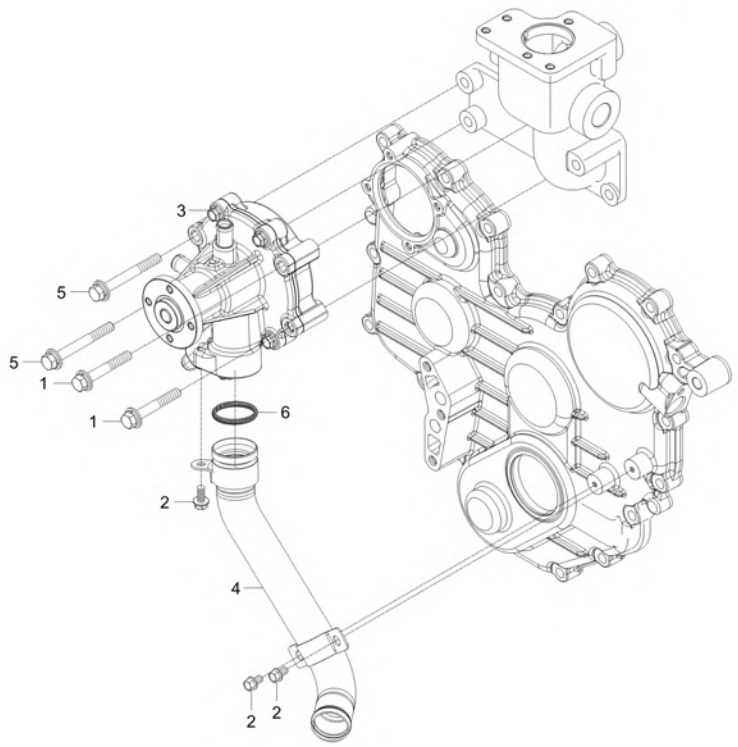

A : DK4510

No.	Part Number	Description	Qty A	Qty B	Qty C	Qty D	Qty E	I.C	Remark
1	01125-50850	BOLT, WASHER	2						M8*P1.25
2	01754-50610	BOLT, FLANGE	3						M6XP1.0
3	F6800-73031	ASSY PUMP,WATER sp v	1						
4	F6800-73051	WATER PUMP PIPE ASSY	1						
5	01125-50870	BOLT, WASHER	2						
6	04811-00320	O RING v	1						(P32)

----> Old replace New
<----> Interchangeable
* Please place an order assy(*)
<---- New replace Old
<-O-> Interchangeable with another part(s)
<-X-> Not interchangeable

https://tractormanualz.com/

F5830-G150A

CYLINDER HEAD COVER GROUP

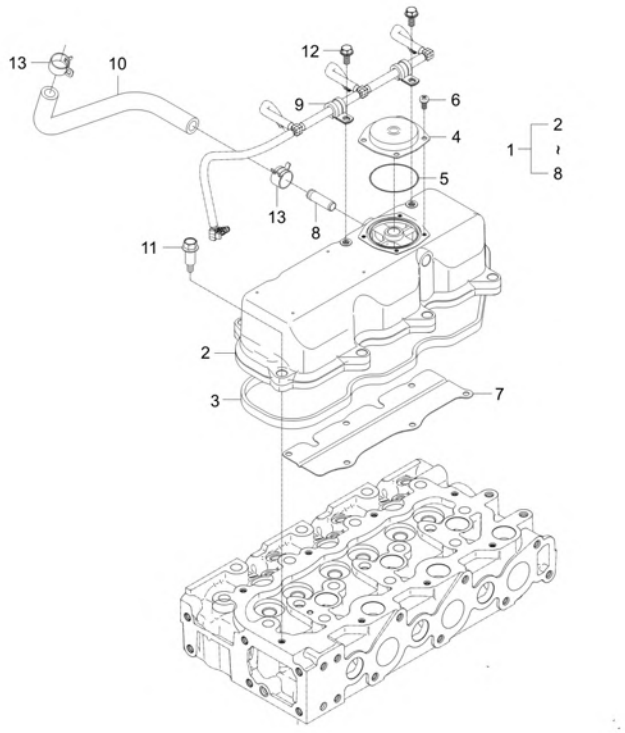

A : DK4510

No.	Part Number	Description	Qty A	Qty B	Qty C	Qty D	Qty E	I.C	Remark
1	F5850-14501	CYLINDER HEAD COVER ASSEMBLY v	1						
2	F5850-14511	COVER,CYLINDER HEAD v	1						
3	F5800-14521	GASKET, CYLINDER HEAD COVER	1						
4	E6510-14532	COVER, VALVE	1						N
5	E6510-14671	O RING	1						N
6	03024-50510	SCREW, WASHER	4						M5*P0.8
7	F5800-14561	PROTECT PLATE OF OIL	1						
8	E6510-05552	CONNECTOR, AIR BREATHER HOSE	1						N
9	F6800-15121	CLAMP, HOSE	2						
9	F6800-15122	CLAMP, HOSE	2					<----->	
10	F5830-05511	HOSE, BLOW BY	1						N
11	E6510-33661	BOLT, CYLINDER HEAD COVER v	8						
12	01754-50612	BOLT, FLANGE	2						M6*1.0
13	09318-88180	CLAMP, HOSE	2						

----> Old replace New
<---- New replace Old
<-X-> Not interchangeable
<---> Interchangeable
<-O-> Interchangeable with another part(s)
* Please place an order assy(*)

https://tractormanualz.com/

F5830-G160B

Fuel Filter & Pipe Group

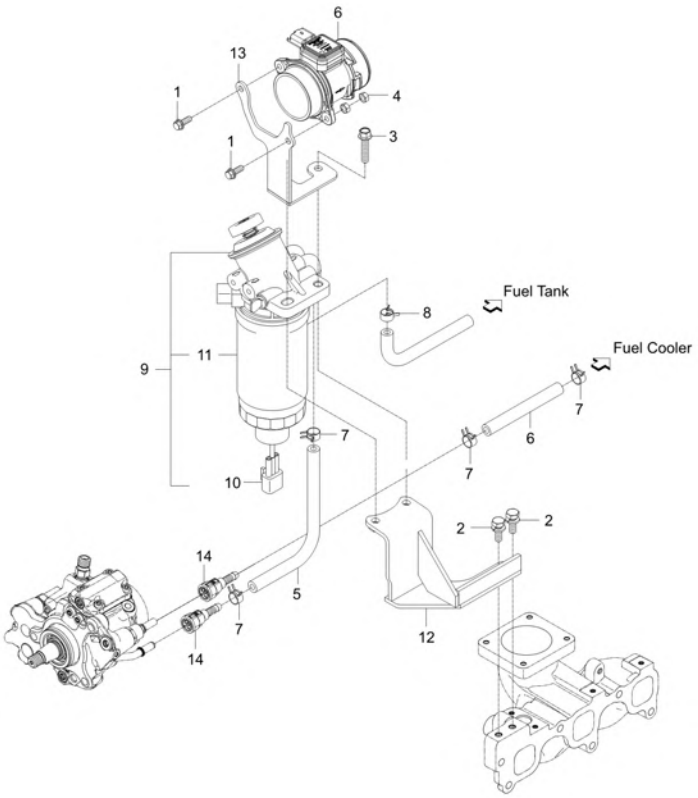

A : DK4510

No.	Part Number	Description	Qty A	Qty B	Qty C	Qty D	Qty E	I.C	Remark
1	01053-50625	BOLT	2						M6*P1.0
2	01123-50816	Hex Head Cap Screw	2						M8XP1.25
3	01125-50830	BOLT, WASHER	2						M8*P1.25
4	02012-50060	NUT	4						
5	09661-80300	HOSE	1						-
6	09661-80450	HOSE	1						
7	14911-4275-1	CLIP, TUBE	3						T0.8*#12
8	15301-7247-0	CLIP, HOSE	1						스탠16#
9	F5805-16402	FILTER, FUEL ASSY v	1						
10	F6800-16121	SENSOR, FUEL WATER	1						
11	F6800-16411	FILTER, FUEL v	1						
12	F5830-16121	SUPPORT	1						
13	F5830-16141	BRACKET, FUEL-FILTER	1						N
14	F6800-16131	QUICK CONNECTOR	3						-

----> Old replace New
<---- New replace Old
<-X-> Not interchangeable
<---> Interchangeable
<-O-> Interchangeable with another part(s)
* Please place an order assy(*)

https://tractormanualz.com/

F5830-G170A

INLET MANIFOLD GROUP

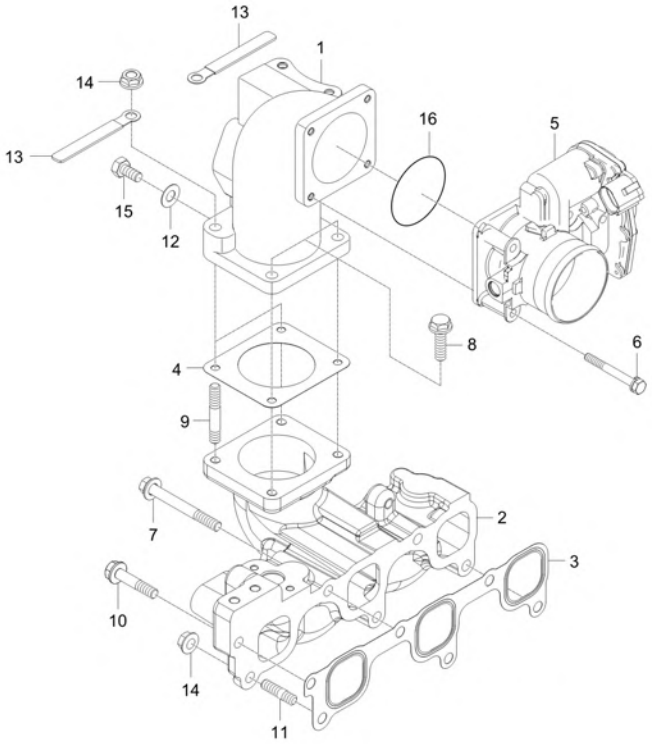

A : DK4510

No.	Part Number	Description	Qty A	Qty B	Qty C	Qty D	Qty E	I.C	Remark
1	F5830-17201	FLANGE, INTAKE MANIFOLD	1						
1	F5830-17202	FLANGE,INTAKEMANIFOLD	1					<--O-->	N
2	F5800-11762	MANIFOLD, INTAKE	1						N
2	F5800-11763	MANIFOLD, INTAKE	1					<----->	-
3	F5800-11821	GASKET, INTAKE MANIFOLD	1						
4	F6800-17211	GASKET, INTAKE MANIFOLD FLANGE	1						
5	F6800-17701	AIR CONTROL VALVE ASSY	1						
6	01023-50645	BOLT, WASHER v	4						
7	01125-50870	BOLT, WASHER	2						
8	01754-50822	BOLT, FLANGE	2						
9	01513-50835	STUD	2						
10	01754-50830	BOLT FLANGE	3						M8*P1.25
11	01513-50822	STUD	1						M8*1.25
12	04011-50100	PLAIN WASHER	2						M10
13	32240-3446-1	WIR'G CLAMP	2						
14	02763-50080	FLANGE NUT	3						M8XP1.25
15	01170-51016	OB-BOLT	2						
16	EH13-0002A	O RING-ACV v	1						

----> Old replace New
<---- New replace Old
<-X-> Not interchangeable
<---> Interchangeable
<-O-> Interchangeable with another part(s)
* Please place an order assy(*)

https://tractormanualz.com/

F5830-G175A

EGR GROUP

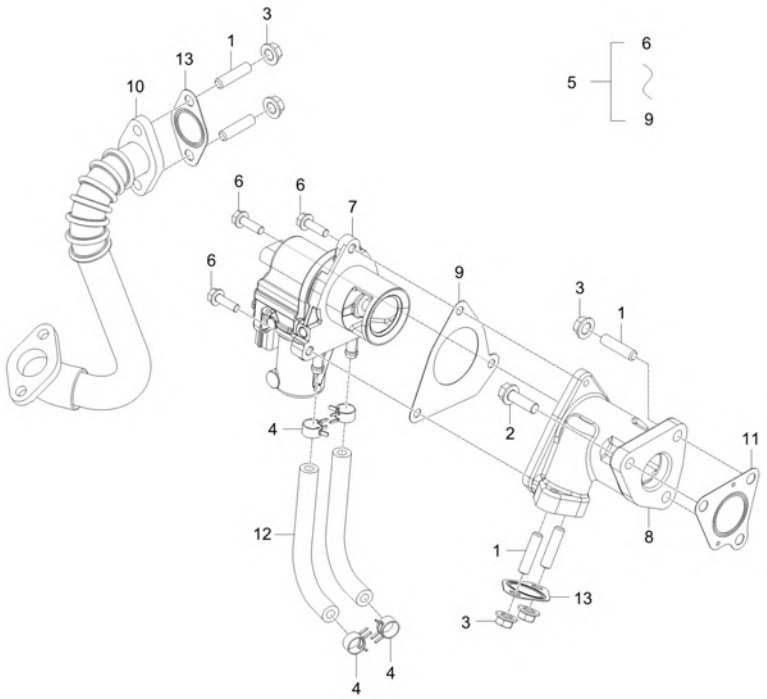

A : DK4510

No.	Part Number	Description	Qty A	Qty B	Qty C	Qty D	Qty E	I.C	Remark
1	01513-50822	STUD	5						M8*1.25
2	01754-50825	BOLT, FLANGE	2						M8XP1.25
3	02763-50080	FLANGE NUT	5						M8XP1.25
4	09318-88130	CLAMP, HOSE	4						
5	F5800-17501	EGR VALVE AND HOUSING ASSY	1						
5	F5800-17502	EGR VALVE AND HOUSING ASSY	1					<------	
5	F5800-17503	EGR VALVE AND HOUSING ASSY	1					<----->	
6	01754-50620	BOLT, FLANGE	3						
7	F5800-17511	EGR VALVE ASSY dnr v	1						
7	F5800-17512	EGR VALVE ASSY	1					<------	
8	F5800-17521	EGR HOUSING HOUSING	1						N
8	F5800-17522	EGR HOUSING HOUSING	1					<----->	-
9	F5800-17531	GASKET	1						
10	F5830-17801	EGR PIPE ASSY	1						N
11	F6800-17551	GASKET, EGR HOUSING	1						
12	F5830-17561	COOLING HOSE	2						
12	F5830-17562	COOLING HOSE	2					<--O-->	
13	F6800-20301	GASKET, EGR	2						

----> Old replace New
<---- New replace Old
<-X-> Not interchangeable
<---> Interchangeable
<-O-> Interchangeable with another part(s)
* Please place an order assy(*)

https://tractormanualz.com/

F5830-G180A

Intake Pipe Group

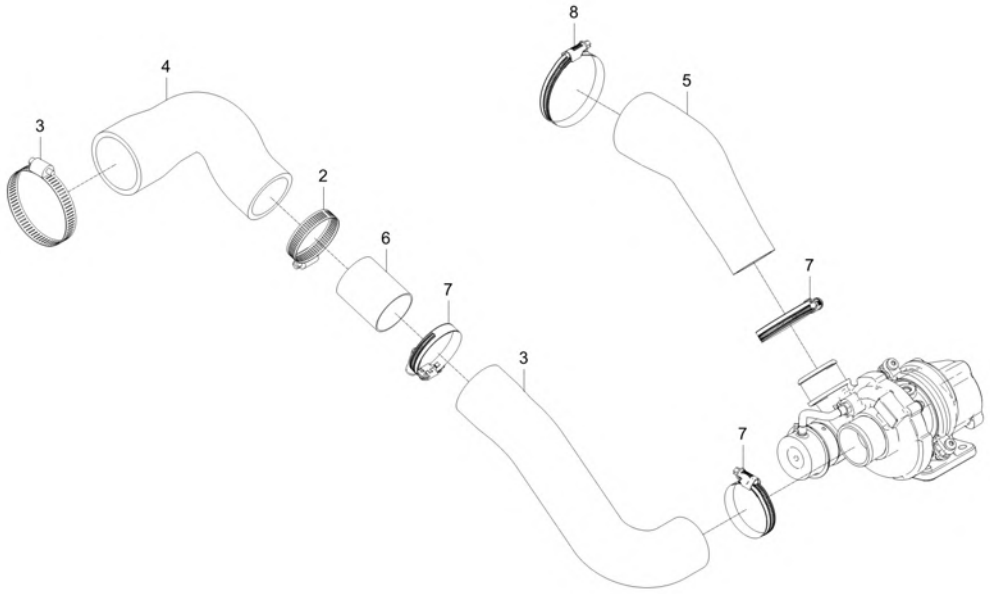

A : DK4510

No.	Part Number	Description	Qty A	Qty B	Qty C	Qty D	Qty E	I.C	Remark
1	E7300-11791	CLAMP, HOSE	1						DIA85스탠 85#
2	E7300-72891	CLAMP, HOSE	1						DIA60스탠 60#
3	F5810-18943	INLET HOSE, 1	1						N
4	F5830-18951	HOSE 2, INTAKE	1						
5	F6800-11651	HOSE, INLET	1						
6	F6800-18961	BLOWBY CONNECTOR	1						
7	F6800-91811	HOSE CLAMP	3						40-60mm
7	F6800-91812	HOSE CLAMP	3					<----->	
8	F6800-91821	HOSE CLAMP	1						60-80mm
8	F6800-91822	HOSE CLAMP	1					<----->	

----> Old replace New
<---- New replace Old
<-X-> Not interchangeable
<---> Interchangeable
<-O-> Interchangeable with another part(s)
* Please place an order assy(*)

https://tractormanualz.com/

F5800-G190A

EXHAUST MANIFOLD GROUP

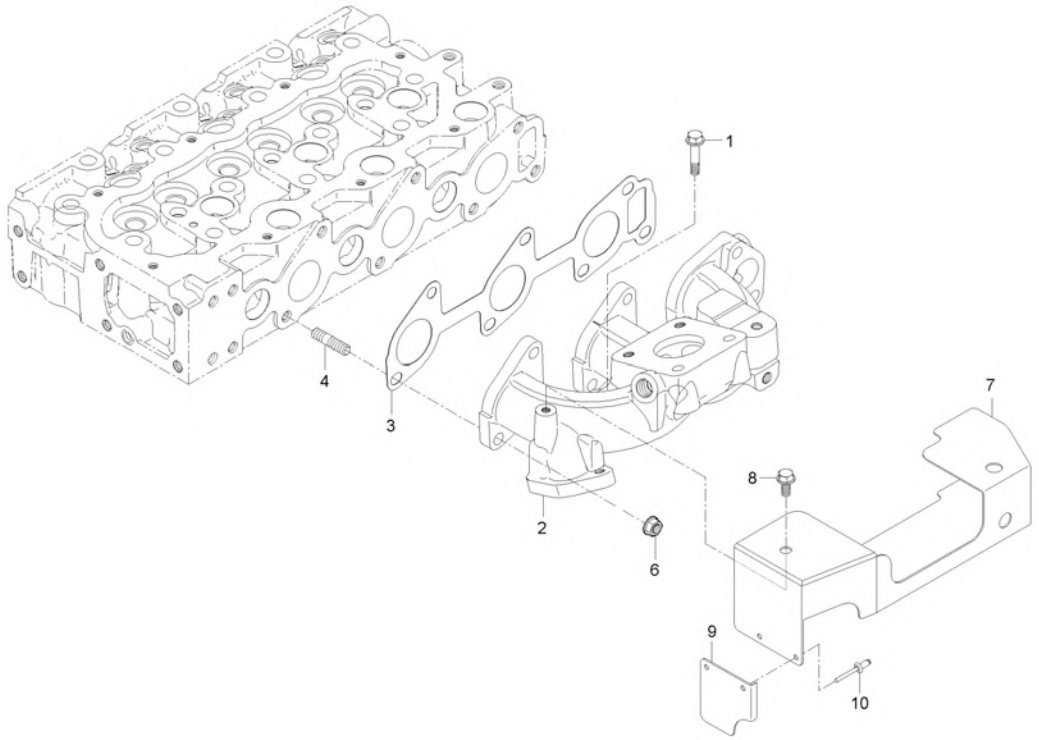

A : DK4510

No.	Part Number	Description	Qty A	Qty B	Qty C	Qty D	Qty E	I.C	Remark
1	01754-50640	FLANGE BOLT	1						
2	F5800-12313	MANIFOLD,EXHAUST	1						
3	F5800-12351	GASKET, EXHAUST MANIFOLD	1						
4	F6800-92451	BOLT, STUD	5						M8*P1.25
4	F6800-92452	BOLT, STUD	5					<------	M8*P1.25
6	F6800-91911	U-NUT	5						-
7	F5800-13764	PLATE,HEAT	1						t1.2
8	01754-50610	BOLT, FLANGE	1						M6XP1.0
9	F5800-13771	PLATE obs v	1						t1.2
9	F5800-13772	PLATE	1					<--O-->	t1.2
9	F5800-13773	PLATE	1					<----->	t1.2
10	F6800-94111	RIVET	2						

----> Old replace New
<---- New replace Old
<-X-> Not interchangeable
<---> Interchangeable
<-O-> Interchangeable with another part(s)
* Please place an order assy(*)

https://tractormanualz.com/

F5800-G200A

EGR Cooler Group

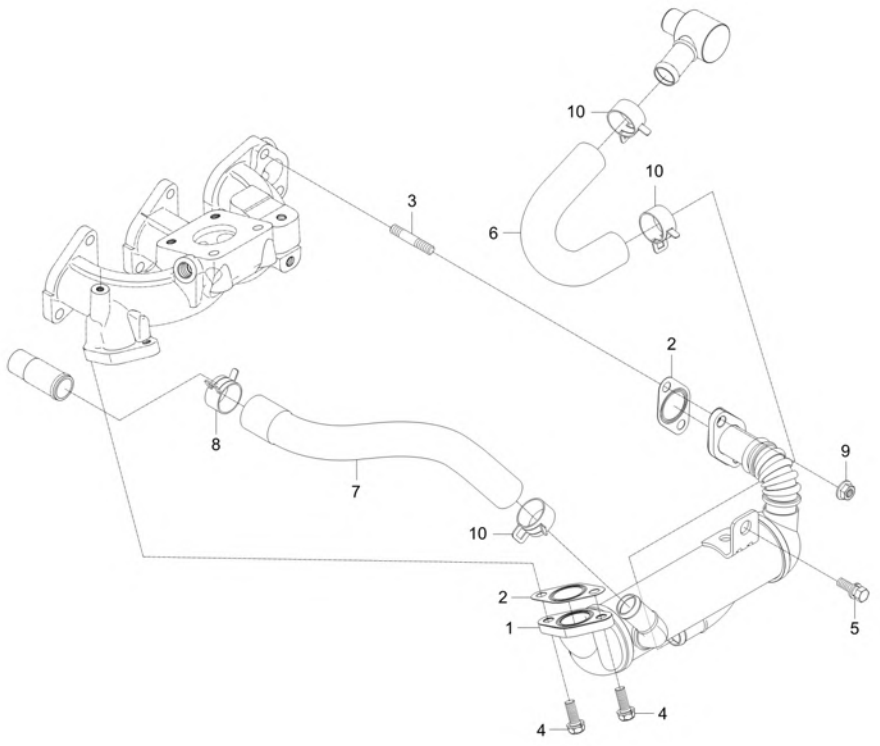

A : DK4510

No.	Part Number	Description	Qty A	Qty B	Qty C	Qty D	Qty E	I.C	Remark
1	F5800-20101	EGR COOLER ASSY	1						
2	F6800-20301	GASKET, EGR	2						
3	01513-50835	STUD	2						
4	01123-50822	WASHER BOLT	2						M8XP1.25
5	01123-50816	Hex Head Cap Screw	1						M8XP1.25
6	F6800-20401	HOSE 1, EGR COOLER	1						
7	F6800-20501	HOSE 2, EGR COOLER	1						
8	09318-88260	HOSE CLAMP	1						
9	F6800-91911	U-NUT	2						-
10	09318-88250	CLAMP	3						

----> Old replace New <---- New replace Old <-X-> Not interchangeable
<---> Interchangeable <-O-> Interchangeable with another part(s)
* Please place an order assy(*)

https://tractormanualz.com/

F5831-G210A

Flywheel_housing Group

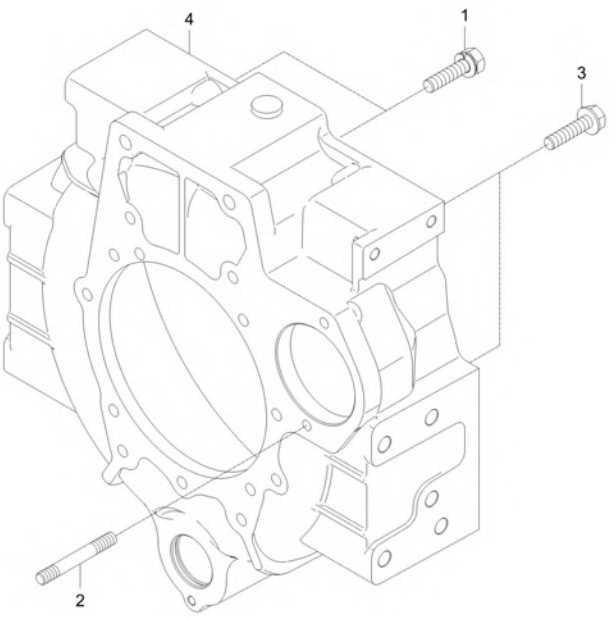

A : DK4510

No.	Part Number	Description	Qty A	Qty B	Qty C	Qty D	Qty E	I.C	Remark
1	01133-51240	BOLT, WASHER	2						M12XP1.25
2	01517-51028	STUD	1						M10XP1.25
3	01674-51032	FLANGE BOLT	11						
3	EF11-0001A	BOLT,FLANGEWITHPIN	11					<------	HRC20-28
4	F5831-04611	HOUSING,FLYWHEEL	1						
4	F5831-04612	HOUSING, FLYWHEEL	1					<------	

----> Old replace New
<---- New replace Old
<-X-> Not interchangeable
<---> Interchangeable
<-O-> Interchangeable with another part(s)
* Please place an order assy(*)

https://tractormanualz.com/

F5810-G220A

FLYWHEEL GROUP

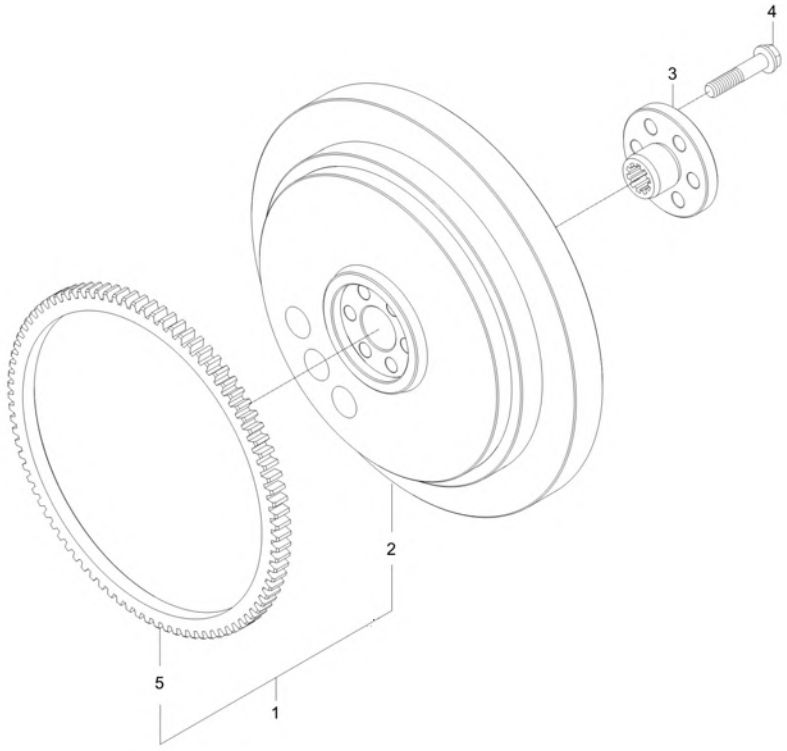

A : DK4510

No.	Part Number	Description	Qty A	Qty B	Qty C	Qty D	Qty E	I.C	Remark
1	F5810-25013	ASS'Y FLYWHEEL	1						N
1	F5810-25014	ASSY FLYWHEEL	1					<----->	-
2	F5810-25113	FLYWHEEL	1						N
2	F5810-25114	FLYWHEEL	1					<----->	-
3	E5800-25182	HUB, SPLINE	1						
4	E5800-25161	BOLT, FLYWHEEL	6						
5	E7103-63821	GEAR RING (use 15221-63824) dnr v	1						

----> Old replace New
<---> Interchangeable
* Please place an order assy(*)
<---- New replace Old
<-O-> Interchangeable with another part(s)
<-X-> Not interchangeable

https://tractormanualz.com/

F5830-G230A

COOLING FAN GROUP

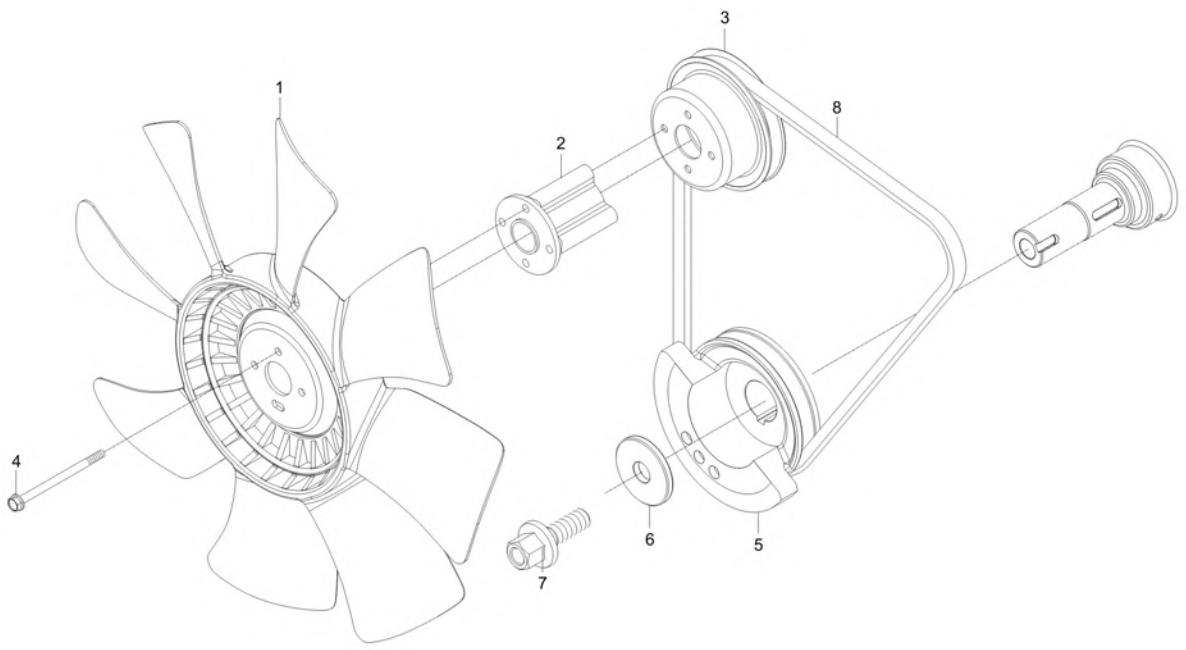

A : DK4510

No.	Part Number	Description	Qty A	Qty B	Qty C	Qty D	Qty E	I.C	Remark
1	E6520-74111	FAN, COOLING v	1						
2	E5850-74151	COLLAR,FAN	1						
3	E5616-74252ED	PULLEY, FAN	1						
4	01023-50680	BOLT v	4						
5	F5830-74282	PULLEY,CRANK SHAFT	1						N
6	F6800-23501	CRANKSHAFT WASHER	1						-
7	F6800-92311	BOLT, CRANKSHAFT	1						-
8	F6800-72531	BELT,FAN	1 ~ RR7600028						REC A. 43
8	F6820-72531	FAN BELT	1 RR7600029 ~ WR7600104					<----->	REC A. 43
8	EH16-0003A	BELT, FAN	1					<------	REC GREEN -1 LA43

----> Old replace New
<---- New replace Old
<-X-> Not interchangeable
<---> Interchangeable
<-O-> Interchangeable with another part(s)
* Please place an order assy(*)

https://tractormanualz.com/

F5800-G240A

Turbo Charger Group

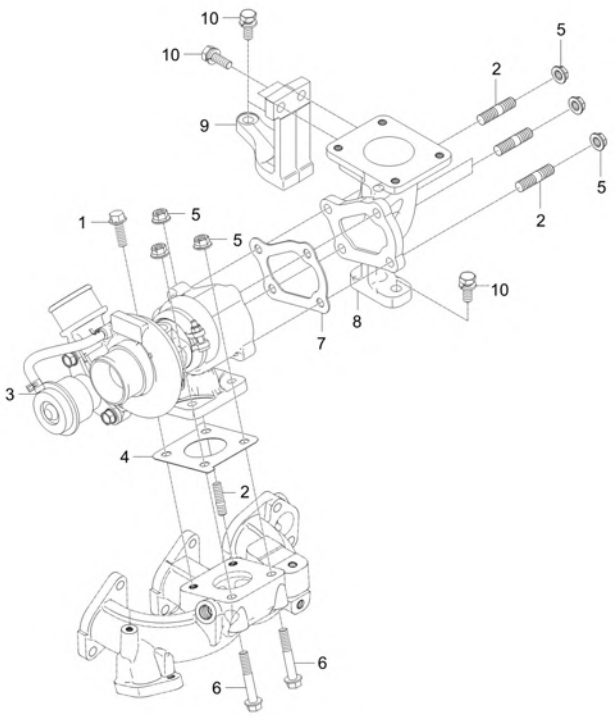

A : DK4510

No.	Part Number	Description	Qty A	Qty B	Qty C	Qty D	Qty E	I.C	Remark
1	F6800-92411	FLANGEBOLT	3						M8x1.25 25mm
1	F6800-92411	FLANGEBOLT	1					<----->	M8x1.25 25mm
2	F6800-92441	BOLT, STUD	3						
2	F6800-92441	BOLT, STUD	5					<----->	
3	F5800-17011	TURBOCHARGER ASSY dnr v	1						
3	F5800-17012	TURBOCHARGER ASSY v	1					<----->	-
4	F6800-17101	GASKET 1, TURBOCHARGER	1						
5	F6800-91911	U-NUT	5						-
5	F6800-91911	U-NUT	7					<----->	-
6	F6800-92421	FLANGEBOLT	2						M8x1.25 65mm
7	F6800-17111	GASKET 2, TURBOCHARGER	1						t1.5
8	F6800-11951	FLANGE, TURBOCHARGER	1						
9	F6800-25501	SUPPORT, TURBOCHARGER FLANGE	1						
10	01123-50822	WASHER BOLT	5						M8XP1.25

----> Old replace New <---- New replace Old <-X-> Not interchangeable
<---> Interchangeable <-O-> Interchangeable with another part(s)
* Please place an order assy(*)

https://tractormanualz.com/

F5800-G245A

TURBO PIPE GROUP

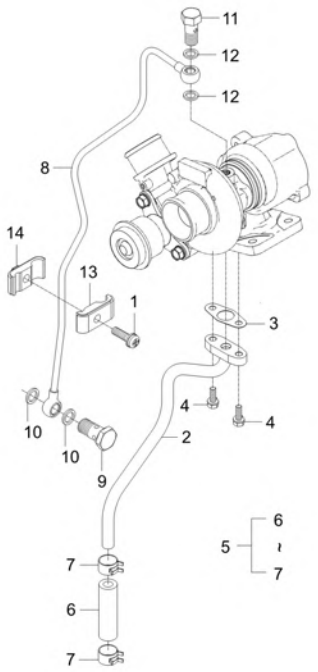

A : DK4510

No.	Part Number	Description	Qty A	Qty B	Qty C	Qty D	Qty E	I.C	Remark
1	01202-50625	BOLT WASHER	1						
2	F5800-33051	OIL DRAIN PIPE ASSY	1						
3	F6800-33671	GASKET	1						
4	01023-50618	BOLT w- WASHER	2						
5	E6500-33201	HOSE, OIL ASS`Y	1						
6	E6500-33242	OIL HOSE v	1						
7	E6500-33251	CLIP v	2						
8	F5800-33041	OIL FEEDING PIPE ASSY	1						
9	E5629-24401	EYE BOLT	1						
10	04724-00120	PACKING	2						T2.0
11	E6500-95802	CONNECTOR 2	1						
11	E6500-95803	CONNECTOR 2	1					<------	
12	E6301-33661	GASKET	2						
13	E6520-34011	CLAMP 1, HOSE	1						
14	E6520-34021	CLAMP 2, HOSE	1						

----> Old replace New
<----> Interchangeable
* Please place an order assy(*)
<---- New replace Old
<-O-> Interchangeable with another part(s)
<-X-> Not interchangeable

https://tractormanualz.com/

F5830-G250A

Aftertreatment Group

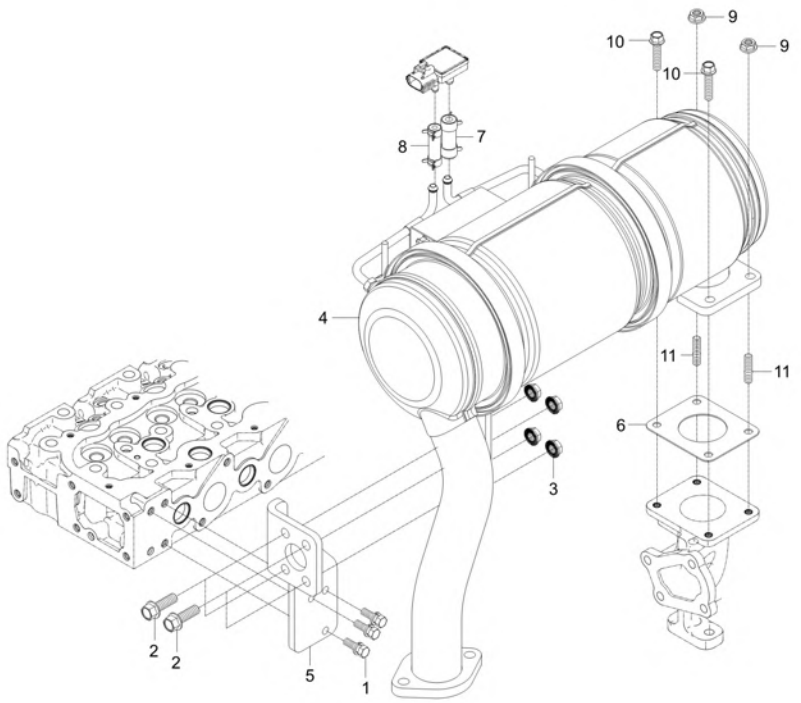

A : DK4510

No.	Part Number	Description	Qty A	Qty B	Qty C	Qty D	Qty E	I.C	Remark
1	01123-50822	WASHER BOLT	3						M8XP1.25
2	01133-51032	BOLT	4						M10*P1.25
3	02783-50100	FLANGE NUT	4						M10XP1.25
4	F5830-25101	CCRT ASSY	1						N
5	F5830-25422	BRACKET	1 ~ RR7600054						N
5	F5830-25423	BRACKET	1 RR7600055 ~ WR7600104					<----->	T=8.0
6	F6800-12371	GASKET, TURBOCHARGER FLANGE	1						
7	F6800-26661	TUBE, 1	1						
8	F6800-26671	TUBE, 2	1						
9	F6800-91911	U-NUT	2						-
10	F6800-92411	FLANGEBOLT	2						M8x1.25 25mm
11	F6800-92441	BOLT, STUD	2						

----> Old replace New
<---- New replace Old
<-X-> Not interchangeable
<---> Interchangeable
<-O-> Interchangeable with another part(s)
* Please place an order assy(*)

https://tractormanualz.com/

F5800-G260A

ECU & Sensors Group

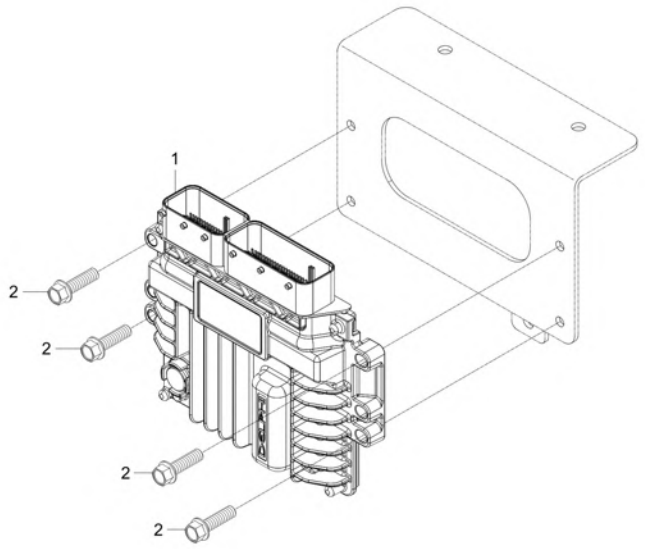

A : DK4510

No.	Part Number	Description	Qty A	Qty B	Qty C	Qty D	Qty E	I.C	Remark
1	F6800-26102	333...ENG ECU T4 -Need Program v	1 ~ VR7600064						
1	EH39-0001A	050 - CONTROLLER, ENGINE dnr v	1 VR7600065 ~ WR7600104					<----->	
2	01754-50625	BOLT, FLANGE	6						7T

----> Old replace New
<---> Interchangeable
* Please place an order assy(*)
<---- New replace Old
<-O-> Interchangeable with another part(s)
<-X-> Not interchangeable

https://tractormanualz.com/

F5800-G270A

Electric part Group

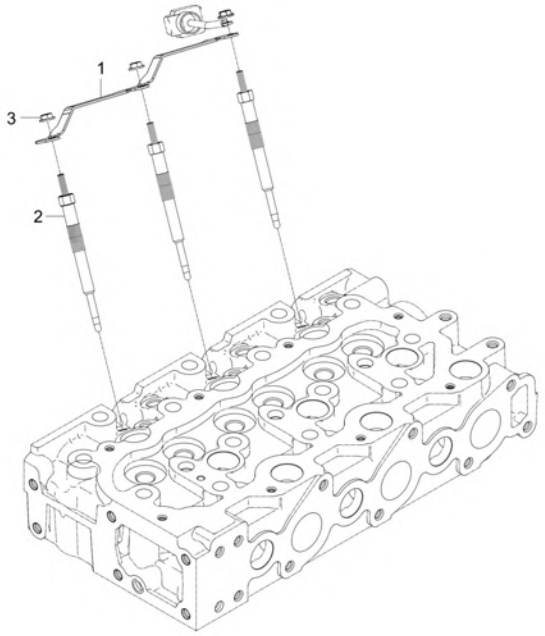

A : DK4510

No.	Part Number	Description	Qty A	Qty B	Qty C	Qty D	Qty E	I.C	Remark
1	F5800-65561	CORD,GLOW PLUG	1						
2	E6700-65511	GLOW PLUG	3						
2	F6800-65511	PLUG,GLOW	3					<------	N
3	02761-50040	NUT, FLANGE	3						

----> Old replace New
<---- New replace Old
<-X-> Not interchangeable
<---> Interchangeable
<-O-> Interchangeable with another part(s)
* Please place an order assy(*)

https://tractormanualz.com/

F5805-G310A

EPA EEC LABEL GROUP

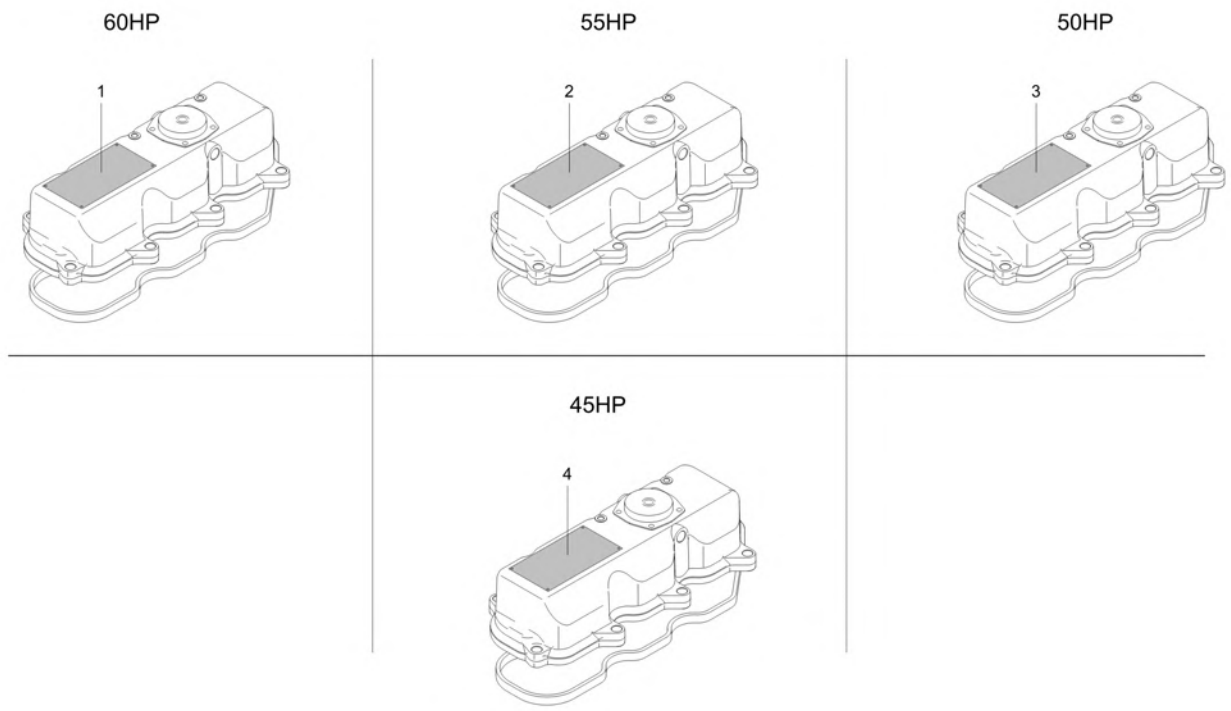

A : DK4510

No.	Part Number	Description	Qty A	Qty B	Qty C	Qty D	Qty E	I.C	Remark
1	F5800-43182	LABEL	1						
1	F5800-43183	LABEL	1					<------	
1	F5800-43184	LABEL	1					<----->	
1	F5800-43185	LABEL dnr v	1					<------	
1	F5800-43186	LABEL dnr v	1					<------	
1	F5800-43187	LABEL v	1					<------	
2	F5800-41202	LABEL	1						
2	F5800-41203	LABEL	1					<------	
2	F5800-41204	LABEL	1					<----->	
2	F5800-41205	LABEL	1					<------	
2	F5800-41206	LABEL	1					<------	
2	F5800-41207	LABEL	1					<------	
3	F5800-38202	LABEL	1						
3	F5800-38203	LABEL	1					<------	
3	F5800-38204	LABEL	1					<----->	
3	F5800-38205	LABEL dnr v	1					<------	
3	F5800-38206	LABEL dnr v	1					<------	
3	F5800-38207	LABEL v	1					<------	

----> Old replace New
<---- New replace Old
<-X-> Not interchangeable
<---> Interchangeable
<-O-> Interchangeable with another part(s)
* Please place an order assy(*)

https://tractormanualz.com/

F5805-G310A

EPA EEC LABEL GROUP

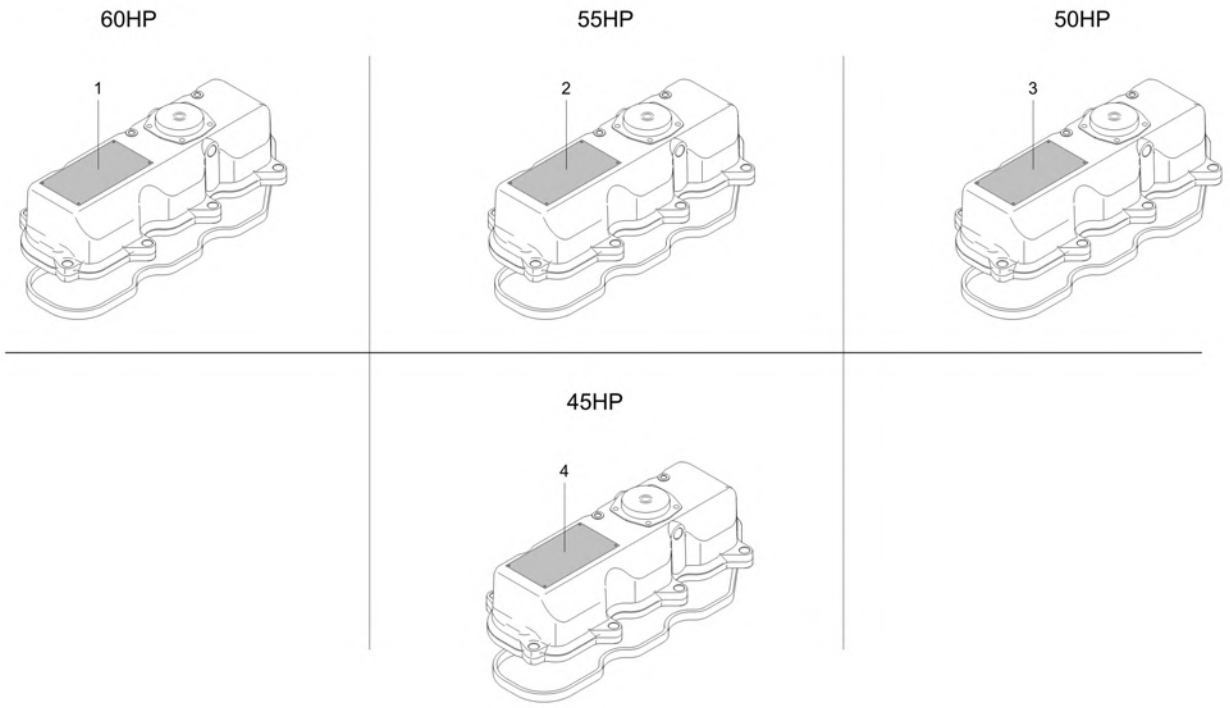

A : DK4510

No.	Part Number	Description	Qty A	Qty B	Qty C	Qty D	Qty E	I.C	Remark
4	F5800-34202	LABEL	1 PR7600001 ~ PR7600258						
4	F5800-34203	LABEL	1 RR7600001 ~ RR7600068					<------	
4	F5800-34204	LABEL	1 SR7600001 ~ SR7600226					<----->	
4	F5800-34205	EPA LABEL 2017	1 TR7600001 ~ TR7600198					<------	
4	F5800-34206	EPA LABEL 2018 dnr v	1 UR7600001 ~ UR7600242					<------	
5	F5800-34207	LABEL v	1 VR7600001 ~ VR7600176					<------	

----> Old replace New
<---> Interchangeable
* Please place an order assy(*)
<---- New replace Old
<-O-> Interchangeable with another part(s)
<-X-> Not interchangeable

https://tractormanualz.com/

F6805-G320A

LABEL GROUP

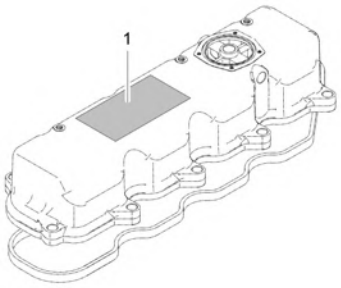

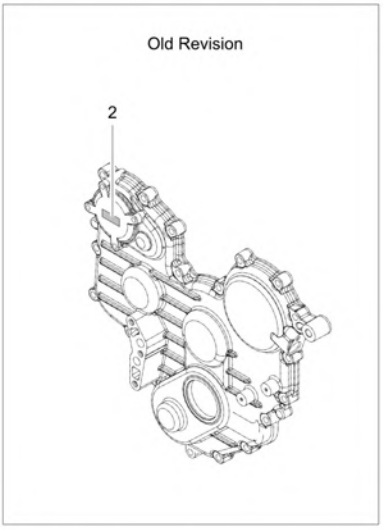

A : DK4510

No.	Part Number	Description	Qty A	Qty B	Qty C	Qty D	Qty E	I.C	Remark
1	F6805-99521	LABEL KIOTI	1						T=0.05-0.08
1	E5608-99522	LABEL KIOTI	1					<------	
2	EF15-0005A	LABEL, FIE SYSTEM	1						

----> Old replace New
<---> Interchangeable
* Please place an order assy(*)
<---- New replace Old
<-O-> Interchangeable with another part(s)
<-X-> Not interchangeable

https://tractormanualz.com/

EF2-G102501

OIL GAUGE GROUP

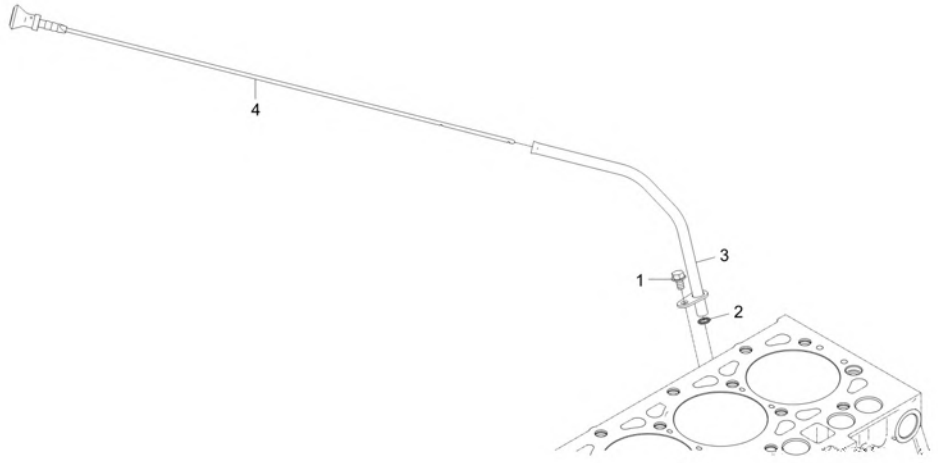

A : DK4510

No.	Part Number	Description	Qty A	Qty B	Qty C	Qty D	Qty E	I.C	Remark
1	01754-50610	BOLT, FLANGE	1						M6XP1.0
2	04811-00100	O RING	1						
3	EF15-0044A	ASSYGUIDE,OILGAUGE	1						
4	F5800-36412	OIL GAUGE	1						-
4	F5800-36413	GAUGE,OIL	1					<----->	-
4	F5800-36414	GAUGE,OIL	1					<----->	-

----> Old replace New
<----> Interchangeable
* Please place an order assy(*)
<---- New replace Old
<-O-> Interchangeable with another part(s)
<-X-> Not interchangeable

https://tractormanualz.com/

EF3-G102502

OIL GAUGE GROUP

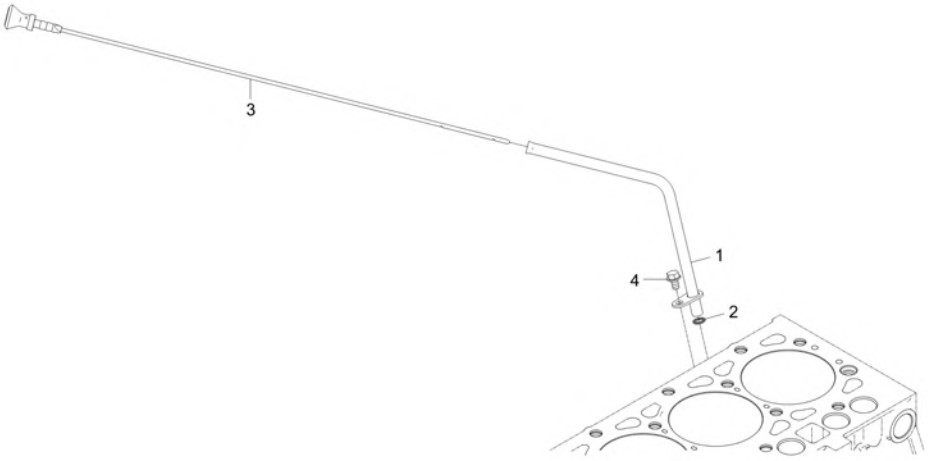

A : DK4510

No.	Part Number	Description	Qty A	Qty B	Qty C	Qty D	Qty E	I.C	Remark
1	EF36-0003A	ASSY GUIDE, OIL GAUGE	1						
2	04811-00100	O RING	1						
3	F5800-36411	GAUGE,OIL dnr v	1						N
3	F5800-36412	OIL GAUGE	1					<----->	-
4	01754-50610	BOLT, FLANGE	1						M6XP1.0

----> Old replace New
<---- New replace Old
<-X-> Not interchangeable
<---> Interchangeable
<-O-> Interchangeable with another part(s)
* Please place an order assy(*)

https://tractormanualz.com/

EF1-G132002

EPA EEC LABEL GROUP

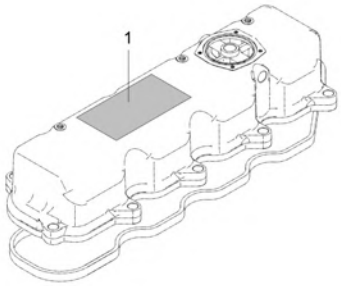

A : DK4510

No.	Part Number	Description	Qty A	Qty B	Qty C	Qty D	Qty E	I.C	Remark
1	EF15-0002A	LABEL, EEC	1						T=0.5
1	EF15-0002B	LABEL, EEC	1					<----->	T=0.5
1	EF15-0002C	LABEL, EEC	1					<------	T=0.5

----> Old replace New
<---- New replace Old
<-X-> Not interchangeable
<---> Interchangeable
<-O-> Interchangeable with another part(s)
* Please place an order assy(*)

https://tractormanualz.com/

EH2-G111001

CYLINDER BLOCK GROUP

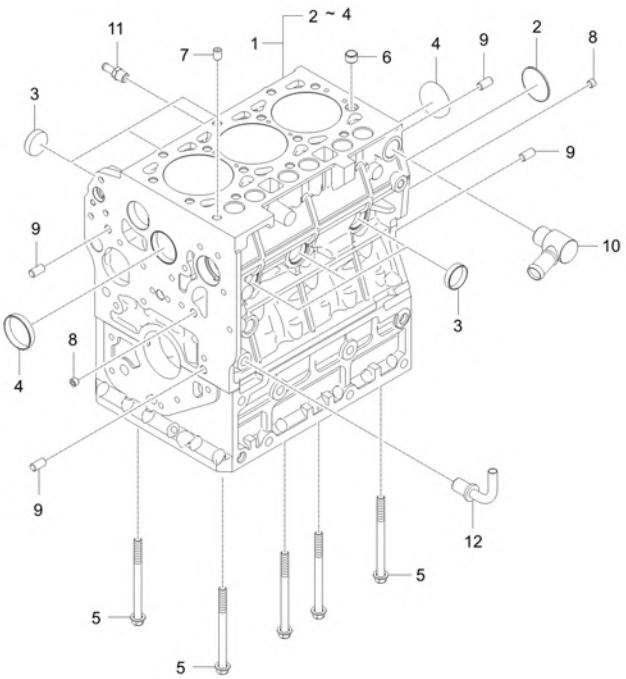

A : DK4510

No.	Part Number	Description	Qty A	Qty B	Qty C	Qty D	Qty E	I.C	Remark
1	EH21-0001A	ASSY BLOCK,CYLINDER	1						
2	06311-75045	PLUG	1						T2*48*48
3	15221-0338-3	CAP, SEALING	6						-
4	15221-0339-2	CAP SEALING	2						-
5	F6800-90121	BOLT, LADDER FRAME	8						-
6	E6301-33812	PIN, PIPE	1						N
7	F6800-33651	PIN	1						-
8	E5900-96022	PLUG	4						-
9	05012-01018	PIN, STRAIGHT	4						
10	F6800-20703	COOLANT CONNECTOR ASSY	1						-
11	F6800-73341	JOINT, HOSE	1						
12	E6500-33062	TUBE 3, OIL	1						-
12	E6500-33063	PIPE, OIL-3	1					<------	-

----> Old replace New
<---- New replace Old
<-X-> Not interchangeable
<---> Interchangeable
<-O-> Interchangeable with another part(s)
* Please place an order assy(*)

https://tractormanualz.com/

EH2-G113001

CYLINDER HEAD GROUP

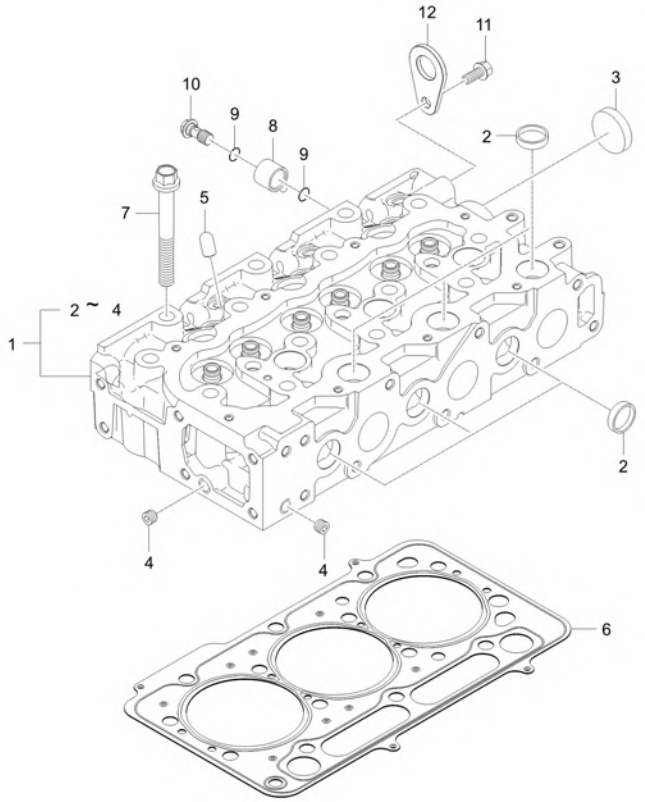

A : DK4510

No.	Part Number	Description	Qty A	Qty B	Qty C	Qty D	Qty E	I.C	Remark
1	F5800-03044	ASSY HEAD,CYLINDER	1						
2	15221-0337-3	CAP SEALING	9						T1.6*40*40
3	15221-0349-3	CAP SEALING	1						T1.6*60*60
4	E5900-96022	PLUG	2						-
5	F6800-03501	HINGE, INJECTOR CLAMP	3						
6	F5800-03311	GASKET,HEAD	1						
7	F6800-03451	BOLT,CYLINDER HEAD	14						
8	F5850-73341	CONNECTOR, COOLANT	1						
9	04814-00160	O RING	2						
10	T4260-62552	JOINT BOLT	1						
11	01754-50816	BOLT, FLANGE	1						M8XP1.25
12	15221-0175-1	ENGINE HOOK	1						T4*40*64

----> Old replace New <---- New replace Old <-X-> Not interchangeable
<---> Interchangeable <-O-> Interchangeable with another part(s)
* Please place an order assy(*)

https://tractormanualz.com/

EH2-G114001

GEAR CASE GROUP

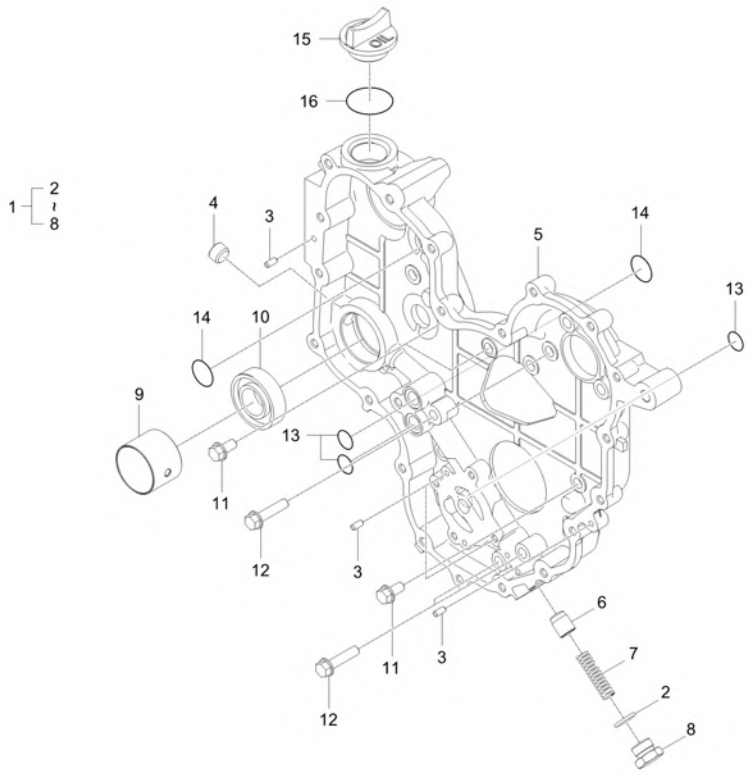

A : DK4510

No.	Part Number	Description	Qty A	Qty B	Qty C	Qty D	Qty E	I.C	Remark
1	EH23-0003B	ASSY GEAR CASE	1						
1	EH23-0003C	ASSY GEAR CASE	1					<----->	
2	04811-00160	O RING	1						DIA15.8
3	05012-00510	PIN,STRAIGHT	4						
4	E5800-96032	PLUG	1						PT3/8
5	F5800-04114	GEAR CASE v	1						-
5	F5800-04115	GEAR CASE	1					<----->	-
5	F5800-04116	GEAR CASE	1					<----->	-
6	F6720-04711	PLUNGER, RELIEF VALVE v	1						N
6	F6720-04712	PLUNGER, RELIEF VALVE	1					<----->	-
7	F6720-04721	SPRING, RELIEF VALVE	1						DIA1.8
8	EF44-0023A	PLUG, RELIEF VALVE	1						-
9	F6800-04501	BUSH, PTO SHAFT	1						
10	08101-06205	BEARING BALL dnr v	1						DIA25
11	01754-50816	BOLT, FLANGE	10						M8XP1.25
12	01754-50835	BOLT v	3						
13	04816-00150	O_RING	3						DIA14.8
14	04816-00220	O_RING dnr v	2						DIA21.8

----> Old replace New
<---> Interchangeable
* Please place an order assy(*)
<---- New replace Old
<-O-> Interchangeable with another part(s)
<-X-> Not interchangeable

https://tractormanualz.com/

EH2-G114001

GEAR CASE GROUP

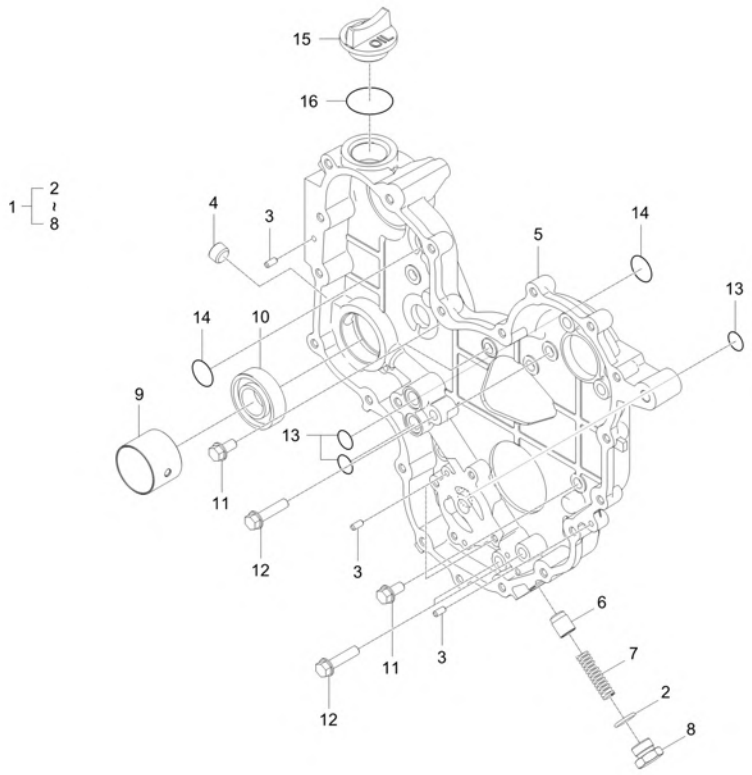

A : DK4510

No.	Part Number	Description	Qty A	Qty B	Qty C	Qty D	Qty E	I.C	Remark
15	E5500-33142	PLUG, OIL FILLER	1						
16	04811-50300	O RING v	1						G30

----> Old replace New
<----> Interchangeable
* Please place an order assy(*)
<---- New replace Old
<-O-> Interchangeable with another part(s)
<-X-> Not interchangeable

https://tractormanualz.com/

EH2-G115001

GEAR CASE COVER GROUP

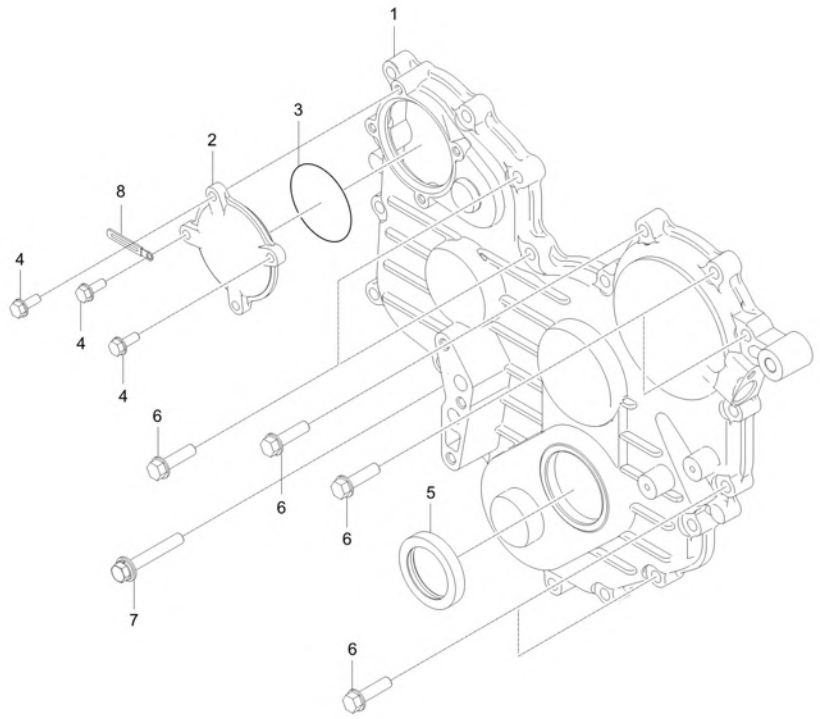

A : DK4510

No.	Part Number	Description	Qty A	Qty B	Qty C	Qty D	Qty E	I.C	Remark
1	F6800-04215	COVER, GEAR CASE v	1						-
2	F6800-04251	COVER, HP PUMP GEAR	1						
3	04811-06630	O RING	1						Dia63
4	01754-50616	BOLT, FLANGE v	4						M6*P1.0
5	E5500-11302	OIL SEAL	1						
6	01754-50830	BOLT FLANGE	20						M8*P1.25
7	01125-50855	BOLT	1						
8	34150-2939-1	CLAMP, WIRE	2						-

----> Old replace New
<---> Interchangeable
* Please place an order assy(*)
<---- New replace Old
<-O-> Interchangeable with another part(s)
<-X-> Not interchangeable

https://tractormanualz.com/

EH2-G116001

CYLINDER HEAD COVER GROUP

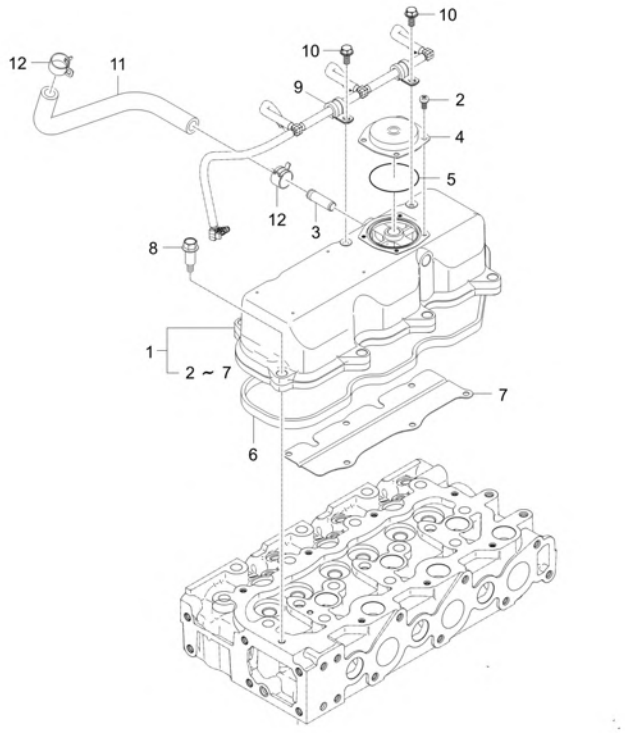

A : DK4510

No.	Part Number	Description	Qty A	Qty B	Qty C	Qty D	Qty E	I.C	Remark
1	F5850-14501	CYLINDER HEAD COVER ASSEMBLY v	1						
2	03024-50510	SCREW, WASHER	4						M5*P0.8
3	E6510-05552	CONNECTOR, AIR BREATHER HOSE	1						N
4	E6510-14532	COVER, VALVE	1						N
5	E6510-14671	O RING	1						N
6	F5800-14521	GASKET, CYLINDER HEAD COVER	1						
7	F5800-14561	PROTECT PLATE OF OIL	1						
8	E6510-33661	BOLT, CYLINDER HEAD COVER v	8						
9	F6800-15122	CLAMP, HOSE	2						
10	01754-50610	BOLT, FLANGE	2						M6XP1.0
11	F5830-05511	HOSE, BLOW BY	1						N
12	09318-88180	CLAMP, HOSE	2						

----> Old replace New
<---- New replace Old
<-X-> Not interchangeable
<---> Interchangeable
<-O-> Interchangeable with another part(s)
* Please place an order assy(*)

https://tractormanualz.com/

EH2-G117001

FLYWHEEL HOUSING GROUP

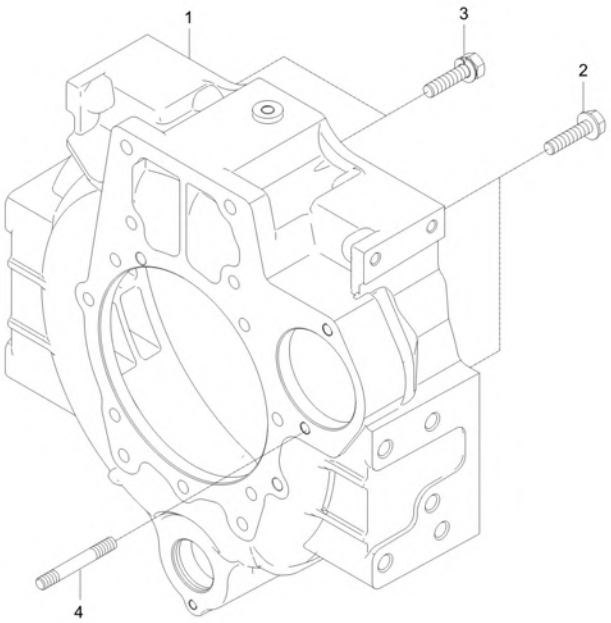

A : DK4510

No.	Part Number	Description	Qty A	Qty B	Qty C	Qty D	Qty E	I.C	Remark
1	F5831-04612	HOUSING, FLYWHEEL	1						
2	EF11-0001A	BOLT,FLANGEWITHPIN	11						HRC20-28
3	01133-51240	BOLT, WASHER	2						M12XP1.25
4	01517-51028	STUD	1						M10XP1.25

----> Old replace New
<---- New replace Old
<-X-> Not interchangeable
<---> Interchangeable
<-O-> Interchangeable with another part(s)
* Please place an order assy(*)

https://tractormanualz.com/

EH2-G121001

CRANK SHAFT GROUP

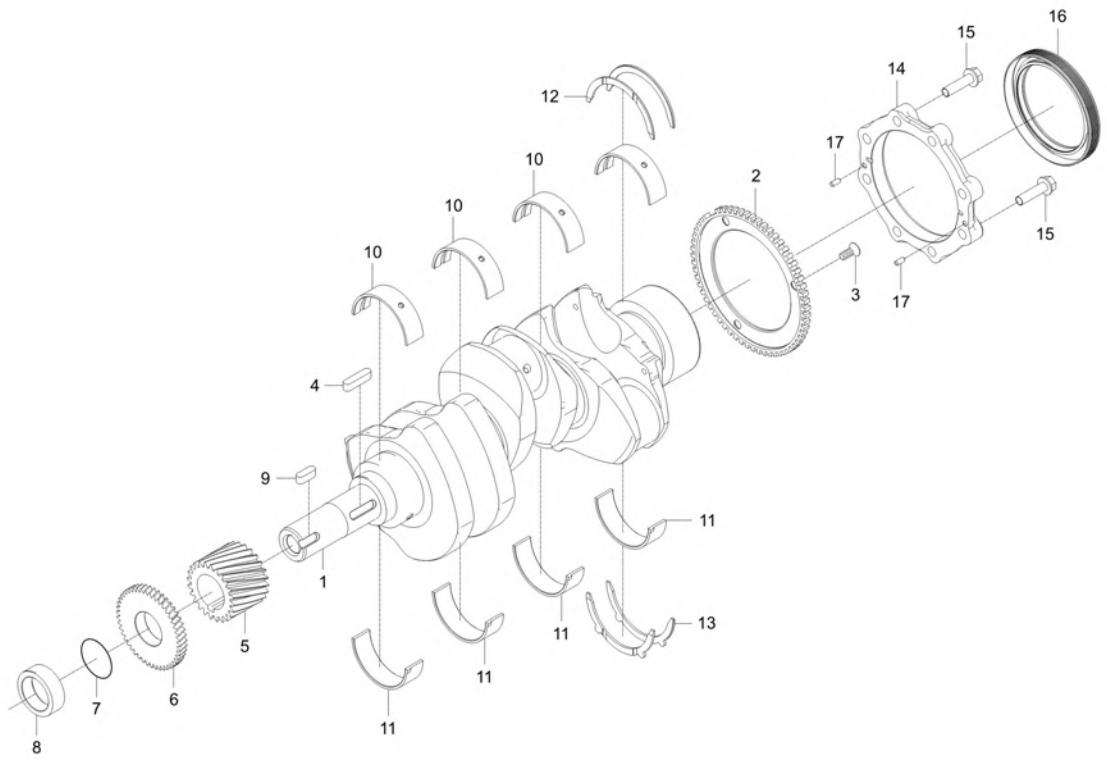

A : DK4510

No.	Part Number	Description	Qty A	Qty B	Qty C	Qty D	Qty E	I.C	Remark
1	F5800-23111	SHAFT CRANK dnr v	1						
2	F5800-06201	WHEEL, CRANK POSITION SENSOR	1						
3	03016-50616	SCREW	3						M6XP1.0
4	05712-00730	KEY	1						W7XL30
5	F6800-24111	CRANKSHAFT GEAR	1						
6	F6800-35631	GEAR OIL PUMP DRIVE	1						
7	04811-10300	O RING	1						
8	19202-2325-1	CRANKSHAFT COLLAR	1						DIA44*20
9	05712-00720	KEY	1						8*8*24
10	F6800-23481	BEARING, CRANKSHAFT UPR	4						
11	F6800-23491	BEARING, CRANKSHAFT LWR	4						
12	F6800-23531	BEARING, CRANKSHAFT THRUST UPR	2						
13	F6800-23541	BEARING, CRANKSHAFT THRUST LWR	2						
14	F6800-04811	CASE,OIL SEAL	1						
15	01654-50830	FLANGE BOLT	8						7T
16	E5500-04464	OIL SEAL v	1						
17	05012-00408	STRAIGHT PIN	2						

----> Old replace New
<---> Interchangeable
* Please place an order assy(*)
<---- New replace Old
<-O-> Interchangeable with another part(s)
<-X-> Not interchangeable

https://tractormanualz.com/

EH2-G122001

PISTON_CONNECTING ROD GROUP

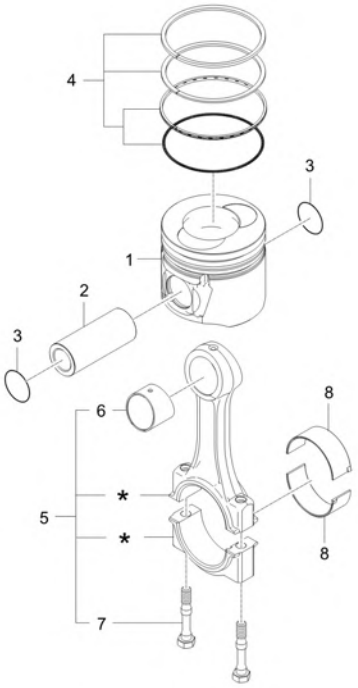

A : DK4510

No.	Part Number	Description	Qty A	Qty B	Qty C	Qty D	Qty E	I.C	Remark
1	F6720-21111	PISTON	3						
2	F5800-21311	PIN, PISTON	3						N
3	F5800-21331	RING, SNAP	6						N
4	E6302-21051	PISTON RING Assy	3						
5	F6800-22011	CONNECTING ROD	3						
6	F6800-21351	BUSH,PISTON PIN	1						
7	F6800-22141	BOLT	2						N
8	EF15-0004A	BEARING, CONNECTING ROD	6						

----> Old replace New
<---> Interchangeable
* Please place an order assy(*)
<---- New replace Old
<-O-> Interchangeable with another part(s)
<-X-> Not interchangeable

https://tractormanualz.com/

EH2-G123001

CAMSHAFT GROUP

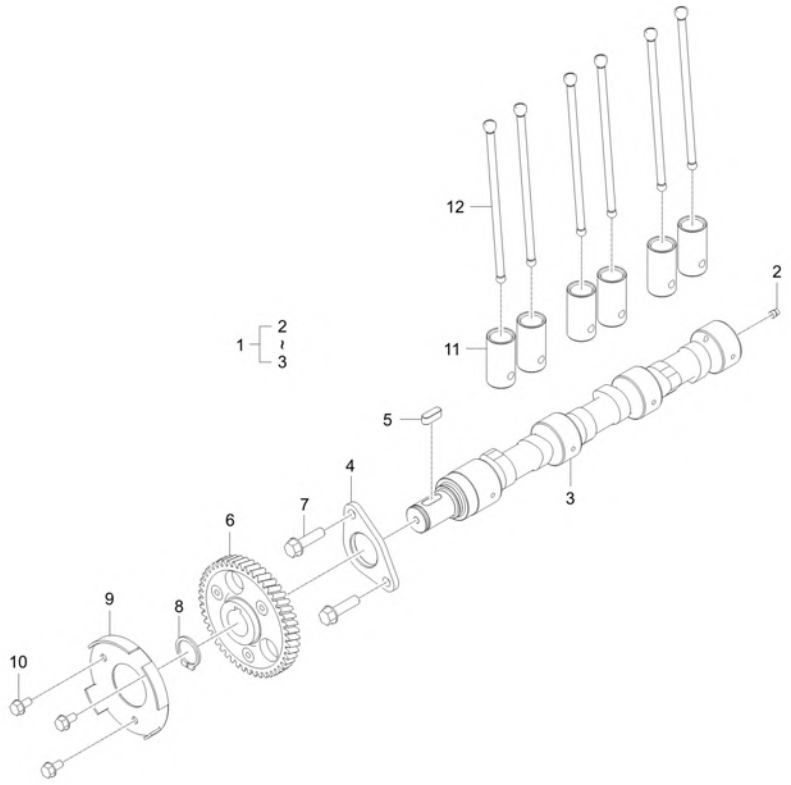

A : DK4510

No.	Part Number	Description	Qty A	Qty B	Qty C	Qty D	Qty E	I.C	Remark
1	F5800-16012	ASSY CAMSHAFT v	1						N
2	06350-00607	PLUG v	2						
3	F5800-16152	CAMSHAFT	1						N
4	F6800-16271	STOP, CAM SHAFT	1						
5	05712-00720	KEY	1						8*8*24
6	F6800-16511	CAMSHAFT GEAR	1						
7	01754-50830	BOLT FLANGE	2						M8*P1.25
8	E5205-24321	SNAP RING	1						T2
9	F6800-09051	WHEEL, CAMSHAFT SENSOR	1						2T
10	01754-50612	BOLT, FLANGE	3						M6*1.0
11	E5500-15553	TAPPET	6						DIA26*51
12	F6800-15111	ROD PUSH v	6						

----> Old replace New <---- New replace Old <-X-> Not interchangeable
<---> Interchangeable <-O-> Interchangeable with another part(s)
* Please place an order assy(*)

https://tractormanualz.com/

EH2-G124001

IDLE GEAR GROUP

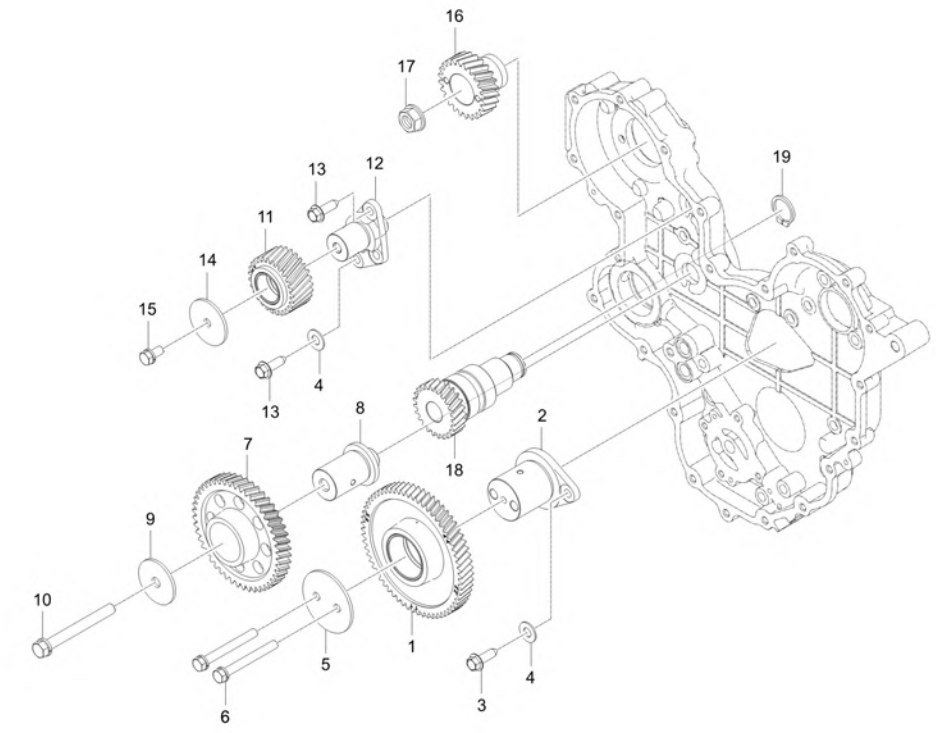

A : DK4510

No.	Part Number	Description	Qty A	Qty B	Qty C	Qty D	Qty E	I.C	Remark
1	F5850-10102	Assy IDLE GEAR1	1						-
2	F6800-10155	SHAFT,IDLEGEAR1 v	1						-
3	EF15-0030A	FLANGE BOLT v	2						
4	EF15-0029A	NORD-LOCK WASHER v	3						
5	F6800-10163	STOPPER 1, IDLE GEAR	1						-
6	01123-50870	WASHER BOLT	2						
7	F6800-10301	IDLE GEAR ASSY, 3	1						
8	F6800-10353	SHAFT 3, IDLE GEAR v	1						-
9	F6800-10261	STOPPER, IDLE GEAR 2	1						
10	01133-51090	BOLT	1						P1.25
11	F6800-10401	IDLE GEAR ASSY, 4	1						
12	F6800-10455	SHAFT,IDLEGEAR4 v	1						-
13	EF15-0038A	BOLT, FLANGE	3						-
14	F6800-10261	STOPPER, IDLE GEAR 2	1						
15	EF15-0039A	BOLT, WITH WASHER	1						-
16	EH32-0001A	GEAR, HP FUEL PUMP	1						-
17	F6800-92771	FLANGE NUT	1						M14x1.5
18	F6800-10612	GEAR, HYDRAULIC PUMP DRIVE	1						-

----> Old replace New
<----> Interchangeable
* Please place an order assy(*)
<---- New replace Old
<-O-> Interchangeable with another part(s)
<-X-> Not interchangeable

https://tractormanualz.com/

EH2-G124001

IDLE GEAR GROUP

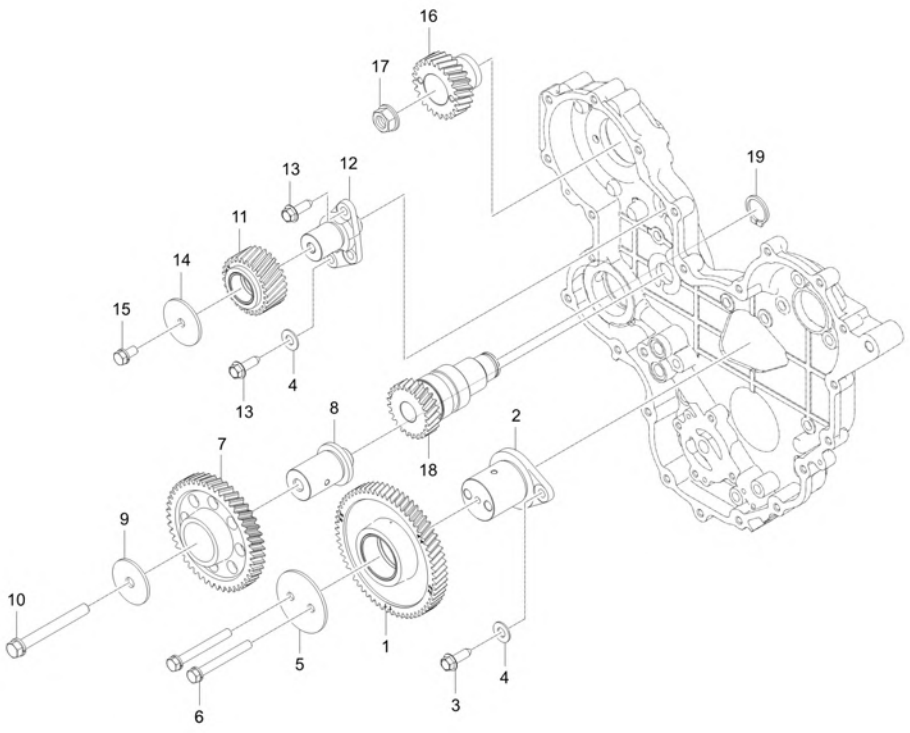

A : DK4510

No.	Part Number	Description	Qty A	Qty B	Qty C	Qty D	Qty E	I.C	Remark
19	15471-9536-1	SNAP_RING	1						

----> Old replace New
<---- New replace Old
<-X-> Not interchangeable
<---> Interchangeable
<-O-> Interchangeable with another part(s)
* Please place an order assy(*)

https://tractormanualz.com/

EH2-G125001

ROCKER ARM_VALVE GROUP

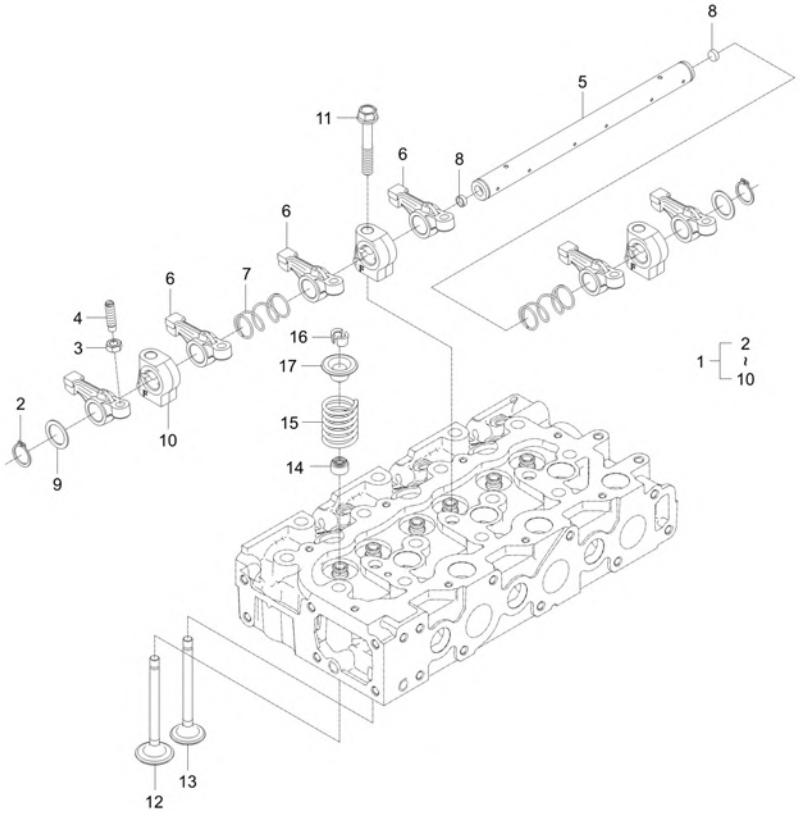

A : DK4510

No.	Part Number	Description	Qty A	Qty B	Qty C	Qty D	Qty E	I.C	Remark
1	F5800-14001	ASSY ARM,ROCKER	1						
2	04612-00190	SNAP RING	2						
3	15021-1424-1	NUT	6						HEX12,M8*1.0*11
4	E5500-14232	SCREW,ADJUSTING	6						DIA10,M8*1.0*34
5	E5800-14261	SHAFT,ROCKER ARM	1						
6	E6301-14111	ROCKERARM	6						
7	E6301-14311	ROCKERARM SPRING	2						
8	E6301-14331	CAP, SEALING obs v	2						
9	E6301-14431	PLAIN WASHER	2						T1.2*30*30
10	F6800-14351	BRACKET, ROCKER ARM	3						
11	E6510-91502	BOLT,(R/A SUPPORT) v	3						
12	E6700-13111	VALVE, INTAKE	3						
13	E6700-13121	EXHAUST VALVE v	3						
14	E6301-13151	SEAL, VALVE STEM	6						
15	E6400-13241	SPRING, VALVE	6						
16	E6403-13361	COLLET,VALVE SPRING v	12						KK8(독일 TRW)
17	E5500-13333	RETAINER VALVE SPRING v	6						

----> Old replace New <---- New replace Old <-X-> Not interchangeable
<---> Interchangeable <-O-> Interchangeable with another part(s)
* Please place an order assy(*)

https://tractormanualz.com/

EH2-G126001

FLYWHEEL GROUP

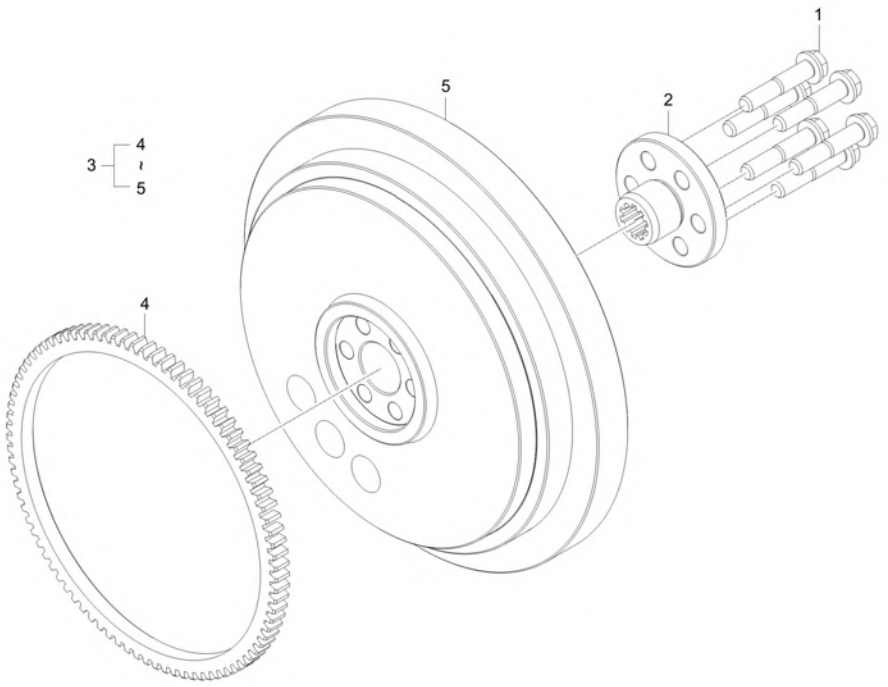

A : DK4510

No.	Part Number	Description	Qty A	Qty B	Qty C	Qty D	Qty E	I.C	Remark
1	E5800-25161	BOLT, FLYWHEEL	6						
2	E5800-25182	HUB, SPLINE	1						
3	F5810-25013	ASS'Y FLYWHEEL	1						N
3	F5810-25014	ASSY FLYWHEEL	1					<----->	-
4	E7103-63821	GEAR RING (use 15221-63824) dnr v	1						
5	F5810-25113	FLYWHEEL	1						N
5	F5810-25114	FLYWHEEL	1					<----->	-

----> Old replace New
<----> Interchangeable
* Please place an order assy(*)
<---- New replace Old
<-O-> Interchangeable with another part(s)
<-X-> Not interchangeable

https://tractormanualz.com/

EH2-G127002

CRANK SHAFT FULLEY GROUP

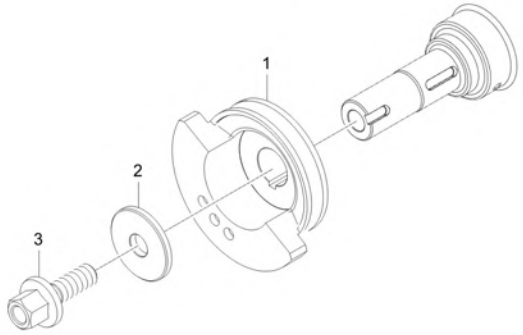

A : DK4510

No.	Part Number	Description	Qty A	Qty B	Qty C	Qty D	Qty E	I.C	Remark
1	F5830-74282	PULLEY,CRANK SHAFT	1						N
2	F6800-23501	CRANKSHAFT WASHER	1						-
3	F6800-92311	BOLT, CRANKSHAFT	1						-

----> Old replace New
<----> Interchangeable
* Please place an order assy(*)
<---- New replace Old
<-O-> Interchangeable with another part(s)
<-X-> Not interchangeable

https://tractormanualz.com/

EH2-G131001

INTAKE MANIFOLD GROUP

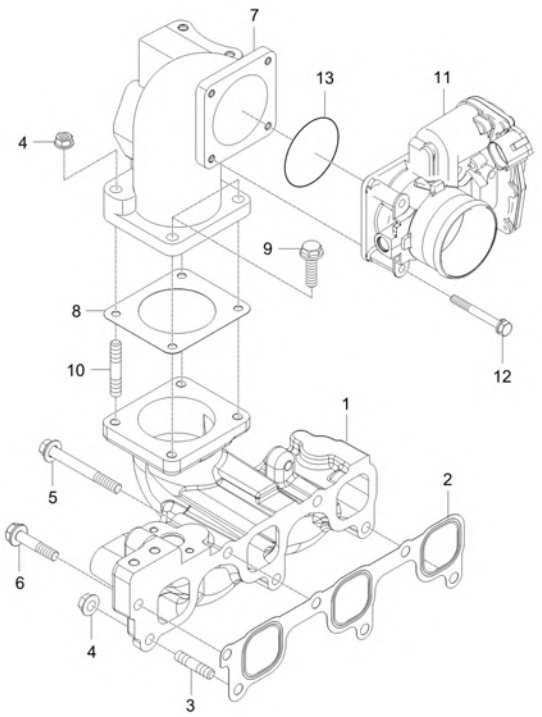

A : DK4510

No.	Part Number	Description	Qty A	Qty B	Qty C	Qty D	Qty E	I.C	Remark
1	EH23-0002B	MANIFOLD, INLET	1						-
2	F5800-11821	GASKET, INTAKE MANIFOLD	1						
3	01513-50822	STUD	1						M8*1.25
4	02763-50080	FLANGE NUT	1						M8XP1.25
5	01125-50870	BOLT, WASHER	2						
6	01754-50830	BOLT FLANGE	3						M8*P1.25
7	F5830-17202	FLANGE,INTAKEMANIFOLD	1						N
8	F6800-17211	GASKET, INTAKE MANIFOLD FLANGE	1						
9	01754-50822	BOLT, FLANGE	2						
10	01513-50835	STUD	2						
11	F6800-17701	AIR CONTROL VALVE ASSY	1						
12	01023-50645	BOLT, WASHER v	4						
13	EH13-0002A	O RING-ACV v	1						

----> Old replace New <---- New replace Old <-X-> Not interchangeable
<---> Interchangeable <-O-> Interchangeable with another part(s)
* Please place an order assy(*)

https://tractormanualz.com/

EH2-G132002

INTAKE HOSE GROUP

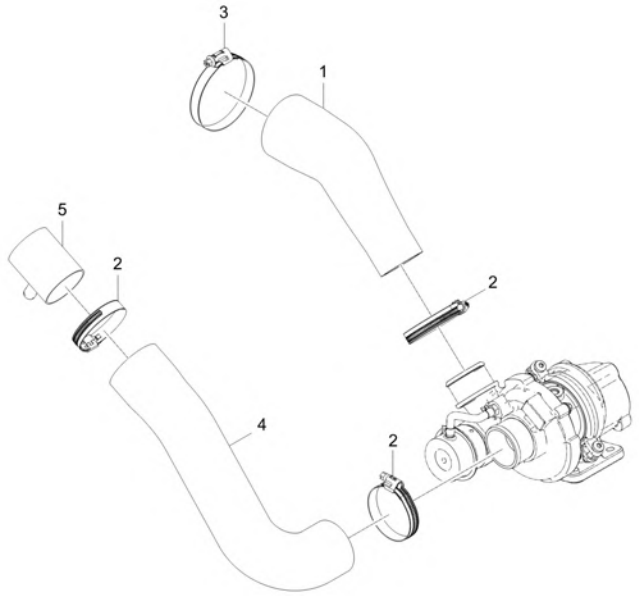

A : DK4510

No.	Part Number	Description	Qty A	Qty B	Qty C	Qty D	Qty E	I.C	Remark
1	F6800-11651	HOSE, INLET	1						
2	F6800-91812	HOSE CLAMP	3						
3	F6800-91822	HOSE CLAMP	1						
4	F5810-18943	INLET HOSE, 1	1						N
5	F6800-18961	BLOWBY CONNECTOR	1						

----> Old replace New
<----> Interchangeable
* Please place an order assy(*)
<---- New replace Old
<-O-> Interchangeable with another part(s)
<-X-> Not interchangeable

https://tractormanualz.com/

EH2-G133001

EXHAUST MANIFOLD GROUP

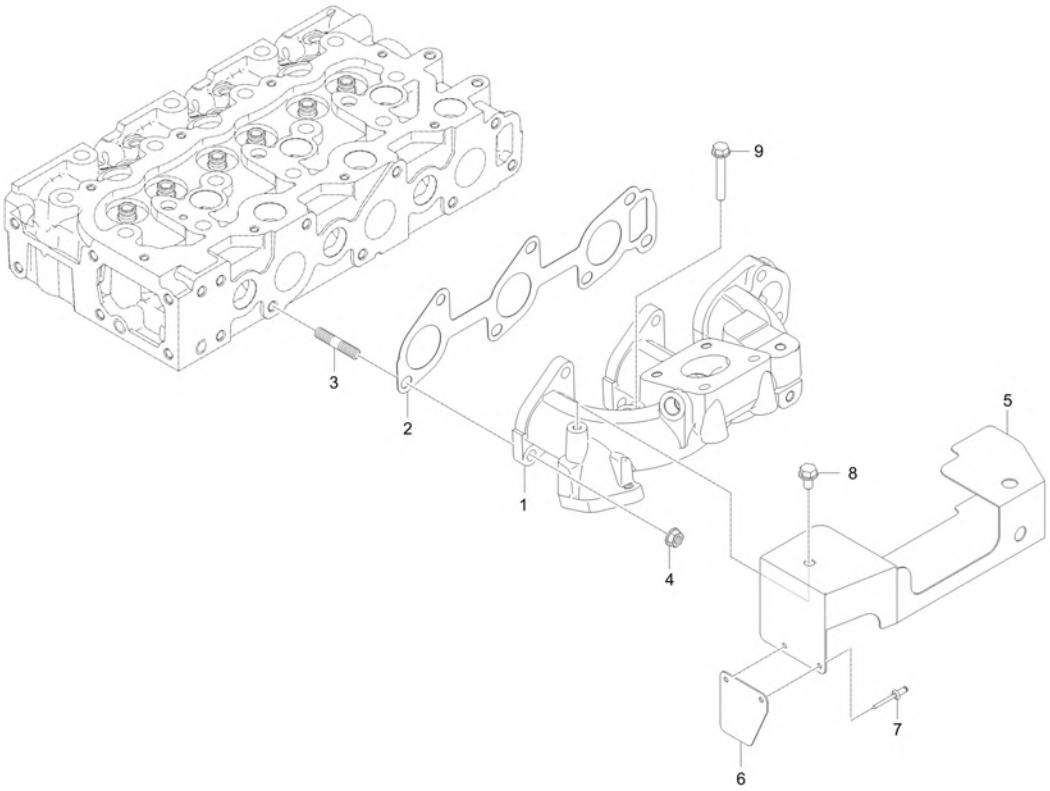

A : DK4510

No.	Part Number	Description	Qty A	Qty B	Qty C	Qty D	Qty E	I.C	Remark
1	F5800-12313	MANIFOLD,EXHAUST	1						
2	F5800-12351	GASKET, EXHAUST MANIFOLD	1						
3	F6800-92451	BOLT, STUD	5						M8*P1.25
3	F6800-92452	BOLT, STUD	5					<------	M8*P1.25
4	F6800-91911	U-NUT	5						-
5	F5800-13764	PLATE,HEAT	1						t1.2
6	F5800-13773	PLATE	1						t1.2
7	F6800-94111	RIVET	2						
8	01754-50610	BOLT, FLANGE	1						M6XP1.0
9	01754-50640	FLANGE BOLT	1						

----> Old replace New
<----> Interchangeable
* Please place an order assy(*)
<---- New replace Old
<-O-> Interchangeable with another part(s)
<-X-> Not interchangeable

https://tractormanualz.com/

EH2-G134001

TURBO GROUP

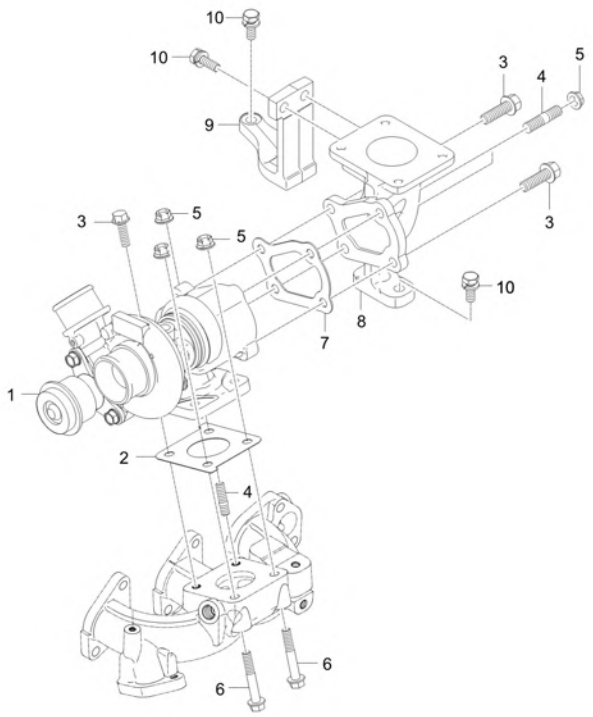

A : DK4510

No.	Part Number	Description	Qty A	Qty B	Qty C	Qty D	Qty E	I.C	Remark
1	F5800-17011	TURBOCHARGER ASSY dnr v	1						
1	F5800-17012	TURBOCHARGER ASSY v	1					<----->	-
2	F6800-17101	GASKET 1, TURBOCHARGER	1						
3	F6800-92411	FLANGEBOLT	3						M8x1.25 25mm
3	F6800-92411	FLANGEBOLT	1					<----->	M8x1.25 25mm
4	F6800-92441	BOLT, STUD	3						
4	F6800-92441	BOLT, STUD	5					<----->	
5	F6800-91911	U-NUT	5						-
5	F6800-91911	U-NUT	7					<----->	-
6	F6800-92421	FLANGEBOLT	2						M8x1.25 65mm
7	F6800-17111	GASKET 2, TURBOCHARGER	1						t1.5
8	F6800-11951	FLANGE, TURBOCHARGER	1						
9	F6800-25501	SUPPORT, TURBOCHARGER FLANGE	1						
10	01123-50822	WASHER BOLT	5						M8XP1.25

----> Old replace New
<---- New replace Old
<-X-> Not interchangeable
<---> Interchangeable
<-O-> Interchangeable with another part(s)
* Please place an order assy(*)

https://tractormanualz.com/

EH2-G135001

TURBO PIPE GROUP

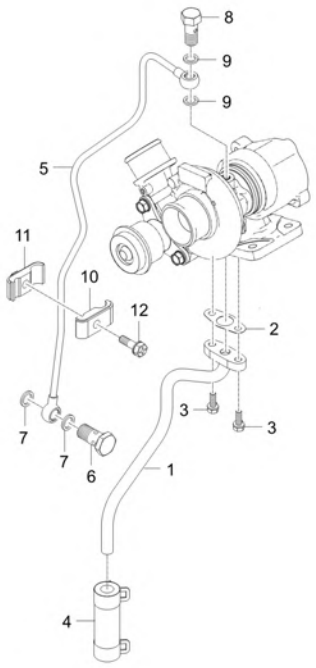

A : DK4510

No.	Part Number	Description	Qty A	Qty B	Qty C	Qty D	Qty E	I.C	Remark
1	F5800-33051	OIL DRAIN PIPE ASSY	1						
2	F6800-33671	GASKET	1						
3	01023-50618	BOLT w- WASHER	2						
4	E6500-33201	HOSE, OIL ASS`Y	1						
5	F5800-33041	OIL FEEDING PIPE ASSY	1						
6	E5629-24401	EYE BOLT	1						
7	04724-00120	PACKING	2						T2.0
8	E6500-95802	CONNECTOR 2	1						
8	E6500-95803	CONNECTOR 2	1					<------	
9	E6301-33661	GASKET	2						
10	E6520-34011	CLAMP 1, HOSE	1						
11	E6520-34021	CLAMP 2, HOSE	1						
12	01202-50625	BOLT WASHER	1						
13	01202-50620	BOLT	1						

----> Old replace New
<----> Interchangeable
* Please place an order assy(*)
<---- New replace Old
<-O-> Interchangeable with another part(s)
<-X-> Not interchangeable

https://tractormanualz.com/

EH2-G141001

OIL PUMP GROUP

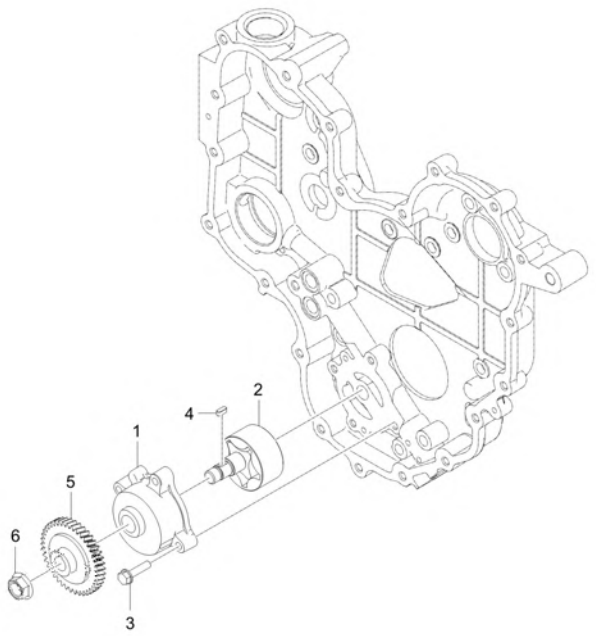

A : DK4510

No.	Part Number	Description	Qty A	Qty B	Qty C	Qty D	Qty E	I.C	Remark
1	F6800-04302	COVER, OIL PUMP	1						-
2	F6800-04401	OIL PUMP ROTOR SHAFT ASSY	1						N
3	01754-50625	BOLT, FLANGE	4						7T
4	05712-00410	KEY	1						5*5*14
5	F6800-35661	GEAR, OIL PUMP	1						-
6	E6300-35681	FLANGE NUT	1						M12*P1.25

----> Old replace New
<----> Interchangeable
* Please place an order assy(*)
<---- New replace Old
<-O-> Interchangeable with another part(s)
<-X-> Not interchangeable

https://tractormanualz.com/

EH2-G142001

OIL PAN GROUP

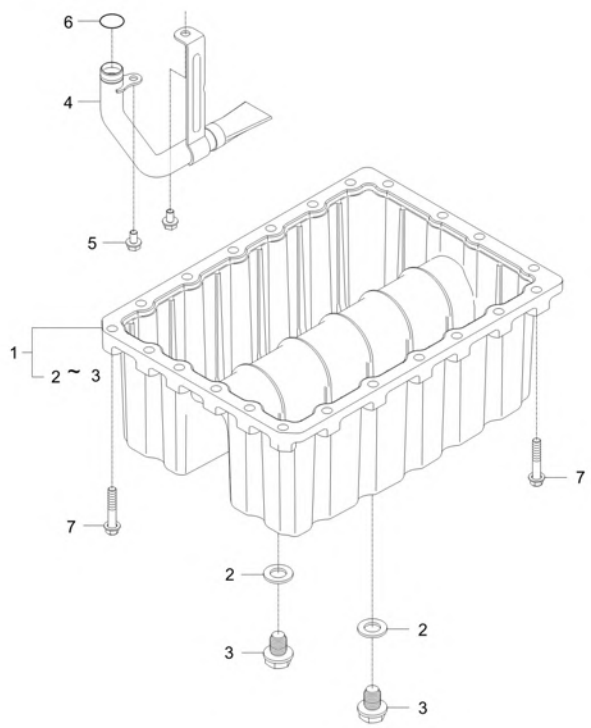

A : DK4510

No.	Part Number	Description	Qty A	Qty B	Qty C	Qty D	Qty E	I.C	Remark
1	F5800-01601	ASSY FAN,OIL v	1						
1	F5800-01602	ASSY FAN,OIL v	1					<------	-
2	E6303-33661	GASKET	2						2.0t
3	E6303-33751	PLUG	2						-
3	E6303-33752	PLUG	2					<------	-
4	F5800-32111	OIL STRAINER ASSY	1						
5	01754-50610	BOLT, FLANGE	2						M6XP1.0
6	04811-00150	O RING v	1						
7	01654-50835	BOLT	22						M8x1.25

----> Old replace New
<---- New replace Old
<-X-> Not interchangeable
<---> Interchangeable
<-O-> Interchangeable with another part(s)
* Please place an order assy(*)

https://tractormanualz.com/

EH2-G143001

OIL GAUGE GROUP

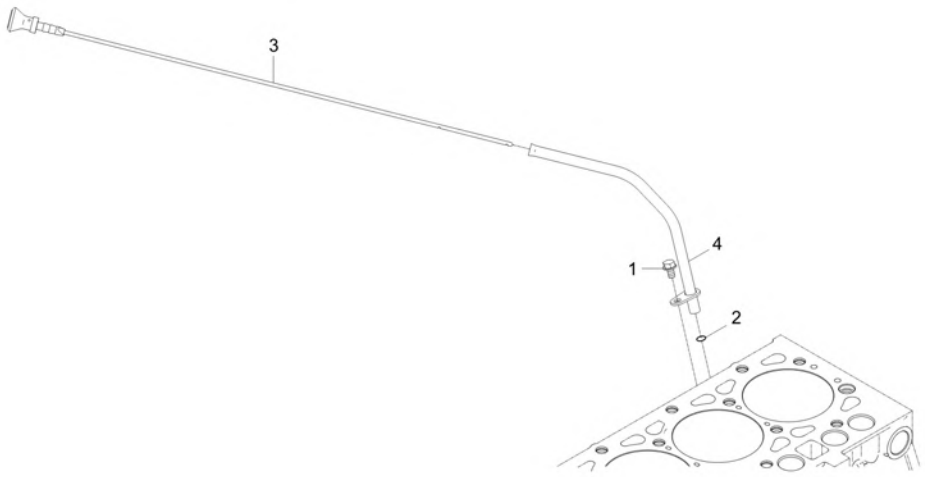

A : DK4510

No.	Part Number	Description	Qty A	Qty B	Qty C	Qty D	Qty E	I.C	Remark
1	01754-50610	BOLT, FLANGE	1						M6XP1.0
2	04811-00100	O RING	1						
3	F5800-36413	GAUGE,OIL	1						-
3	F5800-36414	GAUGE,OIL	1					<----->	-
4	EF15-0044A	ASSYGUIDE,OILGAUGE	1						

----> Old replace New
<----> Interchangeable
* Please place an order assy(*)
<---- New replace Old
<-O-> Interchangeable with another part(s)
<-X-> Not interchangeable

https://tractormanualz.com/

EH2-G144001

OIL FILTER GROUP

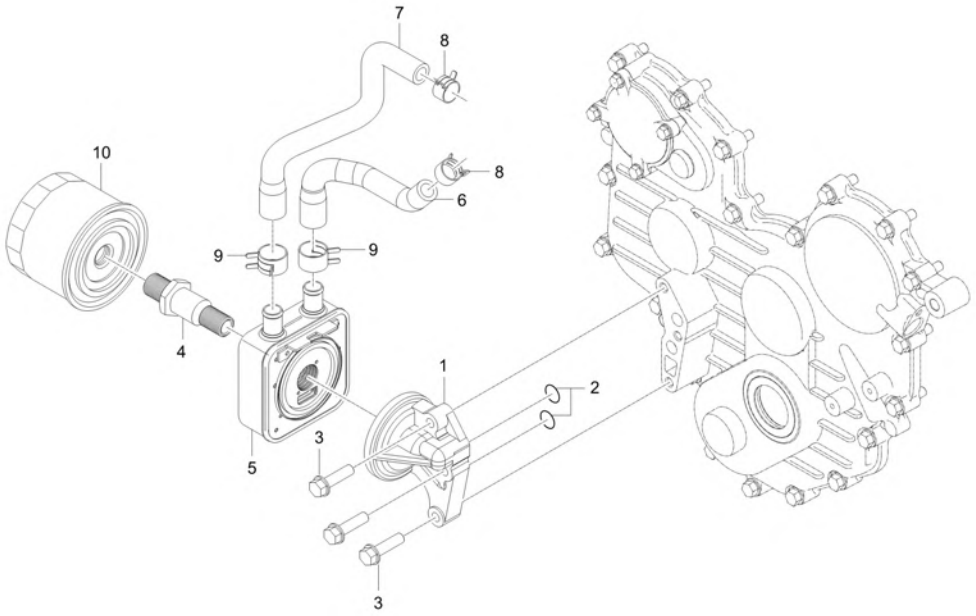

A : DK4510

No.	Part Number	Description	Qty A	Qty B	Qty C	Qty D	Qty E	I.C	Remark
1	E5850-32617	SUPPORT,OIL FILTER	1						-
2	04816-00150	O_RING	2						DIA14.8
3	01754-50830	BOLT FLANGE	3						M8*P1.25
4	E6810-32292	TUBE, CONNECTING	1						N
5	E6820-32451	COOLER, OIL	1						-
6	F6800-16161	HOSE 1, OIL COOLER	1						
7	F6800-16172	HOSE 2, OIL COOLER	1						N
8	09318-88180	CLAMP, HOSE	2						
9	09318-88220	O-RING	2						
10	E6201-32443	OIL FILTER sp v	1						

----> Old replace New
<---- New replace Old
<-X-> Not interchangeable
<---> Interchangeable
<-O-> Interchangeable with another part(s)
* Please place an order assy(*)

https://tractormanualz.com/

EH2-G151001

FUEL EQUIPMENT GROUP

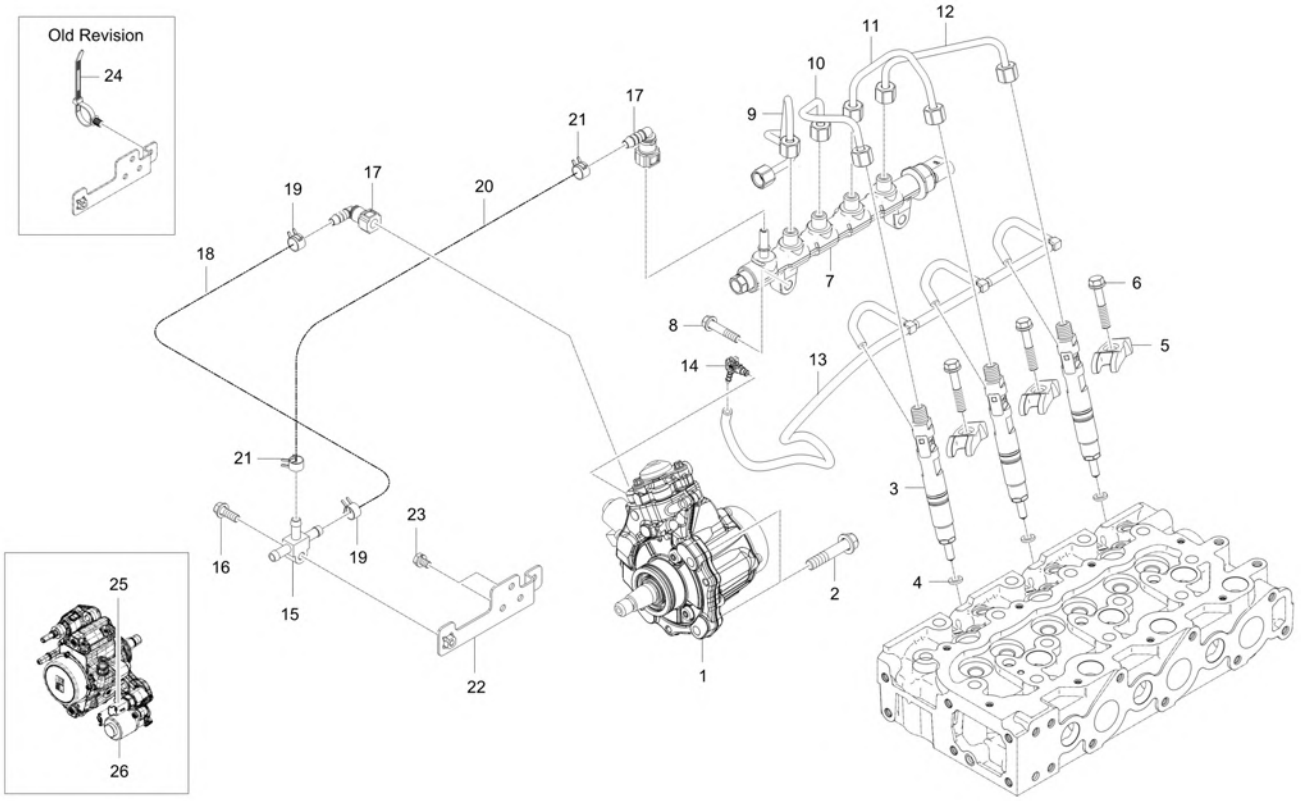

A : DK4510

No.	Part Number	Description	Qty A	Qty B	Qty C	Qty D	Qty E	I.C	Remark
1	EH35-0001A	ASSY PUMP, HP FUEL	1						
2	01754-50835	BOLT v	3						M8XP1.25
3	EH15-0001A	ASSY INJECTOR	3						
3	EH15-0001B	ASSY INJECTOR	4 XR7600075 ~					<--O-->	
4	F6800-53181	SEAT, INJECTOR	3						t2.0
5	F6805-53453	CLAMP, INJECTOR	3						
6	F6800-53471	BOLT, INJECTOR CLMAP	3						
7	EH35-0002A	ASSY RAIL, FUEL	1						
8	01754-50830	BOLT FLANGE	2						M8XP1.25
9	EH35-0005A	PIPE, RAIL	1						
10	F6800-53722	PIPE 2, INJECTION	1						
11	F6800-53732	PIPE 3, INJECTION	1						
12	F6800-53742	PIPE 4, INJECTION	1						
13	EH25-0001A	ASSY TUBE, INJECTOR RETURN	1						
14	F6800-42511	CONNECTOR	1						
15	EH35-0015A	JOINT, FUEL HOSE dnr v	1						
15	EH35-0015B	JOINT, FUEL HOSE v	1					<------	
16	01754-50625	BOLT, FLANGE	1						M6XP1.0

----> Old replace New
<----> Interchangeable
* Please place an order assy(*)
<---- New replace Old
<-O-> Interchangeable with another part(s)
<-X-> Not interchangeable

https://tractormanualz.com/

EH2-G151001

FUEL EQUIPMENT GROUP

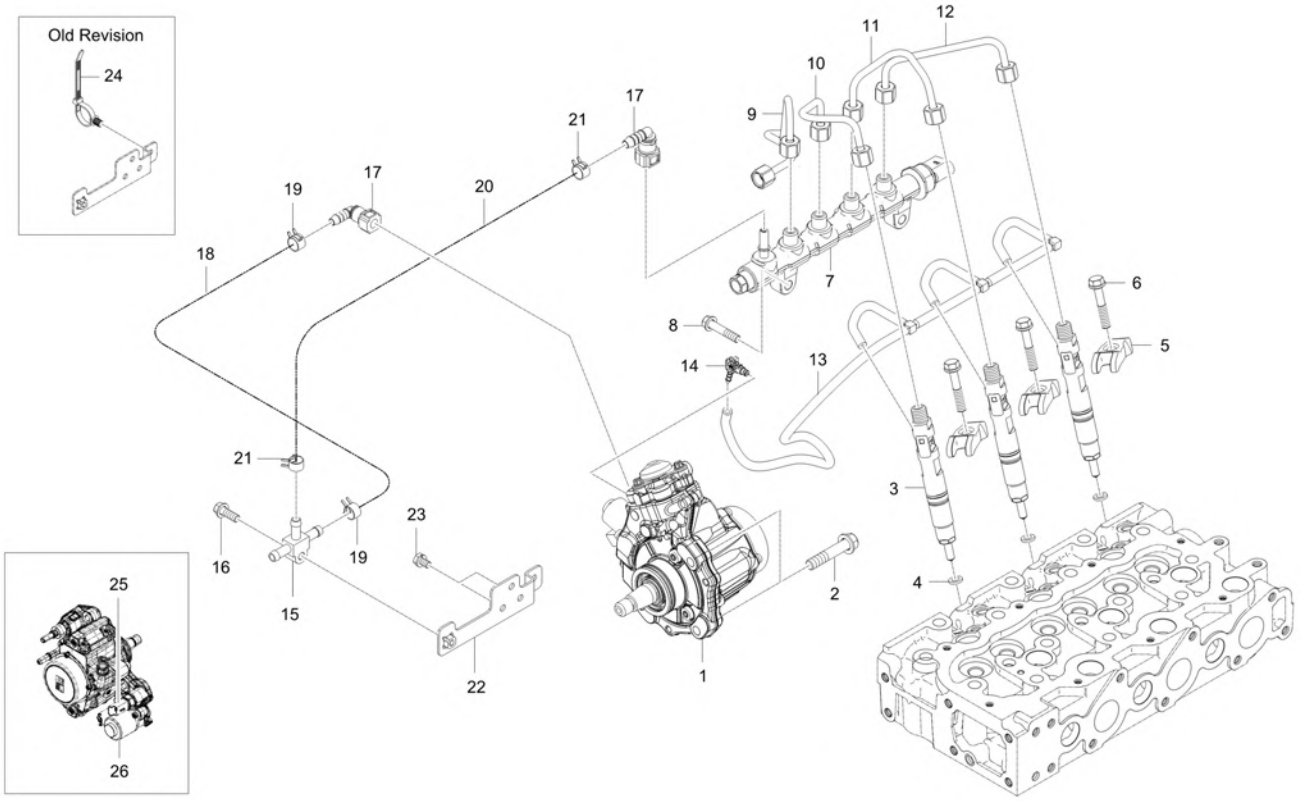

A : DK4510

No.	Part Number	Description	Qty A	Qty B	Qty C	Qty D	Qty E	I.C	Remark
17	EH25-0006A	CONNECTOR, QUICK-128-783-002	2						
18	09661-80260	HOSE, FUEL	1						
19	09318-88130	CLAMP, HOSE	2						DIA13
20	09661-80150	HOSE, FUEL	1						
21	14911-4275-1	CLIP, TUBE	2						T0.8*#12
22	EH35-0018A	BRACKET FUEL HOSE	1						
23	01023-50610	BOLT, WASHER	2						M6XP1.0
24	T2198-82571	BAND CABLE	1						
25	F6800-12103002	FUEL TEMPERATURE SENSOR	1						-
26	EH15-0016A	IMV VALVE	1						

----> Old replace New
<---> Interchangeable
* Please place an order assy(*)
<---- New replace Old
<-O-> Interchangeable with another part(s)
<-X-> Not interchangeable

https://tractormanualz.com/

EH2-G161001

OIL JET GROUP

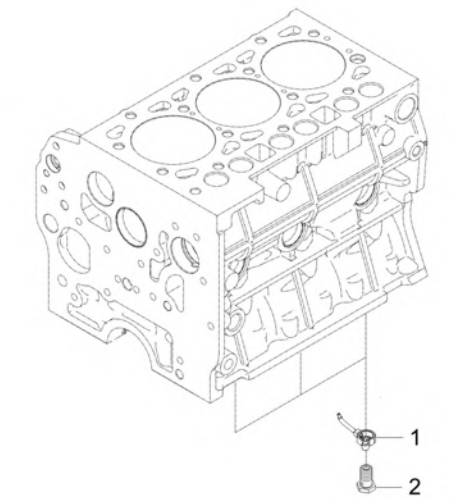

A : DK4510

No.	Part Number	Description	Qty A	Qty B	Qty C	Qty D	Qty E	I.C	Remark
1	F6800-01311	BODY, PISTON COOLING JET	3						
2	F6800-01321	VALVE, PISTON COOLING JET	3						

----> Old replace New
<----> Interchangeable
* Please place an order assy(*)
<---- New replace Old
<-O-> Interchangeable with another part(s)
<-X-> Not interchangeable

https://tractormanualz.com/

EH2-G162001

WATER FLANGE GROUP

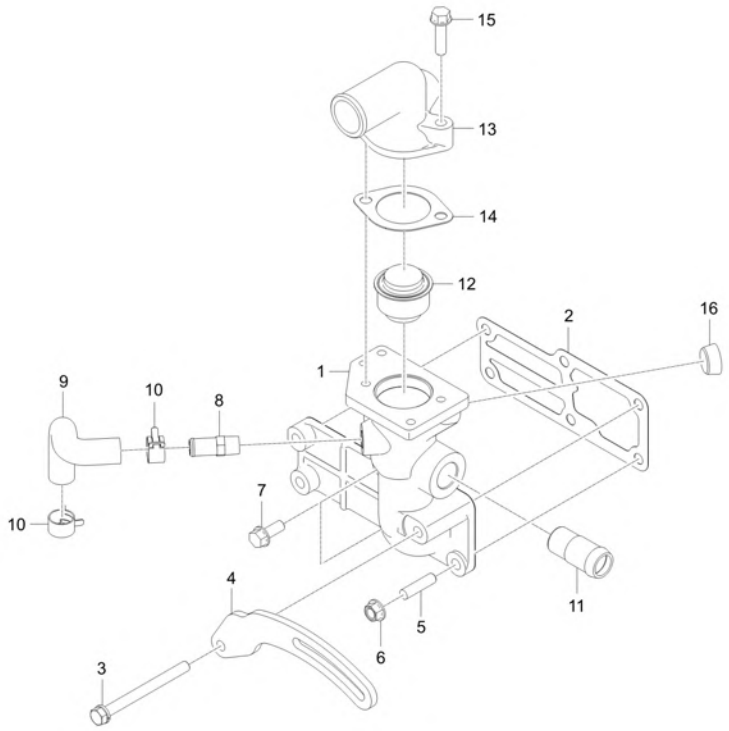

A : DK4510

No.	Part Number	Description	Qty A	Qty B	Qty C	Qty D	Qty E	I.C	Remark
1	F5830-72914	PLANGE, WATER dnr v	1						N
2	F6800-72921	GASKET COOLING WATER FLANGE	1						
3	01123-50870	WASHER BOLT	1						
4	F6800-64421	SUPPORT, ALTERNATOR dnr v	1						
5	01513-50822	STUD	1						M8*1.25
6	02763-50080	FLANGE NUT	1						M8XP1.25
7	01754-50820	BOLT, FLANGE	2						M8XP1.25
8	E5500-73342	HOSE, WATER RETURN v	1						
8	E5500-73343	PIPE, WATER RETURN	1					<------	
9	E6850-73342	HOSE, WATER PUMP v	1						
10	09318-88180	CLAMP, HOSE	2						
11	F6800-13311	CONNECTOR, COOLANT	1						DIA22.3
12	E5500-73013	THERMOSTAT ASSEMBLY	1						
13	E6308-73261	COVER, THERMOSTAT	1						
14	E5500-73272	GASKET v	1						t1.0
15	01754-50830	BOLT FLANGE	2						M8*P1.25
16	F6860-96042	PLUG	1						PT1/2

----> Old replace New <---- New replace Old <-X-> Not interchangeable
<---> Interchangeable <-O-> Interchangeable with another part(s)
* Please place an order assy(*)

https://tractormanualz.com/

EH2-G163001

WATER PUMP GROUP

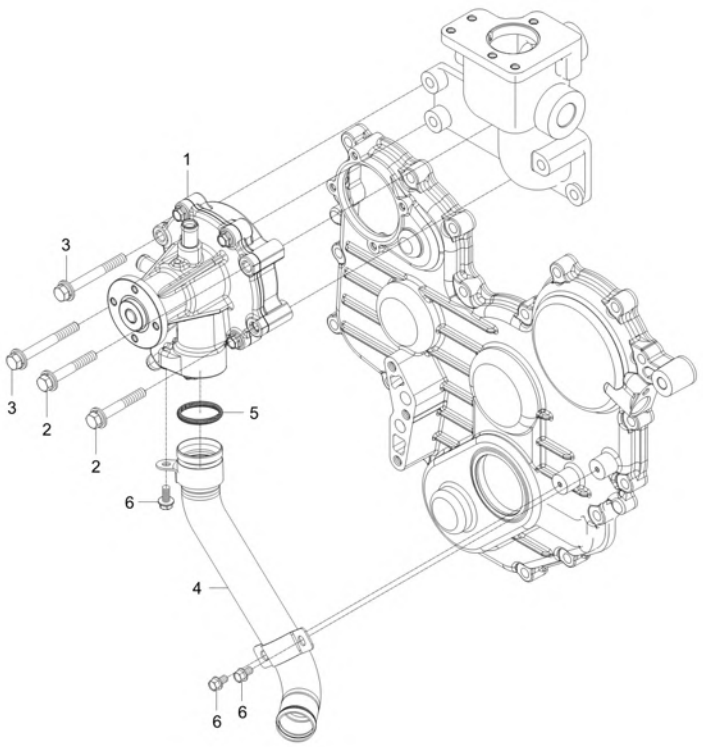

A : DK4510

No.	Part Number	Description	Qty A	Qty B	Qty C	Qty D	Qty E	I.C	Remark
1	F6800-73031	ASSY PUMP,WATER sp v	1						
2	01125-50850	BOLT, WASHER	2						M8*P1.25
3	01125-50870	BOLT, WASHER	2						
4	F6800-73051	WATER PUMP PIPE ASSY	1						
5	04811-00320	O RING v	1						(P32)
6	01754-50610	BOLT, FLANGE	3						M6XP1.0

----> Old replace New
<----> Interchangeable
* Please place an order assy(*)
<---- New replace Old
<-O-> Interchangeable with another part(s)
<-X-> Not interchangeable

https://tractormanualz.com/

EH2-G171001

EGR GROUP

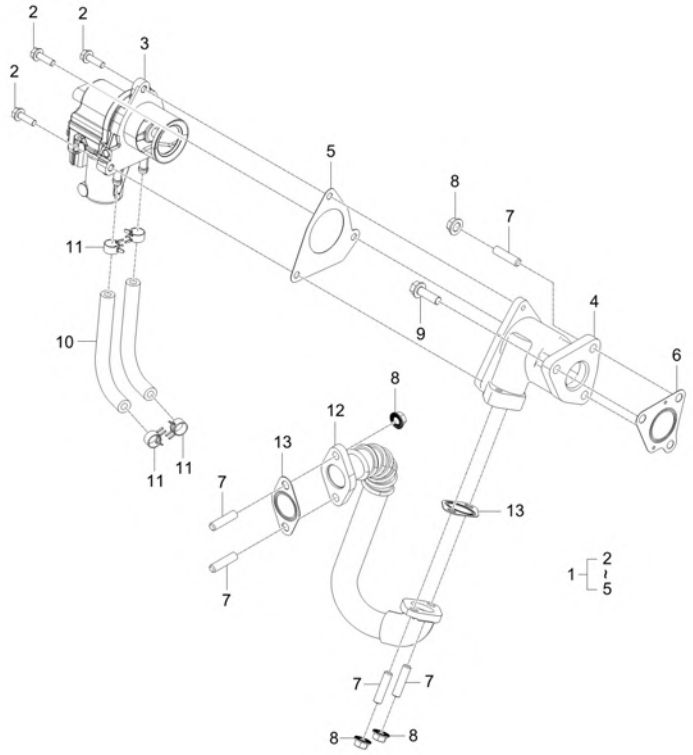

A : DK4510

No.	Part Number	Description	Qty A	Qty B	Qty C	Qty D	Qty E	I.C	Remark
1	F5800-17503	EGR VALVE AND HOUSING ASSY	1						
2	01754-50620	BOLT, FLANGE	3						
3	F5800-17512	EGR VALVE ASSY	1						
4	F5800-17522	EGR HOUSING HOUSING	1						-
5	F5800-17531	GASKET	1						
6	F6800-17551	GASKET, EGR HOUSING	1						
7	01513-50822	STUD	5						M8*1.25
8	02763-50080	FLANGE NUT	5						M8XP1.25
9	01754-50825	BOLT, FLANGE	2						M8XP1.25
10	F5830-17562	COOLING HOSE	2						
11	09318-88130	CLAMP, HOSE	4						
12	F5830-17801	EGR PIPE ASSY	1						N
13	F6800-20301	GASKET, EGR	2						

----> Old replace New
<---- New replace Old
<-X-> Not interchangeable
<---> Interchangeable
<-O-> Interchangeable with another part(s)
* Please place an order assy(*)

https://tractormanualz.com/

EH2-G172001

EGR COOLER GROUP

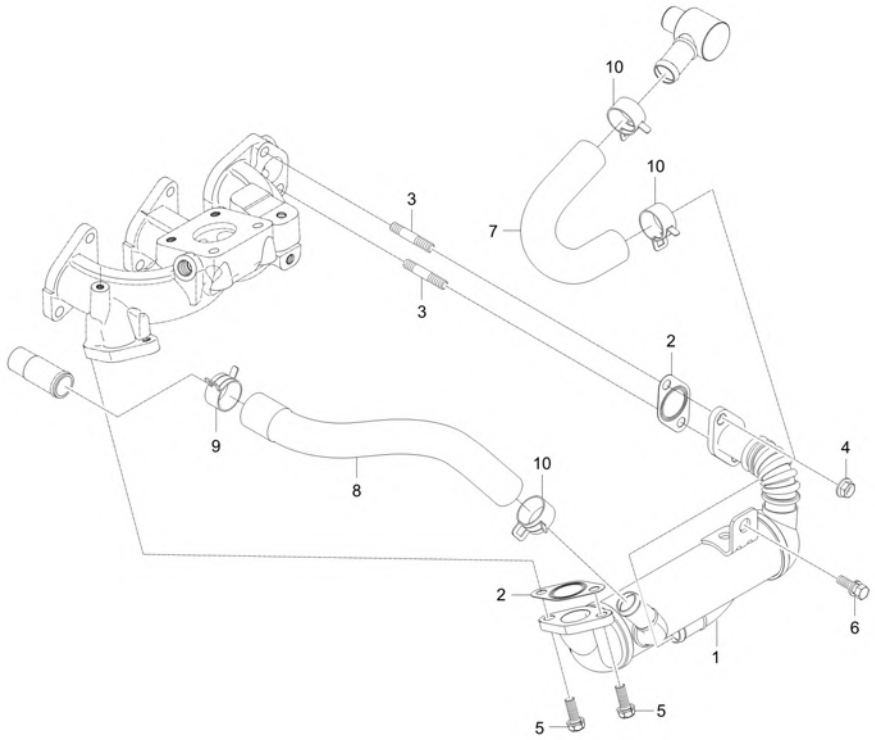

A : DK4510

No.	Part Number	Description	Qty A	Qty B	Qty C	Qty D	Qty E	I.C	Remark
1	F5800-20101	EGR COOLER ASSY	1						
2	F6800-20301	GASKET, EGR	2						
3	01513-50835	STUD	2						
4	F6800-91911	U-NUT	2						-
5	01123-50822	WASHER BOLT	2						M8XP1.25
6	01123-50816	Hex Head Cap Screw	1						M8XP1.25
7	F6800-20401	HOSE 1, EGR COOLER	1						
8	F6800-20501	HOSE 2, EGR COOLER	1						
9	09318-88260	HOSE CLAMP	1						
10	09318-88250	CLAMP	3						

----> Old replace New <---- New replace Old <-X-> Not interchangeable
<---> Interchangeable <-O-> Interchangeable with another part(s)
* Please place an order assy(*)

https://tractormanualz.com/

EH2-G191001

GLOW PLUG GROUP

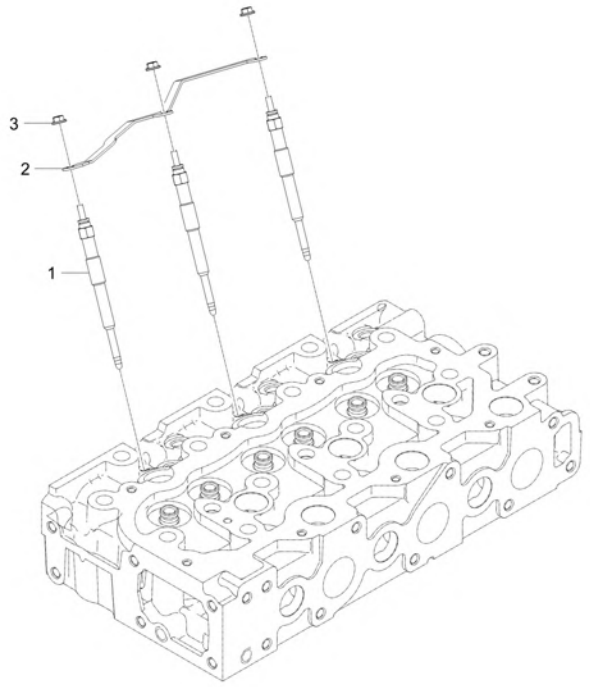

A : DK4510

No.	Part Number	Description	Qty A	Qty B	Qty C	Qty D	Qty E	I.C	Remark
1	F6800-65511	PLUG,GLOW	3						N
2	EH29-0001A	GLOW PLUG CORD	1						
3	02761-50040	NUT, FLANGE	3						

----> Old replace New
<---- New replace Old
<-X-> Not interchangeable
<---> Interchangeable
<-O-> Interchangeable with another part(s)
* Please place an order assy(*)

https://tractormanualz.com/

TD2-G117001

FUEL FILTER GROUP

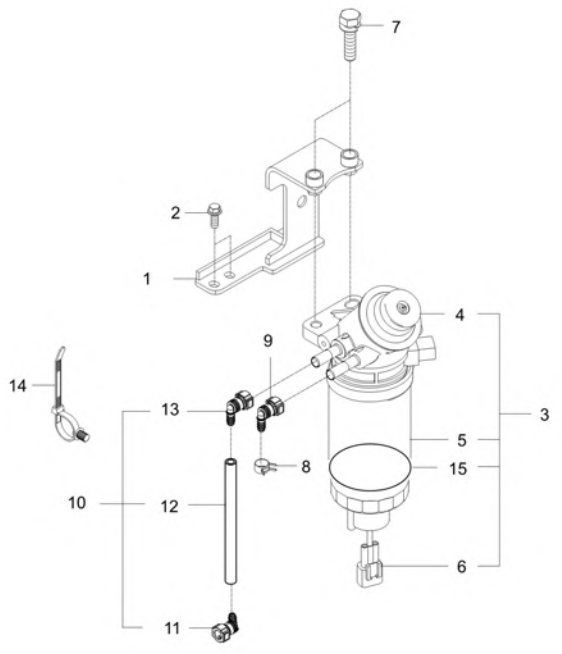

A : DK4510

No.	Part Number	Description	Qty A	Qty B	Qty C	Qty D	Qty E	I.C	Remark
1	EH25-0002A	SUPPORT, FUEL FILTER	1						
2	01123-50816	Hex Head Cap Screw	2						M8XP1.25
3	EH35-0006A	ASSY, MAIN FUEL FILTER	1						
4	EH35-0007A	ASSY HEAD	1						
5	EH35-0011A	FUEL FILTER	1						
6	F6800-16121	SENSOR, FUEL WATER	1						
7	01754-50845	BOLT, FLANGE	2						
8	09318-88140	CLMAP, HOSE	1						
9	EH25-0006A	CONNECTOR, QUICK-128-783-002	1						
10	EH25-0009A	ASSY HOSE, FUEL	1						
11	EH25-0007A	CONNECTOR, QUICK-226-308-000	1						
12	EH25-0010A	HOSE, FUEL	1						
13	EH25-0006A	CONNECTOR, QUICK-128-783-002	1						
14	T2198-82571	BAND CABLE	1						
15	EH35-0012A	O RING	1						

----> Old replace New
<---- New replace Old
<-X-> Not interchangeable
<---> Interchangeable
<-O-> Interchangeable with another part(s)
* Please place an order assy(*)

https://tractormanualz.com/

TD2-G113001

INTAKE PIPE GROUP

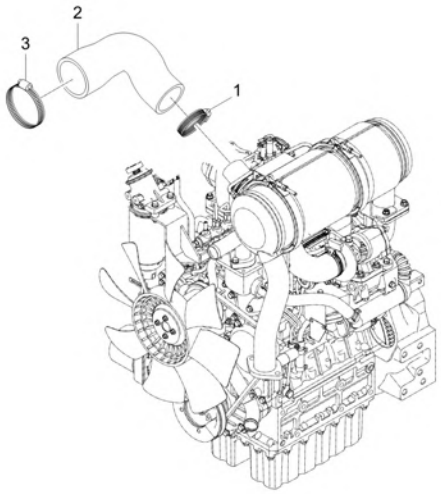

A : DK4510

No.	Part Number	Description	Qty A	Qty B	Qty C	Qty D	Qty E	I.C	Remark
1	E7300-72891	CLAMP, HOSE	1						DIA60스탠 60#
2	F5830-18951	HOSE 2, INTAKE	1						
3	E7300-11791	CLAMP, HOSE	1						DIA85스탠 85#

----> Old replace New
<---> Interchangeable
* Please place an order assy(*)
<---- New replace Old
<-O-> Interchangeable with another part(s)
<-X-> Not interchangeable

https://tractormanualz.com/

TD2-G112001

COOLING FAN GROUP

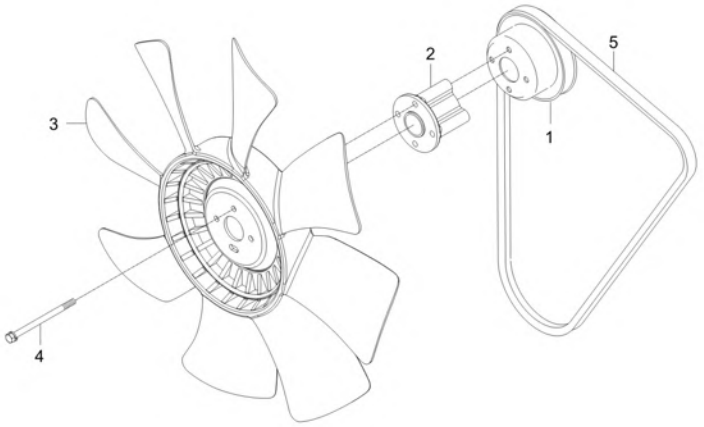

A : DK4510

No.	Part Number	Description	Qty A	Qty B	Qty C	Qty D	Qty E	I.C	Remark
1	E5616-74252ED	PULLEY, FAN	1						
2	E5850-74151	COLLAR,FAN	1						
3	E6520-74111	FAN, COOLING v	1						
4	01023-50680	BOLT v	4						
5	F6820-72531	FAN BELT	1						REC A. 43

----> Old replace New
<---- New replace Old
<-X-> Not interchangeable
<---> Interchangeable
<-O-> Interchangeable with another part(s)
* Please place an order assy(*)

https://tractormanualz.com/

TD2-G115001

AFTERTREATMENT GROUP

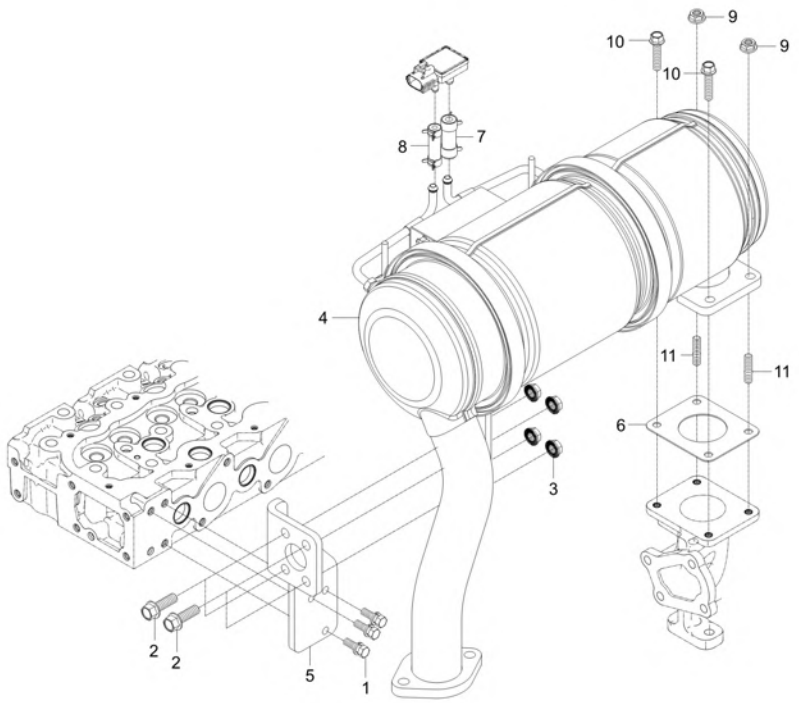

A : DK4510

No.	Part Number	Description	Qty A	Qty B	Qty C	Qty D	Qty E	I.C	Remark
1	01123-50822	WASHER BOLT	3						M8XP1.25
2	01133-51032	BOLT	4						M10*P1.25
3	02783-50100	FLANGE NUT	4						M10XP1.25
4	F5830-25101	CCRT ASSY	1						N
5	F5830-25423	BRACKET	1						T=8.0
6	F6800-12371	GASKET, TURBOCHARGER FLANGE	1						
7	F6800-26661	TUBE, 1	1						
8	F6800-26671	TUBE, 2	1						
9	F6800-91911	U-NUT	2						-
10	F6800-92411	FLANGEBOLT	2						M8x1.25 25mm
11	F6800-92441	BOLT, STUD	2						

----> Old replace New
<---- New replace Old
<-X-> Not interchangeable
<---> Interchangeable
<-O-> Interchangeable with another part(s)
* Please place an order assy(*)

https://tractormanualz.com/

TD2-G118004

MANUFACTURING LABEL GROUP

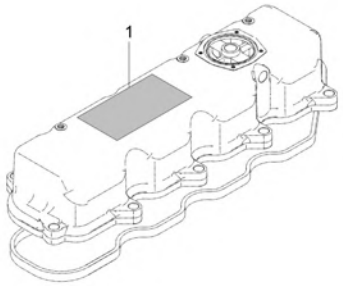

A : DK4510

No.	Part Number	Description	Qty A	Qty B	Qty C	Qty D	Qty E	I.C	Remark
1	EH28-0008A	LABEL, EPA CERTIFICATE(45HP)	1 VR7600177 ~ VR7600306						
1	EH28-0008B	LABEL, EPA CERTIFICATE(45HP)	1 WR7600001 ~ WR7600104					<------	
1	EH28-0008C	LABEL, EPA CERTIFICATE(45HP)	1					<------	

----> Old replace New
<---- New replace Old
<-X-> Not interchangeable
<---> Interchangeable
<-O-> Interchangeable with another part(s)
* Please place an order assy(*)

https://tractormanualz.com/

TD2-G119001

ECU GROUP

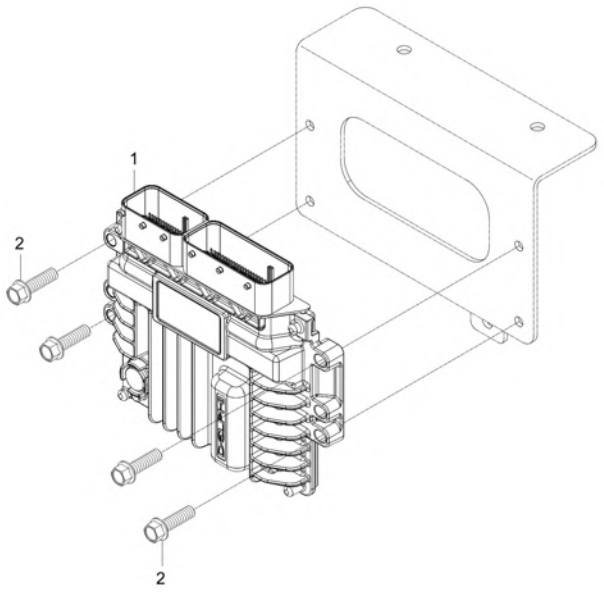

A : DK4510

No.	Part Number	Description	Qty A	Qty B	Qty C	Qty D	Qty E	I.C	Remark
1	F6800-26102	333...ENG ECU T4 -Need Program v	1						
1	EH39-0001A	050 - CONTROLLER, ENGINE dnr v	1					<----->	
2	01754-50625	BOLT, FLANGE	6						7T

----> Old replace New
<---> Interchangeable
* Please place an order assy(*)
<---- New replace Old
<-O-> Interchangeable with another part(s)
<-X-> Not interchangeable

https://tractormanualz.com/

TD2-G222002

CLUTCH HOUSING GROUP

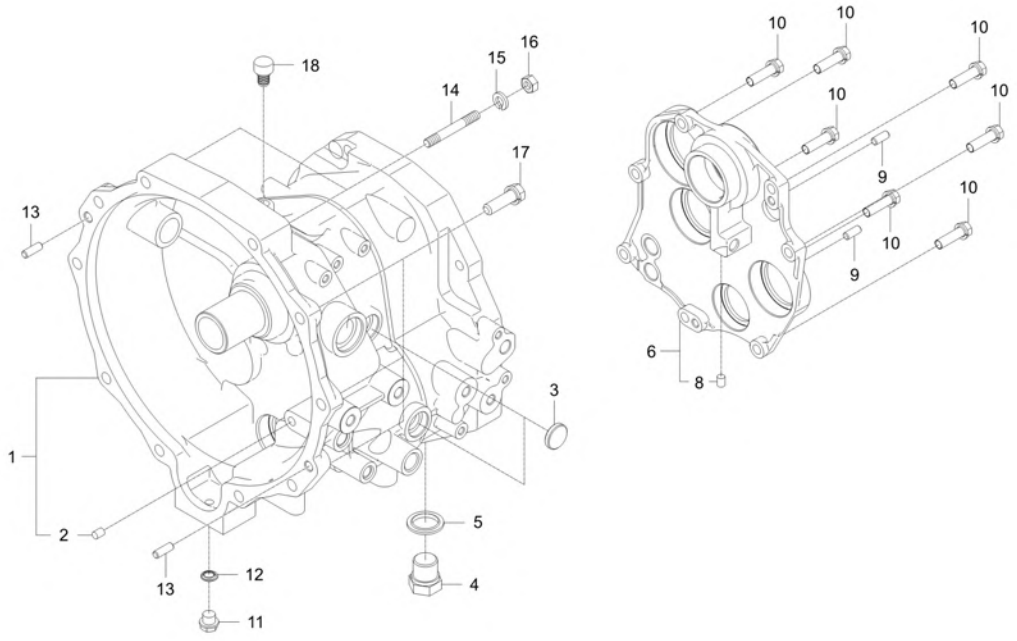

A : DK4510

No.	Part Number	Description	Qty A	Qty B	Qty C	Qty D	Qty E	I.C	Remark
1	T5715-14112	HOUSING, CLUTCH	1						
1	T5715-14113	HOUSING, CLUTCH	1					<------	
1	T5715-14114	HOUSING, CLUTCH	1					<----->	
2	06350-01012	PLUG	1						DIA10
3	T4520-14872	CAP SEAL	2						
4	06311-55060	PLUG v	1						
5	04717-02650	WASHER, SEAL	1						
6	T5715-14121	COVER, BEARING	1						
8	06350-00506	PLUG	1						
9	05012-00818	PIN, PARALLEL	2						
10	01133-51035	WASHER BOLT	7						M10X1.25
11	06331-45010	PLUG v	1						M10*1.25
12	04717-01000	WASHER, SEAL	1						M10
13	05012-01020	PIN, STRAIGHT	2						
14	01574-51265	STUD	2						M12*1.25*65
15	04512-50120	SPRING WASHER	2						M12
16	02176-50120	NUT	2						M12XP1.25
17	01177-51240	BOLT v	8						M12XP1.25 (9T/스프

----> Old replace New
<---- New replace Old
<-X-> Not interchangeable
<---> Interchangeable
<-O-> Interchangeable with another part(s)
* Please place an order assy(*)

https://tractormanualz.com/

TD2-G222002

CLUTCH HOUSING GROUP

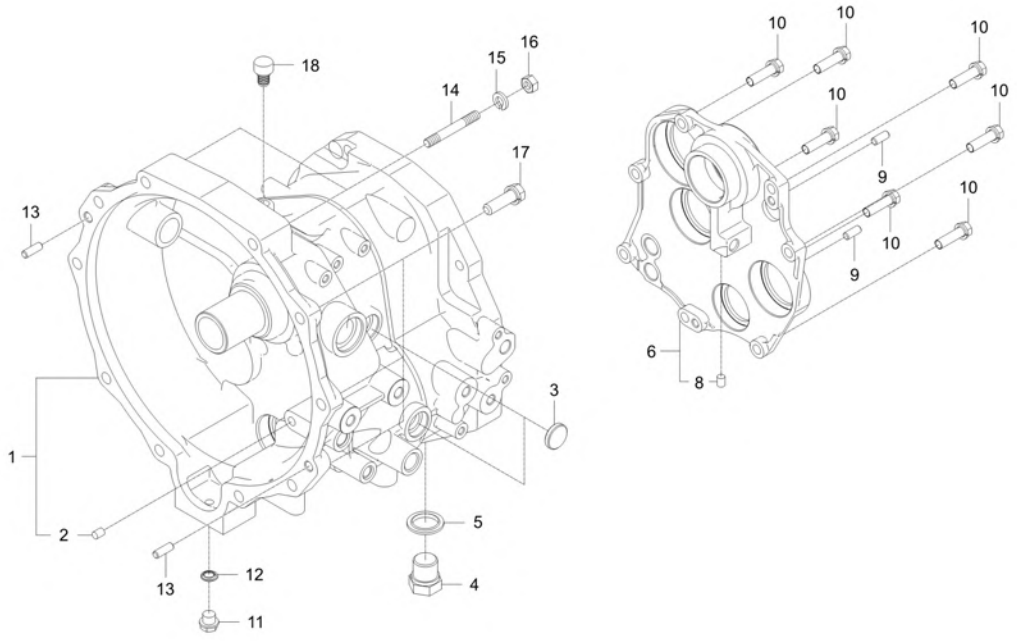

A : DK4510

No.	Part Number	Description	Qty A	Qty B	Qty C	Qty D	Qty E	I.C	Remark
18	T2305-43883	PLUG v	1						

----> Old replace New
<----> Interchangeable
* Please place an order assy(*)
<---- New replace Old
<-O-> Interchangeable with another part(s)
<-X-> Not interchangeable

https://tractormanualz.com/

TD2-G211001

CLUTCH GROUP

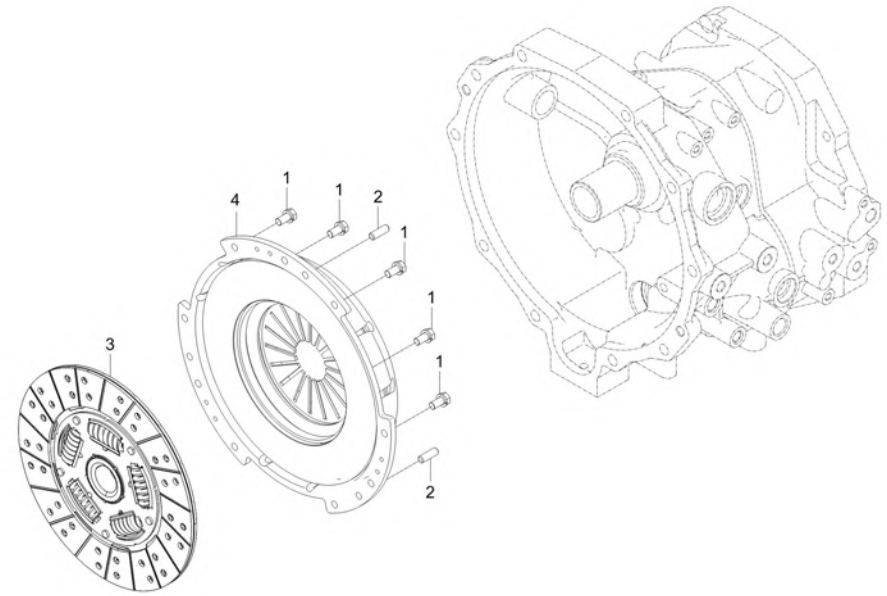

A : DK4510

No.	Part Number	Description	Qty A	Qty B	Qty C	Qty D	Qty E	I.C	Remark
1	01123-50816	Hex Head Cap Screw	9						M8XP1.25
2	05012-00822	PIN, STRAIGHT v	3						
3	T2610-14303	COMP DISK,CLUTCH v	1						
4	T4620-14503	ASSY CLUTCH COVER	1						

----> Old replace New
<---- New replace Old
<-X-> Not interchangeable
<---> Interchangeable
<-O-> Interchangeable with another part(s)
* Please place an order assy(*)

https://tractormanualz.com/

TD2-G212001

CLUTCH RELEASE GROUP

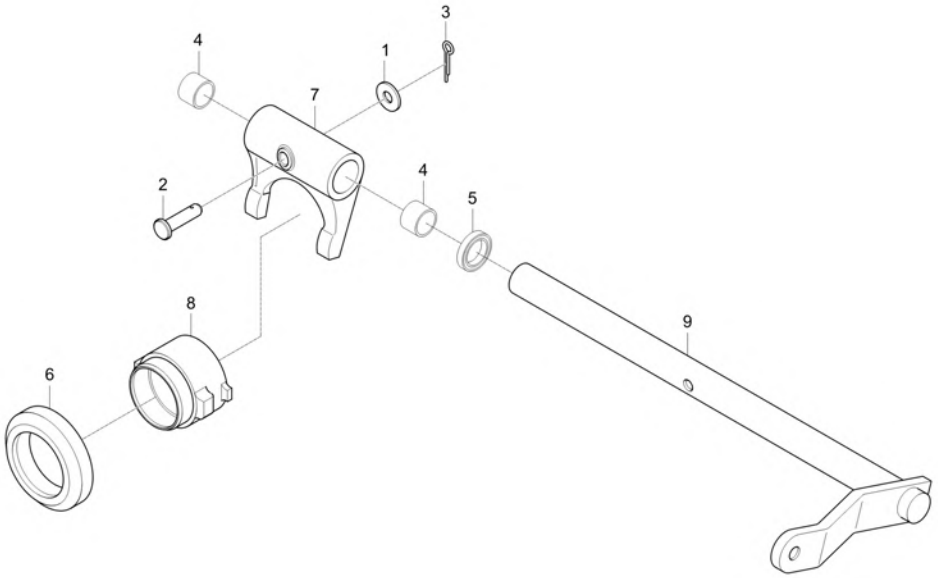

A : DK4510

No.	Part Number	Description	Qty A	Qty B	Qty C	Qty D	Qty E	I.C	Remark
1	04012-50080	WASHER, PLAIN	1						M8
2	05112-50850	Pin Joint	1						
3	05511-50220	PIN, SPLIT	1						DIA1.8XL20
4	08511-02525	BUSH v	2						MB2525DU
5	09500-25388	SEAL, OIL	1						
6	T2610-14831	BEARING, RELEASE v	1						RCT5582RU KOYO
7	T5210-14721	FORK	1						
8	T5210-14812	HUB CLUTCH RELEASE v	1						
9	T5715-14711	LEVER	1						

----> Old replace New
<---- New replace Old
<-X-> Not interchangeable
<---> Interchangeable
<-O-> Interchangeable with another part(s)
* Please place an order assy(*)

https://tractormanualz.com/

TD2-G222005

CLUTCH HOUSING GROUP

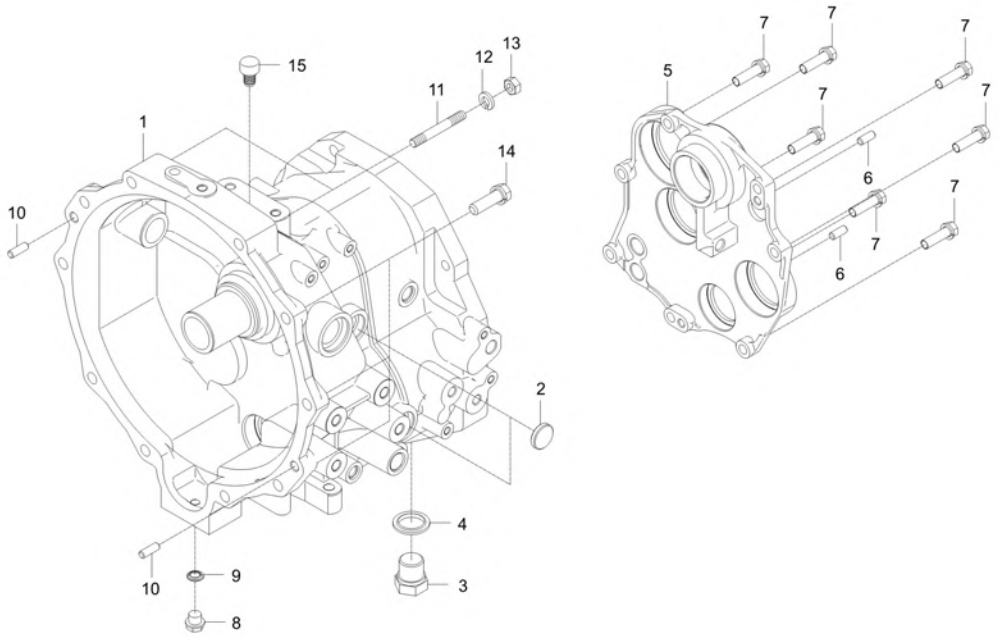

A : DK4510

No.	Part Number	Description	Qty A	Qty B	Qty C	Qty D	Qty E	I.C	Remark
1	TD22-0108A	HOUSING, CLUTCH	1						
2	T4520-14872	CAP SEAL	2						
3	06311-55060	PLUG v	1						
4	04717-02650	WASHER, SEAL	1						
5	T5715-14121	COVER, BEARING	1						
6	05012-00818	PIN, PARALLEL	2						
7	01133-51035	WASHER BOLT	7						M10X1.25
8	06331-45010	PLUG v	1						M10*1.25
9	04717-01000	WASHER, SEAL	1						M10
10	05012-01020	PIN, STRAIGHT	2						
11	01574-51265	STUD	2						M12*1.25*65
12	04512-50120	SPRING WASHER	2						M12
13	02176-50120	NUT	2						M12XP1.25
14	01177-51240	BOLT v	8						M12XP1.25 (9T/스프
15	T2305-43883	PLUG v	1						

----> Old replace New
<---- New replace Old
<-X-> Not interchangeable
<---> Interchangeable
<-O-> Interchangeable with another part(s)
* Please place an order assy(*)

https://tractormanualz.com/

TD2-G223001

MID CASE GROUP

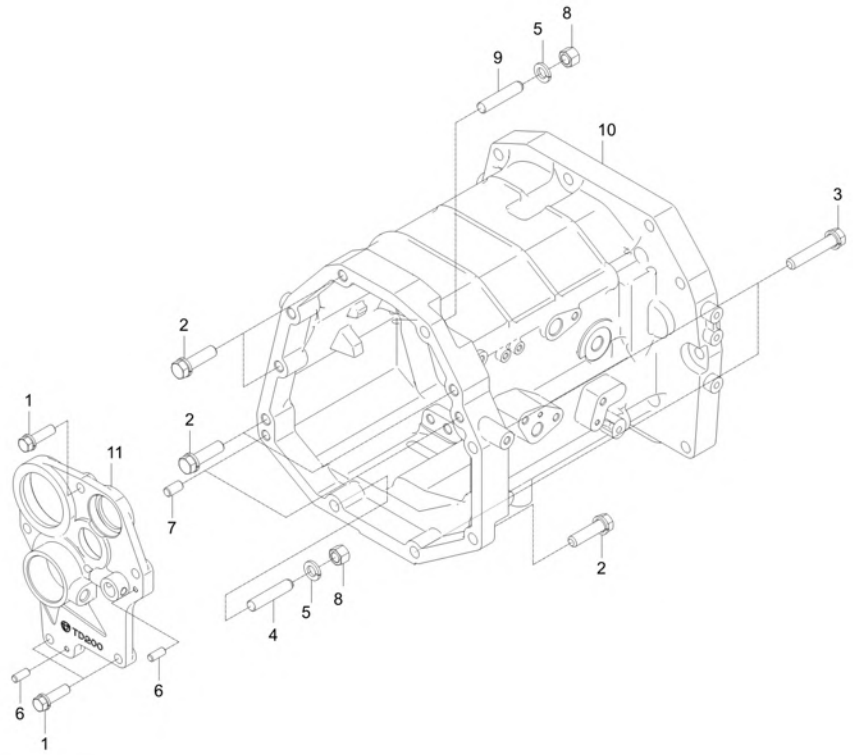

A : DK4510

No.	Part Number	Description	Qty A	Qty B	Qty C	Qty D	Qty E	I.C	Remark
1	01133-51035	WASHER BOLT	5						M10X1.25
2	01133-51245	BOLT	6						
2	01177-51245	WITH_WASHER_BOLT	6					<------	M12XP1.25
3	01133-51265	BOLT	2						M12XP1.25
3	01177-51265	BOLT	2					<------	M12XP1.25 (9T/스프
4	01574-51260	STUD	1						M12*1.25*60
5	04512-50120	SPRING WASHER	2						M12
6	05012-00818	PIN, PARALLEL	2						
7	05012-01018	PIN, STRAIGHT	2						
8	T4240-14081	NUT	2						
9	T4620-21481	STUD	1						
10	T5710-21153	TRK CASE, MIDDLE	1						
11	T5715-21442	COVER, BEARING	1 ~ SR7600018						
11	T5715-21443	COVER, BEARING	1 SR7600019 ~ SR7600103					<------	
11	T5715-21444	COVER, BEARING	1 SR7600104 ~ TR7600120					<----->	
11	T5715-21445	COVER, BEARING	1 TR7600121 ~					<----->	

----> Old replace New
<---- New replace Old
<-X-> Not interchangeable
<---> Interchangeable
<-O-> Interchangeable with another part(s)
* Please place an order assy(*)

https://tractormanualz.com/

TD2-G224004

TRANSMISSION CASE GROUP

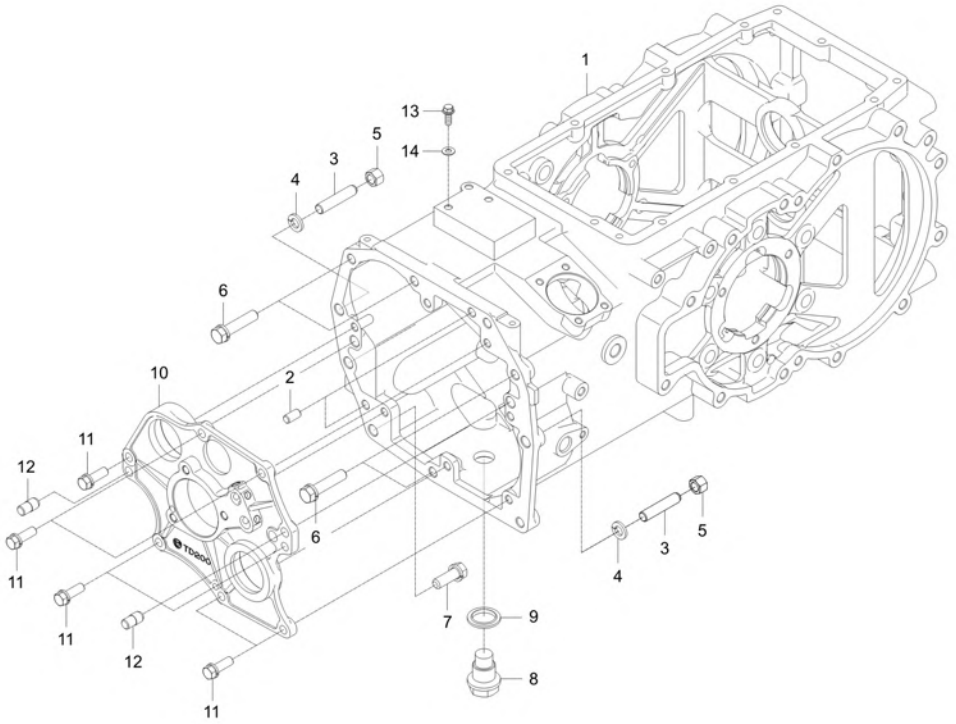

A : DK4510

No.	Part Number	Description	Qty A	Qty B	Qty C	Qty D	Qty E	I.C	Remark
1	TD22-0085A	CASE, T/M	1						
2	05012-01018	PIN, STRAIGHT	2						
3	T4620-21481	STUD	2						
4	04512-50120	SPRING WASHER	2						M12
5	T4240-14081	NUT	2						
6	01177-51255	BOLT	6						M12XP1.25 (9T/스프
7	01177-51235	BOLT v	2						M12XP1.25 (9T/스프
8	T4125-14261	PLUG	1						
9	04717-02650	WASHER, SEAL	1						
10	T5715-21471	COVER, BEARING	1						
11	01133-51030	WITH WASHER BOLT	7						M10XP1.25
12	37305-2817-1	STRAIGHT PIN	2						
13	01754-50816	BOLT, FLANGE	1						M8XP1.25
14	04717-00800	WASHER, SEAL	1						M8

----> Old replace New
<---- New replace Old
<-X-> Not interchangeable
<---> Interchangeable
<-O-> Interchangeable with another part(s)
* Please place an order assy(*)

https://tractormanualz.com/

TD2-G232001

DRIVE SHAFT GROUP

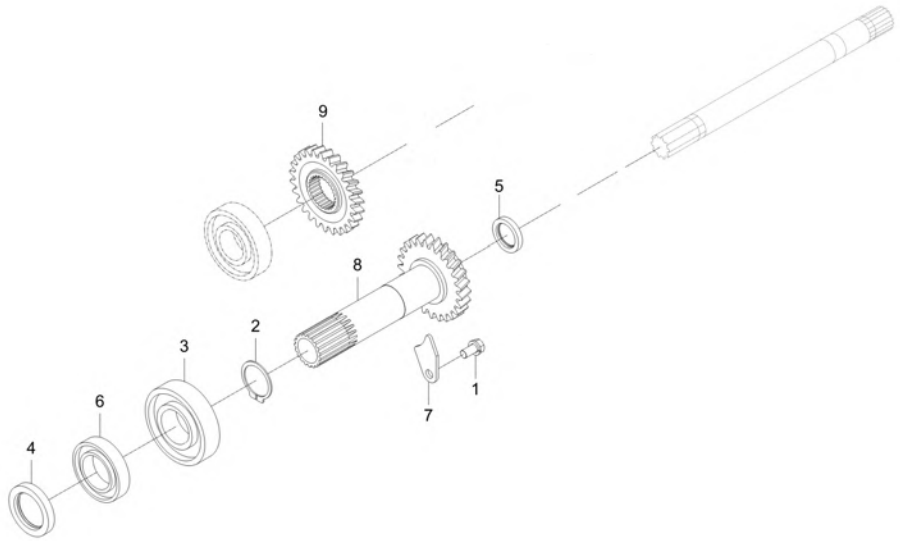

A : DK4510

No.	Part Number	Description	Qty A	Qty B	Qty C	Qty D	Qty E	I.C	Remark
1	01123-50816	Hex Head Cap Screw	1						M8XP1.25
2	04612-00350	CIR CLIP, EXTERNAL	1						
3	08101-06307	BEARING, BALL	1						#6307
4	09500-35528	SEAL,OIL	1						TC35*52*8
5	T2440-21361	SEAL, OIL	1						
6	T2555-06007	BALL BEARING	1						#6007, GMB CHINA
7	T4710-22242	PLATE, FIXED	1						
8	T5715-21511	SHAFT, GEAR 25	1						
9	T5715-21551	GEAR 26	1						

----> Old replace New
<---- New replace Old
<-X-> Not interchangeable
<---> Interchangeable
<-O-> Interchangeable with another part(s)
* Please place an order assy(*)

https://tractormanualz.com/

TD2-G241001

MAIN SHIFT SHAFT GROUP

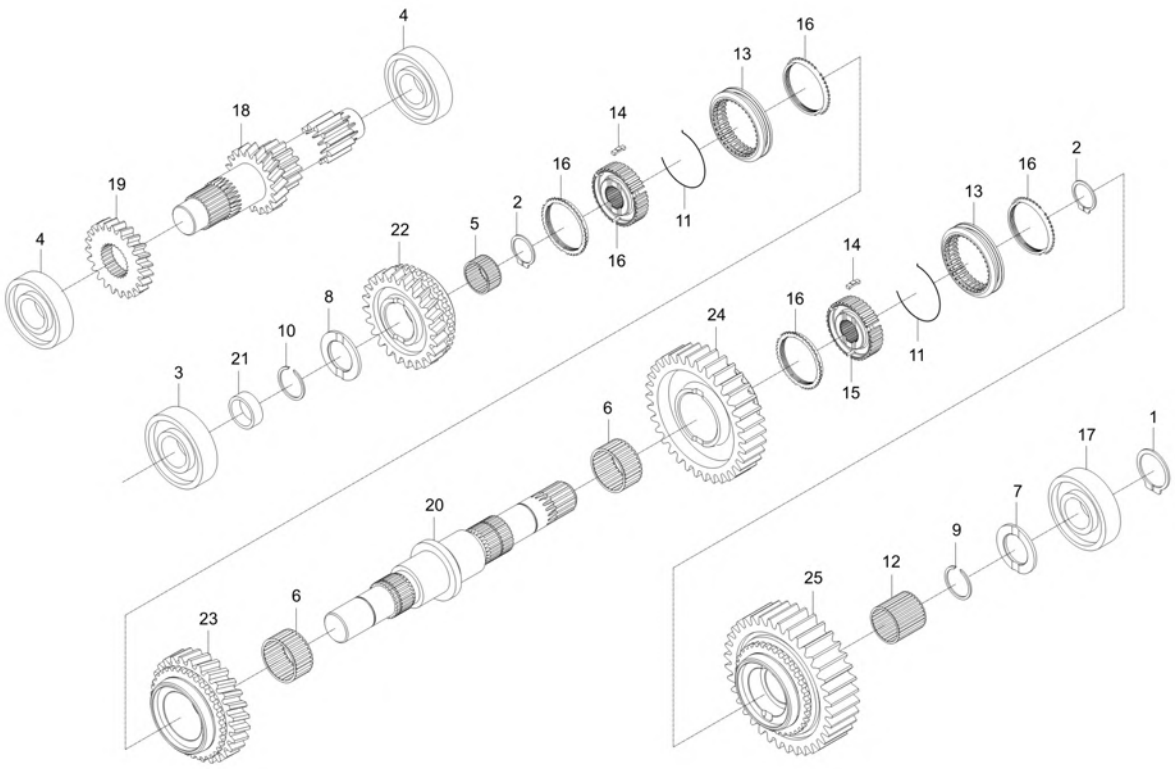

A : DK4510

No.	Part Number	Description	Qty A	Qty B	Qty C	Qty D	Qty E	I.C	Remark
1	04612-00250	CIR-CLIP	1						
2	04612-00300	SNAP RING	2						
3	08101-06305	BEARING,BALL v	1						DIA25
4	08101-06306	BEARING, BALL	2						#6306
5	08822-53020	BEARING, NEEDLE	1						NTN K253020S
6	08823-54027	BEARING,NEEDLE v	2						NTN,K354027
7	37150-2176-1	COLLAR, THRUST	1						T3.2*47*47
8	37150-2176-1	COLLAR, THRUST	1						T3.2*47*47
9	37150-2179-1	SNAP RING	1						T1.2
10	37150-2179-1	SNAP RING	1						T1.2
11	38360-2178-1	SYNCHRONIZER SPRING	4						DIA1.2
12	T2555-53025	BEARING, NIDDLE	1						25x30x25, GMB CHINA
13	T2610-21754	SHIFTER	2						
14	T2610-21812	SYNCHRONIZER KEY	6						
15	T4115-21771	GEAR	2						
16	T4240-21792	RING, SYNCHRONIZER	4						
17	T5210-96305	BALL BEARING	1						HC6305T2
18	T5715-21531	GEAR,MAIN SHAFT	1						

----> Old replace New
<---- New replace Old
<-X-> Not interchangeable
<---> Interchangeable
<-O-> Interchangeable with another part(s)
* Please place an order assy(*)

https://tractormanualz.com/

TD2-G241001

MAIN SHIFT SHAFT GROUP

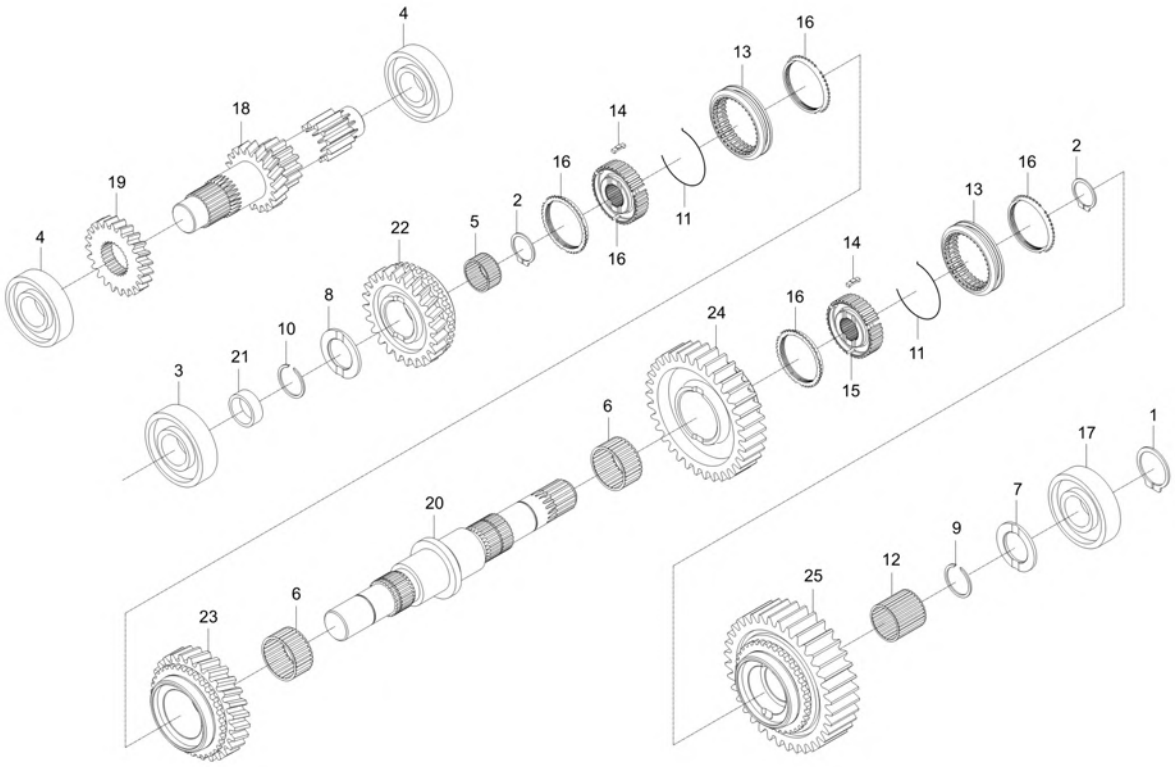

A : DK4510

No.	Part Number	Description	Qty A	Qty B	Qty C	Qty D	Qty E	I.C	Remark
19	T5715-21561	GEAR,23	1						
20	T5715-21612	SHAFT, COUNTER	1						
21	T5715-21631	BUSHING	1						
22	T5715-21711	GEAR 24	1						
23	T5715-21721	GEAR,27	1						
24	T5715-21732	GEAR, SPUR 34	1						
25	T5715-21741	GEAR,SPUR 36	1						

----> Old replace New
<----> Interchangeable
* Please place an order assy(*)
<---- New replace Old
<-O-> Interchangeable with another part(s)
<-X-> Not interchangeable

https://tractormanualz.com/

TD2-G242001

MAIN SHIFT FORK GROUP

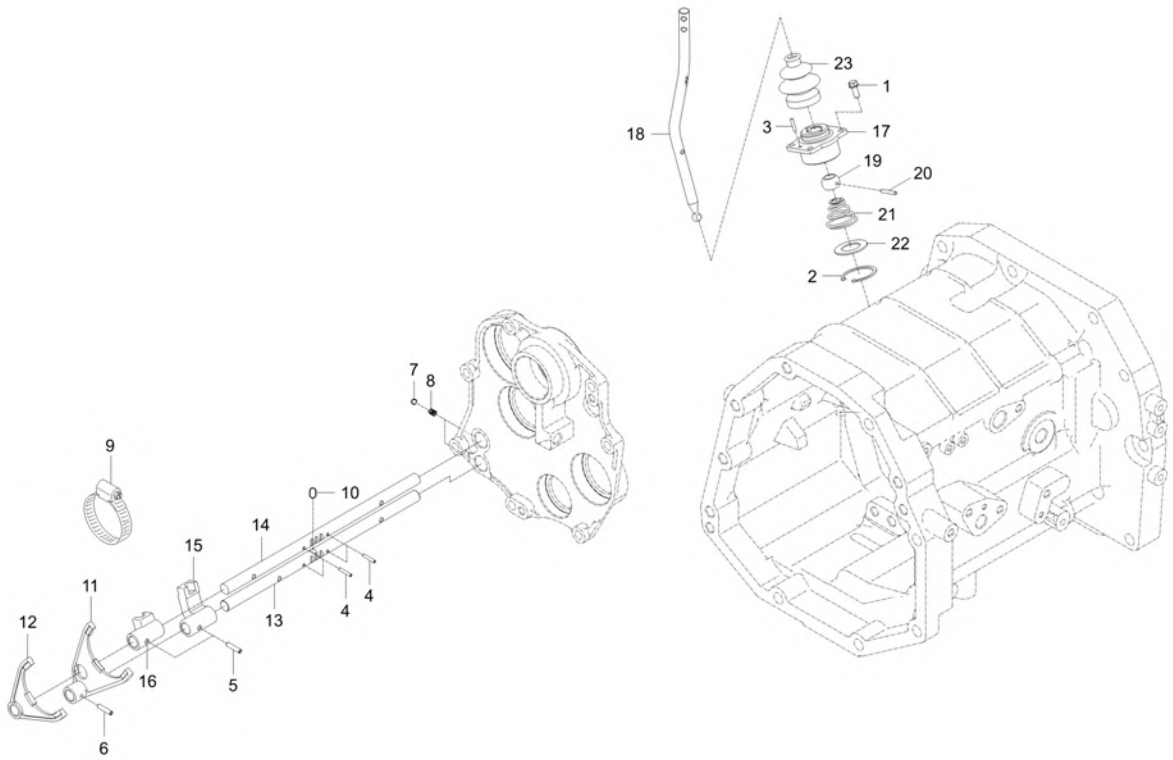

A : DK4510

No.	Part Number	Description	Qty A	Qty B	Qty C	Qty D	Qty E	I.C	Remark
1	01123-50820	BOLT, WASHER v	4						M8XP1.25
2	04611-00520	SNAP RING	1						
3	05411-00412	OB PIN,SPRING	1						
4	05411-00425	PIN, SPRING	4						
5	05411-00628	PIN, SPRING	2						
6	05411-00628	PIN, SPRING	2						
7	07715-01605	BALL,STEEL	2						5/16"
8	62331-1853-2	SPRING	2						DIA1.4
9	E7300-11781	CLAMP, HOSE	1						DIA65스탠 65#
10	T4810-21283	PIN	1						
11	T5715-21211	FORK	1						
12	T5715-21221	FORK	1						
13	T5715-21241	FORK ROD	1						
14	T5715-21251	FORK ROD	1						
15	T5715-21261	CONNECT FORK 1,2	1						
16	T5715-21271	CONNECT FORK 3,4	1						
17	T5715-21312	COVER, MAIN SHIFT	1						
17	T5715-21313	COVER, MAIN SHIFT	1					<------	

----> Old replace New
<---- New replace Old
<-X-> Not interchangeable
<---> Interchangeable
<-O-> Interchangeable with another part(s)
* Please place an order assy(*)

https://tractormanualz.com/

TD2-G242001

MAIN SHIFT FORK GROUP

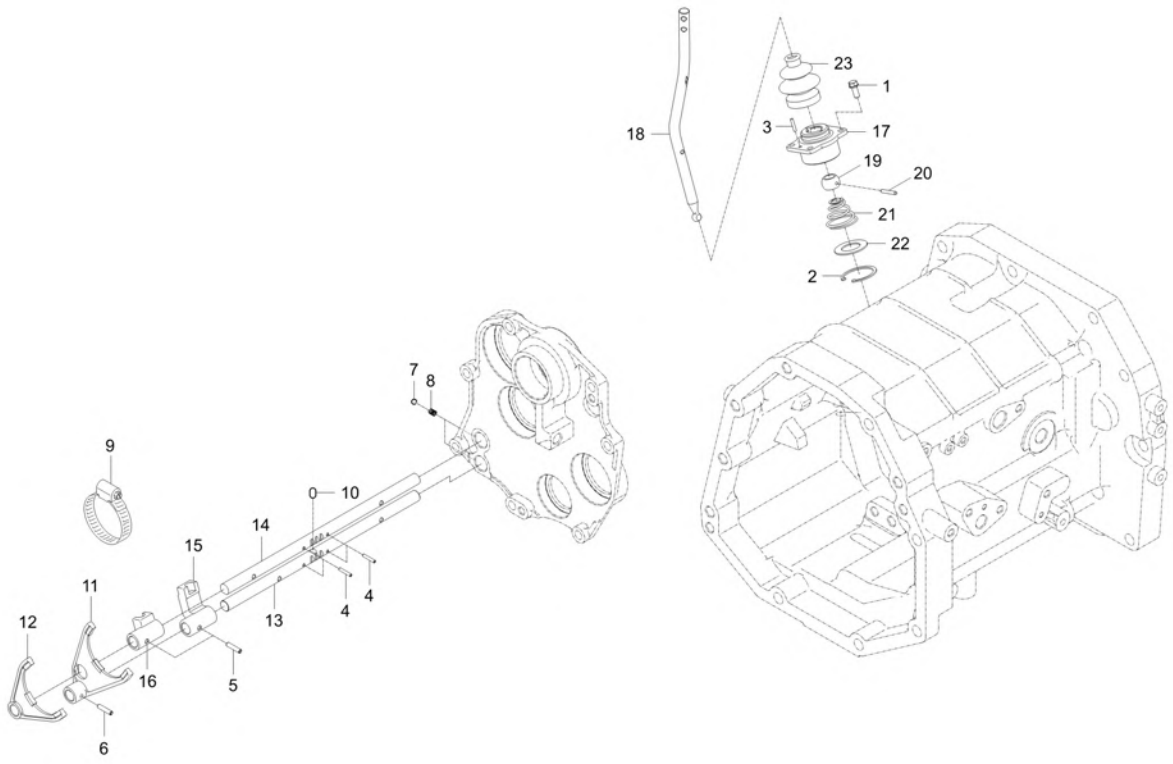

A : DK4510

No.	Part Number	Description	Qty A	Qty B	Qty C	Qty D	Qty E	I.C	Remark
18	T5715-21322	LEVER, MAIN SHIFT	1						
18	T5715-21323	LEVER, MAIN SHIFT v	1					<----->	
19	T5715-21331	BALL	1						
20	T5715-21341	PIN	1						
20	T5715-21342	PIN dnr v	1					<----->	
21	T5715-21361	SPRING,CONE	1						
22	T5715-21371	WASHER	1						
22	T5715-21372	Washer, Plain	1					<------	
23	T5715-21382	JABARA dnr v	1						
23	T5715-21383	JABARA v	1					<------	

----> Old replace New
<---- New replace Old
<-X-> Not interchangeable
<---> Interchangeable
<-O-> Interchangeable with another part(s)
* Please place an order assy(*)

https://tractormanualz.com/

TD2-G251001

SHUTTLE SHAFT GROUP

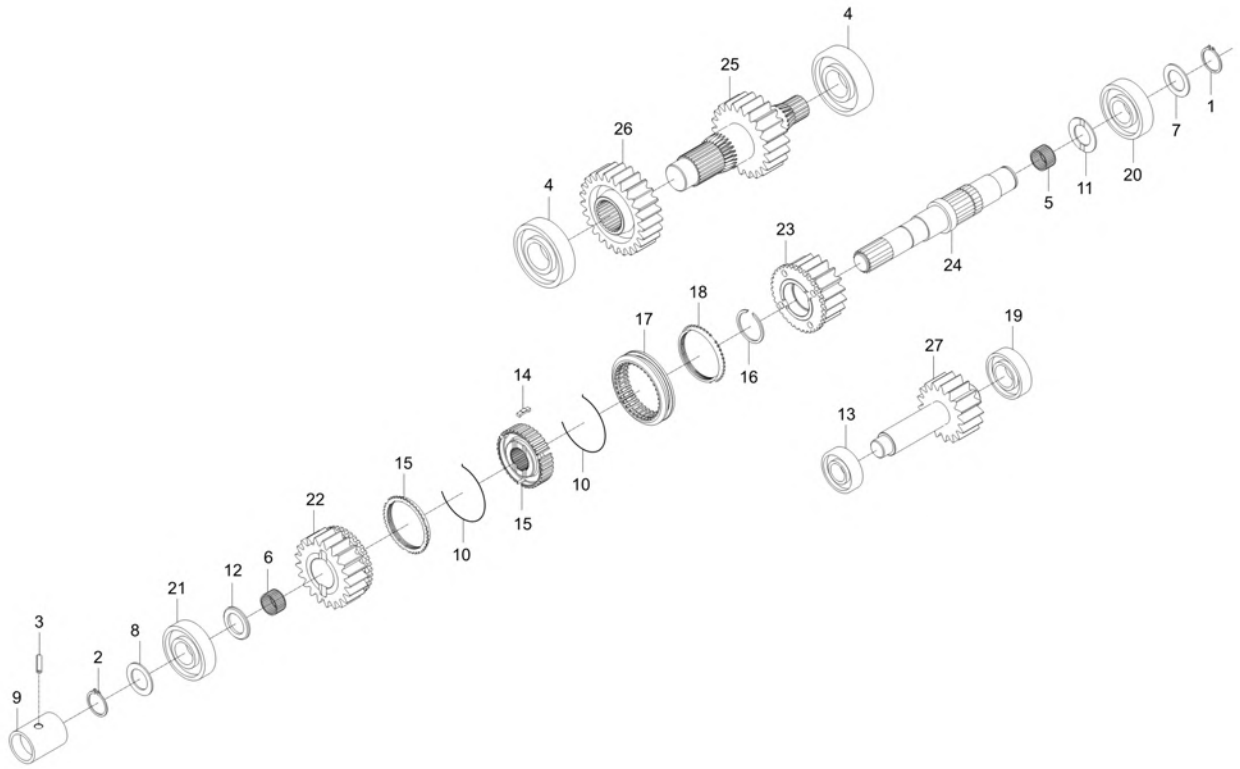

A : DK4510

No.	Part Number	Description	Qty A	Qty B	Qty C	Qty D	Qty E	I.C	Remark
1	04612-00250	CIR-CLIP	1						
2	04612-00250	CIR-CLIP	1						
3	05411-00635	PIN, SPRING	1						DIA5*36
4	08101-06306	BEARING, BALL	2						#6306
5	08822-83327	BEARING,NEEDLE v	1						
6	08822-83327	BEARING,NEEDLE v	1						
7	34150-2156-1	COLLAR	1						T2*42*42
8	34150-2156-1	COLLAR	1						T2*42*42
9	37805-4452-1	COUPLING	1						
10	38360-2178-1	SYNCHRONIZER SPRING	2						DIA1.2
11	T2305-21762	COLLAR, THRUST v	1						
12	T2305-21762	COLLAR, THRUST v	1						
13	T2555-06204	BALL BEARING	1						#6204, GMB CHINA
14	T2610-21812	SYNCHRONIZER KEY	3						
15	T2610-22812	HUB,SPLINE	1						
16	T2610-22821	RING,SNAP	1						
17	T2610-22834	SHIFTER	1						
18	T2610-22851	ASSY,SYNCHRO dnr v	2						

----> Old replace New
<----> Interchangeable
* Please place an order assy(*)
<---- New replace Old
<-O-> Interchangeable with another part(s)
<-X-> Not interchangeable

https://tractormanualz.com/

TD2-G251001

SHUTTLE SHAFT GROUP

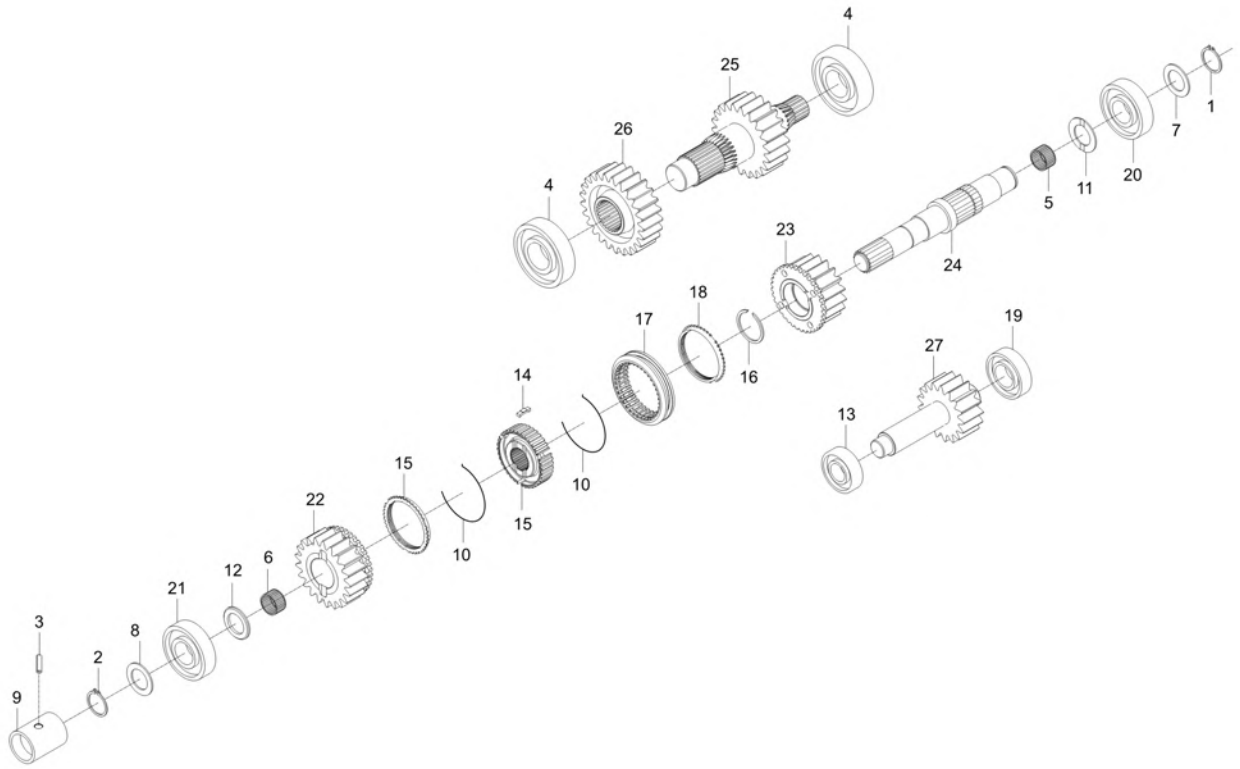

A : DK4510

No.	Part Number	Description	Qty A	Qty B	Qty C	Qty D	Qty E	I.C	Remark
19	T2610-24131	OB BEARING,BALL	1						6205R
20	T5210-96305	BALL BEARING	1						HC6305T2
21	T5210-96305	BALL BEARING	1						HC6305T2
22	T5715-22612	GEAR 21	1						
23	T5715-22622	GEAR 18	1						
24	T5715-22631	SHAFT, SHUTTLE	1						
25	T5715-22641	SHAFT, 22 GEAR	1						
26	T5715-22651	GEAR, 25	1						
27	T5715-22721	SHAFT,GEAR 17	1						

----> Old replace New
<---- New replace Old
<-X-> Not interchangeable
<---> Interchangeable
<-O-> Interchangeable with another part(s)
* Please place an order assy(*)

https://tractormanualz.com/

TD2-G252001

SHUTTLE SHIFT FORK GROUP

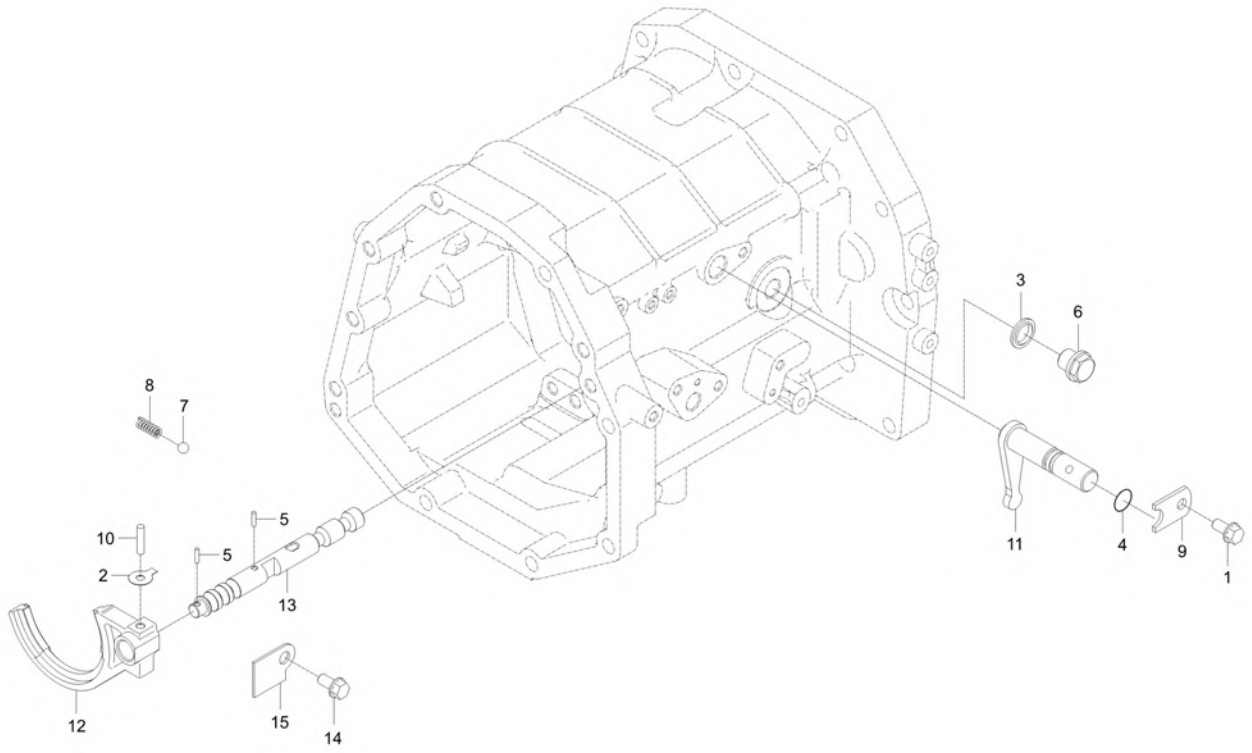

A : DK4510

No.	Part Number	Description	Qty A	Qty B	Qty C	Qty D	Qty E	I.C	Remark
1	01754-50816	BOLT, FLANGE	1						M8XP1.25
2	04111-50060	WASHER v	1						
3	04717-01600	WASHER, SEAL	1						
4	04811-00140	O RING	1						
5	05411-00425	PIN, SPRING	2						
6	06331-45016	PLUG M16 P 1.25	1						M16P1.5
7	07715-01605	BALL,STEEL	1						5/16"
8	62331-1853-2	SPRING	1						DIA1.4
9	T2555-23331	STOPPER	1						
10	T2610-22171	BOLT	1 ~ TR7600120						
10	05411-00635	PIN, SPRING	1 TR7600121 ~					<--O-->	DIA5*36
11	T5715-22121	ARM, SHIFT SHUTTLE	1						
12	T5715-22153	FORK, SHIFT SHUTTLE v	1 ~ TR7600120						
12	T5715-22154	FORK, SHIFT (SHUTTLE)	1 TR7600121 ~					<--O-->	
13	T5715-22161	ROD, FORK SHUTTLE dnr v	1 ~ TR7600120						
13	T5715-22162	ROD, FORK SHUTTLE v	1 TR7600121 ~					<--O-->	
14	01133-51016	BOLT	1						M10*P1.25
15	TD22-0001A	STOPPER	1						

----> Old replace New
<---- New replace Old
<-X-> Not interchangeable
<---> Interchangeable
<-O-> Interchangeable with another part(s)
* Please place an order assy(*)

https://tractormanualz.com/

TD2-G271002

RANGE SHIFT SHAFT GROUP

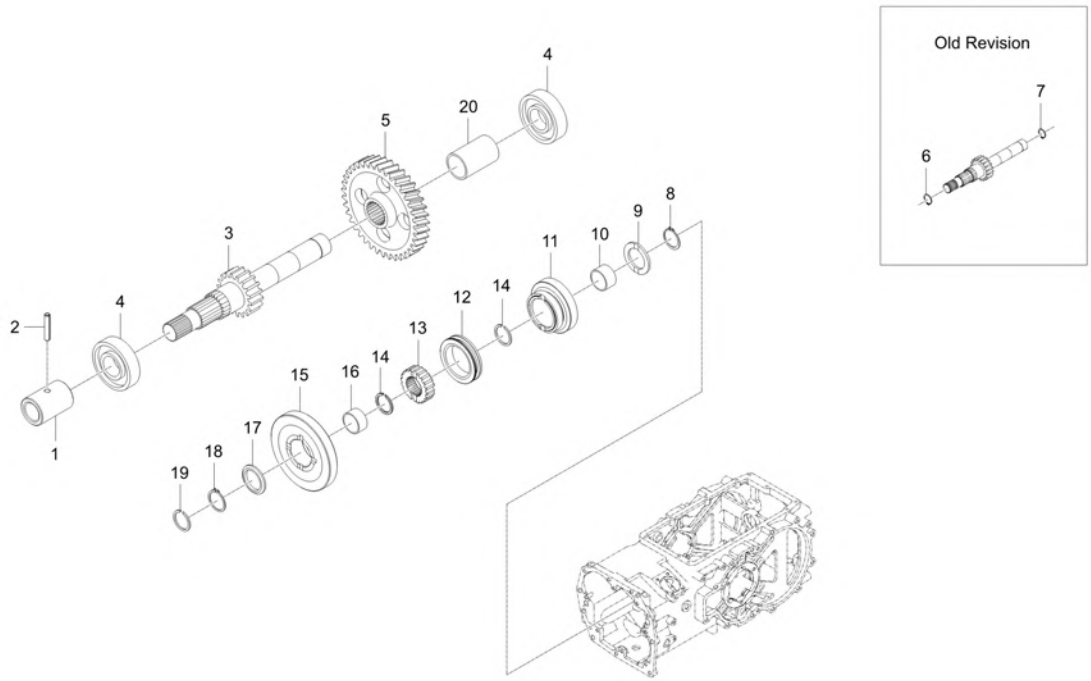

A : DK4510

No.	Part Number	Description	Qty A	Qty B	Qty C	Qty D	Qty E	I.C	Remark
1	37805-4452-1	COUPLING	1						
2	05411-00635	PIN, SPRING	1						DIA5*36
3	T5715-23311	SHAFT, 18 GEAR	1						
3	T5715-23312	SHAFT, 18 GEAR	1					<------	
3	T5715-23313	SHAFT, 18 GEAR	1					<------	
4	08101-06305	BEARING,BALL v	2						DIA25
5	T5715-23321	GEAR,35	1						
6	04612-00300	SNAP RING	1						
7	04612-00250	CIR-CLIP	1						
8	04612-00320	RING SNAP	1						
9	T2610-23621	COLLAR,THRUST	1						
10	08823-23727	BEARING NEEDLE	1						K32*37*27F
11	T5715-23381	GEAR 18	1						
12	38430-2175-1	SHIFT	1						
13	T5715-23371	BOSS,SPLINE	1						
14	38430-2554-1	RING, SNAP	2						
15	T5715-23361	GEAR 36	1						
16	08822-83327	BEARING,NEEDLE v	1						

----> Old replace New
<---> Interchangeable
* Please place an order assy(*)
<---- New replace Old
<-O-> Interchangeable with another part(s)
<-X-> Not interchangeable

https://tractormanualz.com/

TD2-G271002

RANGE SHIFT SHAFT GROUP

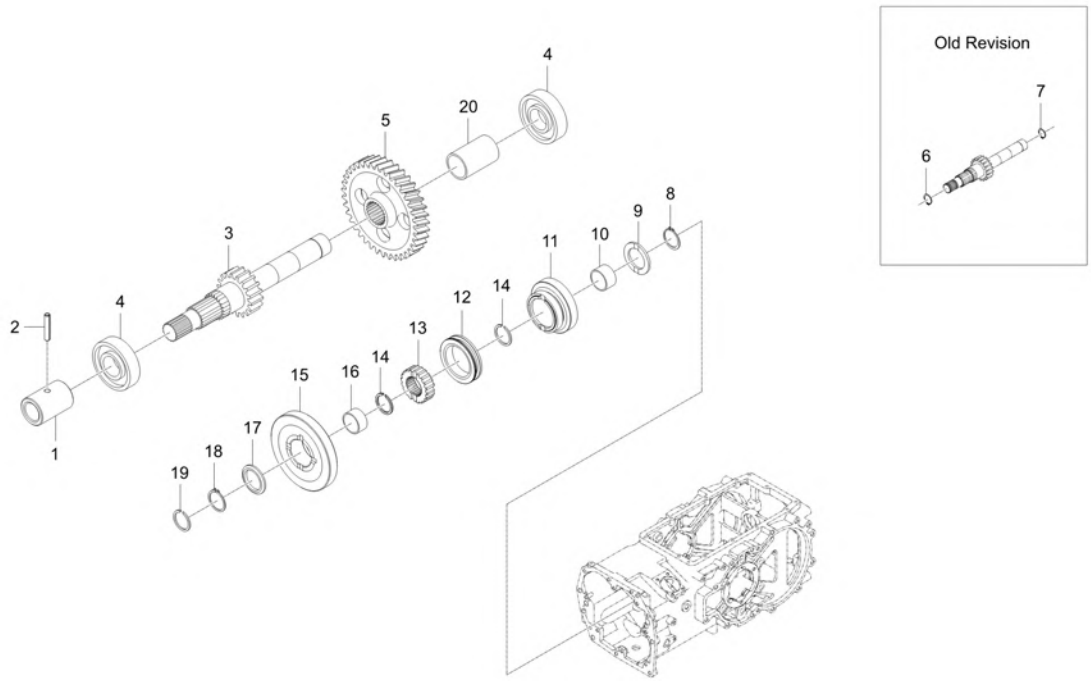

A : DK4510

No.	Part Number	Description	Qty A	Qty B	Qty C	Qty D	Qty E	I.C	Remark
17	T2610-23681	COLLAR,THRUST	1						
18	04612-00280	SNAP RING	1						
19	T2610-14541	CIR-CLIP	1						T1.5 28
20	38455-2314-1	WASHER	1						
20	TD22-0129A	SPACER	1					<------	

----> Old replace New
<---- New replace Old
<-X-> Not interchangeable
<---> Interchangeable
<-O-> Interchangeable with another part(s)
* Please place an order assy(*)

https://tractormanualz.com/

TD2-G272002

RANGE SHIFT FORK GROUP

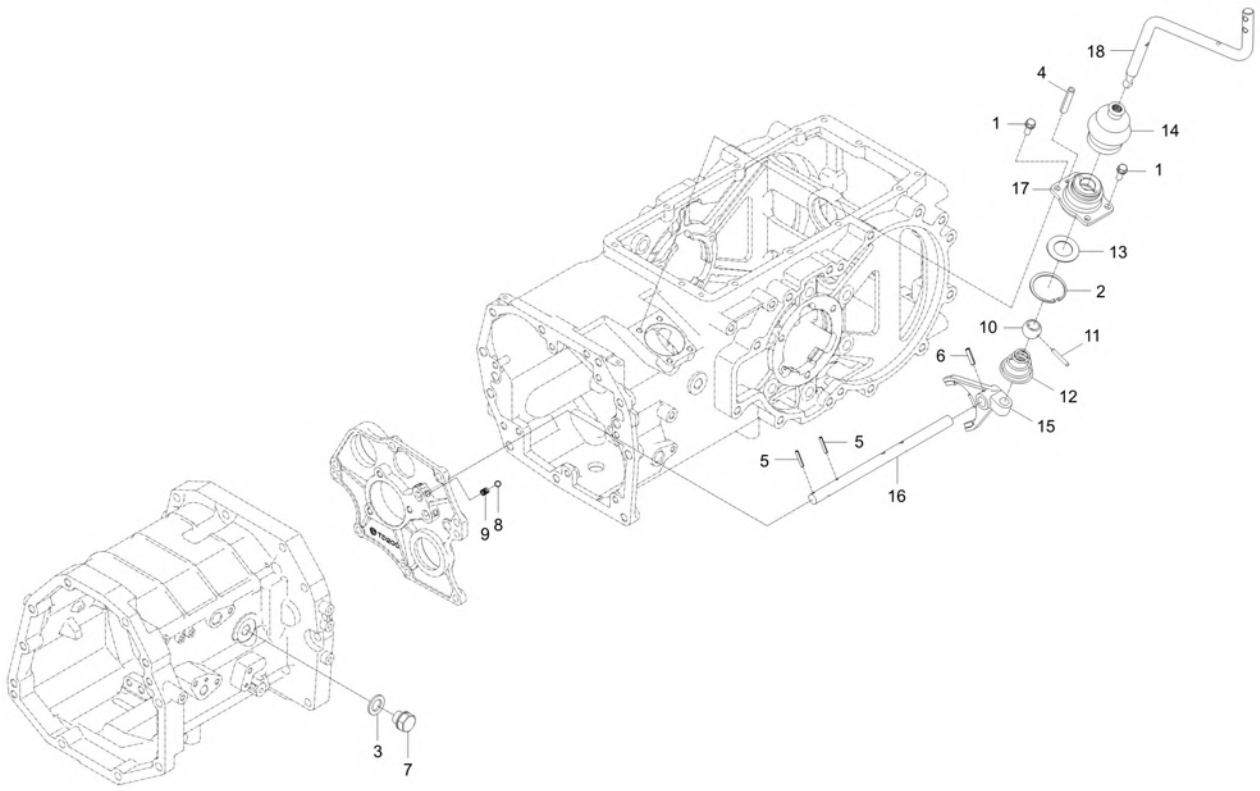

A : DK4510

No.	Part Number	Description	Qty A	Qty B	Qty C	Qty D	Qty E	I.C	Remark
1	01123-50820	BOLT, WASHER v	4						M8XP1.25
2	04611-00520	SNAP RING	1						
3	04717-01600	WASHER, SEAL	1						
4	05411-00412	OB PIN,SPRING	1						
5	05411-00425	PIN, SPRING	2						
6	05411-00625	PIN, SPRING v	1						DIA6.4XL25
7	06331-45016	PLUG M16 P 1.25	1						M16P1.5
8	07715-01605	BALL,STEEL	1						5/16"
9	62331-1853-2	SPRING	1						DIA1.4
10	T5715-21331	BALL	1						
11	T5715-21341	PIN	1						
11	T5715-21342	PIN dnr v	1					<----->	
12	T5715-21361	SPRING,CONE	1						
13	T5715-21371	WASHER	1						
13	T5715-21372	Washer, Plain	1					<------	
14	T5715-21382	JABARA dnr v	1						
14	T5715-21383	JABARA v	1					<------	
15	T5715-23112	FORK, SHIFT RANGE	1						

----> Old replace New
<---- New replace Old
<-X-> Not interchangeable
<---> Interchangeable
<-O-> Interchangeable with another part(s)
* Please place an order assy(*)

https://tractormanualz.com/

TD2-G272002

RANGE SHIFT FORK GROUP

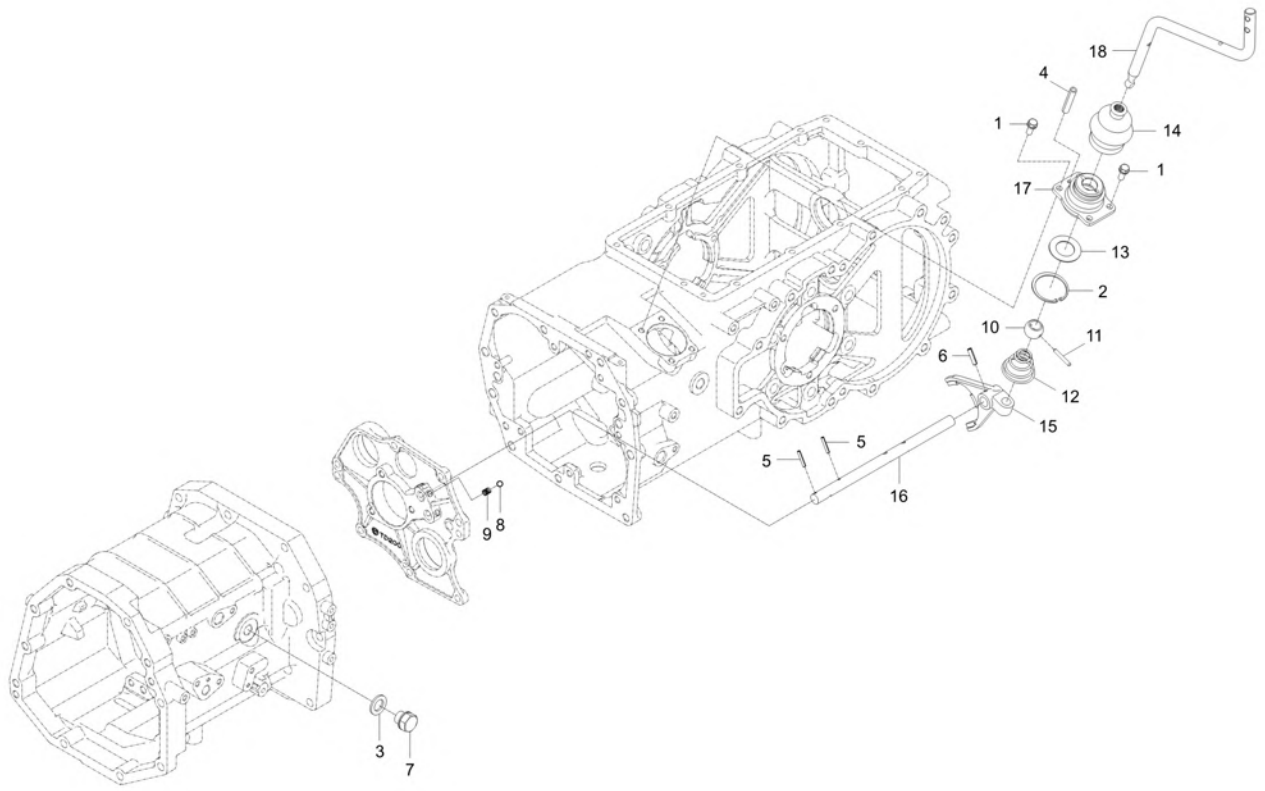

A : DK4510

No.	Part Number	Description	Qty A	Qty B	Qty C	Qty D	Qty E	I.C	Remark
16	T5715-23131	ROD, FORK RANGE	1						
17	T5715-23152	COVER, RANGE SHIFT	1						
18	T5715-23162	LEVER, RANGE	1						
18	T5715-23163	LEVER,RANGE	1					<----->	

----> Old replace New
<----> Interchangeable
* Please place an order assy(*)
<---- New replace Old
<-O-> Interchangeable with another part(s)
<-X-> Not interchangeable

https://tractormanualz.com/

TD2-G281002

SPIRAL BEVEL PINION SHAFT GROUP

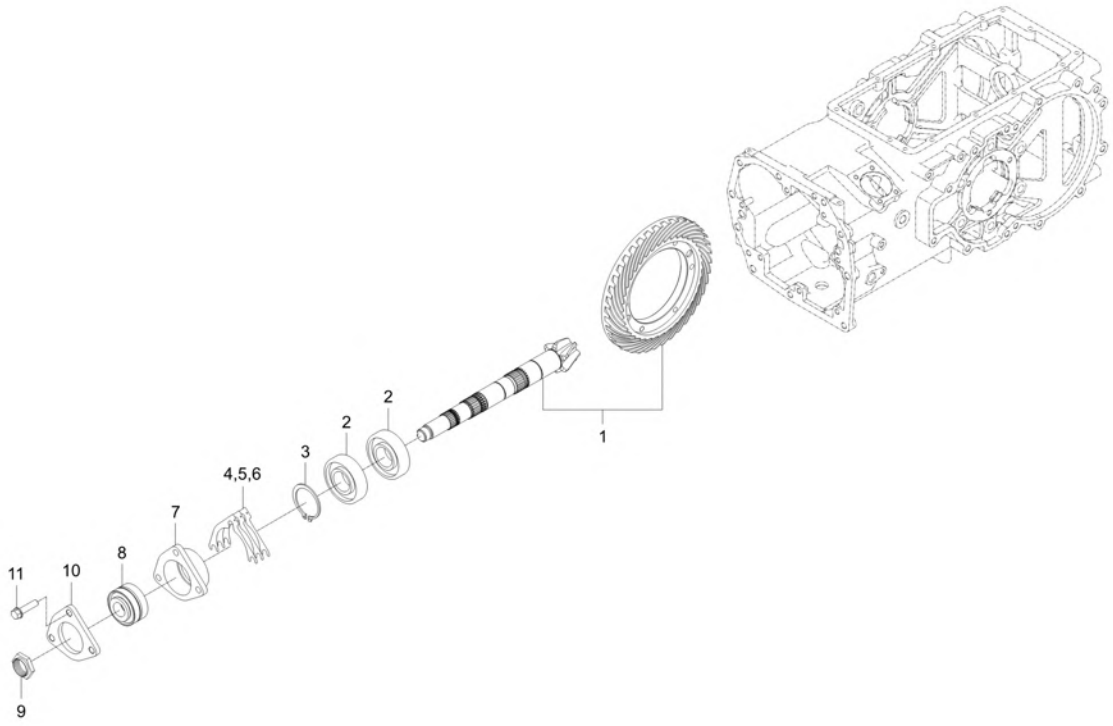

A : DK4510

No.	Part Number	Description	Qty A	Qty B	Qty C	Qty D	Qty E	I.C	Remark
1	T5715-26111	SPIRAL BEVEL GEAR ASSEMBLY	1						
2	08101-06307	BEARING, BALL	2						#6307
3	04612-00350	CIR CLIP, EXTERNAL	1						
4	T2610-23831	SHIM0.1	1						
5	T2610-23841	SHIM0.2 dnr v	1						
6	T2610-23851	SHIM0.5	1						
7	T2610-23823	CASE, BEARING	1						
8	38240-2214-1	BEARING,TAPER ROLLER	1						NTN30305D DB+4.5
9	31220-2234-2	NUT	1						HEX32*17
10	T2610-23882	COVER, BEARING	1						
11	01774-51040	FLANGE BOLT	3						

----> Old replace New
<---- New replace Old
<-X-> Not interchangeable
<---> Interchangeable
<-O-> Interchangeable with another part(s)
* Please place an order assy(*)

https://tractormanualz.com/

TD2-G282001

REAR DIFFERENTIAL GROUP

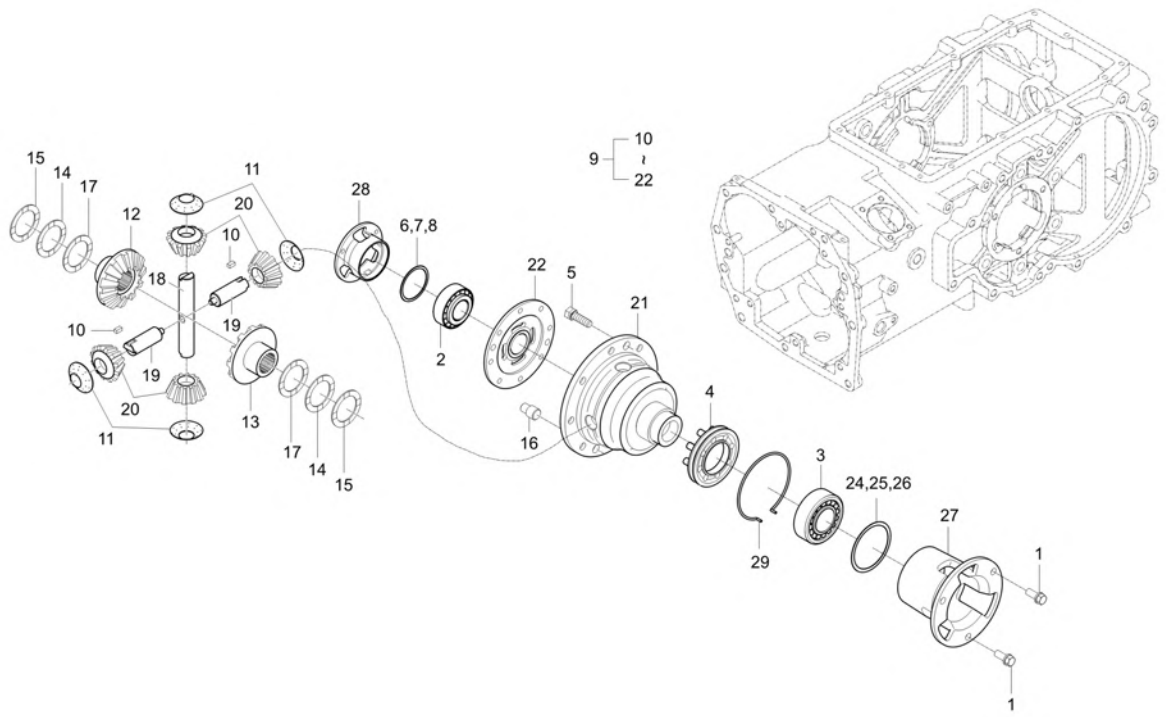

A : DK4510

No.	Part Number	Description	Qty A	Qty B	Qty C	Qty D	Qty E	I.C	Remark
1	01133-51025	BOLT	6						M10XP1.25
2	08711-30209	BEARING,TAPER ROLLER	1						내경DIA45
3	08711-32011	BEARING,TAPER ROLLER	1						내경DIA55
4	37300-2661-4	DIFF LOCK SHIFTER	1						
5	T4115-43871	BOLT dnr v	8						
5	37800-4387-1	BOLT	8					<--O-->	M10xP1.25
6	T4520-44081	SHIM 0.1 v	1						T0.1
7	T4520-44091	SHIM 0.2	1						T0.2
8	T4520-44101	SHIM 0.4 dnr v	1						T0.4
9	T4620-26104	DIFF SYSTEM ASSY dnr v	1						
9	T4620-26105	DIFF SYSTEM ASSY	1					<------	
9	T4620-26106	DIFF SYSTEM ASSY	1					<------	
9	T4115-26101	ASSYDIFFRENTIAL	1					<------	
9	T4115-26102	ASSY DIFFRENTIAL	1					<--O-->	
10	31220-2628-1	KEY	2						
11	31220-2639-2	WASHER, DIFF PINION	4						
12	37300-2643-2	GEAR, DIFF RH	1						
13	37300-2644-2	DIFF GEAR LH	1						

----> Old replace New
<---- New replace Old
<-X-> Not interchangeable
<---> Interchangeable
<-O-> Interchangeable with another part(s)
* Please place an order assy(*)

https://tractormanualz.com/

TD2-G282001

REAR DIFFERENTIAL GROUP

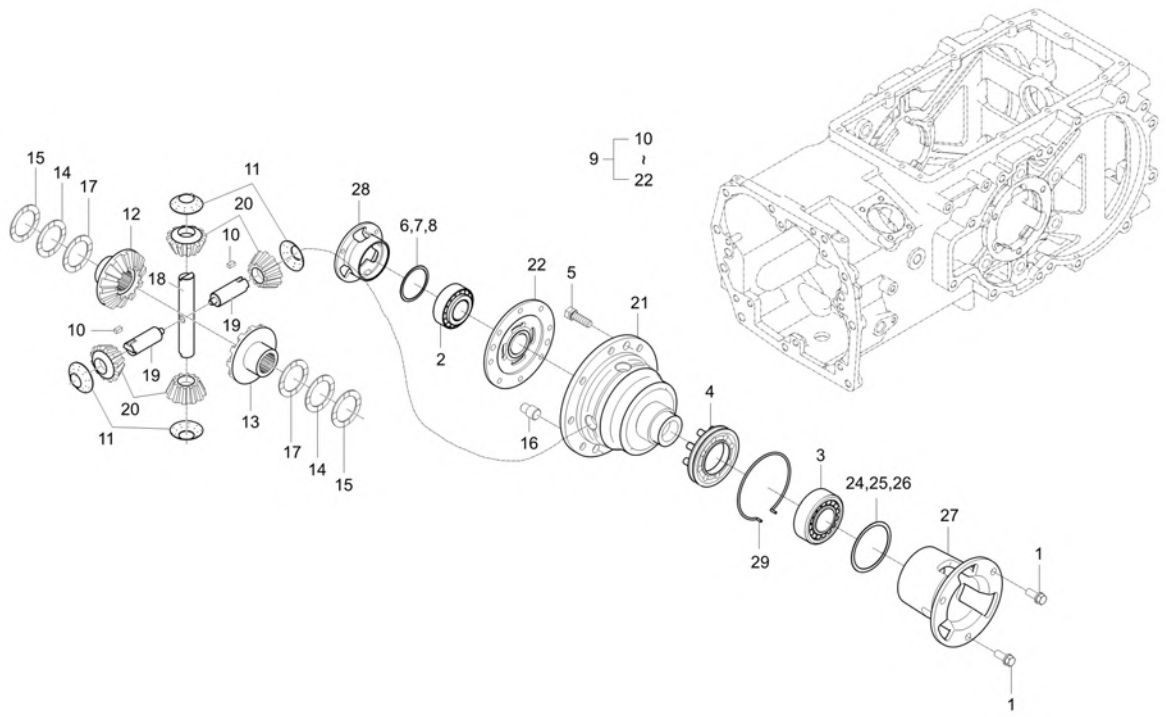

A : DK4510

No.	Part Number	Description	Qty A	Qty B	Qty C	Qty D	Qty E	I.C	Remark
14	37300-2648-1	WASHER 1, DIFF	2						
15	37300-2649-1	WASHER 2, DIFF	2						
16	37300-2817-2	PIN, PARALLEL	2						
17	38240-2647-2	WASHER, DIFF.3	2						
18	38430-2634-3	DIFF PINION SHAFT 1	1						
18	38430-2634-4	SHAFT 1, DIFFERENTIAL PINION	1					<------	
18	T4158-26341	SHAFT,DIFF.PINION 1	1					<------	
19	T2185-26331	SHAFT,DIFF.PINION 2	2						
19	T2185-26332	SHAFT 2, DIFFERENTIAL PINION	2					<------	
19	T4158-26331	SHAFT,DIFF.PINION 2	2					<------	
20	T2240-26354	PINION, DIFFERENTIAL	4						
20	T2240-26355	PINION, DIFF	4					<------	
20	TD22-0089A	PINION, DIFF dnr v	4					<------	
20	T4158-26351	PINION v	4					<------	
21	T4115-26511	CASE, DIFFRENTIAL v	1						
21	38240-2651-5	DIFFERENTIAL SYSTEM CASE	1					<--O-->	
22	T4115-26521	COVER,DIFFERENTIAL CASE v	1						
22	38240-2652-3	DIFFERENTIAL CAP	1					<--O-->	

----> Old replace New
<---- New replace Old
<-X-> Not interchangeable
<---> Interchangeable
<-O-> Interchangeable with another part(s)
* Please place an order assy(*)

https://tractormanualz.com/

TD2-G282001

REAR DIFFERENTIAL GROUP

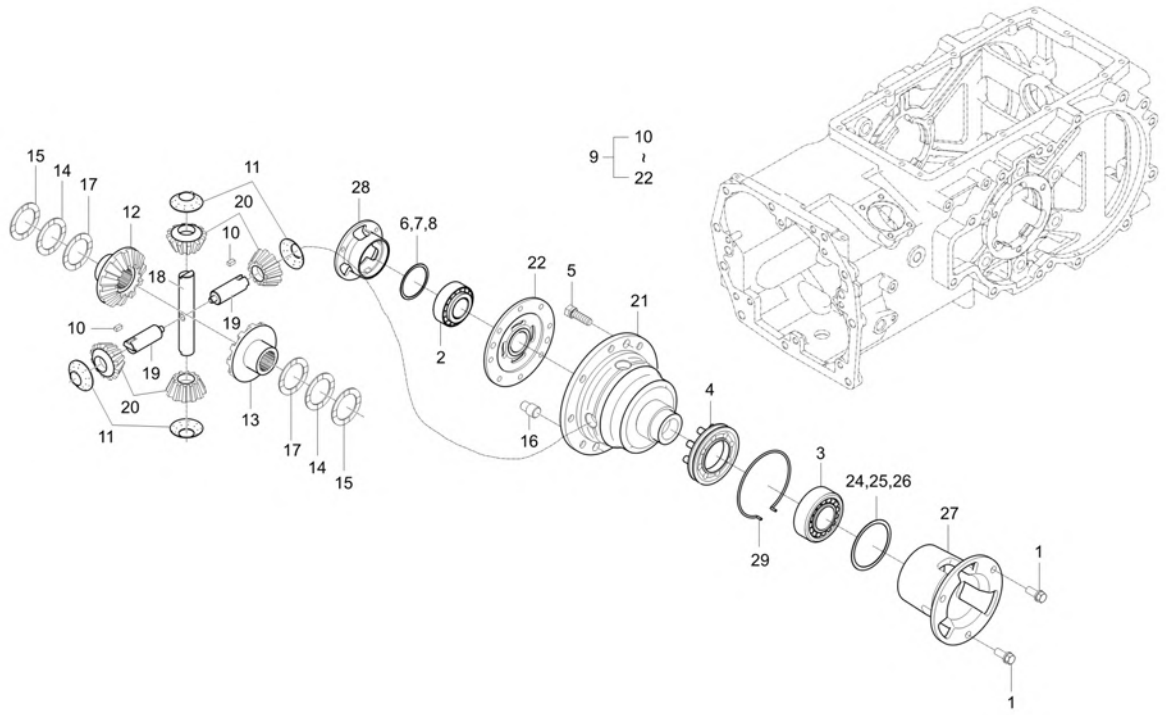

A : DK4510

No.	Part Number	Description	Qty A	Qty B	Qty C	Qty D	Qty E	I.C	Remark
24	T5410-26161	SHIM 0.1	1						
25	T5410-26171	SHIM 0.2	1						
26	T5410-26181	SHIM 0.5T	1						
27	T5715-26561	CASE,DIFF. BEARING LH	1						
28	T5715-26571	CASE,DIFF. BEARING RH	1						
29	T5715-26591	HOLDING, SPRING	2						
30	01133-51025	BOLT	8						M10XP1.25

----> Old replace New
<----> Interchangeable
* Please place an order assy(*)
<---- New replace Old
<-O-> Interchangeable with another part(s)
<-X-> Not interchangeable

https://tractormanualz.com/

TD2-G283001

REAR DIFFERENTIAL LOCK GROUP

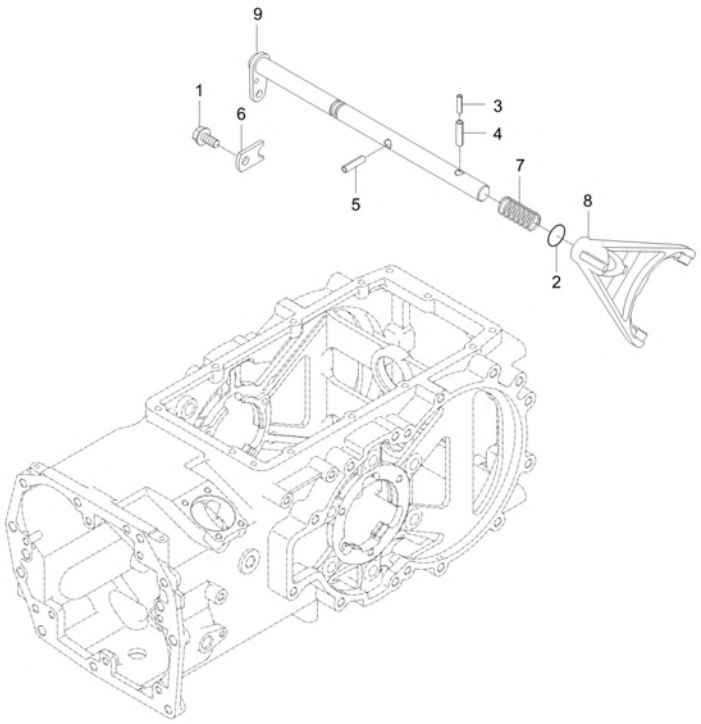

A : DK4510

No.	Part Number	Description	Qty A	Qty B	Qty C	Qty D	Qty E	I.C	Remark
1	01754-50816	BOLT, FLANGE	1						M8XP1.25
2	04811-00140	O RING	1						
3	05411-00540	PIN,SPRING	1						
4	05411-00840	PIN, SPRING	1						DIA8*40
5	05411-00840	PIN, SPRING	1						DIA8*40
6	T2555-23331	STOPPER	1						
7	T2555-26641	FRICTION SPRING	1						
8	T5715-26631	FORK,SHAFT	1						
9	T5715-26682	CAM, DIFFERENTIAL LOCK	1						

----> Old replace New <---- New replace Old <-X-> Not interchangeable
<---> Interchangeable <-O-> Interchangeable with another part(s)
* Please place an order assy(*)

https://tractormanualz.com/

TD2-G293003

BRAKE GROUP

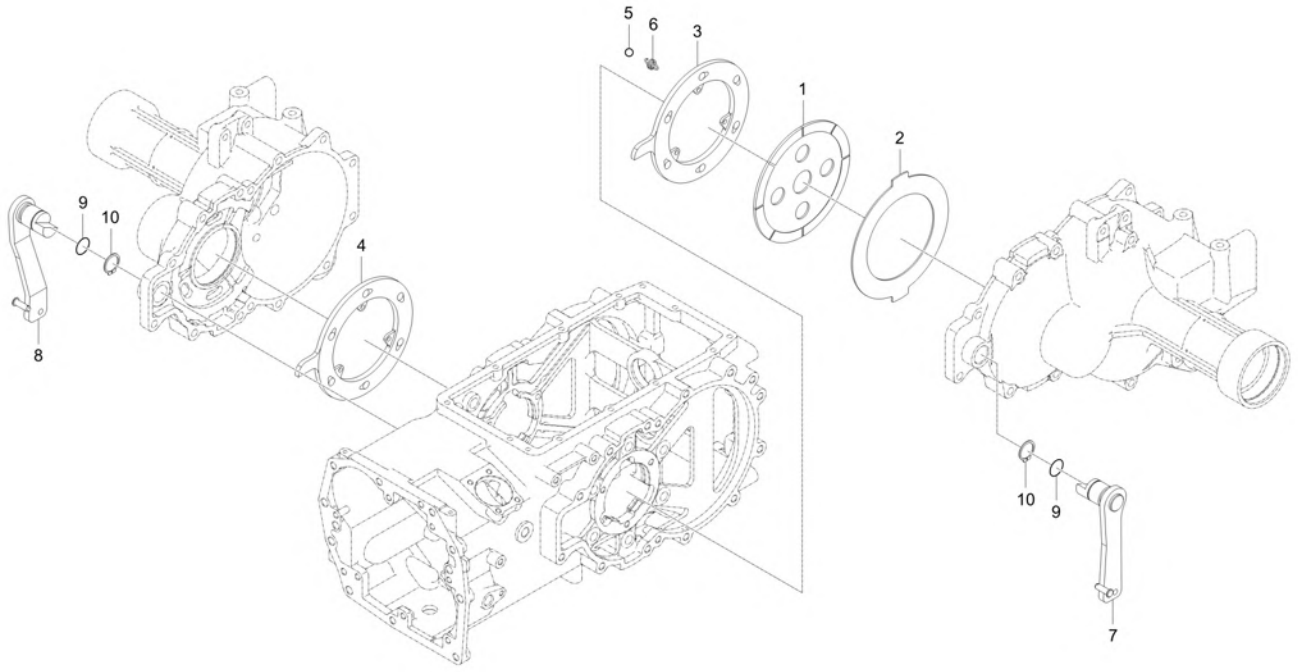

A : DK4510

No.	Part Number	Description	Qty A	Qty B	Qty C	Qty D	Qty E	I.C	Remark
1	T2440-28203	BREAK DISC v	6						
1	T5755-28211	BREAK DISC	6					<------	
2	T5715-28222	PLATE, BRAKE	6						
3	T5715-28242	PLATE, CAM LH dnr v	1						
3	T5715-28243	PLATE,CAM LH	1					<------	
4	T5715-28252	PLATE, CAM RH	1						
4	T5715-28253	PLATE,CAM RH	1					<------	
5	07715-00805	BALL,STEEL obs v	12						5/8"
6	T2555-28461	FRICTION SPRING	6						
7	T5715-28272	LEVER, BRAKE CAM LH	1						
7	TD22-0110A	LEVER, BRAKE CAM-LH	1					<------	
8	T5715-28282	LEVER, BRAKE CAM RH	1						
8	TD22-0111A	LEVER, BRAKE CAM-RH	1					<------	
9	04811-00240	O RING	2						P24
10	04612-00300	SNAP RING	2						

----> Old replace New
<---- New replace Old
<-X-> Not interchangeable
<---> Interchangeable
<-O-> Interchangeable with another part(s)
* Please place an order assy(*)

https://tractormanualz.com/

TD2-G2A1001

REAR AXLE GROUP

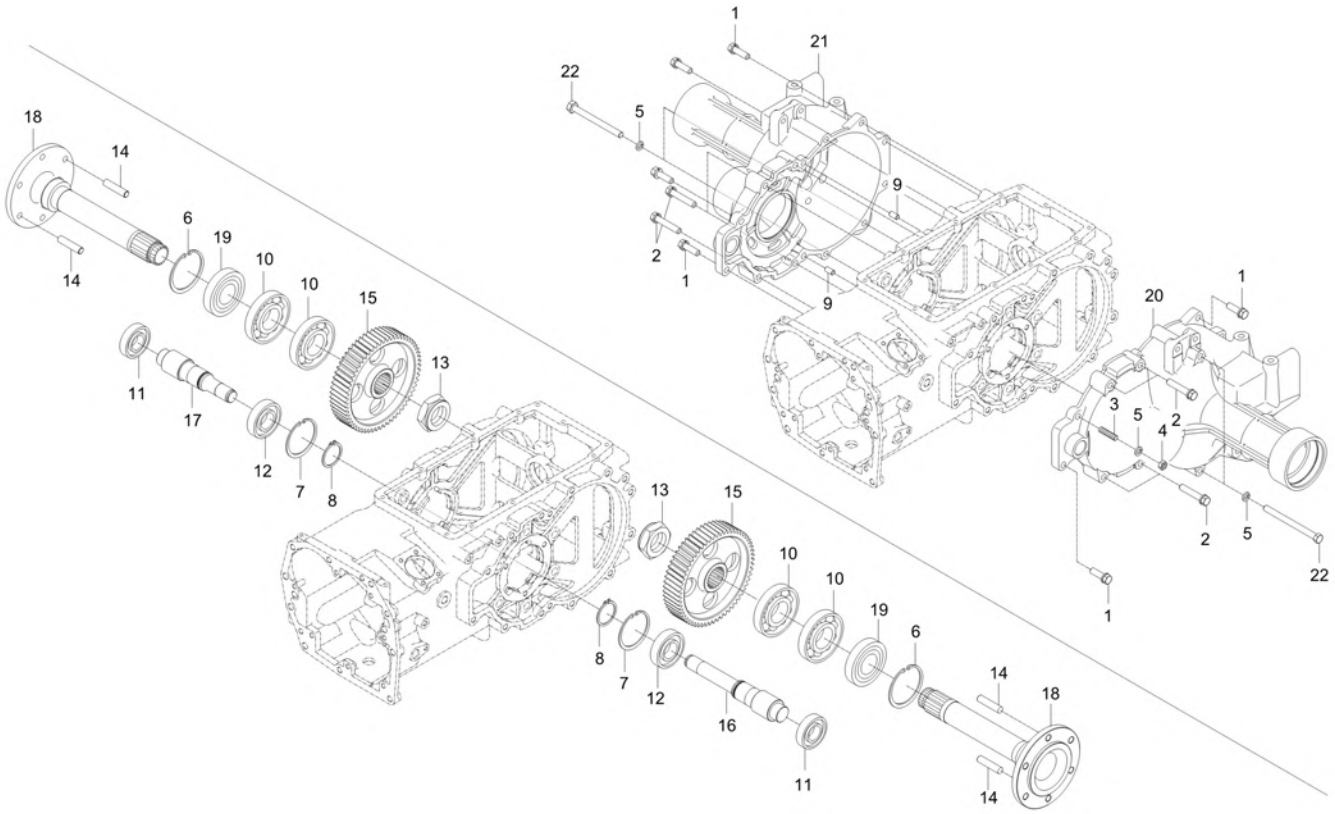

A : DK4510

No.	Part Number	Description	Qty A	Qty B	Qty C	Qty D	Qty E	I.C	Remark
1	01133-51240	BOLT, WASHER	6						M12XP1.25
2	01133-51265	BOLT	8						M12XP1.25
3	01574-51235	STUD	4						M12*1.25*30
4	02176-50120	NUT	4						M12XP1.25
5	04512-50120	SPRING WASHER	10						M12
6	04611-01000	RING,SNAP	2						
7	04611-01000	RING,SNAP	2						
8	04612-00450	RING,SNAP	2						
8	04811-00390	O RING	2					<--O-->	
9	05012-01018	PIN, STRAIGHT	4						
10	08101-06211	BEARING,BALL	4						#6211
11	08101-06308	BALL BEARING	2						#6308
12	08101-06309	BALL BEARING v	2						#6309
13	T4125-27202	NUT	2						
14	T4340-27122	STUD	4						
15	T5715-26671	GEAR 60	2						
15	T5715-26672	GEAR60	2					<------	
16	T5715-26712	SHAFT, 11 GEAR LH	1						

----> Old replace New
<---> Interchangeable
* Please place an order assy(*)
<---- New replace Old
<-O-> Interchangeable with another part(s)
<-X-> Not interchangeable

https://tractormanualz.com/

TD2-G2A1001

REAR AXLE GROUP

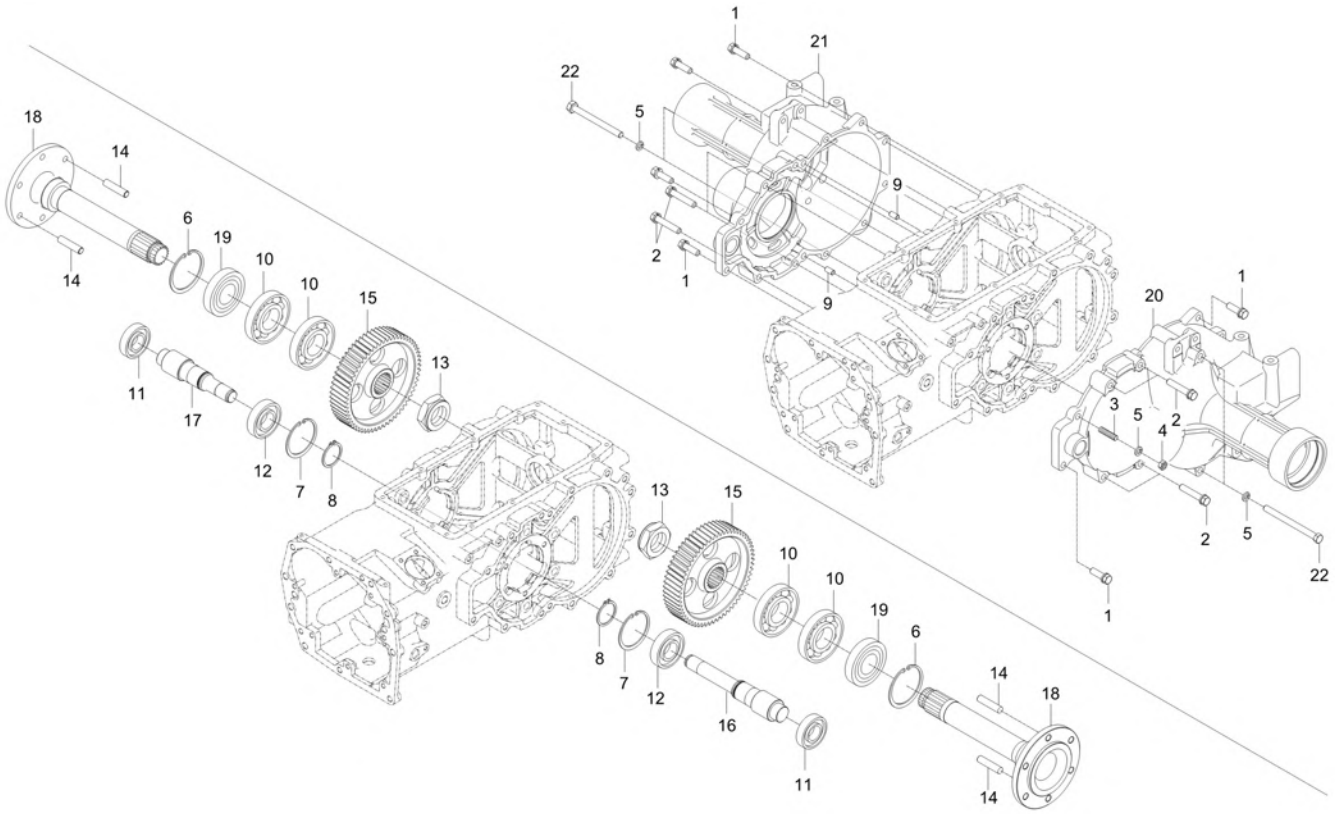

A : DK4510

No.	Part Number	Description	Qty A	Qty B	Qty C	Qty D	Qty E	I.C	Remark
16	T5715-26713	SHAFT, 11 GEAR(LH)	1					<--O-->	
17	T5715-26722	SHAFT, 11 GEAR RH	1						
17	T5715-26723	SHAFT, 11 GEAR (RH)	1					<--O-->	
18	T5715-27111	WHEEL SHAFT	2						
18	T5715-27112	WHEEL SHAFT	2 TR7600163 ~ WR7600104					<----->	
19	T5715-27131	OIL SEAL	2						
20	T5715-28133	CASE, REAR AXLE LH	1						
20	T5715-28134	CASE,REAR AXLE LH	1					<------	
20	T5715-28135	CASE,REAR AXLE LH	1					<------	
20	T5715-28136	CASE,REAR AXLE LH	1					<----->	
21	T5715-28143	CASE, REAR AXLE RH	1						
21	T5715-28144	CASE,REAR AXLE RH	1					<------	
21	T5715-28145	CASE,REAR AXLE RH	1					<------	
21	T5715-28146	CASE,REAR AXLE RH	1					<----->	
22	T5715-28321	BOLT	6						

----> Old replace New
<---- New replace Old
<-X-> Not interchangeable
<---> Interchangeable
<-O-> Interchangeable with another part(s)
* Please place an order assy(*)

https://tractormanualz.com/

TD2-G2B1002

FRONT WHEEL DRIVE SHAFT GROUP

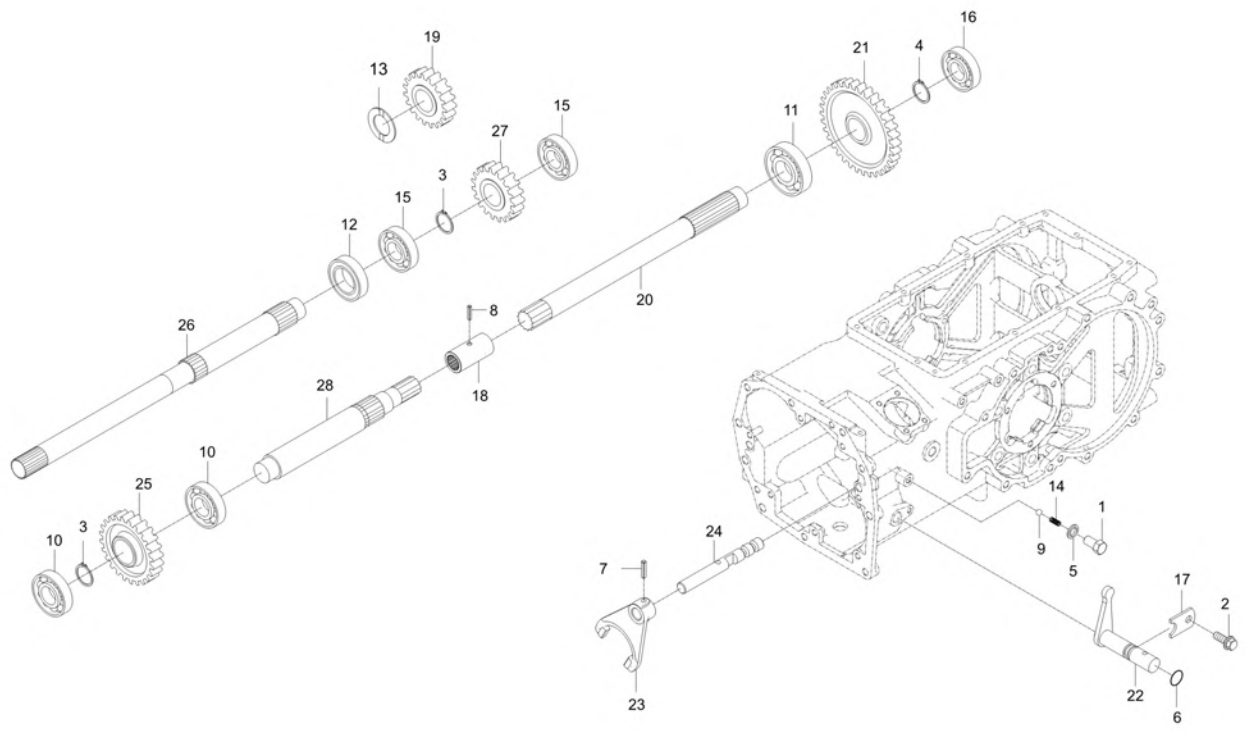

A : DK4510

No.	Part Number	Description	Qty A	Qty B	Qty C	Qty D	Qty E	I.C	Remark
1	01173-51018	BOLT v	1						
2	01754-50816	BOLT, FLANGE	1						M8XP1.25
3	04612-00300	SNAP RING	2						
4	04612-00300	SNAP RING	1						
5	04717-01000	WASHER, SEAL	1						M10
6	04811-00140	O RING	1						
7	05411-00625	PIN, SPRING v	1						DIA6.4XL25
8	05411-00635	PIN, SPRING	1						DIA5*36
9	07715-01605	BALL,STEEL	1						5/16"
10	08101-06305	BEARING,BALL v	2						DIA25
11	08101-06305	BEARING,BALL v	1						DIA25
12	09502-55210	SEAL OIL v	1						DIA25
13	34150-2156-1	COLLAR	1						T2*42*42
14	62331-1853-2	SPRING	1						DIA1.4
15	T2555-06205	BALL BEARING	2						#6205, GMB CHINA
16	T2555-06205	BALL BEARING	1						#6205, GMB CHINA
17	T2555-23331	STOPPER	1						
18	T4620-44592	COUPLING	1						

----> Old replace New <---- New replace Old <-X-> Not interchangeable
<---> Interchangeable <-O-> Interchangeable with another part(s)
* Please place an order assy(*)

https://tractormanualz.com/

TD2-G2B1002

FRONT WHEEL DRIVE SHAFT GROUP

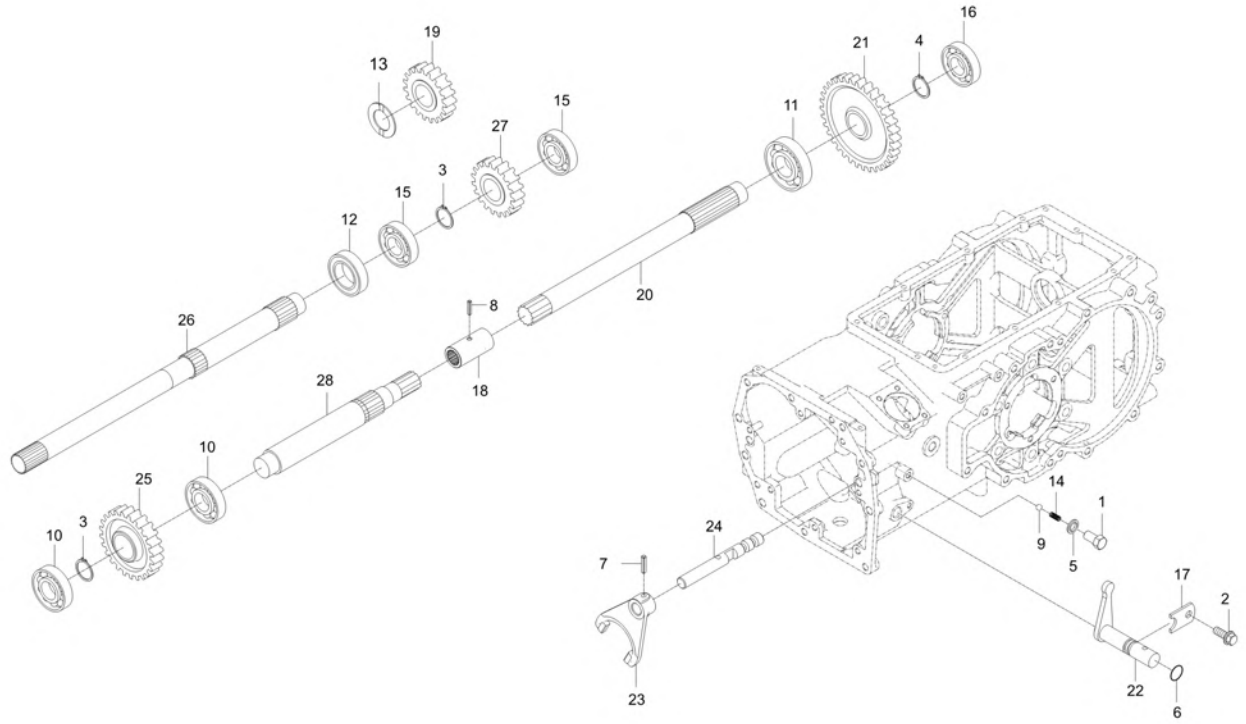

A : DK4510

No.	Part Number	Description	Qty A	Qty B	Qty C	Qty D	Qty E	I.C	Remark
19	T5715-44511	GEAR,SPUR 20	1						
20	T5715-44521	SHAFT1,FRONT WHEEL DRIVE	1						
20	T5715-44522	SHAFT1,FRONT WHEEL DRIVE	1					<------	
21	T5715-44531	GEAR34	1						
22	T5715-44561	SHIFT ARM	1						
23	T5715-44571	FORK	1						
24	T5715-44582	ROD, FORK	1						
25	T5715-44611	GEAR 24	1						
26	T5715-44621	SHAFT2,FRONT WHEEL DRIVE	1						
27	T5715-44631	GEAR 19	1						
28	T5715-44651	4WD SHAFT	1						

----> Old replace New
<---- New replace Old
<-X-> Not interchangeable
<---> Interchangeable
<-O-> Interchangeable with another part(s)
* Please place an order assy(*)

https://tractormanualz.com/

TD2-G2C1001

PTO INPUT SHAFT GROUP

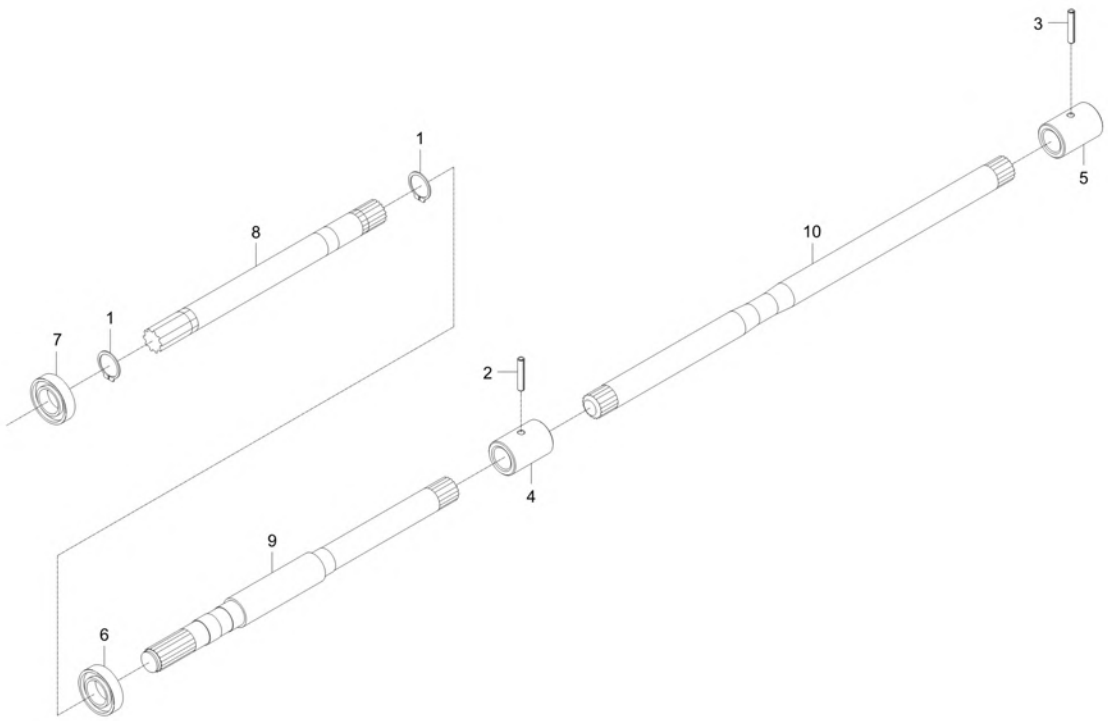

A : DK4510

No.	Part Number	Description	Qty A	Qty B	Qty C	Qty D	Qty E	I.C	Remark
1	04612-00250	CIR-CLIP	2						
2	05411-00635	PIN, SPRING	1						DIA5*36
3	05411-00635	PIN, SPRING	1						DIA5*36
4	37805-4452-1	COUPLING	1						
5	37805-4452-1	COUPLING	1						
6	T2555-06005	BALL BEARING	1						#6005, GMB CHINA
7	T2555-06005	BALL BEARING	1						#6005, GMB CHINA
8	T5715-25211	SHAFT 1,PTO DRIVE	1						
9	T5715-25221	SHAFT2, PTO DRIVE	1						
10	T5715-25231	SHAFT 3,PTO DRIVE	1						

----> Old replace New <---- New replace Old <-X-> Not interchangeable
<---> Interchangeable <-O-> Interchangeable with another part(s)
* Please place an order assy(*)

https://tractormanualz.com/

TD2-G2C4002

PTO SHAFT GROUP

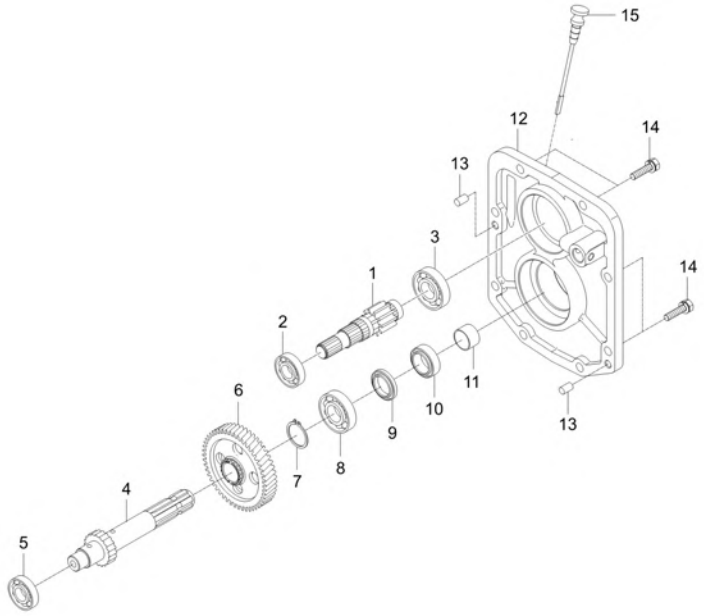

A : DK4510

No.	Part Number	Description	Qty A	Qty B	Qty C	Qty D	Qty E	I.C	Remark
1	T5715-25262	SHAFT, GEAR	1						
1	T5715-25263	SHAFT, GEAR	1					<------	
1	TD22-0128A	SHAFT, GEAR-10	1					<----->	
2	08101-06305	BEARING,BALL v	1						DIA25
3	08101-06306	BEARING, BALL	1						#6306
4	T5715-25281	SHAFT,PTO OUTPUT	1						
5	08101-06305	BEARING,BALL v	1						DIA25
6	T5715-25332	GEAR 47	1						
6	T5715-25333	GEAR 47	1					<------	
7	04612-00350	CIR CLIP, EXTERNAL	1						
8	08101-06307	BEARING, BALL	1						#6307
9	T4620-25442	SEAL, OIL	1						
10	T4620-25452	SEAL, OIL	1						
11	T4620-25383	SLEEVE	1						
12	T5710-25411	CASE PTO	1						
13	05012-00818	PIN, PARALLEL	2						
14	01133-51035	WASHER BOLT	8						M10X1.25
15	T5715-25901	GAUGE,OIL	1						

----> Old replace New
<---- New replace Old
<-X-> Not interchangeable
<---> Interchangeable
<-O-> Interchangeable with another part(s)
* Please place an order assy(*)

https://tractormanualz.com/

TD2-G2C3001

PTO CLUTCH GROUP

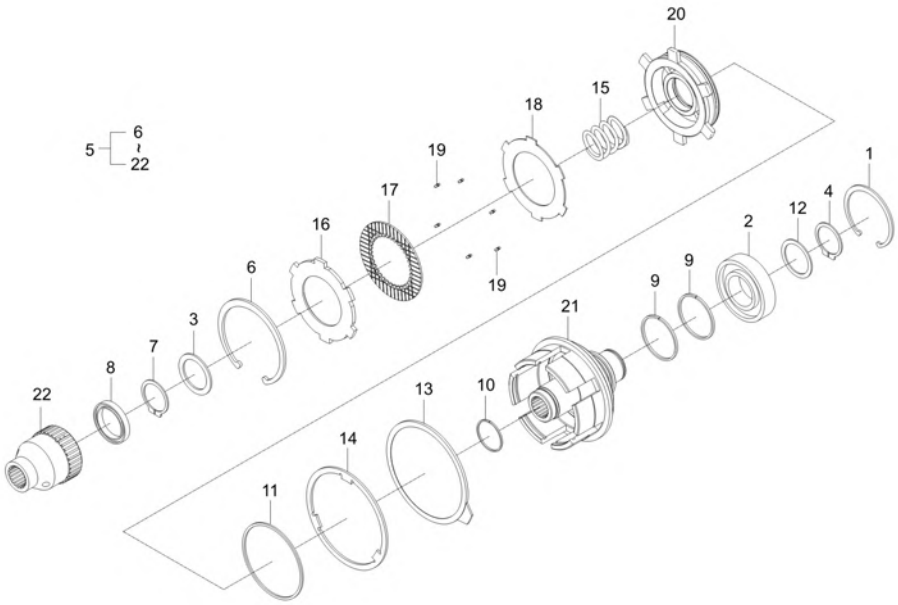

A : DK4510

No.	Part Number	Description	Qty A	Qty B	Qty C	Qty D	Qty E	I.C	Remark
1	04611-00720	RING,SNAP	1						DIA72
2	T2555-06207	BALLBEARING	1						#6207, GMB CHINA
3	T2615-25681	SPACER	1						
4	T2615-25691	CIR-CLIP	1						
5	T5715-23602	ASSY, PTO CLUTCH v	1						
5	T5715-23603	ASSY, PTO CLUTCH	1					<----->	
6	04611-00920	RING SNAP	1						DIA92
7	04612-00350	CIR CLIP, EXTERNAL	1						
8	08101-06807	BEARING BALL	1						#6807
9	T2615-25621	RING, SEAL	2						
9	TD22-0084A	RING, SEAL dnr v	2					<----->	
10	T2615-25661	RING, PISTON	1						
11	T2615-25671	RING, PISTON v	1						
12	T2615-25681	SPACER	1						
13	T2615-25711	PLATE, BRAKE	1						
14	T2615-25721	PLATE, RETURN	1						
15	T2615-25732	SPRING	1						
16	T2615-25742	PLATE,PRESSURE	1						

----> Old replace New <---- New replace Old <-X-> Not interchangeable
<---> Interchangeable <-O-> Interchangeable with another part(s)
* Please place an order assy(*)

https://tractormanualz.com/

TD2-G2C3001

PTO CLUTCH GROUP

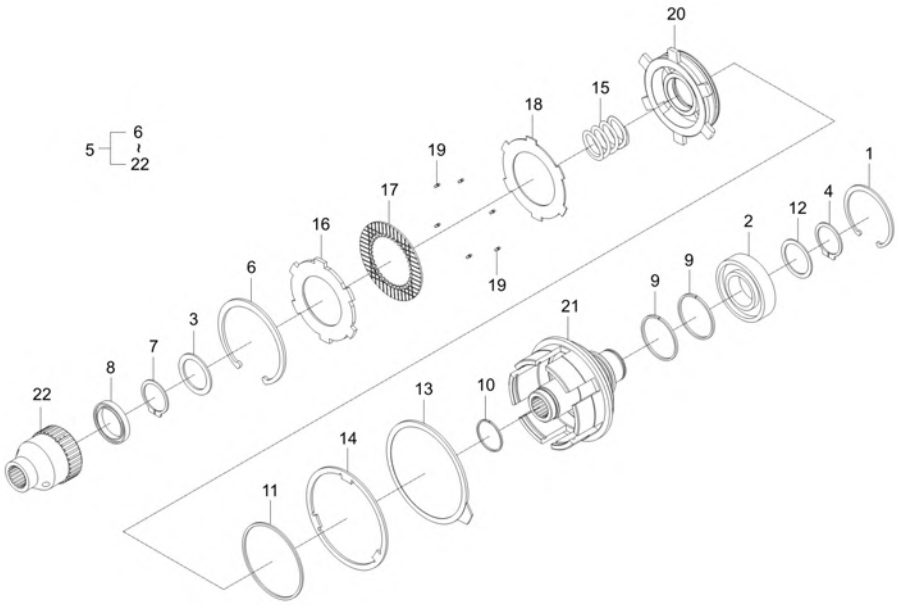

A : DK4510

No.	Part Number	Description	Qty A	Qty B	Qty C	Qty D	Qty E	I.C	Remark
17	T2615-25771	DISK, CLUTCH	4						
18	T2615-25782	PLATE,CLUTCH	4						
19	T2615-25791	RUBBER	9						
20	T5520-23651	PISTON	1						
21	T5715-25612	BODY, CLUTCH	1						
22	T5715-25762	HUB, SPLINE	1						

----> Old replace New
<---- New replace Old
<-X-> Not interchangeable
<---> Interchangeable
<-O-> Interchangeable with another part(s)
* Please place an order assy(*)

https://tractormanualz.com/

TD2-G2C5002

PTO SHIFT FORK GROUP

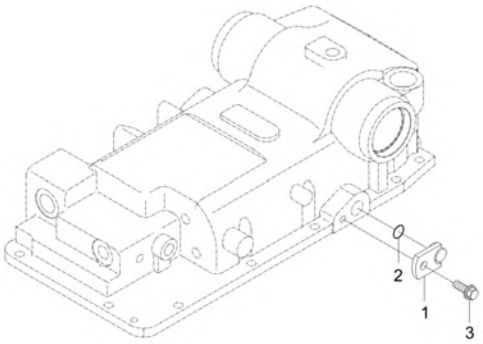

A : DK4510

No.	Part Number	Description	Qty A	Qty B	Qty C	Qty D	Qty E	I.C	Remark
1	T5715-25461	COVER	1						
2	04811-00140	O RING	1						
3	01754-50816	BOLT, FLANGE	1						M8XP1.25

----> Old replace New
<---> Interchangeable
* Please place an order assy(*)
<---- New replace Old
<-O-> Interchangeable with another part(s)
<-X-> Not interchangeable

https://tractormanualz.com/

TD2-G2G1002

REAR WHEEL GROUP

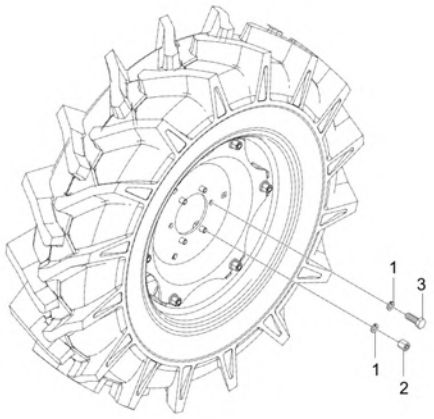

A : DK4510

No.	Part Number	Description	Qty A	Qty B	Qty C	Qty D	Qty E	I.C	Remark
1	04512-50160	WASHER, SPRING	12						M16
2	T4340-27131	NUT	4						
3	01073-51630	BOLT v	8						M16XP1.5

----> Old replace New
<---- New replace Old
<-X-> Not interchangeable
<---> Interchangeable
<-O-> Interchangeable with another part(s)
* Please place an order assy(*)

https://tractormanualz.com/

TD2-G224001

TRANSMISSION CASE GROUP

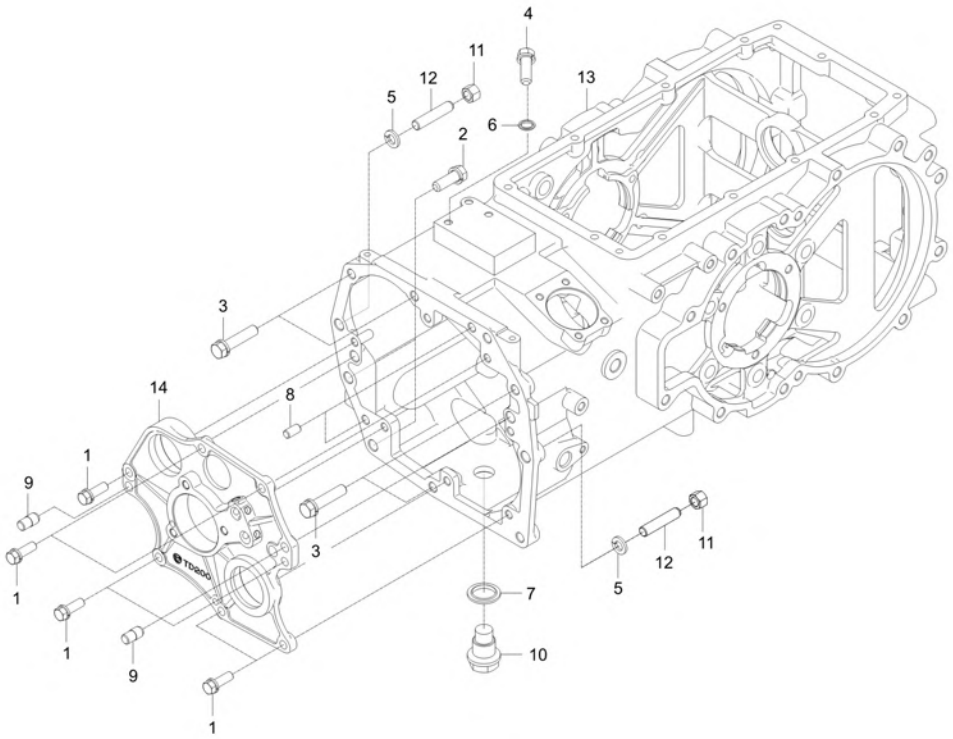

A : DK4510

No.	Part Number	Description	Qty A	Qty B	Qty C	Qty D	Qty E	I.C	Remark
1	01133-51030	WITH WASHER BOLT	7						M10XP1.25
2	01133-51235	WASHER BOLT	2						M12XP1.25
2	01177-51235	BOLT v	2					<------	M12XP1.25 (9T/스프
3	01133-51255	BOLT	6						
3	01177-51255	BOLT	6					<------	M12XP1.25 (9T/스프
4	01754-50816	BOLT, FLANGE	1						M8XP1.25
5	04512-50120	SPRING WASHER	2						M12
6	04717-00800	WASHER, SEAL	1						M8
7	04717-02650	WASHER, SEAL	1						
8	05012-01018	PIN, STRAIGHT	2						
9	37305-2817-1	STRAIGHT PIN	2						
10	T4125-14261	PLUG	1						
11	T4240-14081	NUT	2						
12	T4620-21481	STUD	2						
13	T5710-21113	CASE, TRANSMISSION	1						
13	T5710-21114	CASE,TRANSMISSION	1					<--O-->	
13	T5710-21115	CASE,TRANSMISSION	1					<------	
13	T5710-21116	CASE,TRANSMISSION	1					<--O-->	

----> Old replace New
<---- New replace Old
<-X-> Not interchangeable
<---> Interchangeable
<-O-> Interchangeable with another part(s)
* Please place an order assy(*)

https://tractormanualz.com/

TD2-G224001

TRANSMISSION CASE GROUP

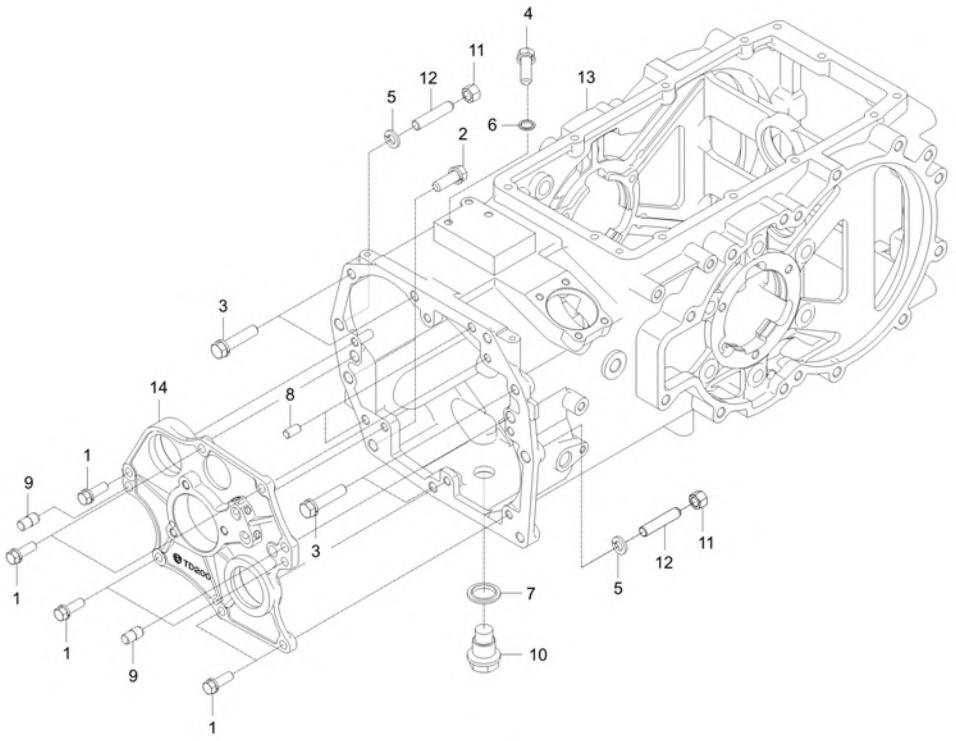

A : DK4510

No.	Part Number	Description	Qty A	Qty B	Qty C	Qty D	Qty E	I.C	Remark
14	T5715-21471	COVER, BEARING	1						

----> Old replace New
<----> Interchangeable
* Please place an order assy(*)
<---- New replace Old
<-O-> Interchangeable with another part(s)
<-X-> Not interchangeable

https://tractormanualz.com/

T5520-G310A

BEVEL PINION SHAFT GROUP

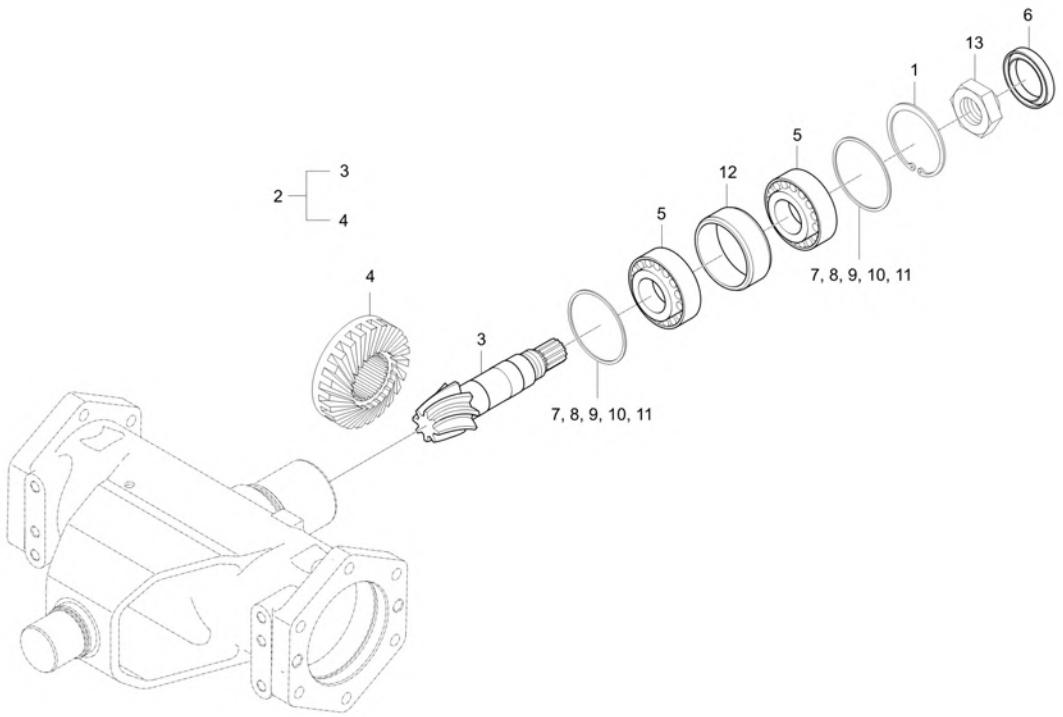

A : DK4510

No.	Part Number	Description	Qty A	Qty B	Qty C	Qty D	Qty E	I.C	Remark
1	04611-00580	RING SNAP	1						58
2	T2630-42202	SPIRAL BEVEL GEAR ASSEMBLY	1						
3	T2630-42264	SHAFT v	1						
4	T2630-42314	GEAR SPIRAL BEVEL 23 dnr v	1						
5	T4128-33228	BEARING TAPE ROLLER v	2						
6	T2630-42291	SEAL OIL	1						
7	T2630-42451	COLLER	2						T5.8
8	T2630-42461	COLLER	2						T5.9
9	T2630-42471	COLLER	2						T6.0
10	T2630-42481	COLLER	2						T6.1
11	T2630-42491	COLLER	2						T6.2
12	T2630-42751	SPACER	1						
13	T4620-21591	NUT,LOOK(28)	1						

----> Old replace New
<---- New replace Old
<-X-> Not interchangeable
<---> Interchangeable
<-O-> Interchangeable with another part(s)
* Please place an order assy(*)

https://tractormanualz.com/

TD2-G311001

FRONT AXLE SUPPORT GROUP

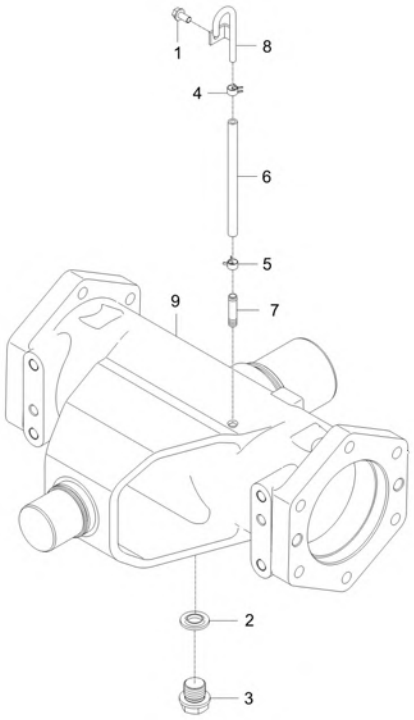

A : DK4510

No.	Part Number	Description	Qty A	Qty B	Qty C	Qty D	Qty E	I.C	Remark
1	01754-50816	BOLT, FLANGE	1						M8XP1.25
2	04717-01000	WASHER, SEAL	1						M10
3	06331-45010	PLUG v	1						M10*1.25
4	14911-4275-1	CLIP, TUBE	1						T0.8*#12
5	14911-4275-1	CLIP, TUBE	1						T0.8*#12
6	15301-7244-0	OVER FLOW HOSE	1						
7	T2630-42161	CONNECTOR, AIR BREATHER	1						
8	T5520-36591	CONNECTOR, AIR BREATHER	1						
9	T5715-42142	SUPPORT, FRONT AXLE RR dnr v	1						

----> Old replace New
<---- New replace Old
<-X-> Not interchangeable
<---> Interchangeable
<-O-> Interchangeable with another part(s)
* Please place an order assy(*)

https://tractormanualz.com/

TD2-G312001

FRONT DIFF SYSTEM GROUP

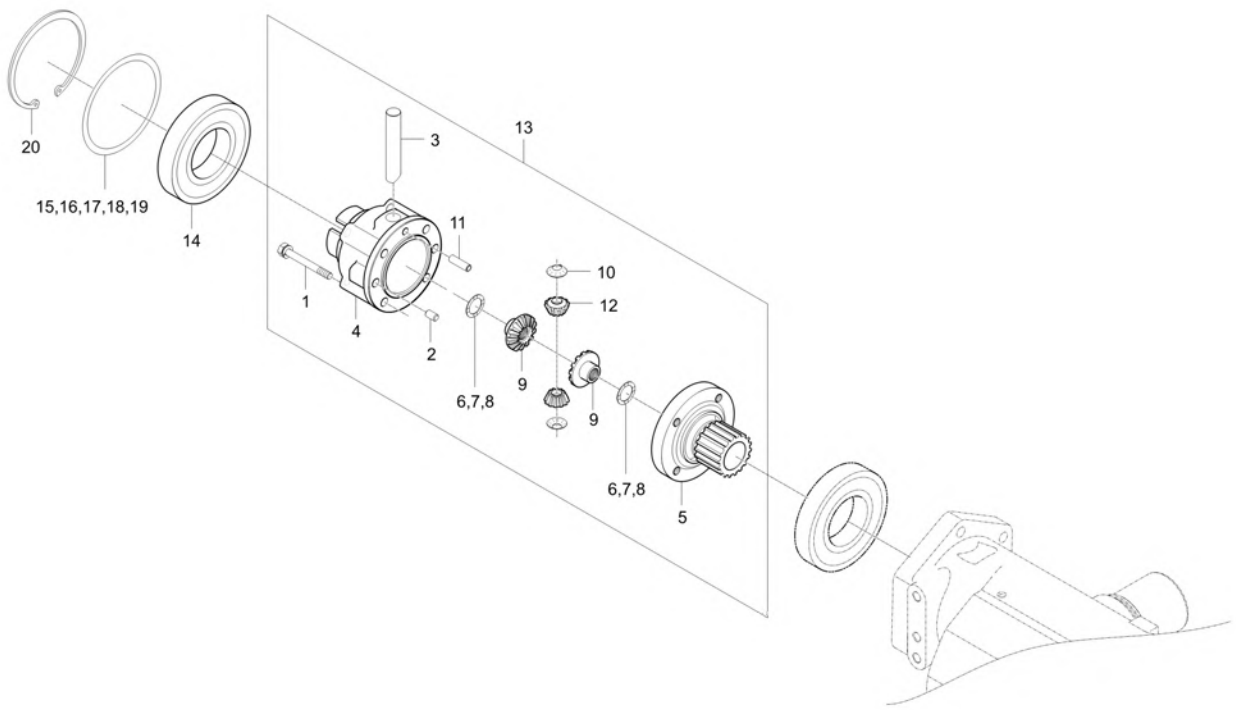

A : DK4510

No.	Part Number	Description	Qty A	Qty B	Qty C	Qty D	Qty E	I.C	Remark
1	01133-51075	BOLT, WASHER	4						M10XP1.25
2	05012-01018	PIN, STRAIGHT	2						DIA10XL18
3	T2630-43111	SHAFT, DIFF. PINION	1						
4	T2630-43121	CASE, FRONT DIFF	1						
5	T4125-42321	COVER v	1						
5	T4125-42322	COVER,DIFFERENTIAL CASE	1					<----->	
6	T4520-43071	SHIM, 0.8	2						T0.8
7	T4520-43081	SHIM, 0.1	2						T1.0
8	T4520-43091	SHIM, 1.2	2						T1.2
9	T4520-43141	GEAR, DIFF SIDE v	2						
10	T4520-43151	WASHER, DIFF PINION	2						
11	T4520-43171	PIN, PARALLEL	1						
12	T4682-43132	PINION, DIFFERENTIAL	2						
13	T4125-43102	FRONT DIFFERENTIAL ASSEMBLY v	1						
13	T4125-43103	FRONT DIFFERENTIAL ASSEMBLY	1					<----->	
14	08101-06212	BEARING, BALL	2						DIA60
15	T2630-43012	SHIM	1						T0.8
16	T2630-43022	SHIM	1						T1.0

----> Old replace New
<---- New replace Old
<-X-> Not interchangeable
<---> Interchangeable
<-O-> Interchangeable with another part(s)
* Please place an order assy(*)

https://tractormanualz.com/

TD2-G312001

FRONT DIFF SYSTEM GROUP

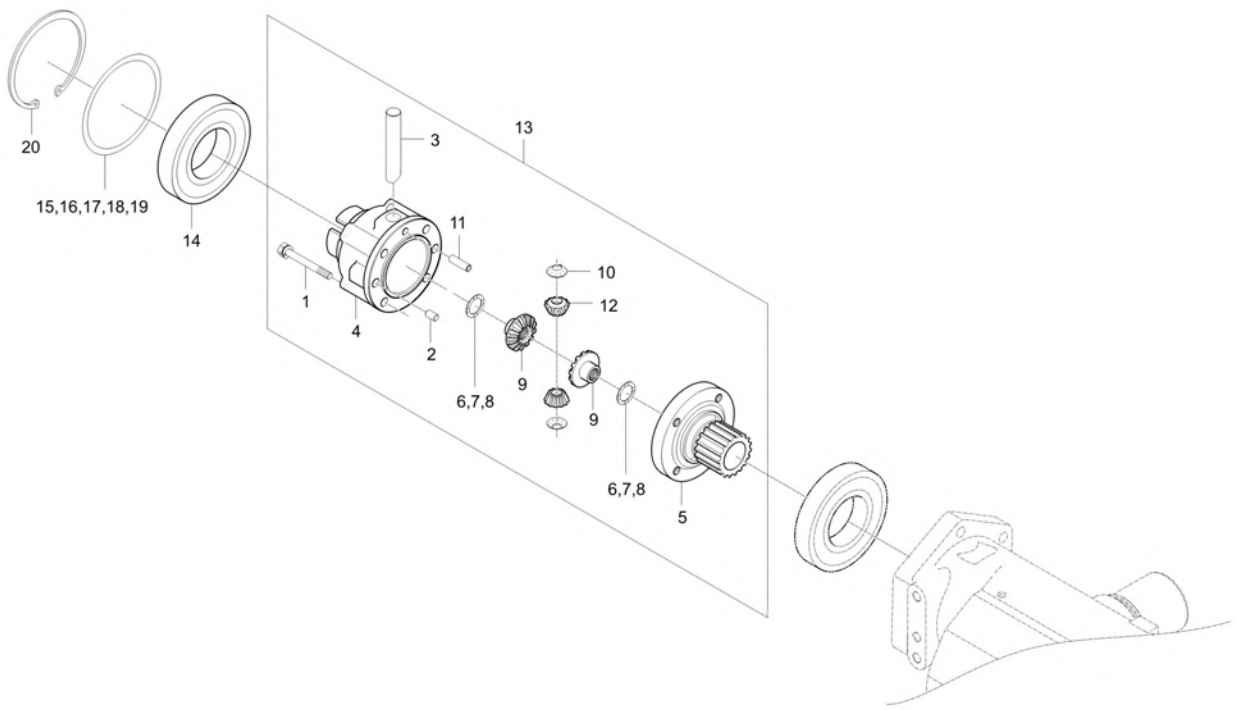

A : DK4510

No.	Part Number	Description	Qty A	Qty B	Qty C	Qty D	Qty E	I.C	Remark
17	T2630-43032	SHIM	1						T1.2
18	T2630-43042	SHIM	1						T2.0
19	T2630-43052	SHIM	1						T2.3
20	04611-01100	SNAP RING	1						

----> Old replace New
<---- New replace Old
<-X-> Not interchangeable
<---> Interchangeable
<-O-> Interchangeable with another part(s)
* Please place an order assy(*)

https://tractormanualz.com/

TD2-G313002

BEVEL PINION SHAFT GROUP

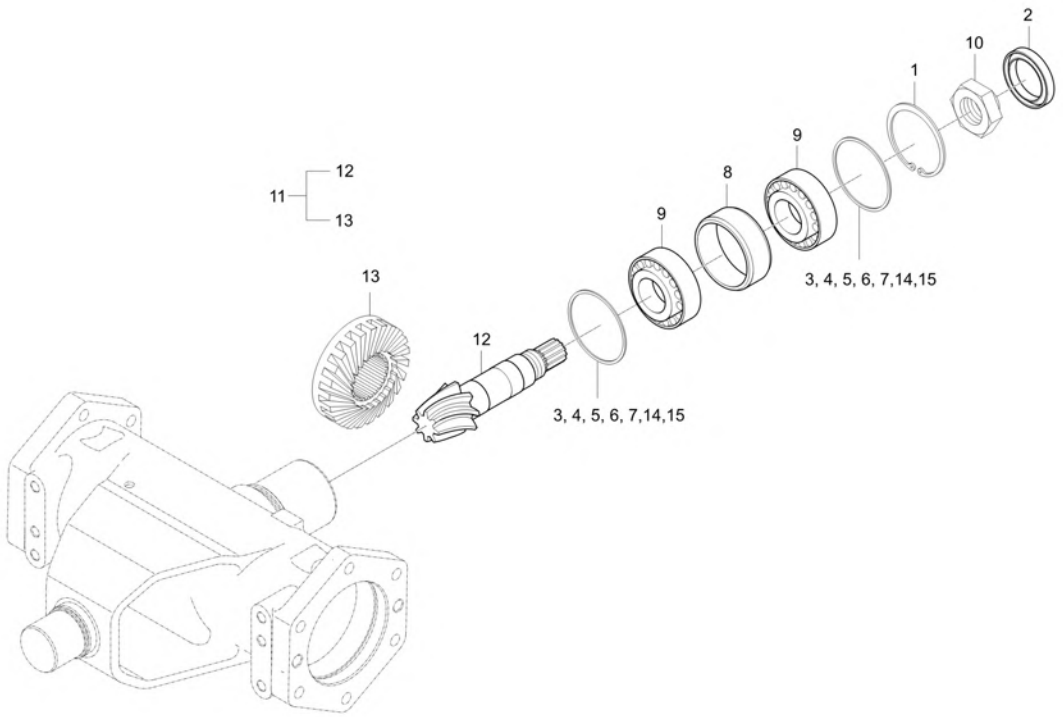

A : DK4510

No.	Part Number	Description	Qty A	Qty B	Qty C	Qty D	Qty E	I.C	Remark
1	04611-00580	RING SNAP	1						58
2	T2630-42291	SEAL OIL	1						
3	T2630-42451	COLLER	2						T5.8
3	T2630-42452	COLLAR, ADJUSTING	2					<------	T5.8
4	T2630-42461	COLLER	2						T5.9
4	T2630-42462	COLLAR, ADJUSTING	2					<------	T5.9
5	T2630-42471	COLLER	2						T6.0
5	T2630-42472	COLLAR, ADJUSTING obs v	2					<------	T6.0
6	T2630-42481	COLLER	2						T6.1
6	T2630-42482	COLLAR, ADJUSTING	2					<------	T6.1
7	T2630-42491	COLLER	2						T6.2
7	T2630-42492	COLLAR, ADJUSTING	2					<------	T6.2
8	T2630-42751	SPACER	1						
8	T2630-42752	BUSHING	1					<------	
9	T4128-33228	BEARING TAPE ROLLER v	2						
10	T4620-21591	NUT,LOOK(28)	1						
11	TD23-0007A	ASSY GEAR, BEVEL SPIRAL	1						
12	TD23-0005A	SHAFT,PINIONBEVELSPIRAL9	1						

----> Old replace New
<---- New replace Old
<-X-> Not interchangeable
<---> Interchangeable
<-O-> Interchangeable with another part(s)
* Please place an order assy(*)

https://tractormanualz.com/

TD2-G313002

BEVEL PINION SHAFT GROUP

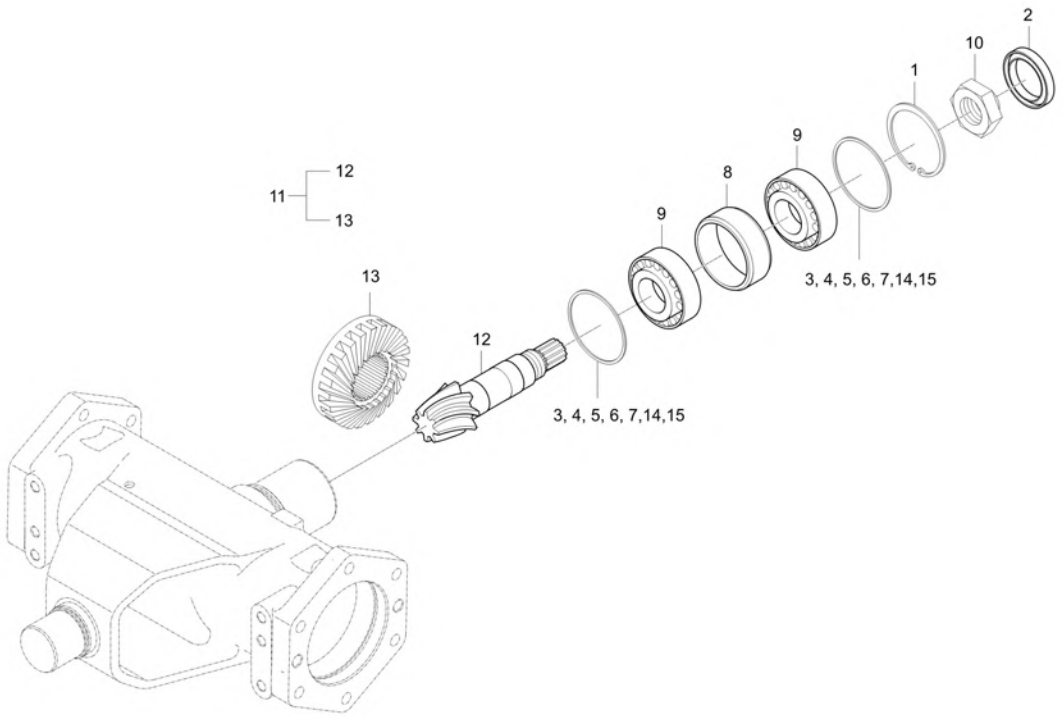

A : DK4510

No.	Part Number	Description	Qty A	Qty B	Qty C	Qty D	Qty E	I.C	Remark
13	TD23-0006A	GEAR,BEVELSPIRAL23	1						
14	T2630-42501	COLLAR, ADJUSTING	2						T6.3
15	T2630-42511	COLLAR, ADJUSTING	2						T6.4

----> Old replace New
<----> Interchangeable
* Please place an order assy(*)
<---- New replace Old
<-O-> Interchangeable with another part(s)
<-X-> Not interchangeable

https://tractormanualz.com/

TD2-G314001

BEVEL GEAR CASE GROUP

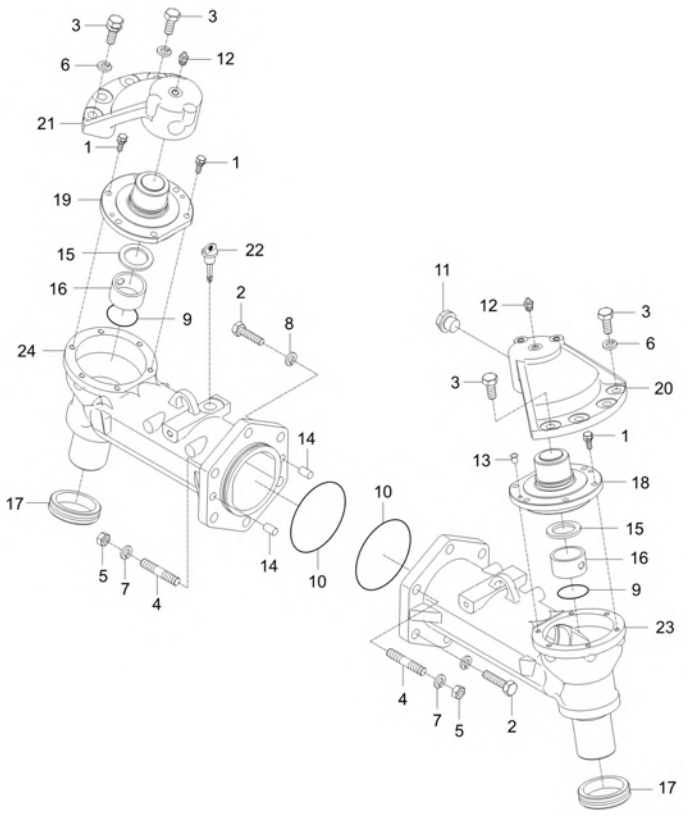

A : DK4510

No.	Part Number	Description	Qty A	Qty B	Qty C	Qty D	Qty E	I.C	Remark
1	01123-50825	BOLT WITH WASHER	12						M8XP1.25
2	01173-51445	BOLT	8						M14*P1.5*45
3	01176-51235	BOLT v	8						
4	01517-51440	STUD v	4						
5	02176-50140	NUT	4						M14XP1.5
6	04512-50120	SPRING WASHER	8						M12
7	04512-50140	SPRING WASHER	12						
8	04717-01400	WASHER,SEAL	1						
9	04811-00490	O RING	2						
10	04811-51050	O RING	2						
11	06331-45014	PLUG	1						M14XP1.5
12	06611-15010	NIPPLE, GREASE v	2						
13	32210-2758-1	PLUG	4						M12
14	37805-4350-1	PIN, DOWEL	4						
15	T4682-43261	COLLAR,THRUST	2						
16	T4682-43372	DX BUSH v	2						
17	T4818-43451	SEAL, FLOATING v	2						
18	T5520-31533	WINNOWBEARINGHOLDER	1						

----> Old replace New <---- New replace Old <-X-> Not interchangeable
<---> Interchangeable <-O-> Interchangeable with another part(s)
* Please place an order assy(*)

https://tractormanualz.com/

TD2-G314001

BEVEL GEAR CASE GROUP

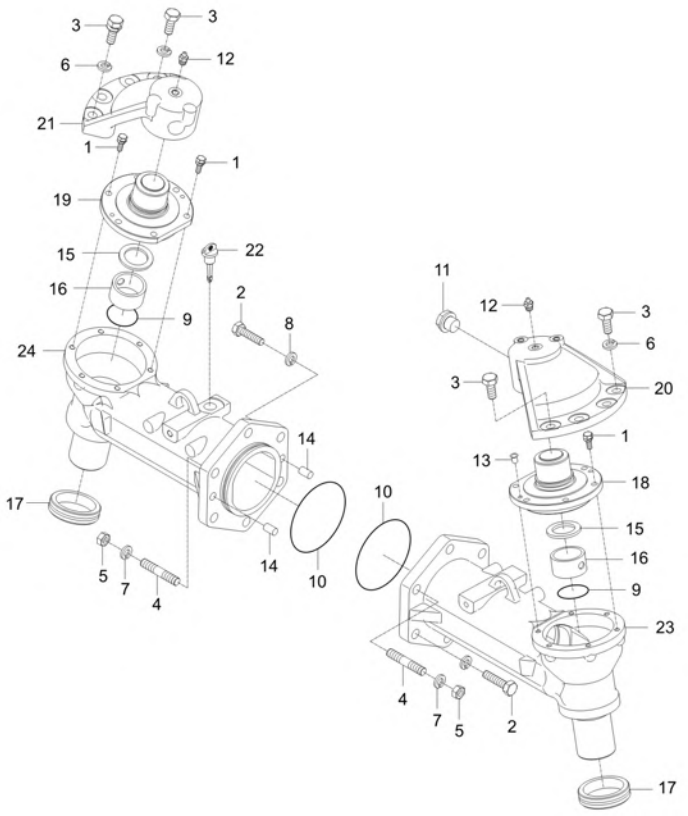

A : DK4510

No.	Part Number	Description	Qty A	Qty B	Qty C	Qty D	Qty E	I.C	Remark
19	T5520-31542	WINNOWBEARINGHOLDER	1						
20	T5520-31562	SUPPORT, AXLE CASE	1						
21	T5520-31572	SUPPORT, AXLE CASE	1						
22	T5520-36571	GAUGE,OIL	1						
22	T5520-36572	GAUGE,OIL	1					<------	
23	T5715-43312	BEVEL GEAR CASE	1						
24	T5715-43332	BEVEL GEAR CASE	1						

----> Old replace New
<---- New replace Old
<-X-> Not interchangeable
<---> Interchangeable
<-O-> Interchangeable with another part(s)
* Please place an order assy(*)

https://tractormanualz.com/

TD2-G315001

BEVEL GEAR SHAFT GROUP

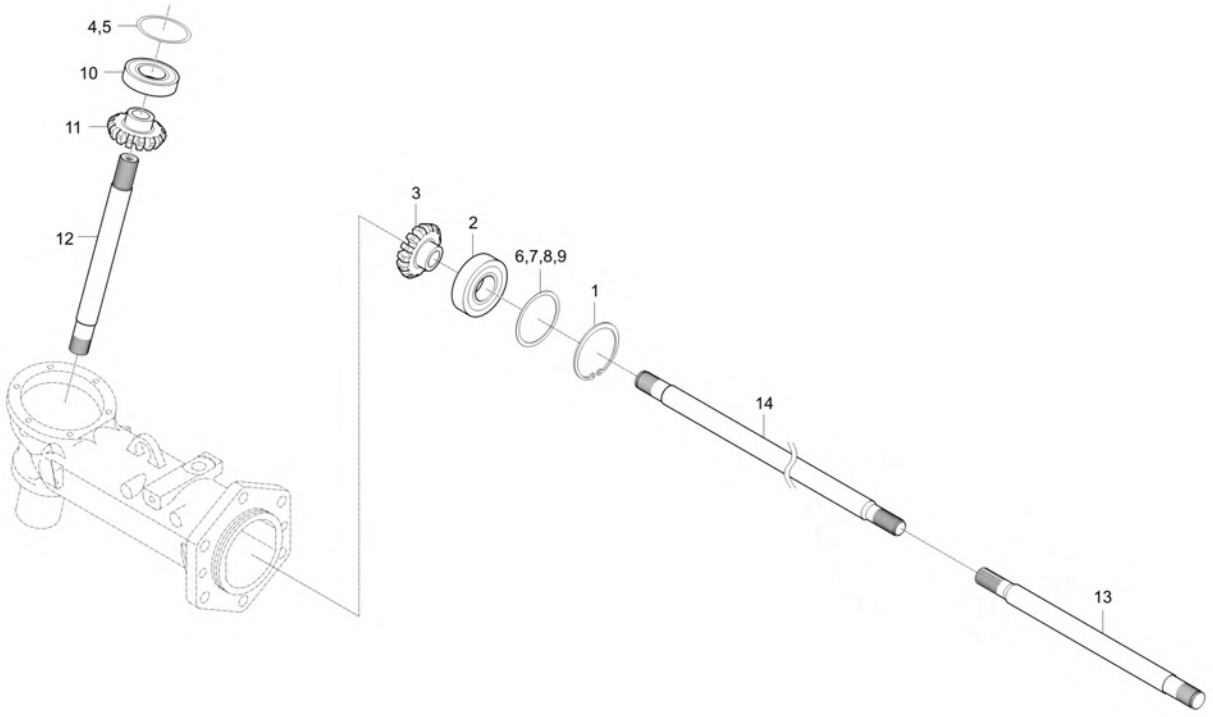

A : DK4510

No.	Part Number	Description	Qty A	Qty B	Qty C	Qty D	Qty E	I.C	Remark
1	04611-00800	RING, SNAP	2						
2	08101-06307	BEARING, BALL	2						#6307
3	T4125-43242	GEAR 11 BEVEL	2						
4	T4520-43011	SHIM, 0.1 dnr v	2						T0.1
5	T4520-43021	SHIM, 0.2 v	2						T0.2
6	T4520-43031	SHIM, 0.4	2						T0.4
7	T4520-43041	SHIM, 0.8	2						T0.8
8	T4520-43051	SHIM, 0.1	2						T1.0
9	T4520-43061	SHIM, 1.2	2						T1.2
10	T4682-43731	BEARING,BALL v	2						
11	T5520-32041	GEAR, BEVEL 17	2						
12	T5520-32051	BEVEL GEAR SHAFT	2						
13	T5715-43211	SHAFT,DIFF. GEAR LH	1						
14	T5715-43221	SHAFT,DIFF. GEAR RH	1						

----> Old replace New
<---- New replace Old
<-X-> Not interchangeable
<---> Interchangeable
<-O-> Interchangeable with another part(s)
* Please place an order assy(*)

https://tractormanualz.com/

TD2-G316001

FRONT AXLE CASE GROUP

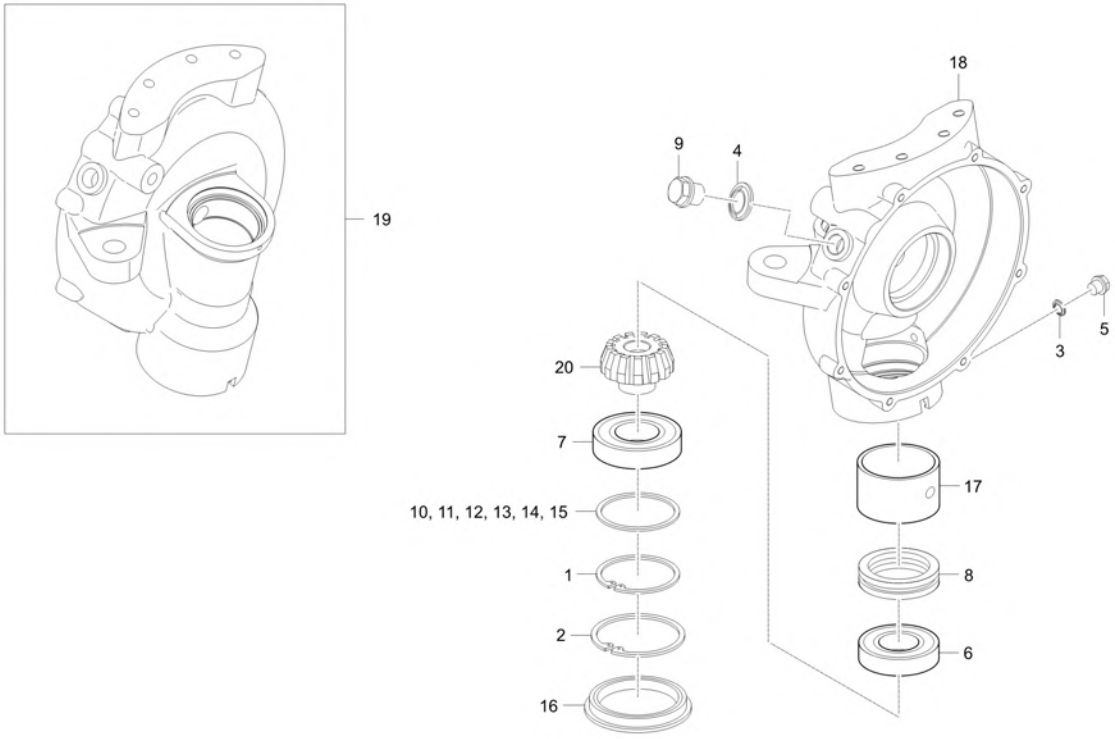

A : DK4510

No.	Part Number	Description	Qty A	Qty B	Qty C	Qty D	Qty E	I.C	Remark
1	04611-00800	RING, SNAP	2						
2	04611-00920	RING SNAP	2						DIA92
3	04717-01000	WASHER, SEAL	2						M10
4	04717-02150	WASHER,SEAL	2						
5	06331-45010	PLUG v	2						M10*1.25
6	08101-06206	BEARING, BALL v	2						#6206
7	08101-06208	BEARING BALL v	2						#6208
8	08401-51107	THRUST BALL BEARING	2						
9	34150-1426-1	USE 34150-14261	2						DIA30X34
10	T4520-43011	SHIM, 0.1 dnr v	2						T0.1
11	T4520-43021	SHIM, 0.2 v	2						T0.2
12	T4520-43031	SHIM, 0.4	2						T0.4
13	T4520-43041	SHIM, 0.8	2						T0.8
14	T4520-43051	SHIM, 0.1	2						T1.0
15	T4520-43061	SHIM, 1.2	2						T1.2
16	T4620-43541	PLUG	2						
17	T4930-43601	BUSHING	2						
18	T5520-32512	CASE, FRONT AXLE LH v	1						

----> Old replace New <---- New replace Old <-X-> Not interchangeable
<---> Interchangeable <-O-> Interchangeable with another part(s)
* Please place an order assy(*)

https://tractormanualz.com/

TD2-G316001

FRONT AXLE CASE GROUP

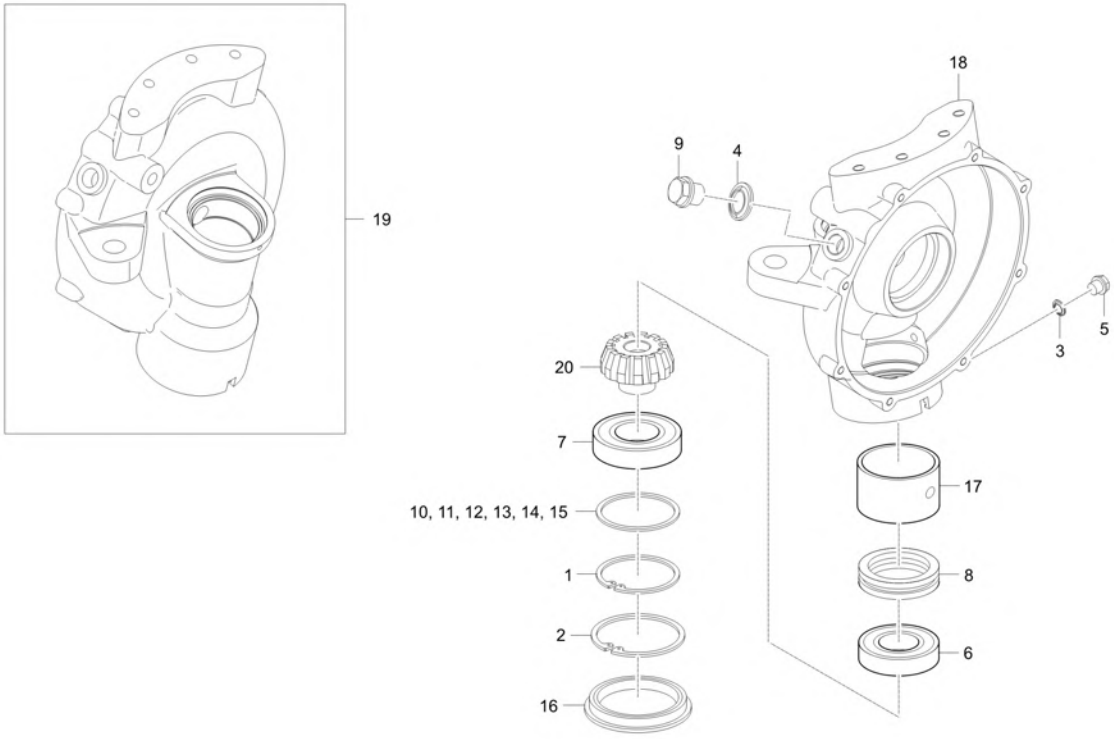

A : DK4510

No.	Part Number	Description	Qty A	Qty B	Qty C	Qty D	Qty E	I.C	Remark
18	T5520-32513	CASE, FRONT AXLE LH	1					<------	
18	TD23-0046A	CASE, FRONT AXLE-LH	1					<------	
18	TD23-0046B	CASE, FRONT AXLE LH	1					<------	
19	T5520-32522	CASE, FRONT AXLE RH	1						
19	T5520-32523	CASE, FRONT AXLE RH	1					<------	
19	TD23-0047A	CASE, FRONT AXLE-RH	1					<------	
19	TD23-0047B	CASE, FRONT AXLE RH	1					<------	
20	T5520-32532	GEAR, BEVEL 10	2						

----> Old replace New
<---- New replace Old
<-X-> Not interchangeable
<---> Interchangeable
<-O-> Interchangeable with another part(s)
* Please place an order assy(*)

https://tractormanualz.com/

TD2-G317001

FRONT AXLE GROUP

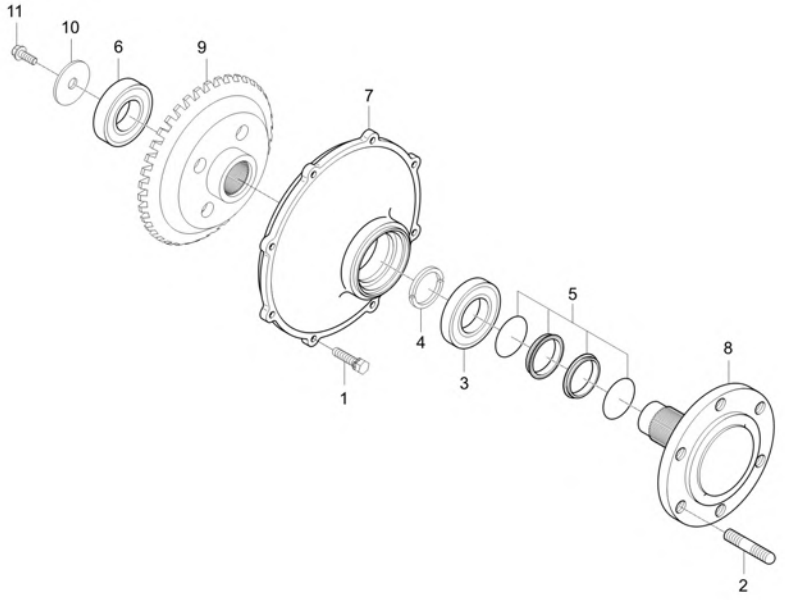

A : DK4510

No.	Part Number	Description	Qty A	Qty B	Qty C	Qty D	Qty E	I.C	Remark
1	01123-50835	BOLT, WITH WASHER	16						M8X1.25
2	01517-51632	STUD v	4						M16*1.5*32
3	08101-06309	BALL BEARING v	2						#6309
4	T4340-43681	CIR-CLIP v	4						사각 5
5	T4520-43652	FLOATING SEAL ASS`Y v	2						
6	T4682-43731	BEARING,BALL v	2						
7	T4686-43622	COVER FRONT AXLE v	2						
8	T5520-33012	AXLE FRONT v	2						
8	T5521-33011	AXLE, FRONT	1 TR7600099 ~ WR7600192						
8	T5521-33011	AXLE, FRONT	2					<------	
9	T5520-33051	GEAR,BEVEL 40	2						
10	T5520-33081	MOUNTING PLATE	2						
11	T8105-75770	BOLT, UBS	2						M8*P1.25

----> Old replace New
<---- New replace Old
<-X-> Not interchangeable
<---> Interchangeable
<-O-> Interchangeable with another part(s)
* Please place an order assy(*)

https://tractormanualz.com/

TD2-G321001

STEERING CYLINDER GROUP

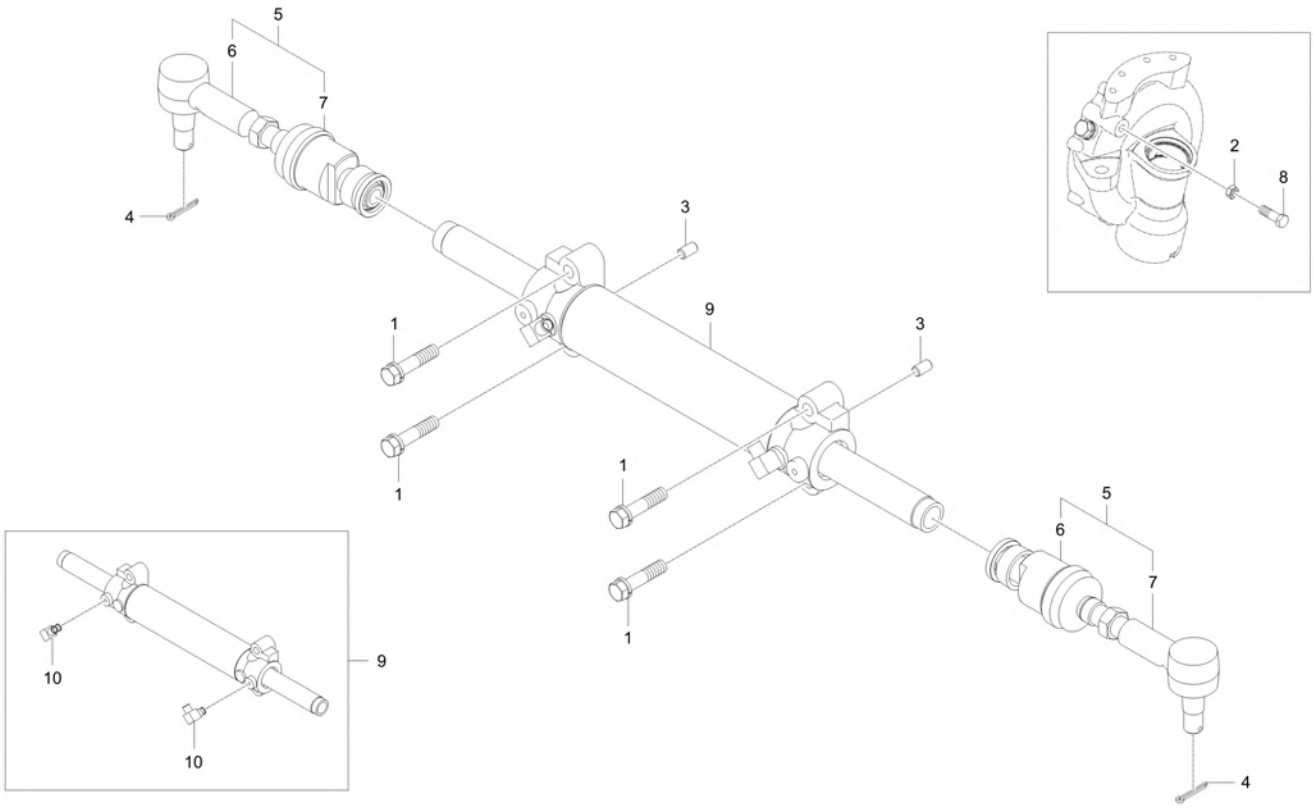

A : DK4510

No.	Part Number	Description	Qty A	Qty B	Qty C	Qty D	Qty E	I.C	Remark
1	01133-51255	BOLT	4						
2	02076-50140	NUT	2						M14XP1.5
3	05012-01016	PIN, DOWEL	2						
4	05511-50335	PIN, SPLIT	2						DIA3*35
5	T4115-63602	BALL JOINT ASSY dnr v	2						
5	T4115-63603	BALL JOINT ASSY v	2 TR7600121 ~ WR7600192					<----->	
6	T4115-63612	ASSY RACK END dnr v	1						
6	T4115-63613	ASSY, RACK END v	1					<----->	
7	T4520-63624	TIE ROD ASSY v	1						
7	T4520-63625	TIE ROD ASSY v	1					<----->	
8	T4520-43941	BOLT,SET	2						
9	T5715-45201	CYLINDER ASSY	1						
10	T5715-45201012	ELBOW, PORT	1						

----> Old replace New
<---- New replace Old
<-X-> Not interchangeable
<---> Interchangeable
<-O-> Interchangeable with another part(s)
* Please place an order assy(*)

https://tractormanualz.com/

TD2-G322001 **STEERING CYLINDER COVER GROUP**

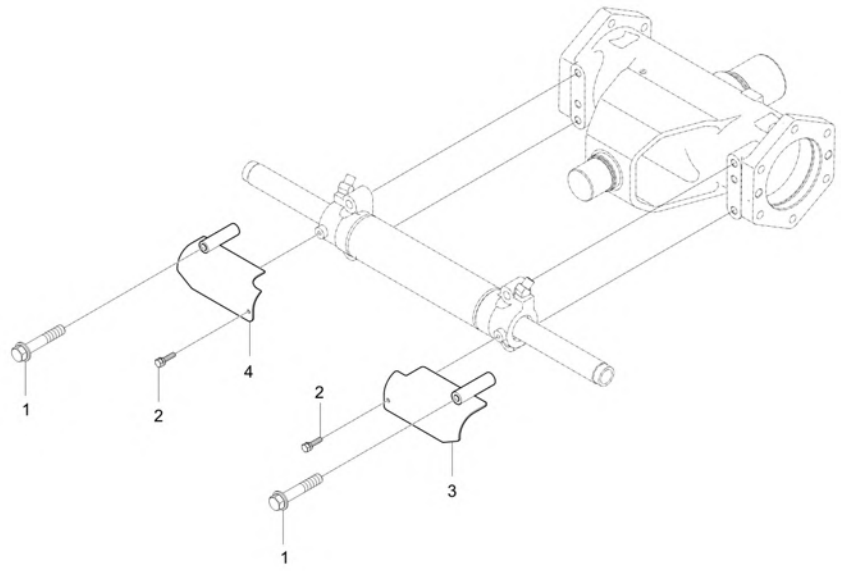

A : DK4510

No.	Part Number	Description	Qty A	Qty B	Qty C	Qty D	Qty E	I.C	Remark
1	01133-51090	BOLT	2						P1.25
2	01754-50610	BOLT, FLANGE	2						M6XP1.0
3	T4115-31331BB	COVER, CYLINDER(LH)	1						
4	T4115-31341BB	COVER,CYLINDER(RH)	1						

----> Old replace New <---- New replace Old <-X-> Not interchangeable
<---> Interchangeable <-O-> Interchangeable with another part(s)
* Please place an order assy(*)

https://tractormanualz.com/

TD2-G332001

FRONT AXLE BRACKET GROUP

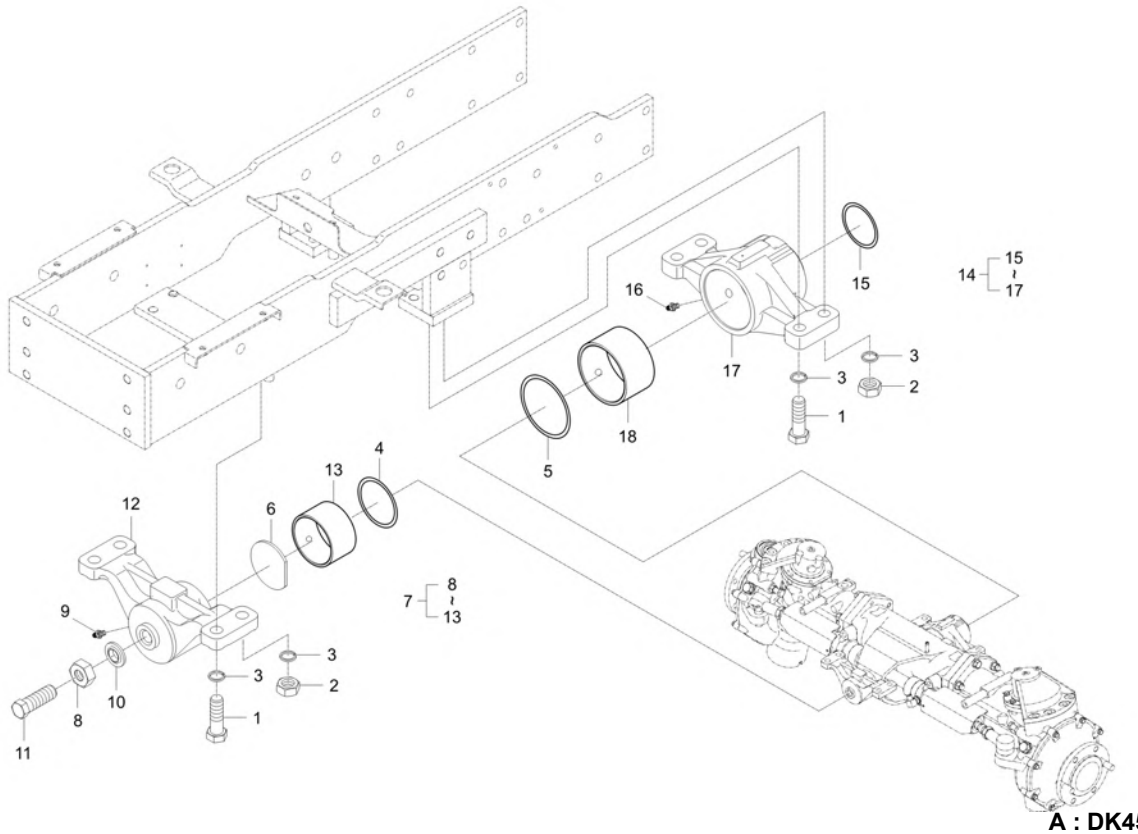

A : DK4510

No.	Part Number	Description	Qty A	Qty B	Qty C	Qty D	Qty E	I.C	Remark
1	01176-51440	BOLT	4						M14*1.5*40
2	02176-50140	NUT	4						M14XP1.5
3	04512-50140	SPRING WASHER	8						
4	04811-00490	O RING	1						
5	04811-50700	O RING	1						
6	38440-4467-3	COLLAR	1						
7	T4125-41601	FRONT BRAKET ASSEMBLY	1						
7	T4125-41602	FRONTBRAKETASSEMBLY	1					<------	
8	02174-50160	NUT	1						M16XP1.5
9	06613-10010	NIPPLE, GREASE	1						A-M6F
9	06613-20010	NIPPLE, GREASE 45 degree v	1					<------	
10	38440-4475-1	WASHER SEAL	1						
11	38630-4476-1	BOLT	1						DIA16
12	T2630-41612	BRACKET, FRONT	1						
13	T4520-43601	BUSH DX v	1						50-40DX
14	T4125-42602	ASSY REAR BRACKET	1						
14	T4125-42603	REAR BRAKET ASSEMBLY	1					<------	
15	04811-00420	O RING	1						DIA41.7

----> Old replace New
<---- New replace Old
<-X-> Not interchangeable
<---> Interchangeable
<-O-> Interchangeable with another part(s)
* Please place an order assy(*)

https://tractormanualz.com/

TD2-G332001

FRONT AXLE BRACKET GROUP

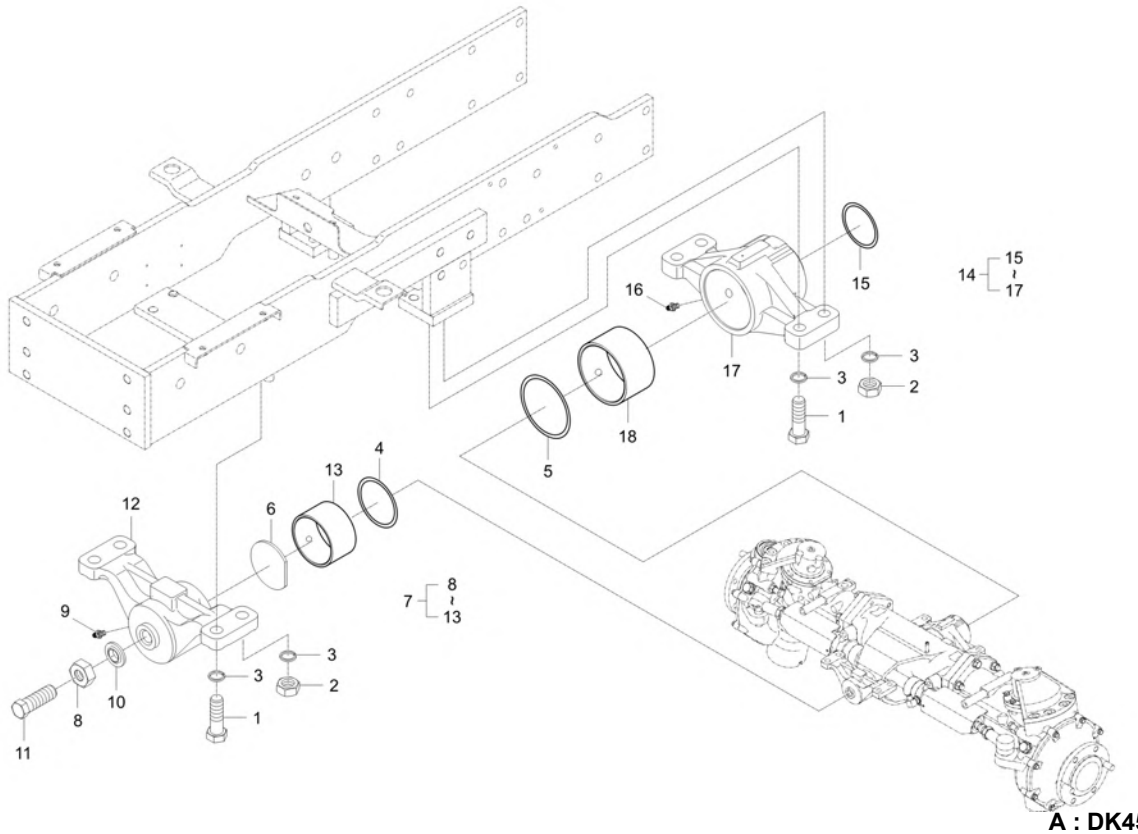

A : DK4510

No.	Part Number	Description	Qty A	Qty B	Qty C	Qty D	Qty E	I.C	Remark
16	06613-10010	NIPPLE, GREASE	1						A-M6F
16	06613-20010	NIPPLE, GREASE 45 degree v	1					<------	
17	T2630-41622	BRACKET, REAR	1						
18	T2630-41691	BUSH DX	1						

----> Old replace New
<---- New replace Old
<-X-> Not interchangeable
<---> Interchangeable
<-O-> Interchangeable with another part(s)
* Please place an order assy(*)

https://tractormanualz.com/

TD2-G331001

PROPELLER SHAFT GROUP

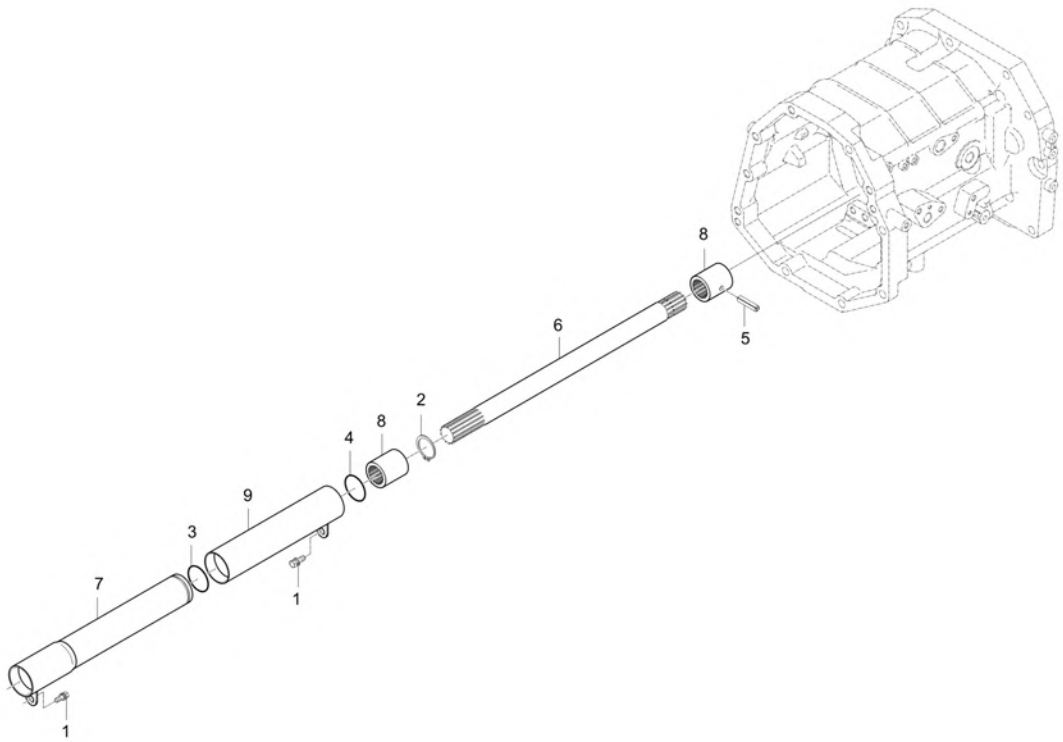

A : DK4510

No.	Part Number	Description	Qty A	Qty B	Qty C	Qty D	Qty E	I.C	Remark
1	01123-50816	Hex Head Cap Screw	2						M8XP1.25
2	04612-00250	CIR-CLIP	1						
3	04811-06350	O RING	1						
4	04811-06420	O RING	1						
5	05411-00635	PIN, SPRING	1						DIA5*36
6	T2630-44581	SHAFT 2,PROPELLER	1						DIA25
7	T2630-44602	COVER 1, PROPELLER SHAFT	1						
8	T4620-44592	COUPLING	2						
9	T4681-44611	COVER 1,PROPELLER v	1						

----> Old replace New <---- New replace Old <-X-> Not interchangeable
<---> Interchangeable <-O-> Interchangeable with another part(s)
* Please place an order assy(*)

https://tractormanualz.com/

TD2-G341004

FRONT WHEEL GROUP

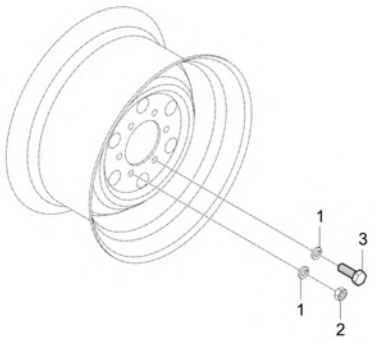

A : DK4510

No.	Part Number	Description	Qty A	Qty B	Qty C	Qty D	Qty E	I.C	Remark
1	04512-50160	WASHER, SPRING	12						M16
2	02076-50160	NUT	4						
3	01073-51630	BOLT v	8						M16XP1.5

----> Old replace New
<---- New replace Old
<-X-> Not interchangeable
<---> Interchangeable
<-O-> Interchangeable with another part(s)
* Please place an order assy(*)

https://tractormanualz.com/

TD2-G411001

SUCTION LINE GROUP

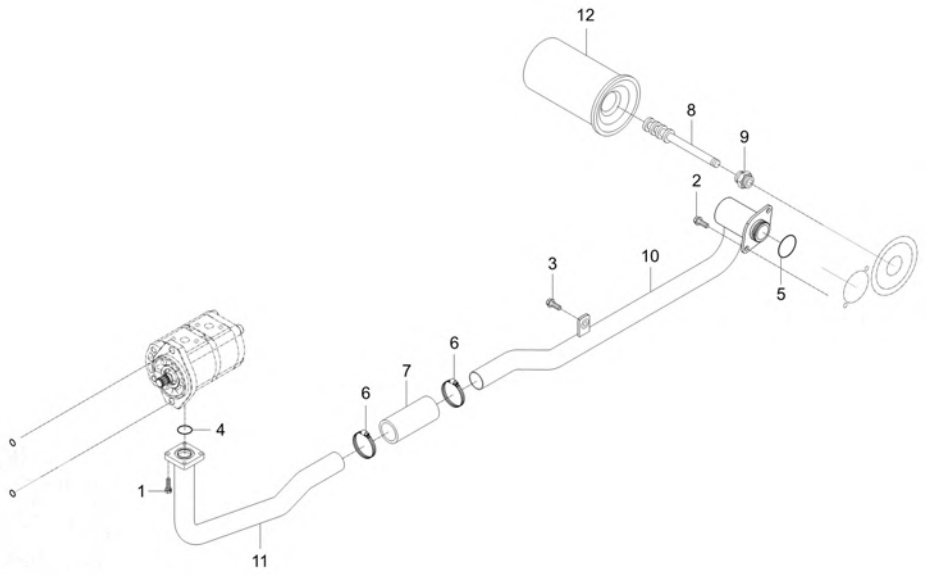

A : DK4510

No.	Part Number	Description	Qty A	Qty B	Qty C	Qty D	Qty E	I.C	Remark
1	01023-50620	BOLT, WASHER	4						M6XP1.0
2	01123-50820	BOLT, WASHER v	2						M8XP1.25
3	01127-50820	BOLT	1						
4	04810-00280	O RING	1						
5	04810-00320	O RING v	1						
6	T4340-38231	BAND, HOSE	2 ~ TR7600098						스탠45#
6	CE11-0011A	CLAMP, HOSE STAINLESS 32-50	2 TR7600099 ~ WR7600104					<----->	32-50mm
7	T4520-38151	HOSE, INLET	1						
8	T4810-46751	MAGNETIC ASS`Y	1						
9	T4810-46762	JOINT CARTRIDGE	1						
10	T5710-36511	TUBE, INLET	1						
11	T5710-36612	TUBE	1						
12	T5710-38031	FILTER, HYD	1						100 micrometer

----> Old replace New <---- New replace Old <-X-> Not interchangeable
<---> Interchangeable <-O-> Interchangeable with another part(s)
* Please place an order assy(*)

https://tractormanualz.com/

TD2-G412001

GEAR PUMP GROUP

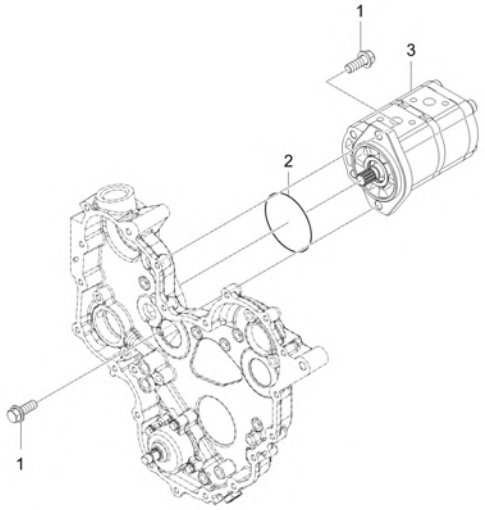

A : DK4510

No.	Part Number	Description	Qty A	Qty B	Qty C	Qty D	Qty E	I.C	Remark
1	01133-51030	WITH WASHER BOLT	2						M10XP1.25
2	04811-10800	O-RING	1						
3	T5710-34001	ASS'Y PUMP, HYDRAULIC O-P	1						
3	TD24-0179A	PUMP, GEAR	1 UR7600101 ~ WR7600104					<--O-->	

----> Old replace New
<---> Interchangeable
* Please place an order assy(*)
<---- New replace Old
<-O-> Interchangeable with another part(s)
<-X-> Not interchangeable

https://tractormanualz.com/

TD2-G421007

MODULATE VALVE GROUP

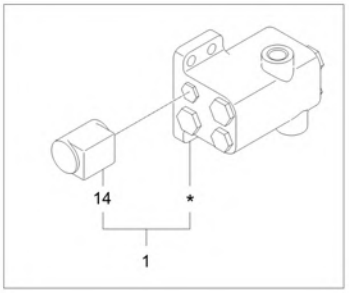

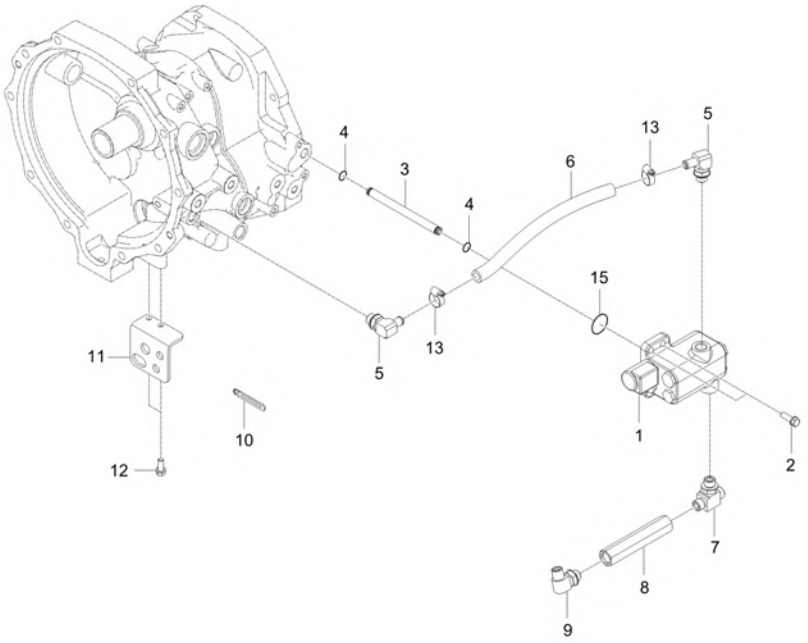

A : DK4510

No.	Part Number	Description	Qty A	Qty B	Qty C	Qty D	Qty E	I.C	Remark
1	T5715-35672	MODULATE VALVE	1						
1	T4180-34041	ASS'Y, MOD. VALVE	1					<--O-->	
1	TD24-0249A	VALVE, MODULATOR	1 VR7600307 ~ WR7600104					<------	
2	01123-50880	WASHER BOLT	3						M8*1.25
2	01123-50825	BOLT WITH WASHER	3					<--O-->	M8XP1.25
3	T5710-31122	TUBE	1						DIA12
4	04811-00090	O RING	2						
5	T4810-45761	ELBOW	2						
5	T4876-45162	ELBOW	2					<--O-->	
6	T5715-38211	TUBE	1						
6	TD24-0204A	HOSE, DRAIN	1					<--O-->	
7	T5310-42561	ELBOW	1						
8	T5710-38411	TUBE, CONNECTING	1						
8	TD24-0208A	CONNECTOR	1					<--O-->	
9	T4850-45161	ELBOW	1						
10	37150-3447-1	WIR'G CLAMP	1						T0.5
11	T5710-38313	SUPPORT, TUBE	1						T4.5
12	01123-50820	BOLT, WASHER v	2						M8XP1.25

----> Old replace New
<---> Interchangeable
* Please place an order assy(*)
<---- New replace Old
<-O-> Interchangeable with another part(s)
<-X-> Not interchangeable

https://tractormanualz.com/

TD2-G421007

MODULATE VALVE GROUP

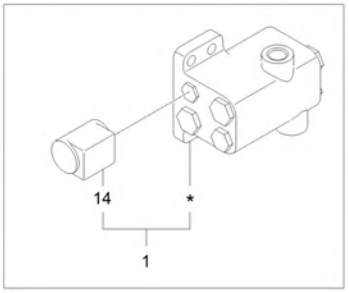

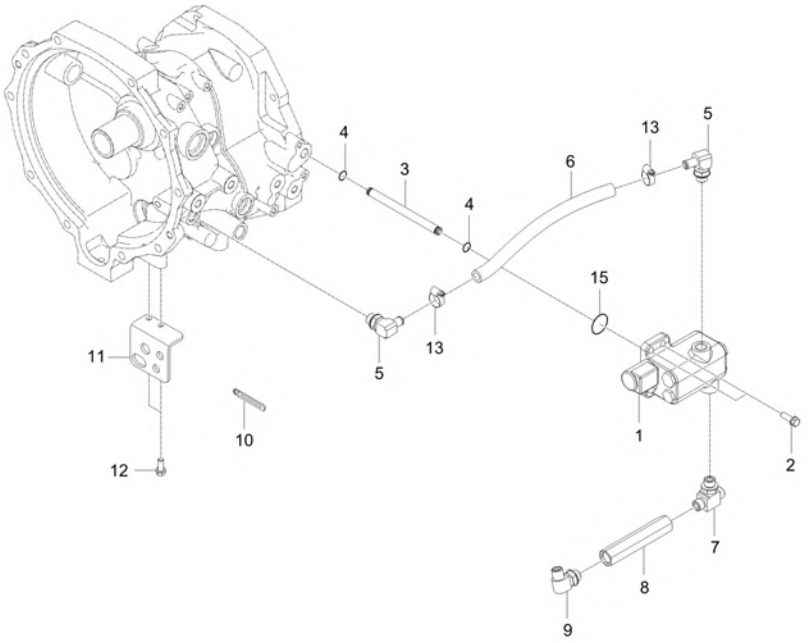

A : DK4510

No.	Part Number	Description	Qty A	Qty B	Qty C	Qty D	Qty E	I.C	Remark
13	F6800-91851	BAND, HOSE	2						12-22mm
14	M301260	SOLENOID COIL (PTO)	1						
15	04810-00260	O RING	1						

----> Old replace New
<---> Interchangeable
* Please place an order assy(*)
<---- New replace Old
<-O-> Interchangeable with another part(s)
<-X-> Not interchangeable

https://tractormanualz.com/

TD2-G431001 POWER STEERING UNIT GROUP

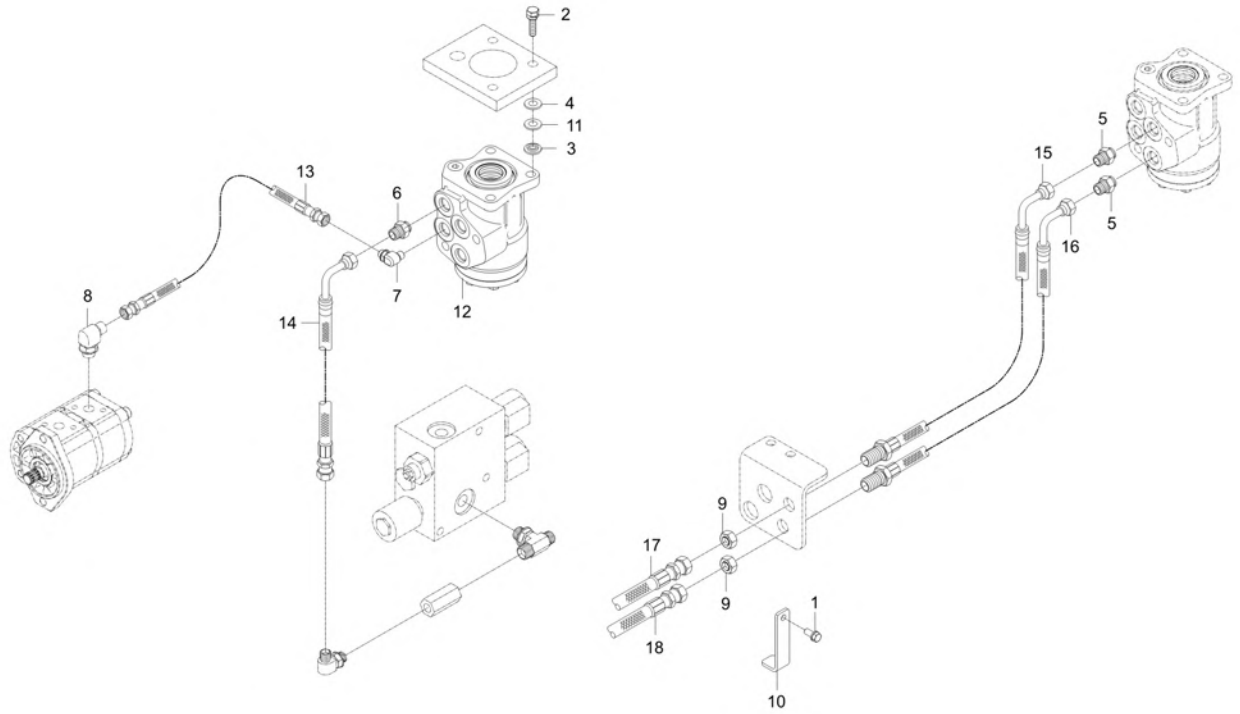

A : DK4510

No.	Part Number	Description	Qty A	Qty B	Qty C	Qty D	Qty E	I.C	Remark
1	01123-50816	Hex Head Cap Screw	1						M8XP1.25
2	01133-51040	WASHER BOLT v	3						M10XP1.25X 40
2	01133-51025	BOLT	3					<--O-->	M10XP1.25
3	55611-5711-1	CAP 2, BEARING	3						T1.0
4	62411-3313-1	WASHER	3						
5	T4620-66161	CONNECTOR	2						PF1/4
6	T4810-46971	CONNECTOR	1						
7	T4850-45161	ELBOW	1						
8	T4850-45161	ELBOW	1						
9	T4930-47091	NUT	2						-
10	T5270-47072	BRACKET	1						T4.5
11	T5520-80531	BUSHING	4						
12	T5710-36001	TURN SIGNAL CONTROL UNIT	1						
13	T5710-36102	HOSE	1						
14	T5710-36112	HOSE ASSEMBLY	1						
15	T5710-36121	HOSE	1						
16	T5710-36131	HOSE	1						
17	T5710-39211	HOSE ASSEMBLY	1						

----> Old replace New
<---- New replace Old
<-X-> Not interchangeable
<---> Interchangeable
<-O-> Interchangeable with another part(s)
* Please place an order assy(*)

https://tractormanualz.com/

TD2-G431001

POWER STEERING UNIT GROUP

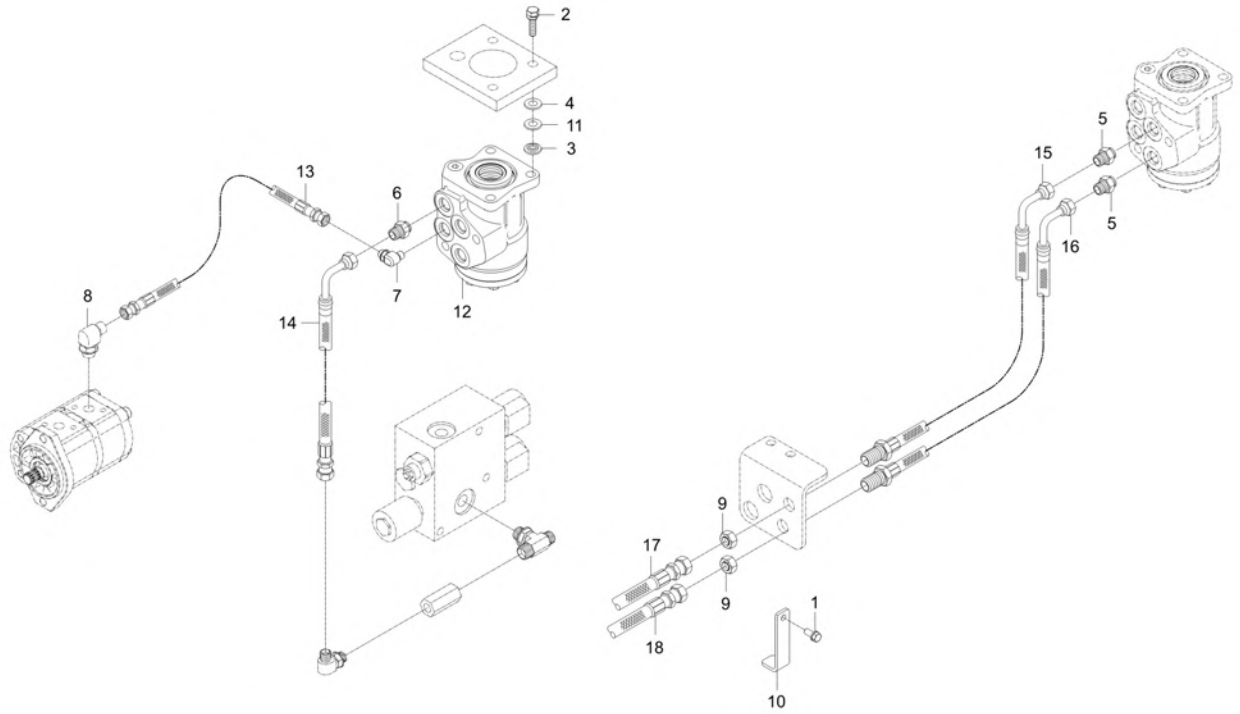

A : DK4510

No.	Part Number	Description	Qty A	Qty B	Qty C	Qty D	Qty E	I.C	Remark
18	T5710-39221	HOSE ASSEMBLY	1						

----> Old replace New
<----> Interchangeable
* Please place an order assy(*)
<---- New replace Old
<-O-> Interchangeable with another part(s)
<-X-> Not interchangeable

https://tractormanualz.com/

TD2-G442004

EXTERNAL DRAW VALVE GROUP

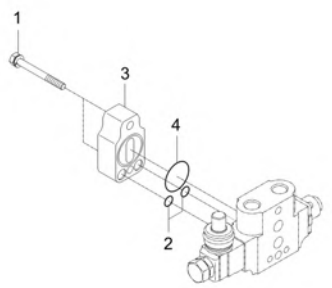

A : DK4510

No.	Part Number	Description	Qty A	Qty B	Qty C	Qty D	Qty E	I.C	Remark
1	01133-51040	WASHER BOLT v	2						M10XP1.25X 40
2	04811-00100	O RING	2						
3	T2610-37482	COVER v	1						
4	04811-10380	O-RING	1						

----> Old replace New
<---> Interchangeable
* Please place an order assy(*)
<---- New replace Old
<-O-> Interchangeable with another part(s)
<-X-> Not interchangeable

https://tractormanualz.com/

TD2-G443001

HYDRAULIC BLOCK GROUP

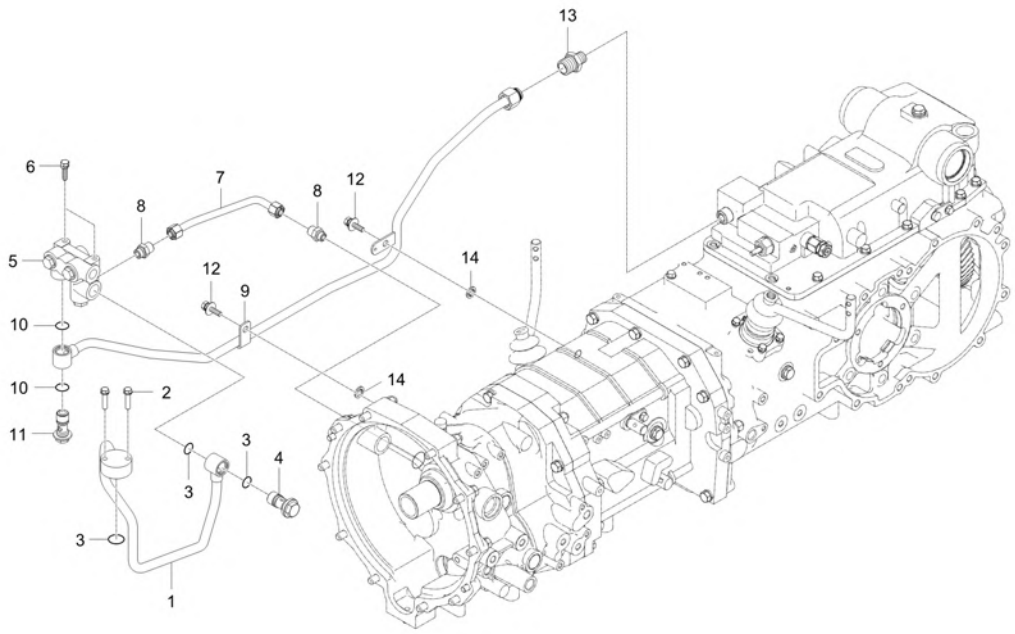

A : DK4510

No.	Part Number	Description	Qty A	Qty B	Qty C	Qty D	Qty E	I.C	Remark
1	T5710-34202	TUBE	1 ~ UR7600100						
1	TD24-0202A	TUBE, HYD-J1	1 UR7600101 ~ WR7600104					<--O-->	
2	01123-50835	BOLT, WITH WASHER	2						M8X1.25
3	04816-00220	O_RING dnr v	3						DIA21.8
3	04817-00220	O RING	3					<----->	DIA21.8
4	T4835-46591	BOLT, JOINT	1						
4	TD24-0253A	BOLT, JOINT	1					<----->	
5	T5710-36601	ASSY,HYD.BLOCK	1						
6	01123-50825	BOLT WITH WASHER	2						M8XP1.25
7	T5710-36211	TUBE	1						
8	T4810-47131	CONNECTOR v	2						
9	T5710-36022	TUBE dnr v	1 PR7600001 ~ UR7600100						
9	T5710-36023	HYDRAULIC TUBE J2 v	1 UR7600101 ~ WR7600104					<--O-->	
10	04816-00220	O_RING dnr v	2						DIA21.8
10	04817-00220	O RING	2					<----->	DIA21.8
11	T4835-46591	BOLT, JOINT	1						
11	TD24-0253A	BOLT, JOINT	1					<----->	
12	01127-50820	BOLT	2						

----> Old replace New
<---- New replace Old
<-X-> Not interchangeable
<---> Interchangeable
<-O-> Interchangeable with another part(s)
* Please place an order assy(*)

https://tractormanualz.com/

TD2-G443001

HYDRAULIC BLOCK GROUP

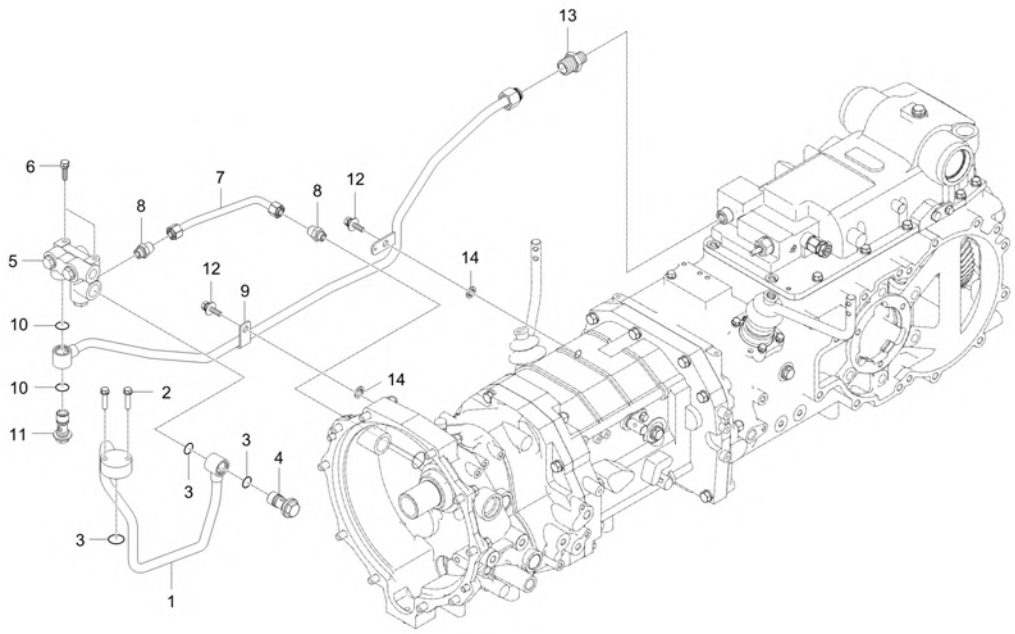

A : DK4510

No.	Part Number	Description	Qty A	Qty B	Qty C	Qty D	Qty E	I.C	Remark
13	T4935-46941	CONNECTION	1						UNS1-14
14	T5520-80531	BUSHING	2						

----> Old replace New
<----> Interchangeable
* Please place an order assy(*)
<---- New replace Old
<-O-> Interchangeable with another part(s)
<-X-> Not interchangeable

https://tractormanualz.com/

TD2-G461001 LIFT CONTROL VALVE(MEC) GROUP

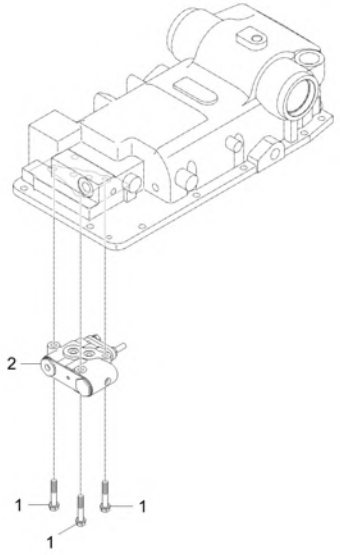

A : DK4510

No.	Part Number	Description	Qty A	Qty B	Qty C	Qty D	Qty E	I.C	Remark
1	01123-50845	BOLT, WASHER v	3						M8*P1.25
2	T5710-37301	VALVE dnr v	1						
2	T5710-37302	VALVE v	1 SR7600015 ~ WR7600192					<----->	

----> Old replace New
<---> Interchangeable
* Please place an order assy(*)
<---- New replace Old
<-O-> Interchangeable with another part(s)
<-X-> Not interchangeable

https://tractormanualz.com/

TD2-G463003

HYDRAULIC CYLINDER GROUP

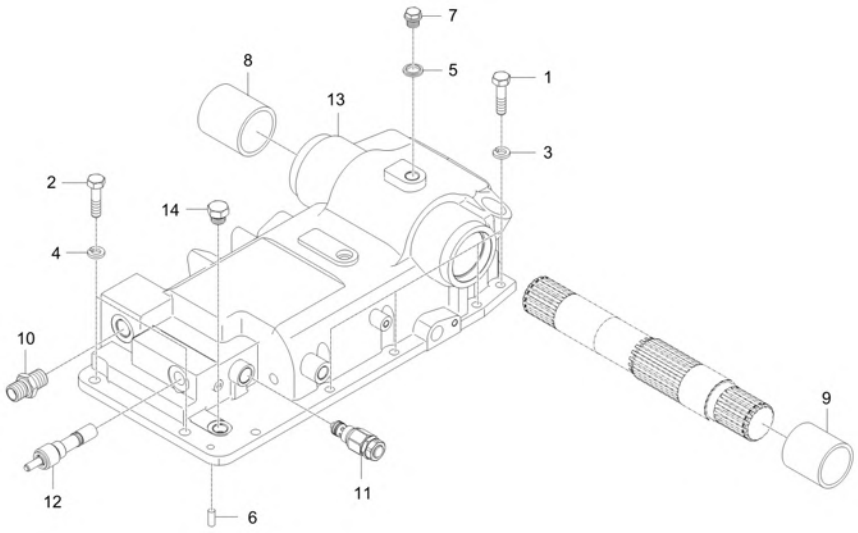

A : DK4510

No.	Part Number	Description	Qty A	Qty B	Qty C	Qty D	Qty E	I.C	Remark
1	01176-51030	BOLT	8						
2	01176-51232	BOLT obs v	3						M12*P1.25*32
3	04512-50100	SPRING WASHER	8						M10
4	04512-50120	SPRING WASHER	3						M12
5	04717-01600	WASHER, SEAL	1						
6	05012-00820	PIN, PARALLEL	1						DIA8*20
7	06331-45016	PLUG M16 P 1.25	1						M16P1.5
8	08511-04550	BUSH	1						
9	08511-05050	BUSH	1						
10	T4935-46941	CONNECTION	1						UNS1-14
11	T5210-37311	ASSY, RELIEF VALVE	1						
12	T5710-37441	FLOWCONTROL VALVE	1						
13	T5715-37113	BODY, POWERLIFT	1						
13	T5715-37114	BODY, POWERLIFT	1					<----->	
13	T5715-37115	BODY, POWERLIFT	1					<----->	
13	T5715-37116	BODY, POWERLIFT	1					<--O-->	
13	T5715-37117	BODY, POWERLIFT	1					<------	
14	TG14-0137A	PLUG	1						

----> Old replace New
<---- New replace Old
<-X-> Not interchangeable
<---> Interchangeable
<-O-> Interchangeable with another part(s)
* Please place an order assy(*)

https://tractormanualz.com/

TD2-G463501

HYDRAULIC CYLINDER GROUP

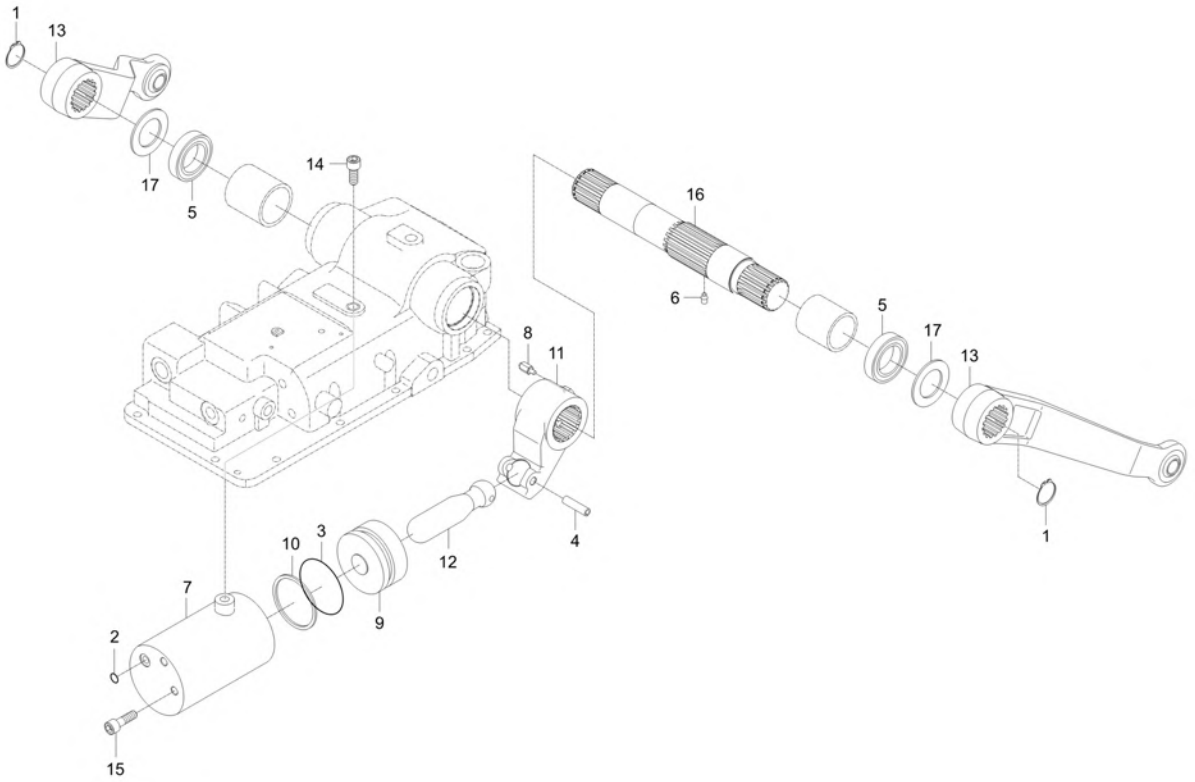

A : DK4510

No.	Part Number	Description	Qty A	Qty B	Qty C	Qty D	Qty E	I.C	Remark
1	04612-00450	RING,SNAP	2						
2	04810-00140	O RING	1						P14
3	04810-00750	O RING	1						
3	TD24-0125A	ORING	1					<----->	D75
4	05411-00850	PIN,SPRING	1						8*50
5	09500-45609	SEAL,OIL	2						
6	T2610-37453	SCREW, SET	1						M10*P1.5
7	T5710-37132	CYLINDER	1						
8	T5710-37181	ROADPIN	1						
9	T5710-37212	PISTON	1						
10	T5710-37221	BACK-UP RING dnr v	1						
10	T5710-37222	BACK-UP RING	1					<----->	
11	T5710-37231	CRANK	1						
12	T5710-37241	CONNECTING ROD	1						
13	T5710-37281	ASS'Y, LIFT ARM	2						
14	T5710-37511	BOLT, HEXAGON SOCKET	1						
15	T5710-37521	BOLT, HEXAGON SOCKET	1						
16	T5710-37121	SHAFT HYD ARM	1						

----> Old replace New <---- New replace Old <-X-> Not interchangeable
<---> Interchangeable <-O-> Interchangeable with another part(s)
* Please place an order assy(*)

https://tractormanualz.com/

TD2-G463501

HYDRAULIC CYLINDER GROUP

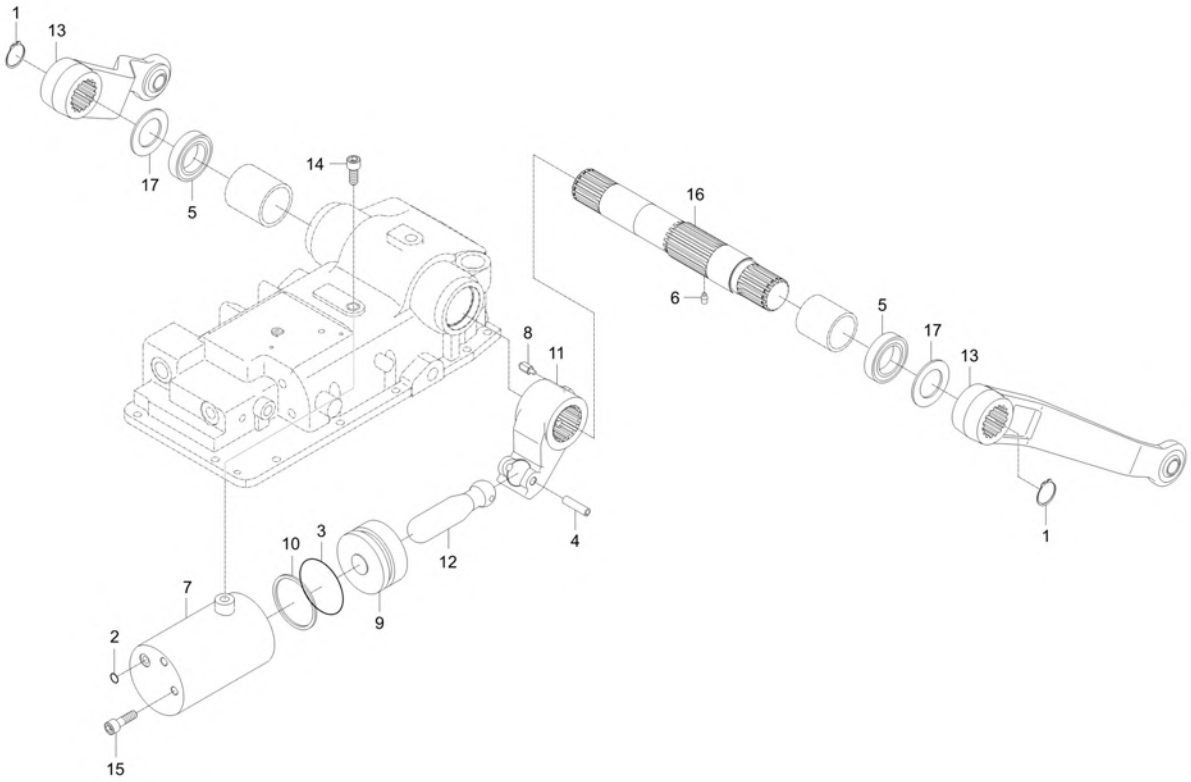

A : DK4510

No.	Part Number	Description	Qty A	Qty B	Qty C	Qty D	Qty E	I.C	Remark
16	TC24-0164A	ARM SHAFT	1					<--O-->	
17	TD24-0008A	WASHER	2						

----> Old replace New
<---> Interchangeable
* Please place an order assy(*)
<---- New replace Old
<-O-> Interchangeable with another part(s)
<-X-> Not interchangeable

https://tractormanualz.com/

TD2-G464001

HYDRAULIC CYLINDER GROUP

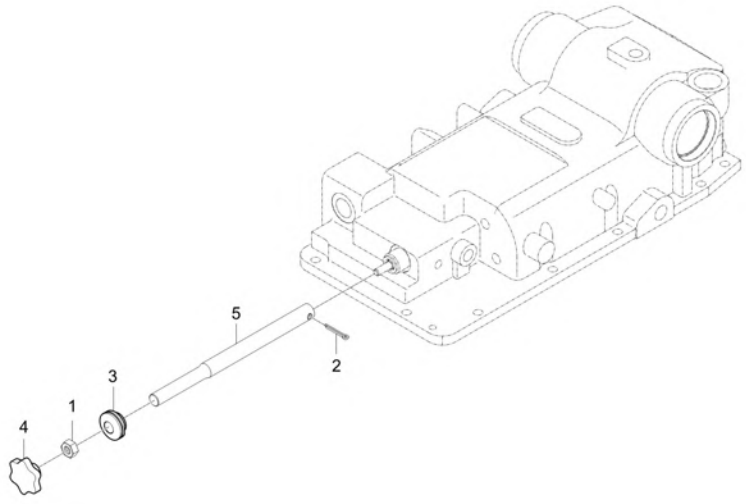

A : DK4510

No.	Part Number	Description	Qty A	Qty B	Qty C	Qty D	Qty E	I.C	Remark
1	02176-50100	NUT v	1						M10XP1.25
2	05511-50420	PIN, SPLIT	1						DIA4*20
3	31355-2949-1	GROMMET	1						
4	T2610-39882	GRIP	1						
5	T5710-38131	ROD	1						DIA12

----> Old replace New
<---> Interchangeable
* Please place an order assy(*)
<---- New replace Old
<-O-> Interchangeable with another part(s)
<-X-> Not interchangeable

https://tractormanualz.com/

TD2-G464502

TOP LINK DEVICE GROUP

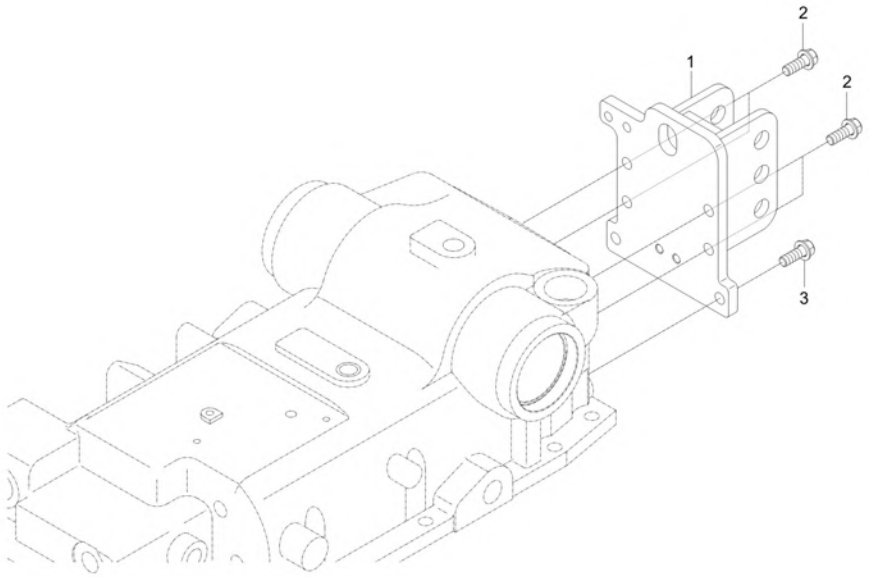

A : DK4510

No.	Part Number	Description	Qty A	Qty B	Qty C	Qty D	Qty E	I.C	Remark
1	T5715-38802	BRACKET, TOP LINK	1						
2	01133-51225	BOLT, WASHER v	4						M12*P1.25
3	01133-51025	BOLT	2						M10XP1.25

----> Old replace New
<----> Interchangeable
* Please place an order assy(*)
<---- New replace Old
<-O-> Interchangeable with another part(s)
<-X-> Not interchangeable

https://tractormanualz.com/

TD2-G465001

OIL INLET TUBE GROUP

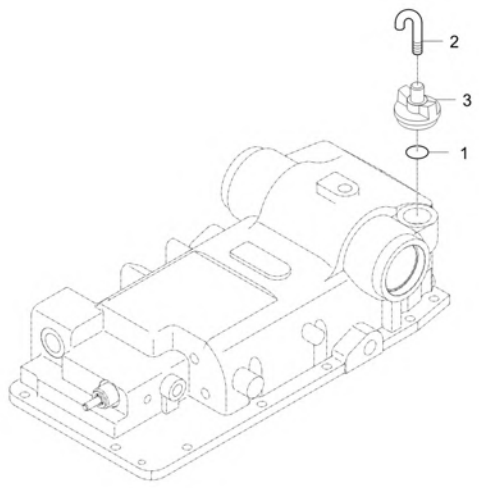

A : DK4510

No.	Part Number	Description	Qty A	Qty B	Qty C	Qty D	Qty E	I.C	Remark
1	04811-50300	O RING v	1						G30
2	31351-3714-2	BREATHER 2	1						N
3	38245-2142-1	AIR BREATHER	1						

----> Old replace New
<---- New replace Old
<-X-> Not interchangeable
<---> Interchangeable
<-O-> Interchangeable with another part(s)
* Please place an order assy(*)

https://tractormanualz.com/

TD2-G465502

HYDRAULIC SYSTEM GROUP(1)

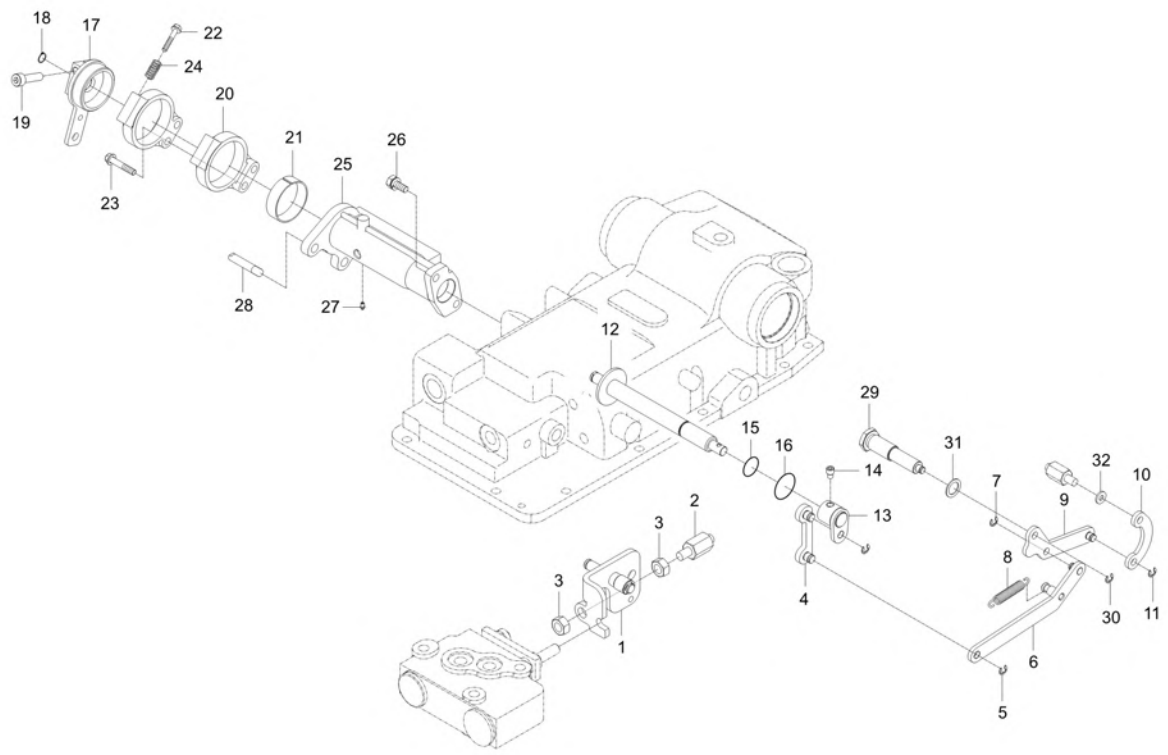

A : DK4510

No.	Part Number	Description	Qty A	Qty B	Qty C	Qty D	Qty E	I.C	Remark
1	T5715-37562	PUSH PLATE ASSY B	1						
2	T5710-37571	PIN	1						
3	02156-50080	NUT v	2						M8XP1.25
4	T5710-32601	LINK	1						
5	04613-50060	RING SNAP	2						
6	T5710-32101	LINK	1						
7	04613-50060	RING SNAP	1						
8	T2305-26641	SPRING, DIFF.LOCK PEDAL	1						DIA1.2
9	T5710-32511	LINK	1						
10	T5710-37961	FEED BACK LINK	1						T4.5
10	TD24-0001A	LINK,FEEDBACK-A	1					<--O-->	T4.5
11	04613-50060	RING SNAP	2						
12	T5715-32401	POSITION CONTROL SHAFT B	1						
13	T5710-39701	POSITION CONTROL LEVER ARM	1						
14	T2610-39572	SCREW, SET	1						M8*P1.25
15	04811-00210	O RING	1						
16	04811-00250	O RING	1						
17	T5710-39202	LEVER	1						

----> Old replace New
<---- New replace Old
<-X-> Not interchangeable
<---> Interchangeable
<-O-> Interchangeable with another part(s)
* Please place an order assy(*)

https://tractormanualz.com/

TD2-G465502

HYDRAULIC SYSTEM GROUP(1)

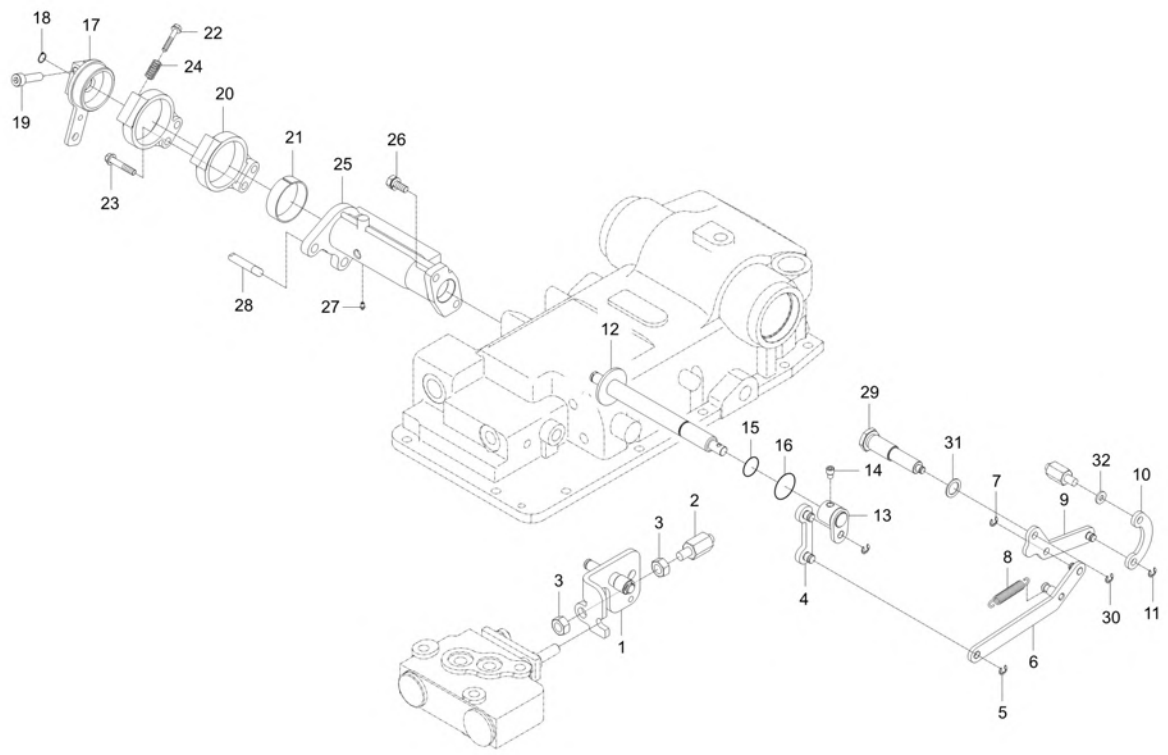

A : DK4510

No.	Part Number	Description	Qty A	Qty B	Qty C	Qty D	Qty E	I.C	Remark
18	04612-00160	SNAP RING v	1						
19	T2610-39252	BOLT	1						M8*1.25
20	T2610-39222	HUB 2,CLUTCH	1						
21	T2610-39202	CLUTCH	1						
22	01053-50645	BOLT v	1						
23	01123-50835	BOLT, WITH WASHER	2						M8X1.25
24	T2610-39233	SPRING	1						DIA2.3
25	T5715-32313	HOLDER, LEVER	1						
26	01123-50820	BOLT, WASHER v	2						M8XP1.25
27	06613-10010	NIPPLE, GREASE	1						A-M6F
28	T2165-39281	STOPPER	2						
29	T5715-39401	SHAFT,SET	1						
30	04613-50060	RING SNAP	1						
31	04724-00180	PACKING	1						
32	TD24-0002A	COLLAR,FRONTAXLESHAFT	1						T1.0

----> Old replace New
<---- New replace Old
<-X-> Not interchangeable
<---> Interchangeable
<-O-> Interchangeable with another part(s)
* Please place an order assy(*)

https://tractormanualz.com/

TD2-G511502

ENGINE ELECTRICAL GROUP(2)

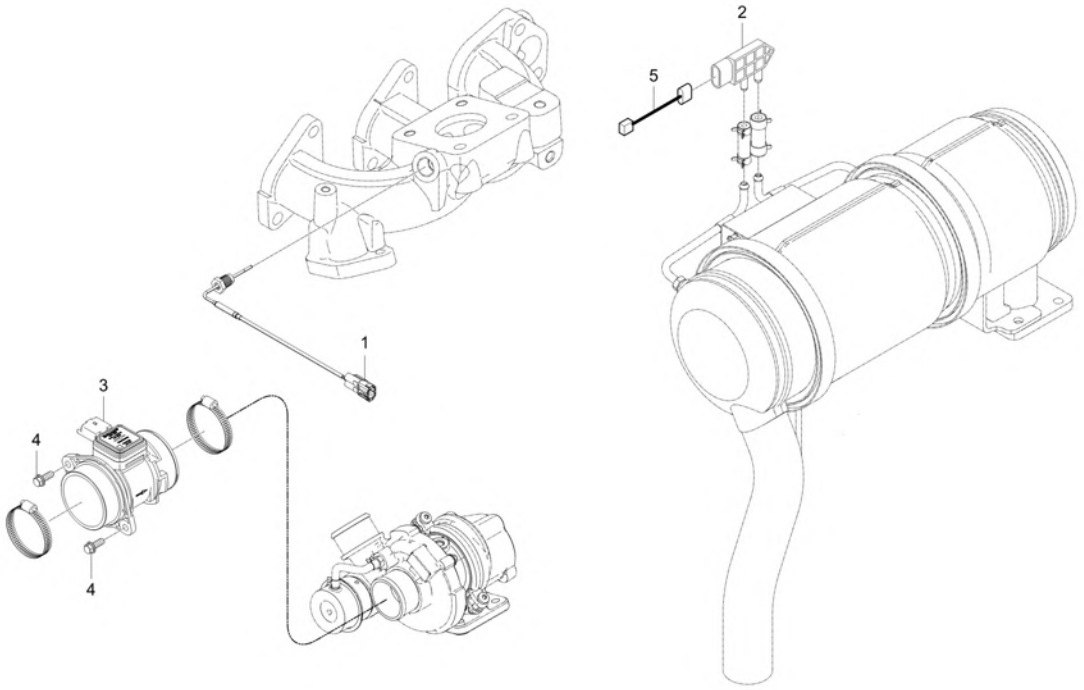

A : DK4510

No.	Part Number	Description	Qty A	Qty B	Qty C	Qty D	Qty E	I.C	Remark
1	F5800-26501	EXHAUST GAS TEMPERATURE SENSOR	1						
2	EF17-0007A	SENSOR, DPF DIFF PRESS	1						
3	F5800-26801	SENSOR, AIR MASS FLOW	1						N
4	01754-50610	BOLT, FLANGE	2						M6XP1.0
5	TD25-0090A	WIRE HARNESS, CONNECTING DPS v	1						

----> Old replace New
<----> Interchangeable
* Please place an order assy(*)
<---- New replace Old
<-O-> Interchangeable with another part(s)
<-X-> Not interchangeable

https://tractormanualz.com/

TD2-G516001

FUEL HEATER OPTION GROUP

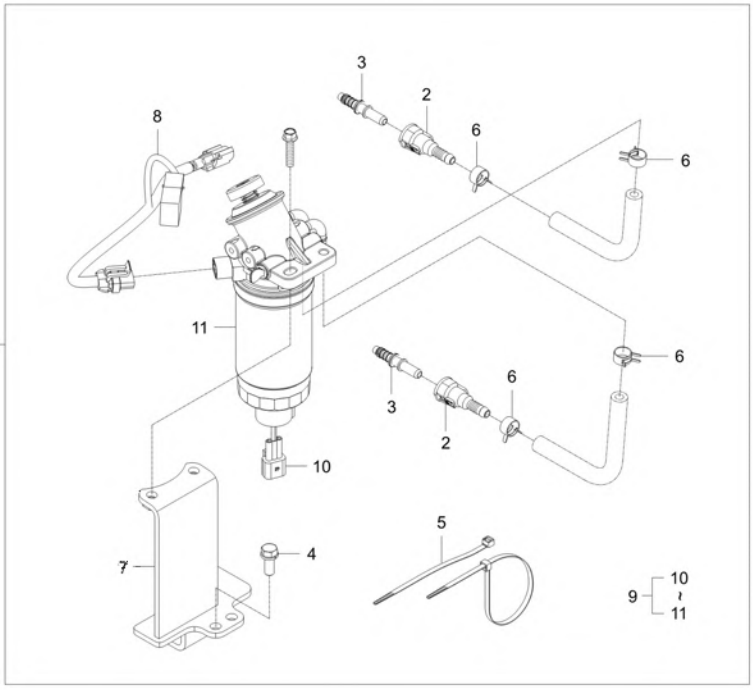

A : DK4510

No.	Part Number	Description	Qty A	Qty B	Qty C	Qty D	Qty E	I.C	Remark
1	T5758-A7072	Fuel Heater Kit	1						
2	F6800-16131	QUICK CONNECTOR	2						-
3	F6800-16181	ADAPTER	2						OD8.4*ID4.7
4	01123-50820	BOLT, WASHER v	2						M8XP1.25
5	T2185-82551	CABLE TIE, BLACK / 300	2						L290
6	09318-88130	CLAMP, HOSE	4						
7	F5835-16142	BRACKET, FUEL-FILTER v	1						-
8	T5758-69341	WIRE,CONNECTION	1						
9	F5800-16403	FILTER, ASSY FUEL	1						
10	F6800-16121	SENSOR, FUEL WATER	1						
11	F6800-16411	FILTER, FUEL v	1						

----> Old replace New <---- New replace Old <-X-> Not interchangeable
<---> Interchangeable <-O-> Interchangeable with another part(s)
* Please place an order assy(*)

https://tractormanualz.com/

TD2-G521002

HEAD LIGHT GROUP

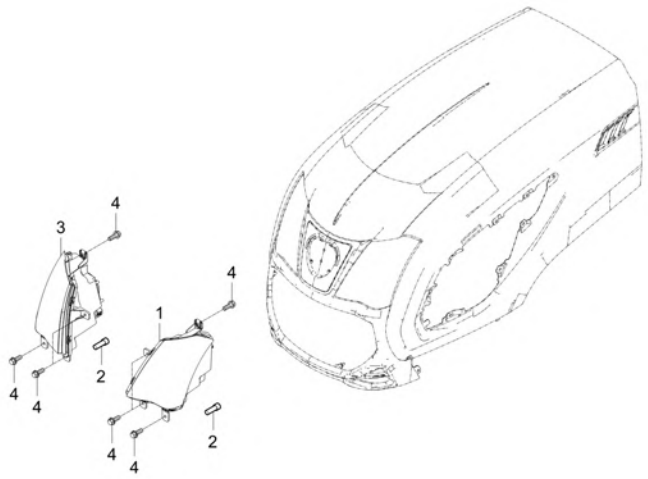

A : DK4510

No.	Part Number	Description	Qty A	Qty B	Qty C	Qty D	Qty E	I.C	Remark
1	T5755-69512	ASSY LAMP,HEAD LH	1						
2	T5755-69571	BULB,LIGHT 27W	1						
3	T5755-69522	ASSY LAMP,HEAD RH	1						
4	01754-50616	BOLT, FLANGE v	8						M6*P1.0

----> Old replace New
<----> Interchangeable
* Please place an order assy(*)
<---- New replace Old
<-O-> Interchangeable with another part(s)
<-X-> Not interchangeable

https://tractormanualz.com/

TD2-G522001

TURN SIGNAL LAMP GROUP

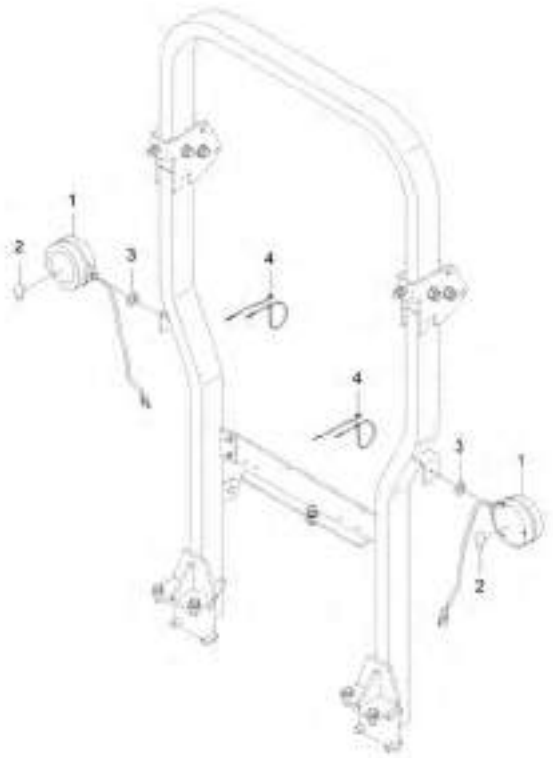

A : DK4510

No.	Part Number	Description	Qty A	Qty B	Qty C	Qty D	Qty E	I.C	Remark
1	T4125-69062	TURN INDICATOR ASSEMBLY	2						
2	T4620-69272	BULB (12V 21W)	1						12V21W (S25S)
3	04512-50100	SPRING WASHER	2						M10
4	T2185-82551	CABLE TIE, BLACK / 300	2						L290

----> Old replace New <---- New replace Old <-X-> Not interchangeable
<---> Interchangeable <-O-> Interchangeable with another part(s)
* Please place an order assy(*)

https://tractormanualz.com/

TD2-G525002

LIGHT CONTROL GROUP

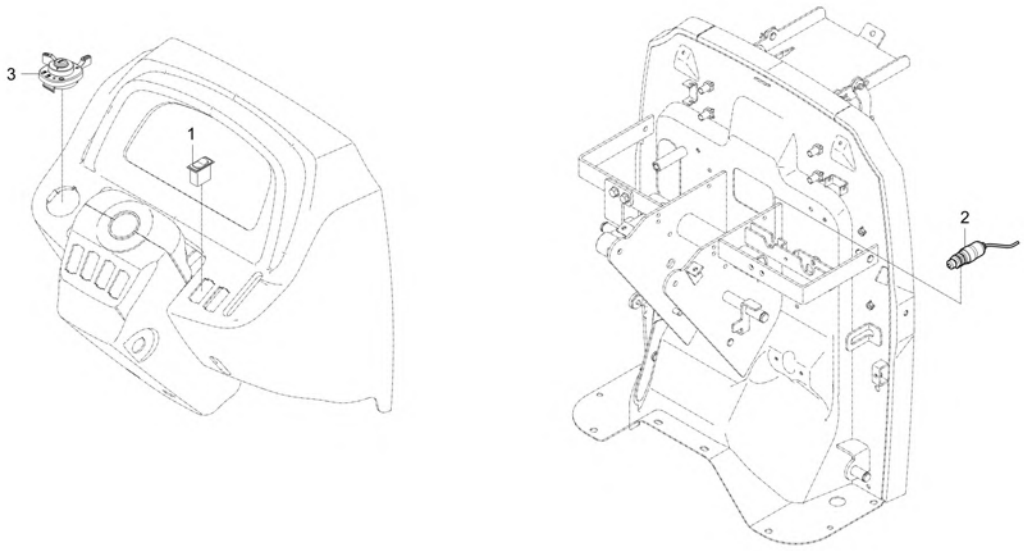

A : DK4510

No.	Part Number	Description	Qty A	Qty B	Qty C	Qty D	Qty E	I.C	Remark
1	T5758-68351	SWITCH, EMERGENCY LAMP	1						
2	T4520-41821	ASSY STOP SWITCH	1						
3	T2555-69022	ASS'Y COMBINATION SWITCH (use T2555-69023) dnr v	1 ~ PR7600007						
3	T2555-69023	ASS'Y COMBINATION SWITCH v	1 PR7600008 ~ WR7600192					<------	
4	T4025-68301	COVER	1						

----> Old replace New
<---> Interchangeable
* Please place an order assy(*)
<---- New replace Old
<-O-> Interchangeable with another part(s)
<-X-> Not interchangeable

https://tractormanualz.com/

TD2-G511002

ENGINE ELECTRICAL GROUP(1)

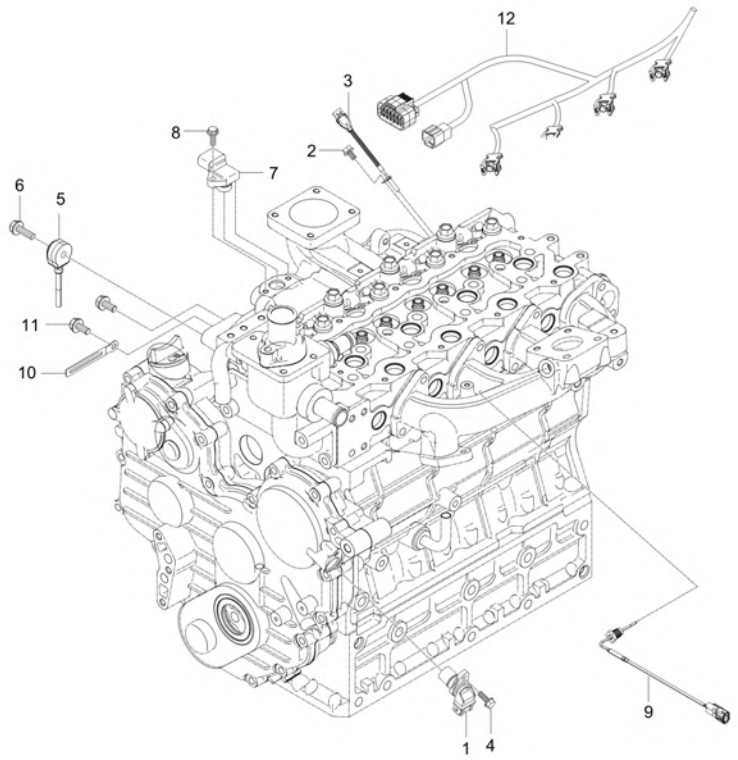

A : DK4510

No.	Part Number	Description	Qty A	Qty B	Qty C	Qty D	Qty E	I.C	Remark
1	F6800-26201	SENSOR, CAMSHAFT WHEEL v	1						
2	01754-50616	BOLT, FLANGE v	1						M6XP1.0
2	01754-50610	BOLT, FLANGE	1					<------	M6XP1.0
3	F6800-26303	SENSOR, CRANKSHAFT WHEEL dnr v	1						
3	EH29-0002A	ASSY SENSOR, CRANKSHAFT WHEEL v	1					<------	
4	01754-50616	BOLT, FLANGE v	1						M6XP1.0
5	F6800-26401	SENSOR, KNOCK	1						
6	01754-50830	BOLT FLANGE	1						M8XP1.25
7	EH19-0003A	ASSY SENSOR, TMAP	1						
8	01754-50616	BOLT, FLANGE v	1						M6XP1.0
9	F5800-26501	EXHAUST GAS TEMPERATURE SENSOR	1						
9	F5800-26502	EXHAUST GAS TEMPERATURE SENSOR	1					<----->	
10	37150-3447-1	WIR'G CLAMP	2						T0.5
10	37150-3447-1	WIR'G CLAMP	1					<------	T0.5
11	01754-50812	BOLT, FLANGE	2						M8XP1.25
12	TE15-0112A	ASSY WIRE HARENESS INJECTOR	1						

----> Old replace New
<---- New replace Old
<-X-> Not interchangeable
<---> Interchangeable
<-O-> Interchangeable with another part(s)
* Please place an order assy(*)

https://tractormanualz.com/

TD2-G511503

ENGINE ELECTRICAL GROUP(2)

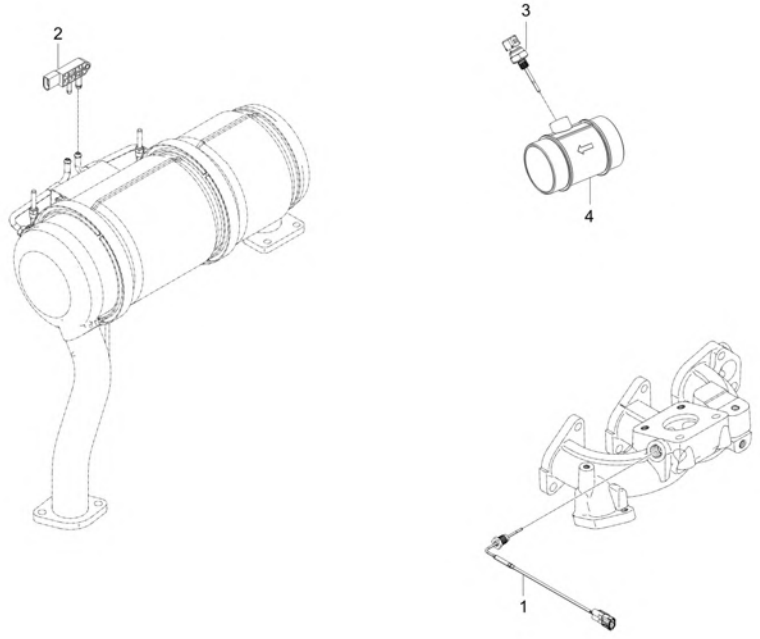

A : DK4510

No.	Part Number	Description	Qty A	Qty B	Qty C	Qty D	Qty E	I.C	Remark
1	F5800-26501	EXHAUST GAS TEMPERATURE SENSOR	1						
1	F5800-26502	EXHAUST GAS TEMPERATURE SENSOR	1					<----->	
2	EF17-0007A	SENSOR, DPF DIFF PRESS	1						
3	EH19-0004A	ASSY SENSOR, INTAKE AIR TEMP-T1	1						
4	EH39-0002A	HOUSING-INTAKE TEMP SENSOR	1						
4	EH39-0002B	HOUSING-INTAKE TEMP SENSOR	1					<----->	

----> Old replace New
<----> Interchangeable
* Please place an order assy(*)
<---- New replace Old
<-O-> Interchangeable with another part(s)
<-X-> Not interchangeable

https://tractormanualz.com/

TD2-G512001

ENGINE ELECTRICAL GROUP(3)

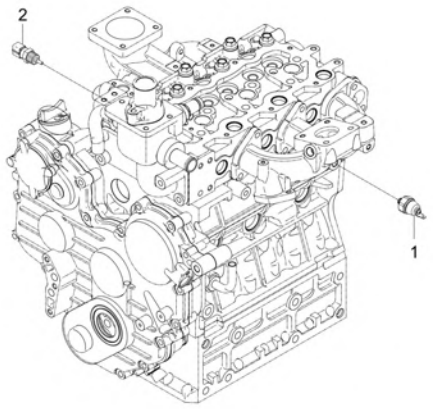

A : DK4510

No.	Part Number	Description	Qty A	Qty B	Qty C	Qty D	Qty E	I.C	Remark
1	E5500-39013	OIL SWITCH	1						
2	E7240-32731	TEMPERATURE SENSOR ASSY	1						

----> Old replace New
<---- New replace Old
<-X-> Not interchangeable
<---> Interchangeable
<-O-> Interchangeable with another part(s)
* Please place an order assy(*)

https://tractormanualz.com/

TD2-G513003

STARTER MOTOR GROUP

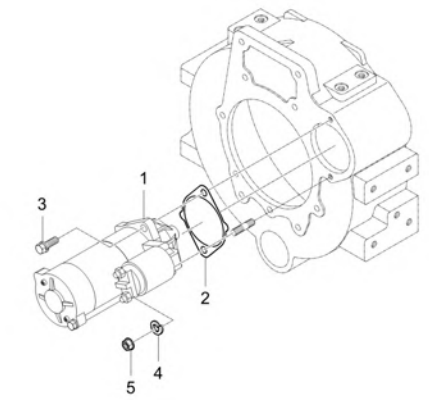

A : DK4510

No.	Part Number	Description	Qty A	Qty B	Qty C	Qty D	Qty E	I.C	Remark
1	E6864-63011	ASSY STARTER	1						12V 1.7KW
2	E6200-04623	GASKET v	1						T0.5
3	01133-51030	WITH WASHER BOLT	1						M10XP1.25
4	04512-50100	SPRING WASHER	1						M10
5	02176-50100	NUT v	1						M10XP1.25

----> Old replace New
<---- New replace Old
<-X-> Not interchangeable
<---> Interchangeable
<-O-> Interchangeable with another part(s)
* Please place an order assy(*)

https://tractormanualz.com/

TD2-G513501

BATTERY GROUP

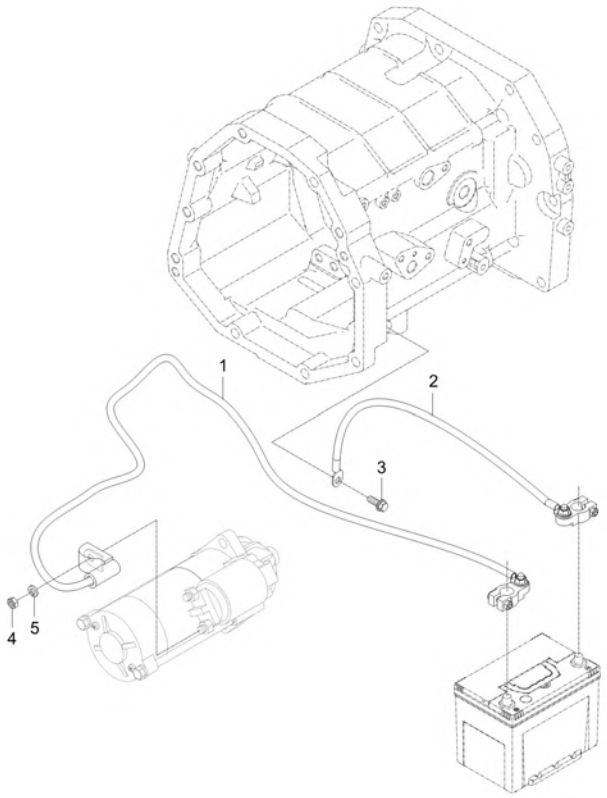

A : DK4510

No.	Part Number	Description	Qty A	Qty B	Qty C	Qty D	Qty E	I.C	Remark
1	T5710-69161	CABLE, BATTERY	1						
2	T5710-69614	WIRE,BATTERY (-)	1 RR7600055 ~ VR7600236						
2	T5710-69615	WIRE,BATTERY (-)	1 VR7600237 ~ WR7600104					<------	
3	01754-50812	BOLT, FLANGE	1						M8XP1.25
4	02156-50080	NUT v	1						M8XP1.25
5	04512-50080	SPRING WASHER	1						M08

----> Old replace New
<---> Interchangeable
* Please place an order assy(*)
<---- New replace Old
<-O-> Interchangeable with another part(s)
<-X-> Not interchangeable

https://tractormanualz.com/

TD2-G514001

ALTERNATOR GROUP

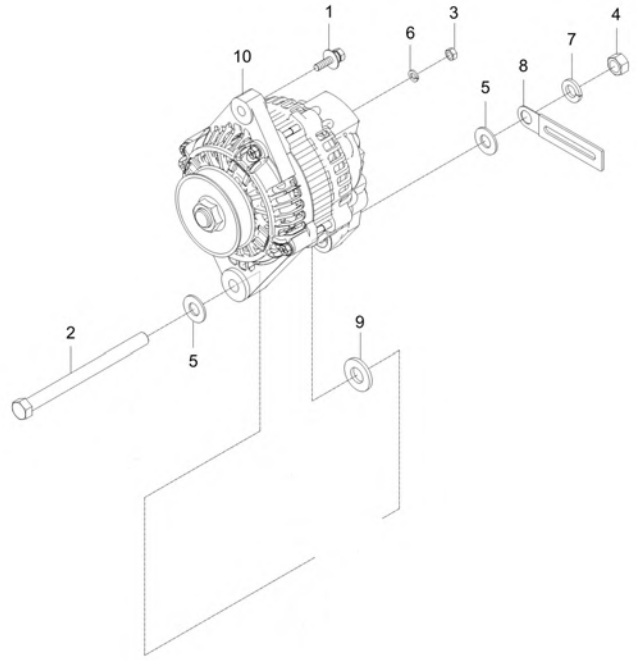

A : DK4510

No.	Part Number	Description	Qty A	Qty B	Qty C	Qty D	Qty E	I.C	Remark
1	01127-50825	BOLT	1						M8XP1.25
2	01774-51003	FLANGE_BOLT	1						M10XP1.25
3	02156-50080	NUT v	1						M8XP1.25
4	02176-50100	NUT v	1						M10XP1.25
5	04013-50100	PLAIN WASHER	2						M10
6	04512-50080	SPRING WASHER	1						M08
7	04512-50100	SPRING WASHER	1						M10
8	37155-3447-1	CLAMP,CORD	1						-
9	F5800-64101	COLLAR	1 ~ SR7600064						
9	E5800-64102	SPACER	1 SR7600065 ~ WR7600192					<------	DIA24*T5.15
10	E7251-64011	ALTERNATOR ASSY 75AMP v	1						
10	E7251-64012	ALTERNATOR 75A	1					<------	

----> Old replace New
<---- New replace Old
<-X-> Not interchangeable
<---> Interchangeable
<-O-> Interchangeable with another part(s)
* Please place an order assy(*)

https://tractormanualz.com/

TD2-G514501

GLOW CONTROL GROUP

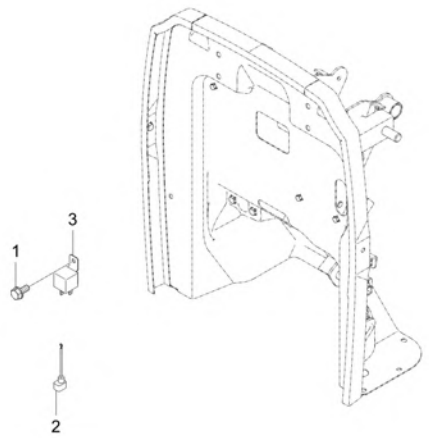

A : DK4510

No.	Part Number	Description	Qty A	Qty B	Qty C	Qty D	Qty E	I.C	Remark
1	01754-50610	BOLT, FLANGE	1						M6XP1.0
2	T2198-69471	HARNESS WIRE 3, CABLE	1						
3	T5535-69951	RELAY 4P v	1						Bracket

----> Old replace New
<----> Interchangeable
* Please place an order assy(*)
<---- New replace Old
<-O-> Interchangeable with another part(s)
<-X-> Not interchangeable

https://tractormanualz.com/

TD2-G515002

START CONTROL GROUP

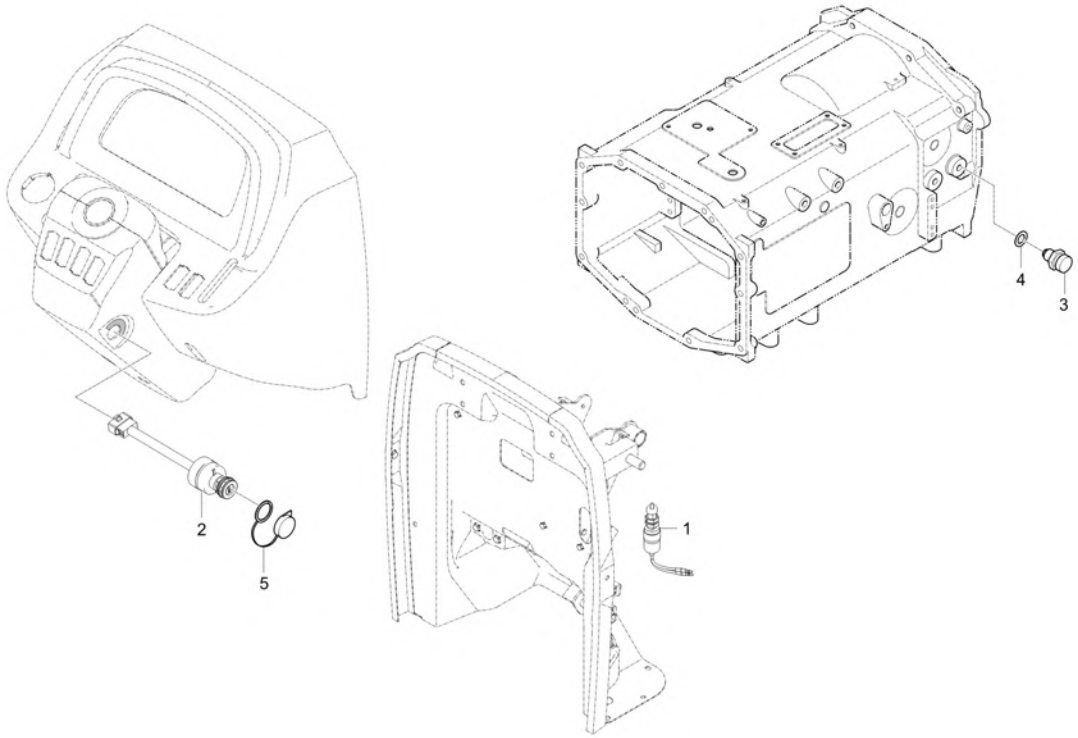

A : DK4510

No.	Part Number	Description	Qty A	Qty B	Qty C	Qty D	Qty E	I.C	Remark
1	T4520-75481	SWITCH,SAFETY STARTER	1						
2	T5520-75171	ASSY SWITCH, STARTER v	1						
3	T5210-69401	ASSY SWITCH SAFETY v	1						
4	T4682-43571	COLLAR 1.0T, ADJUSTING	1						T1.0
5	T4837-77774	COVER, STARTER SWITCH PROOF WATER	1						

----> Old replace New
<---- New replace Old
<-X-> Not interchangeable
<---> Interchangeable
<-O-> Interchangeable with another part(s)
* Please place an order assy(*)

https://tractormanualz.com/

TD2-G515503

SAFETY STARTER GROUP

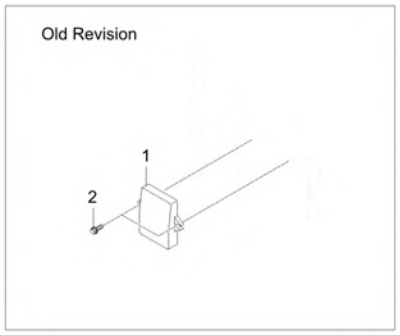

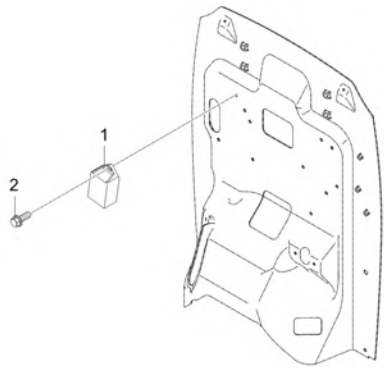

A : DK4510

No.	Part Number	Description	Qty A	Qty B	Qty C	Qty D	Qty E	I.C	Remark
1	TD25-0114B	UNIT, SAFETY CONTROL	1						
2	01754-50620	BOLT, FLANGE	1						

----> Old replace New
<----> Interchangeable
* Please place an order assy(*)
<---- New replace Old
<-O-> Interchangeable with another part(s)
<-X-> Not interchangeable

https://tractormanualz.com/

TD2-G516002

FUEL HEATER GROUP

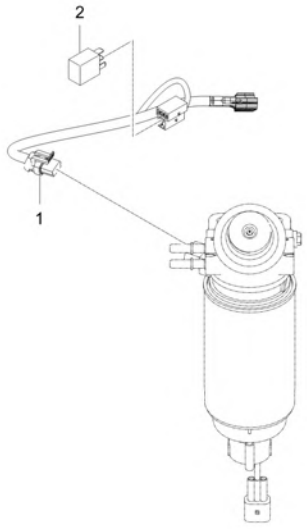

A : DK4510

No.	Part Number	Description	Qty A	Qty B	Qty C	Qty D	Qty E	I.C	Remark
1	T5758-69341	WIRE,CONNECTION	1						
2	T5710-69961	RELAY(4P)	1						

----> Old replace New
<----> Interchangeable
* Please place an order assy(*)
<---- New replace Old
<-O-> Interchangeable with another part(s)
<-X-> Not interchangeable

https://tractormanualz.com/

TD2-G522002

TURN SIGNAL LAMP GROUP

(DK4510 : TR7600069 ~)

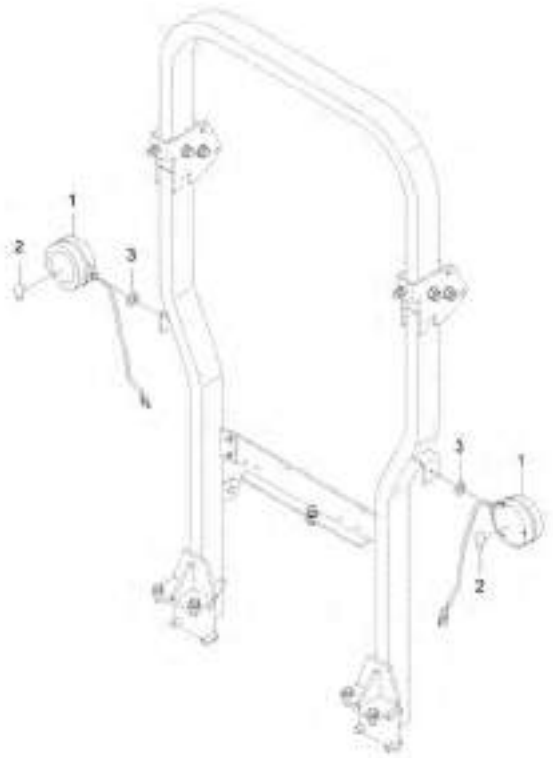

A : DK4510

No.	Part Number	Description	Qty A	Qty B	Qty C	Qty D	Qty E	I.C	Remark
1	TB25-0009A	ASSY LAMP, TURN SIGNAL	2						
2	TB25-0010A	BULB-27W	1						
3	04512-50100	SPRING WASHER	2						M10

----> Old replace New
<----> Interchangeable
* Please place an order assy(*)
<---- New replace Old
<-O-> Interchangeable with another part(s)
<-X-> Not interchangeable

https://tractormanualz.com/

TD2-G522502

REAR COMBINATION LAMP GROUP

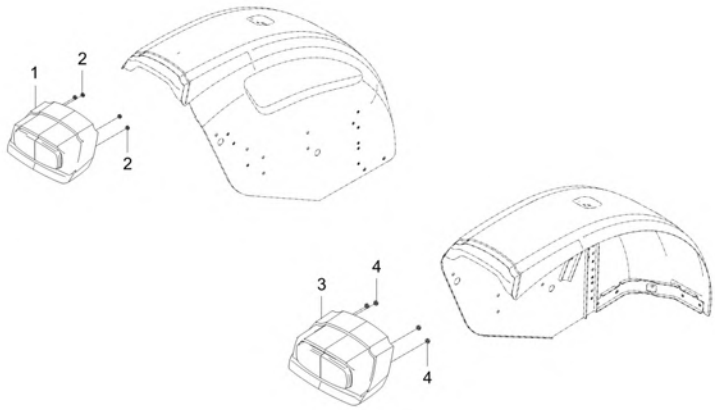

A : DK4510

No.	Part Number	Description	Qty A	Qty B	Qty C	Qty D	Qty E	I.C	Remark
1	TD25-0055A	ASSYREAR,COMBINATIONLAMP-LH	1						
2	02751-50060	NUT, FLANGE	4						M6XP1.0
3	TD25-0056A	ASSYREAR,COMBINATIONLAMP-RH	1						
4	02751-50060	NUT, FLANGE	4						M6XP1.0

----> Old replace New
<---- New replace Old
<-X-> Not interchangeable
<---> Interchangeable
<-O-> Interchangeable with another part(s)
* Please place an order assy(*)

https://tractormanualz.com/

TD2-G524003

REFLECTOR GROUP

(DK4510 : TR7600069 ~)

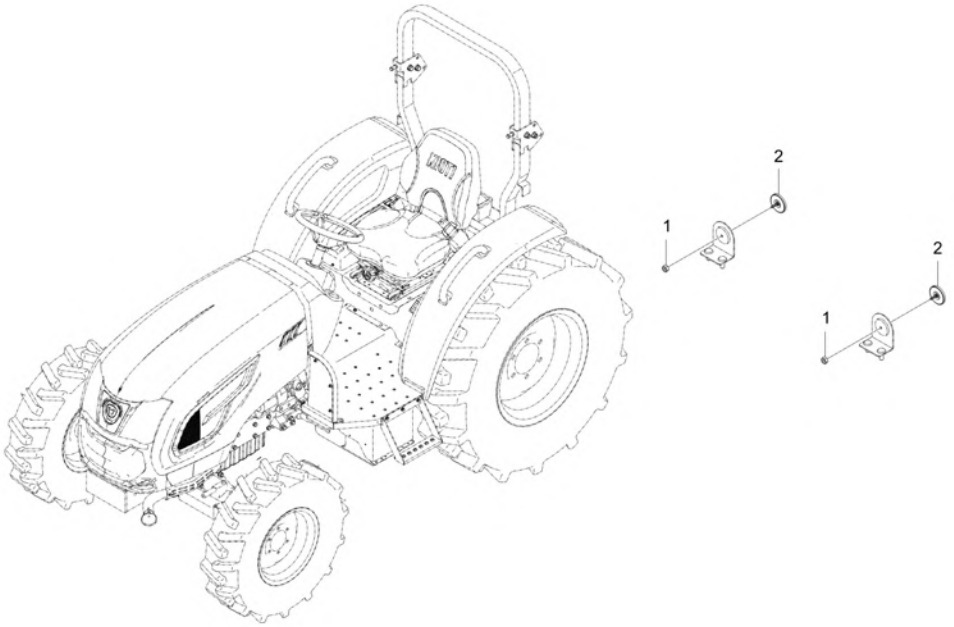

A : DK4510

No.	Part Number	Description	Qty A	Qty B	Qty C	Qty D	Qty E	I.C	Remark
1	T5638-85721	ASS'Y REFLECTOR dnr v	2						
2	02761-50050	NUT, FLANGE	2						M5XP0.8

----> Old replace New
<----> Interchangeable
* Please place an order assy(*)
<---- New replace Old
<-O-> Interchangeable with another part(s)
<-X-> Not interchangeable

https://tractormanualz.com/

TD2-G525004

LIGHT CONTROL GROUP

(DK4510 : TR7600069 ~)

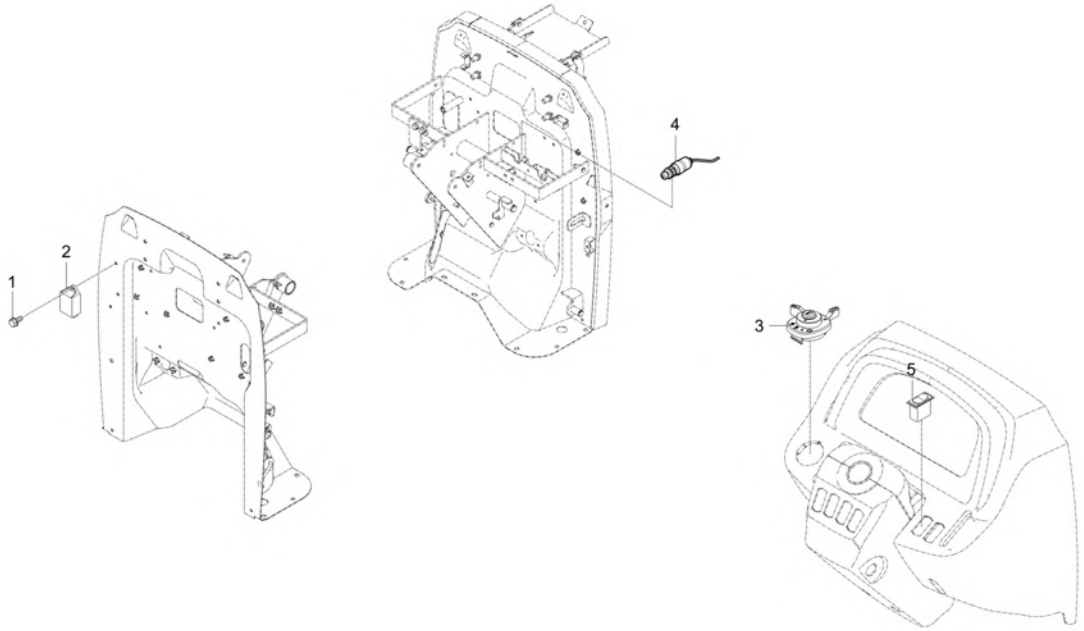

A : DK4510

No.	Part Number	Description	Qty A	Qty B	Qty C	Qty D	Qty E	I.C	Remark
1	01754-50610	BOLT, FLANGE	1						M6XP1.0
2	T2198-31052	FLASH UNIT	1 TR7600069 ~						
3	T2555-69023	ASS'Y COMBINATION SWITCH v	1						
4	T4520-41821	ASSY STOP SWITCH	1						
5	T5758-68351	SWITCH, EMERGENCY LAMP	1						
6	T4025-68301	COVER	1						

----> Old replace New
<----> Interchangeable
* Please place an order assy(*)
<---- New replace Old
<-O-> Interchangeable with another part(s)
<-X-> Not interchangeable

https://tractormanualz.com/

TD2-G525507

7 PIN SOCKET GROUP

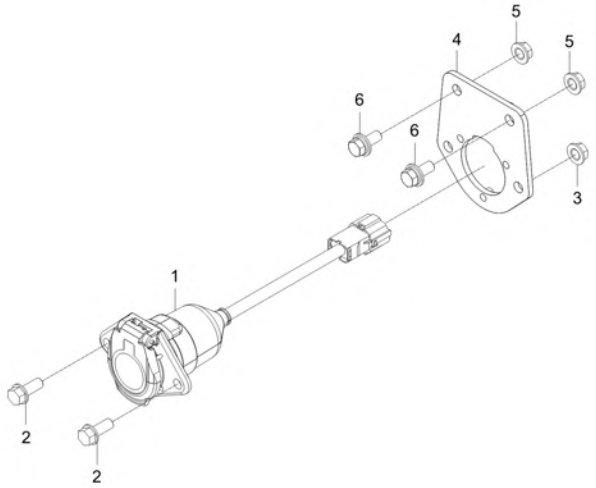

A : DK4510

No.	Part Number	Description	Qty A	Qty B	Qty C	Qty D	Qty E	I.C	Remark
1	T5535-69931	7 PIN SOCKET ASS'Y SAE v	1						
2	01754-50820	BOLT, FLANGE	2						M8XP1.25
3	02751-50080	FLANGE NUT 8MMX1.25P	2						M8XP1.25
4	TD26-0006A	BRACKET, 7 PIN SOCKET v	1						
5	02751-50080	FLANGE NUT 8MMX1.25P	2						M8XP1.25
6	01125-50820	BOLT, WASHER	2						M8XP1.25

----> Old replace New
<----> Interchangeable
* Please place an order assy(*)
<---- New replace Old
<-O-> Interchangeable with another part(s)
<-X-> Not interchangeable

https://tractormanualz.com/

TD2-G526002 FRONT WORKING LAMP GROUP(OPTION)

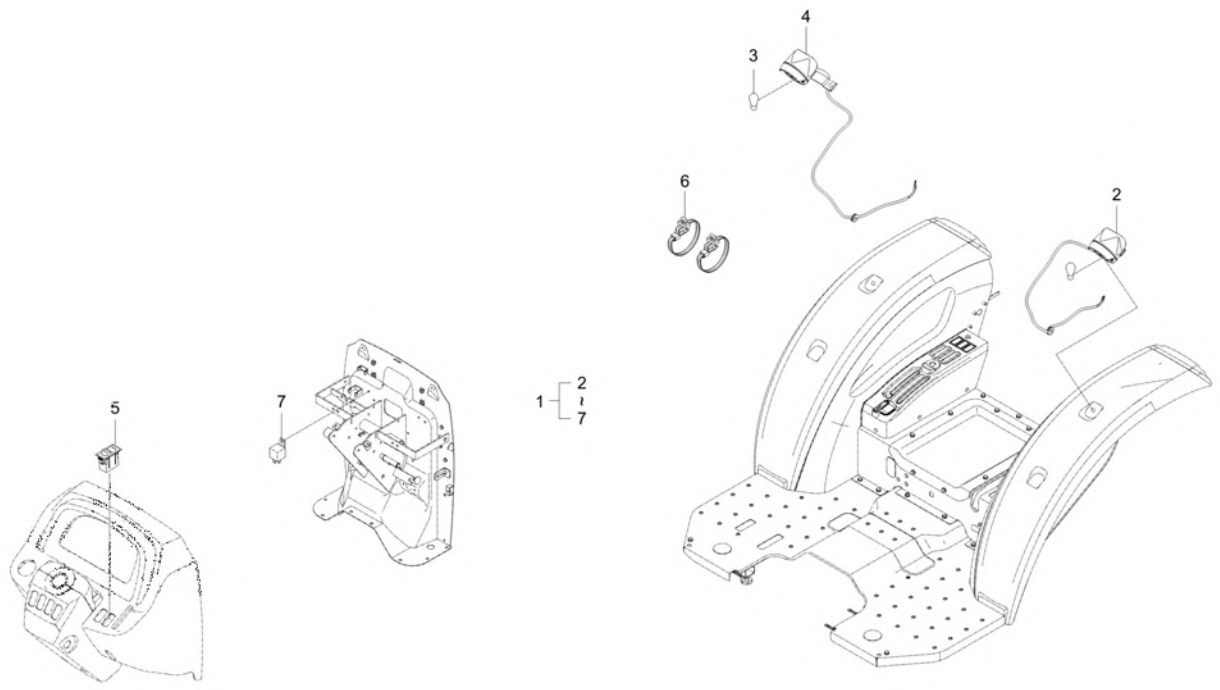

A : DK4510

No.	Part Number	Description	Qty A	Qty B	Qty C	Qty D	Qty E	I.C	Remark
1	T5755-A7012	WORK LAMP	1						
2	T5755-69851	ASS'Y WORKING LAMP LH	1						
3	T4620-69251	BULB, HALOGEN 12VX35W	1						H3
4	T5755-69861	ASS'Y WORKING LAMP RH	1						
5	T5535-54221	WORKING LAMP SWITCH, FR	1						
6	P5370-82551	BAND, CABLE	10						
7	T5710-69941	RELAY, 5P v	1						

----> Old replace New
<---- New replace Old
<-X-> Not interchangeable
<---> Interchangeable
<-O-> Interchangeable with another part(s)
* Please place an order assy(*)

https://tractormanualz.com/

TD2-G531024

WIRE HARNESS GROUP

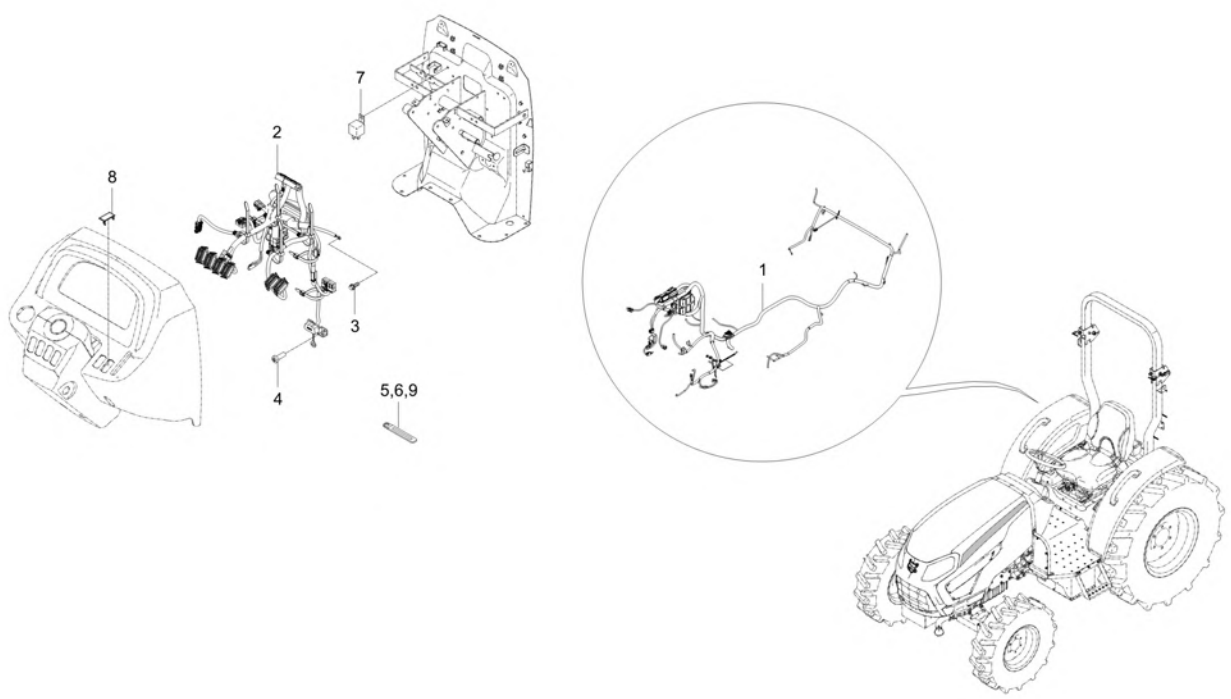

A : DK4510

No.	Part Number	Description	Qty A	Qty B	Qty C	Qty D	Qty E	I.C	Remark
1	TD25-0105C	ASSY WIRE HARNESS, MAIN	1						
1	TD25-0105D	ASSY WIRE HARNESS, MAIN	1					<------	
2	TD25-0106A	ASSY WIRE HARNESS, PANEL	1						
3	01754-50612	BOLT, FLANGE	2						M6*1.0
4	03054-50514	SCREW	2						
5	37155-3447-1	CLAMP,CORD	2						-
6	37155-3447-1	CLAMP,CORD	2						-
7	T5535-69961	RELAY,5P	1						Bracket
8	T4025-68301	COVER	1						
9	32240-3446-1	WIR'G CLAMP	1						

----> Old replace New
<---- New replace Old
<-X-> Not interchangeable
<---> Interchangeable
<-O-> Interchangeable with another part(s)
* Please place an order assy(*)

https://tractormanualz.com/

TD2-G531702

NEUTRAL WIRE HARNESS GROUP

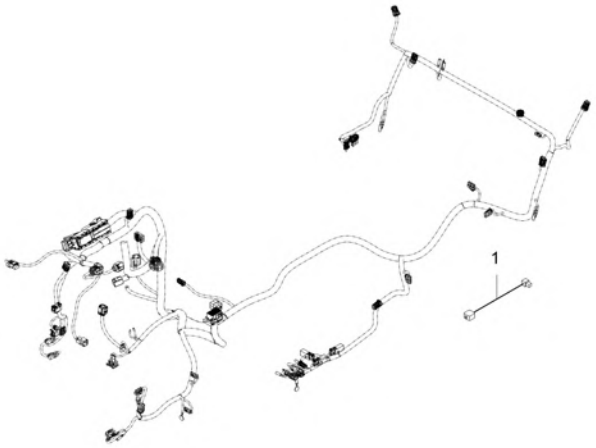

A : DK4510

No.	Part Number	Description	Qty A	Qty B	Qty C	Qty D	Qty E	I.C	Remark
1	T5758-69351	NEUTRAL SWITCH HARNESS	1						

----> Old replace New
<----> Interchangeable
* Please place an order assy(*)
<---- New replace Old
<-O-> Interchangeable with another part(s)
<-X-> Not interchangeable

https://tractormanualz.com/

TD2-G532502 HEAD LAMP WIRE HARNESS GROUP

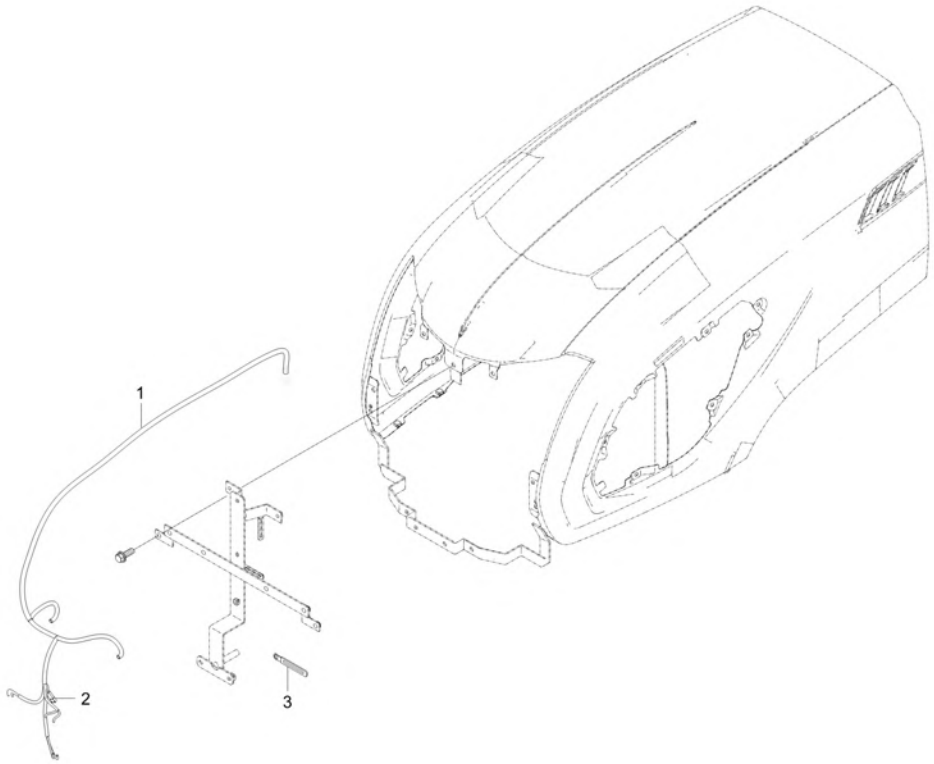

A : DK4510

No.	Part Number	Description	Qty A	Qty B	Qty C	Qty D	Qty E	I.C	Remark
1	T5755-69391	ASS'Y WIRE HARNESS HEAD LAMP	1						
2	T4620-69331	DIODE 2P	1						800V,3.0A
3	37150-3447-1	WIR'G CLAMP	3						T0.5

----> Old replace New <---- New replace Old <-X-> Not interchangeable
<---> Interchangeable <-O-> Interchangeable with another part(s)
* Please place an order assy(*)

https://tractormanualz.com/

TD2-G533001

DISPLAY CONTROL GROUP

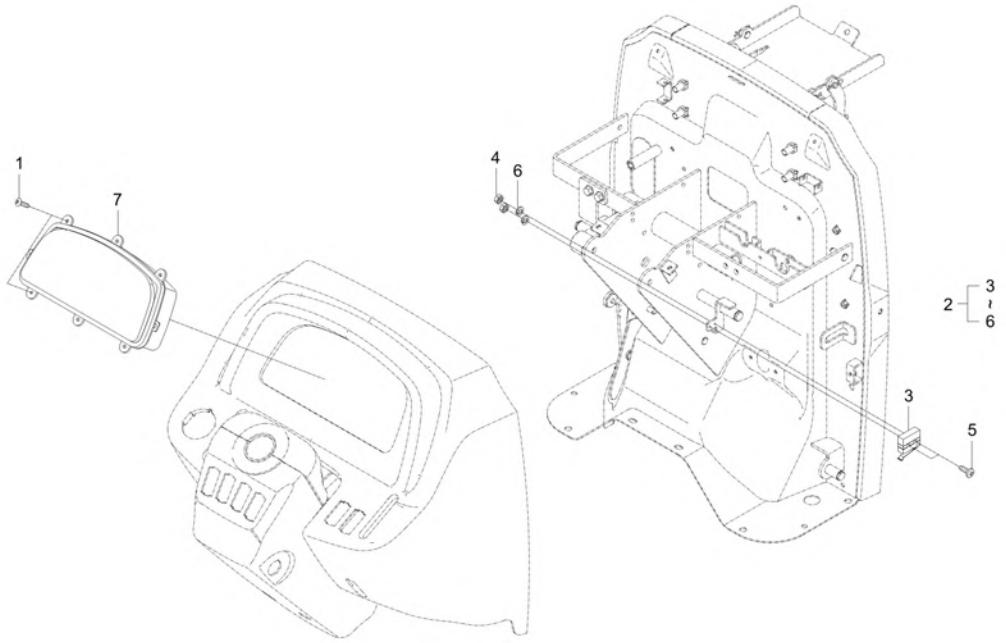

A : DK4510

No.	Part Number	Description	Qty A	Qty B	Qty C	Qty D	Qty E	I.C	Remark
1	38240-1883-1	TAPPING SCREW dnr v	6						M4X16
2	T2198-68811	MICRO SWITCH	1						DC30V 3A
3	T5535-69281	MICRO SWITCH	1						
4	02054-50020	NUT	2						M2*P0.4
5	03054-50214	BOLT	2						M2*P0.4*L14
6	04512-50020	WASHER, SPRING obs v	2						M2
7	T5730-69012	ASSY PLATE, METER dnr v	1 ~ SR7600128						
7	T5730-69013	ASSY PLATE, METER v dnr	1 SR7600129 ~ UR7600100					<------	
7	T5730-69014	ASSY PLATE,METER	1 UR7600101 ~ UR7600142					<------	
7	T5730-69015	ASSY PLATE,METER	1 UR7600143 ~ VR7600008					<------	
7	T5730-69016	ASSY PLATE,METER	1 VR7600009 ~ WR7600104					<------	

----> Old replace New
<---- New replace Old
<-X-> Not interchangeable
<---> Interchangeable
<-O-> Interchangeable with another part(s)
* Please place an order assy(*)

https://tractormanualz.com/

TD2-G533501

FUEL SENDER GROUP

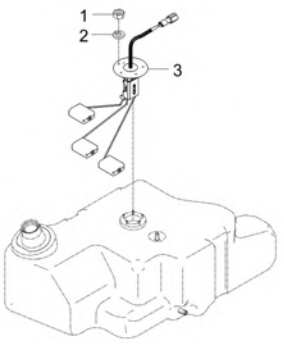

A : DK4510

No.	Part Number	Description	Qty A	Qty B	Qty C	Qty D	Qty E	I.C	Remark
1	02054-50040	NUT	5						M4*P0.7
2	04512-50040	WASHER, SPRING	5						M4
3	T5710-69211	UNIT, FUEL dnr v	1						
3	T5710-69212	UNIT, FUEL dnr v	1 TR7600091 ~ UR7600122					<------	
3	TD25-0092A	UNIT,FUEL dnr v	1 UR7600123 ~ UR7600198					<----->	
3	TD25-0092B	ASSY SENDER, FUEL v	1 UR7600199 ~ WR7600192					<------	

----> Old replace New
<----> Interchangeable
* Please place an order assy(*)
<---- New replace Old
<-O-> Interchangeable with another part(s)
<-X-> Not interchangeable

https://tractormanualz.com/

TD2-G534002

PTO CONTROL GROUP

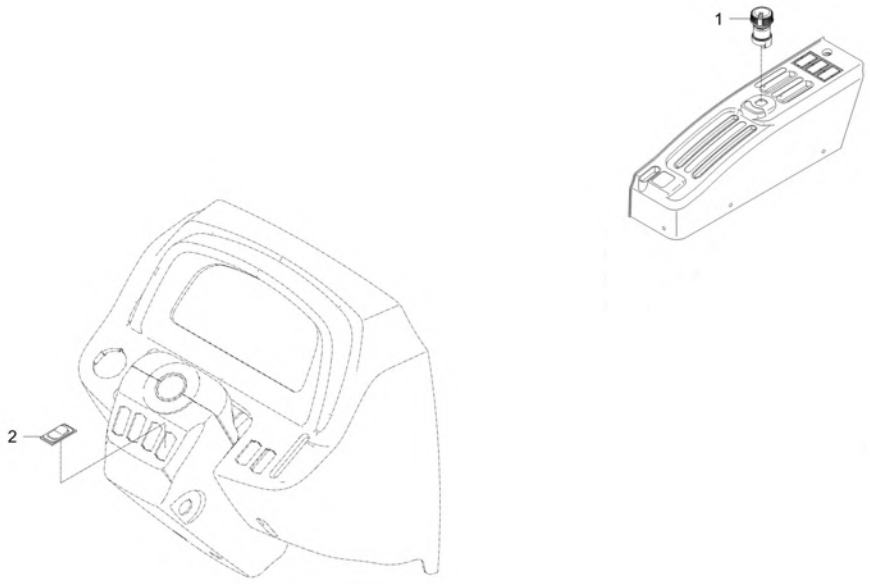

A : DK4510

No.	Part Number	Description	Qty A	Qty B	Qty C	Qty D	Qty E	I.C	Remark
1	T5710-69252	PTO SWITCH v	1						
2	T4025-68301	COVER	1						

----> Old replace New
<---> Interchangeable
* Please place an order assy(*)
<---- New replace Old
<-O-> Interchangeable with another part(s)
<-X-> Not interchangeable

https://tractormanualz.com/

TD2-G534502

HORN GROUP

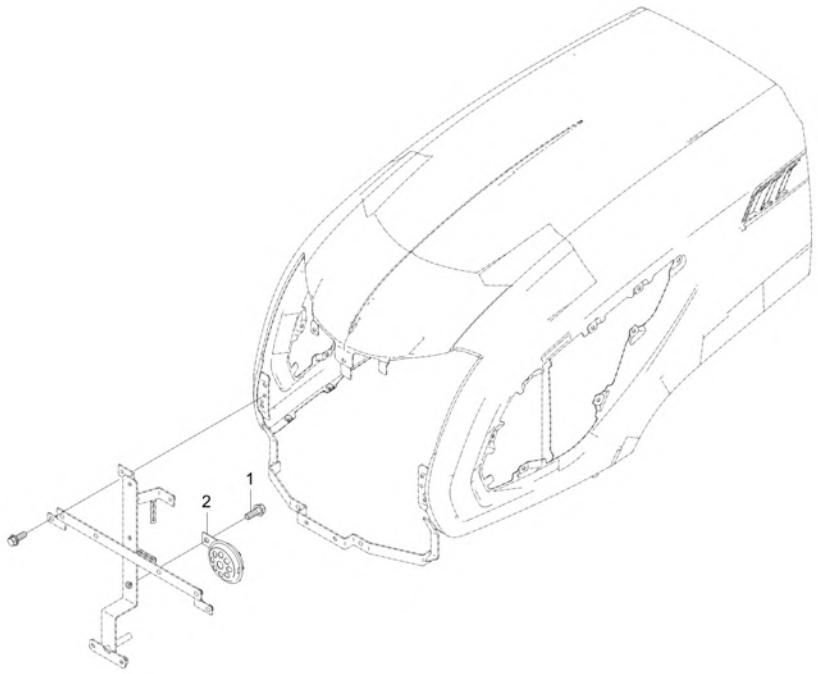

A : DK4510

No.	Part Number	Description	Qty A	Qty B	Qty C	Qty D	Qty E	I.C	Remark
1	01123-50820	BOLT, WASHER v	1 PR7600001 ~ UR7600100						M8XP1.25
1	01023-50616	BOLT, WASHER	1 UR7600101 ~ WR7600192					<------	M6*P1.0
2	T2555-75951	ASSY HORN dnr v	1 ~ UR7600100						
2	T4144-75952	ASSY HORN	1 UR7600101 ~ WR7600192					<------	70파이, 420Hz, 110

----> Old replace New
<---> Interchangeable
* Please place an order assy(*)
<---- New replace Old
<-O-> Interchangeable with another part(s)
<-X-> Not interchangeable

https://tractormanualz.com/

TD2-G535001

TIER4 CONTROL GROUP

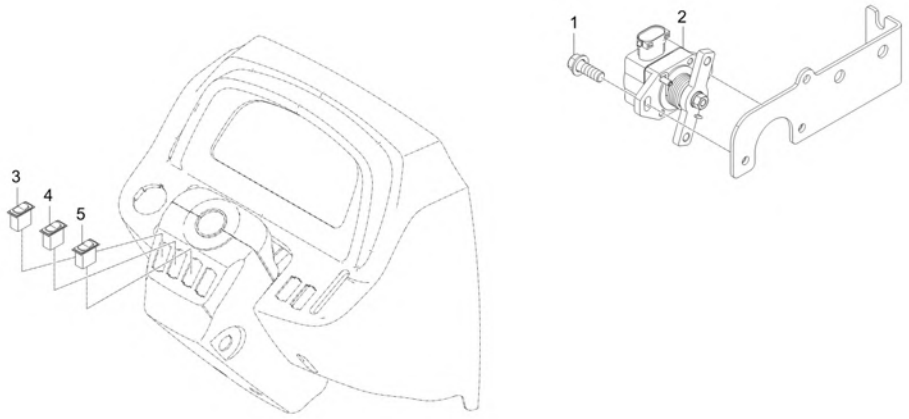

A : DK4510

No.	Part Number	Description	Qty A	Qty B	Qty C	Qty D	Qty E	I.C	Remark
1	01023-50616	BOLT, WASHER	2						M6*P1.0
2	F6800-60011	THROTTLE POSITION SENSOR	1						
2	TD25-0140A	ASSY SENSOR, THROTTLE POSITION	1					<----->	
3	T5758-69251	DPF SWITCH	1						
4	T5758-69471	PTO SWITCH	1						
5	T5758-69491	CRUISE ADJUST SWITCH	1						

----> Old replace New
<----> Interchangeable
* Please place an order assy(*)
<---- New replace Old
<-O-> Interchangeable with another part(s)
<-X-> Not interchangeable

https://tractormanualz.com/

TD2-G522501 REAR COMBINATION LAMP GROUP

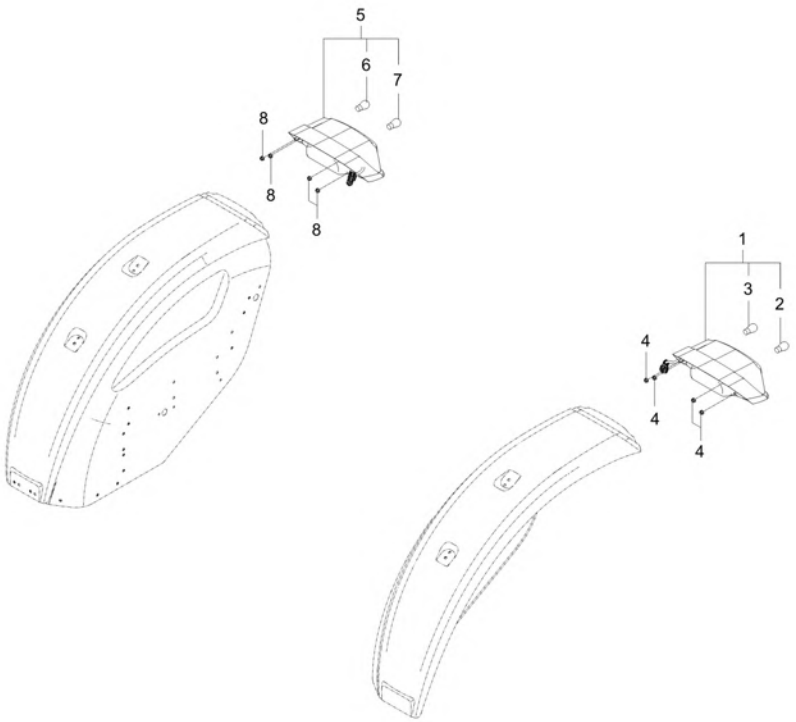

A : DK4510

No.	Part Number	Description	Qty A	Qty B	Qty C	Qty D	Qty E	I.C	Remark
1	T5710-69712	ASSY TAIL LAMP(LEFT)	1						
1	T5710-69713	ASSY TAIL LAMP(LEFT)	1 TR7600069 ~ TR7600070					<------	
1	T5710-69714	ASSY TAIL LAMP(LEFT)	1					<------	
2	T5210-69731	AMBER BULB	1						12VP21W
3	T5210-69741	BULB	1						
4	02751-50060	NUT, FLANGE	4						M6XP1.0
5	T5710-69722	ASSY TAIL LAMP(RIGHT)	1						
5	T5710-69723	ASSY TAIL LAMP(RIGHT)	1 TR7600069 ~ TR7600070					<------	
5	T5710-69724	ASSY TAIL LAMP RIGHT v	1					<------	
6	T5210-69731	AMBER BULB	1						12VP21W
7	T5210-69741	BULB	1						
8	02751-50060	NUT, FLANGE	4						M6XP1.0

----> Old replace New
<---- New replace Old
<-X-> Not interchangeable
<---> Interchangeable
<-O-> Interchangeable with another part(s)
* Please place an order assy(*)

https://tractormanualz.com/

TD200C-G860A

ELECTRICAL SYSTEM GROUP

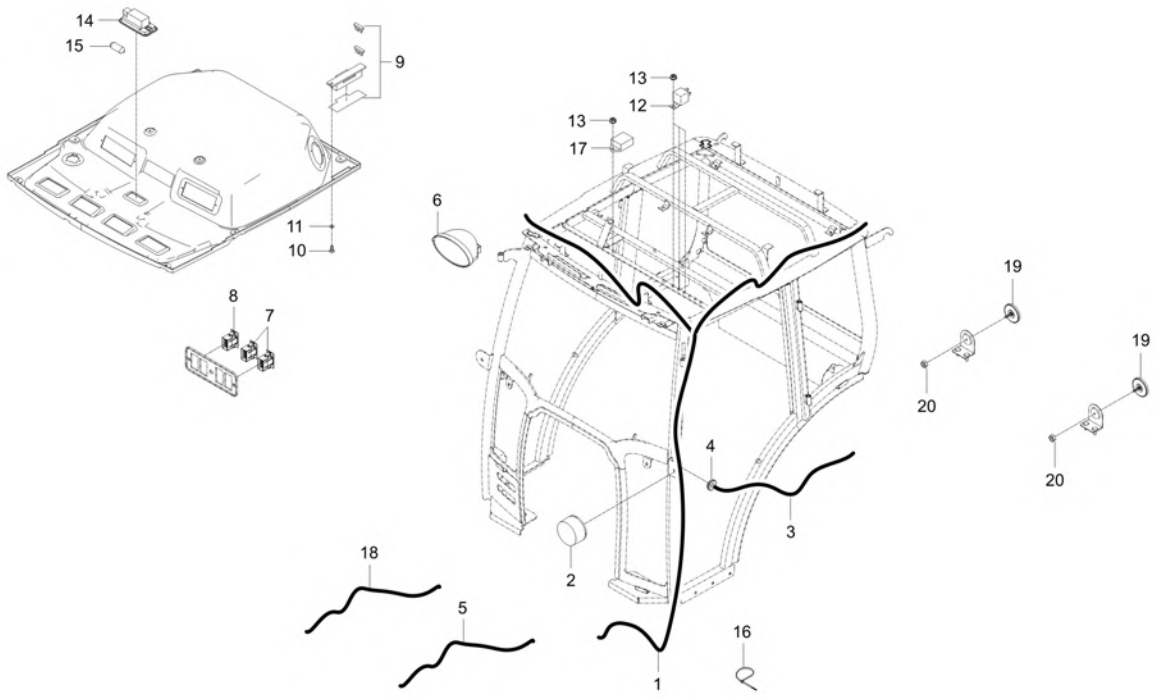

A : DK4510

No.	Part Number	Description	Qty A	Qty B	Qty C	Qty D	Qty E	I.C	Remark
1	T5755-69171	ASSY, CABIN WIRE HARNESS	1						
1	T5755-69172	ASSY, CABIN WIRE HARNESS dnr v	1					<------	
1	T5755-69173	ASSY, CABIN WIRE HARNESS v	1					<------	
2	T2391-69071	LAMP FRONT COMBINATION v	2						
2	TD25-0052A	ASSY LAMP, TURN SIGNAL	2					<--X-->	
3	T5755-69361	WIRE, CONNECTION	2						
4	31355-2949-1	GROMMET	2						
5	T2131-69351	HARNESS WIRE GENERATOR CONNECTION	1						
6	T5525-69803	ASSY LAMJP,WORKING	2						
7	T4520-54222	SWITCH WORKING LAMP	2						
8	T4681-83611	SWITCH HEATER	1						
9	T2131-69601	ASSY FUSE BOX	1						
10	03054-50420	OB SCREW	2						
11	04013-50040	WASHER PLAIN	2						M4
12	T5535-69951	RELAY 4P v	3 RR7600001 ~ WR7600104						Bracket
12	T5535-69961	RELAY,5P	6 PR7600043 ~ WR7600104					<------	Bracket
13	02761-50060	NUT, FLANGE	3						M6XP1.0
13	02751-50060	NUT, FLANGE	7					<------	M6XP1.0

----> Old replace New
<---- New replace Old
<-X-> Not interchangeable
<---> Interchangeable
<-O-> Interchangeable with another part(s)
* Please place an order assy(*)

https://tractormanualz.com/

TD200C-G860A

ELECTRICAL SYSTEM GROUP

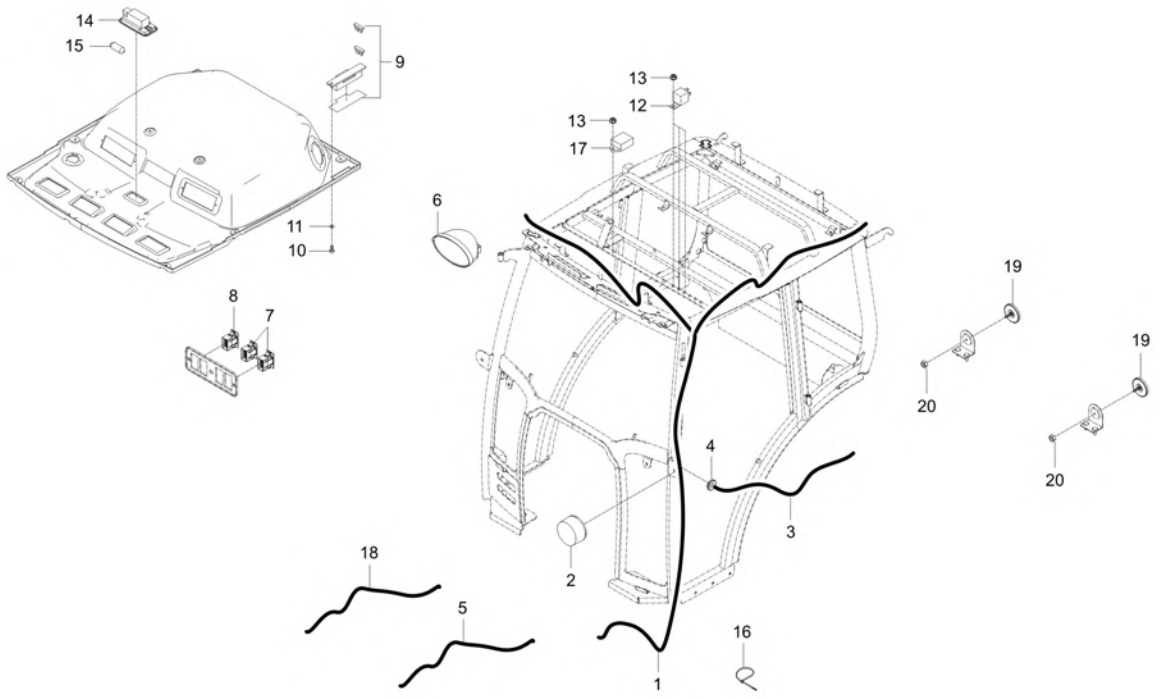

A : DK4510

No.	Part Number	Description	Qty A	Qty B	Qty C	Qty D	Qty E	I.C	Remark
14	T4815-82361	LAMP ROOM	1						
15	T4815-46791	BULB (DK45S / DK55 / DK65S-ROOM LAMP ASS'Y)	1						
16	T2185-82551	CABLE TIE, BLACK / 300	30						L290
17	T4836-69251	TIMER	1						
17	T4836-69252	TIMER, HEAT WIRE	1					<------	
18	TD25-0015A	ASSY WIRE HARNESS, CONNECTING GLASS HEAT	2						
19	T5638-85721	ASS'Y REFLECTOR dnr v	2						
20	02054-50040	NUT	2						M4*P0.7

----> Old replace New
<---- New replace Old
<-X-> Not interchangeable
<---> Interchangeable
<-O-> Interchangeable with another part(s)
* Please place an order assy(*)

https://tractormanualz.com/

TD2-G6D3002

LABEL(MAIN/ETC) GROUP

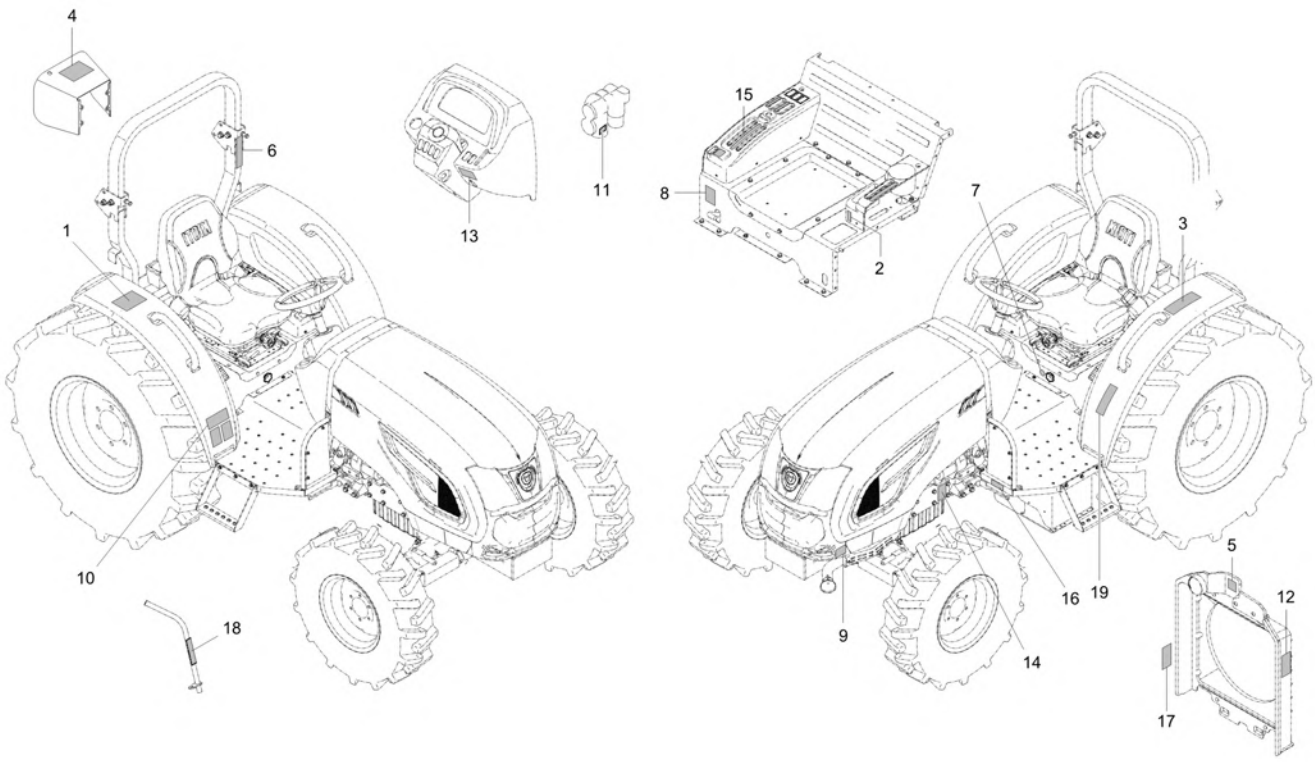

A : DK4510

No.	Part Number	Description	Qty A	Qty B	Qty C	Qty D	Qty E	I.C	Remark
1	F6800-29112	LABEL CAUTION v	1						
2	T2241-50311	NAME,PLATE	1						
3	T2555-52141	LABEL,CAUTION	1						
4	T2555-52262	LABEL, CAUTION	1						
5	T2555-52282	LABEL RADIATOR v	1						
6	T2555-52353	ROPS LABEL	1						
7	T2610-52461	LABEL, SPEED CONTROL	1						
8	T2611-26693	LABEL, DIFFERENTIAL FIXING	1						
9	T2615-55112	LABEL, MUFFLER CAUTION	1						T0.05-0.08
10	T4182-53191	LABEL, WARNING	1						
11	T4625-52281	LABEL HYD BLOCK	1						
12	T4625-52351	LABEL, FAN CAUTION	1						
13	T4938-52351	LABEL, BRAKE REMINDER	1						
14	T4938-53551	LABEL	1						
15	T5710-55461	LABEL, POSITION&RAFTLEVER	1						
16	T2555-52611	LABEL, FUEL	1 ~ RR7600068						
16	TC26-0388A	LABEL, WARNING FUELING	1 RR7600069 ~ UR7600016					<------	
17	TG16-1530A	DAEDONGOILLABEL(EN)	1						80 x 35

----> Old replace New
<---> Interchangeable
* Please place an order assy(*)
<---- New replace Old
<-O-> Interchangeable with another part(s)
<-X-> Not interchangeable

https://tractormanualz.com/

TD2-G6D3002

LABEL(MAIN/ETC) GROUP

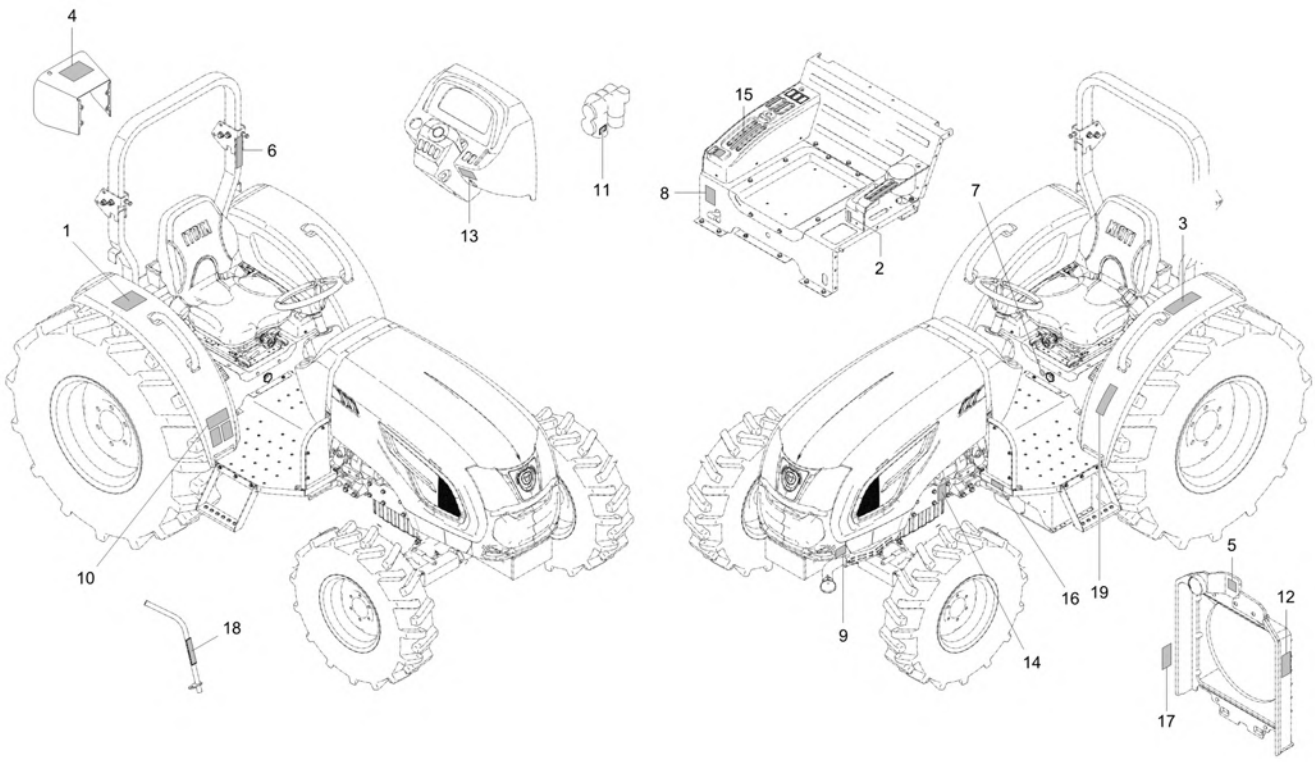

A : DK4510

No.	Part Number	Description	Qty A	Qty B	Qty C	Qty D	Qty E	I.C	Remark
17	TG16-1530B	DAEDONG OIL LABEL	1					<------	80 x 35
18	TG16-1540A	DAEDONGOILLABEL(EN)	1						135 x 35
19	TD26-1009A	LABEL, WARNING	1 UR7600143 ~ VR7600306						-
19	TD26-1009B	LABEL, WARNING	1 VR7600307 ~ WR7600104					<------	-

----> Old replace New
<---- New replace Old
<-X-> Not interchangeable
<---> Interchangeable
<-O-> Interchangeable with another part(s)
* Please place an order assy(*)

https://tractormanualz.com/

TD2-G511001

ENGINE ELECTRICAL GROUP(1)

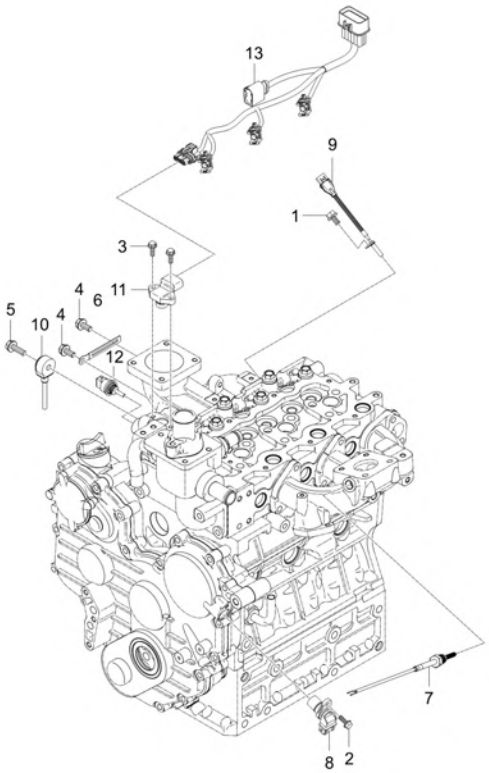

A : DK4510

No.	Part Number	Description	Qty A	Qty B	Qty C	Qty D	Qty E	I.C	Remark
1	01754-50616	BOLT, FLANGE v	1						M6*P1.0
1	01754-50610	BOLT, FLANGE	1 ~ VR7600176					<------	M6XP1.0
2	01754-50616	BOLT, FLANGE v	1						M6*P1.0
3	01754-50616	BOLT, FLANGE v	2						M6*P1.0
4	01754-50812	BOLT, FLANGE	2						M8XP1.25
5	01754-50830	BOLT FLANGE	1						M8*P1.25
6	37150-3447-1	WIR'G CLAMP	2						T0.5
6	37150-3447-1	WIR'G CLAMP	1					<------	T0.5
7	F5800-26501	EXHAUST GAS TEMPERATURE SENSOR	1						
8	F6800-26201	SENSOR, CAMSHAFT WHEEL v	1						
9	F6800-26302	SENSOR, CRANKSHAFT WHEEL v	1						
9	F6800-26303	SENSOR, CRANKSHAFT WHEEL dnr v	1					<--X-->	
9	EH29-0002A	ASSY SENSOR, CRANKSHAFT WHEEL v	1					<------	
10	F6800-26401	SENSOR, KNOCK	1						
11	F6800-26701	SENSOR, INTAKE AIR PRESSURE	1						
12	F6800-26751	SENSOR, INTAKE AIR TEMPERATURE	1						
13	T5525-69313	INJECTOR CONNECTION WIRE HARNESS ASSAY	1						

----> Old replace New
<---- New replace Old
<-X-> Not interchangeable
<---> Interchangeable
<-O-> Interchangeable with another part(s)
* Please place an order assy(*)

https://tractormanualz.com/

TD2-G511501

ENGINE ELECTRICAL GROUP(2)

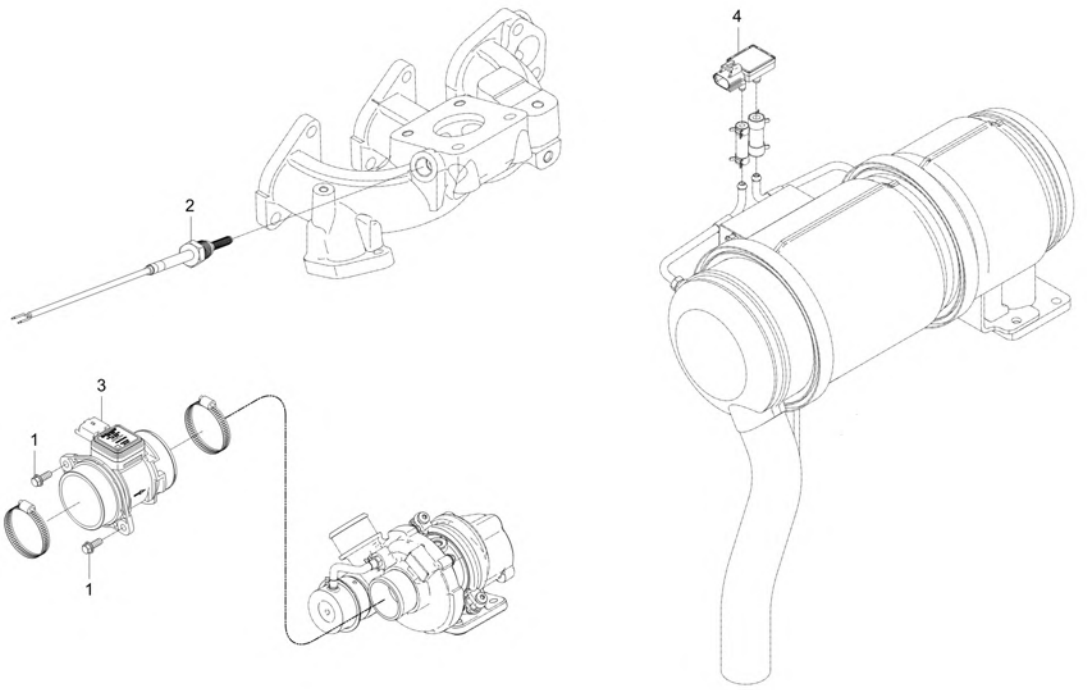

A : DK4510

No.	Part Number	Description	Qty A	Qty B	Qty C	Qty D	Qty E	I.C	Remark
1	01754-50610	BOLT, FLANGE	2						M6XP1.0
2	F5800-26501	EXHAUST GAS TEMPERATURE SENSOR	1						
3	F5800-26801	SENSOR, AIR MASS FLOW	1						N
4	F6800-26651	SENSOR, DPF DIFFERENTIAL PRESSURE	1						

----> Old replace New
<---- New replace Old
<-X-> Not interchangeable
<---> Interchangeable
<-O-> Interchangeable with another part(s)
* Please place an order assy(*)

https://tractormanualz.com/

TD2-G513001

STARTER MOTOR GROUP

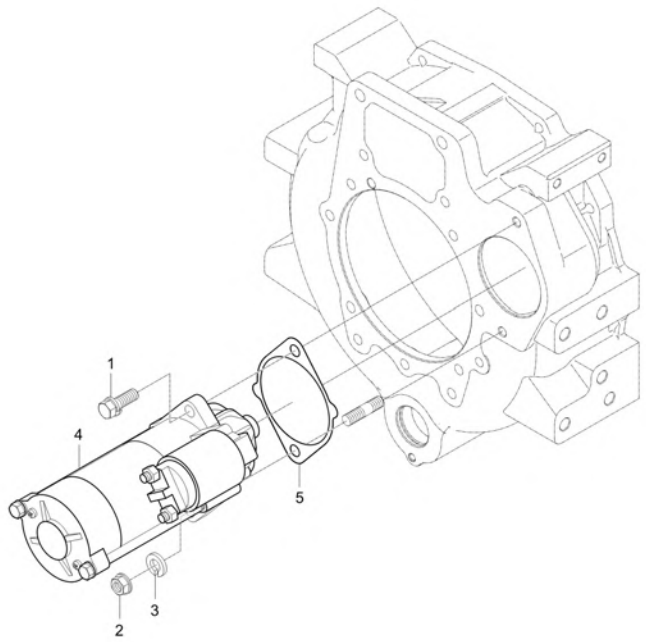

A : DK4510

No.	Part Number	Description	Qty A	Qty B	Qty C	Qty D	Qty E	I.C	Remark
1	01133-51030	WITH WASHER BOLT	1						M10XP1.25
2	02176-50100	NUT v	1						M10XP1.25
3	04512-50100	SPRING WASHER	1						M10
4	E5500-63016	ASSY, STARTER MOTOR sp v	1						
5	E6200-04623	GASKET v	1						T0.5

----> Old replace New
<---> Interchangeable
* Please place an order assy(*)
<---- New replace Old
<-O-> Interchangeable with another part(s)
<-X-> Not interchangeable

https://tractormanualz.com/

TD2-G521001

HEAD LIGHT GROUP

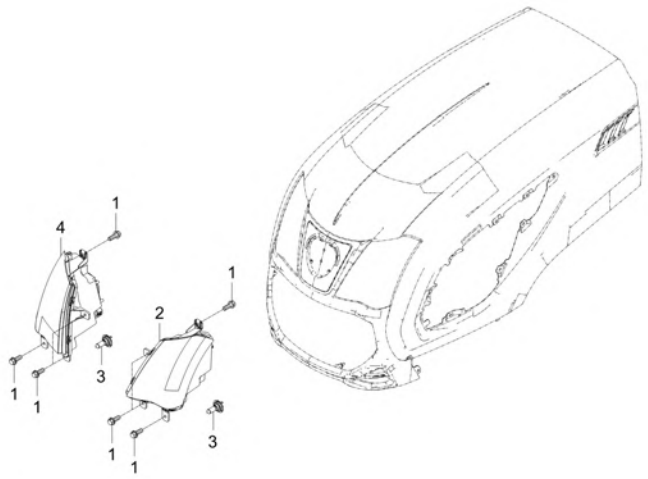

A : DK4510

No.	Part Number	Description	Qty A	Qty B	Qty C	Qty D	Qty E	I.C	Remark
1	01754-50616	BOLT, FLANGE v	8						M6*P1.0
2	T5710-69512	ASSY LAMP,HEAD LH	1 ~ TR7600070						
2	T5710-69513	HEAD LAMP ASSY LH	1 TR7600071 ~ WR7600104					<------	
3	T2555-69571	BULB	1						H7 12V 55W
4	T5710-69522	ASSY LAMP,HEAD RH	1 ~ TR7600070						
4	T5710-69523	HEAD LAMP ASSY RH	1 TR7600071 ~ WR7600104					<------	

----> Old replace New
<---> Interchangeable
* Please place an order assy(*)
<---- New replace Old
<-O-> Interchangeable with another part(s)
<-X-> Not interchangeable

https://tractormanualz.com/

TD2-G531003 DOUBLE ACTING VALVE LEVER GROUP

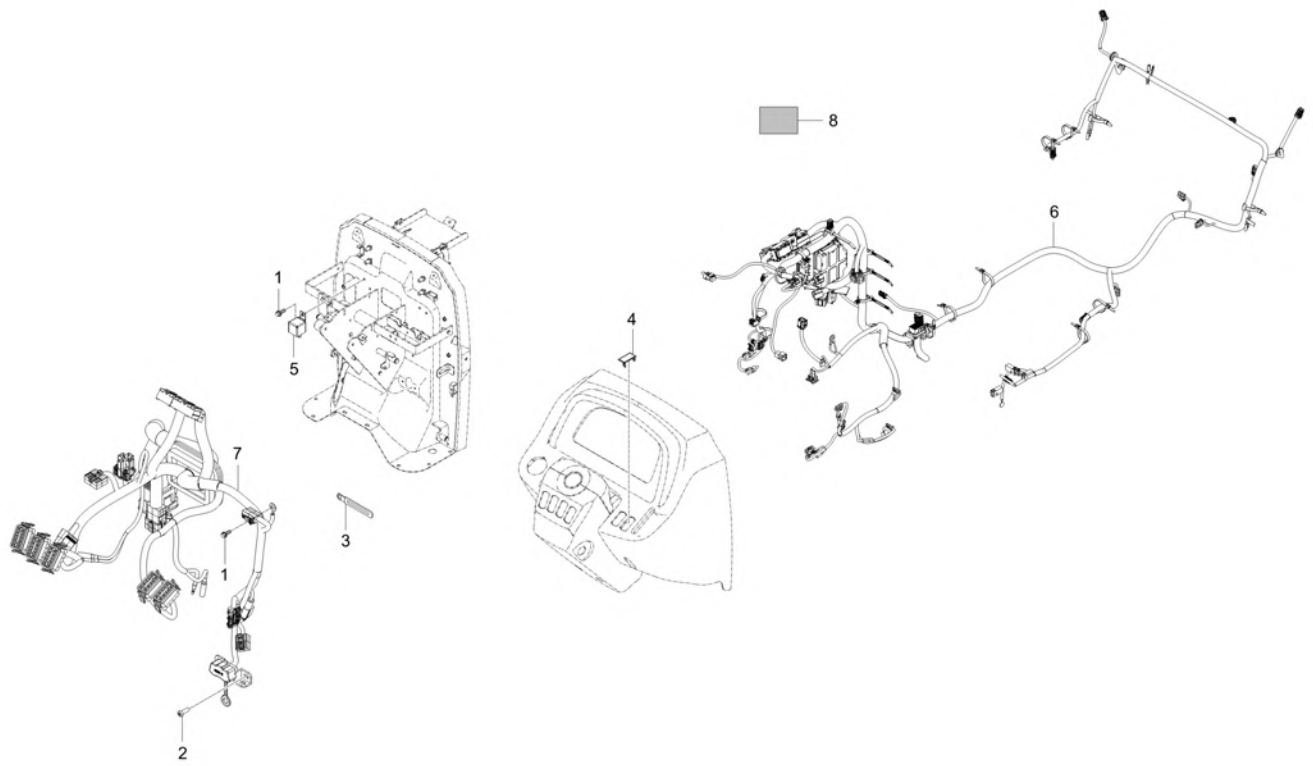

A : DK4510

No.	Part Number	Description	Qty A	Qty B	Qty C	Qty D	Qty E	I.C	Remark
1	01754-50612	BOLT, FLANGE	2						M6*1.0
2	03054-50514	SCREW	2						
3	37155-3447-1	CLAMP,CORD	7						-
4	T4025-68301	COVER	1						
5	T5535-69961	RELAY,5P	1						Bracket
6	T5755-69383	WIRE HARNESS, MAIN D v	1 PR7600001 ~ RR7600054						
6	T5755-69384	WIRE HARNESS, MAIN D v	1 RR7600055 ~ RR7600068					<--X-->	
6	T5755-69385	WIRE HARNESS, MAIN D v	1 RR7600069 ~ SR7600102					<------	
6	T5755-69386	WIRE HARNESS,MAIN D	1 SR7600103 ~ TR7600068					<--X-->	
6	T5755-69387	WIRE HARNESS, MAIN D	1 TR7600069 ~ TR7600090					<--X-->	
6	T5755-69388	WIRE HARNESS, MAIN D v	1 TR7600091 ~ UR7600000					<--X-->	
6	T5755-69389	WIRE HARNESS,MAIN D v	1 UR7600001 ~ VR7600176					<--O-->	
6	T5755-6938A	WIRE HARNESS, MAIN D v	1					<--X-->	
7	T5755-69423	ASSY HARNESS	1 PR7600001 ~ TR7600068						
7	T5755-69424	WIRE HARNESS, PANEL	1 TR7600069 ~ TR7600198					<--X-->	
7	T5755-69425	ASSY HARNESS	1 UR7600001 ~ VR7600176					------>	
7	T5755-69426	ASSY HARNESS	1					<----->	
8	T5755-68502	LABEL,FUSE BOX	1						

----> Old replace New
<---- New replace Old
<-X-> Not interchangeable
<---> Interchangeable
<-O-> Interchangeable with another part(s)
* Please place an order assy(*)

https://tractormanualz.com/

TD2-G531501

POWER SOCKET GROUP

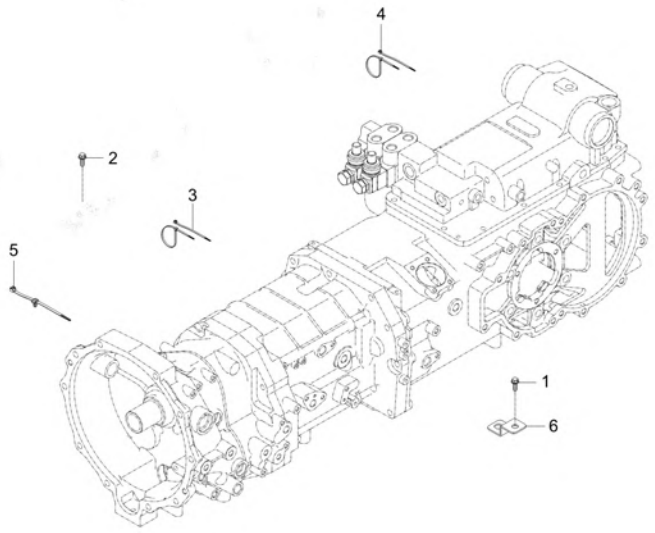

A : DK4510

No.	Part Number	Description	Qty A	Qty B	Qty C	Qty D	Qty E	I.C	Remark
1	01754-50616	BOLT, FLANGE v	5						M6*P1.0
2	01754-50812	BOLT, FLANGE	1						M8XP1.25
3	T2185-82551	CABLE TIE, BLACK / 300	10						L290
4	T2185-82561	BAND, CORD v	10						L200
5	T2198-82571	BAND CABLE	2						
6	T5250-68771	BRACKET	3						

----> Old replace New
<----> Interchangeable
* Please place an order assy(*)
<---- New replace Old
<-O-> Interchangeable with another part(s)
<-X-> Not interchangeable

https://tractormanualz.com/

TD2-G532501

HEAD LAMP WIRE HARNESS GROUP

(DK4510 : TR7600069 ~)

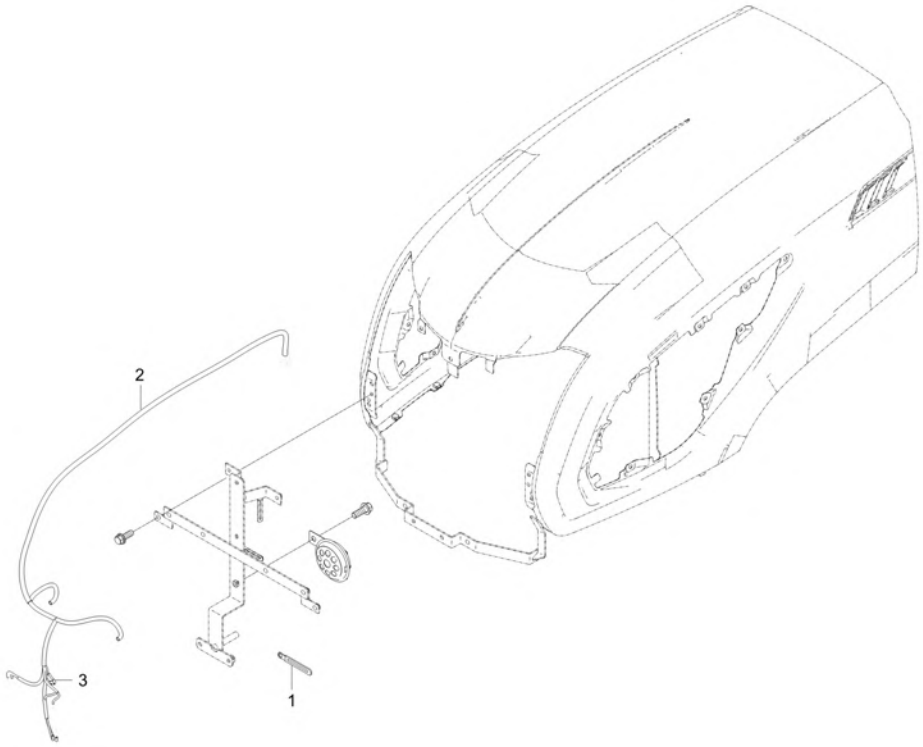

A : DK4510

No.	Part Number	Description	Qty A	Qty B	Qty C	Qty D	Qty E	I.C	Remark
1	37150-3447-1	WIR'G CLAMP	3						T0.5
2	T5710-69391	ASS'Y WIRE HARNESS HEAD LAMP	1						
3	T4620-69331	DIODE 2P	1						800V,3.0A

----> Old replace New
<---> Interchangeable
* Please place an order assy(*)
<---- New replace Old
<-O-> Interchangeable with another part(s)
<-X-> Not interchangeable

https://tractormanualz.com/

TD2-G6A2002

FRONT WEIGHT GROUP(OPTION)

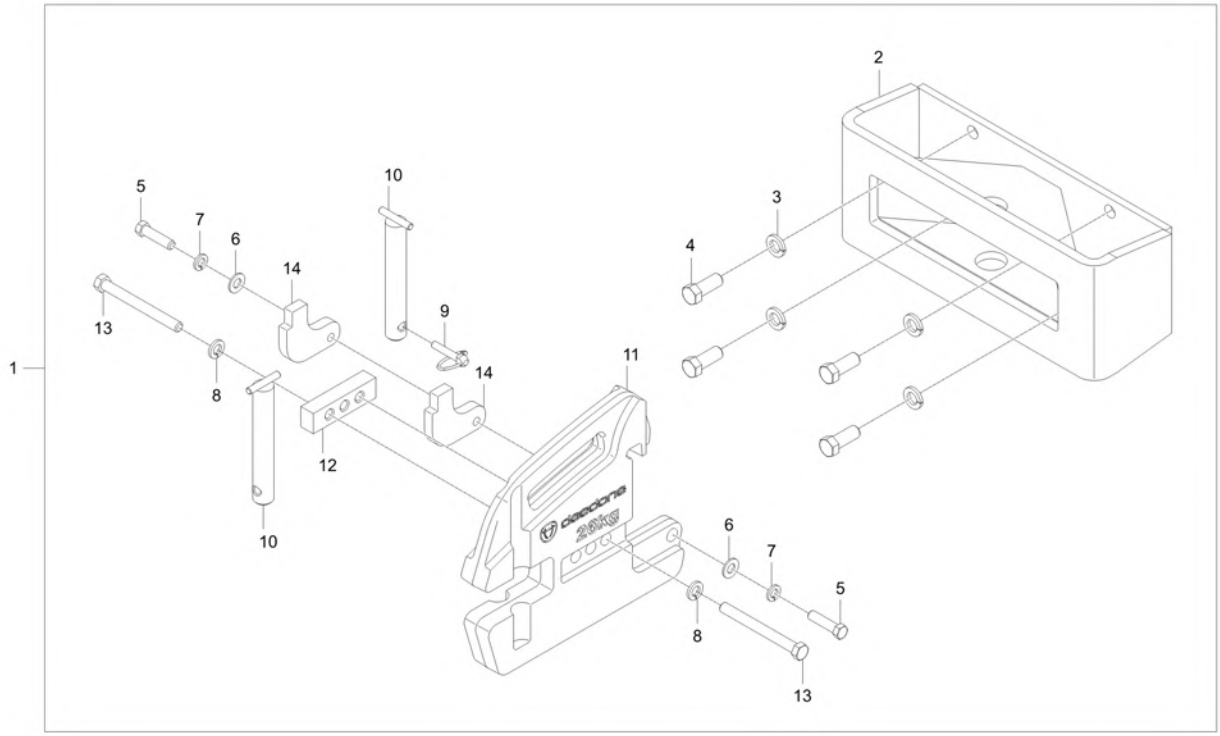

A : DK4510

No.	Part Number	Description	Qty A	Qty B	Qty C	Qty D	Qty E	I.C	Remark
1	T5710-A5031	WEIGHT KIT	1						
1	T5710-A5032	WEIGHT KIT	1					<------	
2	T5525-89411	BRACKET, FRONT-WEIGHT dnr v	1						
3	04512-50140	SPRING WASHER	4						
4	01173-51435	BOLT v	4						M14XP1.5
5	01173-51455	BOLT	2						M14P1.5*55
6	04013-50140	PLAIN WAHSER	2						M14
7	04512-50140	SPRING WASHER	2						
8	04512-50160	WASHER, SPRING	2						M16
9	34150-3764-4	PIN,CLIP	1						DIA10.0
10	T5525-89421	PIN	2						
11	T5525-89451	WEIGHT, FR RR dnr v	6						
11	T5525-89452		1					<------	
12	T5525-89461	MOUNTING PLATE v	1						T25.0
13	T5525-89471	BOLT, FRONT WIGHT	2						M16XP1.5XL 150
14	T5525-89481	BRACKET	2						T16

----> Old replace New
<---- New replace Old
<-X-> Not interchangeable
<---> Interchangeable
<-O-> Interchangeable with another part(s)
* Please place an order assy(*)

https://tractormanualz.com/

TD2-G6D1014

LABEL(BONNET COVER) GROUP

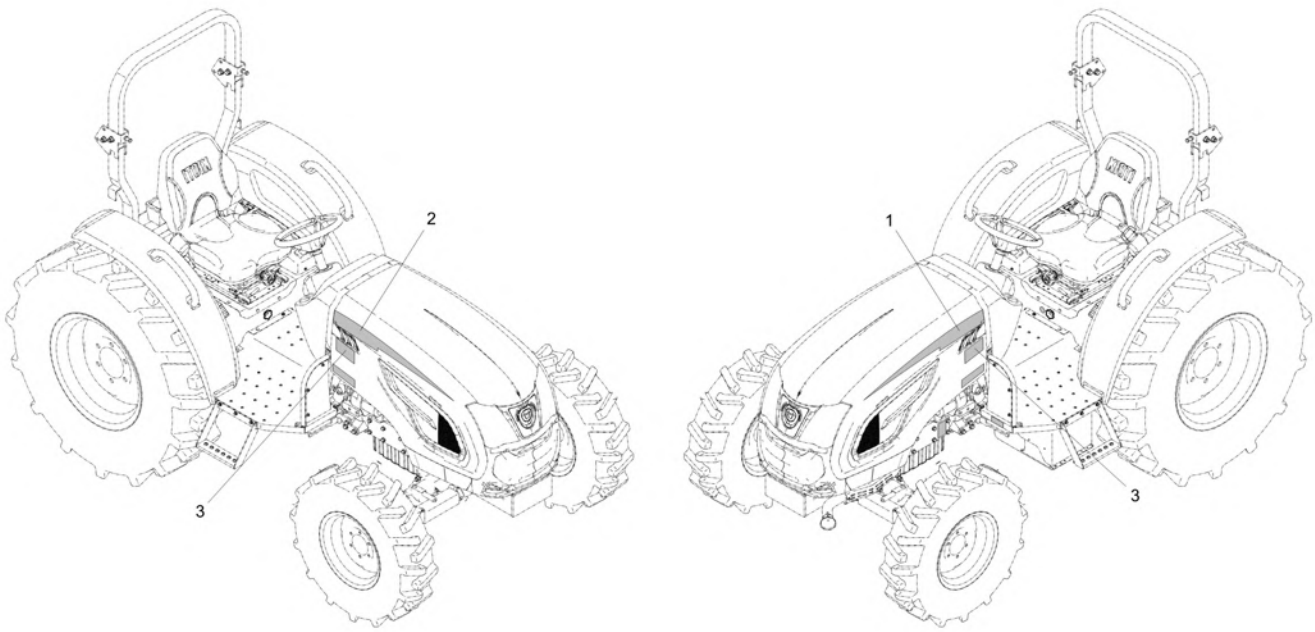

A : DK4510

No.	Part Number	Description	Qty A	Qty B	Qty C	Qty D	Qty E	I.C	Remark
1	T5715-55411	BRAND LABEL, LH	1						
2	T5715-55431	BRAND LABEL, RH	1						
3	T5758-55451	LABEL, MODEL DK4510	2						

----> Old replace New
<----> Interchangeable
* Please place an order assy(*)
<---- New replace Old
<-O-> Interchangeable with another part(s)
<-X-> Not interchangeable

https://tractormanualz.com/

TD2-G6D2011

LABEL(MFG CERTIFICATE) GROUP

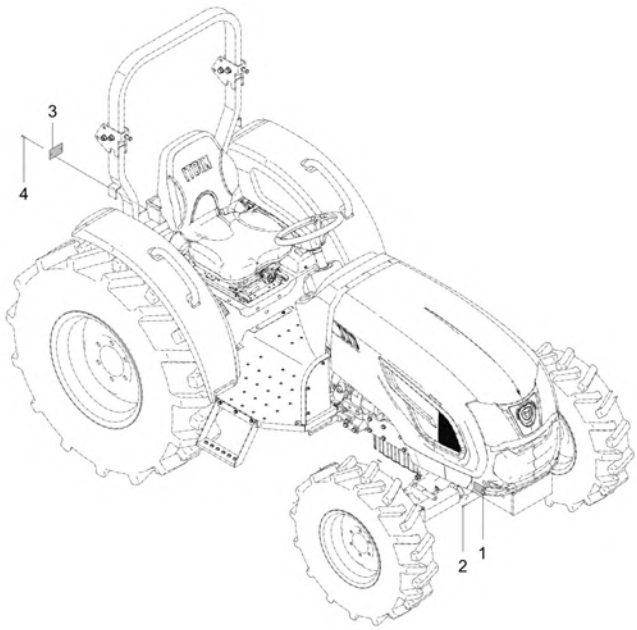

A : DK4510

No.	Part Number	Description	Qty A	Qty B	Qty C	Qty D	Qty E	I.C	Remark
1	T4935-52011	NAME PLATE	1						T0.5
2	05624-20408	RIVET	4						
3	TD26-0936A	LABEL, ROPS OECD CERTIFICATE	1						T0.5
3	TD26-0936B	LABEL, ROPS OECD CERTIFICATE	1					<------	T0.5
4	05624-20408	RIVET	2						

----> Old replace New
<---> Interchangeable
* Please place an order assy(*)
<---- New replace Old
<-O-> Interchangeable with another part(s)
<-X-> Not interchangeable

https://tractormanualz.com/

TD2-G6F4503

REAR VIEW MIRROR GROUP

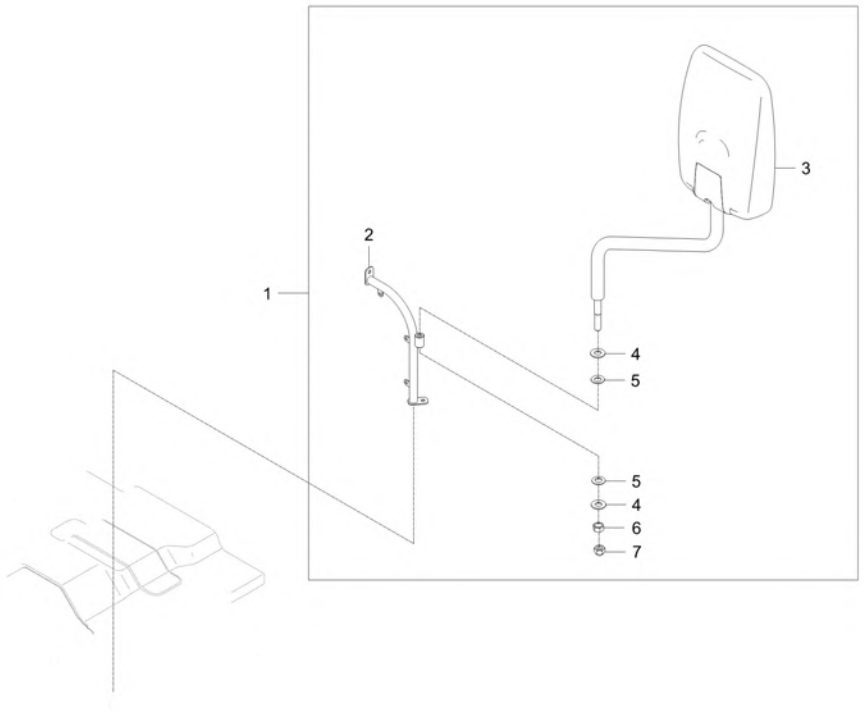

A : DK4510

No.	Part Number	Description	Qty A	Qty B	Qty C	Qty D	Qty E	I.C	Remark
1	T5715-A5011	ASS'Y, REAR VIEW MIRROR	1						
2	T5710-51871	Frame	1						N
2	T5710-51872	MUD GUARD FRAME, LH v	1					<----->	-
3	T5565-88201	REAR VIEW MIRROR	1						
4	04013-50100	PLAIN WASHER	2						M10
5	T4668-83301	SPRING	2						
6	02176-50100	NUT v	1						M10XP1.25
7	44366-4723-1	NUT,CAP	1						

----> Old replace New
<---- New replace Old
<-X-> Not interchangeable
<---> Interchangeable
<-O-> Interchangeable with another part(s)
* Please place an order assy(*)

https://tractormanualz.com/

TD2-G6F9003

ACCESSORIES_SERVICE PARTS GROUP

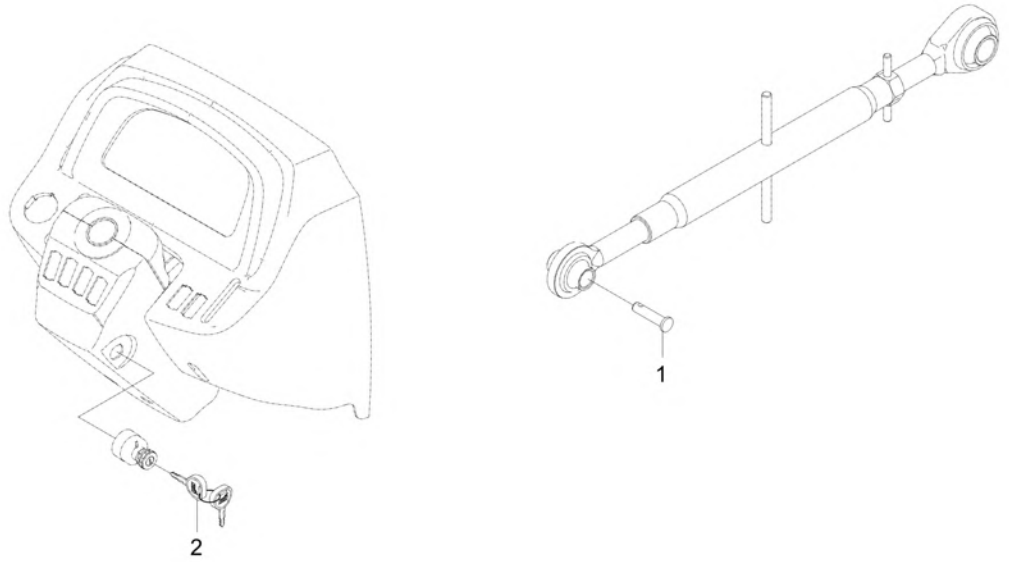

A : DK4510

No.	Part Number	Description	Qty A	Qty B	Qty C	Qty D	Qty E	I.C	Remark
1	T4620-85392	PIN, TOP LINK	1						DIA19
2	T5520-75191	DOUBLE SIDED KEY ASSY v	1						
2	TG35-0114A	ASSY KEY	1					<------	

----> Old replace New
<---> Interchangeable
* Please place an order assy(*)
<---- New replace Old
<-O-> Interchangeable with another part(s)
<-X-> Not interchangeable

https://tractormanualz.com/

TD2-G612509

RADIATOR GROUP

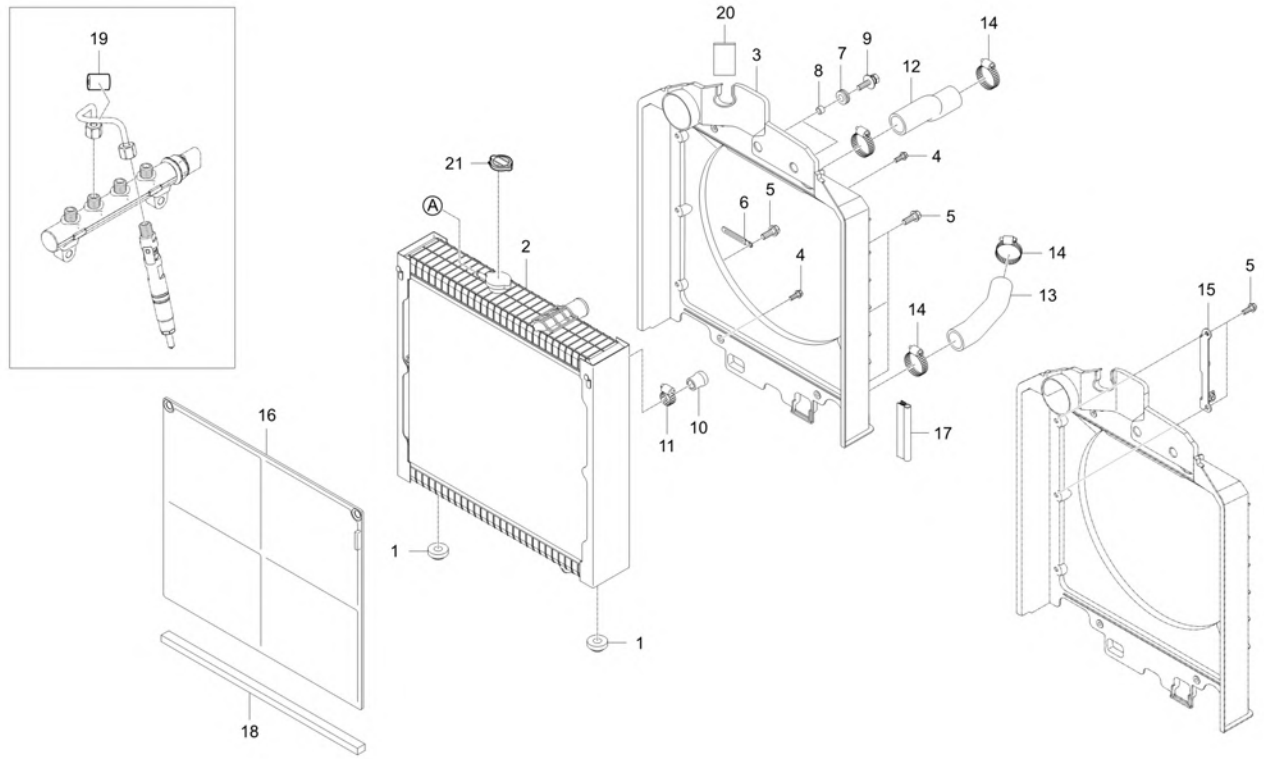

A : DK4510

No.	Part Number	Description	Qty A	Qty B	Qty C	Qty D	Qty E	I.C	Remark
1	T4125-13561	CUSHION	2						
2	TD26-1188A	ASSY RADIATOR-OS	1						
3	T5710-50424	SHROUD	1						-
4	T4625-55441	BOLT FLANGE	4						
5	T2185-70491	BOLT	6						
6	37150-3447-1	WIR'G CLAMP	1						T0.5
7	T2350-50431	GROMMET	2						
8	T2350-50421	SPACER	2						DIA13.8XT2.3
9	01127-50825	BOLT	2						
10	T5535-50451	CAP, SEALING	1						
11	66204-3623-1	BAND, HOSE	1						
12	T5710-50472	HOSE, COOLING WATER UPR	1						OD44XT5.0
13	T5710-50481	HOSE, COOLING WATER LWR	1						OD44XT5.0
14	E1500-18411	CLAMP BAND	4						
15	T5710-50461	BRACKET, RESERVOIR SUPPORT	1						N
16	T5525-50435	Net-Radiator	1						N
17	T5710-50492	RUBBER(RADIATOR)	2						
18	T5710-50502	SPONGE.RADIATOR	1						N

----> Old replace New <---- New replace Old <-X-> Not interchangeable
<---> Interchangeable <-O-> Interchangeable with another part(s)
* Please place an order assy(*)

https://tractormanualz.com/

TD2-G612509

RADIATOR GROUP

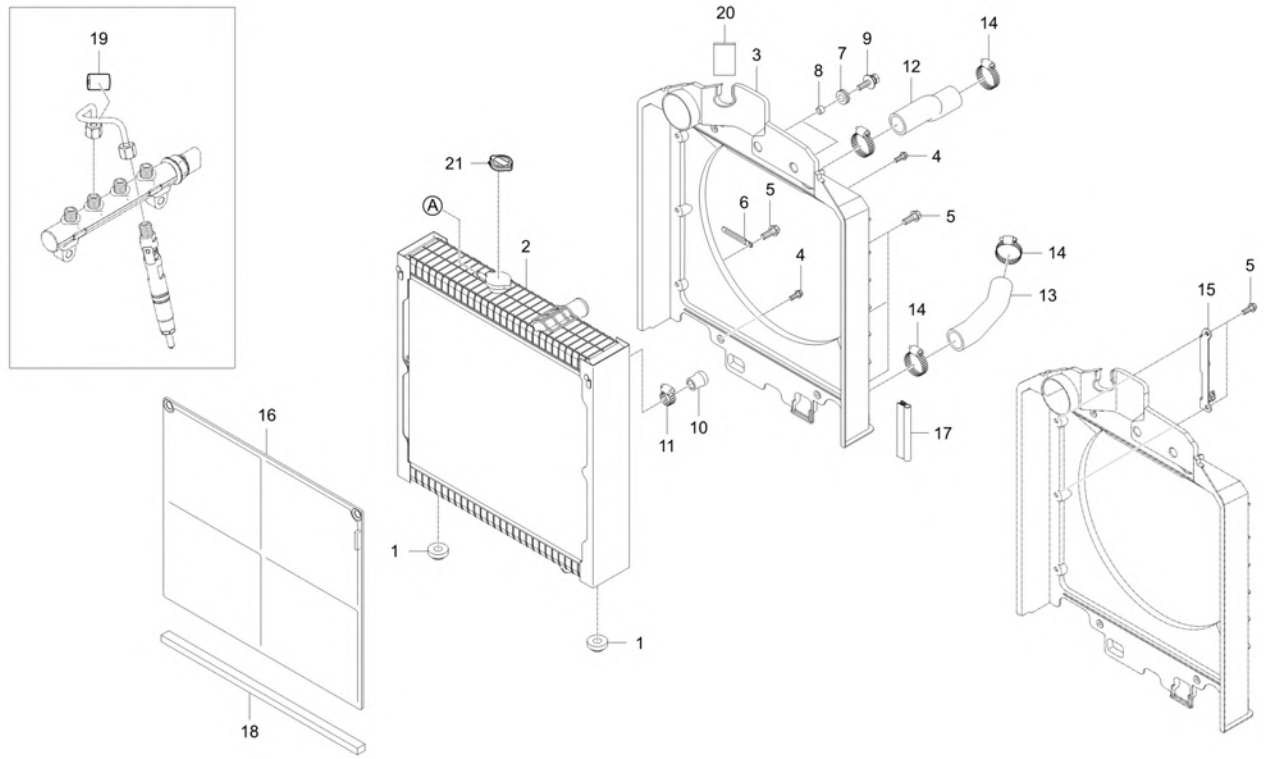

A : DK4510

No.	Part Number	Description	Qty A	Qty B	Qty C	Qty D	Qty E	I.C	Remark
19	TD26-0008A	RING,RUBBER	1						
20	T5245-50231	SPONGE	1						T5
21	U3215-77501	Radiator Cap	1						

----> Old replace New
<----> Interchangeable
* Please place an order assy(*)
<---- New replace Old
<-O-> Interchangeable with another part(s)
<-X-> Not interchangeable

https://tractormanualz.com/

TD2-G614505

FUEL COOLER GROUP

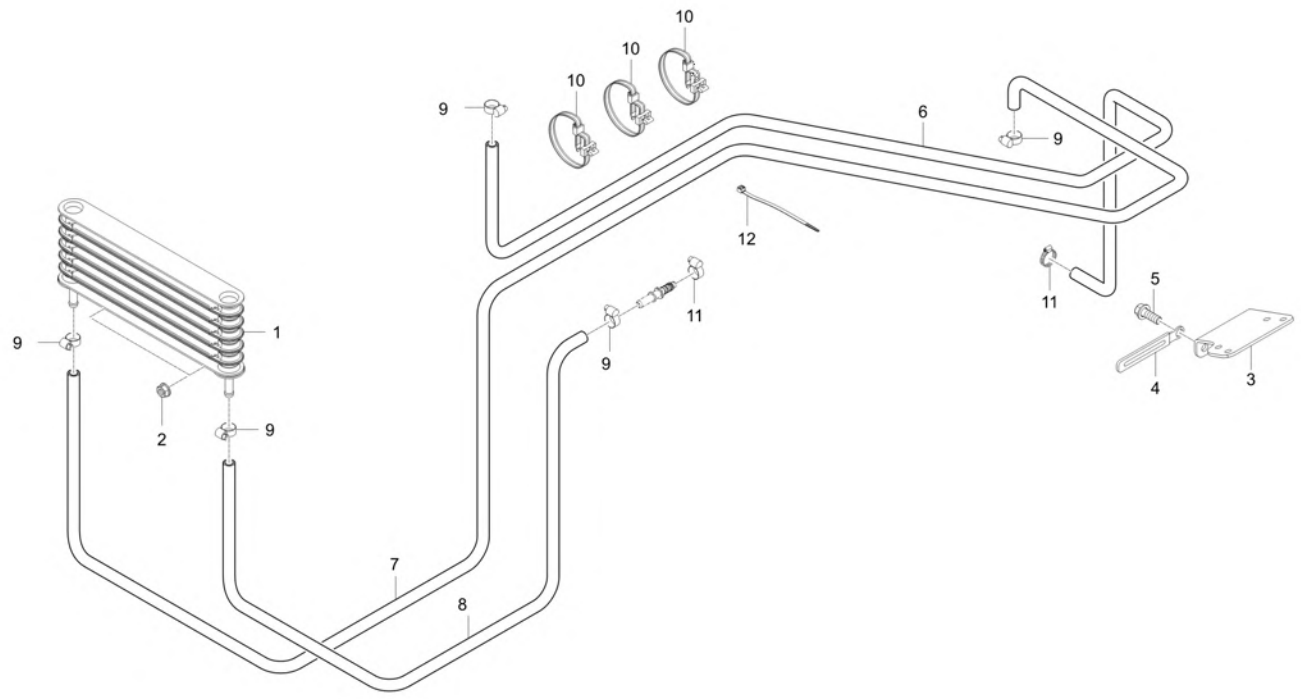

A : DK4510

No.	Part Number	Description	Qty A	Qty B	Qty C	Qty D	Qty E	I.C	Remark
1	T5315-81251	FUEL COOLER	1						
2	02763-50080	FLANGE NUT	2						M8XP1.25
3	T5710-50853	HOSE GUIDE, RH	1						T3.0
4	37150-3447-1	WIR'G CLAMP	1						T0.5
5	01123-50816	Hex Head Cap Screw	2						M8XP1.25
6	T5710-50812	HOSE, FUEL v	1						N
7	T5710-50831	HOSE 2, FUEL	1						OD14XID8
8	TD26-1088A	HOSE, FUEL-4	1						OD14XID8
9	09318-88130	CLAMP, HOSE	6						
10	P5370-82551	BAND, CABLE	3						
11	T4810-67832	CLAMP	1						
12	T2185-82551	CABLE TIE, BLACK / 300	2						L290

----> Old replace New <---- New replace Old <-X-> Not interchangeable
<---> Interchangeable <-O-> Interchangeable with another part(s)
* Please place an order assy(*)

https://tractormanualz.com/

TD2-G615502

BONNET GROUP

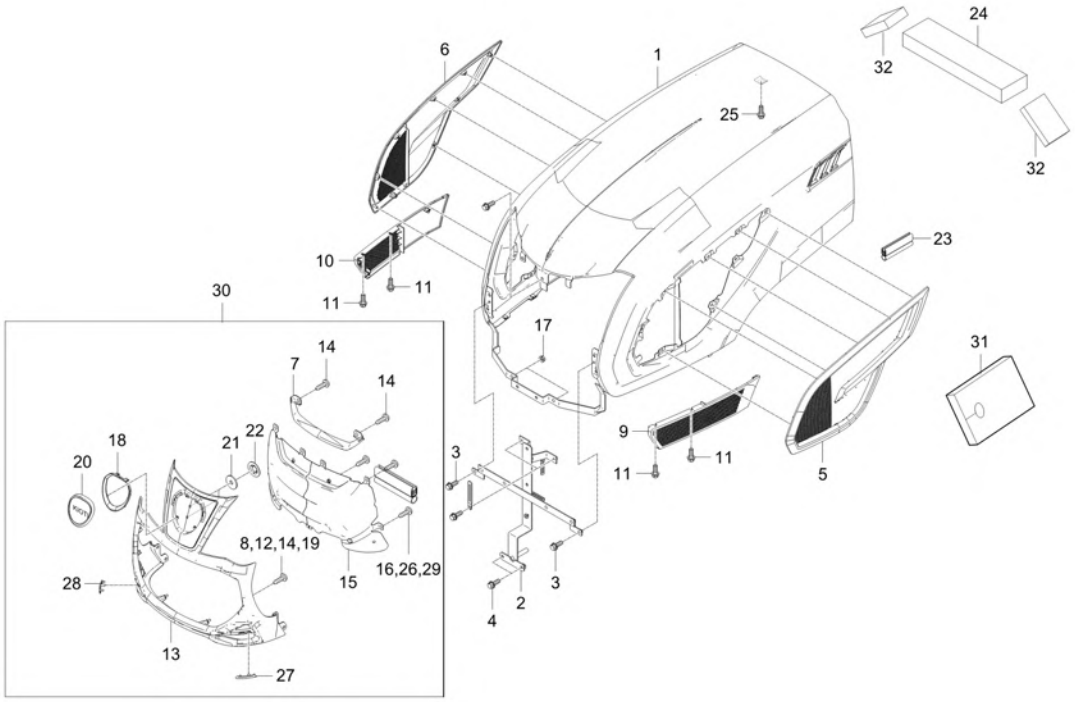

A : DK4510

No.	Part Number	Description	Qty A	Qty B	Qty C	Qty D	Qty E	I.C	Remark
1	T5710-51012	ASSY BONNET dnr v	1 ~ TR7600028						N
1	T5710-51013	BONNET ASSY	1					<------	-
1	T5710-51014	BONNET ASSY dnr v	1 TR7600091 ~ VR7600306					<------	-
1	T5710-51014OE	BONNET ASSY v	1					<------	-
2	T5710-51022	BONNET REINFORCED PLATE, FR dnr v	1 PR7600001 ~ PR7600042						N
2	T5710-51023	BONNET REINFORCED PLATE, FR	1 PR7600043 ~ RR7600028						N
2	T5710-51024	BONNET REINFORCED PLATE, FR v	1 RR7600029 ~ WR7600104					<----->	-
3	01754-50614	FLANGE BOLT	2						
4	01754-50816	BOLT, FLANGE	3						M8XP1.25
5	T5718-51031	SIDE GRILL, LH	1						T3.0
5	T5718-51032	SIDE GRILL,LH	1 RR7600001 ~ WR7600104					<----->	T3.0
6	T5718-51041	SIDE GRILL, RH dnr v	1						T3.0
6	T5718-51042	SIDE GRILL,RH	1 RR7600001 ~ WR7600104					<----->	T3.0
7	T5715-51131	COVER, FRONT GRILL	1						N
8	T5710-51181	SCREW	16						M5 X 10
9	T5710-51053	SIDE GRILL, LH,LWR	1						T3.0
10	T5710-51063	SIDE GRILL, RH,LWR	1						T3.0
11	01754-50614	FLANGE BOLT	4						

----> Old replace New <---- New replace Old <-X-> Not interchangeable
<---> Interchangeable <-O-> Interchangeable with another part(s)
* Please place an order assy(*)

https://tractormanualz.com/

TD2-G615502

BONNET GROUP

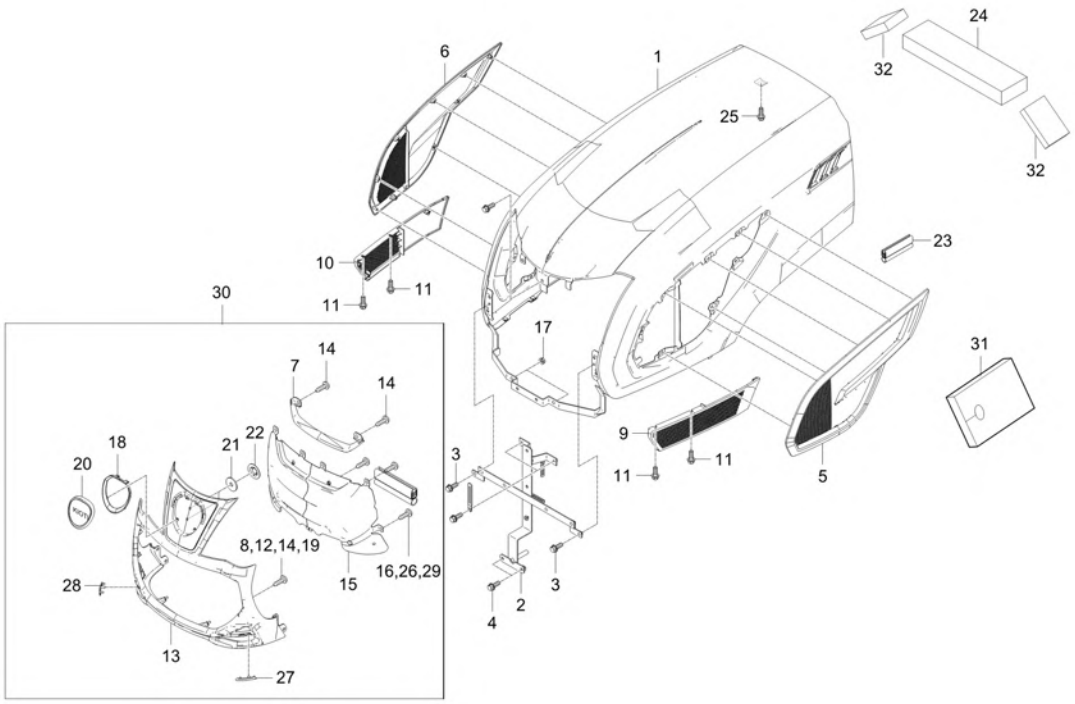

A : DK4510

No.	Part Number	Description	Qty A	Qty B	Qty C	Qty D	Qty E	I.C	Remark
12	T5710-51181	SCREW	2						M5 X 10
13	T5710-51071	GRILL, FRONT dnr v	1						N
14	T5710-51181	SCREW	10						M5 X 10
15	T5710-51081	WIRE	1						T0.8
16	38430-1827-1	SCREW	9						-
17	02761-50060	NUT, FLANGE	3						M6XP1.0
18	T5710-51092	BEGEL, EMBLEM	1						N
19	T5710-51181	SCREW	2						M5 X 10
20	T4620-50701	PLATE, FIXED	4						
21	82KC-0641	PLATE, RUBBER	2						
22	T4620-50701	PLATE, FIXED	2						
23	T5710-51101	RUBBER	1						
23	T5710-51102	RUBBER	1 PR7600043 ~ WR7600104					<------	
24	T5710-51161	SPONGE dnr v	1 ~ PR7600178						N
24	T5710-51162	SPONGE	1 PR7600179 ~ VR7600306					<------	N
24	TD26-1144A	SPONGE, BONNET	1 VR7600307 ~ WR7600104					<----->	-
25	01754-50816	BOLT, FLANGE	1						M8XP1.25
26	38430-1827-1	SCREW	4						-

----> Old replace New
<---- New replace Old
<-X-> Not interchangeable
<---> Interchangeable
<-O-> Interchangeable with another part(s)
* Please place an order assy(*)

https://tractormanualz.com/

TD2-G615502

BONNET GROUP

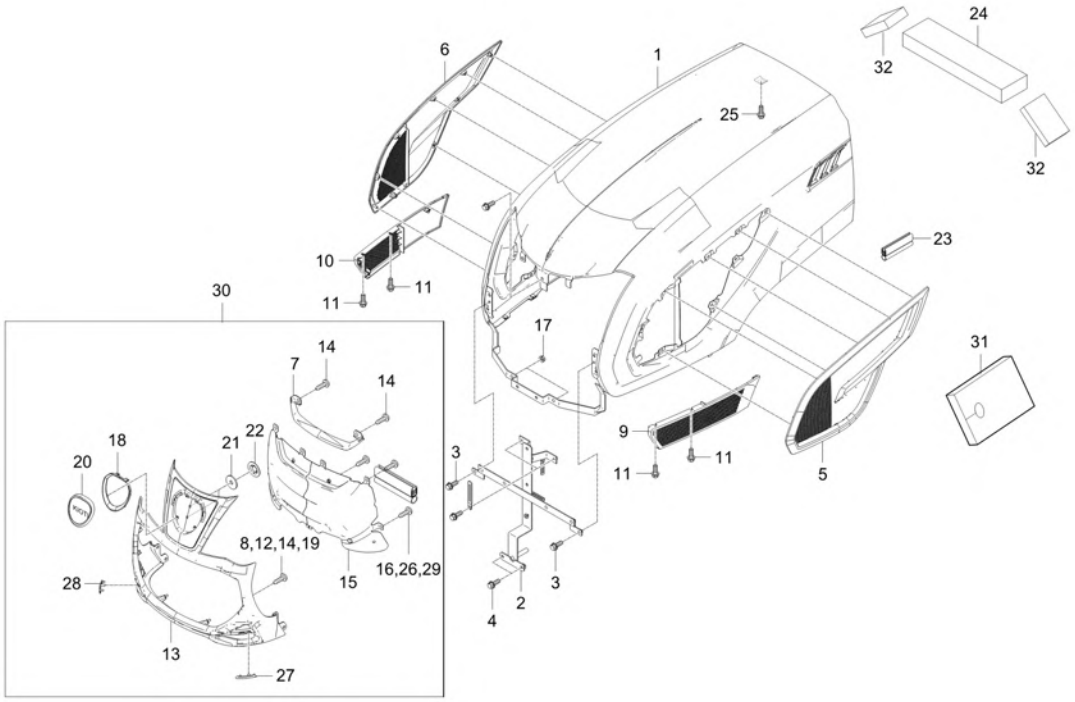

A : DK4510

No.	Part Number	Description	Qty A	Qty B	Qty C	Qty D	Qty E	I.C	Remark
27	T5715-51141	COVER, FRONT GRILL	1						N
28	T5715-51151	COVER, FRONT GRILL	1						N
29	38430-1827-1	SCREW	2						-
30	T5755-51071	BONNET dnr v	1 PR7600001 ~ TR7600154						N
30	T5755-51072	FRONTGRILLTOTALASSY v	1 TR7600155 ~ WR7600104					<------	-
31	T4665-50382	PLATE,HEAT	2						
32	T5855-50542	SPONGE, 4	2						<F6>□<F>95 X60, T2

----> Old replace New
<---- New replace Old
<-X-> Not interchangeable
<---> Interchangeable
<-O-> Interchangeable with another part(s)
* Please place an order assy(*)

https://tractormanualz.com/

TD2-G621009

FRONT AXLE FRAME GROUP

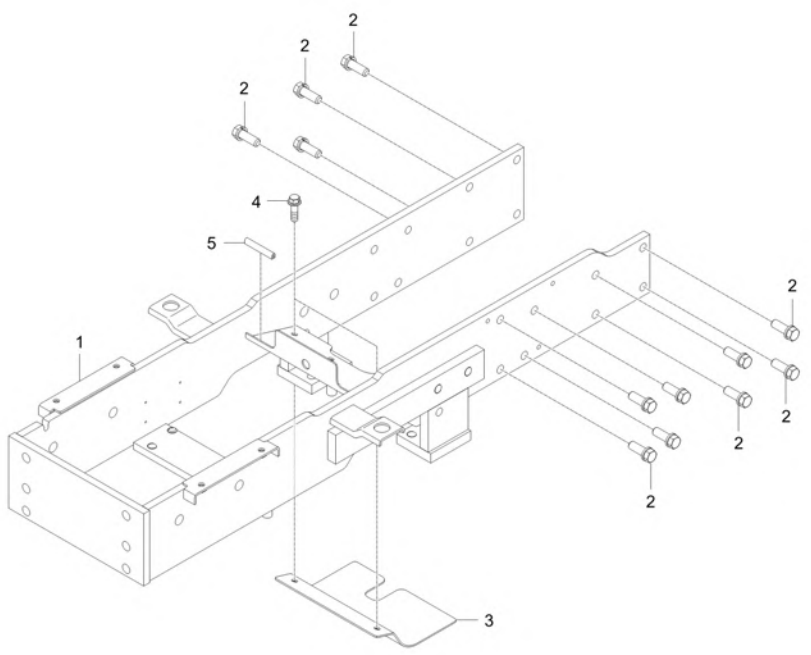

A : DK4510

No.	Part Number	Description	Qty A	Qty B	Qty C	Qty D	Qty E	I.C	Remark
1	TD26-1139A	FRAME, FRONT AXLE	1						-
2	01177-51235	BOLT v	16						M12XP1.25 (9T/스프
3	T5710-50631	PLATE, DIRECTION OF THE WIND	1						N
4	01123-50816	Hex Head Cap Screw	2						M8XP1.25
5	T5710-51251	U-SHAPED RUBBER	2						N

----> Old replace New
<----> Interchangeable
* Please place an order assy(*)
<---- New replace Old
<-O-> Interchangeable with another part(s)
<-X-> Not interchangeable

https://tractormanualz.com/

TD2-G623007

CABIN SUPPORT GROUP

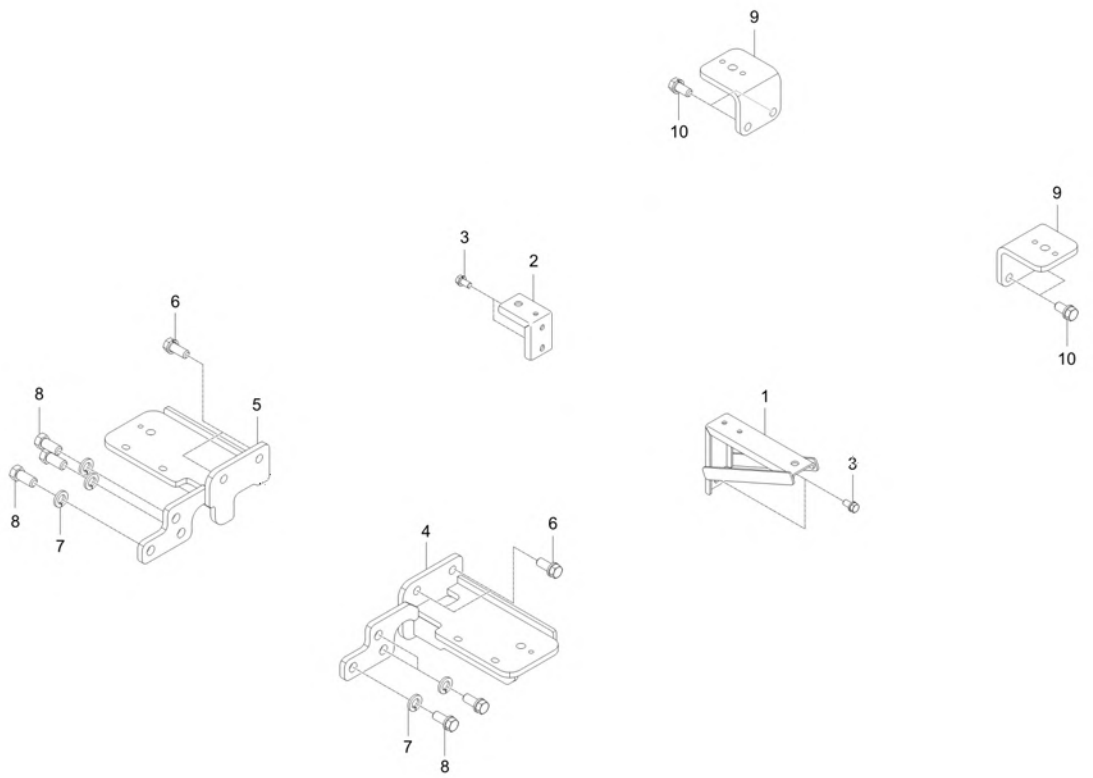

A : DK4510

No.	Part Number	Description	Qty A	Qty B	Qty C	Qty D	Qty E	I.C	Remark
1	T5710-51832	STEP SUPPORT BRACKET, LH v	1						-
2	T5710-51841	STEP SUPPORT BRACKET, RH	1						T3.0
3	01123-50816	Hex Head Cap Screw	4						M8XP1.25
4	TD26-1140A	SUPPORT, STEP-LH	1						-
5	TD26-1141A	SUPPORT, STEP-RH	1						-
6	01133-51230	WASHER BOLT	4						M12*P1.25
7	04512-50140	SPRING WASHER	6						
8	01173-51430	BOLT	6						M14P1.5*30
9	T5710-52042	SEAT FLOOR SUPPORT	2						T9.0
10	01133-51225	BOLT, WASHER v	4						M12*P1.25

----> Old replace New
<---- New replace Old
<-X-> Not interchangeable
<---> Interchangeable
<-O-> Interchangeable with another part(s)
* Please place an order assy(*)

https://tractormanualz.com/

TD2-G661002

SEAT GROUP

(DK4510 : ~ VR7600176)

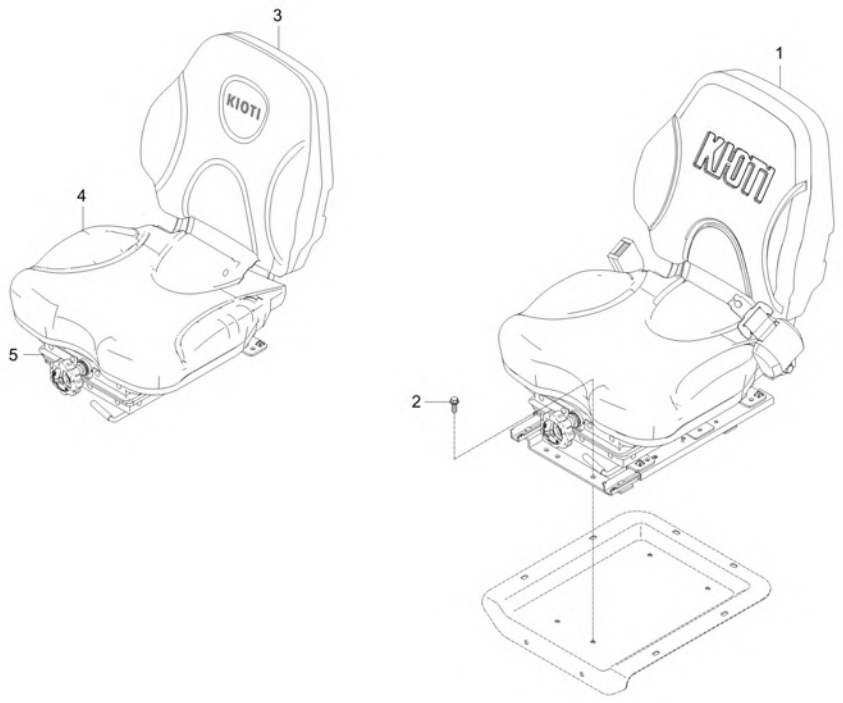

A : DK4510

No.	Part Number	Description	Qty A	Qty B	Qty C	Qty D	Qty E	I.C	Remark
1	T5715-52411	ASS'Y, SEAT	1						
1	T5715-52412	ASSY, SEAT v	1 UR7600017 ~ VR7600176					<------	
2	01754-50816	BOLT, FLANGE	4						M8XP1.25
3	T5715-52411001	BACK PAD ASSY	1						
4	T5715-52411002	CUSHION PAD ASSY	1						
5	T5715-52411004	SUSPENSION ASSY	1						

----> Old replace New
<---> Interchangeable
* Please place an order assy(*)
<---- New replace Old
<-O-> Interchangeable with another part(s)
<-X-> Not interchangeable

https://tractormanualz.com/

TD2-G661010

SEAT GROUP

(DK4510 : VR7600177 ~)

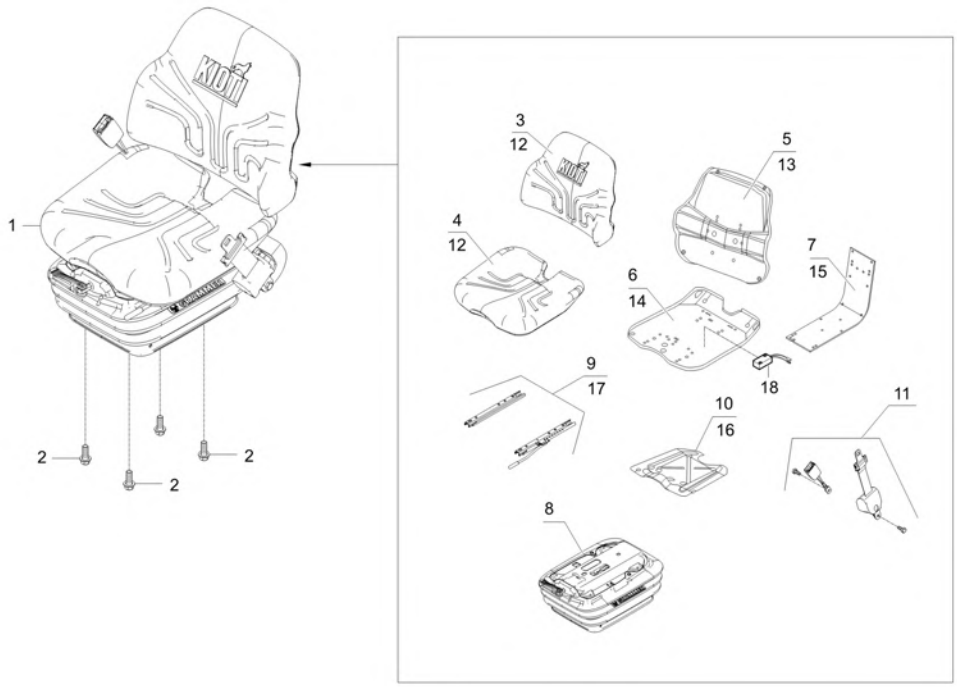

A : DK4510

No.	Part Number	Description	Qty A	Qty B	Qty C	Qty D	Qty E	I.C	Remark
1	TC26-1718A	ASSY SEAT	1						
1	TC26-1718B	ASSY SEAT	1					<------	
1	TC26-1718C	ASSY SEAT	1					<------	
2	01754-50816	BOLT, FLANGE	4						M8XP1.25
3	TC26-1769A	CUSHION, BACK-CPL	1						
3	TC26-1769B	CUSHION, BACK-CPL	1					<------	
4	TC26-1772A	CUSHION-SEAT CPL	1						
5	TC26-1773A	SEAT, BACK-CPL	1						
6	TC26-1774A	SEAT-PAN CPL	1						
6	TC26-1774B	SEAT-PAN CPL	1					<------	
7	TC26-1776A	SEAT, BACK-CPL	1						
8	TC26-1778A	SUSPENSION-MSG283 CPL	1						
9	TC26-1780A	RAIL, SLIDE-CPL	1						
10	TC26-1781A	SWITCH-SEAT CPL	1						
11	TC26-1784A	BELT, SEAT-CPL	1						
12	TC26-1786A	FASTENER-BACKREST CUSHION CPL	1						
13	TC26-1787A	FASTENER-BACKREST CPL	1						
14	TC26-1788A	FASTENER-SEAT PAN CPL	1						

----> Old replace New
<---- New replace Old
<-X-> Not interchangeable
<---> Interchangeable
<-O-> Interchangeable with another part(s)
* Please place an order assy(*)

https://tractormanualz.com/

TD2-G661010

SEAT GROUP

(DK4510 : VR7600177 ~)

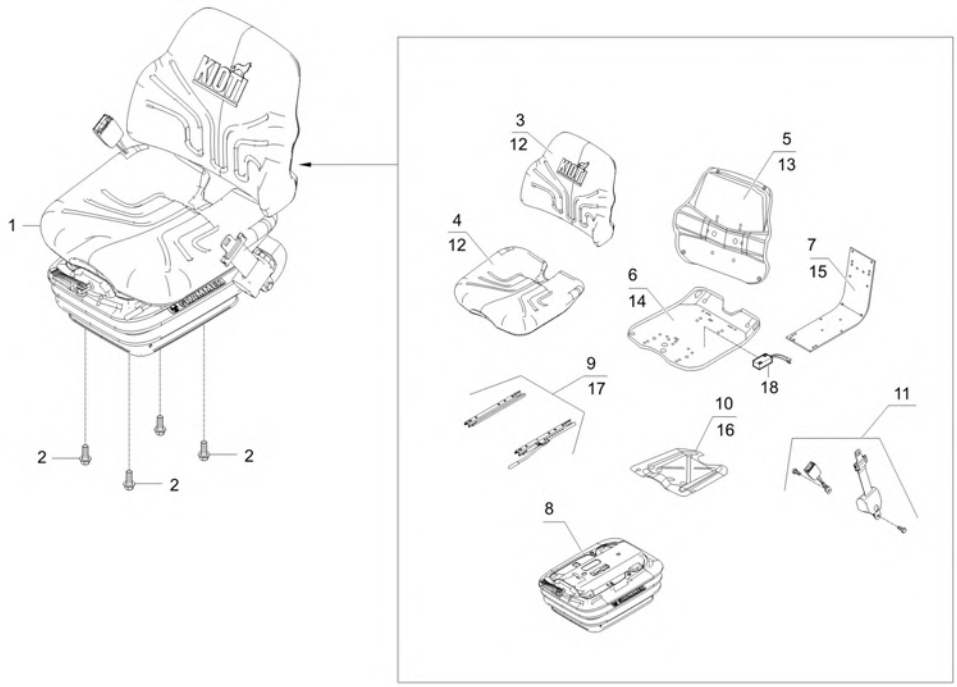

A : DK4510

No.	Part Number	Description	Qty A	Qty B	Qty C	Qty D	Qty E	I.C	Remark
15	TC26-1789A	FASTENER-BACKREST CPL	1						
16	TC26-1790A	FASTENER-SEAT SWITCH CPL	1						
17	TC26-1792A	FASTENER-SLIDE RAIL CPL	1						
18	TC26-1834A	SWITCH-SEAT	1						

----> Old replace New
<----> Interchangeable
* Please place an order assy(*)
<---- New replace Old
<-O-> Interchangeable with another part(s)
<-X-> Not interchangeable

https://tractormanualz.com/

TD2-G662002

STEP MAT GROUP

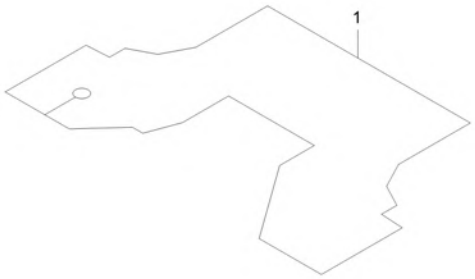

A : DK4510

No.	Part Number	Description	Qty A	Qty B	Qty C	Qty D	Qty E	I.C	Remark
1	T4624-70271	MAT	1						

----> Old replace New
<----> Interchangeable
* Please place an order assy(*)
<---- New replace Old
<-O-> Interchangeable with another part(s)
<-X-> Not interchangeable

https://tractormanualz.com/

TD2-G662003

STEP MAT GROUP

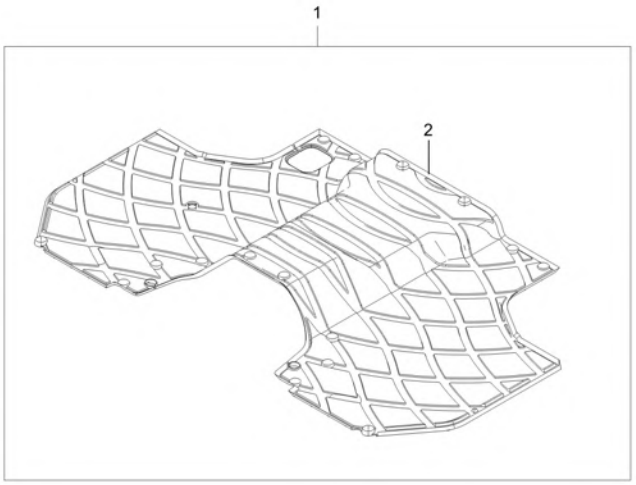

A : DK4510

No.	Part Number	Description	Qty A	Qty B	Qty C	Qty D	Qty E	I.C	Remark
1	T5715-A5041	STEP MAT Kit	1						
2	T5715-51821	MAT use DKA123 v	1						N

----> Old replace New
<----> Interchangeable
* Please place an order assy(*)
<---- New replace Old
<-O-> Interchangeable with another part(s)
<-X-> Not interchangeable

https://tractormanualz.com/

TD2-G694004

TOWING GROUP

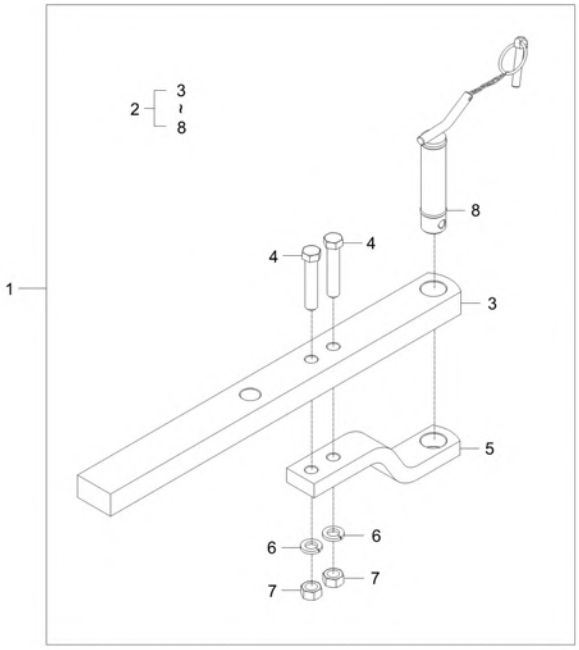

A : DK4510

No.	Part Number	Description	Qty A	Qty B	Qty C	Qty D	Qty E	I.C	Remark
1	T5715-A5071	DRAW BAR KIT	1						
2	T2611-29723	ASSY,SWING DRAWBAR	1						
3	T2611-29731	DRAW BAR v	1						
4	01176-51680	BOLT	1						M16*P1.25 (9T)
5	T2611-29841	BRACKET	1						T22
6	04512-50160	WASHER, SPRING	1						M16
7	02076-50160	NUT	1						
8	T4186-29851	PIN, CONNECT	1						

----> Old replace New
<----> Interchangeable
* Please place an order assy(*)
<---- New replace Old
<-O-> Interchangeable with another part(s)
<-X-> Not interchangeable

https://tractormanualz.com/

TD2-G611001

AIR CLEANER GROUP

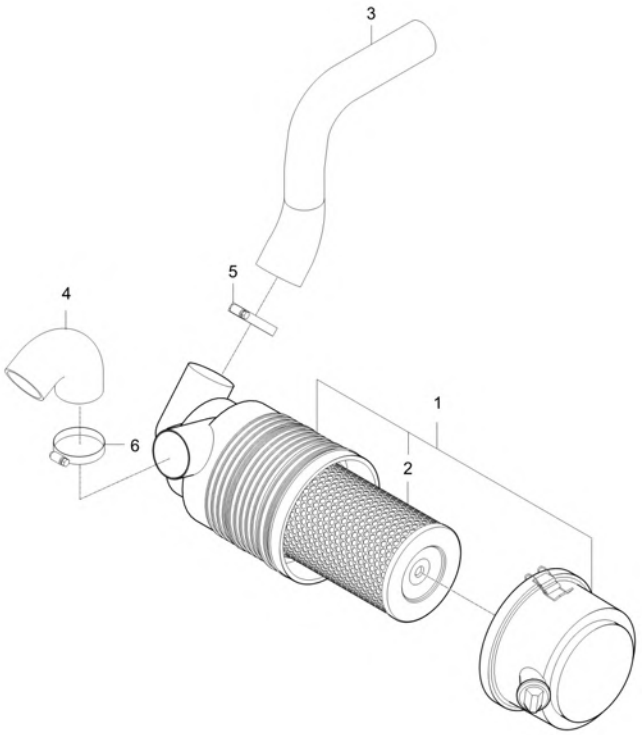

A : DK4510

No.	Part Number	Description	Qty A	Qty B	Qty C	Qty D	Qty E	I.C	Remark
1	T4624-11012	FILTER, AIR ASSY CLEANER v	1						
2	E7230-11081	ELEMENT, FILTER ASSY 1 sp dnr v	1						
3	T5710-50011	HOSE, INLET	1						T5.0
3	T5710-50012	HOSE, INLET	1					<----->	T5.0
3	T5710-50013	HOSE, INLET	1					<------	T5.0
3	T5710-50014	HOSE, INLET	1 RR7600029 ~ WR7600192					<------	T5.0
4	T5235-11051	TUBE, INLET	1						T5.0
4	T5710-50041	HOSE, INLET	1 RR7600001 ~ RR7600054					<----->	N
4	T5710-50042	HOSE, INLET	1 RR7600055 ~ WR7600192					<----->	-
5	T5710-58041	HOSE CLAMP	1						DIA 50-70
6	KX97382-S51	ASSY, CLAMP v	3						DIA70스탠 76#
6	T5710-58051	HOSE CLAMP	2 RR7600001 ~ WR7600192					<----->	DIA 60-80

----> Old replace New
<---- New replace Old
<-X-> Not interchangeable
<---> Interchangeable
<-O-> Interchangeable with another part(s)
* Please place an order assy(*)

https://tractormanualz.com/

TD2-G611202

AIR CLEANER SUPPORT GROUP

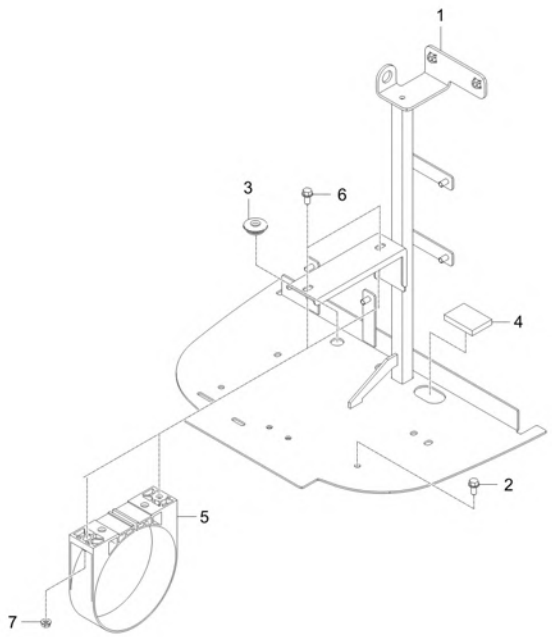

A : DK4510

No.	Part Number	Description	Qty A	Qty B	Qty C	Qty D	Qty E	I.C	Remark
1	T5710-50023	SUPPORT, AIRCLEANER	1 PR7600001 ~ PR7600178						N
1	T5710-50024	SUPPORT, AIRCLEANER	1 PR7600179 ~ TR7600154					<----->	N
1	T5710-50025	SUPPORT, AIR CLEANER	1 TR7600155 ~ VR7600008					<------	-
1	T5710-50026	SUPPORT, AIR CLEANER	1 VR7600009 ~ WR7600192					<----->	-
2	01754-50816	BOLT, FLANGE	4						M8XP1.25
3	T2350-50431	GROMMET	2						
4	T2350-50021	SPONGE	1						
5	E7230-11222	HOLDER,AIRCLEANER	1						
6	01754-50825	BOLT, FLANGE	2						M8XP1.25
7	02763-50080	FLANGE NUT	1						M8XP1.25

----> Old replace New
<---> Interchangeable
* Please place an order assy(*)
<---- New replace Old
<-O-> Interchangeable with another part(s)
<-X-> Not interchangeable

https://tractormanualz.com/

TD2-G612002

MUFFLER GROUP

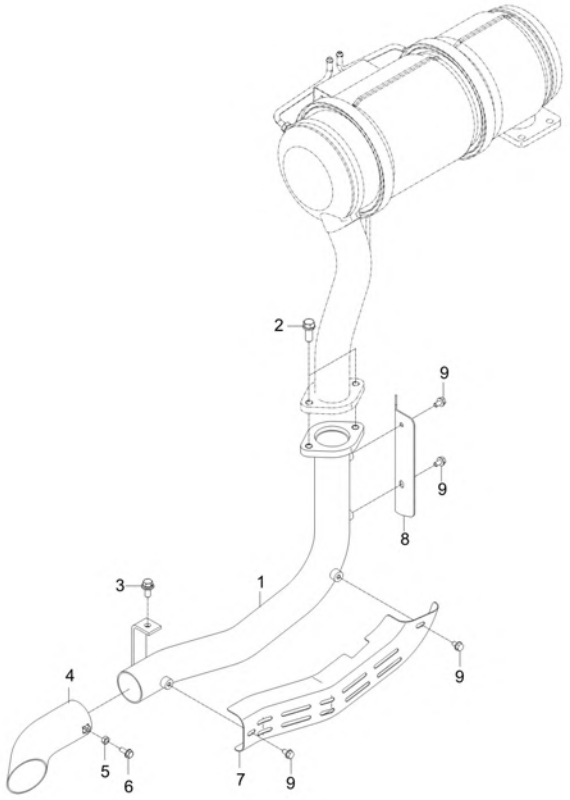

A : DK4510

No.	Part Number	Description	Qty A	Qty B	Qty C	Qty D	Qty E	I.C	Remark
1	T5710-50221	TUBE, EXHAUST	1						N
2	01133-51025	BOLT	2						M10XP1.25
3	01125-50820	BOLT, WASHER	1						M8XP1.25
4	T5710-50231	TUBE 2, EXHAUST	1						N
5	02056-50060	NUT	1						M6*P1.0
6	T4625-55431	FLANGE BOLT	1						
7	T5710-50252	PROTECTION COVER	1						T1.2
8	T5710-50263	PROTECTION COVER	1 PR7600001 ~ WR7600192						T2.0
8	T5710-50264	PROTECTION COVER,RR	1					<------	T2.0
9	01025-50612	WASHER BOLT	4						M6P1.0

----> Old replace New
<---> Interchangeable
* Please place an order assy(*)
<---- New replace Old
<-O-> Interchangeable with another part(s)
<-X-> Not interchangeable

https://tractormanualz.com/

TD2-G612501

RADIATOR GROUP

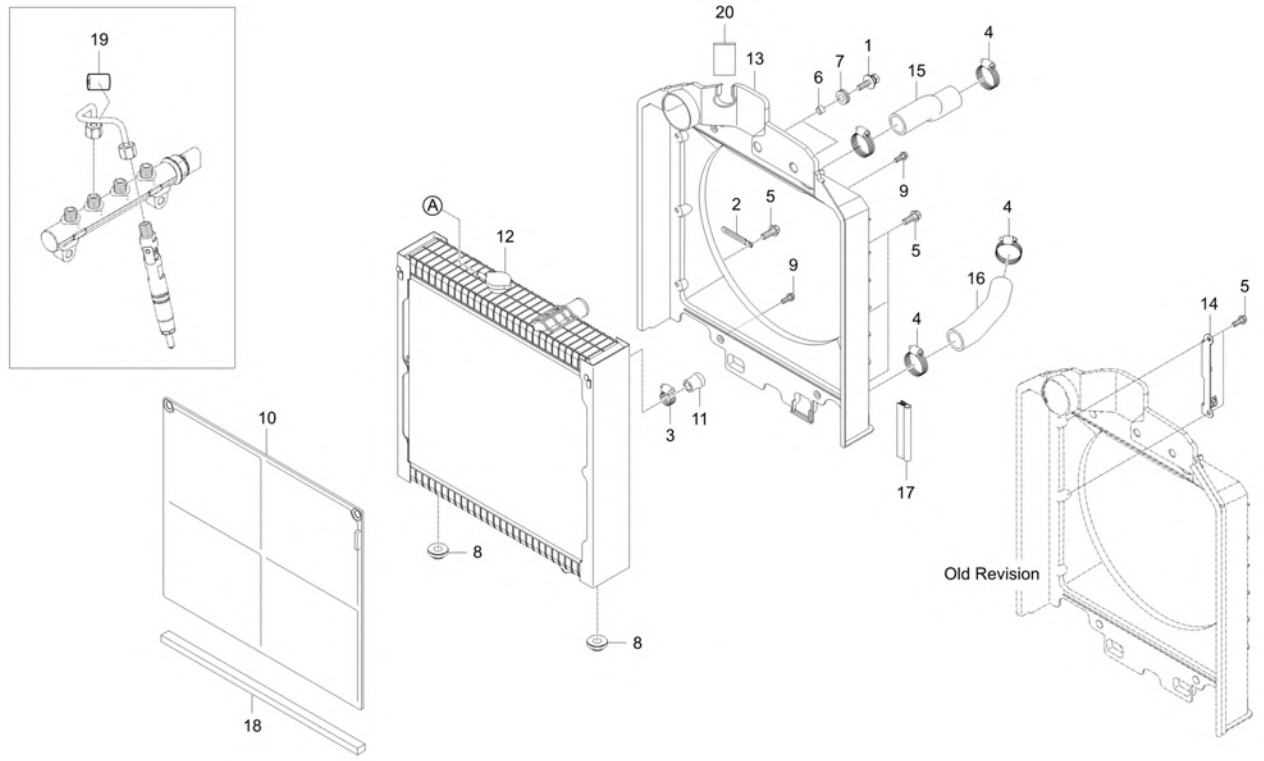

A : DK4510

No.	Part Number	Description	Qty A	Qty B	Qty C	Qty D	Qty E	I.C	Remark
1	01127-50825	BOLT	2						
2	37150-3447-1	WIR'G CLAMP	1						T0.5
3	66204-3623-1	BAND, HOSE	1						
4	E1500-18411	CLAMP BAND	4						
5	T2185-70491	BOLT	6						
6	T2350-50421	SPACER	2						DIA13.8XT2.3
7	T2350-50431	GROMMET	2						
8	T4125-13561	CUSHION	2						
9	T4625-55441	BOLT FLANGE	4						
10	T5525-50435	Net-Radiator	1						N
11	T5535-50451	CAP, SEALING	1						
12	T5710-50411	RADIATOR ASSY	1						
12	T5710-50412	RADIATOR ASSY	1					<--O-->	
13	T5710-50421	SHROUD	1						N
13	T5710-50422	SHROUD dnr v	1					<--O-->	-
13	T5710-50423	SHROUD v	1						-
13	T5710-50424	SHROUD	1					<----->	-
14	T5710-50461	BRACKET, RESERVOIR SUPPORT	1						N

----> Old replace New
<----> Interchangeable
* Please place an order assy(*)
<---- New replace Old
<-O-> Interchangeable with another part(s)
<-X-> Not interchangeable

https://tractormanualz.com/

TD2-G612501

RADIATOR GROUP

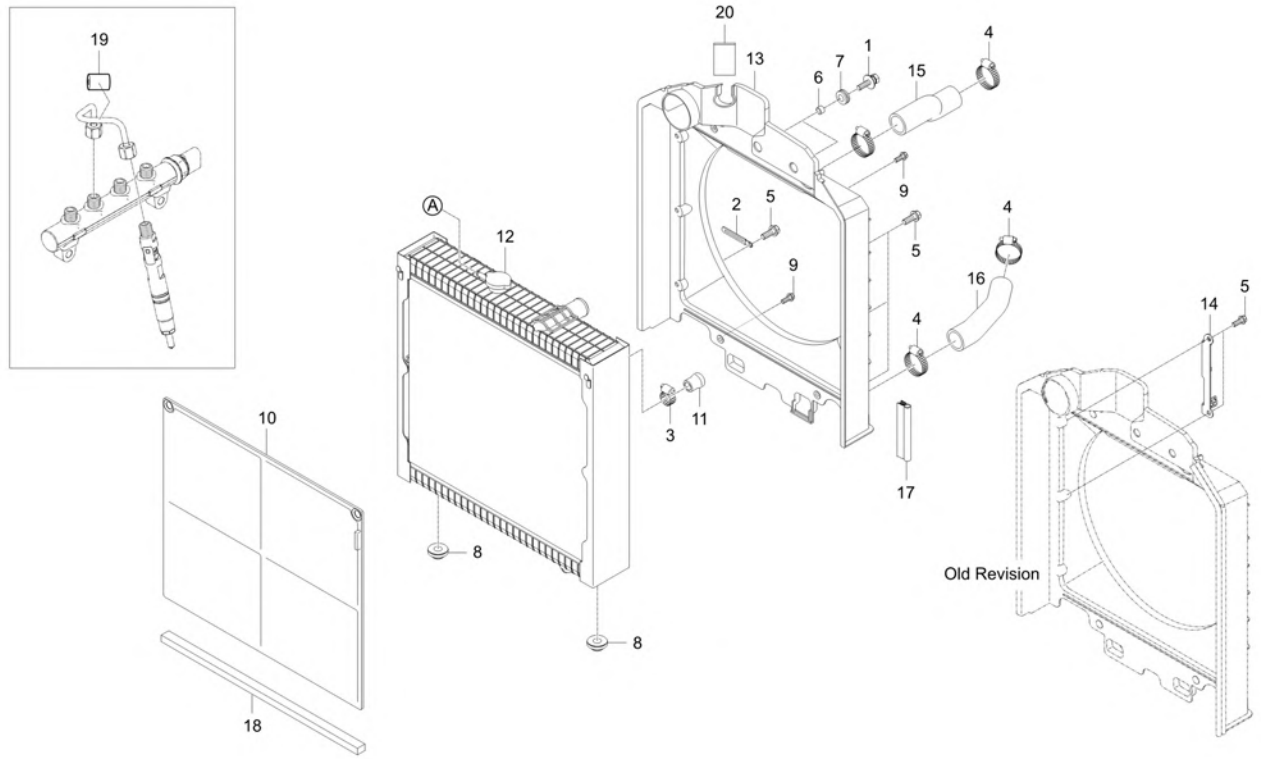

A : DK4510

No.	Part Number	Description	Qty A	Qty B	Qty C	Qty D	Qty E	I.C	Remark
15	T5710-50472	HOSE, COOLING WATER UPR	1						OD44XT5.0
16	T5710-50481	HOSE, COOLING WATER LWR	1						OD44XT5.0
17	T5710-50492	RUBBER(RADIATOR)	2						
18	T5710-50502	SPONGE.RADIATOR	1						N
19	TD26-0008A	RING,RUBBER	1						
20	T5245-50231	SPONGE	1						T5

----> Old replace New
<---- New replace Old
<-X-> Not interchangeable
<---> Interchangeable
<-O-> Interchangeable with another part(s)
* Please place an order assy(*)

https://tractormanualz.com/

TD2-G612701

COOLANT RESERVIOR GROUP

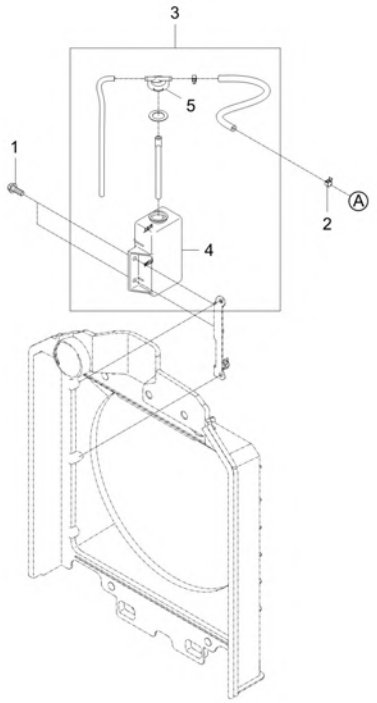

A : DK4510

No.	Part Number	Description	Qty A	Qty B	Qty C	Qty D	Qty E	I.C	Remark
1	01754-50816	BOLT, FLANGE	2						M8XP1.25
2	14911-4275-1	CLIP, TUBE	1						T0.8*#12
3	T5710-50451	RESERVOIR ASSY	1						N
4	T2350-13612	TANK, WATER	1						
5	T5525-50721	CAP v	1						

----> Old replace New <---- New replace Old <-X-> Not interchangeable
<---> Interchangeable <-O-> Interchangeable with another part(s)
* Please place an order assy(*)

https://tractormanualz.com/

TD2-G614503

FUEL COOLER GROUP

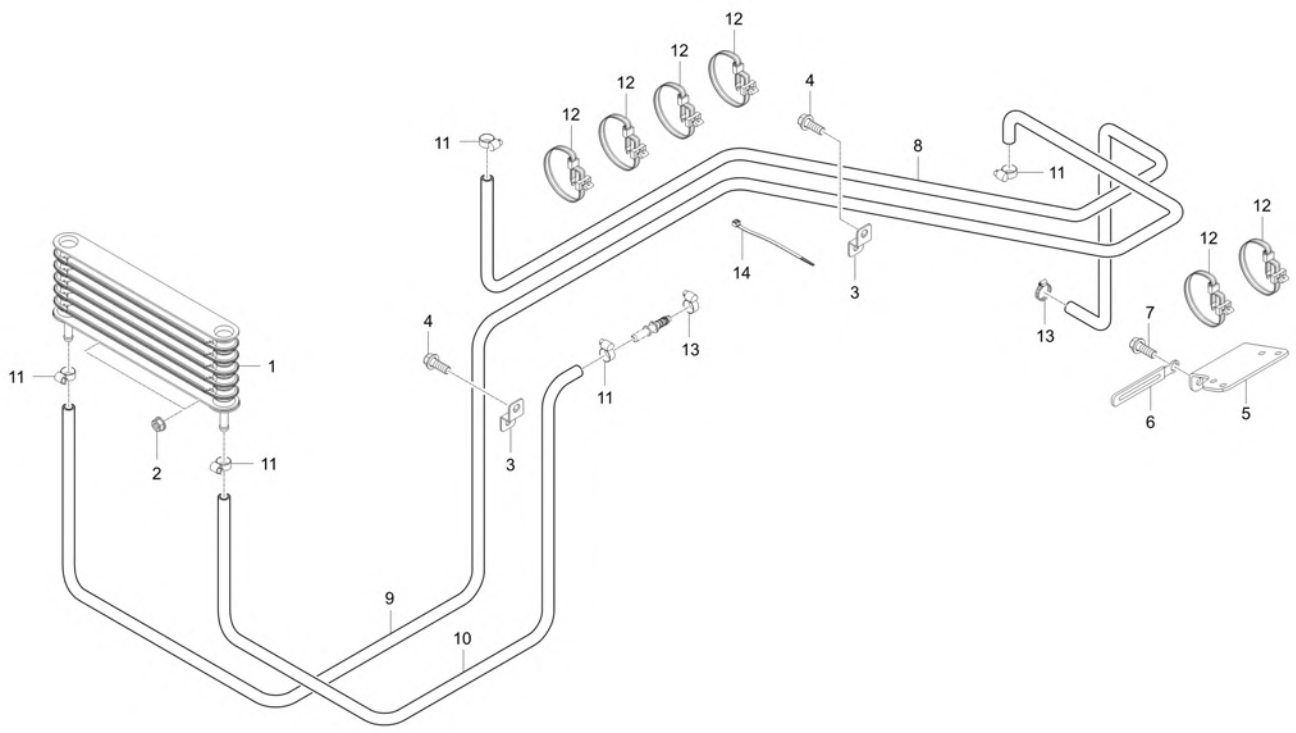

A : DK4510

No.	Part Number	Description	Qty A	Qty B	Qty C	Qty D	Qty E	I.C	Remark
1	T5315-81251	FUEL COOLER	1						
2	02763-50080	FLANGE NUT	2						M8XP1.25
3	T5250-68771	BRACKET	2						
4	01125-50816	BOLT, WASHER	2						M8*P1.25
5	T5710-50853	HOSE GUIDE, RH	1						T3.0
6	37150-3447-1	WIR'G CLAMP	1						T0.5
7	01123-50816	Hex Head Cap Screw	2						M8XP1.25
8	T5710-50812	HOSE, FUEL v	1						N
9	T5710-50831	HOSE 2, FUEL	1						OD14XID8
10	TD26-1088A	HOSE, FUEL-4	1						OD14XID8
11	09318-88130	CLAMP, HOSE	6						
12	P5370-82551	BAND, CABLE	4						
13	T4810-67832	CLAMP	1						
14	T2185-82551	CABLE TIE, BLACK / 300	1						L290

----> Old replace New
<---- New replace Old
<-X-> Not interchangeable
<---> Interchangeable
<-O-> Interchangeable with another part(s)
* Please place an order assy(*)

https://tractormanualz.com/

TD2-G616001

BONNET SUPPORT GROUP

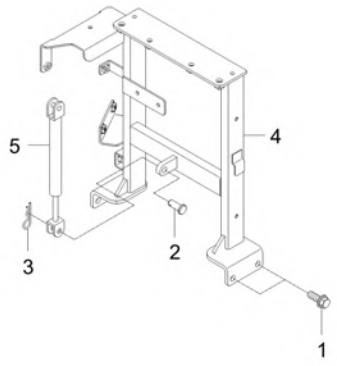

A : DK4510

No.	Part Number	Description	Qty A	Qty B	Qty C	Qty D	Qty E	I.C	Remark
1	01133-51020	BOLT	4						M10XP1.25
2	05122-51025	JOINT PIN	2						DIA10*25
3	05515-51000	Split Pin	2						DIA10
4	T5710-51113	SUPPORT ASSY, BONNET	1 ~ UR7600100						-
4	T5710-51114	SUPPORT ASSY, BONNET v	1 UR7600101 ~ WR7600104					<----->	-
5	T5710-51191	AIR CYLINDER	1						

----> Old replace New
<---> Interchangeable
* Please place an order assy(*)
<---- New replace Old
<-O-> Interchangeable with another part(s)
<-X-> Not interchangeable

https://tractormanualz.com/

TD2-G616101

BONNET LATCH GROUP

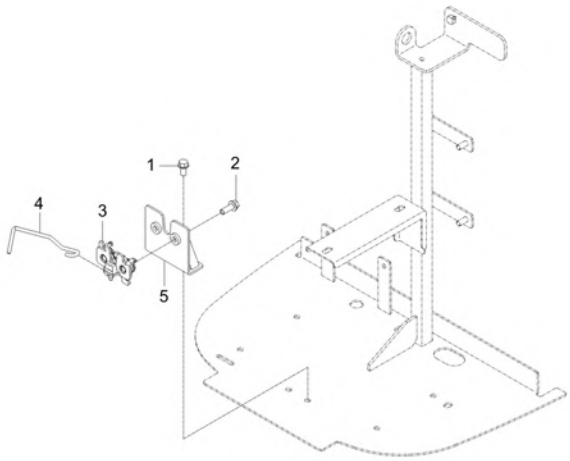

A : DK4510

No.	Part Number	Description	Qty A	Qty B	Qty C	Qty D	Qty E	I.C	Remark
1	01125-50820	BOLT, WASHER	2						M8XP1.25
2	01754-50820	BOLT, FLANGE	2						M8XP1.25
3	T4145-60582	LATCH ASSY	1						
4	T5710-50061	ROD	1						DIA 5
5	T5710-50072	LATCH BRACKET v	1						N

----> Old replace New
<---- New replace Old
<-X-> Not interchangeable
<---> Interchangeable
<-O-> Interchangeable with another part(s)
* Please place an order assy(*)

https://tractormanualz.com/

TD2-G617001

BATTERY FIXING GROUP

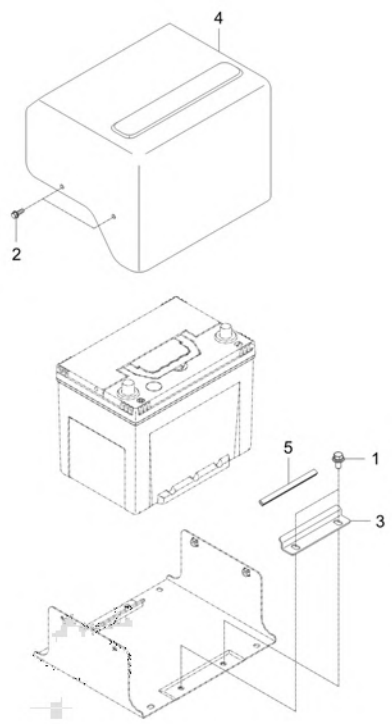

A : DK4510

No.	Part Number	Description	Qty A	Qty B	Qty C	Qty D	Qty E	I.C	Remark
1	01125-50818	BOLT, WASHER	2						M8P1.25
2	01754-50610	BOLT, FLANGE	4						M6XP1.0
3	T2350-50252	BRACKET, BATTERY v	1						T2.3
4	T5710-51222	BATTERY COVER, UPPER	1						T3.0
5	T5710-51251	U-SHAPED RUBBER	1						N

----> Old replace New
<---> Interchangeable
* Please place an order assy(*)
<---- New replace Old
<-O-> Interchangeable with another part(s)
<-X-> Not interchangeable

https://tractormanualz.com/

TD2-G617201

ECU BRACKET GROUP

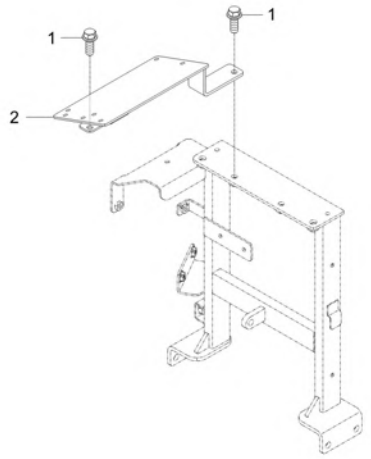

A : DK4510

No.	Part Number	Description	Qty A	Qty B	Qty C	Qty D	Qty E	I.C	Remark
1	01123-50820	BOLT, WASHER v	2						M8XP1.25
2	T5710-51121	HOLDER,BONNETSUPPORT	1						N

----> Old replace New
<----> Interchangeable
* Please place an order assy(*)
<---- New replace Old
<-O-> Interchangeable with another part(s)
<-X-> Not interchangeable

https://tractormanualz.com/

TD2-G621001

FRONT AXLE FRAME GROUP

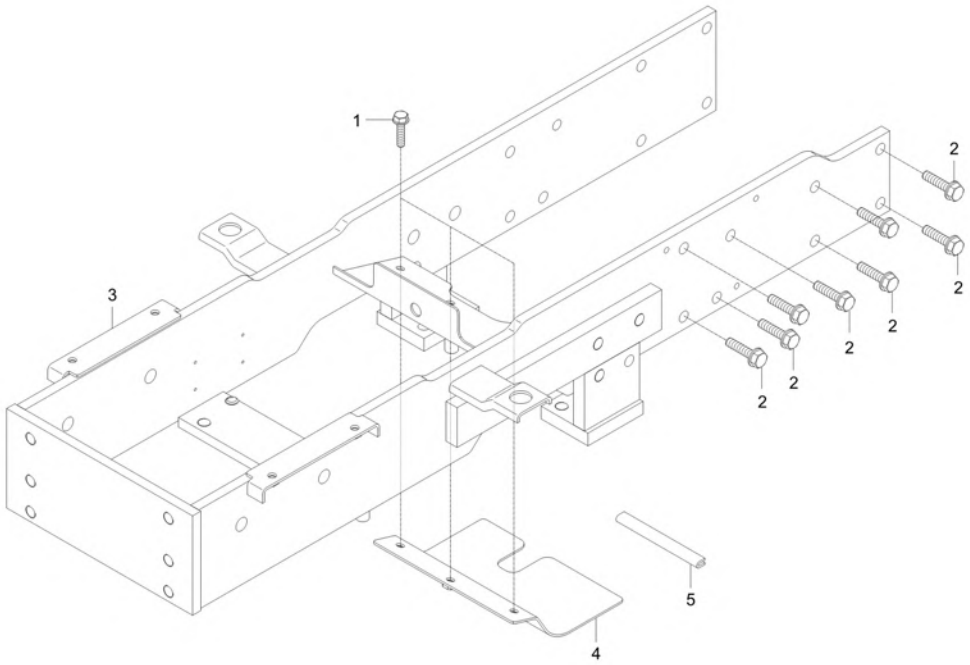

A : DK4510

No.	Part Number	Description	Qty A	Qty B	Qty C	Qty D	Qty E	I.C	Remark
1	01123-50816	Hex Head Cap Screw	2						M8XP1.25
2	01177-51235	BOLT v	16						M12XP1.25 (9T/스프
3	T5710-50612	FRAME, FRONT-AXLE	1						N
3	T5710-50613	FRAME, FRONT-AXLE	1					<----->	N
3	T5710-50614	FRAME, FRONT-AXLE	1					<------	-
4	T5710-50631	PLATE, DIRECTION OF THE WIND	1						N
5	T5710-51251	U-SHAPED RUBBER	2						N

----> Old replace New
<----> Interchangeable
* Please place an order assy(*)
<---- New replace Old
<-O-> Interchangeable with another part(s)
<-X-> Not interchangeable

https://tractormanualz.com/

TD2-G623001

CABIN SUPPORT GROUP

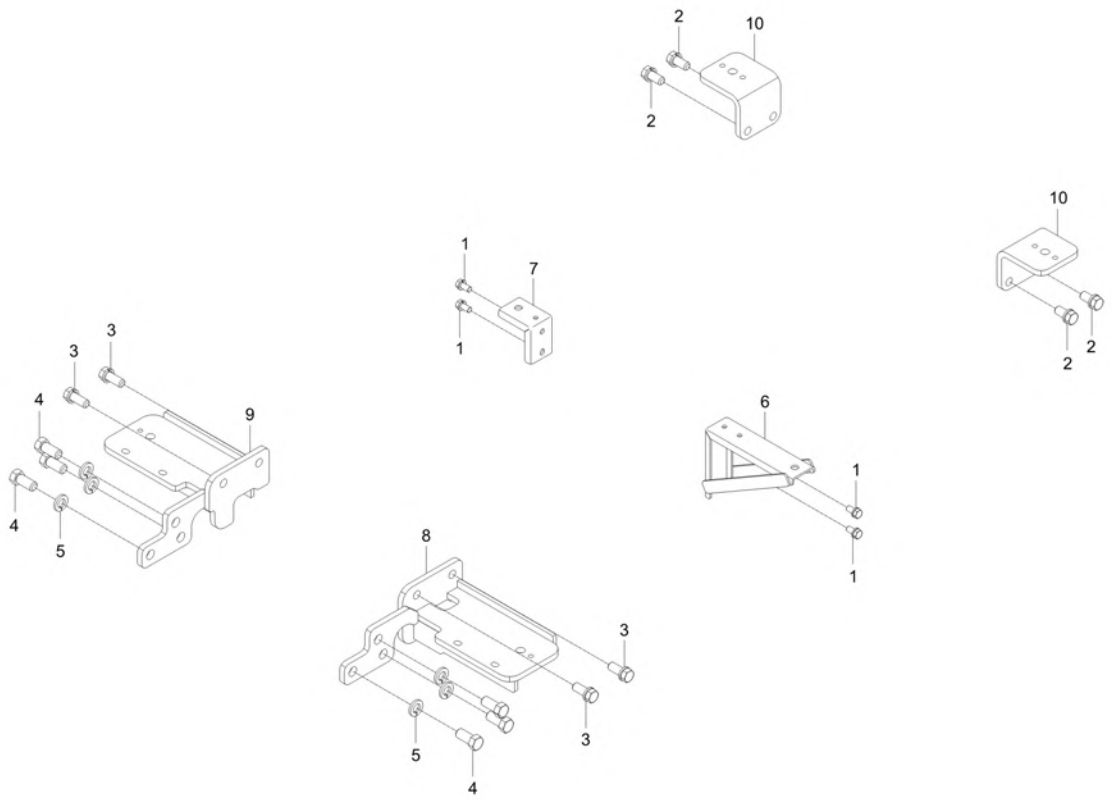

A : DK4510

No.	Part Number	Description	Qty A	Qty B	Qty C	Qty D	Qty E	I.C	Remark
1	01123-50816	Hex Head Cap Screw	4						M8XP1.25
2	01133-51225	BOLT, WASHER v	4						M12*P1.25
3	01133-51230	WASHER BOLT	4						M12*P1.25
4	01173-51430	BOLT	6						M14P1.5*30
5	04512-50140	SPRING WASHER	6						
6	T5710-51831	STEP SUPPORT BRACKET,LH dnr v	1						N
6	T5710-51832	STEP SUPPORT BRACKET, LH v	1 UR7600001 ~ WR7600104					<------	-
7	T5710-51841	STEP SUPPORT BRACKET, RH	1						T3.0
8	T5710-51912	SUPPORT, STEP v	1 ~ SR7600184						N
8	T5710-51913	STPE SUPPORT, LH	1 SR7600185 ~ WR7600094					<------	-
9	T5710-51922	SUPPORT, STEP v	1 ~ SR7600140						-
9	T5710-51923	STEP SUPPORT, RH	1 SR7600141 ~ WR7600094					<------	-
10	T5710-52042	SEAT FLOOR SUPPORT	2						T9.0

----> Old replace New
<---> Interchangeable
* Please place an order assy(*)
<---- New replace Old
<-O-> Interchangeable with another part(s)
<-X-> Not interchangeable

https://tractormanualz.com/

TD2-G624001

VIBRATIONPROOF RUBBER GROUP

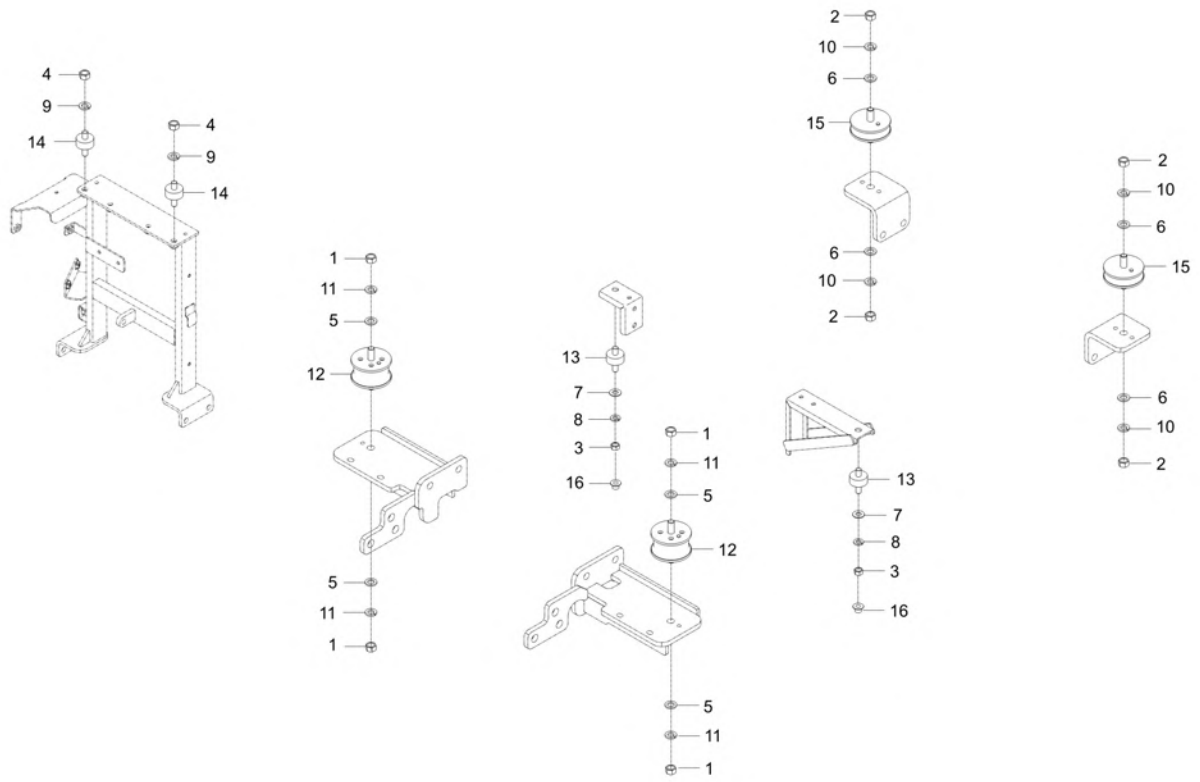

A : DK4510

No.	Part Number	Description	Qty A	Qty B	Qty C	Qty D	Qty E	I.C	Remark
1	02076-50120	NUT	4						
2	02076-50120	NUT	4						
3	02176-50100	NUT v	2						M10XP1.25
4	02176-50100	NUT v	2						M10XP1.25
5	04011-50120	WASHER, PLAIN	4						M12
6	04011-50120	WASHER, PLAIN	4						M12
7	04013-50100	PLAIN WASHER	2						M10
8	04512-50100	SPRING WASHER	2						M10
9	04512-50100	SPRING WASHER	2						M10
10	04512-50120	SPRING WASHER	4						M12
11	04512-50120	SPRING WASHER	4						M12
12	T5410-70211	DUSTPROOF RUBBER	2						
13	T5520-80391	DUSTPROOF RUBBER	2						
14	T5520-80391	DUSTPROOF RUBBER	2						
15	T5710-52051	DUSTPROOF RUBBER	2						N
15	T5710-52052	DUSTPROOF RUBBER v	2 VR7600001 ~ WR7600192					<----->	-
16	32210-2758-1	PLUG	2						M12

----> Old replace New
<---- New replace Old
<-X-> Not interchangeable
<---> Interchangeable
<-O-> Interchangeable with another part(s)
* Please place an order assy(*)

https://tractormanualz.com/

TD2-G637003

LEVER GUIDE(ROPS) GROUP

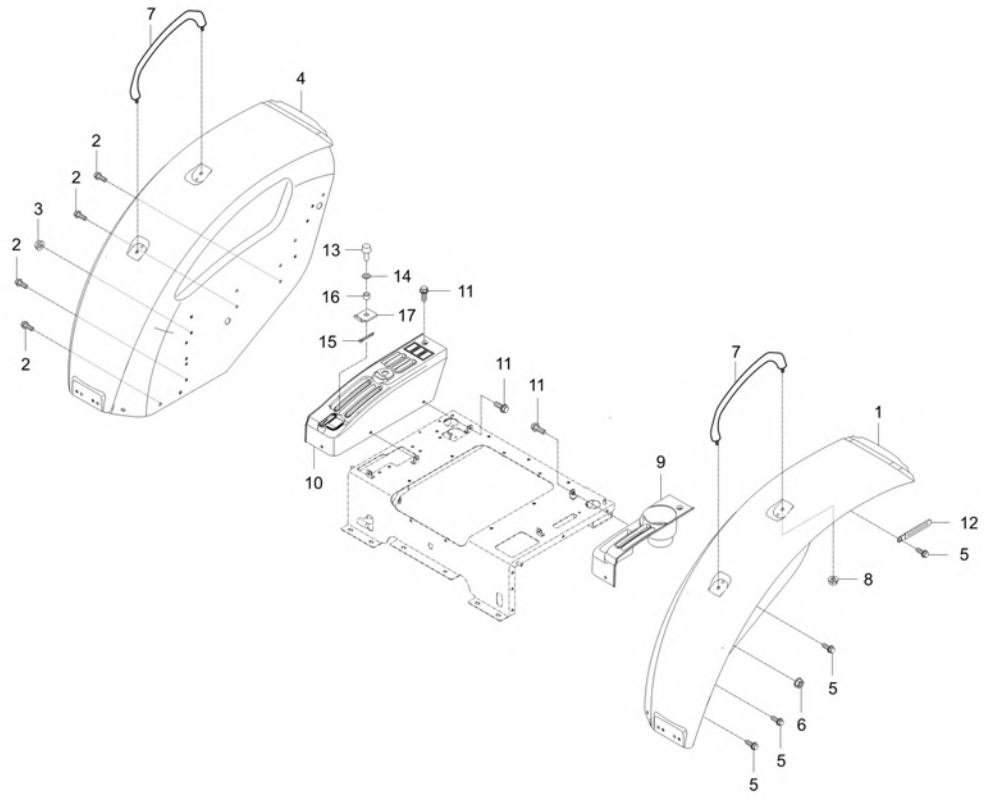

A : DK4510

No.	Part Number	Description	Qty A	Qty B	Qty C	Qty D	Qty E	I.C	Remark
1	T5710-52614	FENDER ASSY LH dnr v	1 PR7600001 ~ UR7600100						N
1	T5710-52615	TRK FENDER ASSY, LH v	1 UR7600101 ~ VR7600306					<------	-
1	T5710-52615OE	FENDER ASSY LH	1					<------	-
2	01754-50816	BOLT, FLANGE	14						M8XP1.25
3	02751-50080	FLANGE NUT 8MMX1.25P	1						M8XP1.25
4	T5710-52624	FENDER ASSY RH	1 PR7600001 ~ VR7600306						-
4	T5710-52624OE	FENDER ASSY, RH	1					<------	-
5	01754-50816	BOLT, FLANGE	14						M8XP1.25
6	02751-50080	FLANGE NUT 8MMX1.25P	1						M8XP1.25
7	T2630-95052	GRIP	2						
8	02763-50080	FLANGE NUT	4						M8XP1.25
9	T5710-52651	LEVER GUIDE, LH	1						
9	T5710-52652	LEVER GUIDE, LH	1 PR7600259 ~ RR7600068					<----->	T3.0
9	T5710-52653	LEVERGUIDE,LH	1 VR7600307 ~					<--X-->	T3.0
10	T5710-52662	LEVER GUIDE, RH	1						N
10	T5710-52663	LEVER GUIDE, RH	1 RR7600001 ~ RR7600068					<--O-->	N
10	T5710-52664	LEVER GUIDE, RH v	1 VR7600307 ~					<--X-->	-
11	T4625-55431	FLANGE BOLT	7						

----> Old replace New <---- New replace Old <-X-> Not interchangeable
<---> Interchangeable <-O-> Interchangeable with another part(s)
* Please place an order assy(*)

https://tractormanualz.com/

TD2-G637003

LEVER GUIDE(ROPS) GROUP

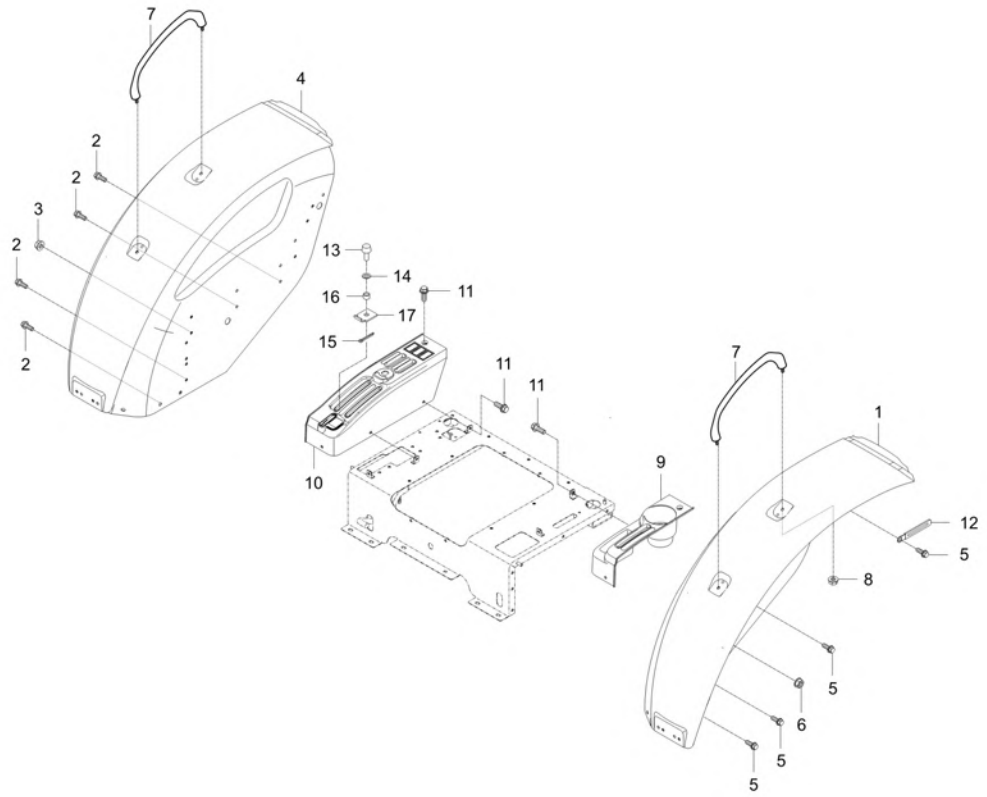

A : DK4510

No.	Part Number	Description	Qty A	Qty B	Qty C	Qty D	Qty E	I.C	Remark
12	37150-3447-1	WIR'G CLAMP	2						T0.5
13	55571-3238-1	BOLT v	1						
14	04015-50060	WASHER, PLAIN	1						M6
15	05511-50215	PIN,SPLIT	1						DIA1.8XL15
16	T4520-83301	SPACER	1						DIA10.5*T2.0
17	T2350-95472	STOPPER v	1						

----> Old replace New
<----> Interchangeable
* Please place an order assy(*)
<---- New replace Old
<-O-> Interchangeable with another part(s)
<-X-> Not interchangeable

https://tractormanualz.com/

TD2-G640101

MAIN SHIFT LEVER GROUP

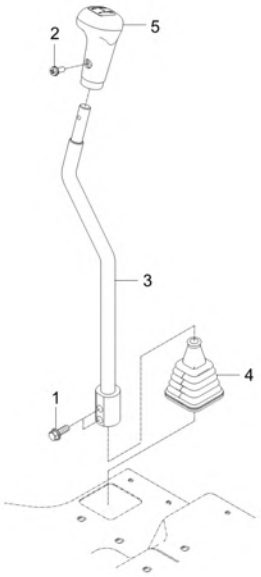

A : DK4510

No.	Part Number	Description	Qty A	Qty B	Qty C	Qty D	Qty E	I.C	Remark
1	01123-50830	BOLT, WASHER v	2						M8P1.25*30
2	03016-50616	SCREW	1						M6XP1.0
3	T5710-53014	LEVER, MAIN SHIFT v	1 PR7600001 ~ TR7600028						N
3	T5710-53015	LEVER, MAIN SPEED CHANGE	1 TR7600029 ~ WR7600104					<------	-
4	T5710-53051	BOOT	1						T1.2
5	T5750-53031	GRIP, MAIN-CHANGE	1						N
5	T5750-53032	GRIP, MAIN-CHANGE	1					<----->	N

----> Old replace New
<---> Interchangeable
* Please place an order assy(*)
<---- New replace Old
<-O-> Interchangeable with another part(s)
<-X-> Not interchangeable

https://tractormanualz.com/

TD2-G640502

RANGE SHIFT LEVER GROUP

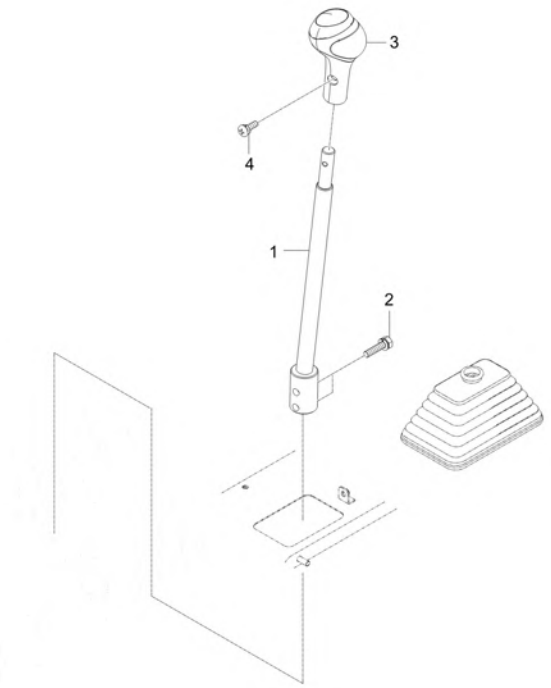

A : DK4510

No.	Part Number	Description	Qty A	Qty B	Qty C	Qty D	Qty E	I.C	Remark
1	T5710-53213	LEVER, RANGE	1						N
1	T5715-53212	LEVER, RANGE v	1 PR7600001 ~ WR7600104					<------	N
2	01123-50830	BOLT, WASHER v	2						M8P1.25*30
3	T5755-53231	GRIP, SUB-CHANGE dnr v	1 PR7600001 ~ RR7600068						N
3	T5755-53232	GRIP, SUB CHANGE	1 SR7600001 ~ WR7600104					<----->	N
4	03016-50616	SCREW	1						M6XP1.0

----> Old replace New
<---> Interchangeable
* Please place an order assy(*)
<---- New replace Old
<-O-> Interchangeable with another part(s)
<-X-> Not interchangeable

https://tractormanualz.com/

TD2-G641002

RANGE SHIFT LEVER GROUP

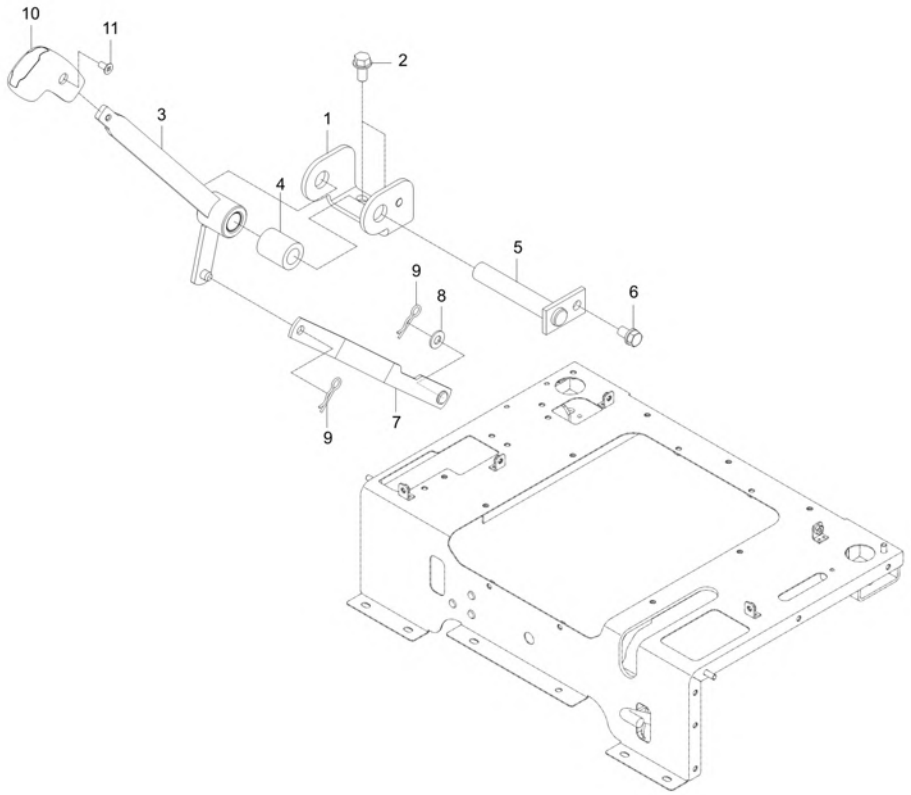

A : DK4510

No.	Part Number	Description	Qty A	Qty B	Qty C	Qty D	Qty E	I.C	Remark
1	T5710-53412	BRACKET	1						T4.5
2	01754-50816	BOLT, FLANGE	2						M8XP1.25
3	T5710-53434	LEVER, ADJUSTING v	1						N
4	T5715-53471	BUSHING	1						OD28,ID16.5
5	T4835-66532	SHAFT	1						
6	01123-50814	BOLT, WASHER	1						M8*P1.25
7	T5715-53571	ROD	1						N
8	04012-50080	WASHER, PLAIN	1						M8
9	05515-50800	PIN, SNAP	2						M8
10	T5710-53471	GRIP	1						
11	03056-50510	SCREW	1						M5XP0.8

----> Old replace New <---- New replace Old <-X-> Not interchangeable
<---> Interchangeable <-O-> Interchangeable with another part(s)
* Please place an order assy(*)

https://tractormanualz.com/

TD2-G644002

SHUTTLE LEVER GROUP

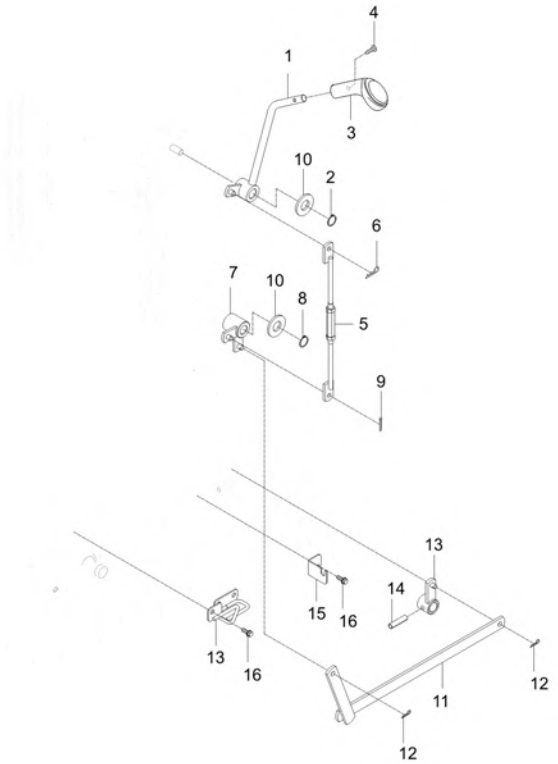

A : DK4510

No.	Part Number	Description	Qty A	Qty B	Qty C	Qty D	Qty E	I.C	Remark
1	T5715-80211	LEVER, SHUTTLE v	1						N
2	04612-00160	SNAP RING v	1						
3	T5750-80251	GRIP	1						-
4	03024-50514	BOLT,SCREW	1						
5	T5710-80221	ROD 1,SHUTTLE	1						N
6	05525-50800	PIN, SNAP	1						DIA8
7	T5710-80232	LEVER	1						N
8	04612-00160	SNAP RING v	1						
9	05511-50218	PIN, SPLIT	1						DIA2*18
10	04013-50160	WASHER, PLAIN	2						M16
11	T5715-51733	ROD 2,SHUTTLE	1						N
12	05511-50218	PIN, SPLIT	2						DIA2*18
13	T5710-59001	ARM, CONNETING	1						N
14	05411-00635	PIN, SPRING	1						DIA5*36
15	T5710-51742	HOSE GUIDE, LH	1						N
16	01123-50816	Hex Head Cap Screw	3						M8XP1.25

----> Old replace New
<---- New replace Old
<-X-> Not interchangeable
<---> Interchangeable
<-O-> Interchangeable with another part(s)
* Please place an order assy(*)

https://tractormanualz.com/

TD2-G644501 FRONT WHEEL DRIVE LEVER GROUP

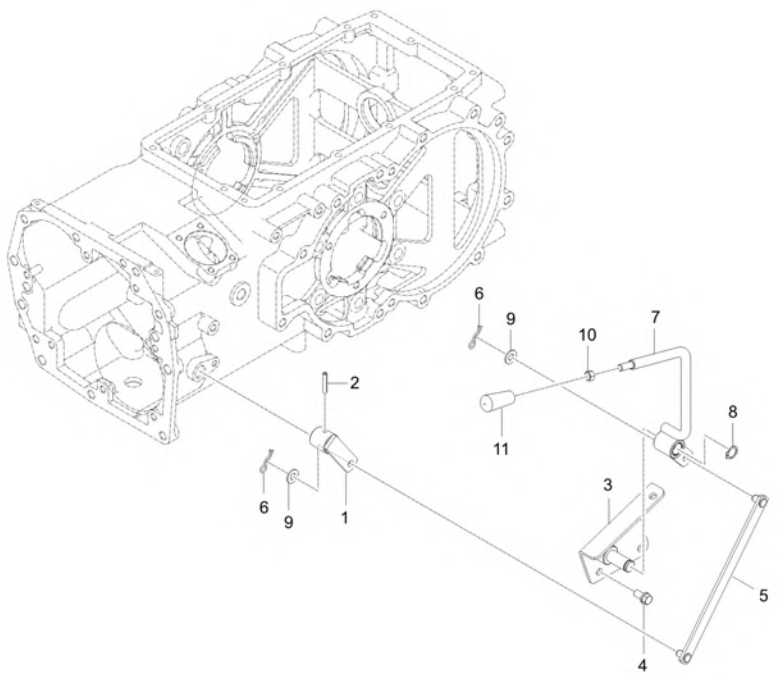

A : DK4510

No.	Part Number	Description	Qty A	Qty B	Qty C	Qty D	Qty E	I.C	Remark
1	T2185-44764	LINK1,FRONT DRIVE	1						
2	05411-00635	PIN, SPRING	1						DIA5*36
3	T5755-59061	BRACKET	1						N
4	01123-51020	BOLT	2						M10*P1.5
5	T5755-59072	ROD	1						N
6	05515-51000	Split Pin	2						DIA10
7	T5755-59041	LEVER, FRONT WHEEL	1						N
8	04612-00180	SNAP RING	1						
9	04011-50100	PLAIN WASHER	2						M10
10	02176-50100	NUT v	1						M10XP1.25
11	T5715-53611	GRIP	1						N

----> Old replace New <---- New replace Old <-X-> Not interchangeable
<---> Interchangeable <-O-> Interchangeable with another part(s)
* Please place an order assy(*)

https://tractormanualz.com/

TD2-G645201

HAND PARKING BRAKE GROUP

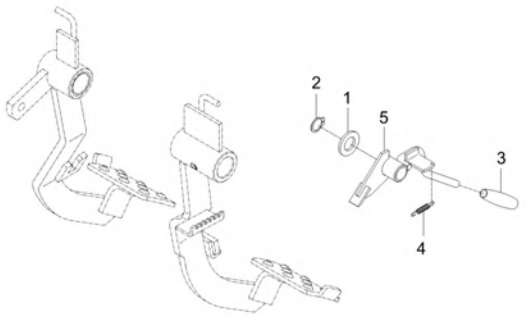

A : DK4510

No.	Part Number	Description	Qty A	Qty B	Qty C	Qty D	Qty E	I.C	Remark
1	04011-50160	PLAIN WASHER	1						M16
2	04612-50160	RING,SNAP	1						
3	T2350-55922	GRIP	1						
4	T4157-51211	SPRING, RETURN	1						
5	T4620-55912	BRAKE PARKING v	1						-

----> Old replace New
<---- New replace Old
<-X-> Not interchangeable
<---> Interchangeable
<-O-> Interchangeable with another part(s)
* Please place an order assy(*)

https://tractormanualz.com/

TD2-G645501

DIFFERENTIAL PEDAL GROUP

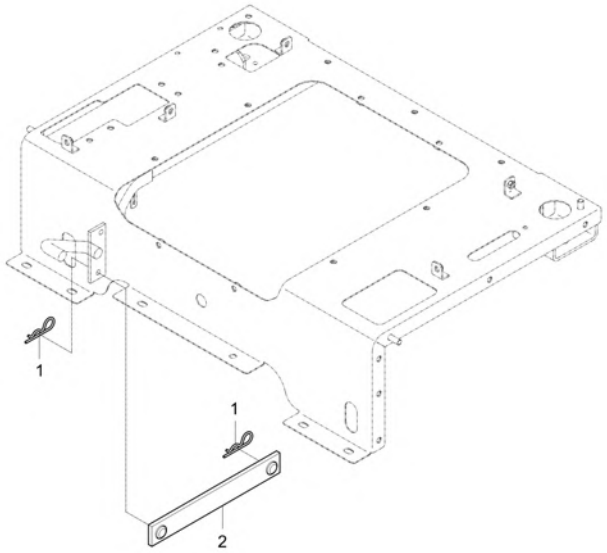

A : DK4510

No.	Part Number	Description	Qty A	Qty B	Qty C	Qty D	Qty E	I.C	Remark
1	05515-50800	PIN, SNAP	2						M8
2	T5710-52811	ROD, DIFF.SET	1						N

----> Old replace New
<----> Interchangeable
* Please place an order assy(*)
<---- New replace Old
<-O-> Interchangeable with another part(s)
<-X-> Not interchangeable

https://tractormanualz.com/

TD2-G646001

CLUTCH PEDAL GROUP

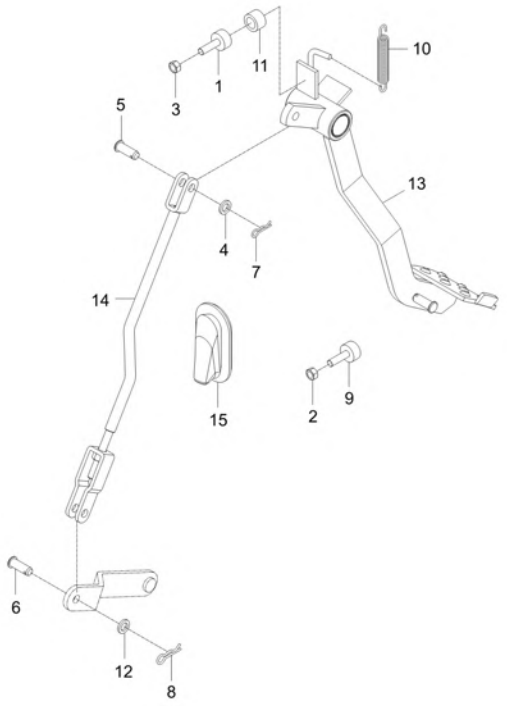

A : DK4510

No.	Part Number	Description	Qty A	Qty B	Qty C	Qty D	Qty E	I.C	Remark
1	01176-51030	BOLT	1						
2	02156-50080	NUT v	1						M8XP1.25
3	02176-50100	NUT v	1						M10XP1.25
4	04013-50100	PLAIN WASHER	1						M10
5	05122-51028	PIN, JOINT v	1						DIA10
6	05122-51028	PIN, JOINT v	1						DIA10
7	52300-3413-1	PIN, SNAP	1						DIA1.8
8	52300-3413-1	PIN, SNAP	1						DIA1.8
9	T2350-55881	BOLT ADJUSTING	1						
10	T2350-55961	SPRING BRAKE	1						DIA2.3
11	T4620-55841	CUSHION	1						
12	T4930-66731	WASHER 1	1						
13	T5710-80013	PEDAL, CLUTCH	1						N
14	T5710-80031	ROD,CLUTCH	1						N
15	T5710-80041	BOOT	1						N

----> Old replace New
<----> Interchangeable
* Please place an order assy(*)
<---- New replace Old
<-O-> Interchangeable with another part(s)
<-X-> Not interchangeable

https://tractormanualz.com/

TD2-G646501

BRAKE PEDAL GROUP

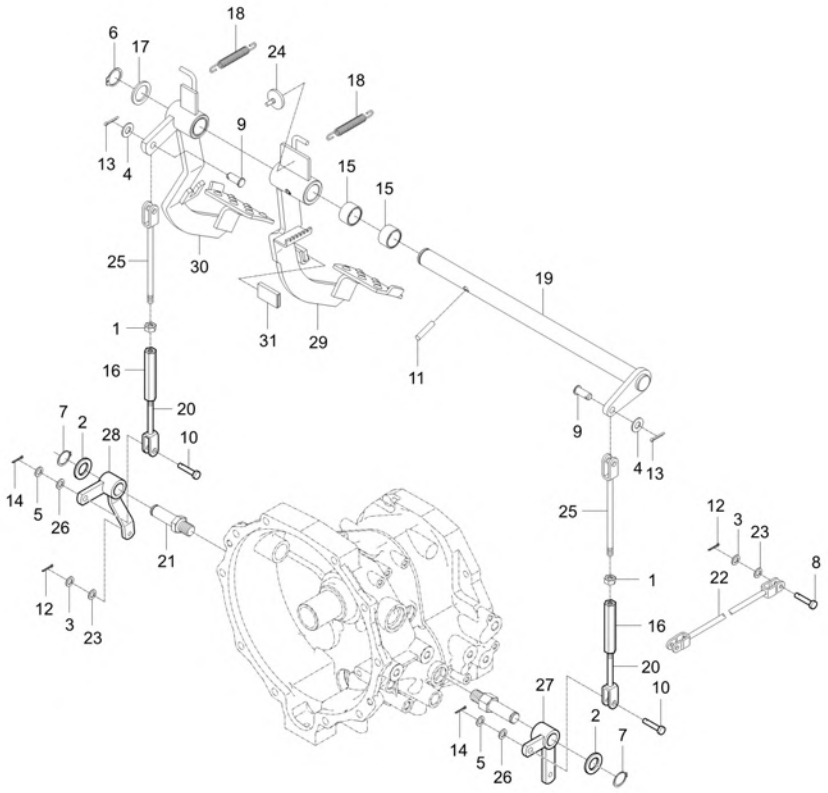

A : DK4510

No.	Part Number	Description	Qty A	Qty B	Qty C	Qty D	Qty E	I.C	Remark
1	02176-50100	NUT v	2						M10XP1.25
2	04011-50200	WASHER, PLAIN	2						M20
3	04012-50080	WASHER, PLAIN	4						M8
4	04013-50100	PLAIN WASHER	2						M10
5	04013-50100	PLAIN WASHER	2						M10
6	04612-00250	CIR-CLIP	1						DIA25
7	04612-50200	RING,SNAP	2						
8	05122-50828	PIN,JOINT	4						DIA8XL28
9	05122-51025	JOINT PIN	2						DIA10*25
10	05122-51028	PIN, JOINT v	2						DIA10XL28
11	05411-00840	PIN, SPRING	1						DIA8.6XL40
12	05511-50218	PIN, SPLIT	4						DIA1.8XL18
13	05511-50318	PIN, SPLIT v	2						DIA2.7XL18
14	05511-50318	PIN, SPLIT v	2						DIA2.7XL18
15	08822-53017	NEEDLE BEARING	2						내경DIA25
16	32350-2898-4	TURNBUCKLE dnr v	2						HEX14
17	84612-1445-0	COLLAR	1						DIA36*8
18	T2350-55961	SPRING BRAKE	2						DIA2.3

----> Old replace New <---- New replace Old <-X-> Not interchangeable
<---> Interchangeable <-O-> Interchangeable with another part(s)
* Please place an order assy(*)

https://tractormanualz.com/

TD2-G646501

BRAKE PEDAL GROUP

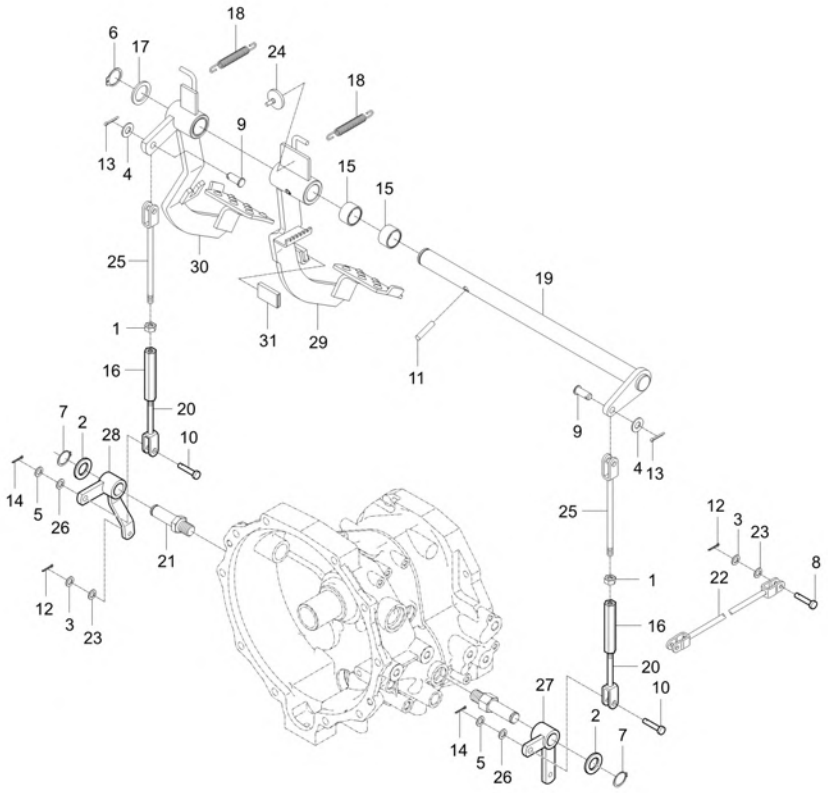

A : DK4510

No.	Part Number	Description	Qty A	Qty B	Qty C	Qty D	Qty E	I.C	Remark
19	T2610-55731	SHAFT, PEDAL	1						-
20	T2610-55751	ROD 1,BRAKE	2						
21	T2610-55802	SHAFT, BRAKE(LH)	2						
22	T2660-55771	ROD 3, BRAKE	2						
23	T4145-55791	CUSHION	4						
24	T4520-26931	CUSHION	1						
25	T4620-55762	ROD2,BRAKE	2						
26	T4682-65311	WASHER 3	2						
27	T5710-51611	LEVER, BRAKE LH	1						N
28	T5710-51621	LEVER, BRAKE RH	1						N
29	T5710-80413	PEDAL, BRAKE	1						N
30	T5710-80422	PEDAL, BRAKE	1						N
31	T5815-55291	VINYL TUBE	1						OD17XT2.0
32	02156-50080	NUT v	1						M8XP1.25
33	T2350-55881	BOLT ADJUSTING	1						

----> Old replace New
<---- New replace Old
<-X-> Not interchangeable
<---> Interchangeable
<-O-> Interchangeable with another part(s)
* Please place an order assy(*)

https://tractormanualz.com/

TD2-G648102

ACCELERATOR LEVER GROUP

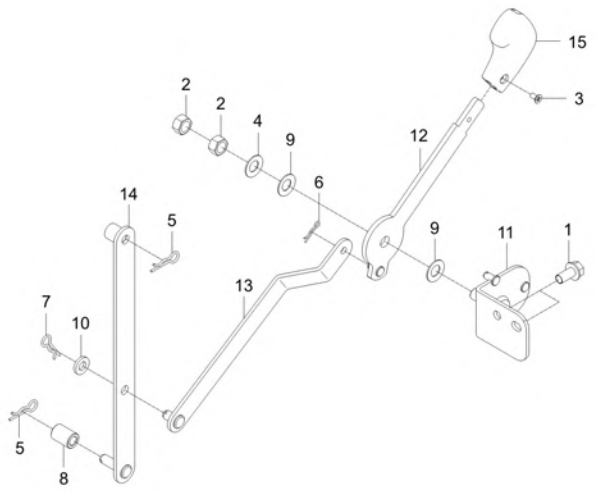

A : DK4510

No.	Part Number	Description	Qty A	Qty B	Qty C	Qty D	Qty E	I.C	Remark
1	01754-50816	BOLT, FLANGE	2						M8XP1.25
2	02176-50100	NUT v	2						M10XP1.25
3	03056-50408	BOLT	1						M4XP0.7
4	04013-50100	PLAIN WASHER	1						M10
5	05515-50800	PIN, SNAP	2						M8
6	05525-50600	SNAP PIN	1						DIA6
7	05525-50800	PIN, SNAP	1						DIA8
8	T2360-34142	USE T2360-34141	1						DIA14
9	T4668-83301	SPRING	2						
10	T4930-66741	WASHER 2	1						
11	T5710-81012	BRACKET, ACCEL	1						-
12	T5710-81031	LEVER, HAND ACCEL	1						N
13	T5710-81051	ACCEL ROD, 1	1						N
14	T5710-81071	ACCEL ROD, 2	1						N
15	T5750-81091	GRIP, HAND ACCEL	1						-

----> Old replace New <---- New replace Old <-X-> Not interchangeable
<---> Interchangeable <-O-> Interchangeable with another part(s)
* Please place an order assy(*)

https://tractormanualz.com/

TD2-G648201

ACCELERATOR PEDAL GROUP

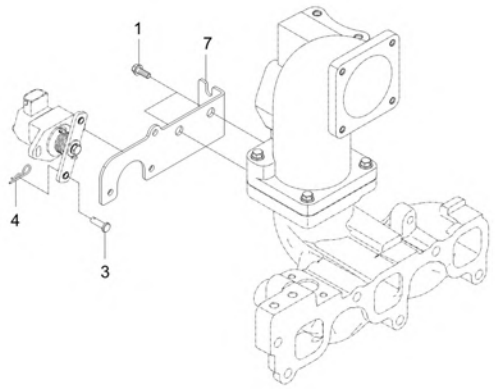

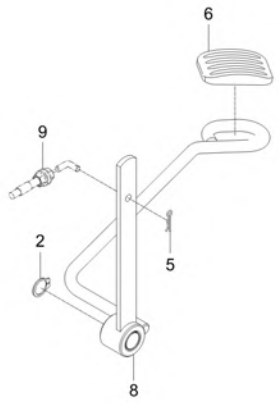

A : DK4510

No.	Part Number	Description	Qty A	Qty B	Qty C	Qty D	Qty E	I.C	Remark
1	01774-51016	BOLT,FLANGE	2						
2	04612-00150	CIR CLIP, EXTERNAL	1						DIA15
3	05122-50616	PIN, JOINT	1						DIA6XL16
4	05525-50600	SNAP PIN	1						DIA6
5	05525-50600	SNAP PIN	1						DIA6
6	T4620-70272	RUBBER, ACCEL PEDAL	1						
7	T5710-51771	SENSOR, BRACKET	1						N
8	T5710-81041	PEDAL, ACCEL	1						-
9	T5710-81081	CABLE,ACCELERATOR	1						

----> Old replace New
<---- New replace Old
<-X-> Not interchangeable
<---> Interchangeable
<-O-> Interchangeable with another part(s)
* Please place an order assy(*)

https://tractormanualz.com/

TD2-G648501 EXTERNAL POSITION ADJUSTING LEVER GROUP

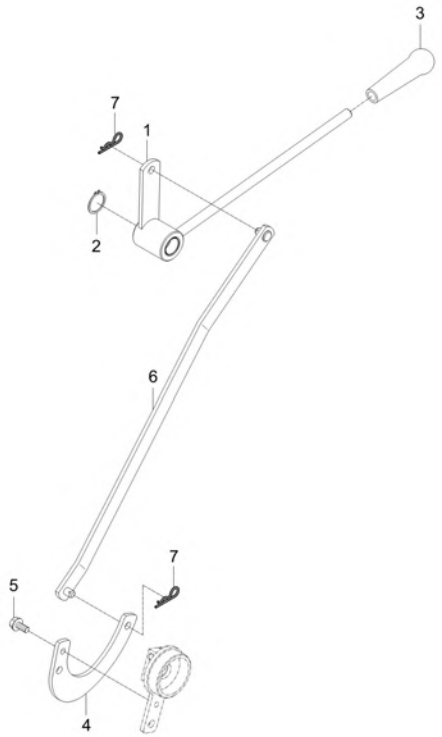

A : DK4510

No.	Part Number	Description	Qty A	Qty B	Qty C	Qty D	Qty E	I.C	Remark
1	T5715-53511	LEVER,ADJUSTING	1						N
2	04612-00180	SNAP RING	1						
3	T4818-71221	GRIP	1						
4	T5715-53531	BRACKET	1						T4.5
5	01023-50612	BOLT, WASHER v	1						M6*P1.0
6	T5715-53551	ROD	1						N
7	05515-50800	PIN, SNAP	2						M8

----> Old replace New
<---- New replace Old
<-X-> Not interchangeable
<---> Interchangeable
<-O-> Interchangeable with another part(s)
* Please place an order assy(*)

https://tractormanualz.com/

TD2-G652001 INSTRUMENT PANEL FRAME GROUP

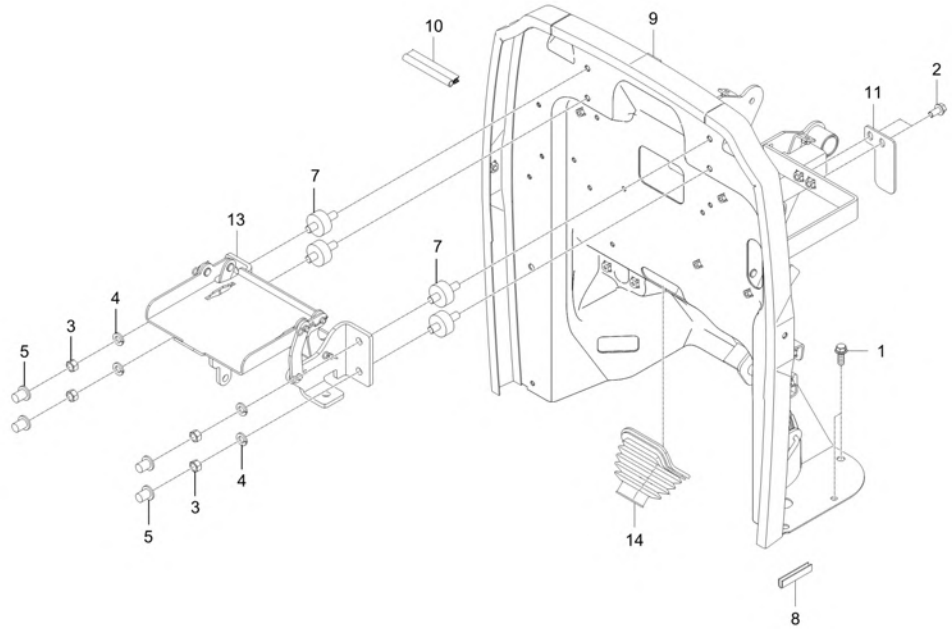

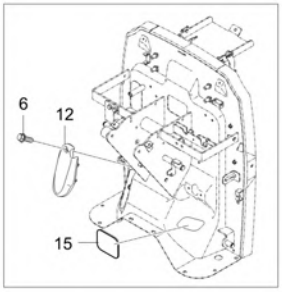

A : DK4510

No.	Part Number	Description	Qty A	Qty B	Qty C	Qty D	Qty E	I.C	Remark
1	01754-50816	BOLT, FLANGE	8						M8XP1.25
2	01754-50816	BOLT, FLANGE	2						M8XP1.25
3	02176-50100	NUT v	4						M10XP1.25
4	04512-50100	SPRING WASHER	4						M10
5	32210-2758-1	PLUG	4						M12
6	T4625-55431	FLANGE BOLT	1						
7	T5520-80391	DUSTPROOF RUBBER	4						
8	T5620-50291	U-SHAPED RUBBER	1						
9	T5710-80602	FRAME ASSY v	1						N
9	T5710-80603	FRAME ASSY dnr v	1					<----->	N
9	T5710-80604	FRAME ASSY	1					<----->	-
9	T5710-80605	FRAME ASSY obs v	1					<------	-
9	T5710-80606	FRAME ASSY	1					<----->	-
9	T5710-80607	FRAME ASSY	1					<--O-->	-
9	T5710-80608	FRAME ASSY	1					<----->	-
10	T5710-80651	RUBBER	1						N
11	T5710-80782	PLATE, SWITCH	1						T3.0
12	T5710-80791	COVER, INSPECTION	1						N

----> Old replace New
<---- New replace Old
<-X-> Not interchangeable
<---> Interchangeable
<-O-> Interchangeable with another part(s)
* Please place an order assy(*)

https://tractormanualz.com/

TD2-G652001

INSTRUMENT PANEL FRAME GROUP

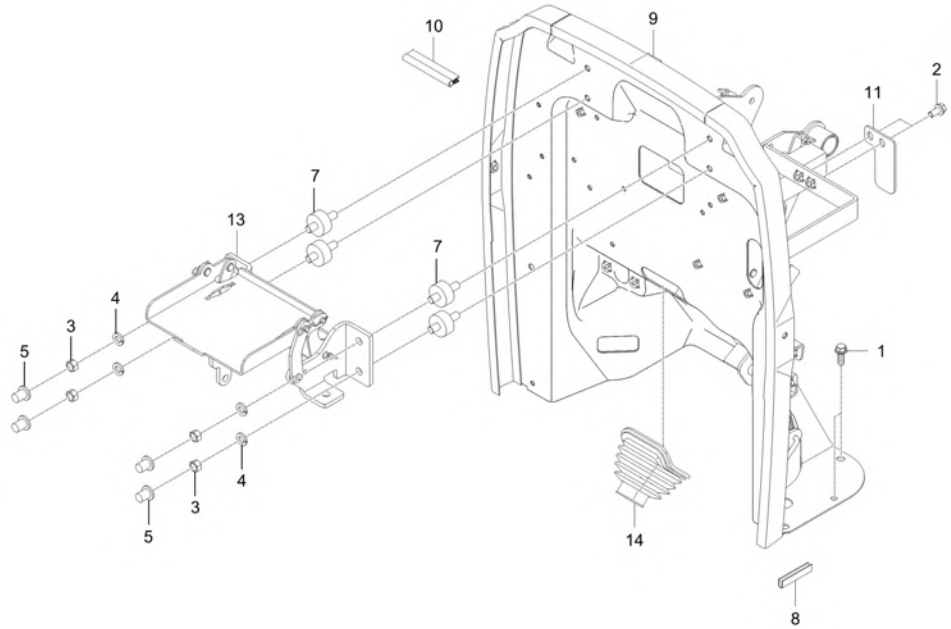

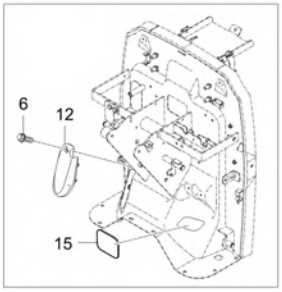

A : DK4510

No.	Part Number	Description	Qty A	Qty B	Qty C	Qty D	Qty E	I.C	Remark
13	T5715-80603	ASS'Y,HILGEBRACKET	1						N
14	T5715-80681	BOOT	1						T1.2
15	TD26-1021A	Packing, cover	1						

----> Old replace New
<---- New replace Old
<-X-> Not interchangeable
<---> Interchangeable
<-O-> Interchangeable with another part(s)
* Please place an order assy(*)

https://tractormanualz.com/

TD2-G653002 INSTRUMENT PANEL FRAME GROUP

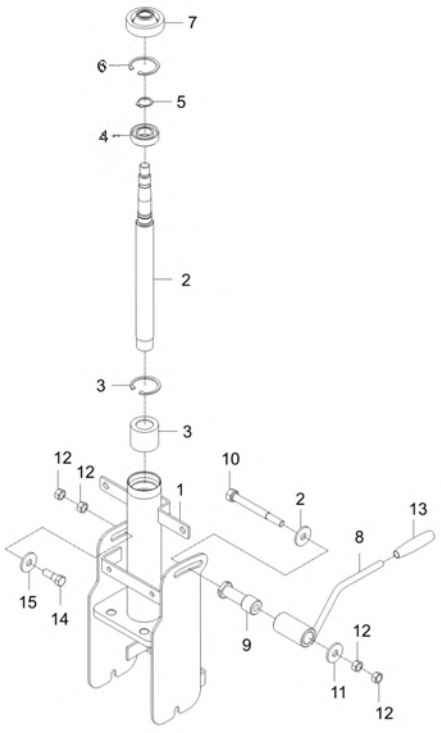

A : DK4510

No.	Part Number	Description	Qty A	Qty B	Qty C	Qty D	Qty E	I.C	Remark
1	T5715-80814	ASSY COLUMN	1						N
1	T5715-80815	COLUMN ASSY	1					<--O-->	-
2	T2350-66101	SHAFT,STEERING	1						
3	T4260-50100	RUBBER CUSHION	1						L3503, D4351
4	08111-06003	BEARING, BALL dnr v	1						
5	04612-00170	CIR-CLIP	1						
6	04611-00350	CIR CLIP, INTERNAL v	2						SK5M
7	T2440-16351	SEAL,OIL	1						
8	T5710-80841	LEVER, TILT	1						N
9	T5710-80852	BOLT, HOLDER	1						N
10	T5710-80871	BOLT	1						M8XP1.25
11	04015-50080	PLAIN WASHER	1						T2.6
12	02156-50080	NUT v	4						M8XP1.25
13	T2185-71241	GRIP, DARK BLUE	1						
14	T5710-80861	BOLT	1						M8XP1.25
15	T5715-80691	WASHER	1						T2.0

----> Old replace New <---- New replace Old <-X-> Not interchangeable
<---> Interchangeable <-O-> Interchangeable with another part(s)
* Please place an order assy(*)

https://tractormanualz.com/

TD2-G654001

STEERING COLUMN COVER GROUP

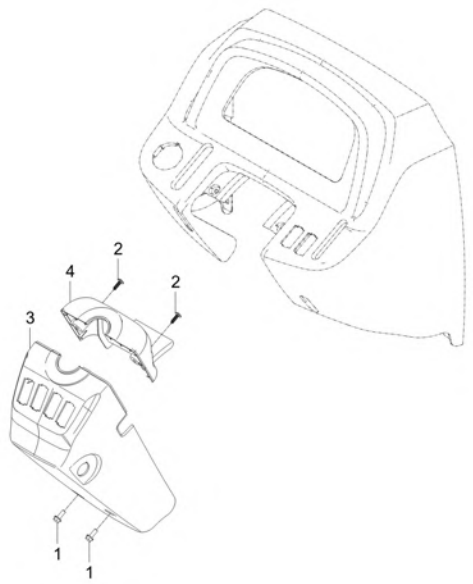

A : DK4510

No.	Part Number	Description	Qty A	Qty B	Qty C	Qty D	Qty E	I.C	Remark
1	01754-50616	BOLT, FLANGE v	2						M6*P1.0
2	T4930-64301	SCREW	2						
3	T5710-81221	COVER	1						
3	T5710-81222	COVER dnr v	1					<--X-->	
3	T5710-81223	COVER v	1 VR7600203 ~ WR7600192					<------	
4	T5710-81231	COVER	1						
4	T5710-81232	COVER	1 VR7600203 ~ WR7600192					<--X-->	

----> Old replace New
<---> Interchangeable
* Please place an order assy(*)
<---- New replace Old
<-O-> Interchangeable with another part(s)
<-X-> Not interchangeable

https://tractormanualz.com/

TD2-G655001

INSTRUMENT COVER GROUP

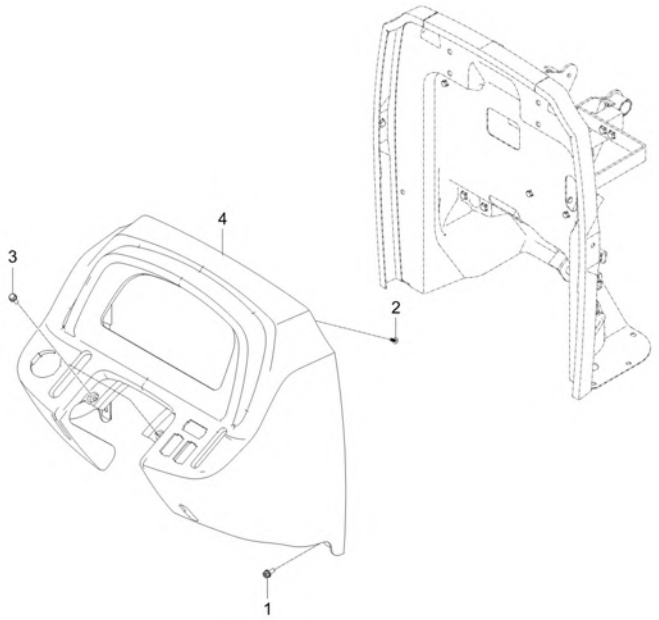

A : DK4510

No.	Part Number	Description	Qty A	Qty B	Qty C	Qty D	Qty E	I.C	Remark
1	01205-50616	BOLT	2						M6*P1.0
2	38430-1827-1	SCREW	2						-
3	T4625-55431	FLANGE BOLT	2						
4	T5710-81212	COVER, INSTRUMENT dnr v	1						N
4	T5710-81213	INSTRUMENT COVER, UP v	1 VR7600203 ~ WR7600180					<--X-->	-
4	T5710-81214	INSTRUMENT COVER, UP	1 WR7600181 ~ WR7600192					<--O-->	-

----> Old replace New
<---> Interchangeable
* Please place an order assy(*)
<---- New replace Old
<-O-> Interchangeable with another part(s)
<-X-> Not interchangeable

https://tractormanualz.com/

TD2-G663001

AUXLIARY STEP GROUP

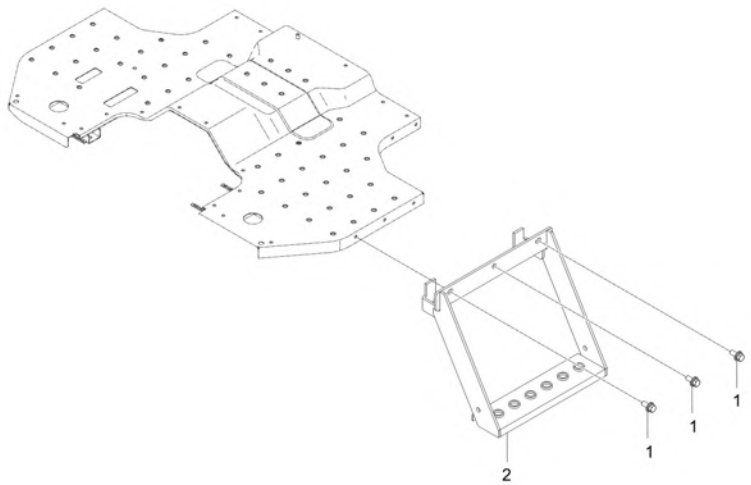

A : DK4510

No.	Part Number	Description	Qty A	Qty B	Qty C	Qty D	Qty E	I.C	Remark
1	01125-50820	BOLT, WASHER	3						M8XP1.25
2	T5710-51932	STEP dnr v	1 PR7600001 ~ SR7600137						N
2	T5710-51933	STEP (SUB) v	1 SR7600138 ~ WR7600192					<--X-->	-

----> Old replace New
<---> Interchangeable
* Please place an order assy(*)
<---- New replace Old
<-O-> Interchangeable with another part(s)
<-X-> Not interchangeable

https://tractormanualz.com/

TD2-G671001

FUEL TANK GROUP

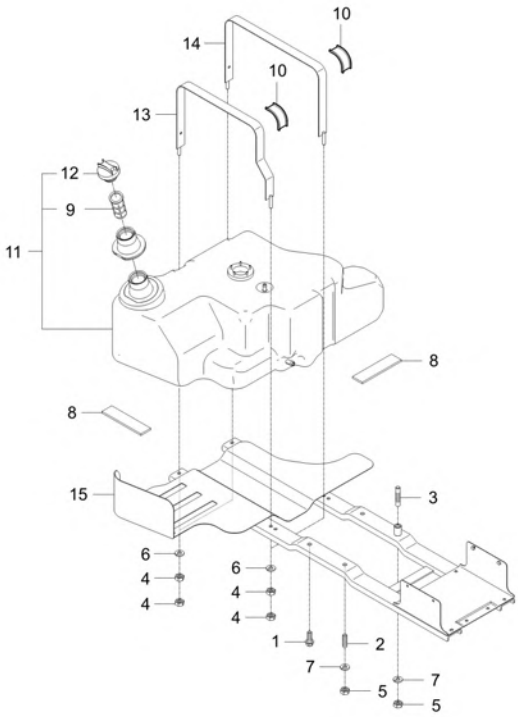

A : DK4510

No.	Part Number	Description	Qty A	Qty B	Qty C	Qty D	Qty E	I.C	Remark
1	01133-51225	BOLT, WASHER v	2						M12*P1.25
2	01574-51225	STUD	1						
3	01574-51250	STUD V	1						
4	02176-50100	NUT v	8						M10XP1.25
5	02176-50120	NUT	2						M12XP1.25
6	04512-50100	SPRING WASHER	4						M10
7	04512-50120	SPRING WASHER	2						M12
8	T2610-50271	RUBBER, CUSHION v	4						
9	T4686-41351	FILTER, FUEL	1						
10	T5270-55241	RUBBER	4						
11	T5710-51412	TANK ASSY, FUEL dnr v	1 PR7600001 ~ TR7600070						N
11	T5710-51413	FUEL TANK ASSY	1 TR7600071 ~ TR7600090					<--O-->	-
11	T5710-51414	FUEL TANK ASSY v	1 TR7600091 ~ WR7600104					<----->	-
12	T2611-54823	FUEL CAP ASSY dnr v	1						
12	T2611-54824	ASSY, FUEL CAP dnr v	1					<--O-->	
12	T2611-54825	ASSY, FUEL CAP v	1					<----->	
13	T5710-51422	PLATE, FUEL TANK HOLDER FRT	1						N
14	T5710-51432	PLATE, FUEL TANK HOLDER RR	1						N

----> Old replace New
<---- New replace Old
<-X-> Not interchangeable
<---> Interchangeable
<-O-> Interchangeable with another part(s)
* Please place an order assy(*)

https://tractormanualz.com/

TD2-G671001

FUEL TANK GROUP

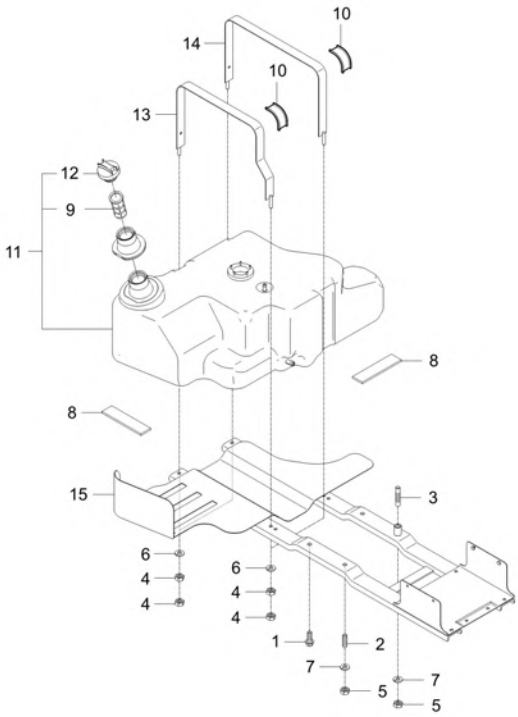

A : DK4510

No.	Part Number	Description	Qty A	Qty B	Qty C	Qty D	Qty E	I.C	Remark
15	T5710-51453	ASSY, FUEL TANK SUPPORT dnr v	1 PR7600001 ~ TR7600014						N
15	T5710-51454	FUEL TANK SUPPORT ASSY v	1					<------	-

----> Old replace New
<---> Interchangeable
* Please place an order assy(*)
<---- New replace Old
<-O-> Interchangeable with another part(s)
<-X-> Not interchangeable

https://tractormanualz.com/

TD2-G681003

LOWER LINK GROUP

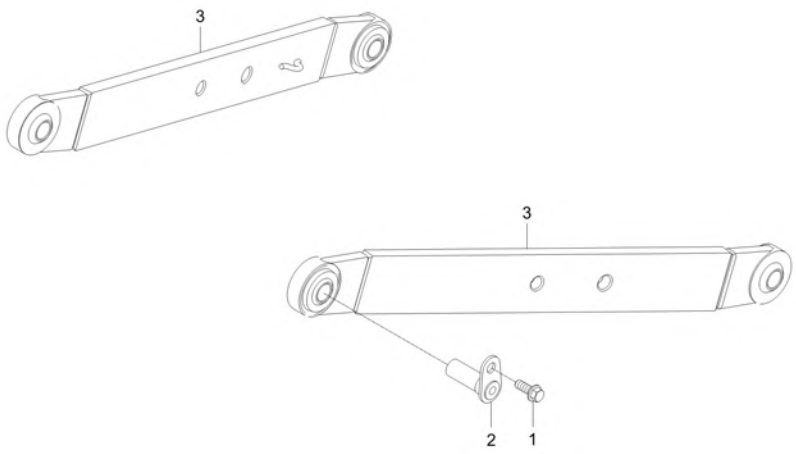

A : DK4510

No.	Part Number	Description	Qty A	Qty B	Qty C	Qty D	Qty E	I.C	Remark
1	01133-51025	BOLT	2						M10XP1.25
2	T4240-28533TP	PIN, LOWER LINK	2						
3	T5715-54632	ASSY LINK	2 ~ TR7600090						
3	TD26-0567A	ASSYLINK,LOWER-BALL(CAT.1)	2 TR7600091 ~ WR7600192					<----->	

----> Old replace New
<---- New replace Old
<-X-> Not interchangeable
<---> Interchangeable
<-O-> Interchangeable with another part(s)
* Please place an order assy(*)

https://tractormanualz.com/

TD2-G682002

CHECK LINK GROUP

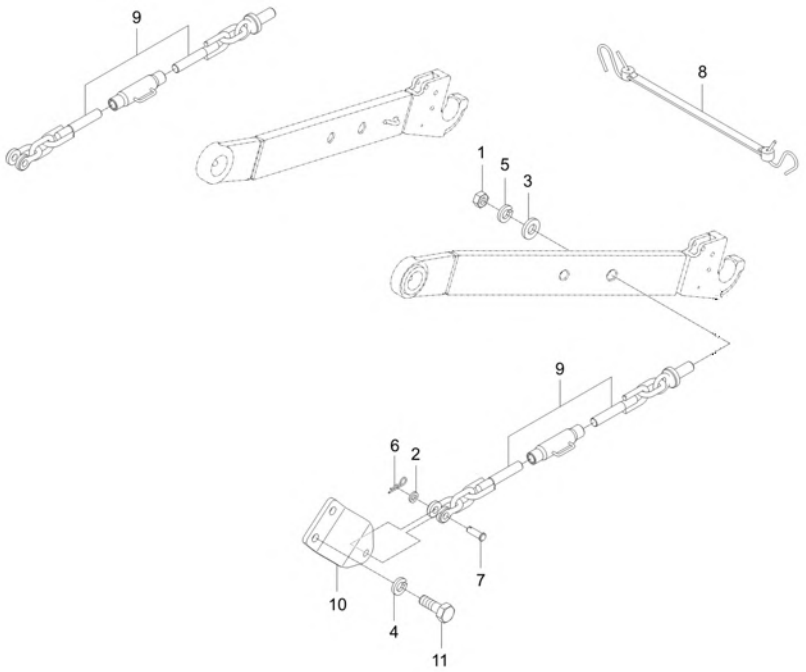

A : DK4510

No.	Part Number	Description	Qty A	Qty B	Qty C	Qty D	Qty E	I.C	Remark
1	02176-50180	NUT	2						
2	04013-50120	PLAIN WASHER	2						M12
3	04015-50160	WASHER	2						
4	04512-50140	SPRING WASHER	6						
5	04512-50180	WASHER, SPRING	2						M18
6	05515-51200	SPLIT PIN	2						DIA12
7	32353-7189-3TP	PIN, CHECK CHAIN	2						-
8	T2610-21321	ASSY,CHECK LINK(RUBBER)	1						
9	T4240-71802	ASSY, CHECK CHAIN dnr v	2 WR7600181 ~ UR7600100						
9	TC26-1298A	ASSY LINK,CHECK v	2 UR7600101 ~ WR7600104					<----->	
10	T5710-54662	CHECKCHAINHOLDER v	2						-
11	T5710-54711	BOLT	6						M14*2.0*32

----> Old replace New
<---- New replace Old
<-X-> Not interchangeable
<---> Interchangeable
<-O-> Interchangeable with another part(s)
* Please place an order assy(*)

https://tractormanualz.com/

TD2-G683001

TOP LINK GROUP

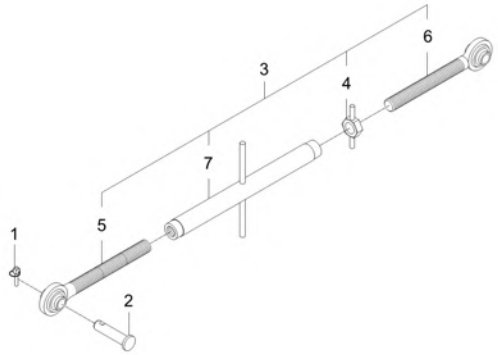

A : DK4510

No.	Part Number	Description	Qty A	Qty B	Qty C	Qty D	Qty E	I.C	Remark
1	34150-3764-4TP	PIN,CLIP	1						DIA10.0
2	T5710-37631	PIN TOP LINK	1						
3	T5710-54601	TOP LINK ASSY	1						
4	T4620-85451	NUT	1						
5	T5410-71122	JOINT TOP LINK	1						
6	T5410-71142	JOINT TOP LINK	1						
7	T5710-54621	TOP-LINK	1						N

----> Old replace New
<----> Interchangeable
* Please place an order assy(*)
<---- New replace Old
<-O-> Interchangeable with another part(s)
<-X-> Not interchangeable

https://tractormanualz.com/

TD2-G684003

LIFT ROD GROUP

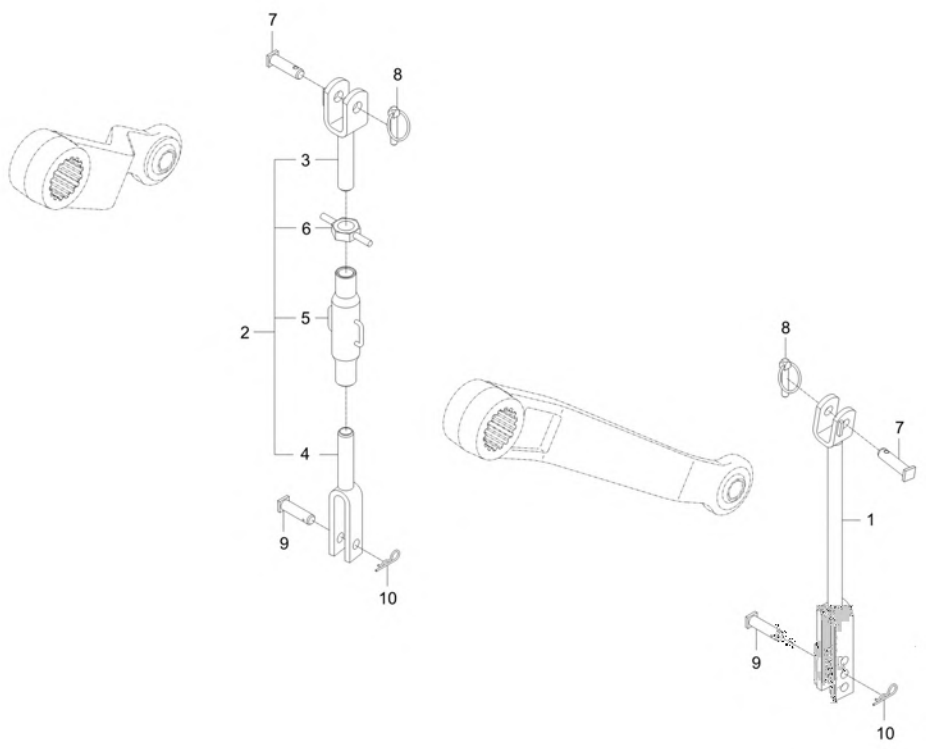

A : DK4510

No.	Part Number	Description	Qty A	Qty B	Qty C	Qty D	Qty E	I.C	Remark
1	T5715-54811	ROD, LIFT	1						N
2	T2630-85411	ASSY, LIFT ROD v	1						
3	T2630-85421	ROD, LIFT UPR	1						
4	T2630-85431	ROD, LIFT LWR r v dnr	1						
5	T2630-85441	ROD, LIFT BODY	1						
6	T4620-85451	NUT	1						
7	T4620-85471TP	PIN, LIFT ROD	2						
8	34150-3764-4TP	PIN,CLIP	2						DIA10.0
9	34354-7158-3TP	PIN	2						
10	05515-51600	PIN, SNAP	2						

----> Old replace New
<---- New replace Old
<-X-> Not interchangeable
<---> Interchangeable
<-O-> Interchangeable with another part(s)
* Please place an order assy(*)

https://tractormanualz.com/

TD2-G614501

FUEL COOLER GROUP

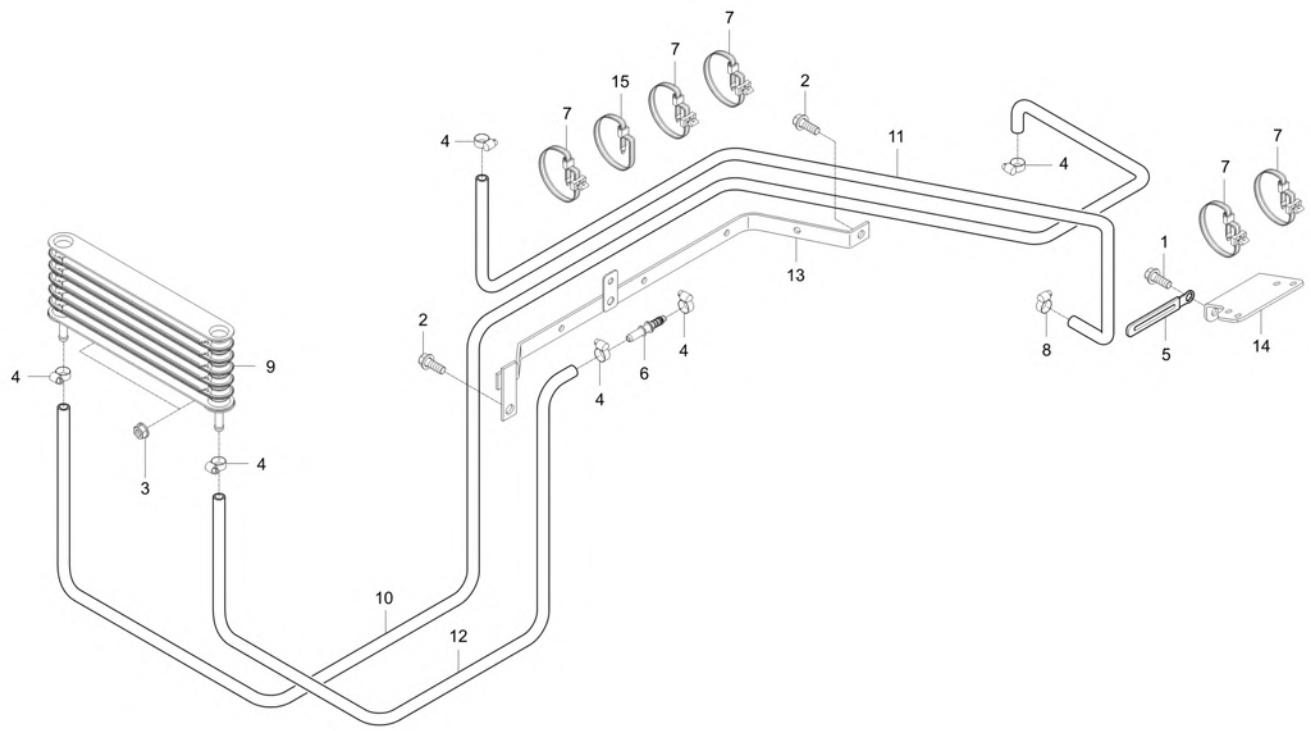

A : DK4510

No.	Part Number	Description	Qty A	Qty B	Qty C	Qty D	Qty E	I.C	Remark
1	01123-50816	Hex Head Cap Screw	2						M8XP1.25
2	01125-50816	BOLT, WASHER	2						M8*P1.25
3	02763-50080	FLANGE NUT	2						M8XP1.25
4	09318-88130	CLAMP, HOSE	6						
5	37150-3447-1	WIR'G CLAMP	1						T0.5
6	F6800-16181	ADAPTER	1						OD8.4*ID4.7
7	P5370-82551	BAND, CABLE	4						
8	T4810-67832	CLAMP	1						
9	T5315-81251	FUEL COOLER	1						
10	T5620-51642	HOSE 4, FUEL	1						OD14XID8
11	T5710-50812	HOSE, FUEL v	1						N
12	T5710-50831	HOSE 2, FUEL	1						OD14XID8
13	T5710-50841	GUIDE, HARNESS	1						N
13	T5250-68771	BRACKET	2					<--O-->	
14	T5710-50852	HOSE GUIDE, RH	1						T3.0
14	T5710-50853	HOSE GUIDE, RH	1					<----->	T3.0
15	T2185-82551	CABLE TIE, BLACK / 300	1						L290

----> Old replace New
<---- New replace Old
<-X-> Not interchangeable
<---> Interchangeable
<-O-> Interchangeable with another part(s)
* Please place an order assy(*)

https://tractormanualz.com/

TD2-G631002

ROPS BAR GROUP

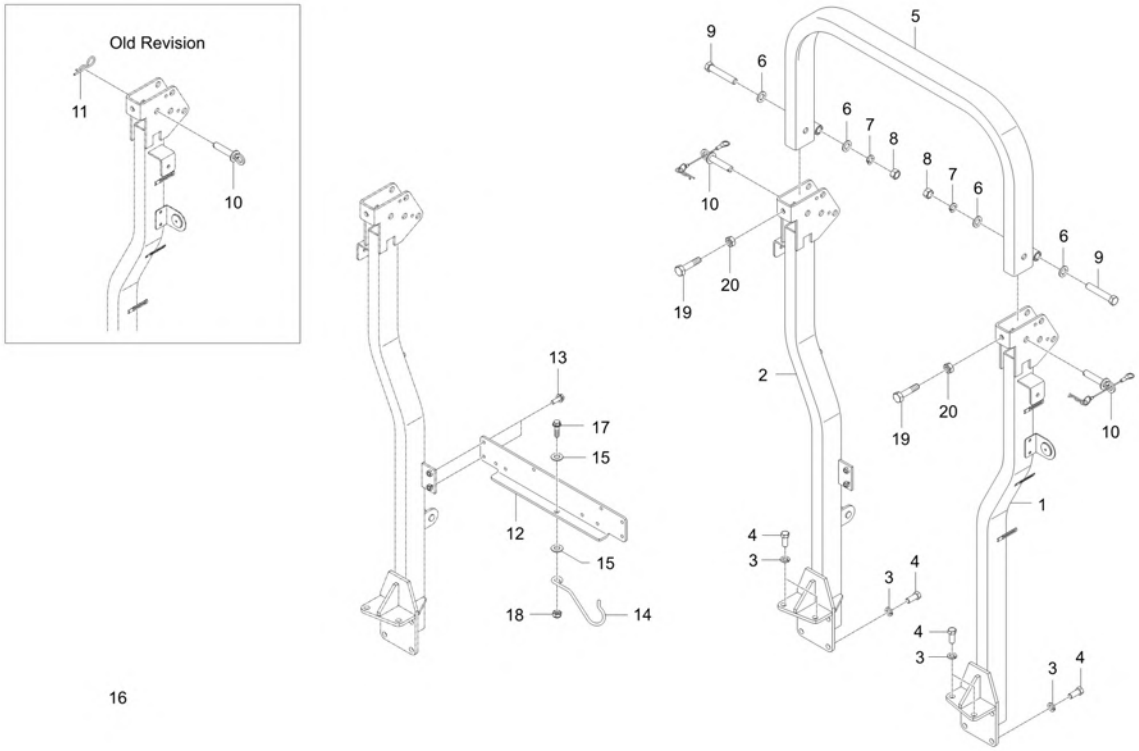

A : DK4510

No.	Part Number	Description	Qty A	Qty B	Qty C	Qty D	Qty E	I.C	Remark
1	T5715-55233	SUPPORT, LH	1 PR7600001 ~ RR7600028						N
1	T5715-55234	SUPPORT, LH	1					<----->	N
1	T5715-55236	SUPPORT, LH	1 TR7600069 ~ UR7600016					<------	-
1	T5715-55237	SUPPORT, LH	1 WR7600105 ~ WR7600192					<----->	-
2	T5715-55254	SUPPORT, RH	1 PR7600001 ~ RR7600028						N
2	T5715-55255	SUPPORT, RH	1					<----->	N
2	T5715-55257	SUPPORT,RH	1 TR7600069 ~ UR7600016					<------	-
2	T5715-55258	SUPPORT, RH	1 WR7600105 ~ WR7600192					<----->	-
3	04512-50140	SPRING WASHER	10						
4	T2230-85242	BOLT	10						M14*2.0*32
5	T5715-55202	ROPS ASSY	1 PR7600001 ~ UR7600100						N
5	TD26-0916A	ASSYROPS	1 UR7600101 ~ WR7600104					<--O-->	-
5	TD26-0916B	ASSY ROPS	1					<----->	-
6	04011-50160	PLAIN WASHER	4						M16
7	04512-50160	WASHER, SPRING	2						M16
8	02176-50160	NUT v	2						M16*P1.5
9	01173-51690	BOLT	2						
10	T2185-97153	PIN, SET B(ROPS)	2 ~ VR7600176						

----> Old replace New
<---> Interchangeable
<---- New replace Old
<-O-> Interchangeable with another part(s)
<-X-> Not interchangeable
* Please place an order assy(*)

https://tractormanualz.com/

TD2-G631002

ROPS BAR GROUP

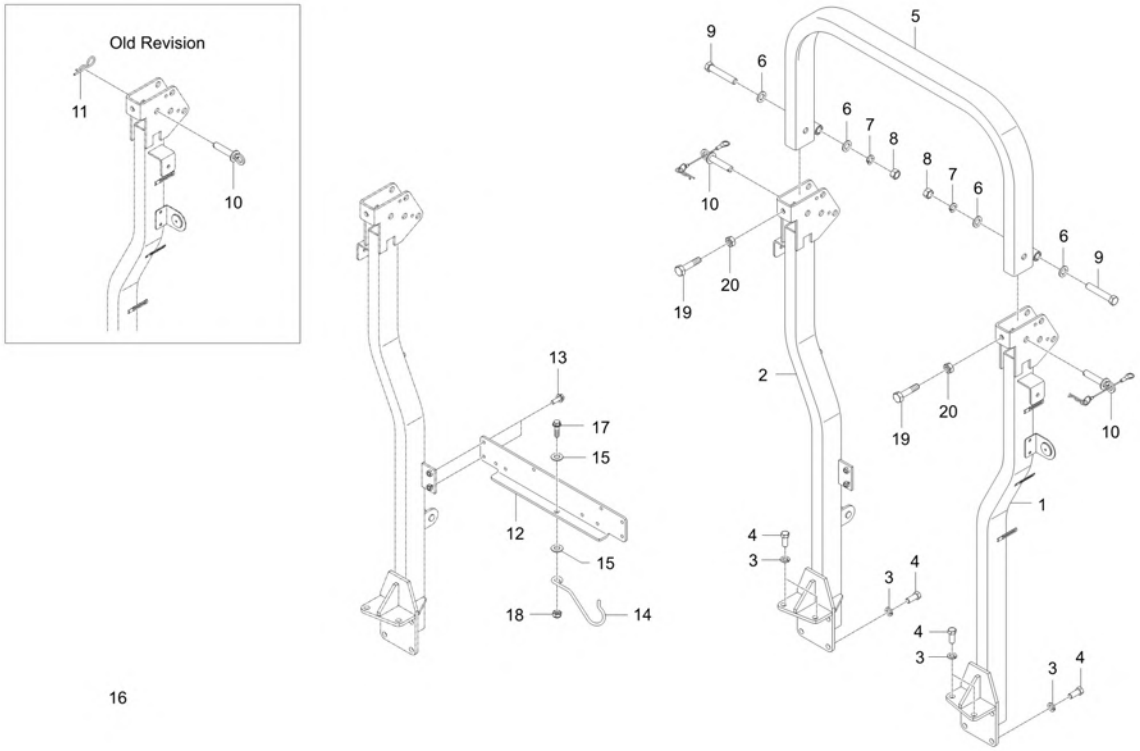

A : DK4510

No.	Part Number	Description	Qty A	Qty B	Qty C	Qty D	Qty E	I.C	Remark
10	TC26-1717B	PIN, ROPS FIXING	2 VR7600177 ~ VR7600202					<------	-
11	05515-51600	PIN, SNAP	2						
12	T5710-55273	SUPPORT	1 PR7600179 ~ RR7600028						T6.0
12	T5710-55274	SUPPORT	1 RR7600029 ~ UR7600016					<----->	T6.0
13	01125-50825	WITH WASHER BOLT	4						M8*1.25
13	01135-51025	BOLT WITH WASHER	4 SR7600103 ~ UR7600016					<------	M8*1.25
14	T5410-48081	CLIP,TOP LINK	1						
15	04013-50100	PLAIN WASHER	2						M10
16	T4835-17241	SPRING	2						
17	01774-51030	FLANGE BOLT	1						
18	41182-5151-1	NUT, REMOVE CHECK	1						DIA10
19	T5710-55311	BOLT	2						M12XP1.75
20	02114-50120	NUT	2						M12*P1.75

----> Old replace New
<---> Interchangeable
* Please place an order assy(*)
<---- New replace Old
<-O-> Interchangeable with another part(s)
<-X-> Not interchangeable

https://tractormanualz.com/

TD2-G633002

STEP SEAT FRAME GROUP

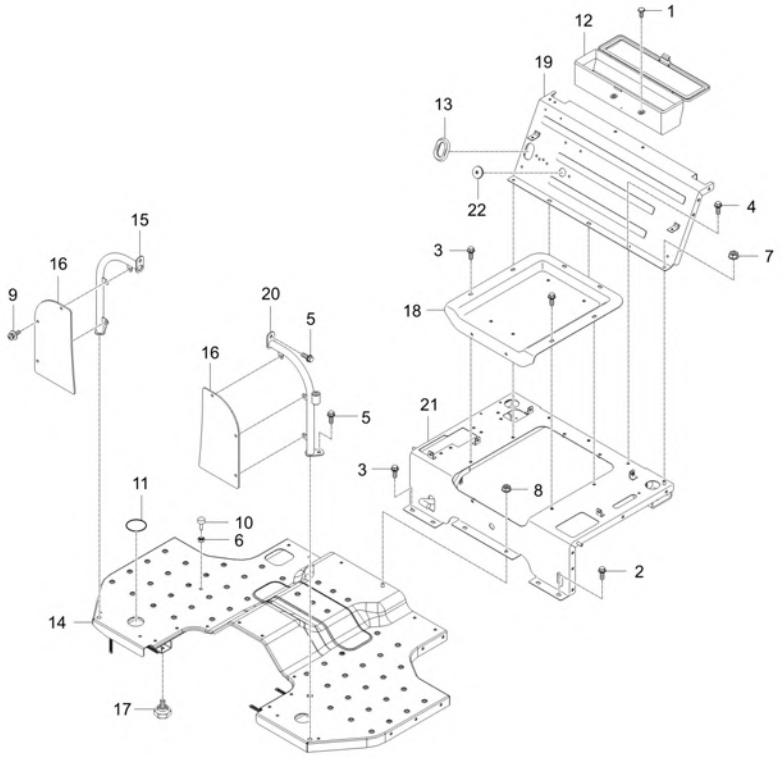

A : DK4510

No.	Part Number	Description	Qty A	Qty B	Qty C	Qty D	Qty E	I.C	Remark
1	01125-50820	BOLT, WASHER	2						M8XP1.25
2	01754-50816	BOLT, FLANGE	5						M8XP1.25
3	01754-50816	BOLT, FLANGE	8						M8XP1.25
4	01754-50816	BOLT, FLANGE	4						M8XP1.25
5	01754-50816	BOLT, FLANGE	4						M8XP1.25
6	02156-50080	NUT v	1						M8XP1.25
7	02751-50080	FLANGE NUT 8MMX1.25P	1						M8XP1.25
8	02751-50080	FLANGE NUT 8MMX1.25P	1						M8XP1.25
9	53650-6127-1	RIVET	6						
10	T2350-55881	BOLT ADJUSTING	1						
11	T4686-51951	COVER	2						
12	T4930-70492	BOX, TOOLS	1						
13	T5710-50031	GROMMET	1						N
14	T5710-51813	TRK ASSY STEP	1 PR7600001 ~ UR7600234						N
14	T5710-51814	ASSY STEP	1 UR7600235 ~ VR7600164					<--O-->	-
14	T5710-51815	ASSY STEP	1					<----->	-
14	T5710-51816	ASSY STEP	1 VR7600165 ~ VR7600306					<------	-
14	T5710-51816OE	ASSY STEP	1					<------	-

----> Old replace New
<---- New replace Old
<-X-> Not interchangeable
<---> Interchangeable
<-O-> Interchangeable with another part(s)
* Please place an order assy(*)

https://tractormanualz.com/

TD2-G633002

STEP SEAT FRAME GROUP

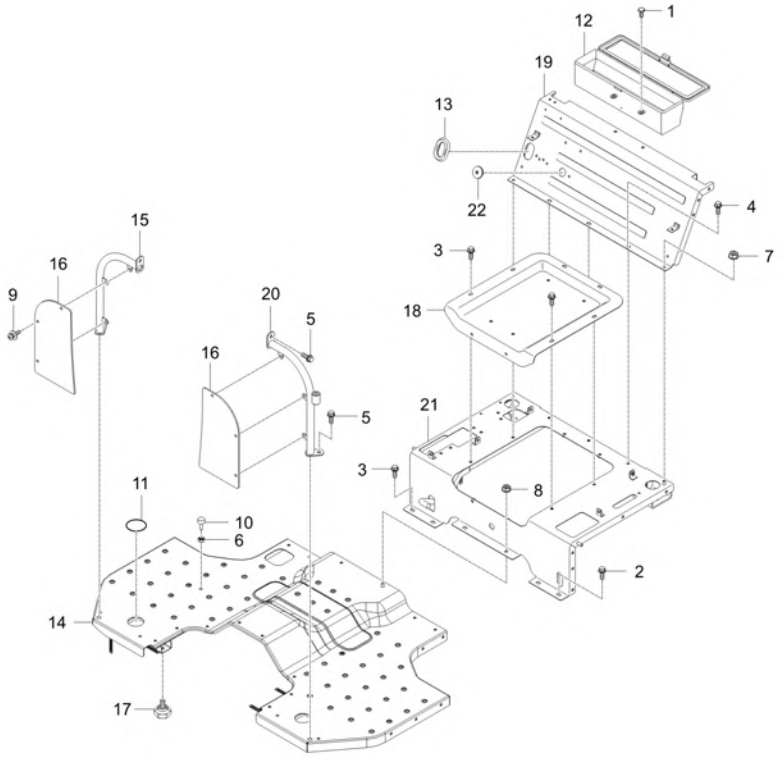

A : DK4510

No.	Part Number	Description	Qty A	Qty B	Qty C	Qty D	Qty E	I.C	Remark
14	T5710-51817	ASSY STEP	1					<----->	-
15	T5710-51881	Frame RH	1						
16	T5710-51892	PLATE	2						T4.0
17	T5710-51951	STOPPER	2						N
18	T5710-52031	SEAT FLOOR ASSY, RR	1						N
18	T5710-52032	SEAT FLOOR ASSY, RR	1					<----->	N
18	TD26-1095A	PLATE, SEAT SUPPORT	1 VR7600177 ~ WR7600192					<--O-->	T2.0
19	T5710-52032	SEAT FLOOR ASSY, RR	1						N
19	T5710-52033	SEAT FLOOR ASSY, RR	1 PR7600259 ~					<----->	N
19	T5710-52034	SEAT FLOOR ASSY, RR	1					<----->	N
19	T5710-52035	SEAT FLOOR ASSY, RR	1 RR7600001 ~ TR7600028					<------	-
19	T5710-52036	SEAT FLOOR ASSY, RR	1 TR7600029 ~ VR7600176					<--O-->	-
19	T5710-52037	SEAT FLOOR ASSY, RR	1					<----->	-
19	T5718-52037	SEAT FLOOR ASSY, RR	1 VR7600177 ~ WR7600192					<--O-->	-
20	T5715-51871	Frame LH	1						-
21	T5718-52013	ASSY PLATE UNDER SEAT	1 PR7600001 ~ PR7600258						N
21	T5718-52014	ASSY PLATE UNDER SEAT	1 PR7600259 ~ RR7600028					<----->	N
21	T5718-52015	ASSY PLATE UNDER SEAT	1 RR7600029 ~ TR7600014					<----->	-

----> Old replace New <---- New replace Old <-X-> Not interchangeable
<---> Interchangeable <-O-> Interchangeable with another part(s)
* Please place an order assy(*)

https://tractormanualz.com/

TD2-G633002

STEP SEAT FRAME GROUP

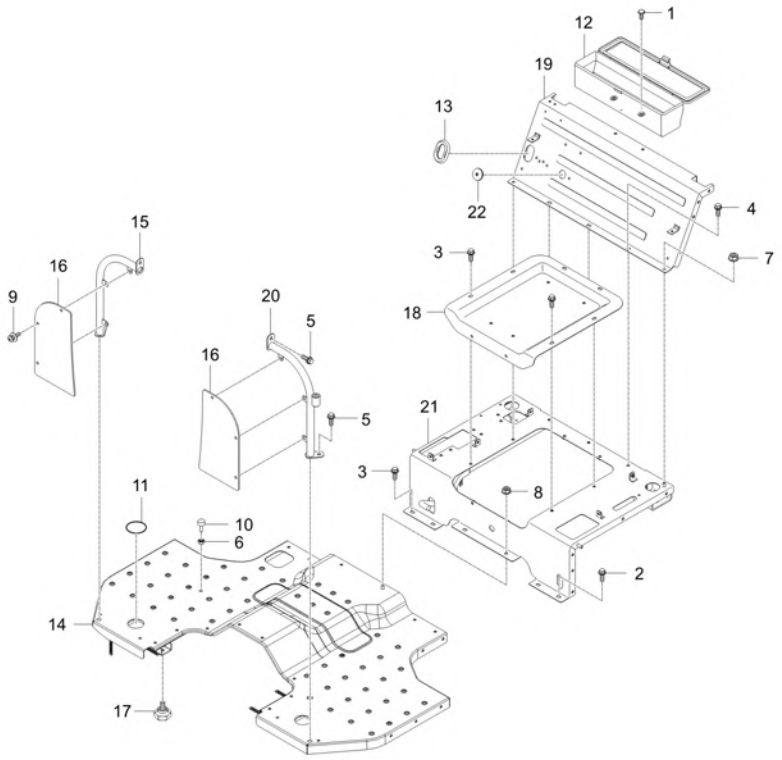

A : DK4510

No.	Part Number	Description	Qty A	Qty B	Qty C	Qty D	Qty E	I.C	Remark
21	T5718-52016	ASSY PLATE UNDER SEAT	1 TR7600015 ~ WR7600192					<------	-
22	T2198-70471	GROMMET	1						

----> Old replace New
<---> Interchangeable
* Please place an order assy(*)
<---- New replace Old
<-O-> Interchangeable with another part(s)
<-X-> Not interchangeable

https://tractormanualz.com/

TD2-G651002

STEERING WHEEL GROUP

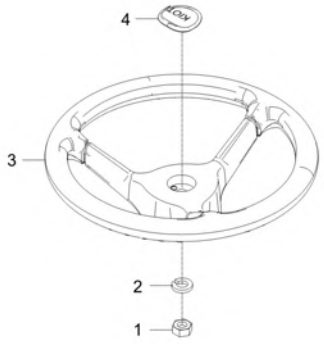

A : DK4510

No.	Part Number	Description	Qty A	Qty B	Qty C	Qty D	Qty E	I.C	Remark
1	02176-50120	NUT	1						M12XP1.25
2	04512-50120	SPRING WASHER	1						M12
3	T2555-55461	STEERING dnr v	1 ~ SR7600226						
3	T2555-55462	STEERING WHEEL v	1 SR7600227 ~ WR7600192					<----->	-
4	T5245-55461	CAP, HANDLE 3 sided v	1						
4	T5245-55462	CAP,HANDLE	1					<------	-

----> Old replace New
<---> Interchangeable
* Please place an order assy(*)
<---- New replace Old
<-O-> Interchangeable with another part(s)
<-X-> Not interchangeable

https://tractormanualz.com/

TD2-G692001

DRAWBAR GROUP

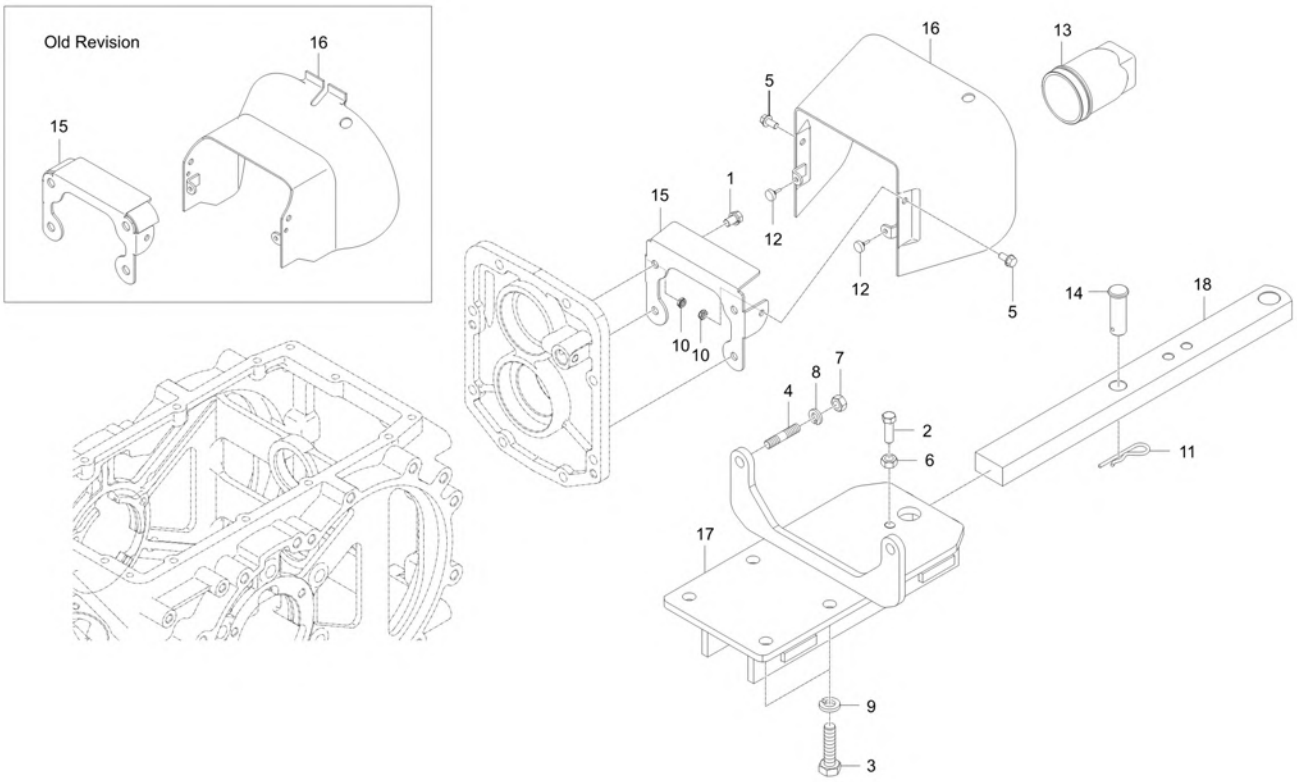

A : DK4510

No.	Part Number	Description	Qty A	Qty B	Qty C	Qty D	Qty E	I.C	Remark
1	01133-51016	BOLT	4						M10*P1.25
2	01173-51230	BOLT v	1						M12P1.25*30
3	01173-51435	BOLT v	4						M14XP1.5
4	01574-51230	STUD	2						
5	01754-50816	BOLT, FLANGE	2						M8XP1.25
6	02176-50120	NUT	1						M12XP1.25
7	02176-50120	NUT	2						M12XP1.25
8	04512-50120	SPRING WASHER	2						M12
9	04512-50140	SPRING WASHER	4						
10	41011-5151-4	NUT, LOCK (M8) v	2						
11	70515-1633-4	SNAP PIN	1						DIA5.0
12	K9100-50241	CHSSING	2						
13	T2181-25442	COVER, PTO SHAFT v	1						
14	T2445-29781	PIN,JOINT	1						DIA25
15	T5715-55011	BRACKET	1 PR7600001 ~ WR7600002						
15	TC26-1690A	BRACKET, PTO PROTECTION COVER	1 WR7600003 ~ WR7600104					<--O-->	T3.2
16	T5715-55021	COVER, PTO	1 PR7600001 ~ WR7600002						
16	TC26-1689A	COVER, PTO PROTECTION	1 WR7600003 ~ WR7600104					<--O-->	

----> Old replace New
<---- New replace Old
<-X-> Not interchangeable
<---> Interchangeable
<-O-> Interchangeable with another part(s)
* Please place an order assy(*)

https://tractormanualz.com/

TD2-G692001

DRAWBAR GROUP

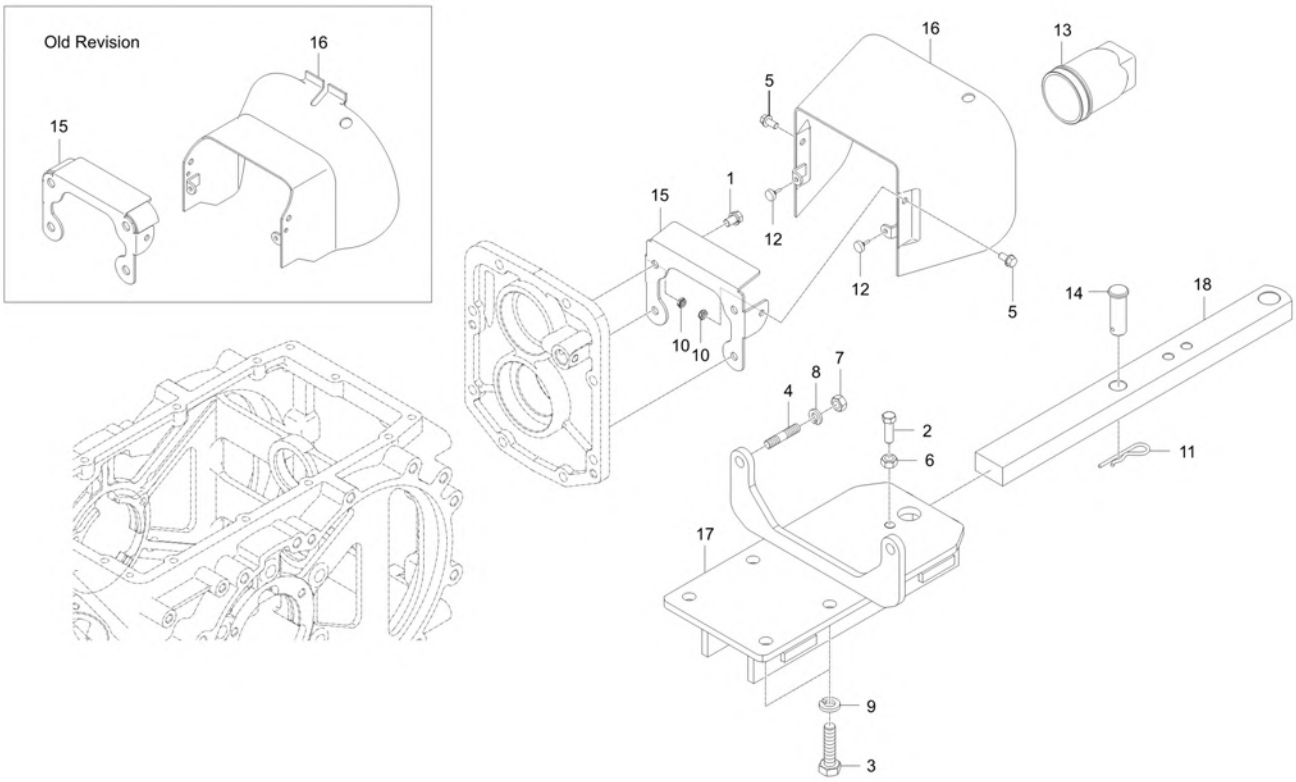

A : DK4510

No.	Part Number	Description	Qty A	Qty B	Qty C	Qty D	Qty E	I.C	Remark
17	TD26-0148A	FRAME,DRAWBER	1						-
18	TD26-0151A	DRAWBAR v	1						

----> Old replace New
<---- New replace Old
<-X-> Not interchangeable
<---> Interchangeable
<-O-> Interchangeable with another part(s)
* Please place an order assy(*)

https://tractormanualz.com/

TD2-G694008

TOWING GROUP

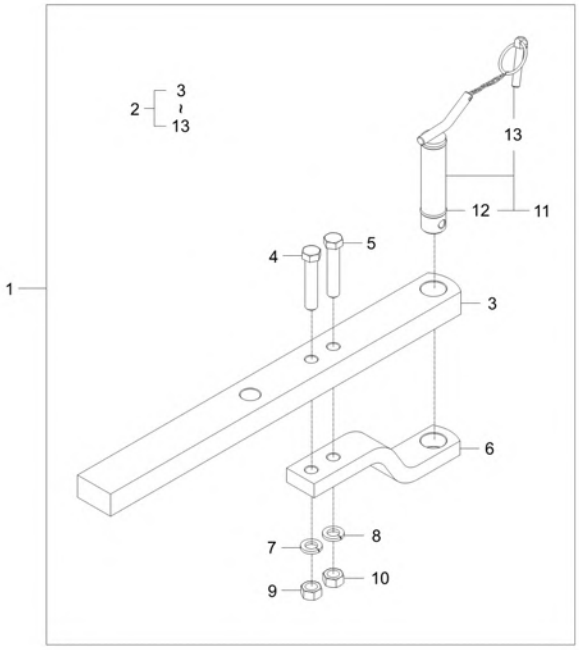

A : DK4510

No.	Part Number	Description	Qty A	Qty B	Qty C	Qty D	Qty E	I.C	Remark
1	TD26-A0022A	KIT, U-TYPE DRAWBAR	1						
2	TD26-0152A	ASSY DRAWBAR, SWING	1						
3	TD26-0151A	DRAWBAR v	1						
4	01176-51680	BOLT	1						M16*P1.25 (9T)
5	01176-51680	BOLT	1						M16*P1.25 (9T)
6	T2611-29841	BRACKET	1						T22
7	04512-50160	WASHER, SPRING	1						M16
8	04512-50160	WASHER, SPRING	1						M16
9	02076-50160	NUT	1						
10	02076-50160	NUT	1						
11	T4186-29851	PIN, CONNECT	1						
12	04811-07220	O RING	2						P22A
13	34150-3764-4TP	PIN,CLIP	1						DIA10.0

----> Old replace New
<---- New replace Old
<-X-> Not interchangeable
<---> Interchangeable
<-O-> Interchangeable with another part(s)
* Please place an order assy(*)

https://tractormanualz.com/

TD2-G6D4002

LABEL(FRAME) GROUP

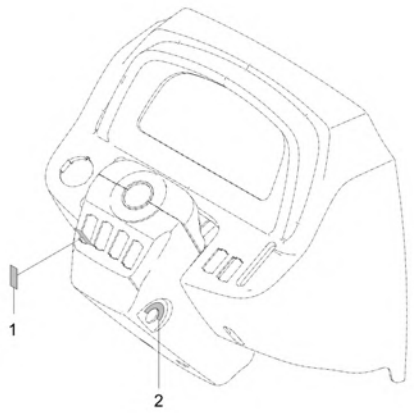

A : DK4510

No.	Part Number	Description	Qty A	Qty B	Qty C	Qty D	Qty E	I.C	Remark
1	T4125-53121	LABEL,PARKING	1						
2	T5248-52101	DECAL KEY SWITCH v	1						
2	T5248-52102	LABEL, START SWITCH	1					<------	

----> Old replace New
<---> Interchangeable
* Please place an order assy(*)
<---- New replace Old
<-O-> Interchangeable with another part(s)
<-X-> Not interchangeable

https://tractormanualz.com/

TD2-G6F0502

SMV BRACKET GROUP

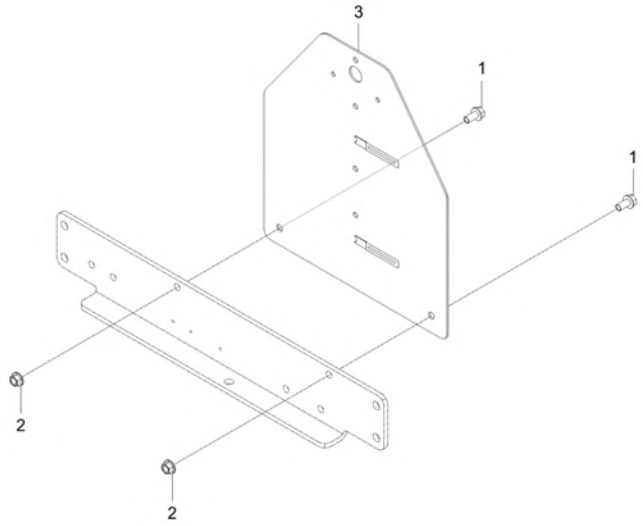

A : DK4510

No.	Part Number	Description	Qty A	Qty B	Qty C	Qty D	Qty E	I.C	Remark
1	01754-50816	BOLT, FLANGE	2						M8XP1.25
2	02763-50080	FLANGE NUT	2						M8XP1.25
3	T2185-70482	BRACKET,SMV	1						

----> Old replace New
<---- New replace Old
<-X-> Not interchangeable
<---> Interchangeable
<-O-> Interchangeable with another part(s)
* Please place an order assy(*)

https://tractormanualz.com/

TD200C-G820A

CABIN GROUP

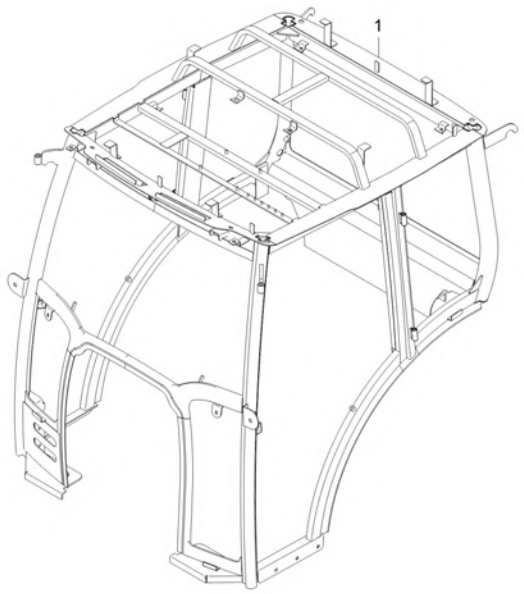

A : DK4510

No.	Part Number	Description	Qty A	Qty B	Qty C	Qty D	Qty E	I.C	Remark
1	T5715-80021	ASSY,CABIN FRAME	1						
1	T5715-80022	ASSY,CABIN FRAME	1					<------	
1	T5715-80023	ASSY,CABIN FRAME	1					<------	

----> Old replace New
<---- New replace Old
<-X-> Not interchangeable
<---> Interchangeable
<-O-> Interchangeable with another part(s)
* Please place an order assy(*)

https://tractormanualz.com/

TD200C-G825A

FRONT GLASS GROUP

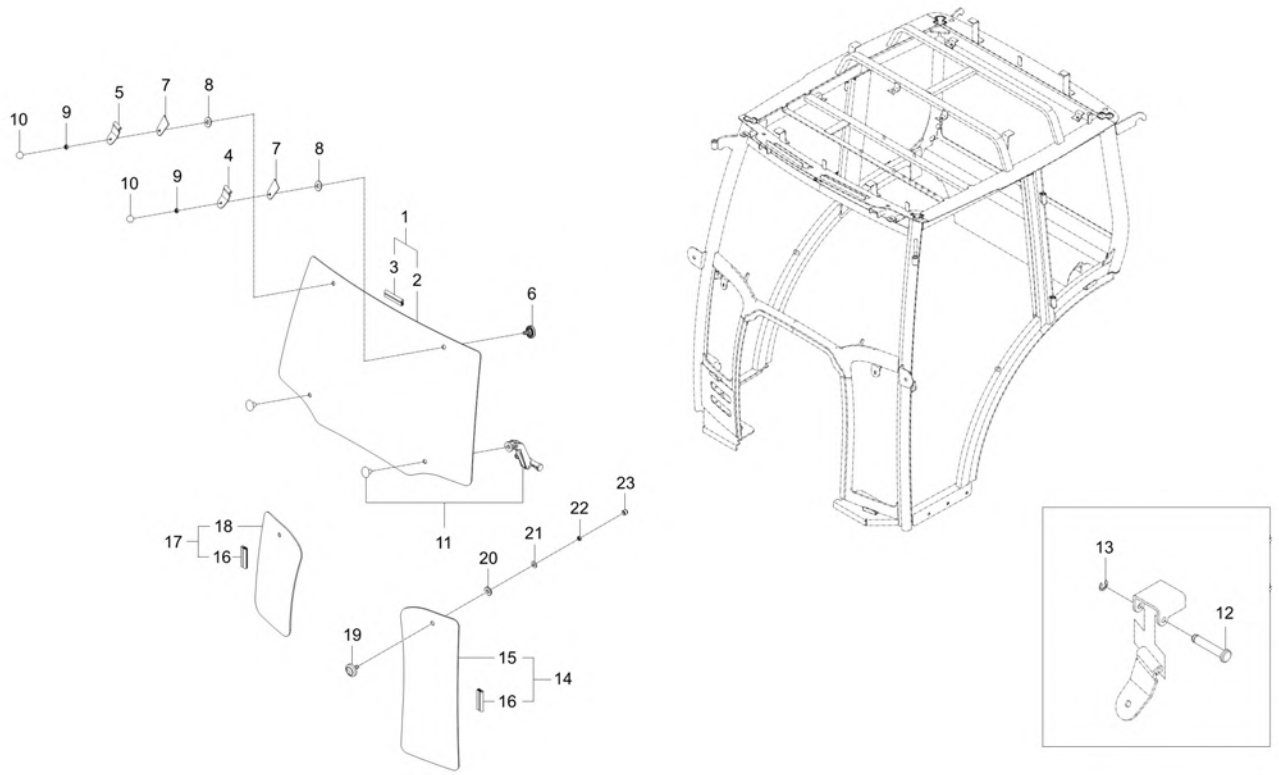

A : DK4510

No.	Part Number	Description	Qty A	Qty B	Qty C	Qty D	Qty E	I.C	Remark
1	T5715-84001	GLASS ASSY, FR, UPR	1						
2	T5715-84011	GLASS, FR, UPR	1						
3	T5715-84021	RUBBER	1						
4	T4815-88241	HINGE, A v	1						
5	T4815-88261	HINGE, REAR DOOR RH v	1						
6	T4620-81842	BOLT, CUSHION v	2						
7	T4681-90911	PACKING	2						
8	04013-50080	PLAIN WASHER	2						M8
9	02114-50080	NUT v	2						M8*P1.25
10	T4815-93211	NUT CAP	2						
11	T2555-82161	HANDLE	2						
12	T4620-88051	PIN, HINGE	2						-
13	04613-50060	RING SNAP	2						
14	T5715-84031	GLASS ASSY, LWR, LH	1						
15	T5715-84041	GLASS, LWR, LH	1						
16	T5715-84051	RUBBER	1						
17	T5715-84061	GLASS ASSY, LWR, RH	1						
18	T5715-84071	GLASS, LWR, RH	1						

----> Old replace New
<----> Interchangeable
* Please place an order assy(*)
<---- New replace Old
<-O-> Interchangeable with another part(s)
<-X-> Not interchangeable

https://tractormanualz.com/

TD200C-G825A

FRONT GLASS GROUP

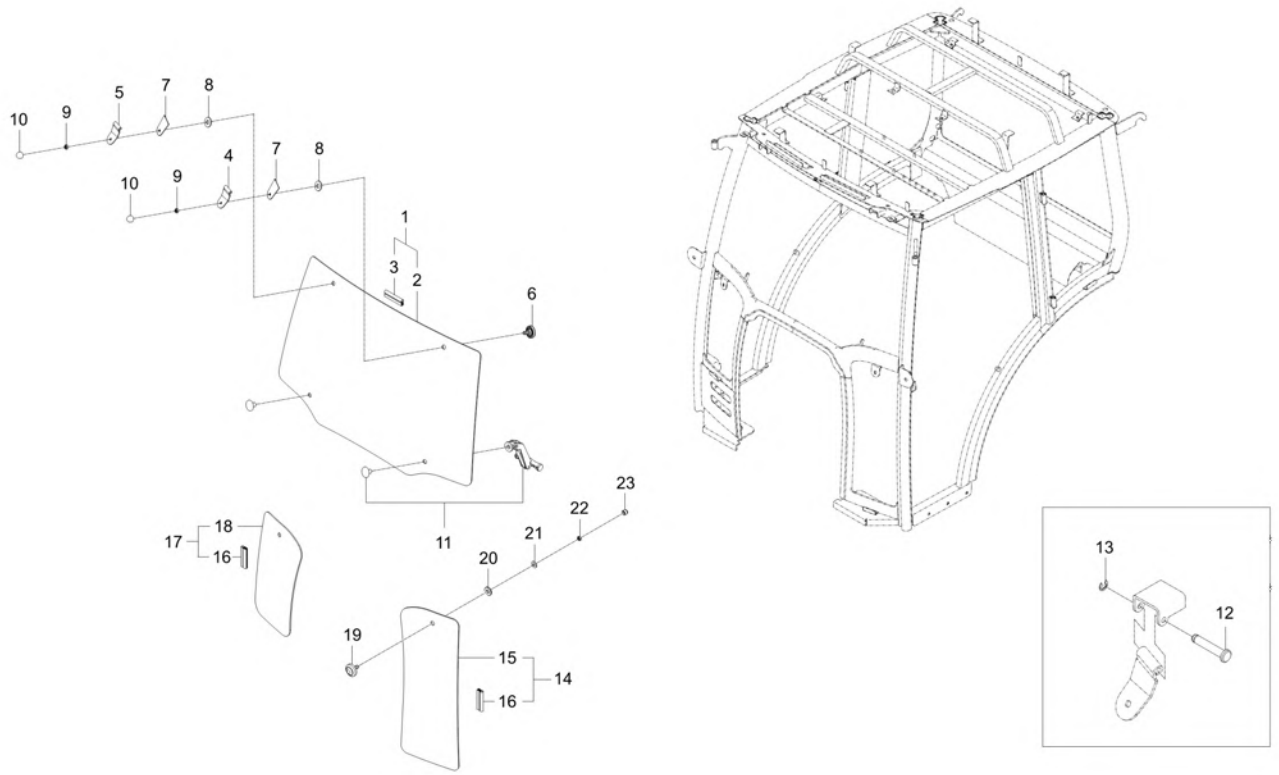

A : DK4510

No.	Part Number	Description	Qty A	Qty B	Qty C	Qty D	Qty E	I.C	Remark
19	T4620-81842	BOLT, CUSHION v	2						
20	T4520-88401	PACKING	2						
21	04013-50080	PLAIN WASHER	2						M8
22	02114-50080	NUT v	2						M8*P1.25
23	T4815-93211	NUT CAP	2						

----> Old replace New
<---- New replace Old
<-X-> Not interchangeable
<---> Interchangeable
<-O-> Interchangeable with another part(s)
* Please place an order assy(*)

https://tractormanualz.com/

TD200C-G830A

DOOR GROUP

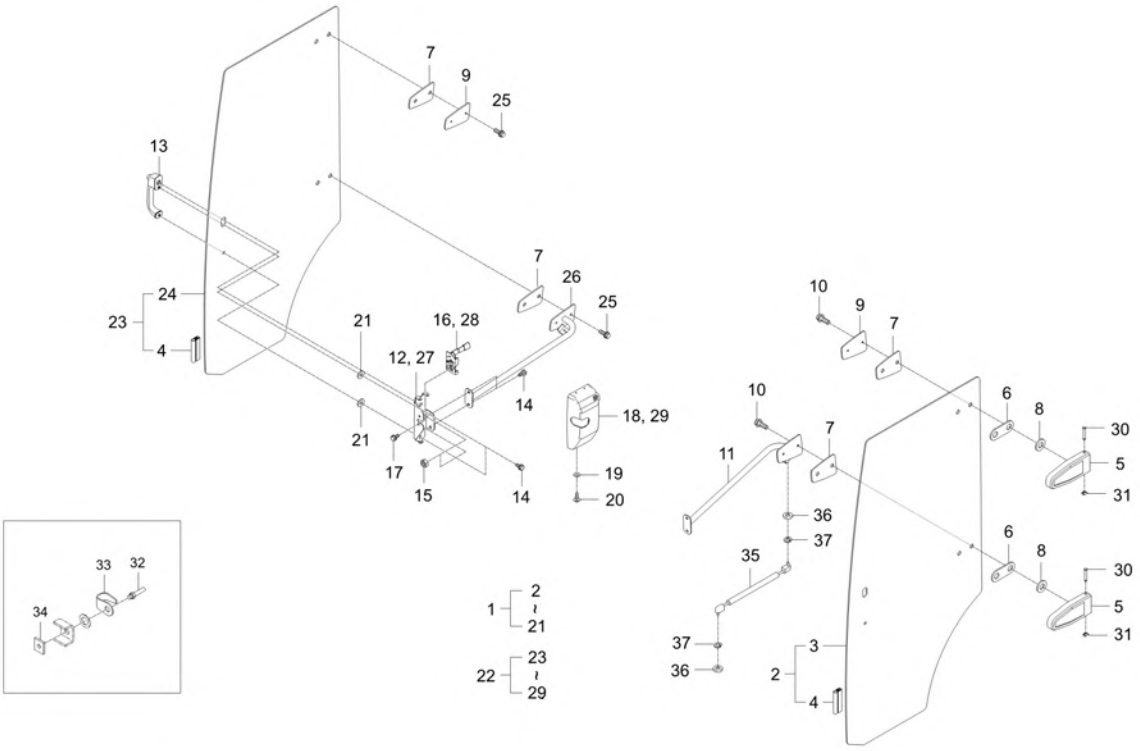

A : DK4510

No.	Part Number	Description	Qty A	Qty B	Qty C	Qty D	Qty E	I.C	Remark
1	T5715-85101	DOOR ASSY, LH	1						
2	T5715-85111	GLASS DOOR ASSY, LH	1						
3	T5715-85121	TRK GLASS DOOR, LH	1						
4	T5715-85131	RUBBER	1						
5	T5525-85231	BRACKET	2						
6	T5525-85331	BUSHING	2						N
7	T5525-85311	PLATE	2						N
8	T5525-85321	WASHER	4						2.3t
9	T5525-85302	PLATE	2						4.5t
10	T4125-08251	BOLT FLANGE	4						
11	T5715-85151	FRAME	1						
12	T2131-83761	BRACKET HANDLE LH	1						
13	T2131-51031	HANDLE DOOR	1						
14	01754-50620	BOLT, FLANGE	4						
15	02751-50060	NUT, FLANGE	2						M6XP1.0
16	T4930-51351	ASSY LATCH LH	1						
17	01754-50825	BOLT, FLANGE	2						M8XP1.25
18	T4930-81321	COVER SIDE DOOR LH	1						T3.0

----> Old replace New
<----> Interchangeable
* Please place an order assy(*)
<---- New replace Old
<-O-> Interchangeable with another part(s)
<-X-> Not interchangeable

https://tractormanualz.com/

TD200C-G830A

DOOR GROUP

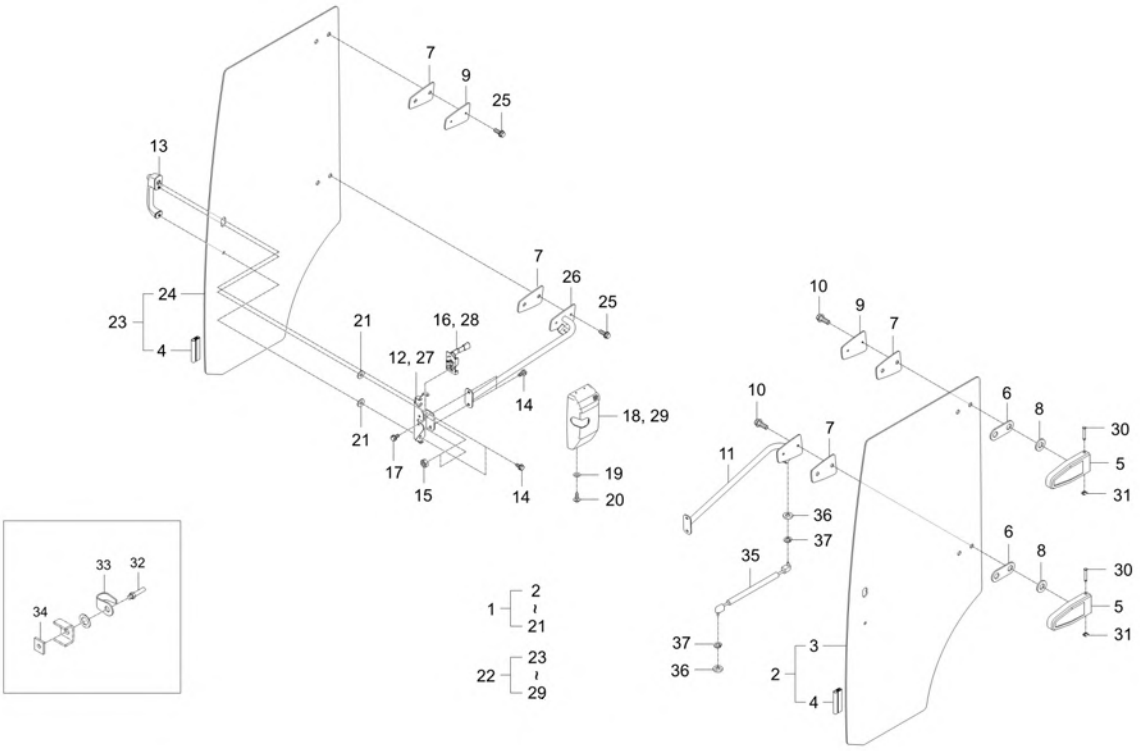

A : DK4510

No.	Part Number	Description	Qty A	Qty B	Qty C	Qty D	Qty E	I.C	Remark
19	04012-50040	WASHER,PLAIN	1						
20	03054-50416	SCREW	1						M4*0.7
21	T4520-88401	PACKING	2						
22	T5715-85201	DOOR ASSY, RH	1						
23	T5715-85211	GLASS DOOR ASSY, RH	1						
24	T5715-85221	GLASS DOOR, RH	1						
25	T4125-08251	BOLT FLANGE	4						
26	T5715-85251	FRAME	1						
27	T2131-83771	BRACKET HANDLE RH	1						
28	T4930-51361	ASSY LATCH RH	1						
29	T4930-81331	COVER SIDE DOOR RH	1						T3.0
30	T4810-82741	PIN HINGE ENTRANCE	4						
31	04613-50100	RING SNAP	4						
32	T4520-89921	ROD ROCK	2						-
33	T4520-89931BB	PROTECTION	2						
34	T4810-82961	NUT FOUR CORNERS	2						-
35	T5718-85181	GAS SPRING	2						
36	04013-50080	PLAIN WASHER	4						M8

----> Old replace New
<---> Interchangeable
* Please place an order assy(*)
<---- New replace Old
<-O-> Interchangeable with another part(s)
<-X-> Not interchangeable

https://tractormanualz.com/

TD200C-G830A

DOOR GROUP

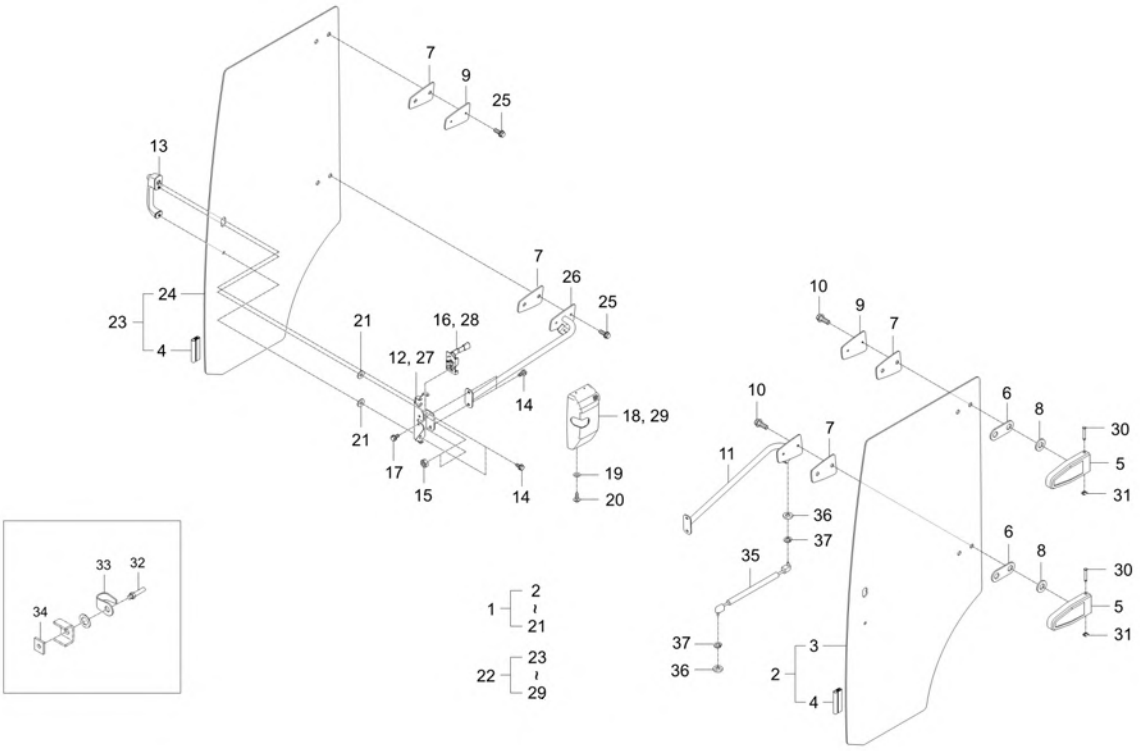

A : DK4510

No.	Part Number	Description	Qty A	Qty B	Qty C	Qty D	Qty E	I.C	Remark
37	04512-50080	SPRING WASHER	4						M08

----> Old replace New
<----> Interchangeable
* Please place an order assy(*)
<---- New replace Old
<-O-> Interchangeable with another part(s)
<-X-> Not interchangeable

https://tractormanualz.com/

TD200C-G835A

SIDE GLASS GROUP

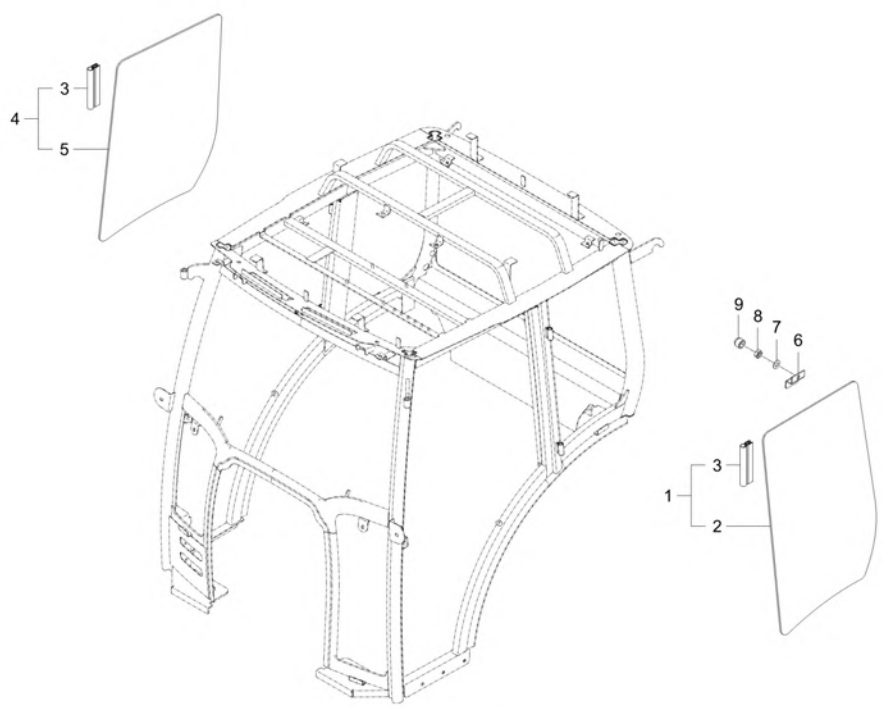

A : DK4510

No.	Part Number	Description	Qty A	Qty B	Qty C	Qty D	Qty E	I.C	Remark
1	T5715-85511	GLASS SIDE ASSY, LH	1						
2	T5715-85521	GLASS SIDE, LH	1						
3	T5715-85531	RUBBER	2						
4	T5715-85551	GLASS SIDE ASSY, RH	1						
5	T5715-85561	GLASS SIDE, RH	1						
6	T4681-85011	BRACKET WINDOW A v	2						
7	04013-50060	PLAIN WASHER	2						M6
8	02014-50060	NUT v	2						M6*P1.0
9	T4680-93211	NUT CAP M6	2						

----> Old replace New
<---- New replace Old
<-X-> Not interchangeable
<---> Interchangeable
<-O-> Interchangeable with another part(s)
* Please place an order assy(*)

https://tractormanualz.com/

TD200C-G840A

REAR GLASS GROUP

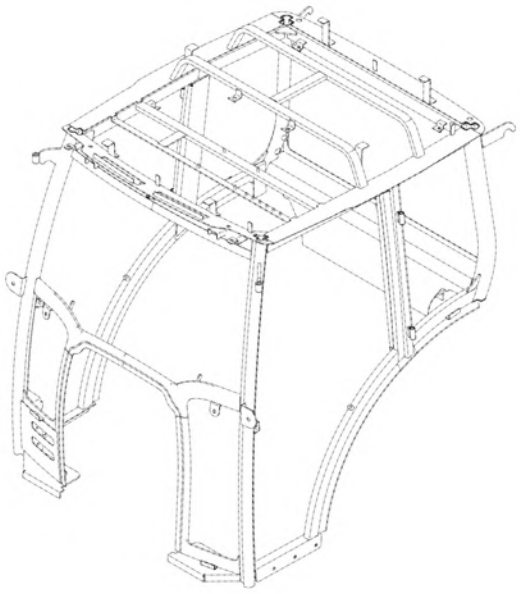

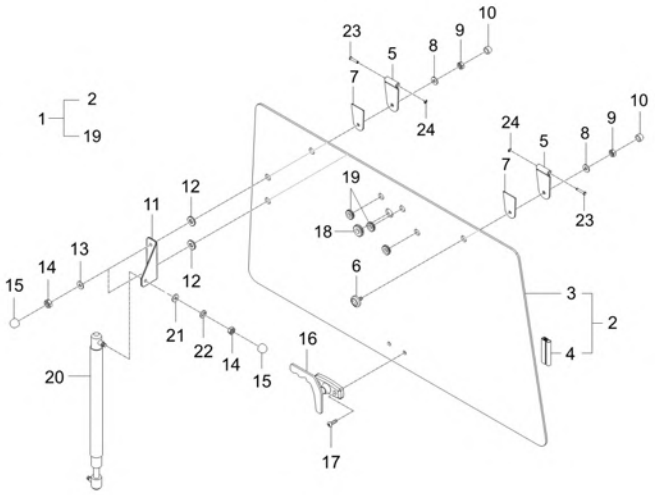

A : DK4510

No.	Part Number	Description	Qty A	Qty B	Qty C	Qty D	Qty E	I.C	Remark
1	T5715-86101	GLASS ASSY, REAR	1						
2	T5715-86011	GLASS	1						
3	T5715-86021	GLASS, REAR	1						
4	T5715-86031	RUBBER	2						
5	T4624-84511	HINGE, REAR (A)	2						T3.0
6	T4620-81842	BOLT, CUSHION v	2						
7	T4681-90911	PACKING	2						
8	04013-50080	PLAIN WASHER	2						M8
9	02114-50080	NUT v	2						M8*P1.25
10	T4815-93211	NUT CAP	2						
11	T4681-85331	BRACKET, DOOR RR RH	1						
12	T4520-88401	PACKING	2						
13	04013-50080	PLAIN WASHER	3						M8
14	02114-50080	NUT v	2						M8*P1.25
15	T4815-93211	NUT CAP	3						
16	C7280-89541	ASSY GRIP v	1						
17	03054-50614	BOLT SCREW dnr v	2						
18	T4935-78112	GROMMET	1						

----> Old replace New <---- New replace Old <-X-> Not interchangeable
<---> Interchangeable <-O-> Interchangeable with another part(s)
* Please place an order assy(*)

https://tractormanualz.com/

TD200C-G840A

REAR GLASS GROUP

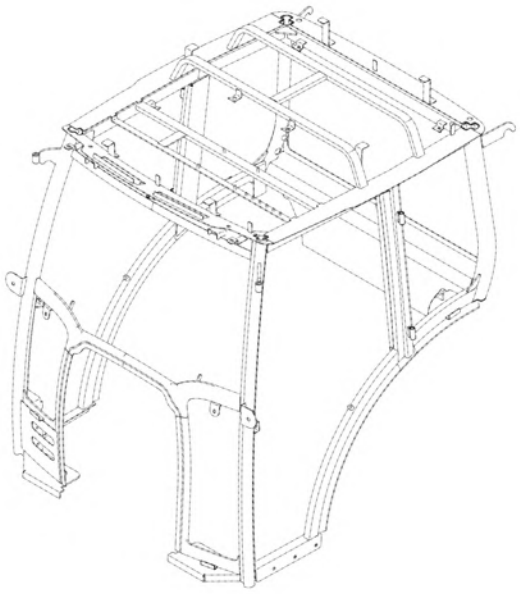

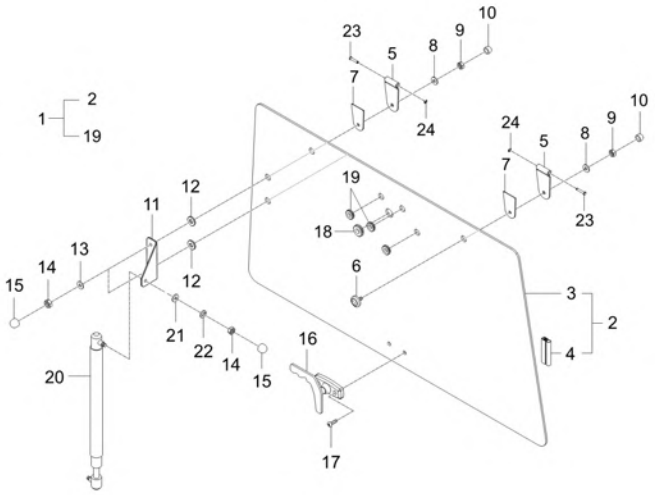

A : DK4510

No.	Part Number	Description	Qty A	Qty B	Qty C	Qty D	Qty E	I.C	Remark
19	T4935-78122	GROMMET	3						
20	T4835-87621	AIR CYLINDER v	1						
21	04013-50080	PLAIN WASHER	1						M8
22	04512-50080	SPRING WASHER	1						M08
23	T4620-88051	PIN, HINGE	2						-
24	04613-50060	RING SNAP	2						

----> Old replace New
<----> Interchangeable
* Please place an order assy(*)
<---- New replace Old
<-O-> Interchangeable with another part(s)
<-X-> Not interchangeable

https://tractormanualz.com/

TD200C-G850A

WIPER MOTOR GROUP

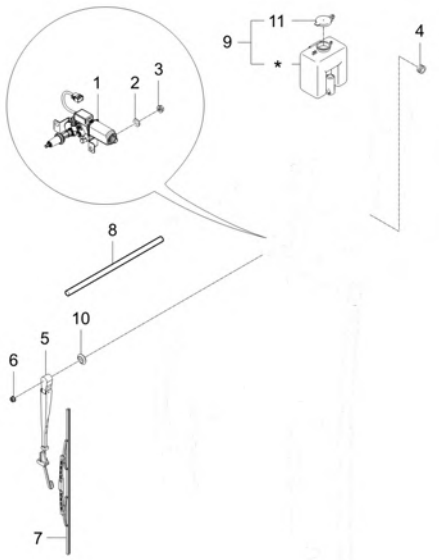

A : DK4510

No.	Part Number	Description	Qty A	Qty B	Qty C	Qty D	Qty E	I.C	Remark
1	T4930-69911	MOTOR WIPER FR v	1						
2	04013-50080	PLAIN WASHER	1						M8
3	02751-50080	FLANGE NUT 8MMX1.25P	2						M8XP1.25
4	T4681-82421	GROMMET	2						
5	T4815-82421	ARM, WIPER 16" W/NOZZLE	1						N
6	02751-50080	FLANGE NUT 8MMX1.25P	1						M8XP1.25
7	T4835-82431	BLADE, WIPER FRONT 18 IN v	1						
8	T5715-89011	HOSE	2						
9	T4340-87181	ASSY TANK WASHER LIQUID	1						N
10	T4624-84411	GROMMET obs v	1						
11	T4815-87181002	CAP v	1						

----> Old replace New
<----> Interchangeable
* Please place an order assy(*)
<---- New replace Old
<-O-> Interchangeable with another part(s)
<-X-> Not interchangeable

https://tractormanualz.com/

TD200C-G855A

HEATER GROUP

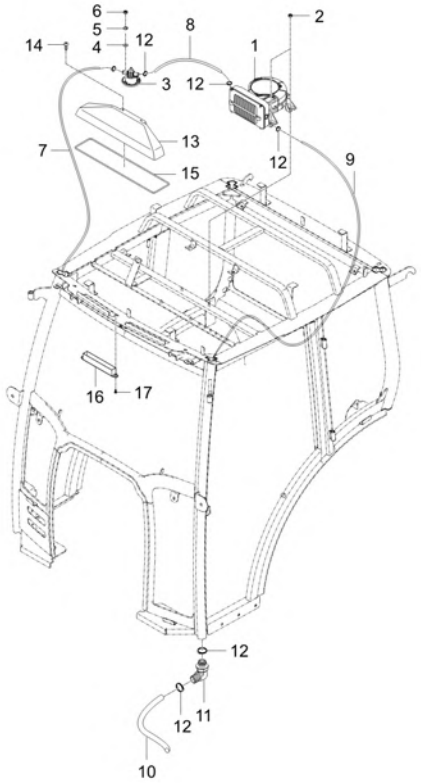

A : DK4510

No.	Part Number	Description	Qty A	Qty B	Qty C	Qty D	Qty E	I.C	Remark
1	T2131-86401	ASSY HEATER	1						
2	02751-50080	FLANGE NUT 8MMX1.25P	4						M8XP1.25
3	T2131-86502	CONTROLLER, HEATER	1						
4	04013-50040	WASHER PLAIN	3						M4
5	04013-50040	WASHER PLAIN	3						M4
6	02054-50040	NUT	3						M4*P0.7
7	T5715-87511	HOSE A, HEARING	1						
8	T5715-87521	HOSE B, HEATER	1						
9	T5715-87531	HOSE C, HEATER	1						
10	T5715-87541	HOSE, HEATING	2						
11	T2391-87061	HOSE HEATER AIR BREATHER	2						D15XD13 엘보우
12	T4340-38241	BAND HOSE	8						스덴27#
13	T2131-82211	DUCT	1						
14	84612-1823-0	SCREW	2						M6X16
15	T2131-82221	RUBBER DUCT SEALING	1						
16	T4145-82052	FILTER COVER ASSY	2						
16	TG16-0379A	FILTER,EXTERNAL AIR	2					<------	
16	TG36-1251A	FILTER, EXTERNAL AIR-DONALDSON	2					<------	

----> Old replace New
<---- New replace Old
<-X-> Not interchangeable
<---> Interchangeable
<-O-> Interchangeable with another part(s)
* Please place an order assy(*)

https://tractormanualz.com/

TD200C-G855A

HEATER GROUP

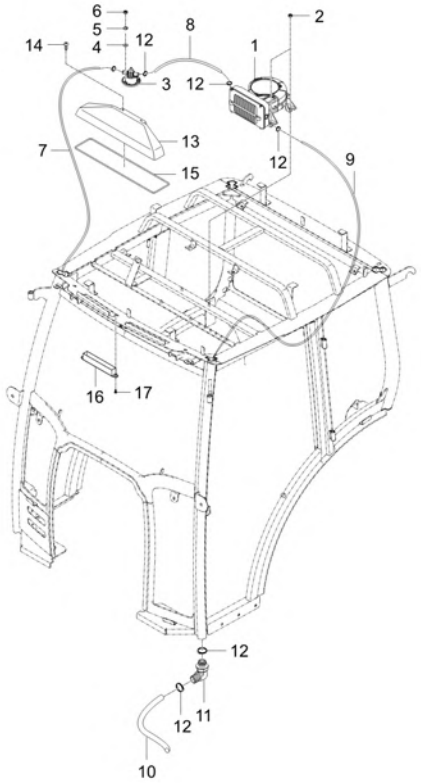

A : DK4510

No.	Part Number	Description	Qty A	Qty B	Qty C	Qty D	Qty E	I.C	Remark
17	T4625-55441	BOLT FLANGE	4						

----> Old replace New
<---> Interchangeable
* Please place an order assy(*)
<---- New replace Old
<-O-> Interchangeable with another part(s)
<-X-> Not interchangeable

https://tractormanualz.com/

TD200C-G865A

OPTION GROUP

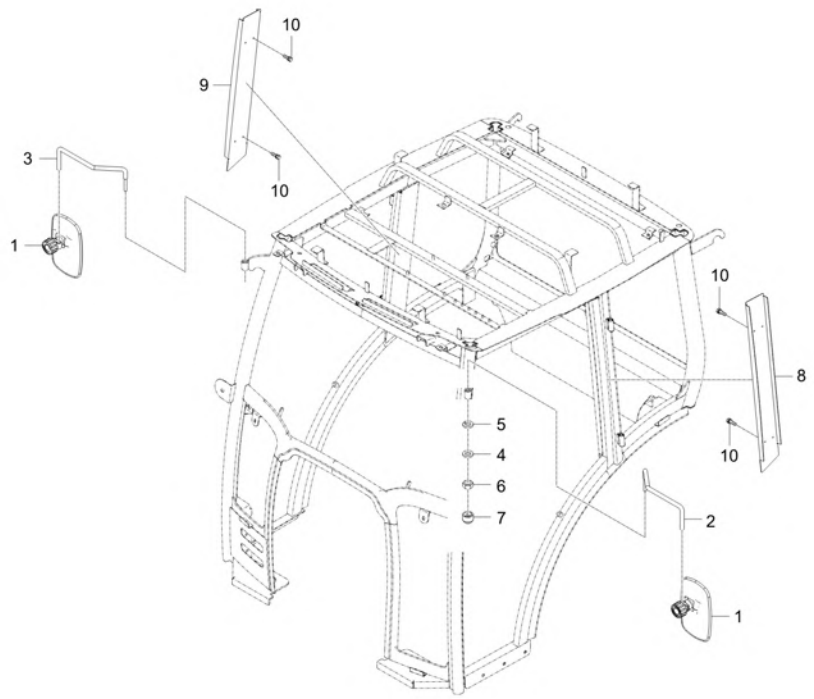

A : DK4510

No.	Part Number	Description	Qty A	Qty B	Qty C	Qty D	Qty E	I.C	Remark
1	T4818-83001	MIRROR REARVIEW v	2						
2	T2131-83011	SUPPORT REARVIEW MIRROR LH v	1						
3	T2131-83021	SUPPPORT REARVIEW MIRROR RH v	1						
4	04013-50100	PLAIN WASHER	2						M10
5	04512-50100	SPRING WASHER	2						M10
6	02114-50100	NUT	2						M10*P1.5
7	44366-4723-1	NUT,CAP	2						
8	T5715-86511	PILLA	1						
9	T5715-86521	PILLA	1						
10	T4625-55441	BOLT FLANGE	8						

----> Old replace New
<---- New replace Old
<-X-> Not interchangeable
<---> Interchangeable
<-O-> Interchangeable with another part(s)
* Please place an order assy(*)

https://tractormanualz.com/

TD200C-G870A

MOUNTING GROUP

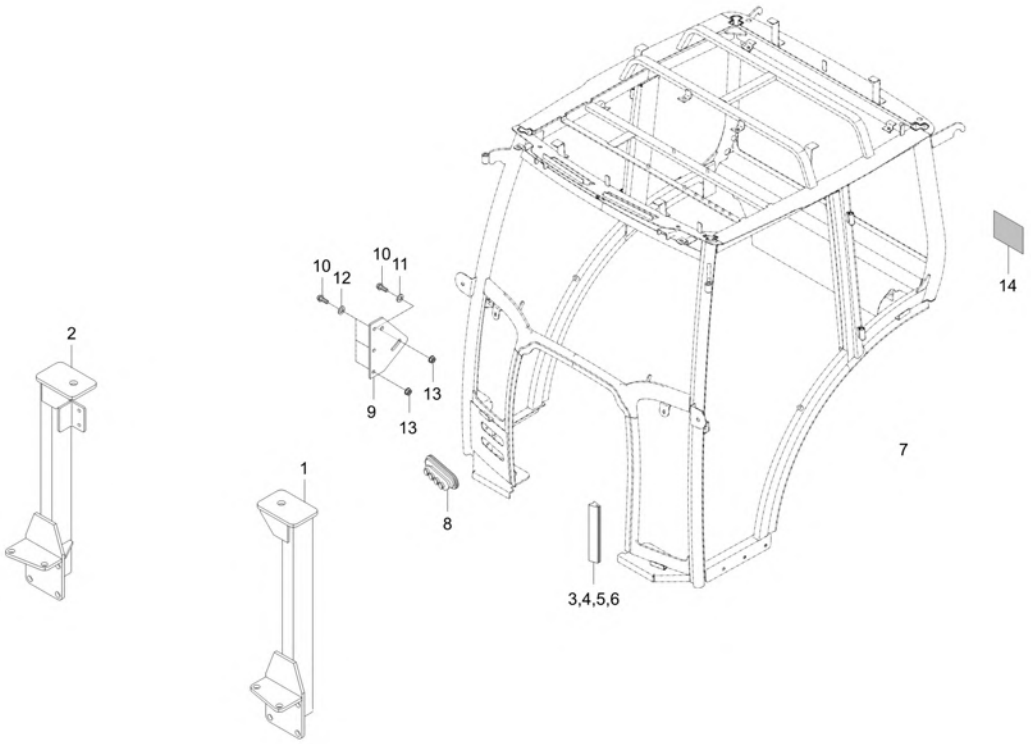

A : DK4510

No.	Part Number	Description	Qty A	Qty B	Qty C	Qty D	Qty E	I.C	Remark
1	T5715-83011	SUPPORT, CABIN ASSY LH	1						
1	T5715-83012	SUPPORT, CABIN ASSY LH	1					<------	
2	T5715-83022	SUPPORT, CABIN ASSY RH	1						
2	T5715-83023	SUPPORT, CABIN ASSY RH	1					<------	
3	T5715-83111	PAD, SEALING	2						
3	T5715-83112	PAD, SEALING FENDER	2					<------	
3	T5715-83113	PAD, SEALING	2					<----->	
4	T5715-83121	PAD, SEALING	1						
4	T5715-83122	PAD, SEALING REAR	1					<------	
4	T5715-83123	PAD, SEALING	1					<----->	
5	T5715-83131	PAD, SEALING	1						
5	T5715-83132	PAD, SEALING FRONT	1					<------	
5	T5715-83133	PAD, SEALING	1					<----->	
6	T5715-83141	PAD, SEALING	2						
6	T5715-83142	PAD, SEALING REAR EDGE	2					<------	
6	T5715-83143	PAD, SEALING	2					<----->	
7	01754-50816	BOLT, FLANGE	4						M8XP1.25
8	T5715-83241	JOYSTICK JAVARA	2						

----> Old replace New
<----> Interchangeable
* Please place an order assy(*)
<---- New replace Old
<-O-> Interchangeable with another part(s)
<-X-> Not interchangeable

https://tractormanualz.com/

TD200C-G870A

MOUNTING GROUP

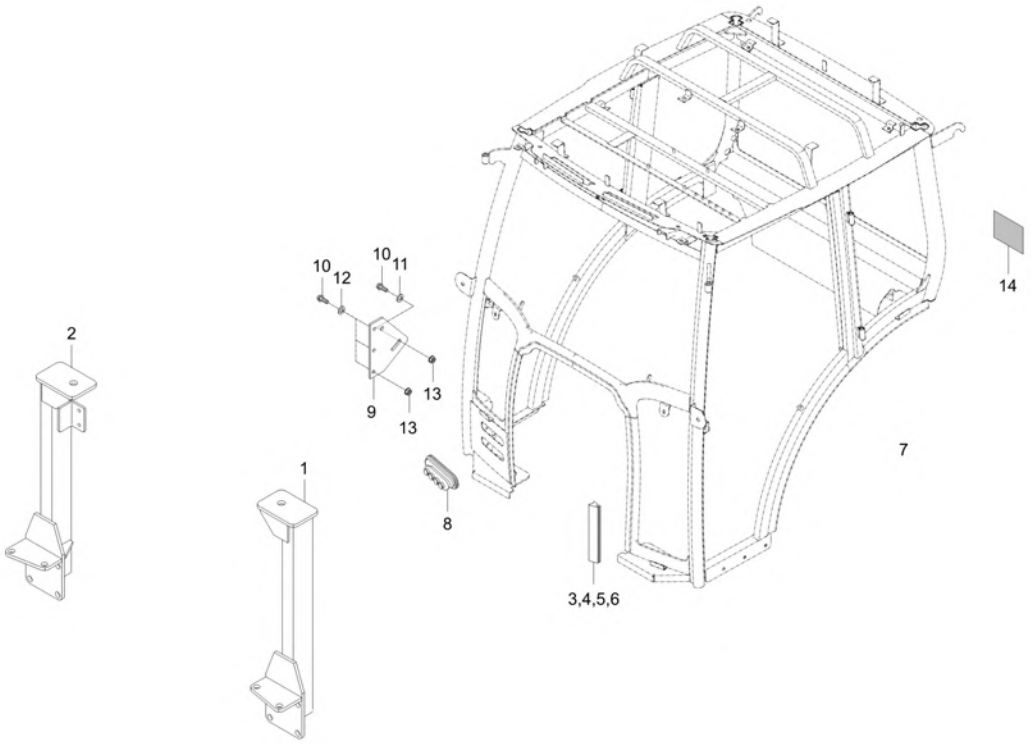

A : DK4510

No.	Part Number	Description	Qty A	Qty B	Qty C	Qty D	Qty E	I.C	Remark
9	T5715-83251	BRACKET, CONNECTING	1						
10	01133-51035	WASHER BOLT	2						M10X1.25
11	04015-50100	WASHER, PLAIN	1						M10
11	01133-51045	BOLT	1					<------	
12	04011-50100	PLAIN WASHER	3						M10
13	02176-50100	NUT v	3						M10XP1.25
14	TD26-0009A	LABEL, CABIN CERTIFICATE	1						
14	TD26-0967A	LABEL, CABIN CERTIFICATE-ISO 5700	1					<------	T0.5

----> Old replace New
<---> Interchangeable
* Please place an order assy(*)
<---- New replace Old
<-O-> Interchangeable with another part(s)
<-X-> Not interchangeable

https://tractormanualz.com/

TD2-G6H1002

JOYSTICK VALVE GROUP

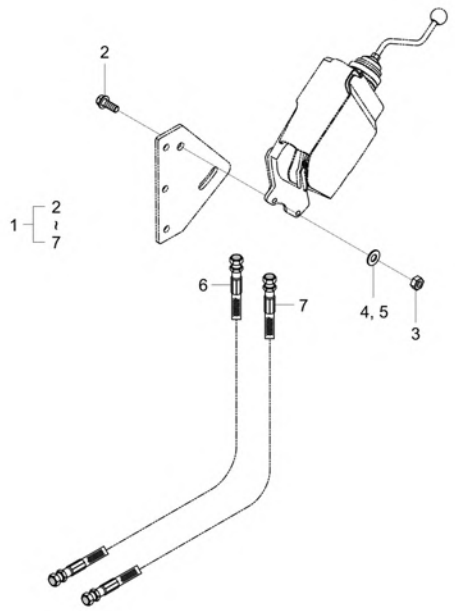

A : DK4510

No.	Part Number	Description	Qty A	Qty B	Qty C	Qty D	Qty E	I.C	Remark
1	TD26-0042A	ASSY HOSE, JOYSTICK v	1						
2	01133-51035	WASHER BOLT	2						M10X1.25
3	02176-50100	NUT v	2						M10XP1.25
4	04011-50100	PLAIN WASHER	1						M10
5	04015-50100	WASHER, PLAIN	1						M10
6	TD26-0035A	HOSE-1	2						454(3/4-16UNF)x4(3/
7	TD26-0036A	HOSE-2	2						454(3/4-16UNF)x4(3/

----> Old replace New
<---- New replace Old
<-X-> Not interchangeable
<---> Interchangeable
<-O-> Interchangeable with another part(s)
* Please place an order assy(*)

https://tractormanualz.com/

TD2-G6C2502

ROOF GROUP

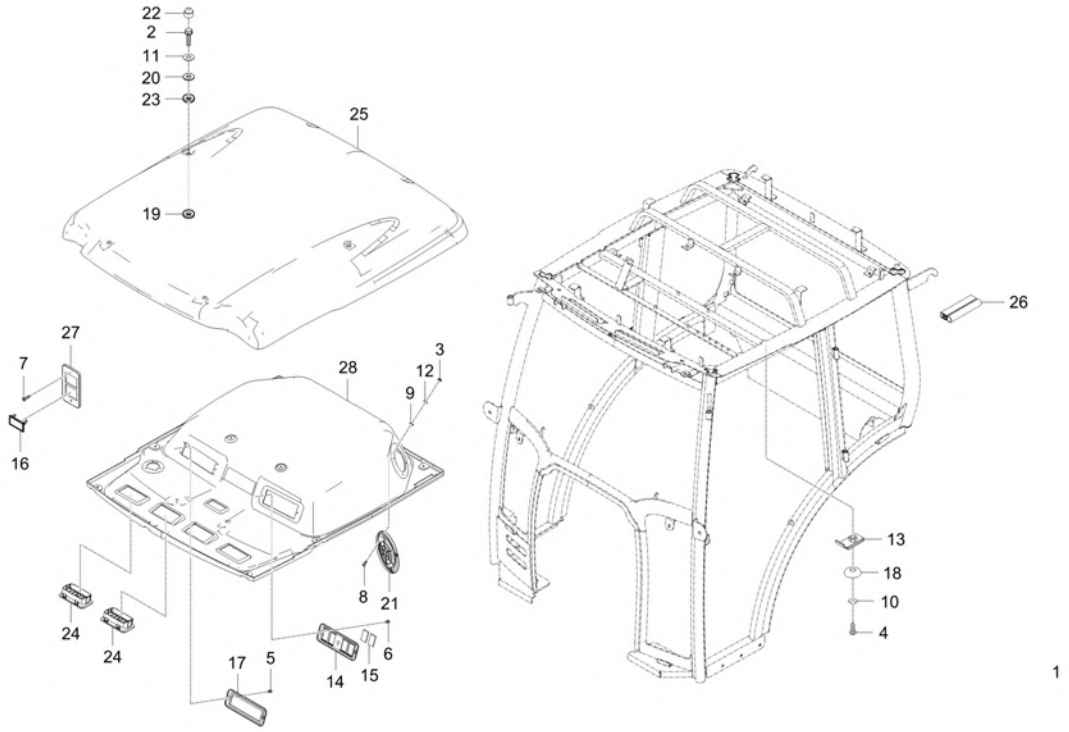

A : DK4510

No.	Part Number	Description	Qty A	Qty B	Qty C	Qty D	Qty E	I.C	Remark
1	01754-50816	BOLT, FLANGE	4						M8XP1.25
2	01754-50830	BOLT FLANGE	6						M8*P1.25
3	02054-50040	NUT	8						M4*P0.7
4	03014-50630	SCREW v	9						M6*P1.0
5	03054-50416	SCREW	2						M4*0.7
6	03054-50416	SCREW	2						M4*0.7
7	03054-50416	SCREW	2						M4*0.7
8	03054-50420	OB SCREW	8						
9	04013-50040	WASHER PLAIN	8						M4
10	04013-50060	PLAIN WASHER	9						M6
11	04013-50080	PLAIN WASHER	6						M8
12	04512-50040	WASHER, SPRING	8						M4
13	38245-2925-3	NUT, SPRING	9						
14	T2131-82511	PANNEL SWITCH	1						
15	T2131-82521	COVER	2						
16	T4025-68301	COVER	1						
17	T4145-82072	COVER STEREO	1						
18	T4145-82081	CAP RUBBER	9						

----> Old replace New <---- New replace Old <-X-> Not interchangeable
<---> Interchangeable <-O-> Interchangeable with another part(s)
* Please place an order assy(*)

https://tractormanualz.com/

TD2-G6C2502

ROOF GROUP

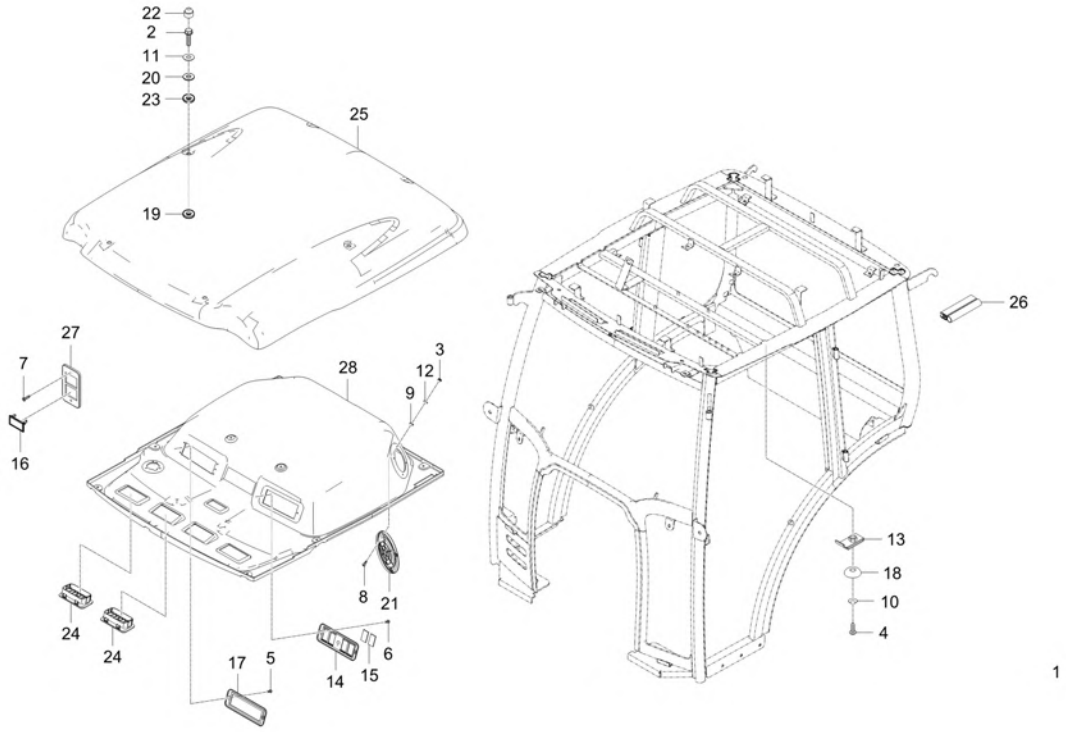

A : DK4510

No.	Part Number	Description	Qty A	Qty B	Qty C	Qty D	Qty E	I.C	Remark
19	T4520-88401	PACKING	6						
20	T4681-83431	COLLAR	6						
21	T4810-82352	GRILL SPEAKER	2						
22	T4815-93211	NUT CAP	6						
23	T4833-87141	WASHER PACKING v	6						
24	T4930-83082	GRILL AIR CONDITIONER	4						
25	T5715-87021	TRK - ROOF	1						
26	T5715-87031	RUBBER	1						
27	TC26-0383A	SWITCH - PANEL 2	1						
28	TD26-0044A	ASSY CEILING	1						
28	TD26-0044B	ASSY CEILING	1					<------	

----> Old replace New
<---- New replace Old
<-X-> Not interchangeable
<---> Interchangeable
<-O-> Interchangeable with another part(s)
* Please place an order assy(*)

https://tractormanualz.com/

TC2-G223002

WIPER(REAR) GROUP(OPTION)

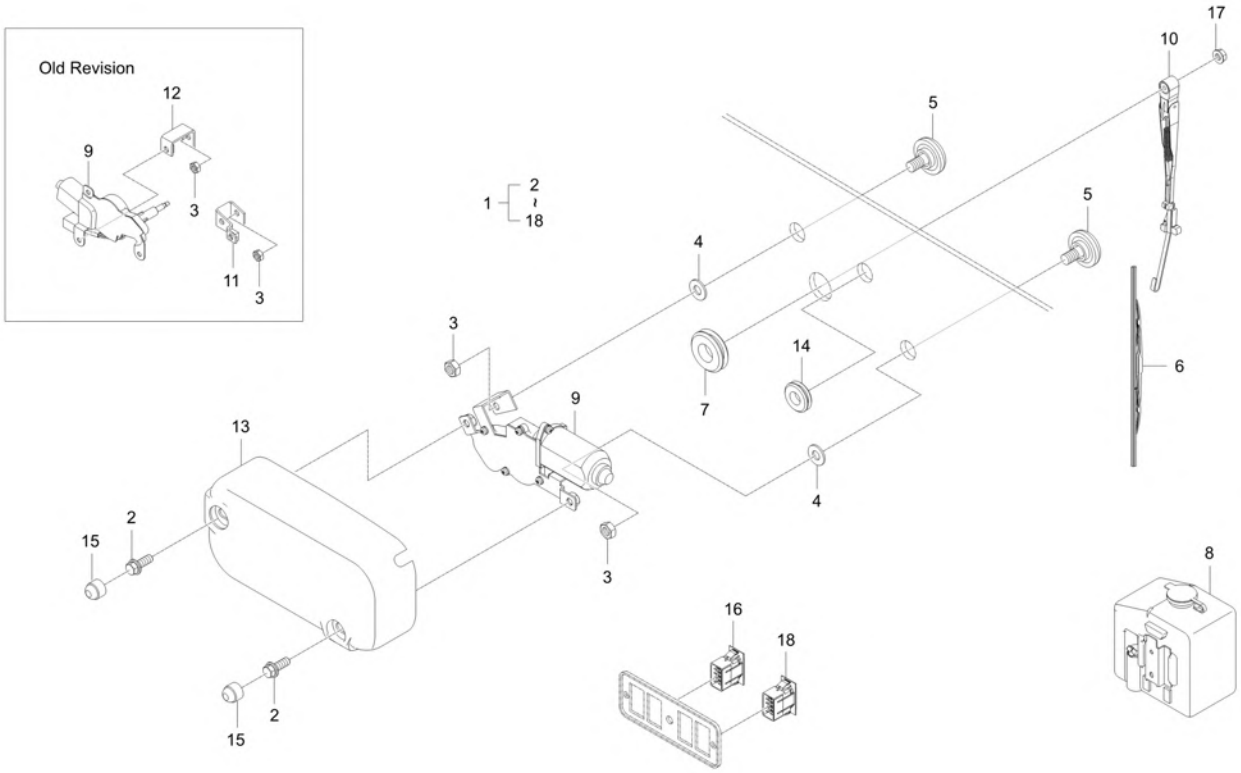

A : DK4510

No.	Part Number	Description	Qty A	Qty B	Qty C	Qty D	Qty E	I.C	Remark
1	T2131-88502	ASSY, REAR WIPER KIT	1						
1	T2131-88503	ASSY, REAR WIPER KIT	1					<------	
1	T2131-88504	ASSY, REAR WIPER KIT	1					<------	
1	T2131-88505	ASSY, REAR WIPER KIT	1					<------	
2	01123-50820	BOLT, WASHER v	3						M8XP1.25
3	02114-50080	NUT v	2						M8*P1.25
4	T4520-88401	PACKING	2						
5	T4620-81842	BOLT, CUSHION v	2						
6	T4686-82431	WIPER 13 IN	1						
7	T4815-78112	GROMMET v	1						
8	T4815-87181	WASHER TANK, REAR WIPER	1						
9	T4815-88211	WIPER MOTOR ASS`Y v	1						
9	TG15-0243A	ASSY MOTOR, WIPER	1					<------	
10	T4815-88221	ARM, WIPER	1						
11	T4815-89141	BRACKET A V dnr v	1						N
12	T4815-89151	BRACKET B	1						N
13	T4815-89162	COVER v	1						N
13	T4815-89163	COVER	1					<----->	T2.0

----> Old replace New
<---- New replace Old
<-X-> Not interchangeable
<---> Interchangeable
<-O-> Interchangeable with another part(s)
* Please place an order assy(*)

https://tractormanualz.com/

TC2-G223002

WIPER(REAR) GROUP(OPTION)

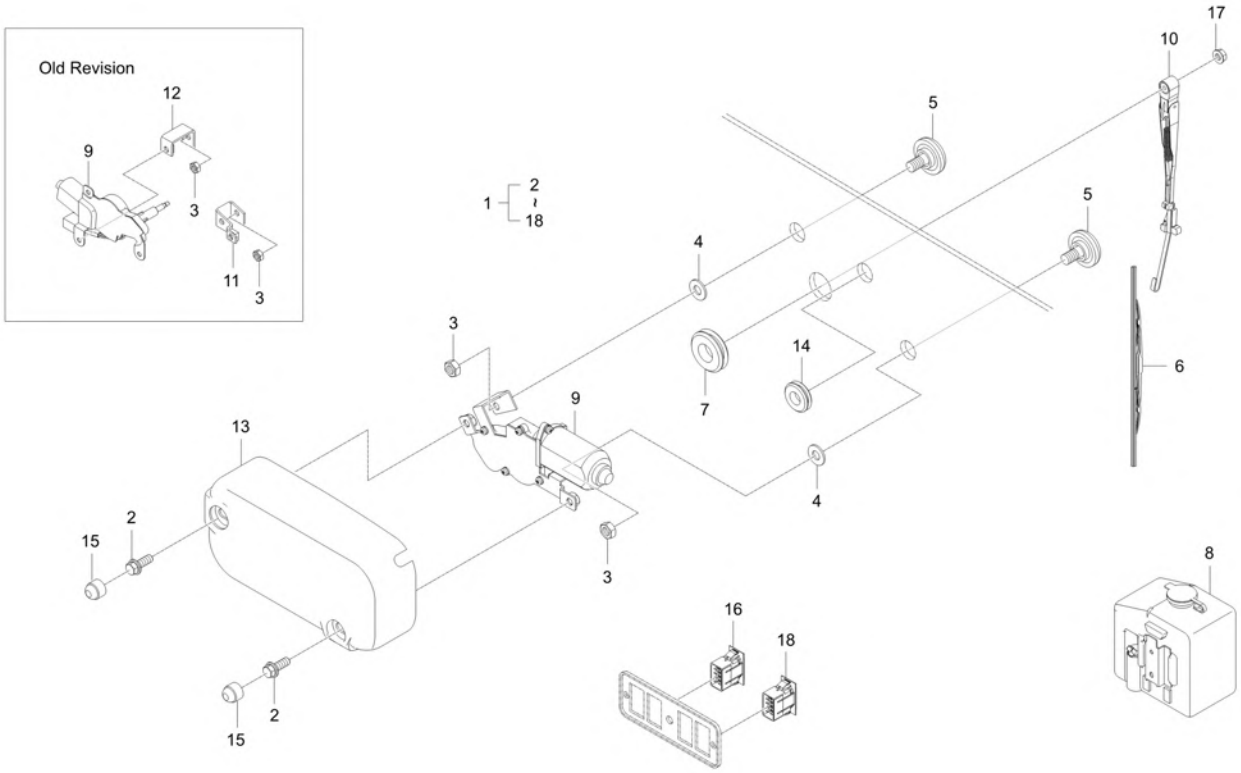

A : DK4510

No.	Part Number	Description	Qty A	Qty B	Qty C	Qty D	Qty E	I.C	Remark
14	T4815-89171	GROMMET v	1						N
15	T4815-93211	NUT CAP	2						
16	T4935-54212	SWITCH, WIPER, RR	1						
17	02761-50060	NUT, FLANGE	1						M6XP1.0
18	T4520-54222	SWITCH WORKING LAMP	1						

----> Old replace New
<----> Interchangeable
* Please place an order assy(*)
<---- New replace Old
<-O-> Interchangeable with another part(s)
<-X-> Not interchangeable

https://tractormanualz.com/

TC2-G6G4101

ARM REST GROUP(OPTION)

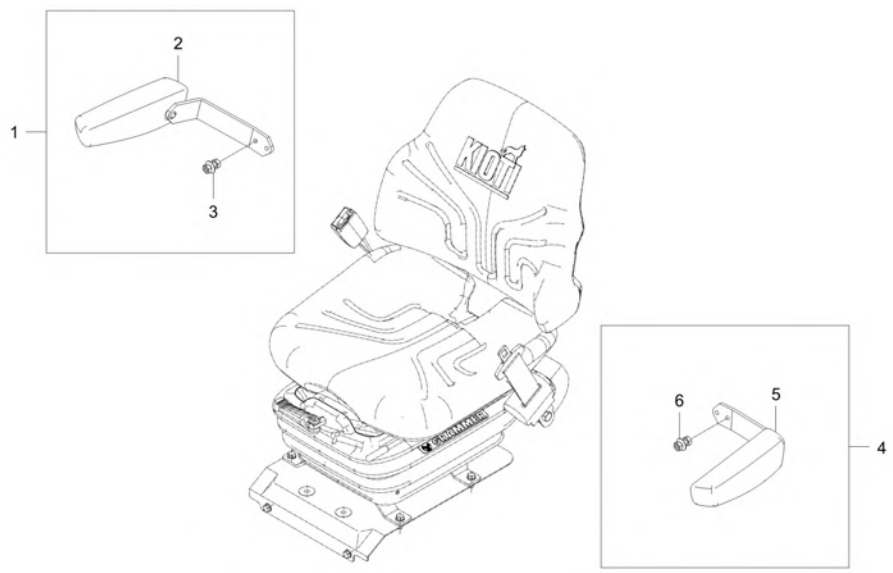

A : DK4510

No.	Part Number	Description	Qty A	Qty B	Qty C	Qty D	Qty E	I.C	Remark
1	TC26-A0113A	KIT, ARMREST-RH	1						
2	TC26-1782A	ARMREST-RH CPL	1						
3	TC26-1791A	FASTENER-ARMREST CPL	1						
4	TC26-A0114A	KIT, ARMREST-LH	1						
5	TC26-1783A	ARMREST-LH CPL	1						
6	TC26-1791A	FASTENER-ARMREST CPL	1						

----> Old replace New
<----> Interchangeable
* Please place an order assy(*)
<---- New replace Old
<-O-> Interchangeable with another part(s)
<-X-> Not interchangeable

https://tractormanualz.com/

TD2-G446003

HYDRAULIC BLOCK GROUP

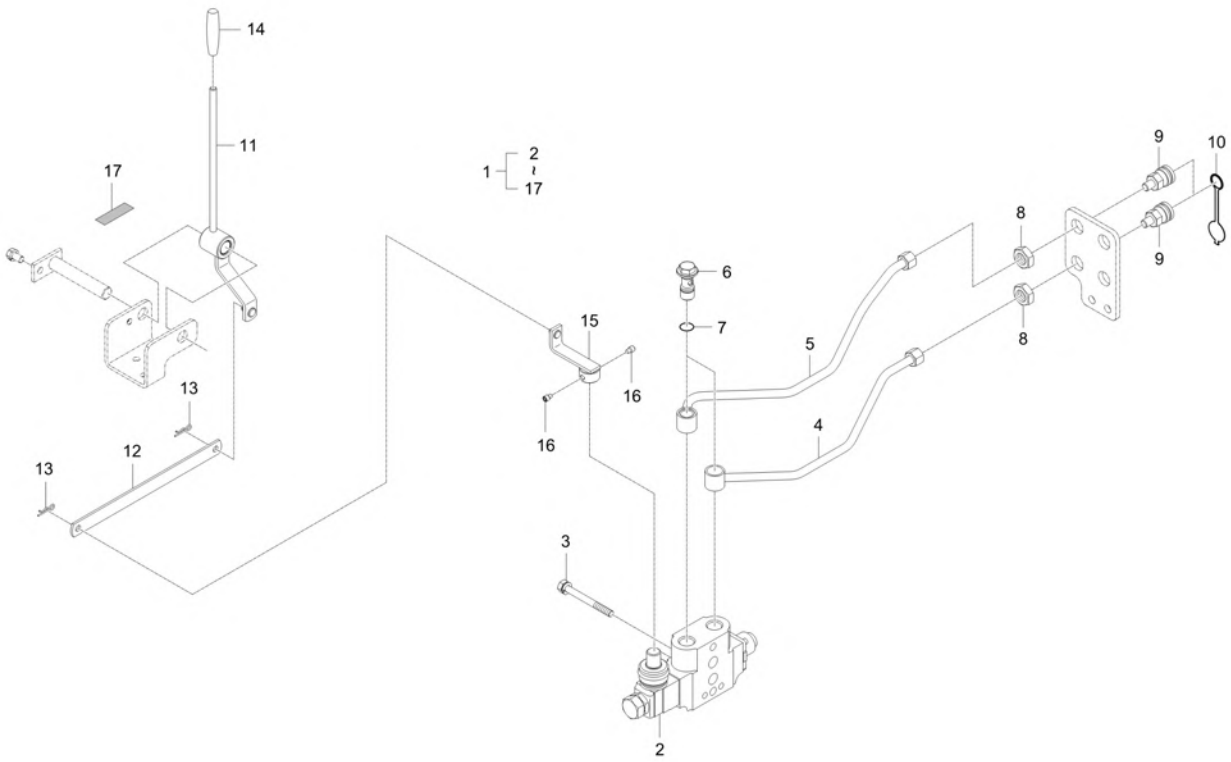

A : DK4510

No.	Part Number	Description	Qty A	Qty B	Qty C	Qty D	Qty E	I.C	Remark
1	T5715-A6042	Double Acting Valve KIT	1						
1	T5715-A6043	Double Acting Valve KIT	1					<----->	
1	T5715-A6044	Double Acting Valve KIT	1					<----->	
1	T5715-A6045	Double Acting Valve KIT	1					<----->	
2	T4157-39051	DOUBLE ACTING VALVE(DTSOP) v	1						
3	E6200-91092	BOLT WITH WASHER	2						HEX14,M10*1.25*125
4	T5710-35131	TUBE	1						
5	T5710-35142	TUBE	1						
6	T4620-37092	JOINT BOLT v	2						
6	TC24-0238A	BOLT, JOINT	2					<----->	
7	04816-00200	O RING	4						DIA19.8
7	04817-00200	O RING	4					<----->	DIA19.8
8	T4930-47071	NUT	2						M18XP1.5
9	T5710-30091	COUPLER,SELF-SEALING,AC,1-1-4 v	2						
9	TD24-0159A	COUPLER, QUICK	1					<----->	
10	T5520-90071	CAP, SOCKET	2						1/2
10	TF14-0123A	CAP, COUPLER SOCKET-1/2	2					<----->	1/2
11	T5710-54032	DOUBLEACTINGLEVER,RH	1						-

----> Old replace New
<---- New replace Old
<-X-> Not interchangeable
<---> Interchangeable
<-O-> Interchangeable with another part(s)
* Please place an order assy(*)

https://tractormanualz.com/

TD2-G446003

HYDRAULIC BLOCK GROUP

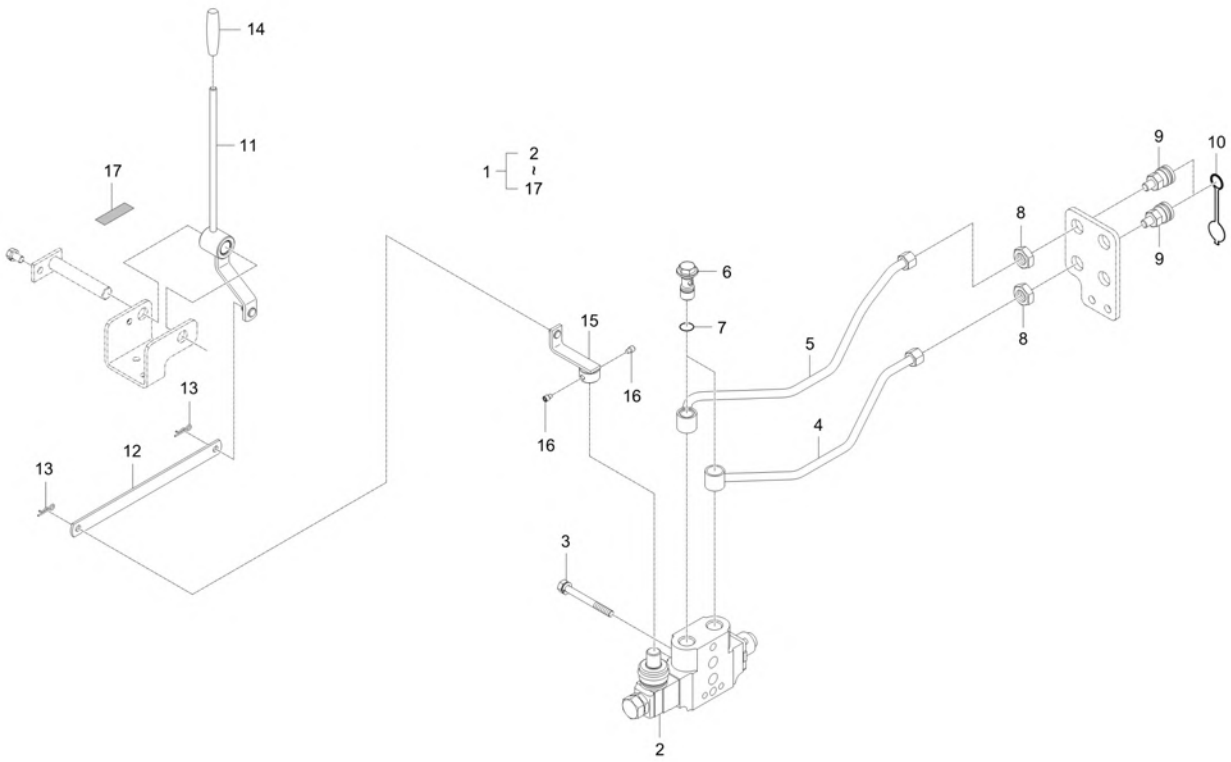

A : DK4510

No.	Part Number	Description	Qty A	Qty B	Qty C	Qty D	Qty E	I.C	Remark
12	T5710-54051	ROD, DOUBLE ACTING	1						T3.0
13	05525-50800	PIN, SNAP	2						DIA8
14	T2185-71241	GRIP, DARK BLUE	1						
15	T5710-59081	LEVER, DOUBLE ACTING	1						N
16	T2610-39572	SCREW, SET	2						M8*P1.25
17	T4835-51232	LABEL,SINGLE DOUBLE ACTING LEVER	1						

----> Old replace New
<----> Interchangeable
* Please place an order assy(*)
<---- New replace Old
<-O-> Interchangeable with another part(s)
<-X-> Not interchangeable

https://tractormanualz.com/

TD2-G446004

HYDRAULIC BLOCK GROUP

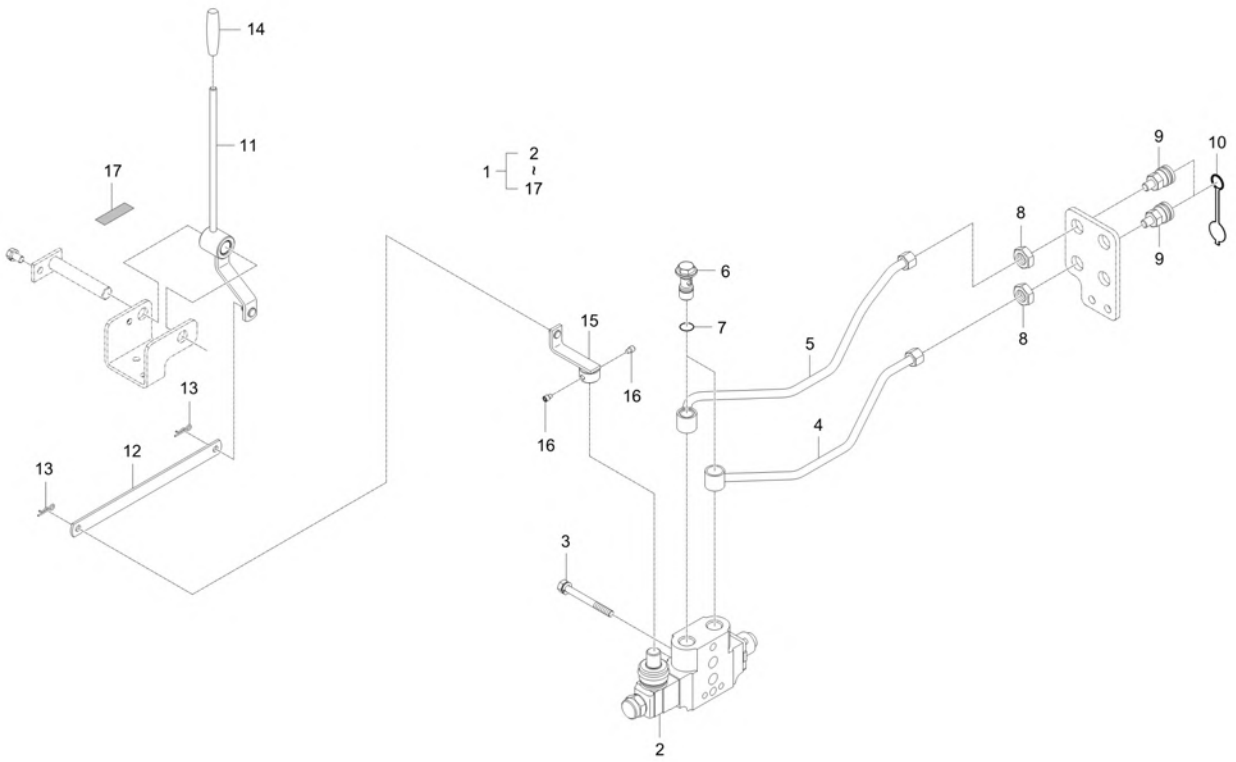

A : DK4510

No.	Part Number	Description	Qty A	Qty B	Qty C	Qty D	Qty E	I.C	Remark
1	T5715-A6052	DETENT DOUBLE V/V	1						
1	T5715-A6053	DETENT DOUBLE V/V	1					<----->	
1	T5715-A6054	DETENT DOUBLE V/V	1					<----->	
1	T5715-A6055	DETENT DOUBLE V/V	1					<----->	
2	T5710-39031	DETENTDOUBLEV/V	1						
3	E6200-91092	BOLT WITH WASHER	2						HEX14,M10*1.25*125
4	T5710-35131	TUBE	1						
5	T5710-35142	TUBE	1						
6	T4620-37092	JOINT BOLT v	2						
6	TC24-0238A	BOLT, JOINT	2					<----->	
7	04816-00200	O RING	4						DIA19.8
7	04817-00200	O RING	4					<----->	DIA19.8
8	T4930-47071	NUT	2						M18XP1.5
9	T5710-30091	COUPLER,SELF-SEALING,AC,1-1-4 v	2						
9	TD24-0159A	COUPLER, QUICK	1					<----->	
10	T5520-90071	CAP, SOCKET	2						1/2
10	TF14-0123A	CAP, COUPLER SOCKET-1/2	2					<----->	1/2
11	T5710-54032	DOUBLEACTINGLEVER,RH	1						-

----> Old replace New
<---- New replace Old
<-X-> Not interchangeable
<---> Interchangeable
<-O-> Interchangeable with another part(s)
* Please place an order assy(*)

https://tractormanualz.com/

TD2-G446004

HYDRAULIC BLOCK GROUP

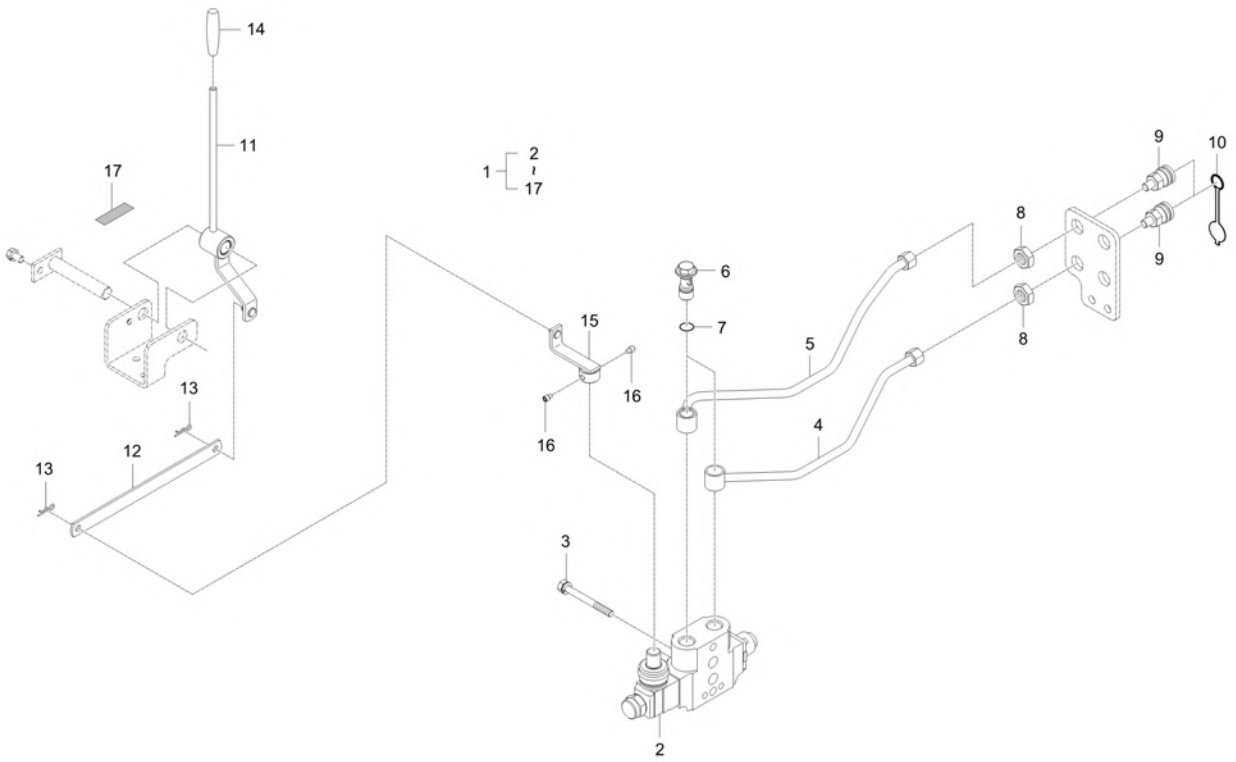

A : DK4510

No.	Part Number	Description	Qty A	Qty B	Qty C	Qty D	Qty E	I.C	Remark
12	T5710-54051	ROD, DOUBLE ACTING	1						T3.0
13	05525-50800	PIN, SNAP	2						DIA8
14	T2185-71241	GRIP, DARK BLUE	1						
15	T5710-59081	LEVER, DOUBLE ACTING	1						N
16	T2610-39572	SCREW, SET	2						M8*P1.25
17	T4835-51232	LABEL,SINGLE DOUBLE ACTING LEVER	1						

----> Old replace New
<----> Interchangeable
* Please place an order assy(*)
<---- New replace Old
<-O-> Interchangeable with another part(s)
<-X-> Not interchangeable

https://tractormanualz.com/

TD2-G523002 REAR WORKING LAMP GROUP

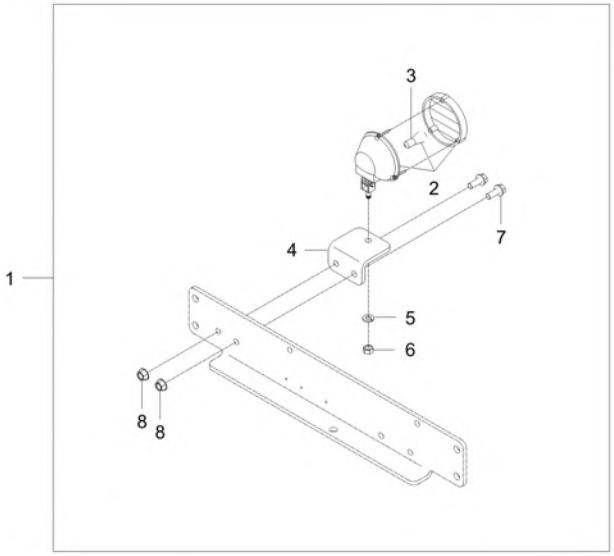

A : DK4510

No.	Part Number	Description	Qty A	Qty B	Qty C	Qty D	Qty E	I.C	Remark
1	T5758-A7021	REAR WORKING LIGHT KIT	1						
2	T2350-46612	WORKING LIGHT ASSY	1						
3	T4620-69272	BULB (12V 21W)	1						12V21W (S25S)
4	T5710-55281	BRACKET	1						T6.0
5	04512-50080	SPRING WASHER	1						M08
6	02156-50080	NUT v	1						M8XP1.25
7	01754-50820	BOLT, FLANGE	2						M8XP1.25
8	02763-50080	FLANGE NUT	2						M8XP1.25

----> Old replace New
<---- New replace Old
<-X-> Not interchangeable
<---> Interchangeable
<-O-> Interchangeable with another part(s)
* Please place an order assy(*)

https://tractormanualz.com/

TD2-G525503

7 PIN SOCKET GROUP

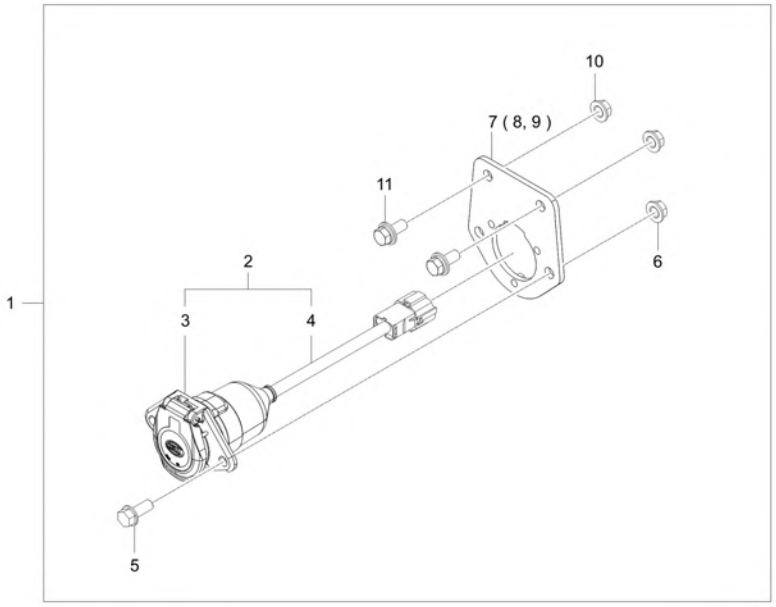

A : DK4510

No.	Part Number	Description	Qty A	Qty B	Qty C	Qty D	Qty E	I.C	Remark
1	T5755-A7062	7 Pin Socket Kit	1						
2	T5535-69931	7 PIN SOCKET ASS'Y SAE v	1						
3	T5535-69941	7 PIN SOCKET(SAE)	1						HELLA 008.085-00
4	T4935-69971	HARNESS ASSEMBLY	1						
5	01754-50820	BOLT, FLANGE	2						M8XP1.25
6	02751-50080	FLANGE NUT 8MMX1.25P	2						M8XP1.25
7	TD26-0006A	BRACKET, 7 PIN SOCKET v	1						
8	TD26-0007A	PLATE	1						T4.5
9	02054-50050	NUT v	3						M5*P1.0
10	02751-50080	FLANGE NUT 8MMX1.25P	2						M8XP1.25
11	01125-50820	BOLT, WASHER	2						M8XP1.25

----> Old replace New <---- New replace Old <-X-> Not interchangeable
<---> Interchangeable <-O-> Interchangeable with another part(s)
* Please place an order assy(*)

https://tractormanualz.com/

TD2-G526501 FRONT WORKING LAMP GROUP(OPTION)

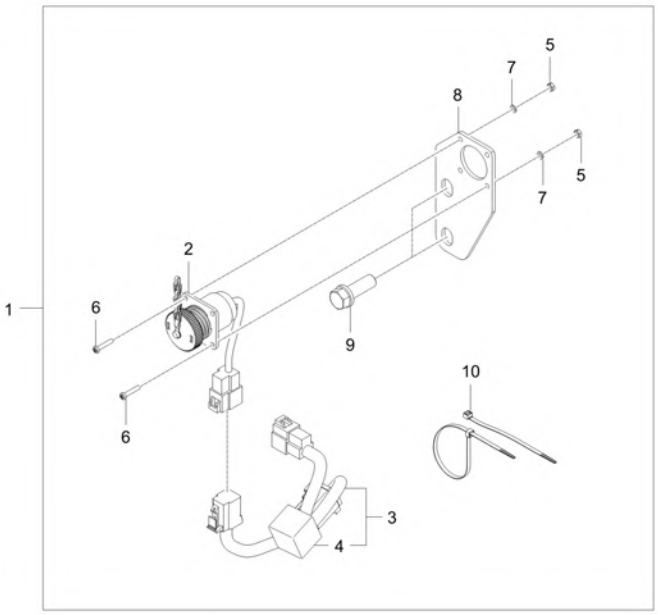

A : DK4510

No.	Part Number	Description	Qty A	Qty B	Qty C	Qty D	Qty E	I.C	Remark
1	T5755-A7052	3 Pin Socket Kit	1						
2	T5310-69031	3 PIN SOCKET ASSY v	1						
3	T5755-69342	WIRE,CONNECTION	1						
4	T5710-69941	RELAY, 5P v	1						
5	02054-50030	NUT	4						
6	03054-50316	BOLT SCREW	4						
7	04512-50030	WASHER, SPRING	4						
8	T5755-77511	BRACKET	1						T3.0
9	01123-51030	BOLT	2						M10*1.5
10	T2185-82551	CABLE TIE, BLACK / 300	1						L290

----> Old replace New
<----> Interchangeable
* Please place an order assy(*)
<---- New replace Old
<-O-> Interchangeable with another part(s)
<-X-> Not interchangeable

https://tractormanualz.com/

TD2-G527002

POWER SOCKET GROUP

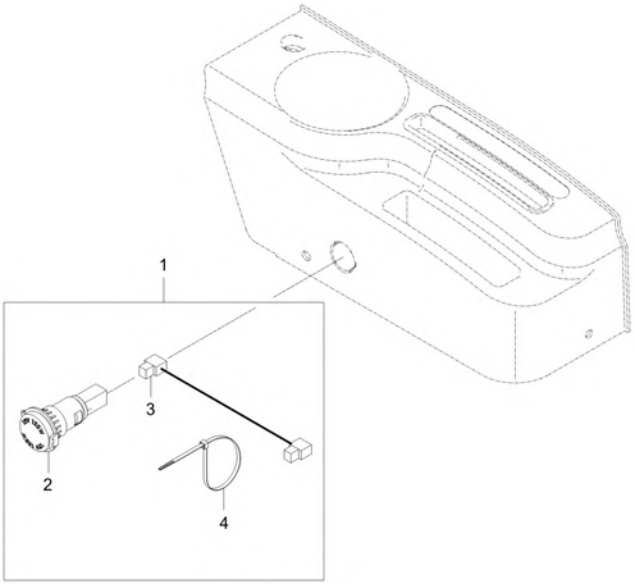

A : DK4510

No.	Part Number	Description	Qty A	Qty B	Qty C	Qty D	Qty E	I.C	Remark
1	T5758-A7041	Power Socket Kit	1						
2	T4935-92502	POWER OUTLET ASS'Y(12V)	1						
3	T5710-69471	CONNECTION WIRE	1						
4	P5370-82551	BAND, CABLE	1						

----> Old replace New
<---> Interchangeable
* Please place an order assy(*)
<---- New replace Old
<-O-> Interchangeable with another part(s)
<-X-> Not interchangeable

https://tractormanualz.com/

TD2-G681005

LOWER LINK GROUP

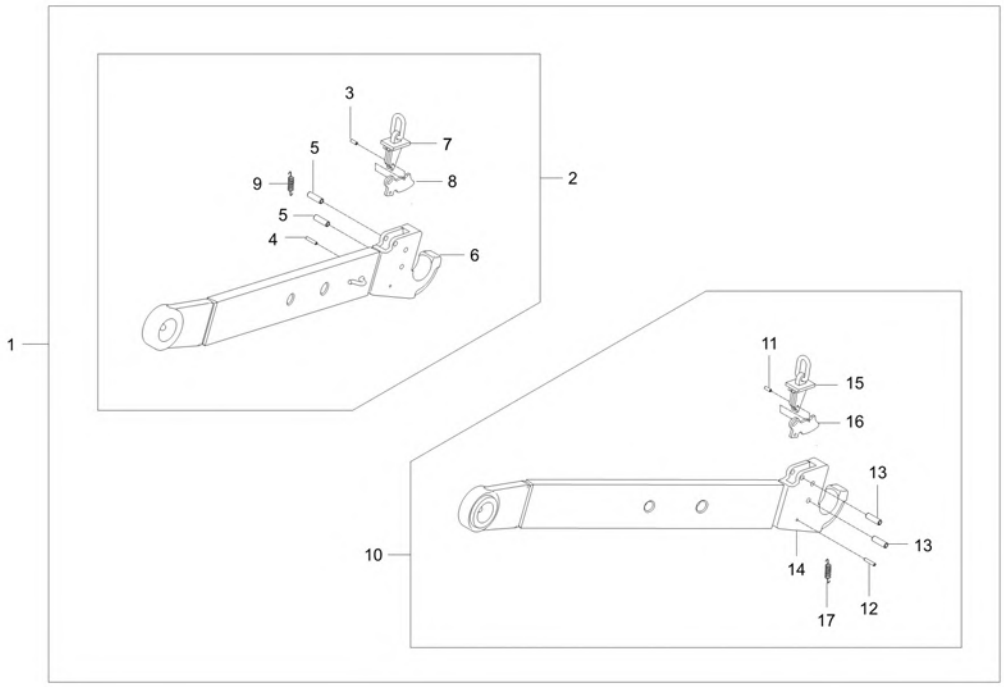

A : DK4510

No.	Part Number	Description	Qty A	Qty B	Qty C	Qty D	Qty E	I.C	Remark
1	T5715-A5021	CATEGORY KIT	1						
1	T5715-A5022		1					<------	
2	T5710-54642	LWR LINK ASSY, RH	1						
2	T5710-54643		1					<------	
3	05411-00412	OB PIN,SPRING	1						
4	05411-00422	PIN,SPRING	1						DIA4*22
5	05411-00828	PIN, SPRING	2						
6	T4624-93011004	HOUSING	1						
7	T4624-93011006	ASSY LEVER,OPERATION	1						
8	T4624-93011007	GUIDE PIN	1						
9	T4624-93011008	SPRING	1						
10	T5710-54632	ASSY,LOWER LINK LH	1						
10	T5710-54633		1					<------	
11	05411-00412	OB PIN,SPRING	1						
12	05411-00422	PIN,SPRING	1						DIA4*22
13	05411-00828	PIN, SPRING	2						
14	T4624-93011004	HOUSING	1						
15	T4624-93011006	ASSY LEVER,OPERATION	1						

----> Old replace New
<---- New replace Old
<-X-> Not interchangeable
<---> Interchangeable
<-O-> Interchangeable with another part(s)
* Please place an order assy(*)

https://tractormanualz.com/

TD2-G681005

LOWER LINK GROUP

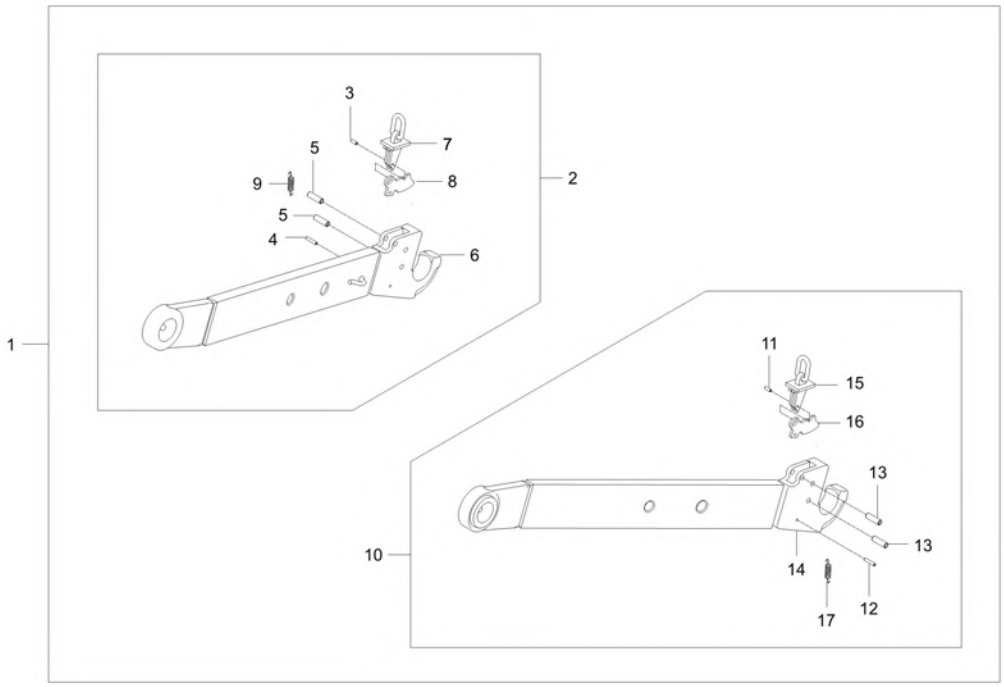

A : DK4510

No.	Part Number	Description	Qty A	Qty B	Qty C	Qty D	Qty E	I.C	Remark
16	T4624-93011007	GUIDE PIN	1						
17	T4624-93011008	SPRING	1						

----> Old replace New
<---- New replace Old
<-X-> Not interchangeable
<---> Interchangeable
<-O-> Interchangeable with another part(s)
* Please place an order assy(*)

https://tractormanualz.com/

TD2-G632001

FRONT ROPS GROUP(OPTION)

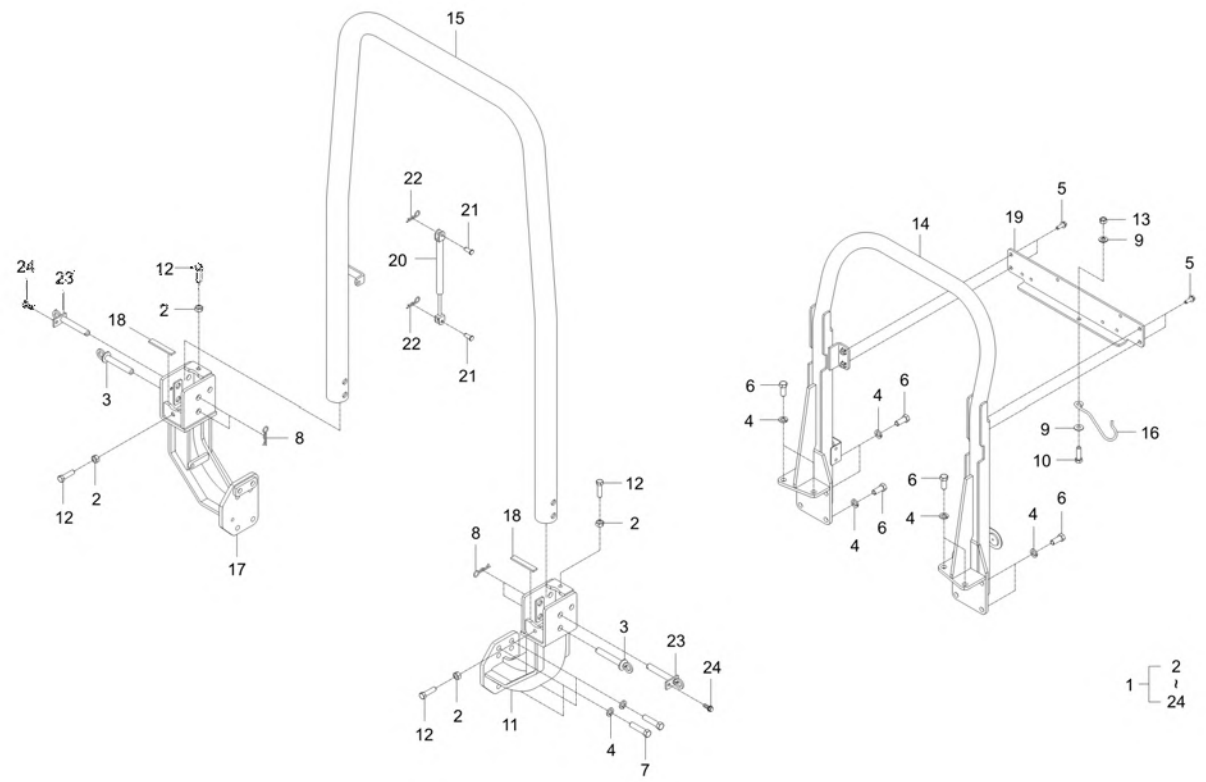

A : DK4510

No.	Part Number	Description	Qty A	Qty B	Qty C	Qty D	Qty E	I.C	Remark
1	TD26-A0018C	FRONT ROPS KIT	1						
2	02114-50120	NUT	4						M12*P1.75
3	T5738-55291	PIN	2						N
4	04512-50140	SPRING WASHER	18						
5	01125-51025	BOLT	4						M10
6	T2230-85242	BOLT	10						M14*2.0*32
7	01173-51445	BOLT	8						M14*P1.5*45
8	05515-51600	PIN, SNAP	2						
9	04013-50100	PLAIN WASHER	2						M10
10	01774-51030	FLANGE BOLT	1						
11	T5738-55232	ROPS SUPPORT, LH	1						-
12	T5710-55311TP	BOLT	4						M12XP1.75
13	41182-5151-1	NUT, REMOVE CHECK	1						DIA10
14	T5738-55262	SUPPORT, REAR	1						-
15	T5738-55202	ROPS ASSY	1						-
16	T5410-48081	CLIP,TOP LINK	1						
17	T5738-55253	SUPPORT ASSY, ROPS RH,FR	1						-
18	TD26-0121A	RUBBER, CUSHION	2						T4.0

----> Old replace New <---- New replace Old <-X-> Not interchangeable
<---> Interchangeable <-O-> Interchangeable with another part(s)
* Please place an order assy(*)

https://tractormanualz.com/

TD2-G632001

FRONT ROPS GROUP(OPTION)

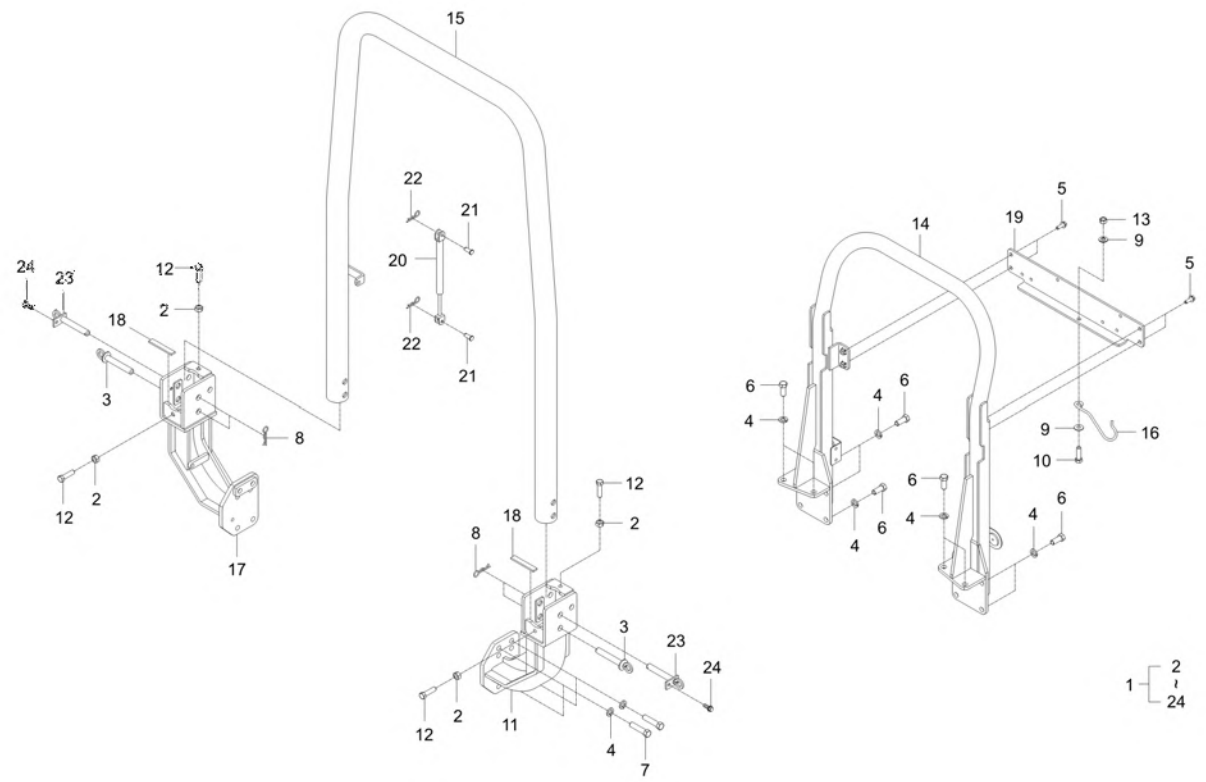

A : DK4510

No.	Part Number	Description	Qty A	Qty B	Qty C	Qty D	Qty E	I.C	Remark
19	T5710-55274	SUPPORT	1						T6.0
20	TD26-0759A	CYLINDER, AIR	1						
21	05122-51025	JOINT PIN	2						DIA10*25
22	05515-51000	Split Pin	2						DIA10
23	TB16-0127B	FIXED PIN	2						
24	01123-50816	Hex Head Cap Screw	2						M8XP1.25

----> Old replace New
<----> Interchangeable
* Please place an order assy(*)
<---- New replace Old
<-O-> Interchangeable with another part(s)
<-X-> Not interchangeable

https://tractormanualz.com/

TD200C-G880A

Interior material group(option)

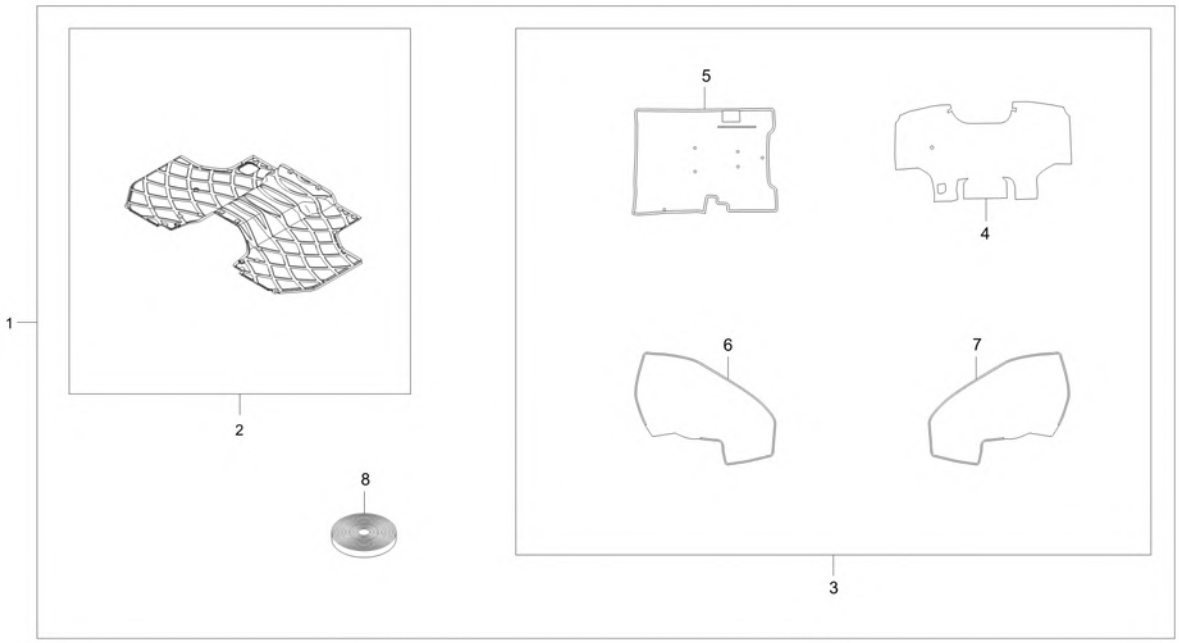

A : DK4510

No.	Part Number	Description	Qty A	Qty B	Qty C	Qty D	Qty E	I.C	Remark
1	T5715-A8812	KIT, INTERIOR TRIM	1						
1	T5715-A8813	KIT, INTERIOR TRIM	1					<------	
2	T5715-51822	MAT	1						-
3	T5715-80002	interior material ASSY	1						
4	T5715-88011	SOUND ABSORPTION PAD	1						T12
5	T5715-88021	REZA COVER	1						-
6	T5715-88031	REZA COVER	1						-
7	T5715-88041	REZA COVER	1						-
8	TD26-0046A	VELCRO, MALE-4M	1						

----> Old replace New
<---- New replace Old
<-X-> Not interchangeable
<---> Interchangeable
<-O-> Interchangeable with another part(s)
* Please place an order assy(*)

https://tractormanualz.com/

CK30C-T2200A

CD PLAYER GROUP(OPTION)

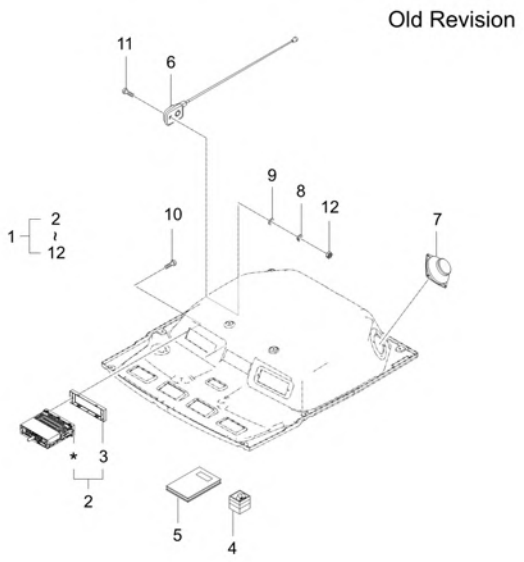

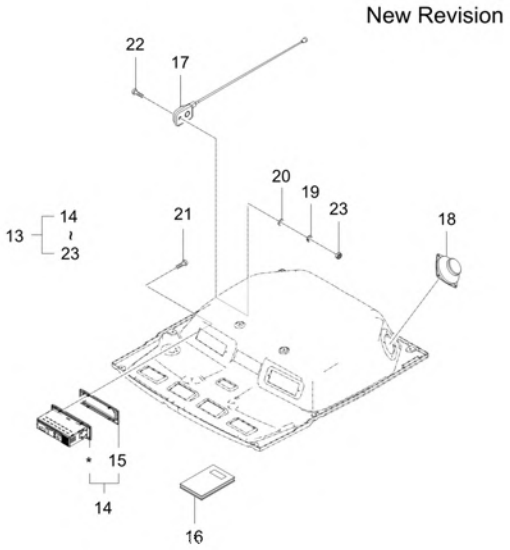

A : DK4510

No.	Part Number	Description	Qty A	Qty B	Qty C	Qty D	Qty E	I.C	Remark
1	T2131-55451	KIT, STEREO	1						
1	T2131-55452	KIT, STEREO	1					<----->	
2	T5270-55411	ASSY,STEREO dnr v	1						
2	TG15-0046A	ASSY STEREO v	1					<----->	
3	T5270-54501	COVER obs v	1						
3	TG15-0048A	BEZEL	1					<--X-->	
4	T5270-55171	STEREO ACCESSORIES	1						
4	T5270-55172	STEREO ACCESSORIES	1					<----->	
5	T5270-55491	stereo manual	1						
5	TG15-0047A	MANUAL, STEREO	1					<----->	
6	T4810-82421	ASSY ANTENNA	1						
7	T4810-82341	ASSY SPEAKER	2						
8	04512-50060	WASHER, SPRING	1						M6
9	04013-50060	PLAIN WASHER	1						M6
10	03024-50420	SCREW WASHER v	2						
11	03014-50625	SCREW v	1						
12	02114-50060	NUT dnr v	1						
13	TB35-A0005A	BLUETOOTH PLAYER OPTION KIT ASSY	1						

----> Old replace New
<---- New replace Old
<-X-> Not interchangeable
<---> Interchangeable
<-O-> Interchangeable with another part(s)
* Please place an order assy(*)

https://tractormanualz.com/

CK30C-T2200A

CD PLAYER GROUP(OPTION)

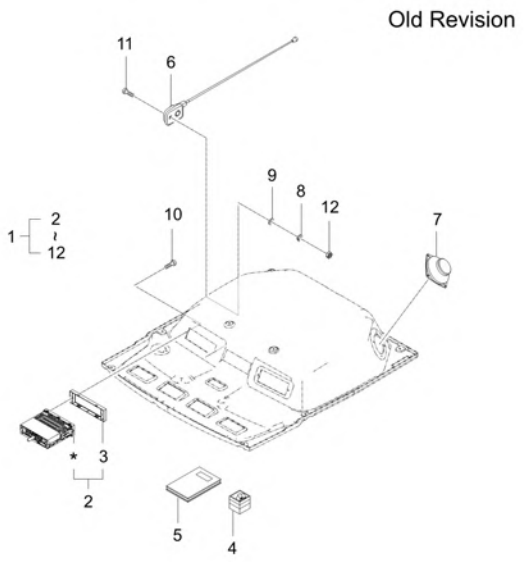

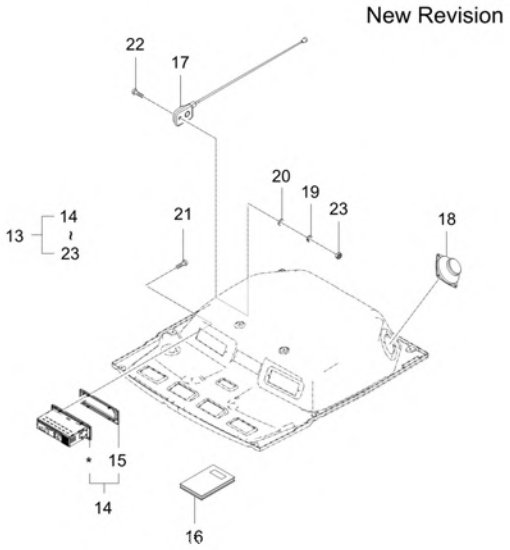

A : DK4510

No.	Part Number	Description	Qty A	Qty B	Qty C	Qty D	Qty E	I.C	Remark
14	T5290-69942	ASSY, STEREO v	1						
15	TF15-0001A	BEZEL	1						
16	TF15-0002C	MANUAL, STEREO	1						
17	T4810-82421	ASSY ANTENNA	1						
18	T4810-82341	ASSY SPEAKER	2						
19	04512-50060	WASHER, SPRING	1						M6
20	04013-50060	PLAIN WASHER	1						M6
21	03024-50420	SCREW WASHER v	2						
22	03014-50625	SCREW v	1						
23	02056-50060	NUT	1						M6*P1.0

----> Old replace New
<---> Interchangeable
* Please place an order assy(*)
<---- New replace Old
<-O-> Interchangeable with another part(s)
<-X-> Not interchangeable

https://tractormanualz.com/

TD2-G6G0701

SUNSHADE GROUP

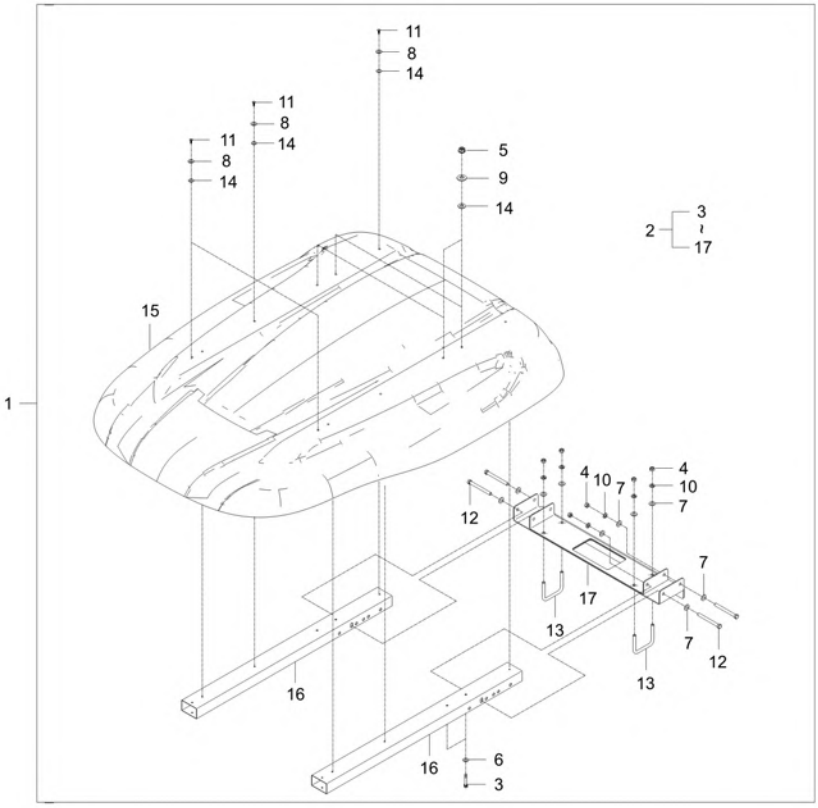

A : DK4510

No.	Part Number	Description	Qty A	Qty B	Qty C	Qty D	Qty E	I.C	Remark
1	T5710-A5083	SUN VISOR KIT ASSY	1						
2	T5710-59603	ASSY SUNSHADE dnr v	1						
3	01023-50665	BOLT, WASHER	4						MEX10*76
4	02014-50100	NUT	8						M10XP1.5
5	02751-50060	NUT, FLANGE	4						M6XP1.0
6	04013-50060	PLAIN WASHER	4						M6
7	04013-50100	PLAIN WASHER	12						M10
8	04015-50050	WASHER, PLAIN	8						M5
9	04015-50060	WASHER, PLAIN	4						M6
10	04512-50100	SPRING WASHER	8						M10
11	38240-1883-1	TAPPING SCREW dnr v	8						M4X16
12	T2185-85101004	BOLT dnr v	4						M10XP1.5
13	T2185-85101005	U BOLT v	2						M10XP1.5
14	T4682-65301	WASHER 2	12						
15	T5710-59612	SUNSHADE	1						T5.0
16	T5710-59622	PIPE	2						75x45xT1.6
17	T5710-59633	ASSY, SUPPORT	1						

----> Old replace New
<----> Interchangeable
* Please place an order assy(*)
<---- New replace Old
<-O-> Interchangeable with another part(s)
<-X-> Not interchangeable

https://tractormanualz.com/

TD2-G6A3001

REAR WEIGHT GROUP

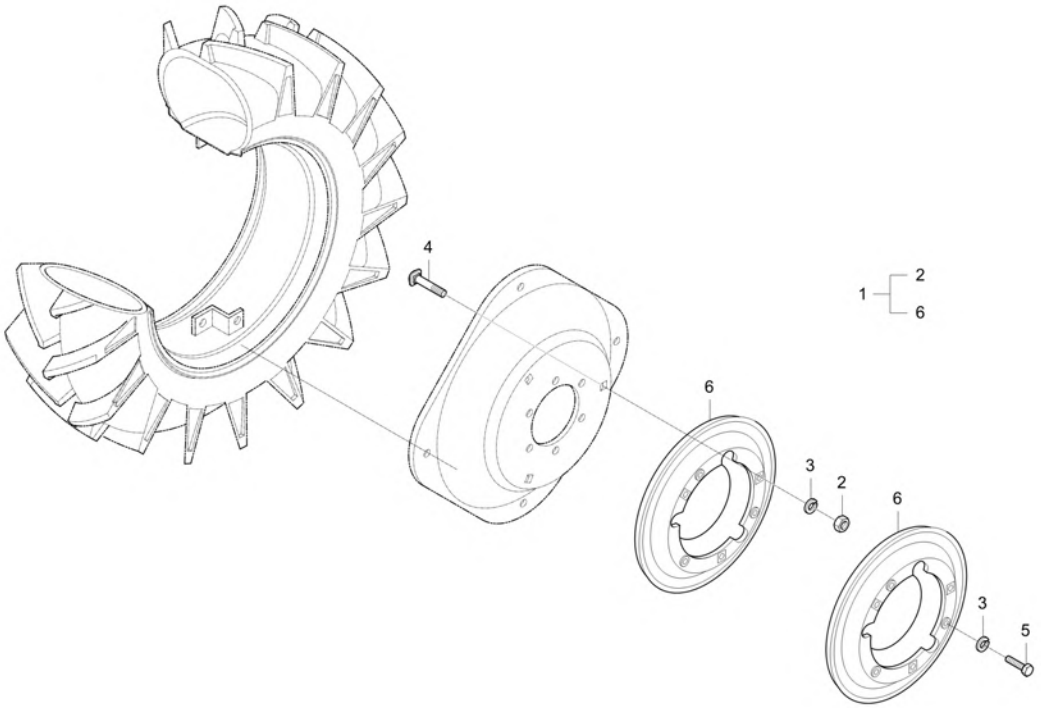

A : DK4510

No.	Part Number	Description	Qty A	Qty B	Qty C	Qty D	Qty E	I.C	Remark
1	T5710-A03000601	WEIGHT ASSY dnr v	1						
1	T5710-A03000602	ASSY WEIGHT-RR	1					<------	
2	02076-50160	NUT	12						
3	04512-50160	WASHER, SPRING	12						M16
4	99415-1502-2	BOLT	6						
5	99415-1503-1	BOLT, WEIGHT	6						
6	T4240-27743	WEIGHT	4						
6	T4240-27744	WEIGHT, WHEEL	4					<------	

----> Old replace New
<----> Interchangeable
* Please place an order assy(*)
<---- New replace Old
<-O-> Interchangeable with another part(s)
<-X-> Not interchangeable

https://tractormanualz.com/

TD2-G446001

HYDRAULIC BLOCK GROUP

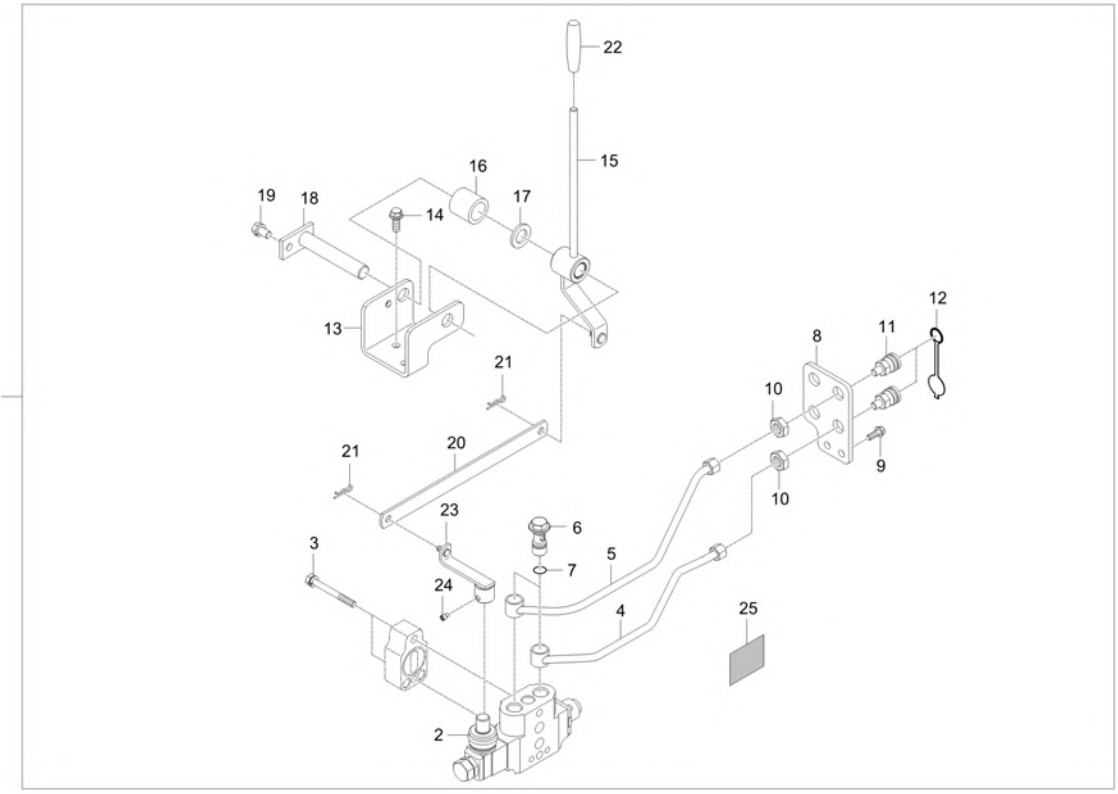

A : DK4510

No.	Part Number	Description	Qty A	Qty B	Qty C	Qty D	Qty E	I.C	Remark
1	T5715-A6023	Double Acting Valve KIT	1						
1	T5715-A6025	Double Acting Valve KIT	1					<----->	
1	T5715-A6026	Double Acting Valve KIT	1					<----->	
1	T5715-A6027	Double Acting Valve KIT	1					<----->	
2	T4157-39051	DOUBLE ACTING VALVE(DTSOP) v	1						
3	01133-51085	BOLT	2						M10XP1.25
4	T5710-35111	TUBE	1						
5	T5710-35121	TUBE	1						
6	T4620-37092	JOINT BOLT v	2						
6	TC24-0238A	BOLT, JOINT	2					<----->	
7	04810-00200	O RING v	4						
7	04816-00200	O RING	4					<------	DIA19.8
7	04817-00200	O RING	4					<----->	DIA19.8
8	T5710-35101	SUPPORT	1						T6
9	01133-51025	BOLT	2						M10XP1.25
10	T4930-47071	NUT	2						M18XP1.5
11	T5710-30091	COUPLER,SELF-SEALING,AC,1-1-4 v	2						
11	TD24-0159A	COUPLER, QUICK	2					<----->	

----> Old replace New
<---- New replace Old
<-X-> Not interchangeable
<---> Interchangeable
<-O-> Interchangeable with another part(s)
* Please place an order assy(*)

https://tractormanualz.com/

TD2-G446001

HYDRAULIC BLOCK GROUP

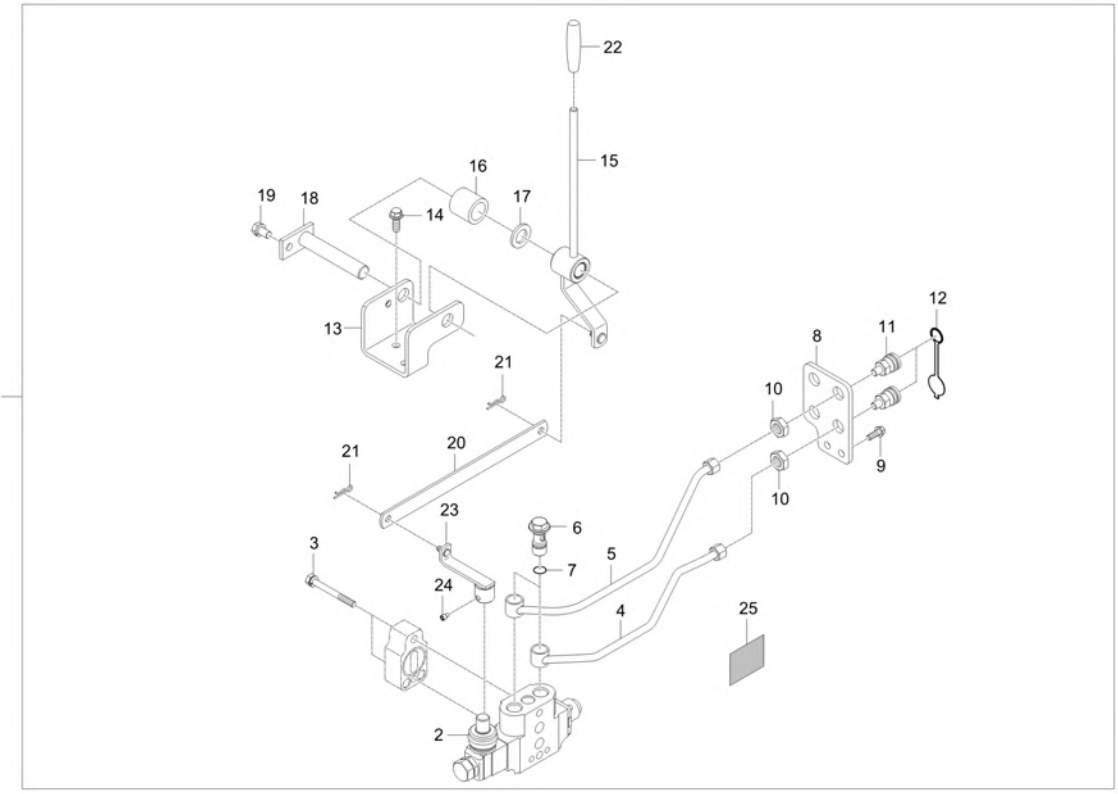

A : DK4510

No.	Part Number	Description	Qty A	Qty B	Qty C	Qty D	Qty E	I.C	Remark
12	T4720-90081	DUST-CAP	2						
12	TF14-0122A	CAP, COUPLER SOCKET-1/2	2					<----->	1/2
13	T5710-54012	BRACKET,DOUBLE ACTING LEVER	1						T4.5
14	01754-50816	BOLT, FLANGE	2						M8XP1.25
15	T5710-54022	LEVER, DOUBLE ACTING	1						N
15	T5710-54023	DOUBLE ACTING LEVER, LH	1					<----->	-
16	T2185-66721	SPACER	1						
17	T4810-66721	WASHER	1						N
18	T4835-66532	SHAFT	1						
19	01123-50814	BOLT, WASHER	1						M8*P1.25
20	T5710-54051	ROD, DOUBLE ACTING	1						T3.0
21	05525-50800	PIN, SNAP	2						DIA8
22	T2185-71221	GRIP, GRAY	1						
23	T5710-59071	LEVER1, DUBLE	1						N
24	T2610-39572	SCREW, SET	2						M8*P1.25
25	T4837-51242	LABEL, DOUBLE ACTING VALVE LEVER	1						

----> Old replace New <---- New replace Old <-X-> Not interchangeable
<---> Interchangeable <-O-> Interchangeable with another part(s)
* Please place an order assy(*)

https://tractormanualz.com/

TD2-G446002

HYDRAULIC BLOCK GROUP

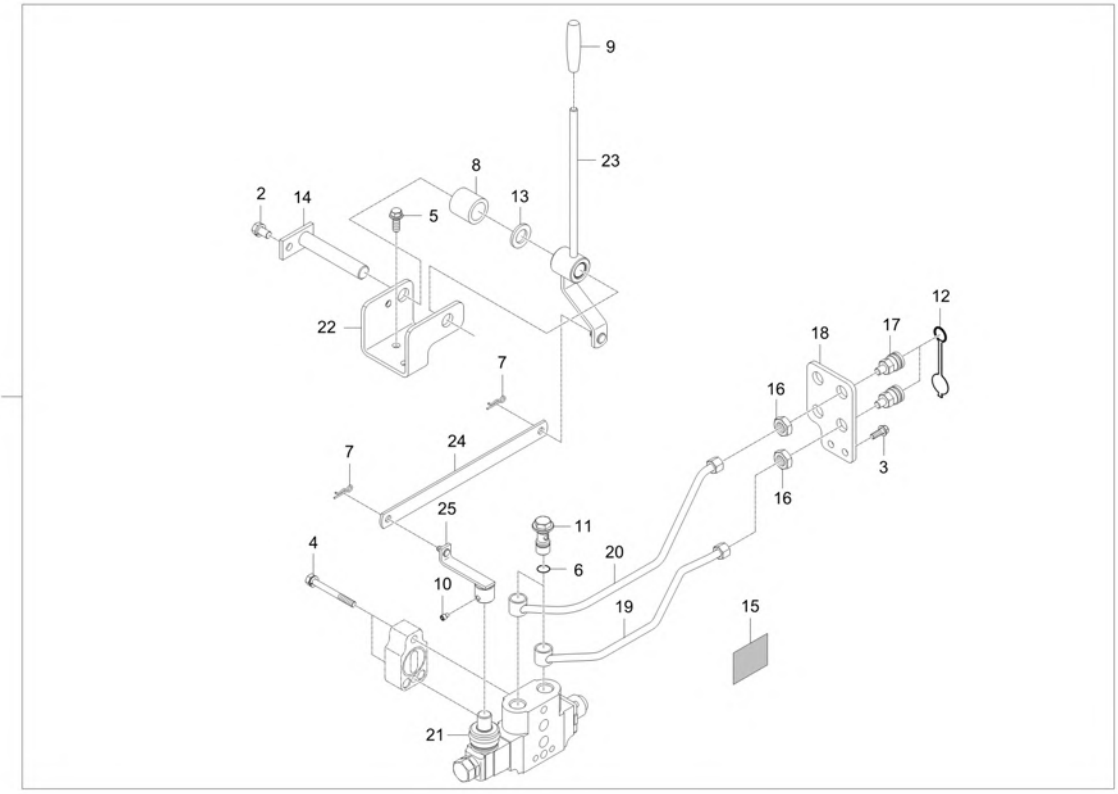

A : DK4510

No.	Part Number	Description	Qty A	Qty B	Qty C	Qty D	Qty E	I.C	Remark
1	T5715-A6033	DETENT DOUBLE V/V	1						
1	T5715-A6036	DETENT DOUBLE V/V	1					<----->	
1	T5715-A6037	DETENT DOUBLE V/V	1					<----->	
2	01123-50814	BOLT, WASHER	1						M8*P1.25
3	01133-51025	BOLT	2						M10XP1.25
4	01133-51085	BOLT	2						M10XP1.25
5	01754-50816	BOLT, FLANGE	2						M8XP1.25
6	04816-00200	O RING	4						DIA19.8
6	04817-00200	O RING	4					<----->	DIA19.8
7	05525-50800	PIN, SNAP	2						DIA8
8	T2185-66721	SPACER	1						
9	T2185-71221	GRIP, GRAY	1						
10	T2610-39572	SCREW, SET	2						M8*P1.25
11	T4620-37092	JOINT BOLT v	2						
11	TC24-0238A	BOLT, JOINT	2					<----->	
12	T4720-90081	DUST-CAP	2						
12	TF14-0122A	CAP, COUPLER SOCKET-1/2	2					<----->	1/2
13	T4810-66721	WASHER	1						N

----> Old replace New <---- New replace Old <-X-> Not interchangeable
<---> Interchangeable <-O-> Interchangeable with another part(s)
* Please place an order assy(*)

https://tractormanualz.com/

TD2-G446002

HYDRAULIC BLOCK GROUP

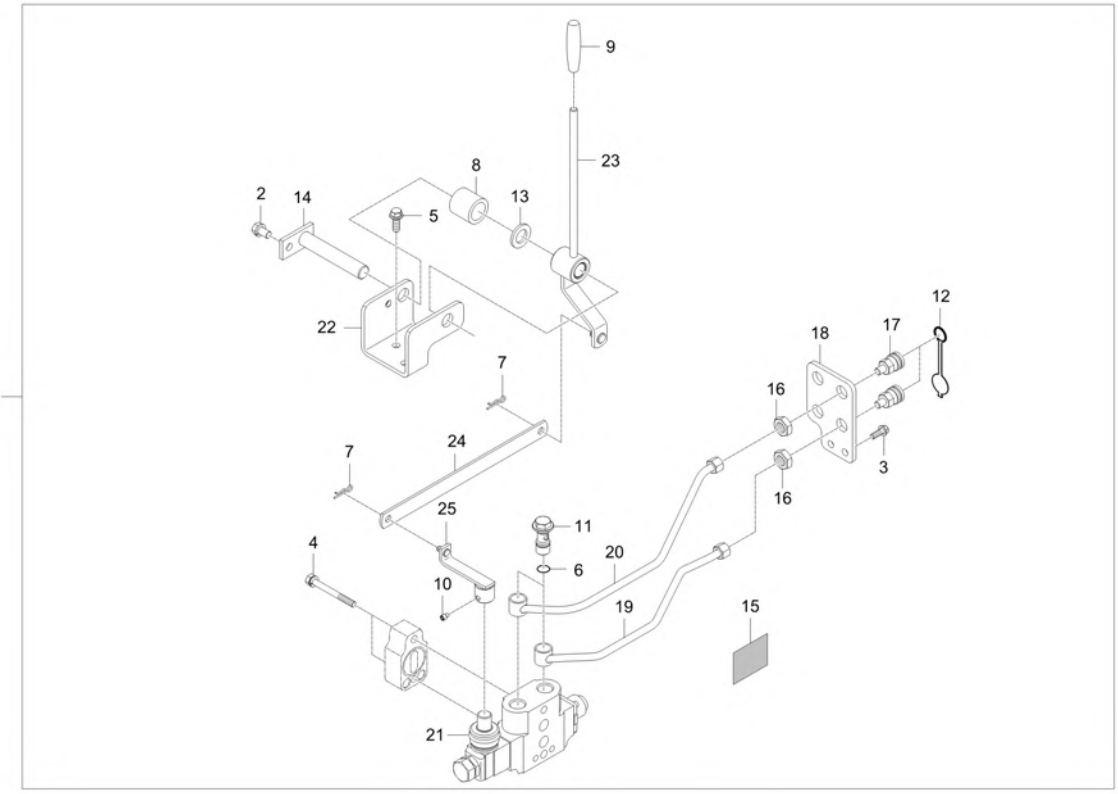

A : DK4510

No.	Part Number	Description	Qty A	Qty B	Qty C	Qty D	Qty E	I.C	Remark
14	T4835-66532	SHAFT	1						
15	T4837-51242	LABEL, DOUBLE ACTING VALVE LEVER	1						
16	T4930-47071	NUT	2						M18XP1.5
17	T5710-30091	COUPLER,SELF-SEALING,AC,1-1-4 v	2						
17	TD24-0159A	COUPLER, QUICK	2					<----->	
18	T5710-35101	SUPPORT	1						T6
19	T5710-35111	TUBE	1						
20	T5710-35121	TUBE	1						
21	T5710-39031	DETENTDOUBLEV/V	1						
22	T5710-54012	BRACKET,DOUBLE ACTING LEVER	1						T4.5
23	T5710-54022	LEVER, DOUBLE ACTING	1						N
23	T5710-54023	DOUBLE ACTING LEVER, LH	1					<----->	-
24	T5710-54051	ROD, DOUBLE ACTING	1						T3.0
25	T5710-59071	LEVER1, DUBLE	1						N

----> Old replace New
<---- New replace Old
<-X-> Not interchangeable
<---> Interchangeable
<-O-> Interchangeable with another part(s)
* Please place an order assy(*)

https://tractormanualz.com/

TC2-G591002

OPTIONAL LAMP GROUP

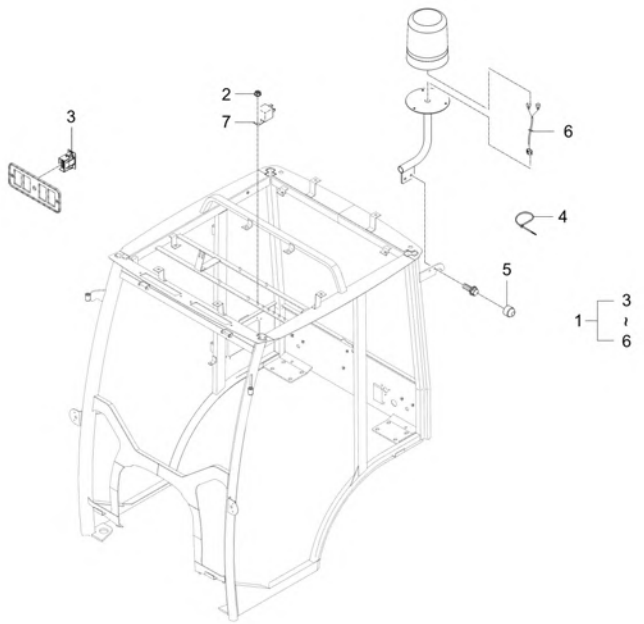

A : DK4510

No.	Part Number	Description	Qty A	Qty B	Qty C	Qty D	Qty E	I.C	Remark
1	TC26-0382A	LAMP-KIT	1						
2	02751-50060	NUT, FLANGE	1						M6XP1.0
3	T4520-54222	SWITCH WORKING LAMP	1						
4	T4520-82551	BAND, CORD v	3						L270
5	T4680-93211	NUT CAP M6	3						
6	T4688-69321	WIRE 2, LAMP CONNECTION HARNESS v	1						
7	T5535-69961	RELAY,5P	1						Bracket

----> Old replace New
<---> Interchangeable
* Please place an order assy(*)
<---- New replace Old
<-O-> Interchangeable with another part(s)
<-X-> Not interchangeable

https://tractormanualz.com/

INDEX 1

https://tractormanualz.com/

PART NO.	PAGE	PART NO.	PAGE	PART NO.	PAGE	PART NO.	PAGE	PART NO.	PAGE
01023-50610	75	01123-50825	145	01133-51030	123	01176-51680	271	01754-50610	172
01023-50612	249	01123-50825	150	01133-51030	144	01177-51235	94	01754-50610	179
01023-50616	188	01123-50830	237	01133-51030	169	01177-51235	123	01754-50610	195
01023-50616	189	01123-50830	238	01133-51030	197	01177-51235	213	01754-50610	196
01023-50618	40	01123-50835	136	01133-51032	41	01177-51235	232	01754-50610	230
01023-50618	69	01123-50835	150	01133-51032	85	01177-51240	88	01754-50612	19
01023-50620	143	01123-50835	160	01133-51035	88	01177-51240	92	01754-50612	29
01023-50645	31	01123-50845	152	01133-51035	92	01177-51245	93	01754-50612	59
01023-50645	65	01123-50865	26	01133-51035	93	01177-51255	94	01754-50612	182
01023-50665	310	01123-50870	20	01133-51035	118	01177-51255	123	01754-50612	199
01023-50680	2	01123-50870	27	01133-51035	288	01177-51265	93	01754-50614	210
01023-50680	38	01123-50870	60	01133-51035	289	01202-50620	69	01754-50614	210
01023-50680	84	01123-50870	77	01133-51040	147	01202-50625	40	01754-50616	15
01025-50612	223	01123-50880	145	01133-51040	149	01202-50625	69	01754-50616	54
01053-50625	30	01123-50890	26	01133-51045	288	01205-50616	254	01754-50616	163
01053-50645	160	01123-51020	241	01133-51075	127	01513-50822	26	01754-50616	166
01073-51630	122	01123-51030	301	01133-51085	312	01513-50822	31	01754-50616	166
01073-51630	142	01125-50816	227	01133-51085	314	01513-50822	32	01754-50616	166
01123-50814	239	01125-50816	262	01133-51090	20	01513-50822	65	01754-50616	195
01123-50814	313	01125-50818	230	01133-51090	60	01513-50822	77	01754-50616	195
01123-50814	314	01125-50820	180	01133-51090	138	01513-50822	79	01754-50616	195
01123-50816	21	01125-50820	223	01133-51225	157	01513-50835	31	01754-50616	198
01123-50816	30	01125-50820	229	01133-51225	214	01513-50835	35	01754-50616	200
01123-50816	35	01125-50820	255	01133-51225	233	01513-50835	65	01754-50616	253
01123-50816	80	01125-50820	265	01133-51225	256	01513-50835	80	01754-50620	32
01123-50816	82	01125-50820	300	01133-51230	214	01517-51028	36	01754-50620	79
01123-50816	90	01125-50825	264	01133-51230	233	01517-51028	56	01754-50620	174
01123-50816	95	01125-50830	30	01133-51235	123	01517-51440	131	01754-50620	277
01123-50816	141	01125-50850	28	01133-51240	36	01517-51632	136	01754-50625	11
01123-50816	147	01125-50850	78	01133-51240	56	01574-51225	256	01754-50625	13
01123-50816	209	01125-50855	15	01133-51240	113	01574-51230	269	01754-50625	42
01123-50816	213	01125-50855	54	01133-51245	93	01574-51235	113	01754-50625	70
01123-50816	214	01125-50870	28	01133-51255	123	01574-51250	256	01754-50625	74
01123-50816	227	01125-50870	31	01133-51255	137	01574-51260	93	01754-50625	87
01123-50816	232	01125-50870	65	01133-51265	93	01574-51265	88	01754-50640	34
01123-50816	233	01125-50870	78	01133-51265	113	01574-51265	92	01754-50640	67
01123-50816	240	01125-51025	305	01135-51025	264	01654-50830	17	01754-50812	166
01123-50816	262	01127-50820	143	01170-51016	31	01654-50830	57	01754-50812	170
01123-50816	306	01127-50820	150	01173-51018	115	01654-50835	6	01754-50812	195
01123-50820	98	01127-50825	171	01173-51230	269	01654-50835	71	01754-50812	200
01123-50820	105	01127-50825	207	01173-51430	214	01674-51032	36	01754-50816	9
01123-50820	143	01127-50825	224	01173-51430	233	01754-50610	6	01754-50816	11
01123-50820	145	01133-51016	102	01173-51435	202	01754-50610	7	01754-50816	12
01123-50820	160	01133-51016	269	01173-51435	269	01754-50610	28	01754-50816	12
01123-50820	162	01133-51018	20	01173-51445	131	01754-50610	34	01754-50816	51
01123-50820	188	01133-51020	228	01173-51445	305	01754-50610	47	01754-50816	52
01123-50820	231	01133-51025	108	01173-51455	202	01754-50610	48	01754-50816	94
01123-50820	292	01133-51025	110	01173-51690	263	01754-50610	55	01754-50816	102
01123-50822	35	01133-51025	147	01176-51030	153	01754-50610	67	01754-50816	111
01123-50822	39	01133-51025	157	01176-51030	244	01754-50610	71	01754-50816	115
01123-50822	41	01133-51025	223	01176-51232	153	01754-50610	72	01754-50816	121
01123-50822	68	01133-51025	258	01176-51235	131	01754-50610	78	01754-50816	123
01123-50822	80	01133-51025	312	01176-51440	139	01754-50610	138	01754-50816	126
01123-50822	85	01133-51025	314	01176-51680	220	01754-50610	161	01754-50816	210
01123-50825	131	01133-51030	94	01176-51680	271	01754-50610	166	01754-50816	211

https://tractormanualz.com/

PART NO.	PAGE	PART NO.	PAGE	PART NO.	PAGE	PART NO.	PAGE	PART NO.	PAGE
01754-50816	215	01774-51016	248	02176-50100	288	03014-50630	290	04013-50100	234
01754-50816	216	01774-51030	264	02176-50100	289	03016-50616	17	04013-50100	244
01754-50816	222	01774-51030	305	02176-50120	88	03016-50616	57	04013-50100	245
01754-50816	226	01774-51040	107	02176-50120	92	03016-50616	237	04013-50100	245
01754-50816	235	02012-50060	30	02176-50120	113	03016-50616	238	04013-50100	247
01754-50816	235	02014-50060	280	02176-50120	256	03024-50420	308	04013-50100	264
01754-50816	239	02014-50100	310	02176-50120	268	03024-50420	309	04013-50100	286
01754-50816	247	02054-50020	185	02176-50120	269	03024-50510	29	04013-50100	305
01754-50816	250	02054-50030	301	02176-50120	269	03024-50510	55	04013-50100	310
01754-50816	250	02054-50040	186	02176-50140	131	03024-50514	240	04013-50120	259
01754-50816	265	02054-50040	192	02176-50140	139	03054-50214	185	04013-50140	202
01754-50816	265	02054-50040	284	02176-50160	263	03054-50316	301	04013-50160	240
01754-50816	265	02054-50040	290	02176-50180	259	03054-50416	278	04015-50050	310
01754-50816	265	02054-50050	300	02751-50060	177	03054-50416	290	04015-50060	236
01754-50816	269	02056-50060	223	02751-50060	177	03054-50416	290	04015-50060	310
01754-50816	273	02056-50060	309	02751-50060	190	03054-50416	290	04015-50080	252
01754-50816	287	02076-50120	234	02751-50060	190	03054-50420	191	04015-50100	288
01754-50816	290	02076-50120	234	02751-50060	191	03054-50420	290	04015-50100	289
01754-50816	313	02076-50140	137	02751-50060	277	03054-50514	182	04015-50160	259
01754-50816	314	02076-50160	142	02751-50060	310	03054-50514	199	04111-50060	102
01754-50820	26	02076-50160	220	02751-50060	316	03054-50614	281	04512-50020	185
01754-50820	77	02076-50160	271	02751-50080	180	03056-50408	247	04512-50030	301
01754-50820	180	02076-50160	271	02751-50080	180	03056-50510	239	04512-50040	186
01754-50820	229	02076-50160	311	02751-50080	235	04011-50100	31	04512-50040	290
01754-50820	299	02114-50060	308	02751-50080	235	04011-50100	241	04512-50060	308
01754-50820	300	02114-50080	275	02751-50080	265	04011-50100	288	04512-50060	309
01754-50822	20	02114-50080	276	02751-50080	265	04011-50100	289	04512-50080	170
01754-50822	31	02114-50080	281	02751-50080	283	04011-50120	234	04512-50080	171
01754-50822	65	02114-50080	281	02751-50080	283	04011-50120	234	04512-50080	279
01754-50825	32	02114-50080	292	02751-50080	284	04011-50160	242	04512-50080	282
01754-50825	79	02114-50100	286	02751-50080	300	04011-50160	263	04512-50080	299
01754-50825	222	02114-50120	264	02751-50080	300	04011-50200	245	04512-50100	153
01754-50825	277	02114-50120	305	02761-50040	43	04012-50040	278	04512-50100	164
01754-50830	15	02156-50080	159	02761-50040	81	04012-50080	91	04512-50100	169
01754-50830	16	02156-50080	170	02761-50050	178	04012-50080	239	04512-50100	171
01754-50830	19	02156-50080	171	02761-50060	191	04012-50080	245	04512-50100	176
01754-50830	24	02156-50080	244	02761-50060	211	04013-50040	191	04512-50100	197
01754-50830	26	02156-50080	246	02761-50060	293	04013-50040	284	04512-50100	234
01754-50830	31	02156-50080	252	02763-50080	27	04013-50040	284	04512-50100	234
01754-50830	54	02156-50080	265	02763-50080	31	04013-50040	290	04512-50100	250
01754-50830	59	02156-50080	299	02763-50080	32	04013-50060	280	04512-50100	256
01754-50830	65	02174-50160	139	02763-50080	65	04013-50060	290	04512-50100	286
01754-50830	73	02176-50100	156	02763-50080	77	04013-50060	308	04512-50100	310
01754-50830	74	02176-50100	169	02763-50080	79	04013-50060	309	04512-50120	88
01754-50830	77	02176-50100	171	02763-50080	209	04013-50060	310	04512-50120	92
01754-50830	166	02176-50100	197	02763-50080	222	04013-50080	275	04512-50120	93
01754-50830	195	02176-50100	205	02763-50080	227	04013-50080	276	04512-50120	94
01754-50830	290	02176-50100	234	02763-50080	235	04013-50080	278	04512-50120	113
01754-50835	11	02176-50100	234	02763-50080	262	04013-50080	281	04512-50120	123
01754-50835	12	02176-50100	241	02763-50080	273	04013-50080	281	04512-50120	131
01754-50835	24	02176-50100	244	02763-50080	299	04013-50080	282	04512-50120	153
01754-50835	52	02176-50100	245	02783-50100	41	04013-50080	283	04512-50120	234
01754-50835	74	02176-50100	247	02783-50100	85	04013-50080	290	04512-50120	234
01754-50845	82	02176-50100	250	03014-50625	308	04013-50100	171	04512-50120	256
01774-51003	171	02176-50100	256	03014-50625	309	04013-50100	205	04512-50120	268

https://tractormanualz.com/

PART NO.	PAGE	PART NO.	PAGE	PART NO.	PAGE	PART NO.	PAGE	PART NO.	PAGE
04512-50120	269	04612-00320	103	04811-00150	71	05012-00510	52	05411-00850	154
04512-50140	131	04612-00350	95	04811-00160	10	05012-00818	88	05511-50215	236
04512-50140	139	04612-00350	107	04811-00160	13	05012-00818	92	05511-50218	240
04512-50140	202	04612-00350	118	04811-00160	52	05012-00818	93	05511-50218	240
04512-50140	202	04612-00350	119	04811-00210	159	05012-00818	118	05511-50218	245
04512-50140	214	04612-00450	113	04811-00220	11	05012-00820	153	05511-50220	91
04512-50140	233	04612-00450	154	04811-00220	12	05012-00822	90	05511-50318	245
04512-50140	259	04612-50160	242	04811-00240	112	05012-01016	137	05511-50318	245
04512-50140	263	04612-50200	245	04811-00250	159	05012-01018	5	05511-50335	137
04512-50140	269	04613-50060	159	04811-00320	28	05012-01018	5	05511-50420	156
04512-50140	305	04613-50060	159	04811-00320	78	05012-01018	50	05515-50800	239
04512-50160	122	04613-50060	159	04811-00390	113	05012-01018	93	05515-50800	243
04512-50160	142	04613-50060	160	04811-00420	139	05012-01018	94	05515-50800	247
04512-50160	202	04613-50060	275	04811-00490	131	05012-01018	113	05515-50800	249
04512-50160	220	04613-50060	282	04811-00490	139	05012-01018	123	05515-51000	228
04512-50160	263	04613-50100	278	04811-06350	141	05012-01018	127	05515-51000	241
04512-50160	271	04717-00800	94	04811-06420	141	05012-01020	88	05515-51000	306
04512-50160	271	04717-00800	123	04811-06630	15	05012-01020	92	05515-51200	259
04512-50160	311	04717-01000	88	04811-06630	54	05112-50850	91	05515-51600	261
04512-50180	259	04717-01000	92	04811-07220	271	05122-50616	248	05515-51600	264
04611-00350	252	04717-01000	115	04811-10300	17	05122-50828	245	05515-51600	305
04611-00520	98	04717-01000	126	04811-10300	57	05122-51025	228	05525-50600	247
04611-00520	105	04717-01000	134	04811-10380	149	05122-51025	245	05525-50600	248
04611-00580	125	04717-01400	131	04811-10800	144	05122-51025	306	05525-50600	248
04611-00580	129	04717-01600	102	04811-50300	11	05122-51028	244	05525-50800	240
04611-00720	119	04717-01600	105	04811-50300	12	05122-51028	244	05525-50800	247
04611-00800	133	04717-01600	153	04811-50300	53	05122-51028	245	05525-50800	296
04611-00800	134	04717-02150	134	04811-50300	158	05411-00412	98	05525-50800	298
04611-00920	119	04717-02650	88	04811-50500	24	05411-00412	105	05525-50800	313
04611-00920	134	04717-02650	92	04811-50700	139	05411-00412	303	05525-50800	314
04611-01000	113	04717-02650	94	04811-51050	131	05411-00412	303	05624-20408	204
04611-01000	113	04717-02650	123	04814-00160	8	05411-00422	303	05624-20408	204
04611-01100	128	04724-00120	40	04814-00160	51	05411-00422	303	05712-00410	11
04612-00150	248	04724-00120	69	04816-00150	12	05411-00425	98	05712-00410	12
04612-00160	160	04724-00180	160	04816-00150	16	05411-00425	102	05712-00410	70
04612-00160	240	04810-00140	154	04816-00150	52	05411-00425	105	05712-00720	17
04612-00160	240	04810-00200	312	04816-00150	73	05411-00540	111	05712-00720	19
04612-00170	252	04810-00260	146	04816-00200	295	05411-00625	105	05712-00720	57
04612-00180	241	04810-00280	143	04816-00200	297	05411-00625	115	05712-00720	59
04612-00180	249	04810-00320	143	04816-00200	312	05411-00628	98	05712-00730	17
04612-00190	23	04810-00750	154	04816-00200	314	05411-00628	98	05712-00730	57
04612-00190	62	04811-00090	145	04816-00220	12	05411-00635	100	06311-55060	88
04612-00250	96	04811-00100	7	04816-00220	52	05411-00635	102	06311-55060	92
04612-00250	100	04811-00100	47	04816-00220	150	05411-00635	103	06311-75045	4
04612-00250	100	04811-00100	48	04816-00220	150	05411-00635	115	06311-75045	50
04612-00250	103	04811-00100	72	04817-00200	295	05411-00635	117	06331-45010	88
04612-00250	117	04811-00100	149	04817-00200	297	05411-00635	117	06331-45010	92
04612-00250	141	04811-00140	102	04817-00200	312	05411-00635	141	06331-45010	126
04612-00250	245	04811-00140	111	04817-00200	314	05411-00635	240	06331-45010	134
04612-00280	104	04811-00140	115	04817-00220	150	05411-00635	241	06331-45014	131
04612-00300	96	04811-00140	121	04817-00220	150	05411-00828	303	06331-45016	102
04612-00300	103	04811-00150	6	05012-00408	17	05411-00828	303	06331-45016	105
04612-00300	112	04811-00150	11	05012-00408	57	05411-00840	111	06331-45016	153
04612-00300	115	04811-00150	12	05012-00510	11	05411-00840	111	06350-00506	88
04612-00300	115	04811-00150	16	05012-00510	13	05411-00840	245	06350-00607	19

https://tractormanualz.com/

PART NO.	PAGE	PART NO.	PAGE	PART NO.	PAGE	PART NO.	PAGE	PART NO.	PAGE
06350-00607	59	09318-88130	209	32210-2758-1	234	38240-2647-2	109	E5500-14232	62
06350-01012	88	09318-88130	227	32210-2758-1	250	38240-2651-5	109	E5500-15553	19
06611-15010	131	09318-88130	262	32240-3446-1	31	38240-2652-3	109	E5500-15553	59
06613-10010	139	09318-88140	82	32240-3446-1	182	38245-2142-1	158	E5500-33142	11
06613-10010	140	09318-88180	16	32350-2898-4	245	38245-2925-3	290	E5500-33142	12
06613-10010	160	09318-88180	26	32353-7189-3TP	259	38360-2178-1	96	E5500-33142	53
06613-20010	139	09318-88180	29	34150-1426-1	134	38360-2178-1	100	E5500-39013	168
06613-20010	140	09318-88180	55	34150-2156-1	100	38430-1827-1	211	E5500-63016	197
07715-00805	112	09318-88180	73	34150-2156-1	100	38430-1827-1	211	E5500-73012	26
07715-01605	98	09318-88180	77	34150-2156-1	115	38430-1827-1	212	E5500-73013	26
07715-01605	102	09318-88220	16	34150-2939-1	15	38430-1827-1	254	E5500-73013	77
07715-01605	105	09318-88220	73	34150-2939-1	54	38430-2175-1	103	E5500-73272	26
07715-01605	115	09318-88250	35	34150-3764-4	202	38430-2554-1	103	E5500-73272	77
08101-06205	11	09318-88250	80	34150-3764-4TP	260	38430-2634-3	109	E5500-73342	26
08101-06205	12	09318-88260	35	34150-3764-4TP	261	38430-2634-4	109	E5500-73342	77
08101-06205	52	09318-88260	80	34150-3764-4TP	271	38440-4467-3	139	E5500-73343	26
08101-06206	134	09500-25388	91	34354-7158-3TP	261	38440-4475-1	139	E5500-73343	77
08101-06208	134	09500-35528	95	37150-2176-1	96	38455-2314-1	104	E5608-99522	3
08101-06211	113	09500-45609	154	37150-2176-1	96	38630-4476-1	139	E5608-99522	46
08101-06212	127	09502-55210	115	37150-2179-1	96	41011-5151-4	269	E5616-74252ED	2
08101-06305	96	09661-80150	75	37150-2179-1	96	41182-5151-1	264	E5616-74252ED	38
08101-06305	103	09661-80260	75	37150-3447-1	145	41182-5151-1	305	E5616-74252ED	84
08101-06305	115	09661-80300	30	37150-3447-1	166	44366-4723-1	205	E5629-24401	40
08101-06305	115	09661-80450	30	37150-3447-1	166	44366-4723-1	286	E5629-24401	69
08101-06305	118	14911-4275-1	30	37150-3447-1	184	52300-3413-1	244	E5800-14261	23
08101-06305	118	14911-4275-1	75	37150-3447-1	195	52300-3413-1	244	E5800-14261	62
08101-06306	96	14911-4275-1	126	37150-3447-1	195	53650-6127-1	265	E5800-25161	37
08101-06306	100	14911-4275-1	126	37150-3447-1	201	55571-3238-1	236	E5800-25161	63
08101-06306	118	14911-4275-1	226	37150-3447-1	207	55611-5711-1	147	E5800-25182	37
08101-06307	95	15021-1424-1	23	37150-3447-1	209	62331-1853-2	98	E5800-25182	63
08101-06307	107	15021-1424-1	62	37150-3447-1	224	62331-1853-2	102	E5800-64102	171
08101-06307	118	15221-0175-1	9	37150-3447-1	227	62331-1853-2	105	E5800-96031	11
08101-06307	133	15221-0175-1	51	37150-3447-1	236	62331-1853-2	115	E5800-96031	14
08101-06308	113	15221-0337-3	8	37150-3447-1	262	62411-3313-1	147	E5800-96032	14
08101-06309	113	15221-0337-3	51	37155-3447-1	171	66204-3623-1	207	E5800-96032	52
08101-06309	136	15221-0338-3	4	37155-3447-1	182	66204-3623-1	224	E5850-32616	16
08101-06807	119	15221-0338-3	50	37155-3447-1	182	70515-1633-4	269	E5850-32617	16
08111-06003	252	15221-0339-2	5	37155-3447-1	199	82KC-0641	211	E5850-32617	73
08401-51107	134	15221-0339-2	50	37300-2643-2	108	84612-1445-0	245	E5850-74151	2
08511-02525	91	15221-0349-3	8	37300-2644-2	108	84612-1823-0	284	E5850-74151	38
08511-04550	153	15221-0349-3	51	37300-2648-1	109	99415-1502-2	311	E5850-74151	84
08511-05050	153	15301-7244-0	126	37300-2649-1	109	99415-1503-1	311	E5900-96021	4
08711-30209	108	15301-7247-0	30	37300-2661-4	108	C7280-89541	281	E5900-96021	8
08711-32011	108	15471-9536-1	20	37300-2817-2	109	CE11-0011A	143	E5900-96022	4
08822-53017	245	15471-9536-1	61	37305-2817-1	94	E1500-18411	207	E5900-96022	8
08822-53020	96	19202-2325-1	17	37305-2817-1	123	E1500-18411	224	E5900-96022	50
08822-83327	100	19202-2325-1	57	37800-4387-1	108	E5205-24321	19	E5900-96022	51
08822-83327	100	19202-2325-2	17	37805-4350-1	131	E5205-24321	59	E6200-04623	169
08822-83327	103	31220-2234-2	107	37805-4452-1	100	E5500-04464	17	E6200-04623	197
08823-23727	103	31220-2628-1	108	37805-4452-1	103	E5500-04464	57	E6200-91092	295
08823-54027	96	31220-2639-2	108	37805-4452-1	117	E5500-11302	15	E6200-91092	297
09318-88130	32	31351-3714-2	158	37805-4452-1	117	E5500-11302	54	E6201-32443	16
09318-88130	75	31355-2949-1	156	38240-1883-1	185	E5500-13333	23	E6201-32443	73
09318-88130	79	31355-2949-1	191	38240-1883-1	310	E5500-13333	62	E6300-35681	12
09318-88130	162	32210-2758-1	131	38240-2214-1	107	E5500-14232	23	E6300-35681	70

https://tractormanualz.com/

PART NO.	PAGE	PART NO.	PAGE	PART NO.	PAGE	PART NO.	PAGE	PART NO.	PAGE
E6301-13151	23	E6520-34021	40	EF17-0007A	167	F5800-01113	4	F5800-14001	62
E6301-13151	62	E6520-34021	69	EF36-0003A	48	F5800-01114	4	F5800-14521	29
E6301-14111	23	E6520-74111	2	EF36-0011A	24	F5800-01115	4	F5800-14521	55
E6301-14111	62	E6520-74111	38	EF44-0023A	52	F5800-01116	4	F5800-14561	29
E6301-14311	23	E6520-74111	84	EH13-0002A	31	F5800-01122	4	F5800-14561	55
E6301-14311	62	E6700-13111	23	EH13-0002A	65	F5800-01123	5	F5800-16012	19
E6301-14331	23	E6700-13111	62	EH15-0001A	74	F5800-01124	5	F5800-16012	59
E6301-14331	62	E6700-13121	23	EH15-0001B	74	F5800-01601	6	F5800-16152	19
E6301-14431	23	E6700-13121	62	EH15-0016A	75	F5800-01601	71	F5800-16152	59
E6301-14431	62	E6700-13611	8	EH16-0003A	2	F5800-01602	71	F5800-16403	162
E6301-21202	18	E6700-13622	8	EH16-0003A	38	F5800-01611	6	F5800-17011	39
E6301-33661	40	E6700-65511	43	EH19-0003A	166	F5800-03042	8	F5800-17011	68
E6301-33661	69	E6810-13561	8	EH19-0004A	167	F5800-03043	8	F5800-17012	39
E6301-33812	4	E6810-13581	8	EH21-0001A	50	F5800-03044	8	F5800-17012	68
E6301-33812	50	E6810-32292	16	EH23-0002B	65	F5800-03044	51	F5800-17501	32
E6302-21051	18	E6810-32292	73	EH23-0003B	52	F5800-03052	8	F5800-17502	32
E6302-21051	58	E6820-32451	16	EH23-0003C	52	F5800-03053	8	F5800-17503	32
E6302-21151	18	E6820-32451	73	EH25-0001A	74	F5800-03054	8	F5800-17503	79
E6302-21161	18	E6850-73342	26	EH25-0002A	82	F5800-03112	8	F5800-17511	32
E6303-33661	6	E6850-73342	77	EH25-0006A	75	F5800-03113	8	F5800-17512	32
E6303-33661	71	E6864-63011	169	EH25-0006A	82	F5800-03311	9	F5800-17512	79
E6303-33751	6	E7103-63821	37	EH25-0006A	82	F5800-03311	51	F5800-17521	32
E6303-33751	71	E7103-63821	63	EH25-0007A	82	F5800-04111	10	F5800-17522	32
E6303-33752	6	E7230-11081	221	EH25-0009A	82	F5800-04111	13	F5800-17522	79
E6303-33752	71	E7230-11222	222	EH25-0010A	82	F5800-04112	10	F5800-17531	32
E6308-73261	26	E7240-32731	168	EH28-0008A	86	F5800-04112	13	F5800-17531	79
E6308-73261	77	E7251-64011	171	EH28-0008B	86	F5800-04113	10	F5800-20101	35
E6400-13241	23	E7251-64012	171	EH28-0008C	86	F5800-04113	13	F5800-20101	80
E6400-13241	62	E7300-11781	98	EH28-0013A	3	F5800-04114	10	F5800-21311	58
E6403-13361	23	E7300-11791	33	EH28-0013B	3	F5800-04114	13	F5800-21331	58
E6403-13361	62	E7300-11791	83	EH29-0001A	81	F5800-04114	52	F5800-23111	17
E6500-33062	5	E7300-72891	33	EH29-0002A	166	F5800-04115	10	F5800-23111	57
E6500-33062	50	E7300-72891	83	EH29-0002A	195	F5800-04115	13	F5800-26501	161
E6500-33063	5	EF11-0001A	36	EH32-0001A	60	F5800-04115	52	F5800-26501	166
E6500-33063	50	EF11-0001A	56	EH35-0001A	74	F5800-04116	13	F5800-26501	167
E6500-33201	40	EF15-0002A	49	EH35-0002A	74	F5800-04116	52	F5800-26501	195
E6500-33201	69	EF15-0002B	49	EH35-0005A	74	F5800-06201	17	F5800-26501	196
E6500-33242	40	EF15-0002C	49	EH35-0006A	82	F5800-06201	57	F5800-26502	166
E6500-33251	40	EF15-0004A	18	EH35-0007A	82	F5800-11762	31	F5800-26502	167
E6500-95802	40	EF15-0004A	58	EH35-0011A	82	F5800-11763	31	F5800-26801	161
E6500-95802	69	EF15-0005A	46	EH35-0012A	82	F5800-11821	31	F5800-26801	196
E6500-95803	40	EF15-0005B	1	EH35-0015A	74	F5800-11821	65	F5800-32111	6
E6500-95803	69	EF15-0029A	22	EH35-0015B	74	F5800-12203	24	F5800-32111	71
E6510-05552	29	EF15-0029A	22	EH35-0018A	75	F5800-12252	24	F5800-33041	40
E6510-05552	55	EF15-0029A	60	EH39-0001A	42	F5800-12313	34	F5800-33041	69
E6510-14532	29	EF15-0030A	21	EH39-0001A	87	F5800-12313	67	F5800-33051	40
E6510-14532	55	EF15-0030A	21	EH39-0002A	167	F5800-12351	34	F5800-33051	69
E6510-14671	29	EF15-0030A	60	EH39-0002B	167	F5800-12351	67	F5800-34202	45
E6510-14671	55	EF15-0038A	22	F5800-01003	4	F5800-13764	34	F5800-34203	45
E6510-33661	29	EF15-0038A	60	F5800-01004	4	F5800-13764	67	F5800-34204	45
E6510-33661	55	EF15-0039A	21	F5800-01005	4	F5800-13771	34	F5800-34205	45
E6510-91502	23	EF15-0039A	60	F5800-01006	4	F5800-13772	34	F5800-34206	45
E6510-91502	62	EF15-0044A	47	F5800-01007	4	F5800-13773	34	F5800-34207	45
E6520-34011	40	EF15-0044A	72	F5800-01008	4	F5800-13773	67	F5800-36411	7
E6520-34011	69	EF17-0007A	161	F5800-01108	4	F5800-14001	23	F5800-36411	48

https://tractormanualz.com/

PART NO.	PAGE	PART NO.	PAGE	PART NO.	PAGE	PART NO.	PAGE	PART NO.	PAGE
F5800-36412	7	F5830-17562	32	F6800-04215	15	F6800-10612	21	F6800-20401	80
F5800-36412	47	F5830-17562	79	F6800-04215	54	F6800-10612	60	F6800-20501	35
F5800-36412	48	F5830-17801	32	F6800-04221	15	F6800-11651	33	F6800-20501	80
F5800-36413	7	F5830-17801	79	F6800-04251	15	F6800-11651	66	F6800-20702	5
F5800-36413	47	F5830-18951	33	F6800-04251	54	F6800-11951	39	F6800-20703	5
F5800-36413	72	F5830-18951	83	F6800-04301	10	F6800-11951	68	F6800-20703	50
F5800-36414	7	F5830-25101	41	F6800-04301	13	F6800-12103001	25	F6800-21111	18
F5800-36414	47	F5830-25101	85	F6800-04302	13	F6800-12103002	25	F6800-21311	18
F5800-36414	72	F5830-25422	41	F6800-04302	70	F6800-12103002	75	F6800-21331	18
F5800-36421	7	F5830-25423	41	F6800-04401	11	F6800-12104	24	F6800-21351	18
F5800-36422	7	F5830-25423	85	F6800-04401	13	F6800-12371	41	F6800-21351	58
F5800-38202	44	F5830-72914	26	F6800-04401	70	F6800-12371	85	F6800-22011	18
F5800-38203	44	F5830-72914	77	F6800-04501	11	F6800-13311	26	F6800-22011	58
F5800-38204	44	F5830-74282	38	F6800-04501	14	F6800-13311	77	F6800-22111	18
F5800-38205	44	F5830-74282	64	F6800-04501	52	F6800-14351	23	F6800-22141	18
F5800-38206	44	F5831-04611	36	F6800-04711	10	F6800-14351	62	F6800-22141	58
F5800-38207	44	F5831-04612	36	F6800-04711	13	F6800-15111	19	F6800-22312	18
F5800-41202	44	F5831-04612	56	F6800-04712	13	F6800-15111	59	F6800-23481	17
F5800-41203	44	F5835-16142	162	F6800-04721	10	F6800-15121	29	F6800-23481	57
F5800-41204	44	F5850-10102	20	F6800-04721	13	F6800-15122	29	F6800-23491	17
F5800-41205	44	F5850-10102	60	F6800-04731	10	F6800-15122	55	F6800-23491	57
F5800-41206	44	F5850-14501	29	F6800-04731	13	F6800-16121	30	F6800-23501	38
F5800-41207	44	F5850-14501	55	F6800-04811	17	F6800-16121	82	F6800-23501	64
F5800-42501	24	F5850-14511	29	F6800-04811	57	F6800-16121	162	F6800-23531	17
F5800-43182	44	F5850-73341	9	F6800-09051	19	F6800-16131	30	F6800-23531	57
F5800-43183	44	F5850-73341	51	F6800-09051	59	F6800-16131	162	F6800-23541	17
F5800-43184	44	F6720-04711	52	F6800-10101	20	F6800-16161	16	F6800-23541	57
F5800-43185	44	F6720-04712	52	F6800-10153	20	F6800-16161	73	F6800-24111	17
F5800-43186	44	F6720-04721	52	F6800-10154	20	F6800-16172	16	F6800-24111	57
F5800-43187	44	F6720-21111	58	F6800-10155	20	F6800-16172	73	F6800-25501	39
F5800-64101	11	F6800-01311	5	F6800-10155	60	F6800-16181	162	F6800-25501	68
F5800-64101	12	F6800-01311	76	F6800-10161	20	F6800-16181	262	F6800-26102	42
F5800-64101	171	F6800-01321	5	F6800-10162	20	F6800-16271	19	F6800-26102	87
F5800-64422	26	F6800-01321	76	F6800-10163	20	F6800-16271	59	F6800-26201	166
F5800-65561	43	F6800-03451	8	F6800-10163	60	F6800-16411	30	F6800-26201	195
F5800-A0014	4	F6800-03451	51	F6800-10261	20	F6800-16411	162	F6800-26302	195
F5805-16402	30	F6800-03501	9	F6800-10261	21	F6800-16511	19	F6800-26303	166
F5810-18943	33	F6800-03501	51	F6800-10261	60	F6800-16511	59	F6800-26303	195
F5810-18943	66	F6800-04102	10	F6800-10261	60	F6800-17101	39	F6800-26401	166
F5810-25013	37	F6800-04103	10	F6800-10301	20	F6800-17101	68	F6800-26401	195
F5810-25013	63	F6800-04103	12	F6800-10301	60	F6800-17111	39	F6800-26651	196
F5810-25014	37	F6800-04104	10	F6800-10351	20	F6800-17111	68	F6800-26661	41
F5810-25014	63	F6800-04104	12	F6800-10352	21	F6800-17211	31	F6800-26661	85
F5810-25113	37	F6800-04105	10	F6800-10353	21	F6800-17211	65	F6800-26671	41
F5810-25113	63	F6800-04105	12	F6800-10353	60	F6800-17551	32	F6800-26671	85
F5810-25114	37	F6800-04106	10	F6800-10401	21	F6800-17551	79	F6800-26701	195
F5810-25114	63	F6800-04106	12	F6800-10401	60	F6800-17701	31	F6800-26751	195
F5830-05511	29	F6800-04107	10	F6800-10452	21	F6800-17701	65	F6800-29112	193
F5830-05511	55	F6800-04107	12	F6800-10453	21	F6800-18961	33	F6800-33651	5
F5830-16121	30	F6800-04108	10	F6800-10454	21	F6800-18961	66	F6800-33651	50
F5830-16141	30	F6800-04108	13	F6800-10455	21	F6800-20301	32	F6800-33671	40
F5830-17201	31	F6800-04109	13	F6800-10455	60	F6800-20301	35	F6800-33671	69
F5830-17202	31	F6800-04112	10	F6800-10461	21	F6800-20301	79	F6800-35631	17
F5830-17202	65	F6800-04213	15	F6800-10502	21	F6800-20301	80	F6800-35631	57
F5830-17561	32	F6800-04214	15	F6800-10611	21	F6800-20401	35	F6800-35661	11

https://tractormanualz.com/

PART NO.	PAGE	PART NO.	PAGE	PART NO.	PAGE	PART NO.	PAGE	PART NO.	PAGE
F6800-35661	14	F6800-92411	41	T2131-86502	284	T2350-50431	207	T2610-22851	100
F6800-35661	70	F6800-92411	68	T2131-88502	292	T2350-50431	222	T2610-23621	103
F6800-42511	24	F6800-92411	68	T2131-88503	292	T2350-50431	224	T2610-23681	104
F6800-42511	74	F6800-92411	85	T2131-88504	292	T2350-55881	244	T2610-23823	107
F6800-53181	24	F6800-92421	39	T2131-88505	292	T2350-55881	246	T2610-23831	107
F6800-53181	74	F6800-92421	68	T2165-39281	160	T2350-55881	265	T2610-23841	107
F6800-53471	24	F6800-92441	39	T2181-25442	269	T2350-55922	242	T2610-23851	107
F6800-53471	74	F6800-92441	39	T2185-26331	109	T2350-55961	244	T2610-23882	107
F6800-53722	24	F6800-92441	41	T2185-26332	109	T2350-55961	245	T2610-24131	101
F6800-53722	74	F6800-92441	68	T2185-44764	241	T2350-66101	252	T2610-37453	154
F6800-53732	24	F6800-92441	68	T2185-66721	313	T2350-95472	236	T2610-37482	149
F6800-53732	74	F6800-92441	85	T2185-66721	314	T2360-34142	247	T2610-39202	160
F6800-53742	24	F6800-92451	34	T2185-70482	273	T2391-69071	191	T2610-39222	160
F6800-53742	74	F6800-92451	67	T2185-70491	207	T2391-87061	284	T2610-39233	160
F6800-60011	189	F6800-92452	34	T2185-70491	224	T2440-16351	252	T2610-39252	160
F6800-64421	26	F6800-92452	67	T2185-71221	313	T2440-21361	95	T2610-39572	159
F6800-64421	77	F6800-92771	20	T2185-71221	314	T2440-28203	112	T2610-39572	296
F6800-65511	43	F6800-92771	20	T2185-71241	252	T2445-29781	269	T2610-39572	298
F6800-65511	81	F6800-92771	60	T2185-71241	296	T2555-06005	117	T2610-39572	313
F6800-72531	38	F6800-94111	34	T2185-71241	298	T2555-06005	117	T2610-39572	314
F6800-72921	26	F6800-94111	67	T2185-82551	162	T2555-06007	95	T2610-39882	156
F6800-72921	77	F6805-53001	24	T2185-82551	164	T2555-06204	100	T2610-50271	256
F6800-73031	28	F6805-53451	24	T2185-82551	192	T2555-06205	115	T2610-52461	193
F6800-73031	78	F6805-53452	24	T2185-82551	200	T2555-06205	115	T2610-55731	246
F6800-73051	28	F6805-53453	24	T2185-82551	209	T2555-06207	119	T2610-55751	246
F6800-73051	78	F6805-53453	74	T2185-82551	227	T2555-23331	102	T2610-55802	246
F6800-73341	5	F6805-99521	3	T2185-82551	262	T2555-23331	111	T2611-26693	193
F6800-73341	50	F6805-99521	46	T2185-82551	301	T2555-23331	115	T2611-29723	220
F6800-90111	5	F6820-72531	38	T2185-82561	200	T2555-26641	111	T2611-29731	220
F6800-90121	5	F6820-72531	84	T2185-85101004	310	T2555-28461	112	T2611-29841	220
F6800-90121	5	F6860-96041	27	T2185-85101005	310	T2555-52141	193	T2611-29841	271
F6800-90121	50	F6860-96042	27	T2185-97153	263	T2555-52262	193	T2611-54823	256
F6800-91011	21	F6860-96042	77	T2198-31052	179	T2555-52282	193	T2611-54824	256
F6800-91011	21	K9100-50241	269	T2198-68811	185	T2555-52353	193	T2611-54825	256
F6800-91811	33	KX97382-S51	221	T2198-69471	172	T2555-52611	193	T2615-25621	119
F6800-91812	33	M301260	146	T2198-70471	267	T2555-53025	96	T2615-25661	119
F6800-91812	66	P5370-82551	181	T2198-82571	75	T2555-55461	268	T2615-25671	119
F6800-91821	33	P5370-82551	209	T2198-82571	82	T2555-55462	268	T2615-25681	119
F6800-91822	33	P5370-82551	227	T2198-82571	200	T2555-69022	165	T2615-25681	119
F6800-91822	66	P5370-82551	262	T2230-85242	263	T2555-69023	165	T2615-25691	119
F6800-91851	146	P5370-82551	302	T2230-85242	305	T2555-69023	179	T2615-25711	119
F6800-91911	34	T2131-51031	277	T2240-26354	109	T2555-69571	198	T2615-25721	119
F6800-91911	35	T2131-55451	308	T2240-26355	109	T2555-75951	188	T2615-25732	119
F6800-91911	39	T2131-55452	308	T2241-50311	193	T2555-82161	275	T2615-25742	119
F6800-91911	39	T2131-69351	191	T2305-21762	100	T2610-14303	90	T2615-25771	120
F6800-91911	41	T2131-69601	191	T2305-21762	100	T2610-14541	104	T2615-25782	120
F6800-91911	67	T2131-82211	284	T2305-26641	159	T2610-14831	91	T2615-25791	120
F6800-91911	68	T2131-82221	284	T2305-43883	89	T2610-21321	259	T2615-55112	193
F6800-91911	68	T2131-82511	290	T2305-43883	92	T2610-21754	96	T2630-41612	139
F6800-91911	80	T2131-82521	290	T2350-13612	226	T2610-21812	96	T2630-41622	140
F6800-91911	85	T2131-83011	286	T2350-46612	299	T2610-21812	100	T2630-41691	140
F6800-92311	38	T2131-83021	286	T2350-50021	222	T2610-22171	102	T2630-42161	126
F6800-92311	64	T2131-83761	277	T2350-50252	230	T2610-22812	100	T2630-42202	125
F6800-92411	39	T2131-83771	278	T2350-50421	207	T2610-22821	100	T2630-42264	125
F6800-92411	39	T2131-86401	284	T2350-50421	224	T2610-22834	100	T2630-42291	125

https://tractormanualz.com/

PART NO.	PAGE	PART NO.	PAGE	PART NO.	PAGE	PART NO.	PAGE	PART NO.	PAGE
T2630-42291	129	T4125-08251	277	T4520-26931	246	T4620-37092	295	T4680-93211	316
T2630-42314	125	T4125-08251	278	T4520-38151	143	T4620-37092	297	T4681-44611	141
T2630-42451	125	T4125-13561	207	T4520-41821	165	T4620-37092	312	T4681-82421	283
T2630-42451	129	T4125-13561	224	T4520-41821	179	T4620-37092	314	T4681-83431	291
T2630-42452	129	T4125-14261	94	T4520-43011	133	T4620-43541	134	T4681-83611	191
T2630-42461	125	T4125-14261	123	T4520-43011	134	T4620-44592	115	T4681-85011	280
T2630-42461	129	T4125-27202	113	T4520-43021	133	T4620-44592	141	T4681-85331	281
T2630-42462	129	T4125-41601	139	T4520-43021	134	T4620-50701	211	T4681-90911	275
T2630-42471	125	T4125-41602	139	T4520-43031	133	T4620-50701	211	T4681-90911	281
T2630-42471	129	T4125-42321	127	T4520-43031	134	T4620-55762	246	T4682-43132	127
T2630-42472	129	T4125-42322	127	T4520-43041	133	T4620-55841	244	T4682-43261	131
T2630-42481	125	T4125-42602	139	T4520-43041	134	T4620-55912	242	T4682-43372	131
T2630-42481	129	T4125-42603	139	T4520-43051	133	T4620-66161	147	T4682-43571	173
T2630-42482	129	T4125-43102	127	T4520-43051	134	T4620-69251	181	T4682-43731	133
T2630-42491	125	T4125-43103	127	T4520-43061	133	T4620-69272	164	T4682-43731	136
T2630-42491	129	T4125-43242	133	T4520-43061	134	T4620-69272	299	T4682-65301	310
T2630-42492	129	T4125-53121	272	T4520-43071	127	T4620-69331	184	T4682-65311	246
T2630-42501	130	T4125-69062	164	T4520-43081	127	T4620-69331	201	T4686-41351	256
T2630-42511	130	T4128-33228	125	T4520-43091	127	T4620-70272	248	T4686-43622	136
T2630-42751	125	T4128-33228	129	T4520-43141	127	T4620-81842	275	T4686-51951	265
T2630-42751	129	T4144-75952	188	T4520-43151	127	T4620-81842	276	T4686-82431	292
T2630-42752	129	T4145-55791	246	T4520-43171	127	T4620-81842	281	T4688-69321	316
T2630-43012	127	T4145-60582	229	T4520-43601	139	T4620-81842	292	T4710-22242	95
T2630-43022	127	T4145-82052	284	T4520-43652	136	T4620-85392	206	T4720-90081	313
T2630-43032	128	T4145-82072	290	T4520-43941	137	T4620-85451	260	T4720-90081	314
T2630-43042	128	T4145-82081	290	T4520-44081	108	T4620-85451	261	T4810-21283	98
T2630-43052	128	T4157-39051	295	T4520-44091	108	T4620-85471TP	261	T4810-45761	145
T2630-43111	127	T4157-39051	312	T4520-44101	108	T4620-88051	275	T4810-46751	143
T2630-43121	127	T4157-51211	242	T4520-54222	191	T4620-88051	282	T4810-46762	143
T2630-44581	141	T4158-26331	109	T4520-54222	293	T4624-11012	221	T4810-46971	147
T2630-44602	141	T4158-26341	109	T4520-54222	316	T4624-70271	218	T4810-47131	150
T2630-85411	261	T4158-26351	109	T4520-63624	137	T4624-84411	283	T4810-66721	313
T2630-85421	261	T4180-34041	145	T4520-63625	137	T4624-84511	281	T4810-66721	314
T2630-85431	261	T4182-53191	193	T4520-75481	173	T4624-93011004	303	T4810-67832	209
T2630-85441	261	T4186-29851	220	T4520-82551	316	T4624-93011004	303	T4810-67832	227
T2630-95052	235	T4186-29851	271	T4520-83301	236	T4624-93011006	303	T4810-67832	262
T2660-55771	246	T4240-14081	93	T4520-88401	276	T4624-93011006	303	T4810-82341	308
T4025-68301	165	T4240-14081	94	T4520-88401	278	T4624-93011007	303	T4810-82341	309
T4025-68301	179	T4240-14081	123	T4520-88401	281	T4624-93011007	304	T4810-82352	291
T4025-68301	182	T4240-21792	96	T4520-88401	291	T4624-93011008	303	T4810-82421	308
T4025-68301	187	T4240-27743	311	T4520-88401	292	T4624-93011008	304	T4810-82421	309
T4025-68301	199	T4240-27744	311	T4520-89921	278	T4625-52281	193	T4810-82741	278
T4025-68301	290	T4240-28533TP	258	T4520-89931BB	278	T4625-52351	193	T4810-82961	278
T4115-21771	96	T4240-71802	259	T4620-14503	90	T4625-55431	223	T4815-46791	192
T4115-26101	108	T4260-50100	252	T4620-21481	93	T4625-55431	235	T4815-78112	292
T4115-26102	108	T4260-62552	9	T4620-21481	94	T4625-55431	250	T4815-82361	192
T4115-26511	109	T4260-62552	51	T4620-21481	123	T4625-55431	254	T4815-82421	283
T4115-26521	109	T4340-27122	113	T4620-21591	125	T4625-55441	207	T4815-87181	292
T4115-31331BB	138	T4340-27131	122	T4620-21591	129	T4625-55441	224	T4815-87181002	283
T4115-31341BB	138	T4340-38231	143	T4620-25383	118	T4625-55441	285	T4815-88211	292
T4115-43871	108	T4340-38241	284	T4620-25442	118	T4625-55441	286	T4815-88221	292
T4115-63602	137	T4340-43681	136	T4620-25452	118	T4665-50382	212	T4815-88241	275
T4115-63603	137	T4340-87181	283	T4620-26104	108	T4668-83301	205	T4815-88261	275
T4115-63612	137	T4520-14872	88	T4620-26105	108	T4668-83301	247	T4815-89141	292
T4115-63613	137	T4520-14872	92	T4620-26106	108	T4680-93211	280	T4815-89151	292

https://tractormanualz.com/

PART NO.	PAGE	PART NO.	PAGE	PART NO.	PAGE	PART NO.	PAGE	PART NO.	PAGE
T4815-89162	292	T4935-92502	302	T5520-32523	135	T5710-21114	123	T5710-38313	145
T4815-89163	292	T4938-52351	193	T5520-32532	135	T5710-21115	123	T5710-38411	145
T4815-89171	293	T4938-53551	193	T5520-33012	136	T5710-21116	123	T5710-39031	297
T4815-93211	275	T5210-14721	91	T5520-33051	136	T5710-21153	93	T5710-39031	315
T4815-93211	276	T5210-14812	91	T5520-33081	136	T5710-25411	118	T5710-39202	159
T4815-93211	281	T5210-37311	153	T5520-36571	132	T5710-30091	295	T5710-39211	147
T4815-93211	281	T5210-69401	173	T5520-36572	132	T5710-30091	297	T5710-39221	148
T4815-93211	291	T5210-69731	190	T5520-36591	126	T5710-30091	312	T5710-39701	159
T4815-93211	293	T5210-69731	190	T5520-75171	173	T5710-30091	315	T5710-50011	221
T4818-43451	131	T5210-69741	190	T5520-75191	206	T5710-31122	145	T5710-50012	221
T4818-71221	249	T5210-69741	190	T5520-80391	234	T5710-32101	159	T5710-50013	221
T4818-83001	286	T5210-96305	96	T5520-80391	234	T5710-32511	159	T5710-50014	221
T4833-87141	291	T5210-96305	101	T5520-80391	250	T5710-32601	159	T5710-50023	222
T4835-17241	264	T5210-96305	101	T5520-80531	147	T5710-34001	144	T5710-50024	222
T4835-46591	150	T5235-11051	221	T5520-80531	151	T5710-34202	150	T5710-50025	222
T4835-46591	150	T5245-50231	208	T5520-90071	295	T5710-35101	312	T5710-50026	222
T4835-51232	296	T5245-50231	225	T5520-90071	297	T5710-35101	315	T5710-50031	265
T4835-51232	298	T5245-55461	268	T5521-33011	136	T5710-35111	312	T5710-50041	221
T4835-66532	239	T5245-55462	268	T5521-33011	136	T5710-35111	315	T5710-50042	221
T4835-66532	313	T5248-52101	272	T5525-50435	207	T5710-35121	312	T5710-50061	229
T4835-66532	315	T5248-52102	272	T5525-50435	224	T5710-35121	315	T5710-50072	229
T4835-82431	283	T5250-68771	200	T5525-50721	226	T5710-35131	295	T5710-50221	223
T4835-87621	282	T5250-68771	227	T5525-69313	195	T5710-35131	297	T5710-50231	223
T4836-69251	192	T5250-68771	262	T5525-69803	191	T5710-35142	295	T5710-50252	223
T4836-69252	192	T5270-47072	147	T5525-85231	277	T5710-35142	297	T5710-50263	223
T4837-51242	313	T5270-54501	308	T5525-85302	277	T5710-36001	147	T5710-50264	223
T4837-51242	315	T5270-55171	308	T5525-85311	277	T5710-36022	150	T5710-50411	224
T4837-77774	173	T5270-55172	308	T5525-85321	277	T5710-36023	150	T5710-50412	224
T4850-45161	145	T5270-55241	256	T5525-85331	277	T5710-36102	147	T5710-50421	224
T4850-45161	147	T5270-55411	308	T5525-89411	202	T5710-36112	147	T5710-50422	224
T4850-45161	147	T5270-55491	308	T5525-89421	202	T5710-36121	147	T5710-50423	224
T4876-45162	145	T5290-69942	309	T5525-89451	202	T5710-36131	147	T5710-50424	207
T4930-43601	134	T5310-42561	145	T5525-89452	202	T5710-36211	150	T5710-50424	224
T4930-47071	295	T5310-69031	301	T5525-89461	202	T5710-36511	143	T5710-50451	226
T4930-47071	297	T5315-81251	209	T5525-89471	202	T5710-36601	150	T5710-50461	207
T4930-47071	312	T5315-81251	227	T5525-89481	202	T5710-36612	143	T5710-50461	224
T4930-47071	315	T5315-81251	262	T5535-50451	207	T5710-37121	154	T5710-50472	207
T4930-47091	147	T5410-26161	110	T5535-50451	224	T5710-37132	154	T5710-50472	225
T4930-51351	277	T5410-26171	110	T5535-54221	181	T5710-37181	154	T5710-50481	207
T4930-51361	278	T5410-26181	110	T5535-69281	185	T5710-37212	154	T5710-50481	225
T4930-64301	253	T5410-48081	264	T5535-69931	180	T5710-37221	154	T5710-50492	207
T4930-66731	244	T5410-48081	305	T5535-69931	300	T5710-37222	154	T5710-50492	225
T4930-66741	247	T5410-70211	234	T5535-69941	300	T5710-37231	154	T5710-50502	207
T4930-69911	283	T5410-71122	260	T5535-69951	172	T5710-37241	154	T5710-50502	225
T4930-70492	265	T5410-71142	260	T5535-69951	191	T5710-37281	154	T5710-50612	232
T4930-81321	277	T5520-23651	120	T5535-69961	182	T5710-37301	152	T5710-50613	232
T4930-81331	278	T5520-31533	131	T5535-69961	191	T5710-37302	152	T5710-50614	232
T4930-83082	291	T5520-31542	132	T5535-69961	199	T5710-37441	153	T5710-50631	213
T4935-46941	151	T5520-31562	132	T5535-69961	316	T5710-37511	154	T5710-50631	232
T4935-46941	153	T5520-31572	132	T5565-88201	205	T5710-37521	154	T5710-50812	209
T4935-52011	204	T5520-32041	133	T5620-50291	250	T5710-37571	159	T5710-50812	227
T4935-54212	293	T5520-32051	133	T5620-51642	262	T5710-37631	260	T5710-50812	262
T4935-69971	300	T5520-32512	134	T5638-85721	178	T5710-37961	159	T5710-50831	209
T4935-78112	281	T5520-32513	135	T5638-85721	192	T5710-38031	143	T5710-50831	227
T4935-78122	282	T5520-32522	135	T5710-21113	123	T5710-38131	156	T5710-50831	262

https://tractormanualz.com/

PART NO.	PAGE	PART NO.	PAGE	PART NO.	PAGE	PART NO.	PAGE	PART NO.	PAGE
T5710-50841	262	T5710-51871	205	T5710-54621	260	T5710-80604	250	T5715-21371	99
T5710-50852	262	T5710-51872	205	T5710-54632	303	T5710-80605	250	T5715-21371	105
T5710-50853	209	T5710-51881	266	T5710-54633	303	T5710-80606	250	T5715-21372	99
T5710-50853	227	T5710-51892	266	T5710-54642	303	T5710-80607	250	T5715-21372	105
T5710-50853	262	T5710-51912	233	T5710-54643	303	T5710-80608	250	T5715-21382	99
T5710-51012	210	T5710-51913	233	T5710-54662	259	T5710-80651	250	T5715-21382	105
T5710-51013	210	T5710-51922	233	T5710-54711	259	T5710-80782	250	T5715-21383	99
T5710-51014	210	T5710-51923	233	T5710-55273	264	T5710-80791	250	T5715-21383	105
T5710-51014OE	210	T5710-51932	255	T5710-55274	264	T5710-80841	252	T5715-21442	93
T5710-51022	210	T5710-51933	255	T5710-55274	306	T5710-80852	252	T5715-21443	93
T5710-51023	210	T5710-51951	266	T5710-55281	299	T5710-80861	252	T5715-21444	93
T5710-51024	210	T5710-52031	266	T5710-55311	264	T5710-80871	252	T5715-21445	93
T5710-51053	210	T5710-52032	266	T5710-55311TP	305	T5710-81012	247	T5715-21471	94
T5710-51063	210	T5710-52032	266	T5710-55461	193	T5710-81031	247	T5715-21471	124
T5710-51071	211	T5710-52033	266	T5710-58041	221	T5710-81041	248	T5715-21511	95
T5710-51081	211	T5710-52034	266	T5710-58051	221	T5710-81051	247	T5715-21531	96
T5710-51092	211	T5710-52035	266	T5710-59001	240	T5710-81071	247	T5715-21551	95
T5710-51101	211	T5710-52036	266	T5710-59071	313	T5710-81081	248	T5715-21561	97
T5710-51102	211	T5710-52037	266	T5710-59071	315	T5710-81212	254	T5715-21612	97
T5710-51113	228	T5710-52042	214	T5710-59081	296	T5710-81213	254	T5715-21631	97
T5710-51114	228	T5710-52042	233	T5710-59081	298	T5710-81214	254	T5715-21711	97
T5710-51121	231	T5710-52051	234	T5710-59603	310	T5710-81221	253	T5715-21721	97
T5710-51161	211	T5710-52052	234	T5710-59612	310	T5710-81222	253	T5715-21732	97
T5710-51162	211	T5710-52614	235	T5710-59622	310	T5710-81223	253	T5715-21741	97
T5710-51181	210	T5710-52615	235	T5710-59633	310	T5710-81231	253	T5715-22121	102
T5710-51181	211	T5710-52615OE	235	T5710-69161	170	T5710-81232	253	T5715-22153	102
T5710-51181	211	T5710-52624	235	T5710-69211	186	T5710-A03000601	311	T5715-22154	102
T5710-51181	211	T5710-52624OE	235	T5710-69212	186	T5710-A03000602	311	T5715-22161	102
T5710-51191	228	T5710-52651	235	T5710-69252	187	T5710-A5031	202	T5715-22162	102
T5710-51222	230	T5710-52652	235	T5710-69391	201	T5710-A5032	202	T5715-22612	101
T5710-51251	213	T5710-52653	235	T5710-69471	302	T5710-A5083	310	T5715-22622	101
T5710-51251	230	T5710-52662	235	T5710-69512	198	T5715-14112	88	T5715-22631	101
T5710-51251	232	T5710-52663	235	T5710-69513	198	T5715-14113	88	T5715-22641	101
T5710-51412	256	T5710-52664	235	T5710-69522	198	T5715-14114	88	T5715-22651	101
T5710-51413	256	T5710-52811	243	T5710-69523	198	T5715-14121	88	T5715-22721	101
T5710-51414	256	T5710-53014	237	T5710-69614	170	T5715-14121	92	T5715-23112	105
T5710-51422	256	T5710-53015	237	T5710-69615	170	T5715-14711	91	T5715-23131	106
T5710-51432	256	T5710-53051	237	T5710-69712	190	T5715-21211	98	T5715-23152	106
T5710-51453	257	T5710-53213	238	T5710-69713	190	T5715-21221	98	T5715-23162	106
T5710-51454	257	T5710-53412	239	T5710-69714	190	T5715-21241	98	T5715-23163	106
T5710-51611	246	T5710-53434	239	T5710-69722	190	T5715-21251	98	T5715-23311	103
T5710-51621	246	T5710-53471	239	T5710-69723	190	T5715-21261	98	T5715-23312	103
T5710-51742	240	T5710-54012	313	T5710-69724	190	T5715-21271	98	T5715-23313	103
T5710-51771	248	T5710-54012	315	T5710-69941	181	T5715-21312	98	T5715-23321	103
T5710-51813	265	T5710-54022	313	T5710-69941	301	T5715-21313	98	T5715-23361	103
T5710-51814	265	T5710-54022	315	T5710-69961	175	T5715-21322	99	T5715-23371	103
T5710-51815	265	T5710-54023	313	T5710-80013	244	T5715-21323	99	T5715-23381	103
T5710-51816	265	T5710-54023	315	T5710-80031	244	T5715-21331	99	T5715-23602	119
T5710-51816OE	265	T5710-54032	295	T5710-80041	244	T5715-21331	105	T5715-23603	119
T5710-51817	266	T5710-54032	297	T5710-80221	240	T5715-21341	99	T5715-25211	117
T5710-51831	233	T5710-54051	296	T5710-80232	240	T5715-21341	105	T5715-25221	117
T5710-51832	214	T5710-54051	298	T5710-80413	246	T5715-21342	99	T5715-25231	117
T5710-51832	233	T5710-54051	313	T5710-80422	246	T5715-21342	105	T5715-25262	118
T5710-51841	214	T5710-54051	315	T5710-80602	250	T5715-21361	99	T5715-25263	118
T5710-51841	233	T5710-54601	260	T5710-80603	250	T5715-21361	105	T5715-25281	118

https://tractormanualz.com/

PART NO.	PAGE	PART NO.	PAGE	PART NO.	PAGE	PART NO.	PAGE	PART NO.	PAGE
T5715-25332	118	T5715-44521	116	T5715-80815	252	T5715-88031	307	T5755-59061	241
T5715-25333	118	T5715-44522	116	T5715-83011	287	T5715-88041	307	T5755-59072	241
T5715-25461	121	T5715-44531	116	T5715-83012	287	T5715-89011	283	T5755-68502	199
T5715-25612	120	T5715-44561	116	T5715-83022	287	T5715-A5011	205	T5755-69171	191
T5715-25762	120	T5715-44571	116	T5715-83023	287	T5715-A5021	303	T5755-69172	191
T5715-25901	118	T5715-44582	116	T5715-83111	287	T5715-A5022	303	T5755-69173	191
T5715-26111	107	T5715-44611	116	T5715-83112	287	T5715-A5041	219	T5755-69342	301
T5715-26561	110	T5715-44621	116	T5715-83113	287	T5715-A5071	220	T5755-69361	191
T5715-26571	110	T5715-44631	116	T5715-83121	287	T5715-A6023	312	T5755-69383	199
T5715-26591	110	T5715-44651	116	T5715-83122	287	T5715-A6025	312	T5755-69384	199
T5715-26631	111	T5715-45201	137	T5715-83123	287	T5715-A6026	312	T5755-69385	199
T5715-26671	113	T5715-45201012	137	T5715-83131	287	T5715-A6027	312	T5755-69386	199
T5715-26672	113	T5715-51131	210	T5715-83132	287	T5715-A6033	314	T5755-69387	199
T5715-26682	111	T5715-51141	212	T5715-83133	287	T5715-A6036	314	T5755-69388	199
T5715-26712	113	T5715-51151	212	T5715-83141	287	T5715-A6037	314	T5755-69389	199
T5715-26713	114	T5715-51733	240	T5715-83142	287	T5715-A6042	295	T5755-6938A	199
T5715-26722	114	T5715-51821	219	T5715-83143	287	T5715-A6043	295	T5755-69391	184
T5715-26723	114	T5715-51822	307	T5715-83241	287	T5715-A6044	295	T5755-69423	199
T5715-27111	114	T5715-51871	266	T5715-83251	288	T5715-A6045	295	T5755-69424	199
T5715-27112	114	T5715-52411	215	T5715-84001	275	T5715-A6052	297	T5755-69425	199
T5715-27131	114	T5715-52411001	215	T5715-84011	275	T5715-A6053	297	T5755-69426	199
T5715-28133	114	T5715-52411002	215	T5715-84021	275	T5715-A6054	297	T5755-69512	163
T5715-28134	114	T5715-52411004	215	T5715-84031	275	T5715-A6055	297	T5755-69522	163
T5715-28135	114	T5715-52412	215	T5715-84041	275	T5715-A8812	307	T5755-69571	163
T5715-28136	114	T5715-53212	238	T5715-84051	275	T5715-A8813	307	T5755-69851	181
T5715-28143	114	T5715-53471	239	T5715-84061	275	T5718-51031	210	T5755-69861	181
T5715-28144	114	T5715-53511	249	T5715-84071	275	T5718-51032	210	T5755-77511	301
T5715-28145	114	T5715-53531	249	T5715-85101	277	T5718-51041	210	T5755-A7012	181
T5715-28146	114	T5715-53551	249	T5715-85111	277	T5718-51042	210	T5755-A7052	301
T5715-28222	112	T5715-53571	239	T5715-85121	277	T5718-52013	266	T5755-A7062	300
T5715-28242	112	T5715-53611	241	T5715-85131	277	T5718-52014	266	T5758-55451	203
T5715-28243	112	T5715-54632	258	T5715-85151	277	T5718-52015	266	T5758-68351	165
T5715-28252	112	T5715-54811	261	T5715-85201	278	T5718-52016	267	T5758-68351	179
T5715-28253	112	T5715-55011	269	T5715-85211	278	T5718-52037	266	T5758-69251	189
T5715-28272	112	T5715-55021	269	T5715-85221	278	T5718-85181	278	T5758-69341	162
T5715-28282	112	T5715-55202	263	T5715-85251	278	T5730-69012	185	T5758-69341	175
T5715-28321	114	T5715-55233	263	T5715-85511	280	T5730-69013	185	T5758-69351	183
T5715-32313	160	T5715-55234	263	T5715-85521	280	T5730-69014	185	T5758-69471	189
T5715-32401	159	T5715-55236	263	T5715-85531	280	T5730-69015	185	T5758-69491	189
T5715-35672	145	T5715-55237	263	T5715-85551	280	T5730-69016	185	T5758-A7021	299
T5715-37113	153	T5715-55254	263	T5715-85561	280	T5738-55202	305	T5758-A7041	302
T5715-37114	153	T5715-55255	263	T5715-86011	281	T5738-55232	305	T5758-A7072	162
T5715-37115	153	T5715-55257	263	T5715-86021	281	T5738-55253	305	T5815-55291	246
T5715-37116	153	T5715-55258	263	T5715-86031	281	T5738-55262	305	T5855-50542	212
T5715-37117	153	T5715-55411	203	T5715-86101	281	T5738-55291	305	T8105-75770	136
T5715-37562	159	T5715-55431	203	T5715-86511	286	T5750-53031	237	TB16-0127B	306
T5715-38211	145	T5715-80002	307	T5715-86521	286	T5750-53032	237	TB25-0009A	176
T5715-38802	157	T5715-80021	274	T5715-87021	291	T5750-80251	240	TB25-0010A	176
T5715-39401	160	T5715-80022	274	T5715-87031	291	T5750-81091	247	TB35-A0005A	308
T5715-42142	126	T5715-80023	274	T5715-87511	284	T5755-28211	112	TC24-0164A	155
T5715-43211	133	T5715-80211	240	T5715-87521	284	T5755-51071	212	TC24-0238A	295
T5715-43221	133	T5715-80603	251	T5715-87531	284	T5755-51072	212	TC24-0238A	297
T5715-43312	132	T5715-80681	251	T5715-87541	284	T5755-53231	238	TC24-0238A	312
T5715-43332	132	T5715-80691	252	T5715-88011	307	T5755-53232	238	TC24-0238A	314
T5715-44511	116	T5715-80814	252	T5715-88021	307	T5755-59041	241	TC26-0382A	316

https://tractormanualz.com/

PART NO.	PAGE	PART NO.	PAGE	PART NO.	PAGE	PART NO.	PAGE	PART NO.	PAGE
TC26-0383A	291	TD24-0159A	312	TD26-1188A	207				
TC26-0388A	193	TD24-0159A	315	TD26-A0018C	305				
TC26-1298A	259	TD24-0179A	144	TD26-A0022A	271				
TC26-1689A	269	TD24-0202A	150	TE15-0112A	166				
TC26-1690A	269	TD24-0204A	145	TF14-0122A	313				
TC26-1717B	264	TD24-0208A	145	TF14-0122A	314				
TC26-1718A	216	TD24-0249A	145	TF14-0123A	295				
TC26-1718B	216	TD24-0253A	150	TF14-0123A	297				
TC26-1718C	216	TD24-0253A	150	TF15-0001A	309				
TC26-1769A	216	TD25-0015A	192	TF15-0002C	309				
TC26-1769B	216	TD25-0052A	191	TG14-0137A	153				
TC26-1772A	216	TD25-0055A	177	TG15-0046A	308				
TC26-1773A	216	TD25-0056A	177	TG15-0047A	308				
TC26-1774A	216	TD25-0090A	161	TG15-0048A	308				
TC26-1774B	216	TD25-0092A	186	TG15-0243A	292				
TC26-1776A	216	TD25-0092B	186	TG16-0379A	284				
TC26-1778A	216	TD25-0105C	182	TG16-1530A	193				
TC26-1780A	216	TD25-0105D	182	TG16-1530B	194				
TC26-1781A	216	TD25-0106A	182	TG16-1540A	194				
TC26-1782A	294	TD25-0114B	174	TG35-0114A	206				
TC26-1783A	294	TD25-0140A	189	TG36-1251A	284				
TC26-1784A	216	TD26-0006A	180	U3215-77501	208				
TC26-1786A	216	TD26-0006A	300						
TC26-1787A	216	TD26-0007A	300						
TC26-1788A	216	TD26-0008A	208						
TC26-1789A	217	TD26-0008A	225						
TC26-1790A	217	TD26-0009A	288						
TC26-1791A	294	TD26-0035A	289						
TC26-1791A	294	TD26-0036A	289						
TC26-1792A	217	TD26-0042A	289						
TC26-1834A	217	TD26-0044A	291						
TC26-A0113A	294	TD26-0044B	291						
TC26-A0114A	294	TD26-0046A	307						
TD22-0001A	102	TD26-0121A	305						
TD22-0084A	119	TD26-0148A	270						
TD22-0085A	94	TD26-0151A	270						
TD22-0089A	109	TD26-0151A	271						
TD22-0108A	92	TD26-0152A	271						
TD22-0110A	112	TD26-0567A	258						
TD22-0111A	112	TD26-0759A	306						
TD22-0128A	118	TD26-0916A	263						
TD22-0129A	104	TD26-0916B	263						
TD23-0005A	129	TD26-0936A	204						
TD23-0006A	130	TD26-0936B	204						
TD23-0007A	129	TD26-0967A	288						
TD23-0046A	135	TD26-1009A	194						
TD23-0046B	135	TD26-1009B	194						
TD23-0047A	135	TD26-1021A	251						
TD23-0047B	135	TD26-1088A	209						
TD24-0001A	159	TD26-1088A	227						
TD24-0002A	160	TD26-1095A	266						
TD24-0008A	155	TD26-1139A	213						
TD24-0125A	154	TD26-1140A	214						
TD24-0159A	295	TD26-1141A	214						
TD24-0159A	297	TD26-1144A	211						

https://tractormanualz.com/

INDEX 2

https://tractormanualz.com/

PARTS GROUP	GROUP NO.	PAGE	PARTS GROUP	GROUP NO.	PAGE
<CABIN>			LEVER GUIDE(ROPS) GROUP	TD2-G637003	235
CABIN GROUP	TD200C-G820A	274	LIFT ROD GROUP	TD2-G684003	261
DOOR GROUP	TD200C-G830A	277	LOWER LINK GROUP	TD2-G681003	258
FRONT GLASS GROUP	TD200C-G825A	275	MAIN SHIFT LEVER GROUP	TD2-G640101	237
HEATER GROUP	TD200C-G855A	284	MUFFLER GROUP	TD2-G612002	223
JOYSTICK VALVE GROUP	TD2-G6H1002	289	RADIATOR GROUP	TD2-G612509	207
MOUNTING GROUP	TD200C-G870A	287	RADIATOR GROUP	TD2-G612501	224
OPTION GROUP	TD200C-G865A	286	RANGE SHIFT LEVER GROUP	TD2-G640502	238
REAR GLASS GROUP	TD200C-G840A	281	RANGE SHIFT LEVER GROUP	TD2-G641002	239
ROOF GROUP	TD2-G6C2502	290	REAR VIEW MIRROR GROUP	TD2-G6F4503	205
SIDE GLASS GROUP	TD200C-G835A	280	ROPS BAR GROUP	TD2-G631002	263
WIPER MOTOR GROUP	TD200C-G850A	283	SEAT GROUP	TD2-G661002	215
WIPER(REAR) GROUP(OPTION)	TC2-G223002	292	SEAT GROUP	TD2-G661010	216
<CHASSIS>			SHUTTLE LEVER GROUP	TD2-G644002	240
ACCELERATOR LEVER GROUP	TD2-G648102	247	SMV BRACKET GROUP	TD2-G6F0502	273
ACCELERATOR PEDAL GROUP	TD2-G648201	248	STEERING COLUMN COVER GROUP	TD2-G654001	253
ACCESSORIES_SERVICE PARTS GROUP	TD2-G6F9003	206	STEERING WHEEL GROUP	TD2-G651002	268
AIR CLEANER GROUP	TD2-G611001	221	STEP MAT GROUP	TD2-G662002	218
AIR CLEANER SUPPORT GROUP	TD2-G611202	222	STEP MAT GROUP	TD2-G662003	219
AUXLIARY STEP GROUP	TD2-G663001	255	STEP SEAT FRAME GROUP	TD2-G633002	265
BATTERY FIXING GROUP	TD2-G617001	230	TOP LINK GROUP	TD2-G683001	260
BONNET GROUP	TD2-G615502	210	TOWING GROUP	TD2-G694004	220
BONNET LATCH GROUP	TD2-G616101	229	TOWING GROUP	TD2-G694008	271
BONNET SUPPORT GROUP	TD2-G616001	228	VIBRATIONPROOF RUBBER GROUP	TD2-G624001	234
BRAKE PEDAL GROUP	TD2-G646501	245	**<ELECTRICAL>**		
CABIN SUPPORT GROUP	TD2-G623007	214	7 PIN SOCKET GROUP	TD2-G525507	180
CABIN SUPPORT GROUP	TD2-G623001	233	ALTERNATOR GROUP	TD2-G514001	171
CHECK LINK GROUP	TD2-G682002	259	BATTERY GROUP	TD2-G513501	170
CLUTCH PEDAL GROUP	TD2-G646001	244	DISPLAY CONTROL GROUP	TD2-G533001	185
COOLANT RESERVIOR GROUP	TD2-G612701	226	DOUBLE ACTING VALVE LEVER GROUP	TD2-G531003	199
DIFFERENTIAL PEDAL GROUP	TD2-G645501	243	ELECTRICAL SYSTEM GROUP	TD200C-G860A	191
DRAWBAR GROUP	TD2-G692001	269	ENGINE ELECTRICAL GROUP(1)	TD2-G511002	166
ECU BRACKET GROUP	TD2-G617201	231	ENGINE ELECTRICAL GROUP(1)	TD2-G511001	195
EXTERNAL POSITION ADJUSTING LEVER	TD2-G648501	249	ENGINE ELECTRICAL GROUP(2)	TD2-G511502	161
FRONT AXLE FRAME GROUP	TD2-G621009	213	ENGINE ELECTRICAL GROUP(2)	TD2-G511503	167
FRONT AXLE FRAME GROUP	TD2-G621001	232	ENGINE ELECTRICAL GROUP(2)	TD2-G511501	196
FRONT WEIGHT GROUP(OPTION)	TD2-G6A2002	202	ENGINE ELECTRICAL GROUP(3)	TD2-G512001	168
FRONT WHEEL DRIVE LEVER GROUP	TD2-G644501	241	FRONT WORKING LAMP GROUP(OPTION)	TD2-G526002	181
FUEL COOLER GROUP	TD2-G614505	209	FUEL HEATER GROUP	TD2-G516002	175
FUEL COOLER GROUP	TD2-G614503	227	FUEL HEATER OPTION GROUP	TD2-G516001	162
FUEL COOLER GROUP	TD2-G614501	262	FUEL SENDER GROUP	TD2-G533501	186
FUEL TANK GROUP	TD2-G671001	256	GLOW CONTROL GROUP	TD2-G514501	172
HAND PARKING BRAKE GROUP	TD2-G645201	242	HEAD LAMP WIRE HARNESS GROUP	TD2-G532502	184
INSTRUMENT COVER GROUP	TD2-G655001	254	HEAD LAMP WIRE HARNESS GROUP	TD2-G532501	201
INSTRUMENT PANEL FRAME GROUP	TD2-G652001	250	HEAD LIGHT GROUP	TD2-G521002	163
INSTRUMENT PANEL FRAME GROUP	TD2-G653002	252	HEAD LIGHT GROUP	TD2-G521001	198
LABEL(BONNET COVER) GROUP	TD2-G6D1014	203	HORN GROUP	TD2-G534502	188
LABEL(FRAME) GROUP	TD2-G6D4002	272	LABEL(MAIN/ETC) GROUP	TD2-G6D3002	193
LABEL(MFG CERTIFICATE) GROUP	TD2-G6D2011	204	LIGHT CONTROL GROUP	TD2-G525002	165

https://tractormanualz.com/

PARTS GROUP	GROUP NO.	PAGE	PARTS GROUP	GROUP NO.	PAGE
LIGHT CONTROL GROUP	TD2-G525004	179	Piston & Connecting rod Group	F5800-G070A	18
NEUTRAL WIRE HARNESS GROUP	TD2-G531702	183	Rocker Arm & Valve Group	F5800-G110A	23
POWER SOCKET GROUP	TD2-G531501	200	Turbo Charger Group	F5800-G240A	39
PTO CONTROL GROUP	TD2-G534002	187	TURBO PIPE GROUP	F5800-G245A	40
REAR COMBINATION LAMP GROUP	TD2-G522502	177	Water flange Group	F5830-G130A	26
REAR COMBINATION LAMP GROUP	TD2-G522501	190	WATER PUMP GROUP	F6800-G140A	28
REFLECTOR GROUP	TD2-G524003	178	**<FRONT AXLE>**		
SAFETY STARTER GROUP	TD2-G515503	174	BEVEL GEAR CASE GROUP	TD2-G314001	131
START CONTROL GROUP	TD2-G515002	173	BEVEL GEAR SHAFT GROUP	TD2-G315001	133
STARTER MOTOR GROUP	TD2-G513003	169	BEVEL PINION SHAFT GROUP	T5520-G310A	125
STARTER MOTOR GROUP	TD2-G513001	197	BEVEL PINION SHAFT GROUP	TD2-G313002	129
TIER4 CONTROL GROUP	TD2-G535001	189	FRONT AXLE BRACKET GROUP	TD2-G332001	139
TURN SIGNAL LAMP GROUP	TD2-G522001	164	FRONT AXLE CASE GROUP	TD2-G316001	134
TURN SIGNAL LAMP GROUP	TD2-G522002	176	FRONT AXLE GROUP	TD2-G317001	136
WIRE HARNESS GROUP	TD2-G531024	182	FRONT AXLE SUPPORT GROUP	TD2-G311001	126
<ENGINE>			FRONT DIFF SYSTEM GROUP	TD2-G312001	127
Aftertreatment Group	F5830-G250A	41	FRONT WHEEL GROUP	TD2-G341004	142
CAMSHAFT GROUP	F5800-G090A	19	PROPELLER SHAFT GROUP	TD2-G331001	141
COOLING FAN GROUP	TD2-G112007	2	STEERING CYLINDER COVER GROUP	TD2-G322001	138
COOLING FAN GROUP	F5830-G230A	38	STEERING CYLINDER GROUP	TD2-G321001	137
CRANK SHAFT GROUP	F5800-G060A	17	**<HYDRAULIC>**		
CYLINDER BLOCK GROUP	F5800-G010A	4	EXTERNAL DRAW VALVE GROUP	TD2-G442004	149
CYLINDER HEAD COVER GROUP	F5830-G150A	29	GEAR PUMP GROUP	TD2-G412001	144
CYLINDER HEAD GROUP	F5830-G030A	8	HYDRAULIC BLOCK GROUP	TD2-G443001	150
ECU & Sensors Group	F5800-G260A	42	HYDRAULIC CYLINDER GROUP	TD2-G463003	153
EGR Cooler Group	F5800-G200A	35	HYDRAULIC CYLINDER GROUP	TD2-G463501	154
EGR GROUP	F5830-G175A	32	HYDRAULIC CYLINDER GROUP	TD2-G464001	156
Electric part Group	F5800-G270A	43	HYDRAULIC SYSTEM GROUP(1)	TD2-G465502	159
ENGINE LABEL GROUP	TD2-G118009	3	LIFT CONTROL VALVE(MEC) GROUP	TD2-G461001	152
EPA EEC LABEL GROUP	F5805-G310A	44	MODULATE VALVE GROUP	TD2-G421007	145
EPA EEC LABEL GROUP	EF1-G132002	49	OIL INLET TUBE GROUP	TD2-G465001	158
EXHAUST MANIFOLD GROUP	F5800-G190A	34	POWER STEERING UNIT GROUP	TD2-G431001	147
FLYWHEEL GROUP	F5810-G220A	37	SUCTION LINE GROUP	TD2-G411001	143
Flywheel_housing Group	F5831-G210A	36	TOP LINK DEVICE GROUP	TD2-G464502	157
Fuel Equipment Group	F5830-G120A	24	**<OPTION>**		
Fuel Filter & Pipe Group	F5830-G160B	30	7 PIN SOCKET GROUP	TD2-G525503	300
GAUGE,OIL GROUP	F6800-G025A	7	ARM REST GROUP(OPTION)	TC2-G6G4101	294
GEAR CASE GROUP	F5800-G040A	10	CD PLAYER GROUP(OPTION)	CK30C-T2200A	308
GEAR CASE GROUP	F5800-G040B	12	FRONT ROPS GROUP(OPTION)	TD2-G632001	305
Gearcase Cover Group	F6800-G045A	15	FRONT WORKING LAMP GROUP(OPTION)	TD2-G526501	301
IDLE GEAR GROUP	F6800-G100A	20	HYDRAULIC BLOCK GROUP	TD2-G446003	295
INLET MANIFOLD GROUP	F5830-G170A	31	HYDRAULIC BLOCK GROUP	TD2-G446004	297
Intake Pipe Group	F5830-G180A	33	HYDRAULIC BLOCK GROUP	TD2-G446001	312
LABEL GROUP	EH2-G181005	1	HYDRAULIC BLOCK GROUP	TD2-G446002	314
LABEL GROUP	F6805-G320A	46	Interior material group(option)	TD200C-G880A	307
OIL FILTER GROUP	F6800-G050A	16	LOWER LINK GROUP	TD2-G681005	303
OIL GAUGE GROUP	EF2-G102501	47	OPTIONAL LAMP GROUP	TC2-G591002	316
OIL GAUGE GROUP	EF3-G102502	48	POWER SOCKET GROUP	TD2-G527002	302
OILPAN GROUP	F5800-G020A	6	REAR WEIGHT GROUP	TD2-G6A3001	311

https://tractormanualz.com/

PARTS GROUP	GROUP NO.	PAGE	PARTS GROUP	GROUP NO.	PAGE
REAR WORKING LAMP GROUP	TD2-G523002	299	PTO CLUTCH GROUP	TD2-G2C3001	119
SUNSHADE GROUP	TD2-G6G0701	310	PTO INPUT SHAFT GROUP	TD2-G2C1001	117
<STAGE5>			PTO SHAFT GROUP	TD2-G2C4002	118
AFTERTREATMENT GROUP	TD2-G115001	85	PTO SHIFT FORK GROUP	TD2-G2C5002	121
CAMSHAFT GROUP	EH2-G123001	59	RANGE SHIFT FORK GROUP	TD2-G272002	105
COOLING FAN GROUP	TD2-G112001	84	RANGE SHIFT SHAFT GROUP	TD2-G271002	103
CRANK SHAFT FULLEY GROUP	EH2-G127002	64	REAR AXLE GROUP	TD2-G2A1001	113
CRANK SHAFT GROUP	EH2-G121001	57	REAR DIFFERENTIAL GROUP	TD2-G282001	108
CYLINDER BLOCK GROUP	EH2-G111001	50	REAR DIFFERENTIAL LOCK GROUP	TD2-G283001	111
CYLINDER HEAD COVER GROUP	EH2-G116001	55	REAR WHEEL GROUP	TD2-G2G1002	122
CYLINDER HEAD GROUP	EH2-G113001	51	SHUTTLE SHAFT GROUP	TD2-G251001	100
ECU GROUP	TD2-G119001	87	SHUTTLE SHIFT FORK GROUP	TD2-G252001	102
EGR COOLER GROUP	EH2-G172001	80	SPIRAL BEVEL PINION SHAFT GROUP	TD2-G281002	107
EGR GROUP	EH2-G171001	79	TRANSMISSION CASE GROUP	TD2-G224004	94
EXHAUST MANIFOLD GROUP	EH2-G133001	67	TRANSMISSION CASE GROUP	TD2-G224001	123
FLYWHEEL GROUP	EH2-G126001	63			
FLYWHEEL HOUSING GROUP	EH2-G117001	56			
FUEL EQUIPMENT GROUP	EH2-G151001	74			
FUEL FILTER GROUP	TD2-G117001	82			
GEAR CASE COVER GROUP	EH2-G115001	54			
GEAR CASE GROUP	EH2-G114001	52			
GLOW PLUG GROUP	EH2-G191001	81			
IDLE GEAR GROUP	EH2-G124001	60			
INTAKE HOSE GROUP	EH2-G132002	66			
INTAKE MANIFOLD GROUP	EH2-G131001	65			
INTAKE PIPE GROUP	TD2-G113001	83			
MANUFACTURING LABEL GROUP	TD2-G118004	86			
OIL FILTER GROUP	EH2-G144001	73			
OIL GAUGE GROUP	EH2-G143001	72			
OIL JET GROUP	EH2-G161001	76			
OIL PAN GROUP	EH2-G142001	71			
OIL PUMP GROUP	EH2-G141001	70			
PISTON_CONNECTING ROD GROUP	EH2-G122001	58			
ROCKER ARM_VALVE GROUP	EH2-G125001	62			
TURBO GROUP	EH2-G134001	68			
TURBO PIPE GROUP	EH2-G135001	69			
WATER FLANGE GROUP	EH2-G162001	77			
WATER PUMP GROUP	EH2-G163001	78			
<TRANSMISSION>					
BRAKE GROUP	TD2-G293003	112			
CLUTCH GROUP	TD2-G211001	90			
CLUTCH HOUSING GROUP	TD2-G222002	88			
CLUTCH HOUSING GROUP	TD2-G222005	92			
CLUTCH RELEASE GROUP	TD2-G212001	91			
DRIVE SHAFT GROUP	TD2-G232001	95			
FRONT WHEEL DRIVE SHAFT GROUP	TD2-G2B1002	115			
MAIN SHIFT FORK GROUP	TD2-G242001	98			
MAIN SHIFT SHAFT GROUP	TD2-G241001	96			
MID CASE GROUP	TD2-G223001	93			

https://tractormanualz.com/