TABLE OF CONTENTS

[ENGINE]

EF2-G101001	CYLINDER BLOCK GROUP	1
EF2-G102001	OIL PAN GROUP	2
EF2-G103001	CYLINDER HEAD GROUP	3
EF2-G104001	GEAR CASE GROUP	4
EF2-G104501	GEAR CASE COVER GROUP	6
EF2-G105001	OIL FILTER GROUP	7
EF2-G106001	CRANK SHAFT GROUP	8
EF2-G107001	PISTON_CONNECTING ROD GROUP	9
EF2-G109001	CAMSHAFT GROUP	10
EF2-G110001	IDLE GEAR GROUP	11
EF2-G111001	ROCKER ARM_VALVE GROUP	13
EF2-G111501	FUEL EQUIPMENT GROUP	14
EF2-G114003	WATER FLANGE GROUP	15
EF2-G115001	WATER PUMP GROUP	16
EF2-G116001	CYLINDER HEAD COVER GROUP	17
EF2-G117003	FUEL FILTER GROUP	18
EF2-G118001	INTAKE MANIFOLD GROUP	19
EF2-G119001	EGR GROUP	20
EF2-G120003	INTAKE HOSE GROUP	21
EF2-G121003	EXHAUST MANIFOLD GROUP	22
EF2-G122003	EGR COOLER GROUP	23
EF2-G123001	FLYWHEEL HOUSING GROUP	24
EF2-G124003	FLYWHEEL GROUP	25
EF2-G127003	TURBO CHARGER GROUP	26
EF2-G127004	CRANK SHAFT FULLEY GROUP	27
EF2-G128001	TURBO PIPE GROUP	28
EF2-G129001	AFTER TREATMENT GROUP	29
EF2-G130001	ECU GROUP	30
EF2-G133505	ELECTRICAL PARTS GROUP	31
EF2-G156003	FUEL FILTER GROUP	32
EF2-G164001	COOLING FAN GROUP	33
EF3-G156001	FUEL FILTER GROUP	34
TD2-G112007	COOLING FAN GROUP	35
TD2-G118009	ENGINE LABEL GROUP	36
F5805-G310A	EPA EEC LABEL GROUP	37

https://tractormanualz.com/

F6805-G320A	LABEL GROUP	38
EF2-G102501	OIL GAUGE GROUP	39
TD2-G113002	INTAKE PIPE GROUP	40

[STAGE5]

EH2-G111001	CYLINDER BLOCK GROUP	41
EH2-G113001	CYLINDER HEAD GROUP	42
EH2-G114001	GEAR CASE GROUP	43
EH2-G115001	GEAR CASE COVER GROUP	45
EH2-G116001	CYLINDER HEAD COVER GROUP	46
EH2-G117001	FLYWHEEL HOUSING GROUP	47
EH2-G121001	CRANK SHAFT GROUP	48
EH2-G122001	PISTON_CONNECTING ROD GROUP	49
EH2-G123001	CAMSHAFT GROUP	50
EH2-G124001	IDLE GEAR GROUP	51
EH2-G125001	ROCKER ARM_VALVE GROUP	53
EH2-G126002	FLYWHEEL GROUP	54
EH2-G127003	CRANK SHAFT FULLEY GROUP	55
EH2-G131001	INTAKE MANIFOLD GROUP	56
EH2-G132003	INTAKE HOSE GROUP	57
EH2-G133001	EXHAUST MANIFOLD GROUP	58
EH2-G134001	TURBO GROUP	59
EH2-G135001	TURBO PIPE GROUP	60
EH2-G141001	OIL PUMP GROUP	61
EH2-G142001	OIL PAN GROUP	62
EH2-G143001	OIL GAUGE GROUP	63
EH2-G144001	OIL FILTER GROUP	64
EH2-G151001	FUEL EQUIPMENT GROUP	65
EH2-G161001	OIL JET GROUP	67
EH2-G162003	WATER FLANGE GROUP	68
EH2-G163001	WATER PUMP GROUP	69
EH2-G171001	EGR GROUP	70
EH2-G172001	EGR COOLER GROUP	71
EH2-G191001	GLOW PLUG GROUP	72
TD2-G118001	MANUFACTURING LABEL GROUP	73
TD2-G113001	INTAKE PIPE GROUP	74
TD2-G112001	COOLING FAN GROUP	75

https://tractormanualz.com/

TD2-G115001	AFTERTREATMENT GROUP	76
TD2-G117001	FUEL FILTER GROUP	77
TD2-G119001	ECU GROUP	78

[TRANSMISSION]

TD2-G211003	CLUTCH GROUP	79
TD2-G221002	FRONT COVER GORUP	80
TD2-G222003	CLUTCH HOUSING GROUP	81
TD2-G223003	MID CASE GROUP	82
TD2-G224003	TRANSMISSION CASE GROUP	83
TD2-G232003	DRIVE SHAFT GROUP	84
TD2-G271003	RANGE SHIFT SHAFT GROUP	86
TD2-G272003	RANGE SHIFT FORK GROUP	88
TD2-G281003	SPIRAL BEVEL PINION SHAFT GROUP	90
TD2-G282001	REAR DIFFERENTIAL GROUP	91
TD2-G283002	REAR DIFF LOCK GROUP	93
TD2-G293002	BRAKE GROUP	94
TD2-G2A1001	REAR AXLE GROUP	95
TD2-G2C5002	PTO SHIFT FORK GROUP	97
TD2-G2G1002	REAR WHEEL GROUP	98
TD2-G2B1003	FRONT WHEEL DRIVE SHAFT GROUP	99
TD2-G2C1002	PTO INPUT SHAFT GROUP	101
TD2-G2C3002	PTO CLUTCH GROUP	102
TD2-G2C4006	PTO SHAFT GROUP	103
TD2-G2F1001	MID PTO SHAFT GROUP	105

[FRONT AXLE]

TD2-G311002	FRONT AXLE SUPPORT GROUP	106
TD2-G332002	FRONT AXLE BRACKET GROUP	107
TD2-G312001	FRONT DIFF SYSTEM GROUP	108
TD2-G313002	BEVEL PINION SHAFT GROUP	110
TD2-G314001	BEVEL GEAR CASE GROUP	111
TD2-G315001	BEVEL GEAR SHAFT GROUP	113
TD2-G316001	FRONT AXLE CASE GROUP	114
TD2-G317001	FRONT AXLE GROUP	116
TD2-G321001	STEERING CYLINDER GROUP	117
TD2-G322001	STEERING CYLINDER COVER GROUP	118

https://tractormanualz.com/

TD2-G331001	PROPELLER SHAFT GROUP	119
TD2-G341004	FRONT WHEEL GROUP	120

[HYDRAULIC]

TD2-G411003	SUCTION LINE GROUP	121
TD2-G412003	GEAR PUMP GROUP	122
TD2-G413003	COOLING SYSTEM GROUP	123
TD2-G421009	MODULATE VALVE GROUP	124
TD2-G422001	HST ASSY GROUP	125
TD2-G423001	HST HYDRAULIC LINE GROUP	131
TD2-G431003	POWER STEERING UNIT GROUP	132
TD2-G442007	EXTERNAL DRAW VALVE GROUP	133
TD2-G443005	HYDRAULIC BLOCK GROUP	134
TD2-G461001	LIFT CONTROL VALVE(MEC) GROUP	135
TD2-G463003	HYDRAULIC CYLINDER GROUP	136
TD2-G463501	HYDRAULIC CYLINDER GROUP	137
TD2-G464001	HYDRAULIC CYLINDER GROUP	138
TD2-G464502	TOP LINK DEVICE GROUP	139
TD2-G465001	OIL INLET TUBE GROUP	140
TD2-G465502	HYDRAULIC SYSTEM GROUP(1)	141

[ELECTRICAL]

TD2-G511502	ENGINE ELECTRICAL GROUP(2)	143
TD2-G516001	FUEL HEATER OPTION GROUP	144
TD2-G524002	REFLECTOR GROUP	145
TD2-G531011	WIRE HARNESS GROUP	146
TD2-G511002	ENGINE ELECTRICAL GROUP(1)	147
TD2-G511503	ENGINE ELECTRICAL GROUP(2)	148
TD2-G512001	ENGINE ELECTRICAL GROUP(3)	149
TD2-G513003	STARTER MOTOR GROUP	150
TD2-G513504	BATTERY GROUP	151
TD2-G514001	ALTERNATOR GROUP	152
TD2-G514501	GLOW CONTROL GROUP	153
TD2-G515003	START CONTROL GROUP	154
TD2-G515503	SAFETY STARTER GROUP	155
TD2-G516002	FUEL HEATER GROUP	156
TD2-G522002	TURN SIGNAL LAMP GROUP	157

https://tractormanualz.com/

TD2-G522502	REAR COMBINATION LAMP GROUP	158
TD2-G525003	LIGHT CONTROL GROUP	159
TD2-G525506	7 PIN SOCKET GROUP(SAE)	160
TD2-G531503	WIRE HARNESS FIXING GROUP	161
TD2-G533006	DISPLAY CONTROL GROUP	162
TD2-G533503	FUEL SENDER GROUP	163
TD2-G534002	PTO CONTROL GROUP	164
TD2-G534502	HORN GROUP	165
TD2-G535001	TIER4 CONTROL GROUP	166
TD2-G511001	ENGINE ELECTRICAL GROUP(1)	167
TD2-G513001	STARTER MOTOR GROUP	168
TD2-G521001	HEAD LIGHT GROUP	169
TD2-G532501	HEAD LAMP WIRE HARNESS GROUP	170

[CHASSIS]

TD2-G6A2002	FRONT WEIGHT GROUP(OPTION)	171
TD2-G6D1043	LABEL(BONNET COVER) GROUP	172
TD2-G6D2009	LABEL(MFG CERTIFICATE) GROUP	173
TD2-G6D3015	LABEL(MAIN/ETC) GROUP	174
TD2-G6F4503	REAR VIEW MIRROR GROUP	176
TD2-G6F9004	ACCESSORIES_SERVICE PARTS GROUP	177
TD2-G611009	AIR CLEANER GROUP	178
TD2-G612512	RADIATOR GROUP	179
TD2-G614502	FUEL COOLER GROUP	181
TD2-G614506	FUEL COOLER GROUP	182
TD2-G615505	BONNET GROUP	183
TD2-G631010	ROPS BAR GROUP	185
TD2-G633007	STEP SEAT FRAME GROUP	187
TD2-G647602	HST CONTROL GROUP	189
TD2-G661010	SEAT GROUP	192
TD2-G692004	DRAWBAR GROUP	194
TD2-G611211	AIR CLEANER SUPPORT GROUP	196
TD2-G612002	MUFFLER GROUP	198
TD2-G612506	RADIATOR GROUP(ROPS)	199
TD2-G612701	COOLANT RESERVIOR GROUP	201
TD2-G614504	FUEL COOLER GROUP	202
TD2-G616006	BONNET SUPPORT GROUP	203

https://tractormanualz.com/

TD2-G616103	BONNET LATCH GROUP	204
TD2-G617003	BATTERY FIXING GROUP	205
TD2-G617205	ECU BRACKET GROUP	206
TD2-G621005	FRONT AXLE FRAME GROUP	207
TD2-G623003	CABIN SUPPORT GROUP	208
TD2-G624001	VIBRATIONPROOF RUBBER GROUP	209
TD2-G637003	LEVER GUIDE(ROPS) GROUP	210
TD2-G640504	RANGE SHIFT LEVER GROUP	212
TD2-G641002	RANGE SHIFT LEVER GROUP	213
TD2-G641502	RANGE SHIFT LEVER GROUP	214
TD2-G644503	FRONT WHEEL DRIVE LEVER GROUP	215
TD2-G645202	PARKING BRAKE LEVER GROUP	216
TD2-G645501	DIFFERENTIAL PEDAL GROUP	217
TD2-G646503	BRAKE PEDAL GROUP	218
TD2-G646601	BRAKE ROD GROUP	219
TD2-G647501	HST PEDAL GROUP	222
TD2-G647603	HST CONTROL GROUP	223
TD2-G648001	ACCELERATOR GROUP	226
TC2-G648106	ACCELERATOR LEVER GROUP	227
TC2-G648201	ACCELERATOR PEDAL GROUP	228
TD2-G648501	EXTERNAL POSITION ADJUSTING LEVER GROUP	229
TD2-G652002	INSTRUMENT PANEL FRAME GROUP	230
TD2-G653004	STEERING COLUMN GROUP	231
TD2-G654001	STEERING COLUMN COVER GROUP	232
TD2-G655001	INSTRUMENT COVER GROUP	233
TD2-G662004	STEP MAT GROUP	234
TD2-G663003	AUXLIARY STEP GROUP	235
TD2-G671003	FUEL TANK GROUP	236
TD2-G682002	CHECK LINK GROUP	238
TD2-G684003	LIFT ROD GROUP	239
TD2-G685001	3 POINT LINKAGE GROUP	240
TD2-G631002	ROPS BAR GROUP	241
TD2-G651002	STEERING WHEEL GROUP	243
TD2-G681004	LOWER LINK GROUP	244
TD2-G683002	TOP LINK GROUP	245
TD2-G692001	DRAWBAR GROUP	246
TD2-G6D4002	LABEL(FRAME) GROUP	248

https://tractormanualz.com/

TD2-G6F0502 SMV BRACKET GROUP 249
TD2-G6F6001 7 PIN SOCKET GROUP 250

[OPTION]
TC2-G6G4101 ARM REST GROUP(OPTION) 251
TD2-G2M2001 MID PTO GROUP(OPTION) 252
TD2-G2M2002 MID PTO GROUP(OPTION) 254
TD2-G446003 HYDRAULIC BLOCK GROUP 257
TD2-G446004 HYDRAULIC BLOCK GROUP 259
TD2-G523002 REAR WORKING LAMP GROUP 261
TD2-G527002 POWER SOCKET GROUP 262
TD2-G593002 FRONT WORKING LAMP GROUP(OPTION) 263
TD2-G594001 3 PIN SOCKET GROUP(OPTION) 264
TD2-G595001 HST CRUISE GROUP 265
TD2-G6G2402 LOWER LINK GROUP(OPTION) 266
TD2-G6G2701 RPM LINKED GROUP 268
TD2-G6G4101 ARM REST GROUP 270
TD2-G6G0901 AIR CLEANER GROUP 271
TD2-G6G0701 SUNSHADE GROUP 272
TD2-G6A3001 REAR WEIGHT GROUP 273

INDEX1 274
INDEX2 285

https://tractormanualz.com/

EF2-G101001

CYLINDER BLOCK GROUP

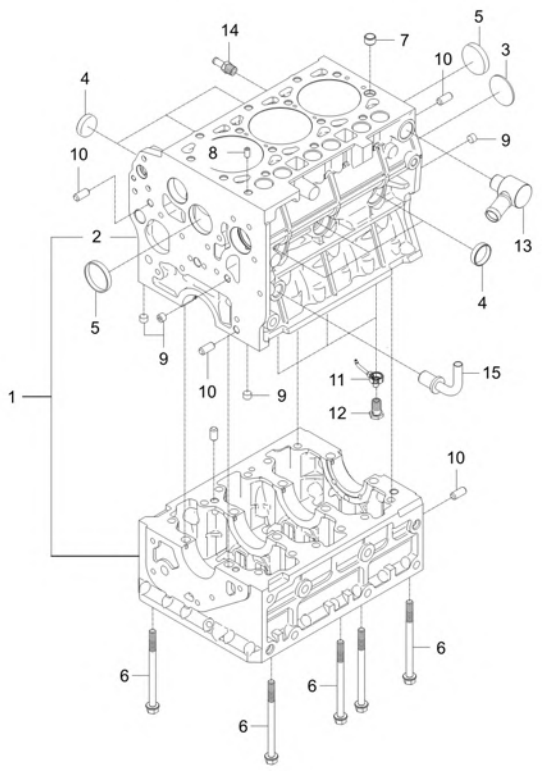

A : DK6010HSE

No.	Part Number	Description	Qty A	Qty B	Qty C	Qty D	Qty E	I.C	Remark
1	F5800-01108	CYLINDERBLOCKSUBASSY dnr v	1						-
2	F5800-01116	CYLINDER BLOCK	1						-
3	06311-75045	PLUG	1						T2*48*48
4	15221-0338-3	CAP, SEALING	6						-
5	15221-0339-2	CAP SEALING	2						-
6	F6800-90121	BOLT, LADDER FRAME	8						-
7	E6301-33812	PIN, PIPE	1						N
8	F6800-33651	PIN	1						-
9	E5900-96022	PLUG	4						-
10	05012-01018	PIN, STRAIGHT	4						
11	F6800-01311	BODY, PISTON COOLING JET	3						
12	F6800-01321	VALVE, PISTON COOLING JET	3						
13	F6800-20703	COOLANT CONNECTOR ASSY	1						-
14	F6800-73341	JOINT, HOSE	1						
15	E6500-33062	TUBE 3, OIL	1						-
15	E6500-33063	PIPE, OIL-3	1					<------	-

----> Old replace New
<---- New replace Old
<-X-> Not interchangeable
<---> Interchangeable
<-O-> Interchangeable with another part(s)
* Please place an order assy(*)

https://tractormanualz.com/

EF2-G102001

OIL PAN GROUP

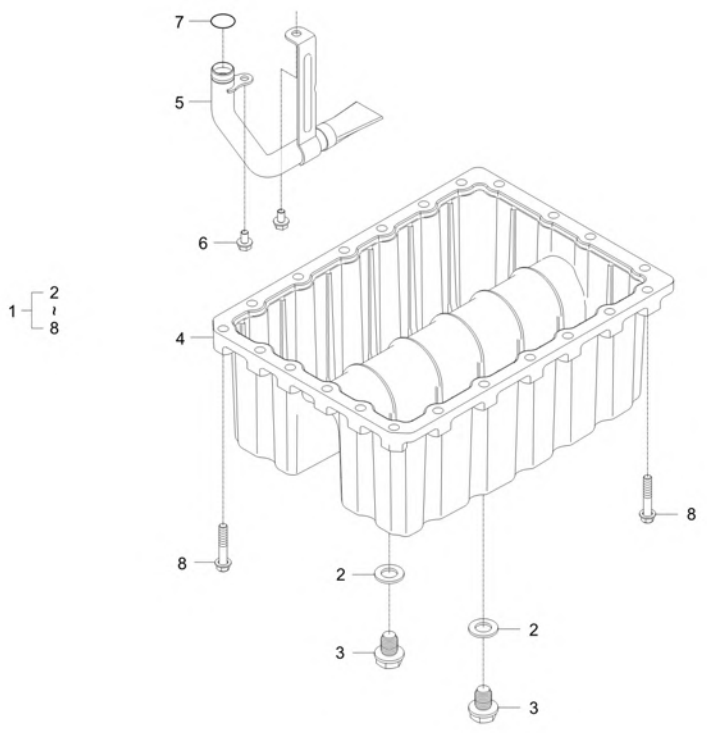

A : DK6010HSE

No.	Part Number	Description	Qty A	Qty B	Qty C	Qty D	Qty E	I.C	Remark
1	F5800-01601	ASSY FAN,OIL v	1						
1	F5800-01602	ASSY FAN,OIL v	1					<------	-
2	E6303-33661	GASKET	2						2.0t
3	E6303-33751	PLUG	2						-
3	E6303-33752	PLUG	2					<------	-
4	F5800-01611	FAN,OIL	1						
5	F5800-32111	OIL STRAINER ASSY	1						
6	01754-50610	BOLT, FLANGE	2						M6XP1.0
7	04811-00150	O RING v	1						
8	01654-50835	BOLT	22						M8x1.25

----> Old replace New
<---- New replace Old
<-X-> Not interchangeable
<---> Interchangeable
<-O-> Interchangeable with another part(s)
* Please place an order assy(*)

https://tractormanualz.com/

EF2-G103001

CYLINDER HEAD GROUP

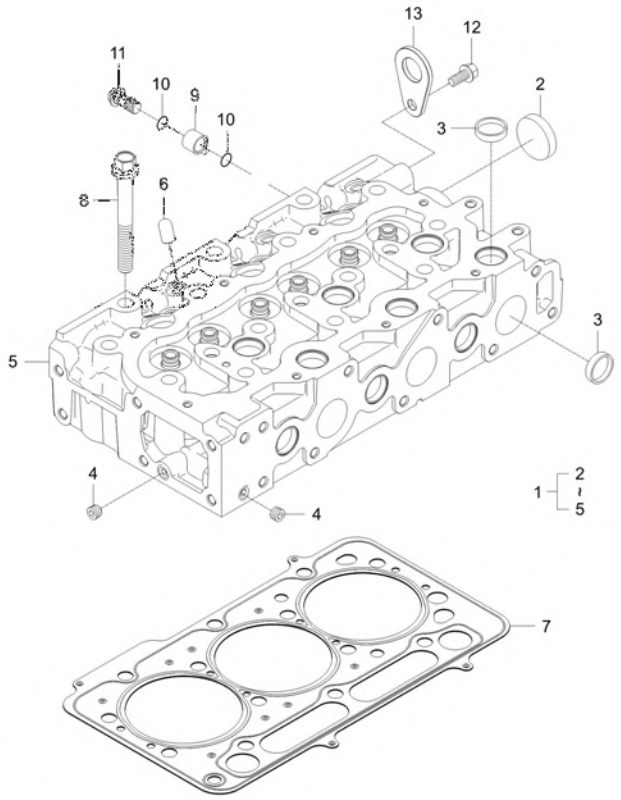

A : DK6010HSE

No.	Part Number	Description	Qty A	Qty B	Qty C	Qty D	Qty E	I.C	Remark
1	F5800-03044	ASSY HEAD,CYLINDER	1						
2	15221-0337-3	CAP SEALING	9						T1.6*40*40
3	15221-0349-3	CAP SEALING	1						T1.6*60*60
4	E5900-96022	PLUG	2						-
5	F5800-03054	CYLINDER HEAD SUB ASSY	1						-
6	F6800-03501	HINGE, INJECTOR CLAMP	3						
7	F5800-03311	GASKET,HEAD	1						
8	F6800-03451	BOLT,CYLINDER HEAD	14						
9	F5850-73341	CONNECTOR, COOLANT	1						
10	04814-00160	O RING	2						
11	T4260-62552	JOINT BOLT	1						
12	01754-50816	BOLT, FLANGE	1						M8XP1.25
13	15221-0175-1	ENGINE HOOK	1						T4*40*64

----> Old replace New
<---- New replace Old
<-X-> Not interchangeable
<---> Interchangeable
<-O-> Interchangeable with another part(s)
* Please place an order assy(*)

https://tractormanualz.com/

EF2-G104001

GEAR CASE GROUP

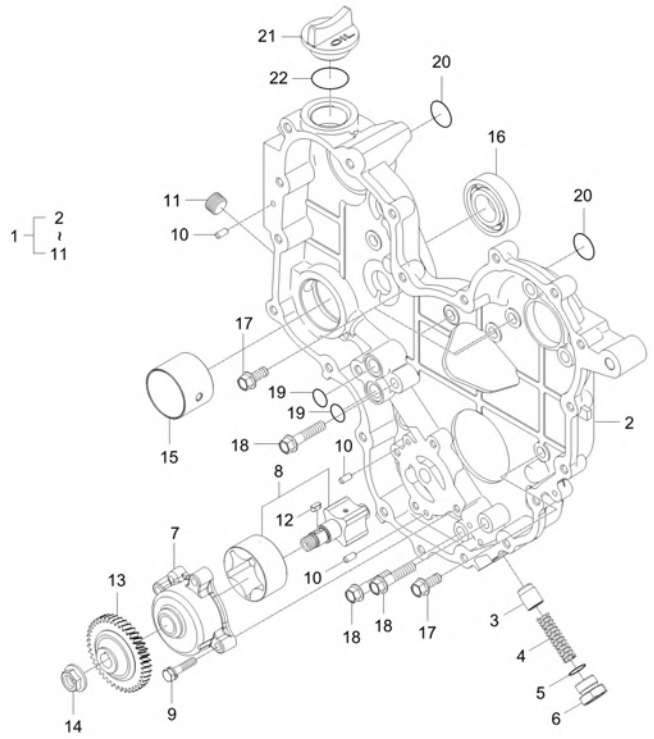

A : DK6010HSE

No.	Part Number	Description	Qty A	Qty B	Qty C	Qty D	Qty E	I.C	Remark
1	F6800-04107	ASSY CASE,GEAR	1						-
1	F6800-04108	ASSY CASE,GEAR	1					<----->	-
1	F6800-04109	ASSY CASE,GEAR	1					<----->	-
2	F5800-04114	GEAR CASE v	1						-
2	F5800-04115	GEAR CASE	1					<----->	-
2	F5800-04116	GEAR CASE	1					<----->	-
3	F6800-04711	PLUNGER, RELIEF VALVE dnr v	1						
3	F6800-04712	PLUNGER, RELIEF VALVE	1					<----->	-
4	F6800-04721	SPRING RELIEF VALVE	1						DIA1.8
5	04811-00160	O RING	1						DIA15.8
6	F6800-04731	PLUG, RELIEF VALVE	1						N
7	F6800-04302	COVER, OIL PUMP	1						-
8	F6800-04401	OIL PUMP ROTOR SHAFT ASSY	1						N
9	01754-50625	BOLT, FLANGE	4						7T
10	05012-00510	PIN,STRAIGHT	4						
11	E5800-96032	PLUG	1						PT3/8
12	05712-00410	KEY	1						5*5*14
13	F6800-35661	GEAR, OIL PUMP	1						-

----> Old replace New <---- New replace Old <-X-> Not interchangeable
<---> Interchangeable <-O-> Interchangeable with another part(s)
* Please place an order assy(*)

https://tractormanualz.com/

EF2-G104001

GEAR CASE GROUP

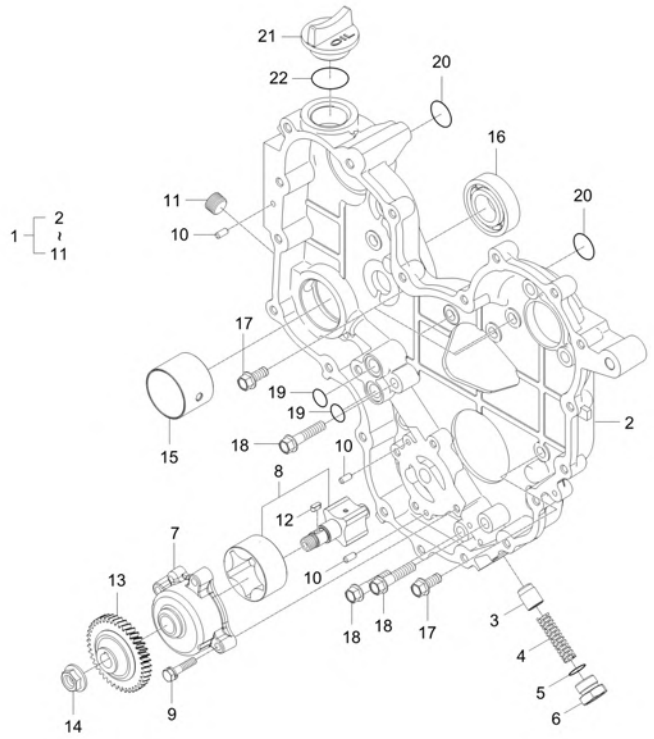

A : DK6010HSE

No.	Part Number	Description	Qty A	Qty B	Qty C	Qty D	Qty E	I.C	Remark
14	E6300-35681	FLANGE NUT	1						M12*P1.25
15	F6800-04501	BUSH, PTO SHAFT	1						
16	08101-06205	BEARING BALL dnr v	1						DIA25
17	01754-50816	BOLT, FLANGE	10						M8XP1.25
18	01754-50835	BOLT v	3						
19	04816-00150	O_RING	3						DIA14.8
20	04816-00220	O_RING dnr v	2						DIA21.8
21	E5500-33142	PLUG, OIL FILLER	1						
22	04811-50300	O RING v	1						G30

----> Old replace New <---- New replace Old <-X-> Not interchangeable
<---> Interchangeable <-O-> Interchangeable with another part(s)
* Please place an order assy(*)

https://tractormanualz.com/

EF2-G104501

GEAR CASE COVER GROUP

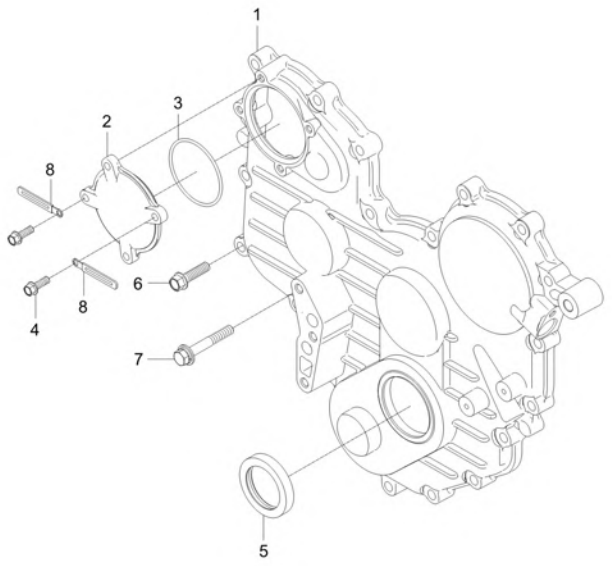

A : DK6010HSE

No.	Part Number	Description	Qty A	Qty B	Qty C	Qty D	Qty E	I.C	Remark
1	F6800-04215	COVER, GEAR CASE v	1						-
2	F6800-04251	COVER, HP PUMP GEAR	1						
3	04811-06630	O RING	1						Dia63
4	01754-50616	BOLT, FLANGE v	4						M6*P1.0
5	E5500-11302	OIL SEAL	1						
6	01754-50830	BOLT FLANGE	20						M8*P1.25
7	01125-50855	BOLT	1						
8	34150-2939-1	CLAMP, WIRE	2						-

----> Old replace New
<----> Interchangeable
* Please place an order assy(*)
<---- New replace Old
<-O-> Interchangeable with another part(s)
<-X-> Not interchangeable

https://tractormanualz.com/

EF2-G105001

OIL FILTER GROUP

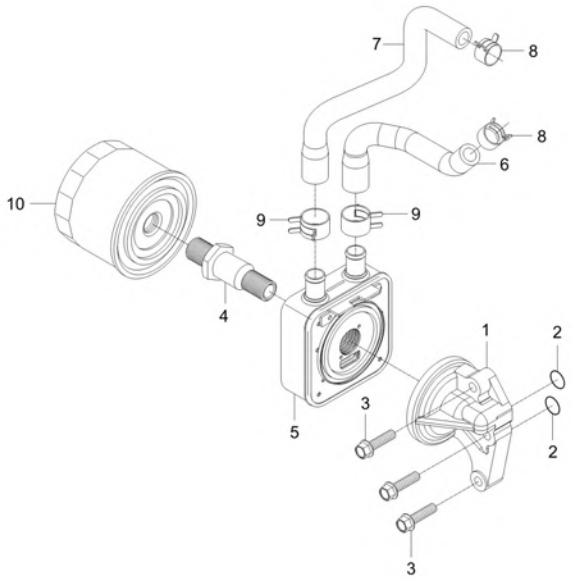

A : DK6010HSE

No.	Part Number	Description	Qty A	Qty B	Qty C	Qty D	Qty E	I.C	Remark
1	E5850-32617	SUPPORT,OIL FILTER	1						-
2	04816-00150	O_RING	2						DIA14.8
3	01754-50830	BOLT FLANGE	3						M8*P1.25
4	E6810-32292	TUBE, CONNECTING	1						N
5	E6820-32451	COOLER, OIL	1						-
6	F6800-16161	HOSE 1, OIL COOLER	1						
7	F6800-16172	HOSE 2, OIL COOLER	1						N
8	09318-88180	CLAMP, HOSE	2						
9	09318-88220	O-RING	2						
10	E6201-32443	OIL FILTER sp v	1						

----> Old replace New
<---- New replace Old
<-X-> Not interchangeable
<---> Interchangeable
<-O-> Interchangeable with another part(s)
* Please place an order assy(*)

https://tractormanualz.com/

EF2-G106001

CRANK SHAFT GROUP

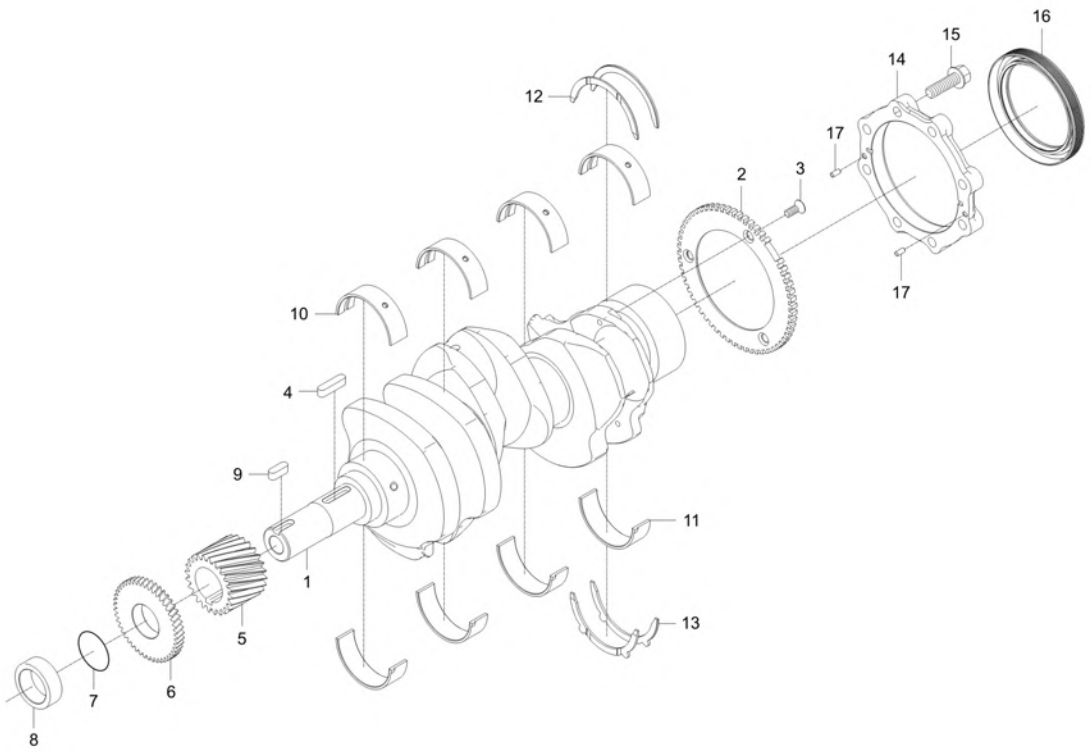

A : DK6010HSE

No.	Part Number	Description	Qty A	Qty B	Qty C	Qty D	Qty E	I.C	Remark
1	F5800-23111	SHAFT CRANK dnr v	1						
2	F5800-06201	WHEEL, CRANK POSITION SENSOR	1						
3	03016-50616	SCREW	3						M6XP1.0
4	05712-00730	KEY	1						W7XL30
5	F6800-24111	CRANKSHAFT GEAR	1						
6	F6800-35631	GEAR OIL PUMP DRIVE	1						
7	04811-10300	O RING	1						
8	19202-2325-1	CRANKSHAFT COLLAR	1						DIA44*20
8	19202-2325-2	SPACER	1					<----->	DIA44*20
9	05712-00720	KEY	1						8*8*24
10	F6800-23481	BEARING, CRANKSHAFT UPR	4						
11	F6800-23491	BEARING, CRANKSHAFT LWR	4						
12	F6800-23531	BEARING, CRANKSHAFT THRUST UPR	2						
13	F6800-23541	BEARING, CRANKSHAFT THRUST LWR	2						
14	F6800-04811	CASE,OIL SEAL	1						
15	01654-50830	FLANGE BOLT	8						7T
16	E5500-04464	OIL SEAL v	1						
17	05012-00408	STRAIGHT PIN	2						

----> Old replace New <---- New replace Old <-X-> Not interchangeable
<---> Interchangeable <-O-> Interchangeable with another part(s)
* Please place an order assy(*)

https://tractormanualz.com/

EF2-G107001

PISTON_CONNECTING ROD GROUP

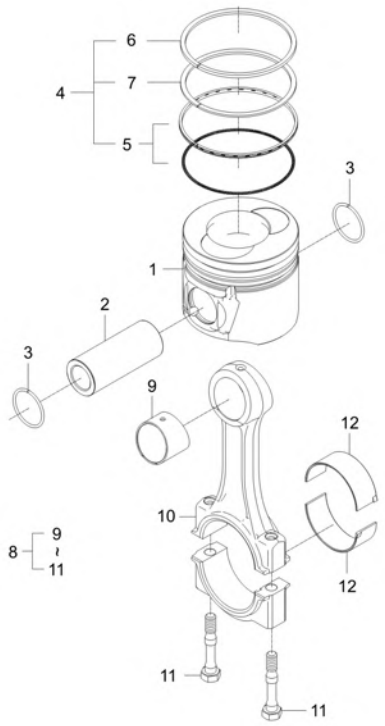

A : DK6010HSE

No.	Part Number	Description	Qty A	Qty B	Qty C	Qty D	Qty E	I.C	Remark
1	F6800-21111	PISTON	3						
2	F6800-21311	PIN, PISTON	3						
3	F6800-21331	RING, SNAP	6						
4	E6302-21051	PISTON RING Assy	3						
5	E6301-21202	ASSY,OIL RING	1						
6	E6302-21151	RING 1, PISTON v	1						
7	E6302-21161	RING 2, PISTON	1						
8	F6800-22011	CONNECTING ROD	3						
9	F6800-21351	BUSH,PISTON PIN	1						
10	F6800-22111	CONNECTINGROD	1						N
11	F6800-22141	BOLT	2						N
12	EF15-0004A	BEARING, CONNECTING ROD	6						

----> Old replace New
<---- New replace Old
<-X-> Not interchangeable
<---> Interchangeable
<-O-> Interchangeable with another part(s)
* Please place an order assy(*)

https://tractormanualz.com/

EF2-G109001

CAMSHAFT GROUP

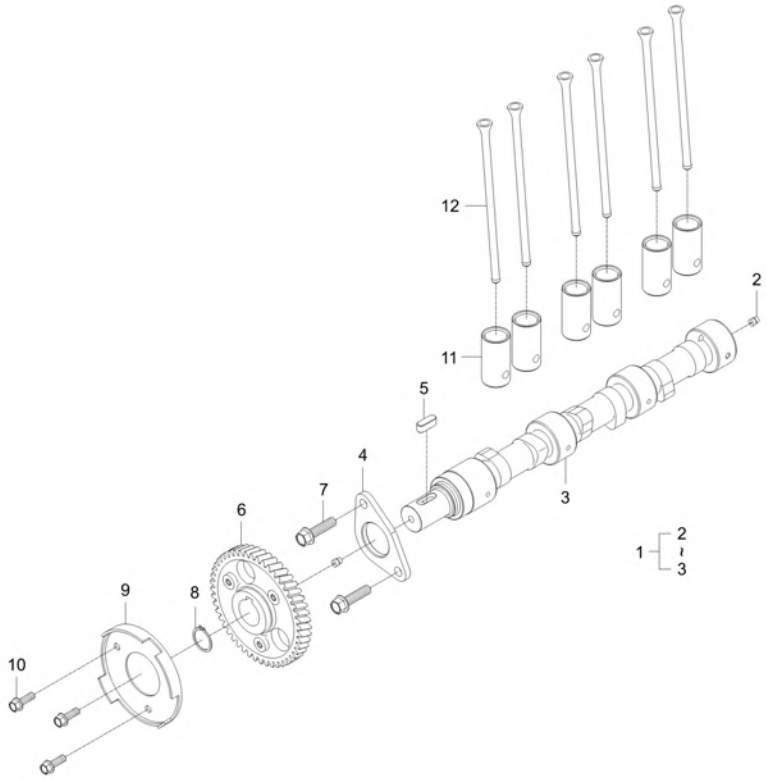

A : DK6010HSE

No.	Part Number	Description	Qty A	Qty B	Qty C	Qty D	Qty E	I.C	Remark
1	F5800-16012	ASSY CAMSHAFT v	1						N
2	06350-00607	PLUG v	2						
3	F5800-16152	CAMSHAFT	1						N
4	F6800-16271	STOP, CAM SHAFT	1						
5	05712-00720	KEY	1						8*8*24
6	F6800-16511	CAMSHAFT GEAR	1						
7	01754-50830	BOLT FLANGE	2						M8*P1.25
8	E5205-24321	SNAP RING	1						T2
9	F6800-09051	WHEEL, CAMSHAFT SENSOR	1						2T
10	01754-50612	BOLT, FLANGE	3						M6*1.0
11	E5500-15553	TAPPET	6						DIA26*51
12	F6800-15111	ROD PUSH v	6						

----> Old replace New
<---- New replace Old
<-X-> Not interchangeable
<---> Interchangeable
<-O-> Interchangeable with another part(s)
* Please place an order assy(*)

https://tractormanualz.com/

EF2-G110001

IDLE GEAR GROUP

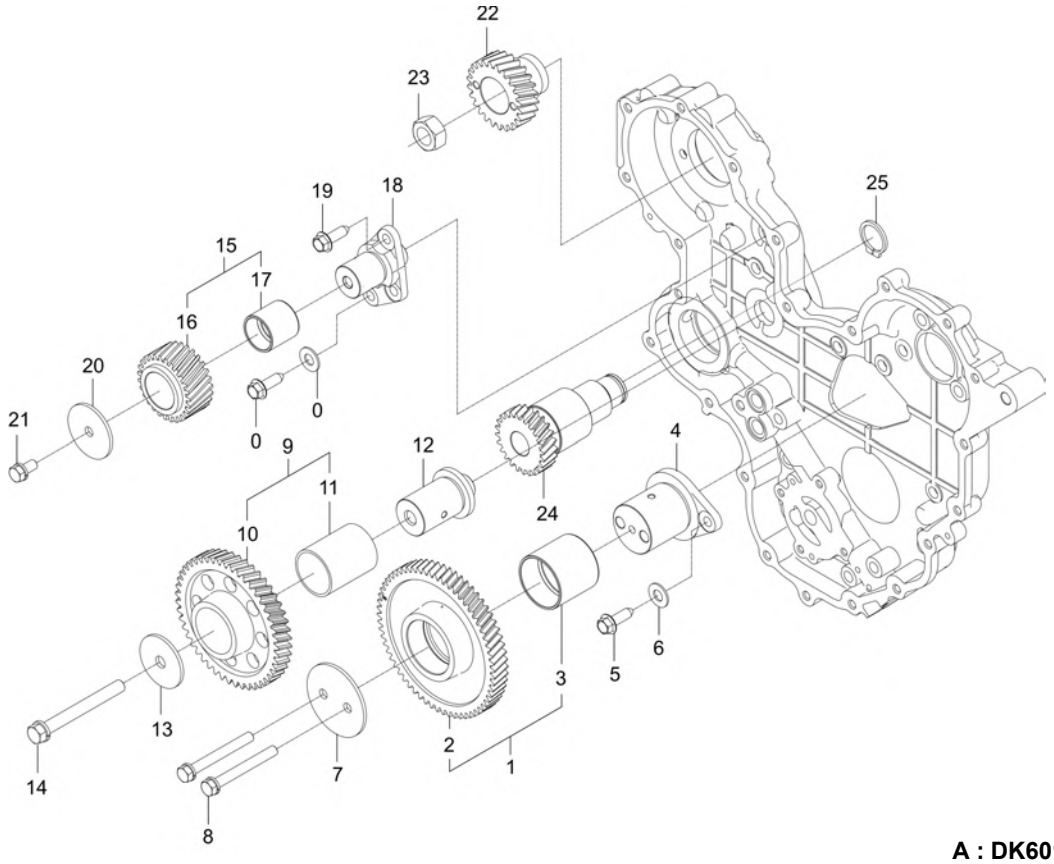

A : DK6010HSE

No.	Part Number	Description	Qty A	Qty B	Qty C	Qty D	Qty E	I.C	Remark
1	F5850-10102	Assy IDLE GEAR1	1						-
2	F5850-10112	IDLE GEAR, 1	1						-
3	F6800-10121	Bush, Idle Gear1	1						
4	F6800-10155	SHAFT,IDLEGEAR1 v	1						-
5	EF15-0030A	FLANGE BOLT v	2						
6	EF15-0029A	NORD-LOCK WASHER v	3						
7	F6800-10163	STOPPER 1, IDLE GEAR	1						-
8	01123-50870	WASHER BOLT	2						
9	F6800-10301	IDLE GEAR ASSY, 3	1						
10	F6800-10311	IDLE GEAR, 3	1						
11	F6800-10321	Bush, Idle Gear3	1						
12	F6800-10353	SHAFT 3, IDLE GEAR v	1						-
13	F6800-10261	STOPPER, IDLE GEAR 2	1						
14	01133-51090	BOLT	1						P1.25
15	F6800-10401	IDLE GEAR ASSY, 4	1						
16	F6800-10411	IDLE GEAR, 4	1						
17	F6800-10421	Bush, Idle Gear4	1						
18	F6800-10455	SHAFT,IDLEGEAR4 v	1						-

----> Old replace New
<----> Interchangeable
* Please place an order assy(*)
<---- New replace Old
<-O-> Interchangeable with another part(s)
<-X-> Not interchangeable

https://tractormanualz.com/

EF2-G110001

IDLE GEAR GROUP

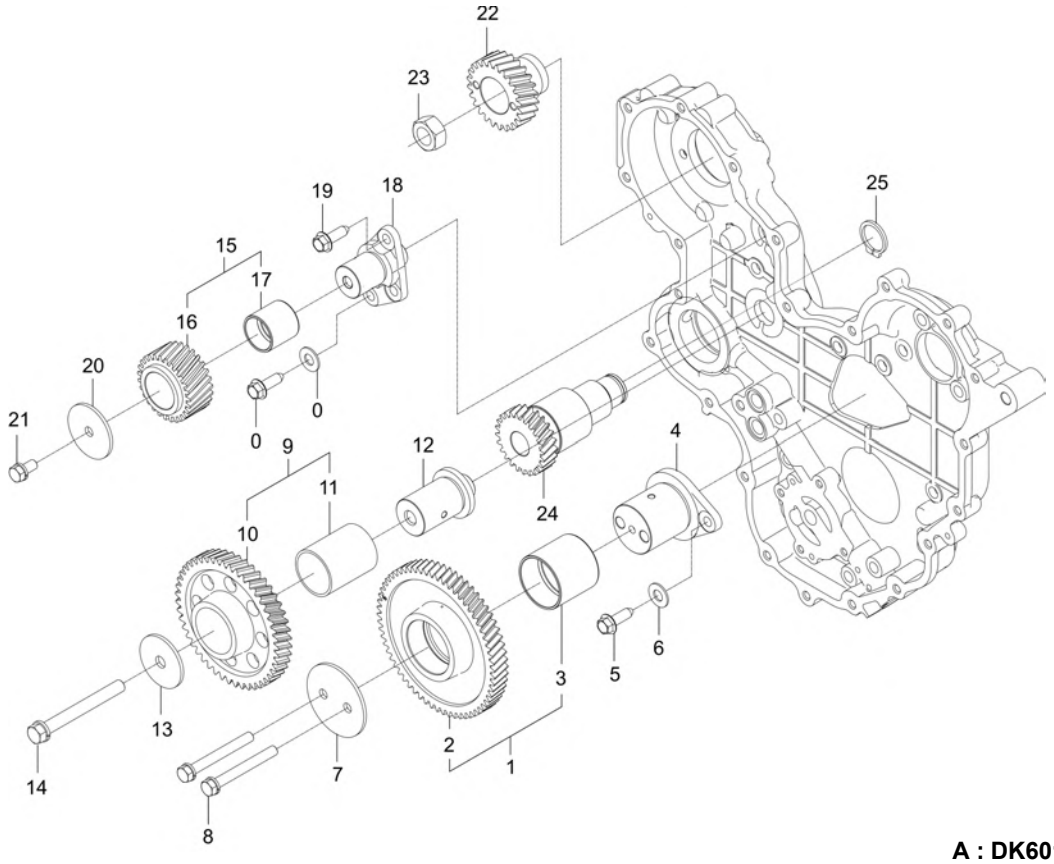

A : DK6010HSE

No.	Part Number	Description	Qty A	Qty B	Qty C	Qty D	Qty E	I.C	Remark
19	EF15-0038A	BOLT, FLANGE	3						-
20	F6800-10261	STOPPER, IDLE GEAR 2	1						
21	EF15-0039A	BOLT, WITH WASHER	1						-
22	F6800-10502	GEAR, HP FUEL PUMP	1						N
23	F6800-92771	FLANGE NUT	1						M14x1.5
24	F6800-10612	GEAR, HYDRAULIC PUMP DRIVE	1						-
25	15471-9536-1	SNAP_RING	1						

----> Old replace New
<---- New replace Old
<-X-> Not interchangeable
<---> Interchangeable
<-O-> Interchangeable with another part(s)
* Please place an order assy(*)

https://tractormanualz.com/

EF2-G111001

ROCKER ARM_VALVE GROUP

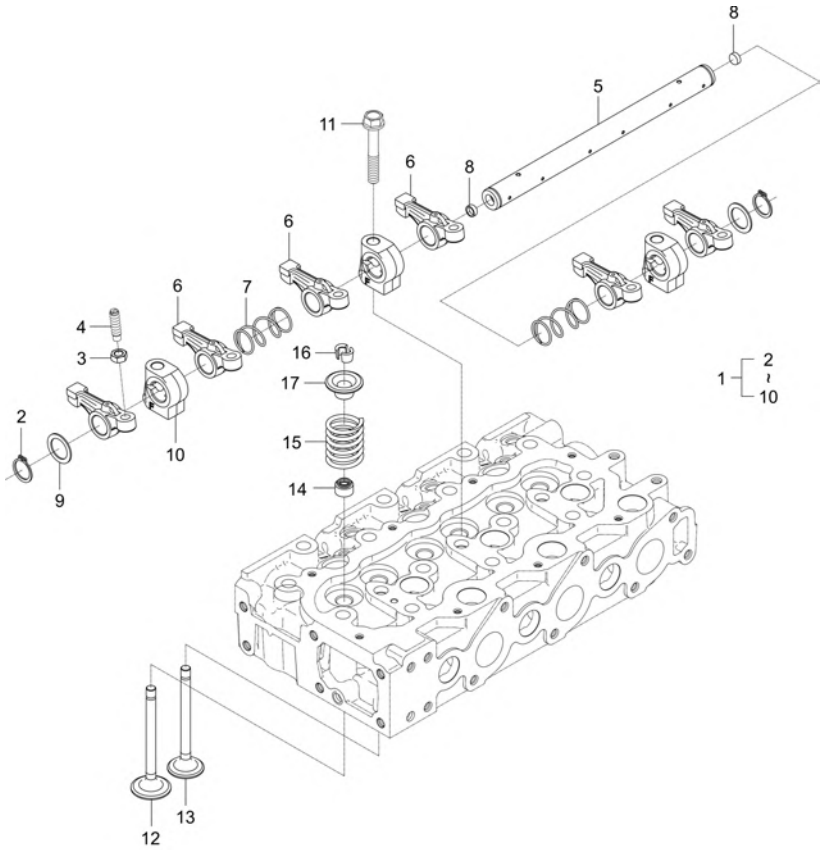

A : DK6010HSE

No.	Part Number	Description	Qty A	Qty B	Qty C	Qty D	Qty E	I.C	Remark
1	F5800-14001	ASSY ARM,ROCKER	1						
2	04612-00190	SNAP RING	2						
3	15021-1424-1	NUT	6						HEX12,M8*1.0*11
4	E5500-14232	SCREW,ADJUSTING	6						DIA10,M8*1.0*34
5	E5800-14261	SHAFT,ROCKER ARM	1						
6	E6301-14111	ROCKERARM	6						
7	E6301-14311	ROCKERARM SPRING	2						
8	E6301-14331	CAP, SEALING obs v	2						
9	E6301-14431	PLAIN WASHER	2						T1.2*30*30
10	F6800-14351	BRACKET, ROCKER ARM	3						
11	E6510-91502	BOLT,(R/A SUPPORT) v	3						
12	E6700-13111	VALVE, INTAKE	3						
13	E6700-13121	EXHAUST VALVE v	3						
14	E6301-13151	SEAL, VALVE STEM	6						
15	E6400-13241	SPRING, VALVE	6						
16	E6403-13361	COLLET,VALVE SPRING v	12						KK8(독일 TRW)
17	E5500-13333	RETAINER VALVE SPRING v	6						

----> Old replace New <---- New replace Old <-X-> Not interchangeable
<---> Interchangeable <-O-> Interchangeable with another part(s)
* Please place an order assy(*)

https://tractormanualz.com/

EF2-G111501

FUEL EQUIPMENT GROUP

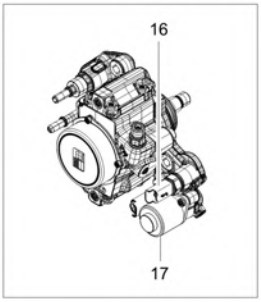

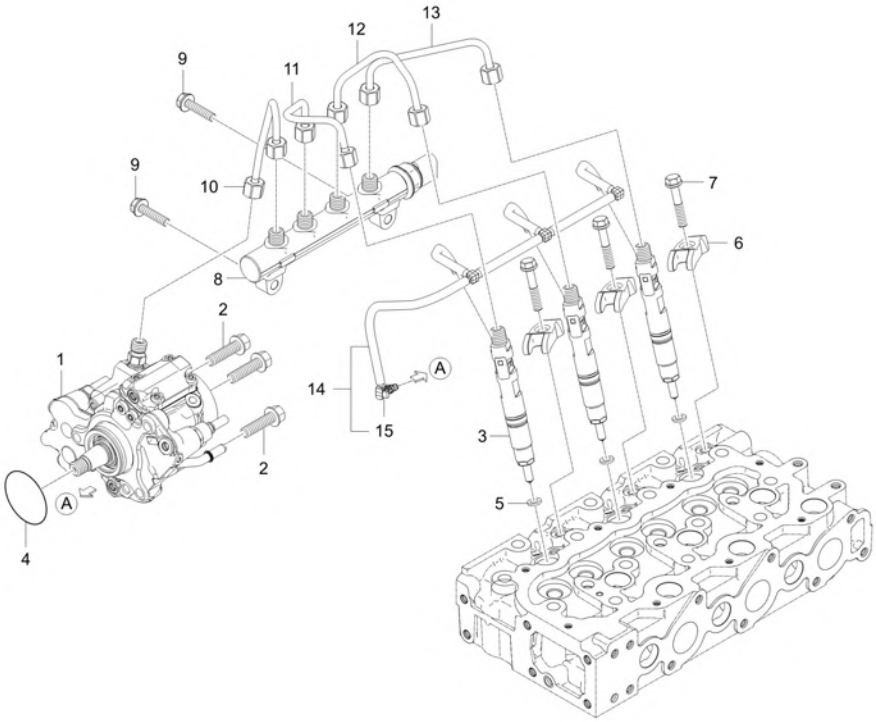

A : DK6010HSE

No.	Part Number	Description	Qty A	Qty B	Qty C	Qty D	Qty E	I.C	Remark
1	F6800-12104	HP FUEL PUMP ASSY v	1						
2	01754-50835	BOLT v	3						M8XP1.25
3	F6805-53001	INJECTOR ASS'Y v	3						N
4	04811-50500	O RING	1						
5	F6800-53181	SEAT, INJECTOR	3						t2.0
6	F6805-53452	CLMAP, INJECTOR v	3						
6	F6805-53453	CLAMP, INJECTOR	3					<----->	
7	F6800-53471	BOLT, INJECTOR CLMAP	3						
8	F5800-12203	FUEL RAIL ASSY	1						
9	01754-50830	BOLT FLANGE	2						M8XP1.25
10	F5800-12252	PIPE, RAIL	1						
11	F6800-53722	PIPE 2, INJECTION	1						
12	F6800-53732	PIPE 3, INJECTION	1						
13	F6800-53742	PIPE 4, INJECTION	1						
14	F5800-42501	INJECTOR RETURN TUBE ASSY	1						
15	F6800-42511	CONNECTOR	1						
16	F6800-12103002	FUEL TEMPERATURE SENSOR	1						-
17	F6800-12103001	INLET METERING VALVE	1						N

----> Old replace New
<---- New replace Old
<-X-> Not interchangeable
<---> Interchangeable
<-O-> Interchangeable with another part(s)
* Please place an order assy(*)

https://tractormanualz.com/

EF2-G114003

WATER FLANGE GROUP

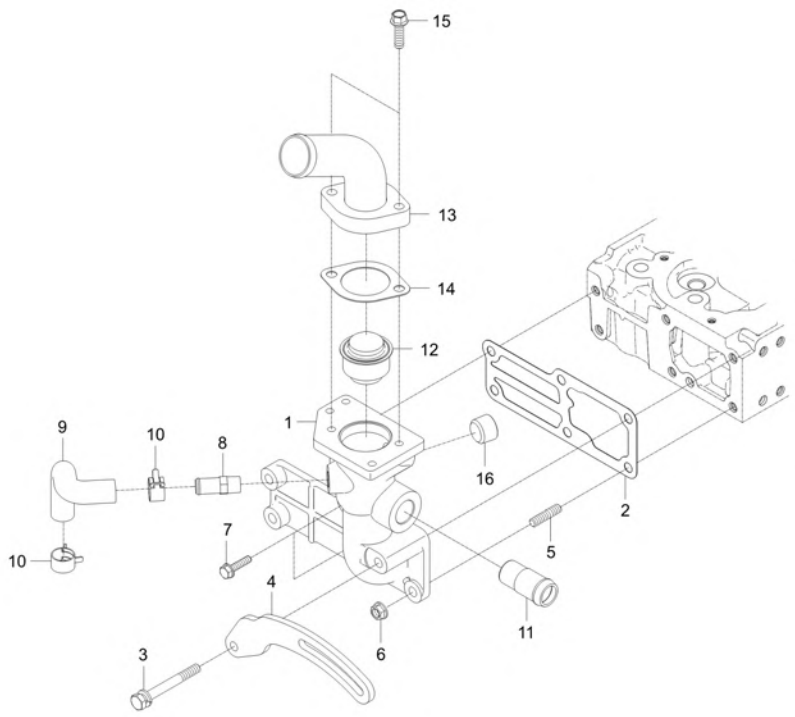

A : DK6010HSE

No.	Part Number	Description	Qty A	Qty B	Qty C	Qty D	Qty E	I.C	Remark
1	F5830-72914	PLANGE, WATER dnr v	1						N
2	F6800-72921	GASKET COOLING WATER FLANGE	1						
3	01123-50870	WASHER BOLT	1						
4	F6800-64421	SUPPORT, ALTERNATOR dnr v	1						
5	01513-50822	STUD	1						M8*1.25
6	02763-50080	FLANGE NUT	1						M8XP1.25
7	01754-50820	BOLT, FLANGE	2						M8XP1.25
8	E5500-73342	HOSE, WATER RETURN v	1						
8	E5500-73343	PIPE, WATER RETURN	1					<------	
9	E6850-73342	HOSE, WATER PUMP v	1						
10	09318-88180	CLAMP, HOSE	2						
11	F6800-13311	CONNECTOR, COOLANT	1						DIA22.3
12	E5500-73013	THERMOSTAT ASSEMBLY	1						
13	EF26-0001A	COVER,THERMOSTAT	1						
14	E5500-73272	GASKET v	1						t1.0
15	01754-50825	BOLT, FLANGE	2						M8XP1.25
16	F6860-96042	PLUG	1						PT1/2

----> Old replace New <---- New replace Old <-X-> Not interchangeable
<---> Interchangeable <-O-> Interchangeable with another part(s)
* Please place an order assy(*)

https://tractormanualz.com/

EF2-G115001

WATER PUMP GROUP

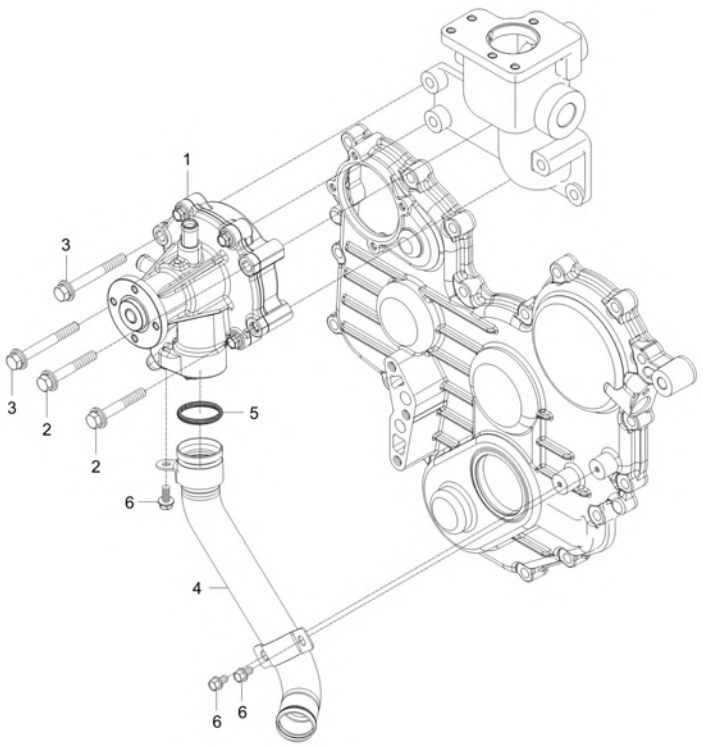

A : DK6010HSE

No.	Part Number	Description	Qty A	Qty B	Qty C	Qty D	Qty E	I.C	Remark
1	F6800-73031	ASSY PUMP,WATER sp v	1						
2	01125-50850	BOLT, WASHER	2						M8*P1.25
3	01125-50870	BOLT, WASHER	2						
4	F6800-73051	WATER PUMP PIPE ASSY	1						
5	04811-00320	O RING v	1						(P32)
6	01754-50610	BOLT, FLANGE	3						M6XP1.0

----> Old replace New
<---- New replace Old
<-X-> Not interchangeable
<---> Interchangeable
<-O-> Interchangeable with another part(s)
* Please place an order assy(*)

https://tractormanualz.com/

EF2-G116001

CYLINDER HEAD COVER GROUP

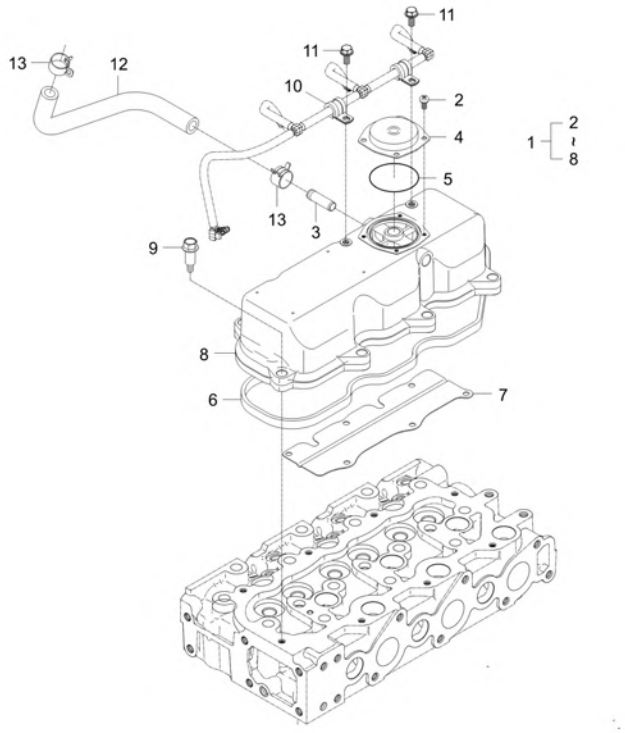

A : DK6010HSE

No.	Part Number	Description	Qty A	Qty B	Qty C	Qty D	Qty E	I.C	Remark
1	F5850-14501	CYLINDER HEAD COVER ASSEMBLY v	1						
2	03024-50510	SCREW, WASHER	4						M5*P0.8
3	E6510-05552	CONNECTOR, AIR BREATHER HOSE	1						N
4	E6510-14532	COVER, VALVE	1						N
5	E6510-14671	O RING	1						N
6	F5800-14521	GASKET, CYLINDER HEAD COVER	1						
7	F5800-14561	PROTECT PLATE OF OIL	1						
8	F5850-14511	COVER,CYLINDER HEAD v	1						
9	E6510-33661	BOLT, CYLINDER HEAD COVER v	8						
10	F6800-15122	CLAMP, HOSE	2						
11	01754-50610	BOLT, FLANGE	2						M6XP1.0
12	F5830-05511	HOSE, BLOW BY	1						N
13	09318-88180	CLAMP, HOSE	2						

----> Old replace New
<---- New replace Old
<-X-> Not interchangeable
<---> Interchangeable
<-O-> Interchangeable with another part(s)
* Please place an order assy(*)

https://tractormanualz.com/

EF2-G117003

FUEL FILTER GROUP

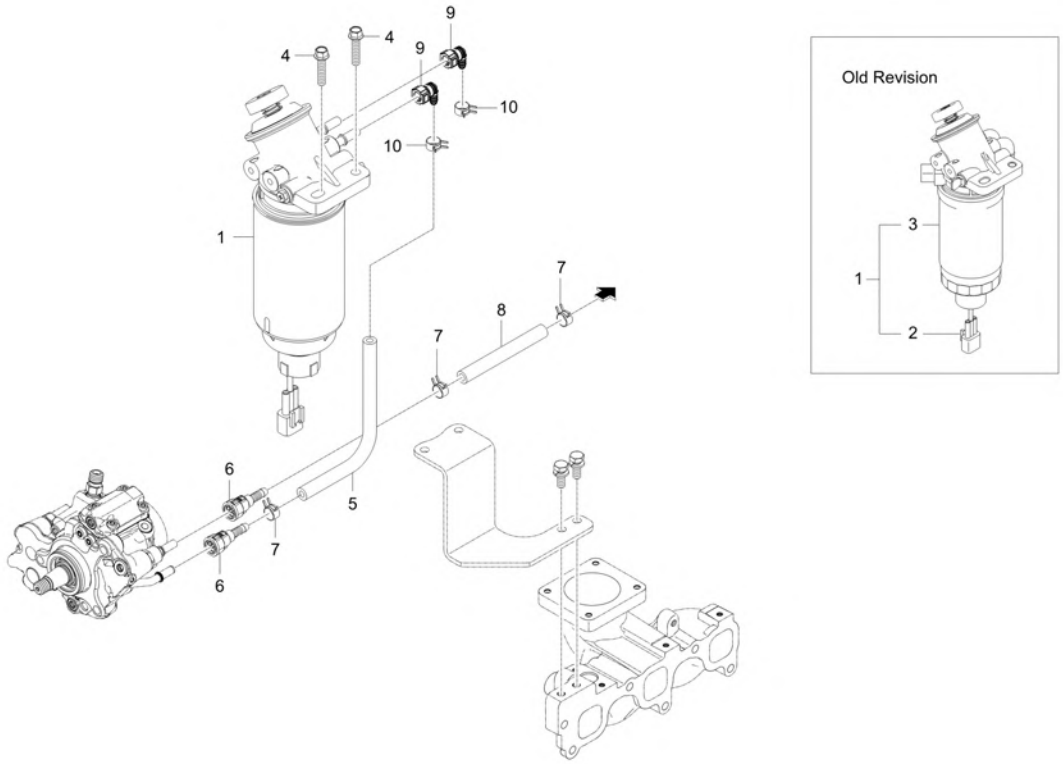

A : DK6010HSE

No.	Part Number	Description	Qty A	Qty B	Qty C	Qty D	Qty E	I.C	Remark
1	F5805-16402	FILTER, FUEL ASSY v	1 ~ VGG700016						
1	EH35-0006A	ASSY, MAIN FUEL FILTER	1 VGG700017 ~ WGG700024					<--O-->	
2	F6800-16121	SENSOR, FUEL WATER	1						
3	F6800-16411	FILTER, FUEL v	1						
4	01125-50830	BOLT, WASHER	2 ~ VGG700016						M8*P1.25
4	01754-50835	BOLT v	2					<--O-->	
5	09661-80450	HOSE	1						
6	F6800-16131	QUICK CONNECTOR	3						-
7	14911-4275-1	CLIP, TUBE	3						T0.8*#12
8	09661-80300	HOSE	1						-
9	F6800-91851	BAND, HOSE	1 TGG700001 ~ VGG700016						12-22mm
9	T5980-81291	QUICK CONNECTOR	2					<--O-->	
10	09318-88140	CLMAP, HOSE	2						

---> Old replace New
<---> Interchangeable
<---- New replace Old
<-O-> Interchangeable with another part(s)
<-X-> Not interchangeable
* Please place an order assy(*)

https://tractormanualz.com/

EF2-G118001

INTAKE MANIFOLD GROUP

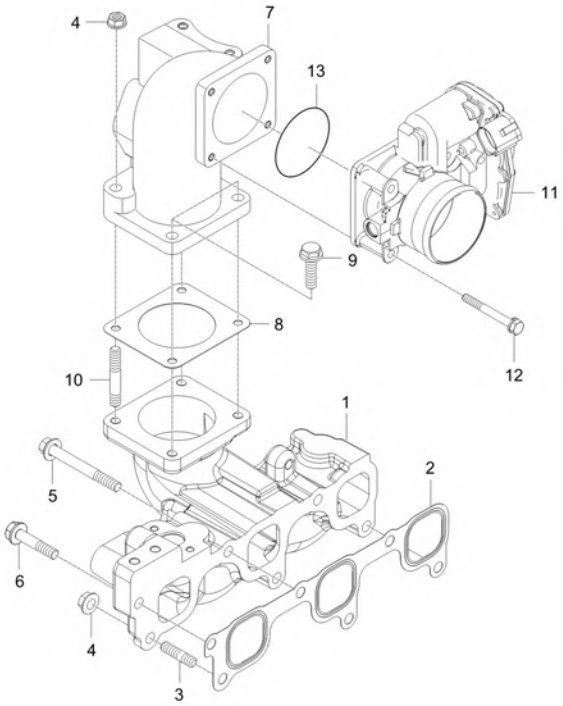

A : DK6010HSE

No.	Part Number	Description	Qty A	Qty B	Qty C	Qty D	Qty E	I.C	Remark
1	F5800-11762	MANIFOLD, INTAKE	1						N
1	F5800-11763	MANIFOLD, INTAKE	1					<----->	-
2	F5800-11821	GASKET, INTAKE MANIFOLD	1						
3	01513-50822	STUD	1						M8*1.25
4	02763-50080	FLANGE NUT	3						M8XP1.25
5	01125-50870	BOLT, WASHER	2						
6	01754-50830	BOLT FLANGE	3						M8*P1.25
7	F5830-17202	FLANGE,INTAKEMANIFOLD	1						N
8	F6800-17211	GASKET, INTAKE MANIFOLD FLANGE	1						
9	01754-50822	BOLT, FLANGE	2						
10	01513-50835	STUD	2						
11	F6800-17701	AIR CONTROL VALVE ASSY	1						
12	01023-50645	BOLT, WASHER v	4						
13	EH13-0002A	O RING-ACV v	1						

----> Old replace New
<---- New replace Old
<-X-> Not interchangeable
<---> Interchangeable
<-O-> Interchangeable with another part(s)
* Please place an order assy(*)

https://tractormanualz.com/

EF2-G119001

EGR GROUP

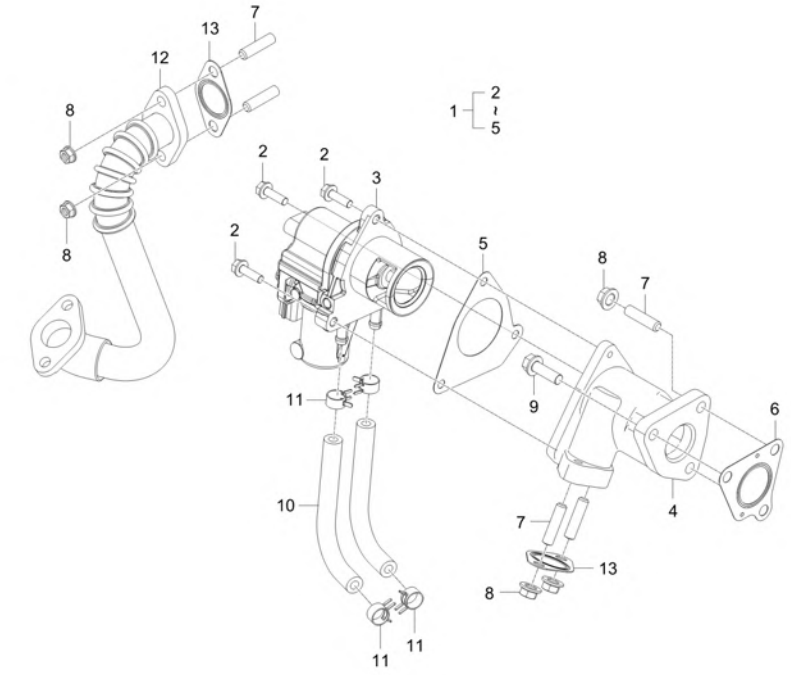

A : DK6010HSE

No.	Part Number	Description	Qty A	Qty B	Qty C	Qty D	Qty E	I.C	Remark
1	F5800-17502	EGR VALVE AND HOUSING ASSY	1						
1	F5800-17503	EGR VALVE AND HOUSING ASSY	1					<----->	
2	01754-50620	BOLT, FLANGE	3						
3	F5800-17512	EGR VALVE ASSY	1						
4	F5800-17521	EGR HOUSING HOUSING	1						N
4	F5800-17522	EGR HOUSING HOUSING	1					<----->	-
5	F5800-17531	GASKET	1						
6	F6800-17551	GASKET, EGR HOUSING	1						
7	01513-50822	STUD	5						M8*1.25
8	02763-50080	FLANGE NUT	5						M8XP1.25
9	01754-50825	BOLT, FLANGE	2						M8XP1.25
10	F5830-17562	COOLING HOSE	2						
11	09318-88130	CLAMP, HOSE	4						
12	F5830-17801	EGR PIPE ASSY	1						N
13	F6800-20301	GASKET, EGR	2						

----> Old replace New
<---- New replace Old
<-X-> Not interchangeable
<---> Interchangeable
<-O-> Interchangeable with another part(s)
* Please place an order assy(*)

https://tractormanualz.com/

EF2-G120003

INTAKE HOSE GROUP

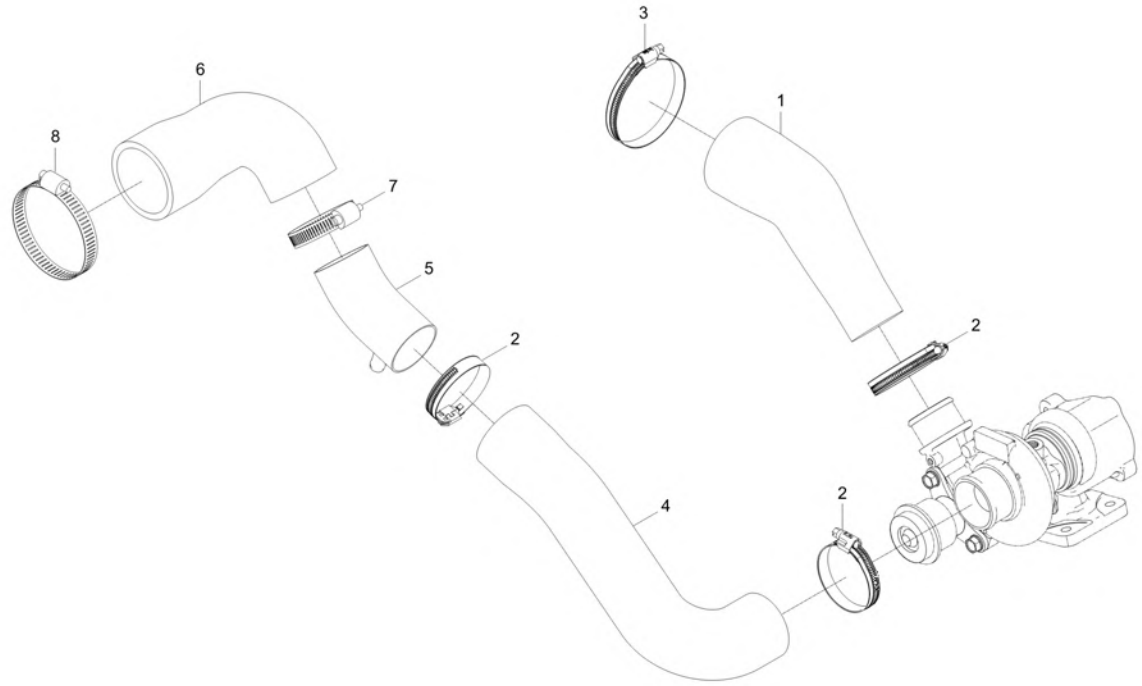

A : DK6010HSE

No.	Part Number	Description	Qty A	Qty B	Qty C	Qty D	Qty E	I.C	Remark
1	F6800-11651	HOSE, INLET	1						
2	F6800-91812	HOSE CLAMP	3						
3	F6800-91822	HOSE CLAMP	1						
4	F5810-18943	INLET HOSE, 1	1						N
5	EF23-0003A	BLOWBYCONNECTOR	1						OD5 X T1.5
6	EF23-0002A	HOSE2, INLET	1						
7	E7300-72891	CLAMP, HOSE	1						DIA60스탠 60#
8	E7300-11791	CLAMP, HOSE	1						DIA85스탠 85#

----> Old replace New
<---- New replace Old
<-X-> Not interchangeable
<---> Interchangeable
<-O-> Interchangeable with another part(s)
* Please place an order assy(*)

https://tractormanualz.com/

EF2-G121003

EXHAUST MANIFOLD GROUP

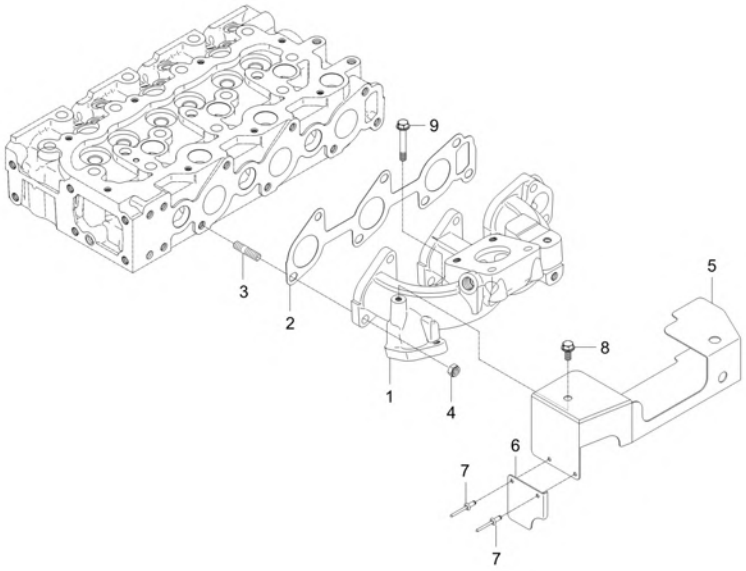

A : DK6010HSE

No.	Part Number	Description	Qty A	Qty B	Qty C	Qty D	Qty E	I.C	Remark
1	F5800-12313	MANIFOLD,EXHAUST	1						
2	F5800-12351	GASKET, EXHAUST MANIFOLD	1						
3	F6800-92451	BOLT, STUD	5						M8*P1.25
3	F6800-92452	BOLT, STUD	5					<------	M8*P1.25
4	F6800-91911	U-NUT	5						-
5	F5800-13764	PLATE,HEAT	1						t1.2
6	F5800-13773	PLATE	1						t1.2
7	F6800-94111	RIVET	2						
8	01754-50610	BOLT, FLANGE	1						M6XP1.0
9	01754-50640	FLANGE BOLT	1						

----> Old replace New <---- New replace Old <-X-> Not interchangeable
<---> Interchangeable <-O-> Interchangeable with another part(s)
* Please place an order assy(*)

https://tractormanualz.com/

EF2-G122003

EGR COOLER GROUP

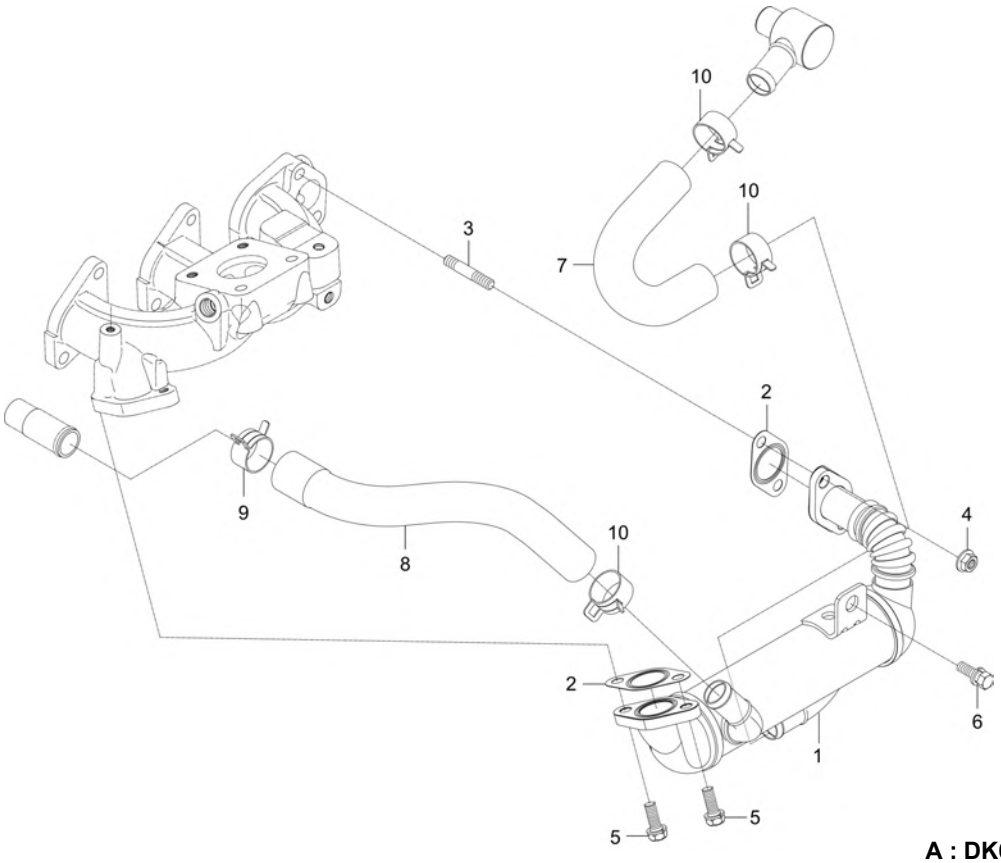

A : DK6010HSE

No.	Part Number	Description	Qty A	Qty B	Qty C	Qty D	Qty E	I.C	Remark
1	F5800-20101	EGR COOLER ASSY	1						
2	F6800-20301	GASKET, EGR	2						
3	01513-50835	STUD	2						
4	F6800-91911	U-NUT	2						-
5	01123-50822	WASHER BOLT	2						M8XP1.25
6	01123-50816	Hex Head Cap Screw	1						M8XP1.25
7	F6800-20401	HOSE 1, EGR COOLER	1						
8	F6800-20501	HOSE 2, EGR COOLER	1						
9	09318-88260	HOSE CLAMP	1						
10	09318-88250	CLAMP	3						

----> Old replace New
<---- New replace Old
<-X-> Not interchangeable
<---> Interchangeable
<-O-> Interchangeable with another part(s)
* Please place an order assy(*)

https://tractormanualz.com/

EF2-G123001

FLYWHEEL HOUSING GROUP

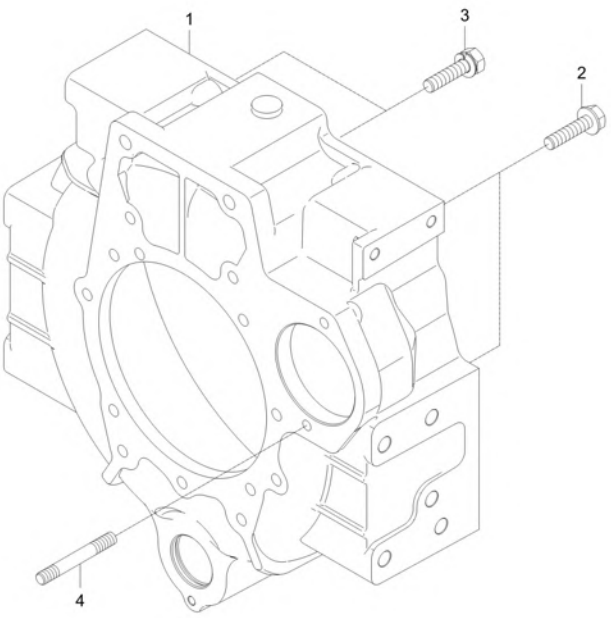

A : DK6010HSE

No.	Part Number	Description	Qty A	Qty B	Qty C	Qty D	Qty E	I.C	Remark
1	F5831-04612	HOUSING, FLYWHEEL	1						
2	EF11-0001A	BOLT,FLANGEWITHPIN	11						HRC20-28
3	01133-51240	BOLT, WASHER	2						M12XP1.25
4	01517-51028	STUD	1						M10XP1.25

----> Old replace New
<---- New replace Old
<-X-> Not interchangeable
<---> Interchangeable
<-O-> Interchangeable with another part(s)
* Please place an order assy(*)

https://tractormanualz.com/

EF2-G124003

FLYWHEEL GROUP

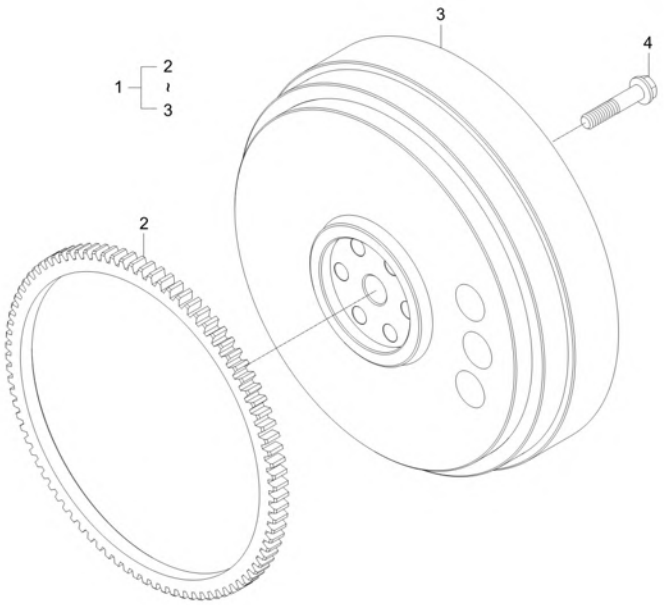

A : DK6010HSE

No.	Part Number	Description	Qty A	Qty B	Qty C	Qty D	Qty E	I.C	Remark
1	F5800-25012	ASSY FLYWHEEL	1						
1	F5800-25013	ASSY FLYWHEEL	1					<----->	
2	E7103-63821	GEAR RING (use 15221-63824) dnr v	1						
3	F5800-25112	FLYWHEEL	1						N
3	F5800-25113	FLYWHEEL	1					<----->	-
4	E5620-25161	BOLT,FLYWHEEL	6						

----> Old replace New
<----> Interchangeable
* Please place an order assy(*)
<---- New replace Old
<-O-> Interchangeable with another part(s)
<-X-> Not interchangeable

https://tractormanualz.com/

EF2-G127003

TURBO CHARGER GROUP

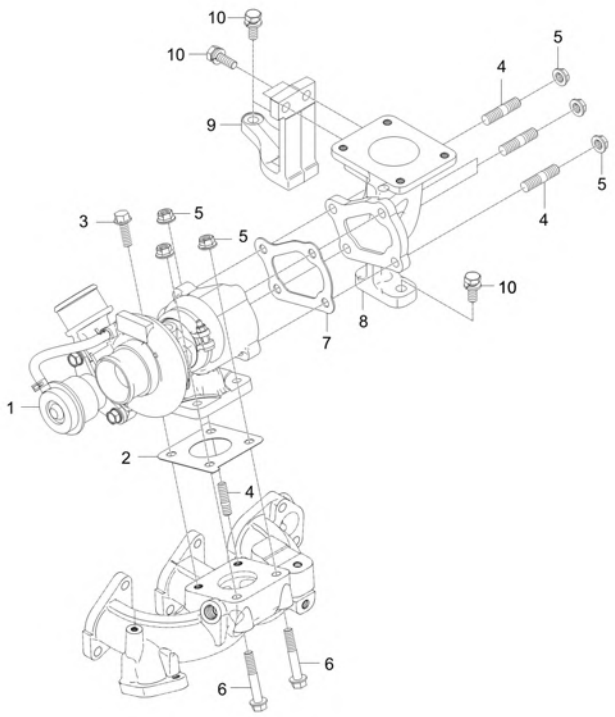

A : DK6010HSE

No.	Part Number	Description	Qty A	Qty B	Qty C	Qty D	Qty E	I.C	Remark
1	F5800-17011	TURBOCHARGER ASSY dnr v	1						
1	F5800-17012	TURBOCHARGER ASSY v	1					<----->	-
2	F6800-17101	GASKET 1, TURBOCHARGER	1						
3	F6800-92411	FLANGEBOLT	3						M8x1.25 25mm
3	F6800-92411	FLANGEBOLT	1					<----->	M8x1.25 25mm
4	F6800-92441	BOLT, STUD	3						
4	F6800-92441	BOLT, STUD	5					<----->	
5	F6800-91911	U-NUT	5						-
5	F6800-91911	U-NUT	7					<----->	-
6	F6800-92421	FLANGEBOLT	2						M8x1.25 65mm
7	F6800-17111	GASKET 2, TURBOCHARGER	1						t1.5
8	F6800-11951	FLANGE, TURBOCHARGER	1						
9	F6800-25501	SUPPORT, TURBOCHARGER FLANGE	1						
10	01123-50822	WASHER BOLT	5						M8XP1.25

----> Old replace New
<---- New replace Old
<-X-> Not interchangeable
<---> Interchangeable
<-O-> Interchangeable with another part(s)
* Please place an order assy(*)

https://tractormanualz.com/

EF2-G127004

CRANK SHAFT FULLEY GROUP

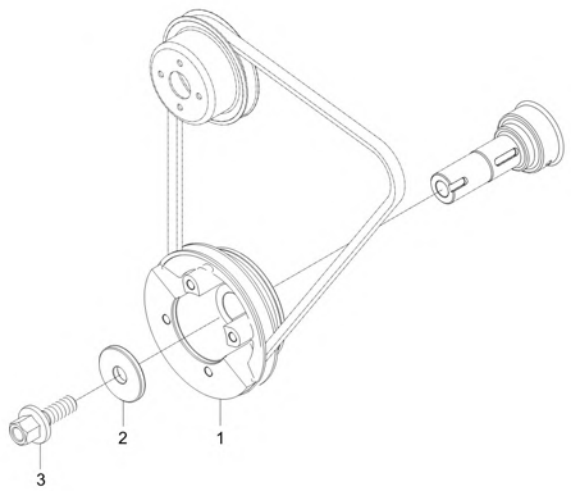

A : DK6010HSE

No.	Part Number	Description	Qty A	Qty B	Qty C	Qty D	Qty E	I.C	Remark
1	EF22-0001A	PULLEY,CRANKSHAFT	1						-
2	F6800-23501	CRANKSHAFT WASHER	1						-
3	F6800-92311	BOLT, CRANKSHAFT	1						-

----> Old replace New
<----> Interchangeable
* Please place an order assy(*)
<---- New replace Old
<-O-> Interchangeable with another part(s)
<-X-> Not interchangeable

https://tractormanualz.com/

EF2-G128001

TURBO PIPE GROUP

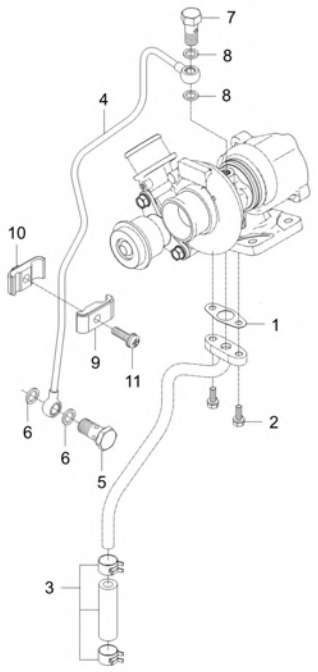

A : DK6010HSE

No.	Part Number	Description	Qty A	Qty B	Qty C	Qty D	Qty E	I.C	Remark
1	F6800-33671	GASKET	1						
2	01023-50618	BOLT w- WASHER	2						
3	E6500-33201	HOSE, OIL ASS`Y	1						
4	F5800-33041	OIL FEEDING PIPE ASSY	1						
5	E5629-24401	EYE BOLT	1						
6	04724-00120	PACKING	2						T2.0
7	E6500-95802	CONNECTOR 2	1						
7	E6500-95803	CONNECTOR 2	1					<------	
8	E6301-33661	GASKET	2						
9	E6520-34011	CLAMP 1, HOSE	1						
10	E6520-34021	CLAMP 2, HOSE	1						
11	01202-50625	BOLT WASHER	1						

----> Old replace New
<---- New replace Old
<-X-> Not interchangeable
<---> Interchangeable
<-O-> Interchangeable with another part(s)
* Please place an order assy(*)

https://tractormanualz.com/

EF2-G129001

AFTER TREATMENT GROUP

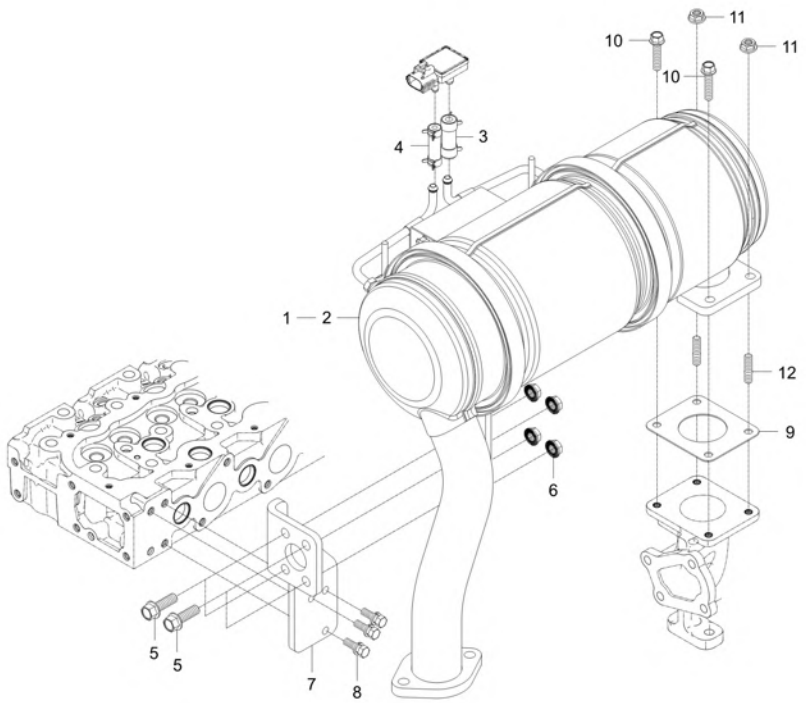

A : DK6010HSE

No.	Part Number	Description	Qty A	Qty B	Qty C	Qty D	Qty E	I.C	Remark
1	F5830-25101	CCRT ASSY	1						N
2	F6800-25101014	DOC vdnr	1						DIA143.7 x 76.2
3	F6800-26661	TUBE, 1	1						
4	F6800-26671	TUBE, 2	1						
5	01133-51032	BOLT	4						M10*P1.25
6	02783-50100	FLANGE NUT	4						M10XP1.25
7	F5830-25423	BRACKET	1						T=8.0
8	01123-50822	WASHER BOLT	3						M8XP1.25
9	F6800-12371	GASKET, TURBOCHARGER FLANGE	1						
10	F6800-92411	FLANGEBOLT	2						M8x1.25 25mm
11	F6800-91911	U-NUT	2						-
12	F6800-92441	BOLT, STUD	2						

----> Old replace New <---- New replace Old <-X-> Not interchangeable
<---> Interchangeable <-O-> Interchangeable with another part(s)
* Please place an order assy(*)

https://tractormanualz.com/

EF2-G130001

ECU GROUP

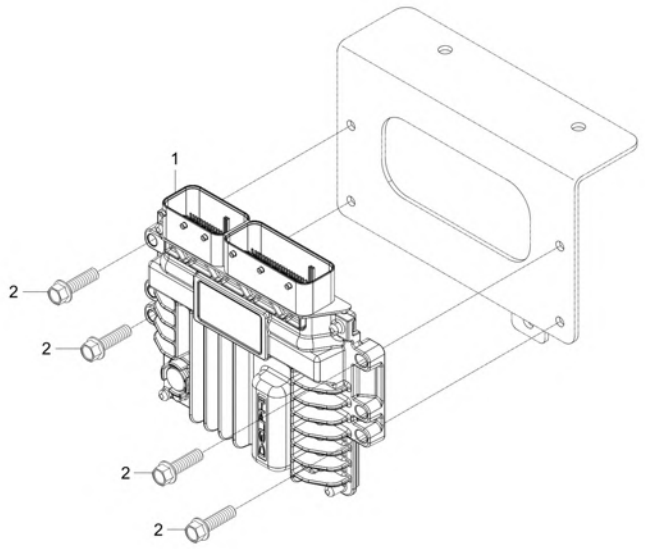

A : DK6010HSE

No.	Part Number	Description	Qty A	Qty B	Qty C	Qty D	Qty E	I.C	Remark
1	F6800-26102	333...ENG ECU T4 -Need Program v	1 ~ VGG700004						
1	EH39-0001A	050 - CONTROLLER, ENGINE dnr v	1 VGG700005 ~ WGG700024					<----->	
2	01754-50625	BOLT, FLANGE	6						7T

----> Old replace New
<---> Interchangeable
* Please place an order assy(*)
<---- New replace Old
<-O-> Interchangeable with another part(s)
<-X-> Not interchangeable

https://tractormanualz.com/

EF2-G133505

ELECTRICAL PARTS GROUP

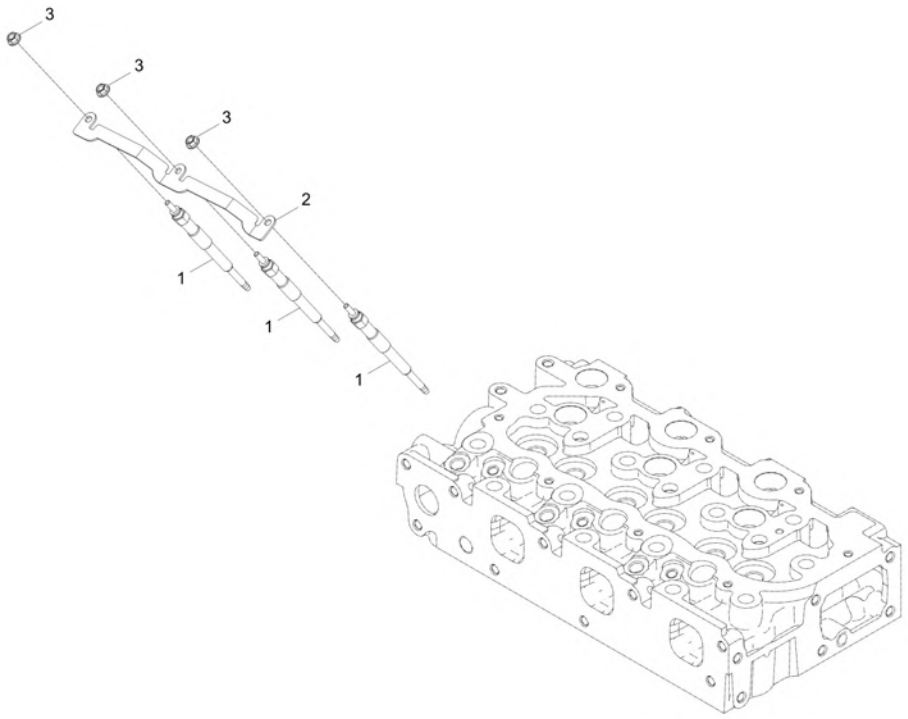

A : DK6010HSE

No.	Part Number	Description	Qty A	Qty B	Qty C	Qty D	Qty E	I.C	Remark
1	F6800-65511	PLUG,GLOW	3						N
2	F5800-65561	CORD,GLOW PLUG	1						
3	02761-50040	NUT, FLANGE	3						

----> Old replace New
<---- New replace Old
<-X-> Not interchangeable
<---> Interchangeable
<-O-> Interchangeable with another part(s)
* Please place an order assy(*)

https://tractormanualz.com/

EF2-G156003

FUEL FILTER GROUP

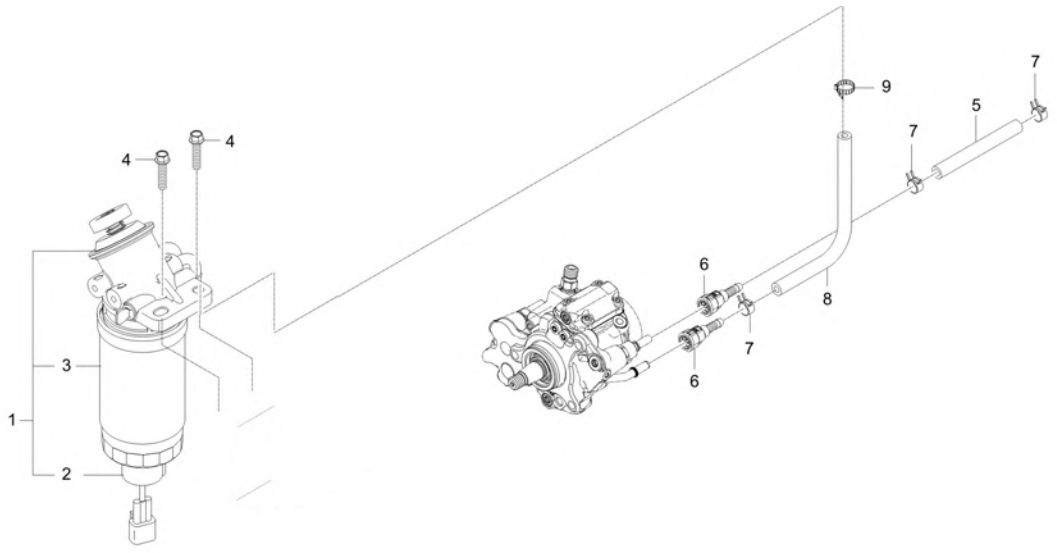

A : DK6010HSE

No.	Part Number	Description	Qty A	Qty B	Qty C	Qty D	Qty E	I.C	Remark
1	F5805-16402	FILTER, FUEL ASSY v	1						
2	F6800-16121	SENSOR, FUEL WATER	1						
3	F6800-16411	FILTER, FUEL v	1						
4	01754-50835	BOLT v	2						
5	09661-80450	HOSE	1						
6	F6800-16131	QUICK CONNECTOR	3						-
7	14911-4275-1	CLIP, TUBE	3						T0.8*#12
8	09661-80300	HOSE	1						-
9	F6800-91851	BAND, HOSE	1						12-22mm

----> Old replace New
<---- New replace Old
<-X-> Not interchangeable
<---> Interchangeable
<-O-> Interchangeable with another part(s)
* Please place an order assy(*)

https://tractormanualz.com/

EF2-G164001

COOLING FAN GROUP

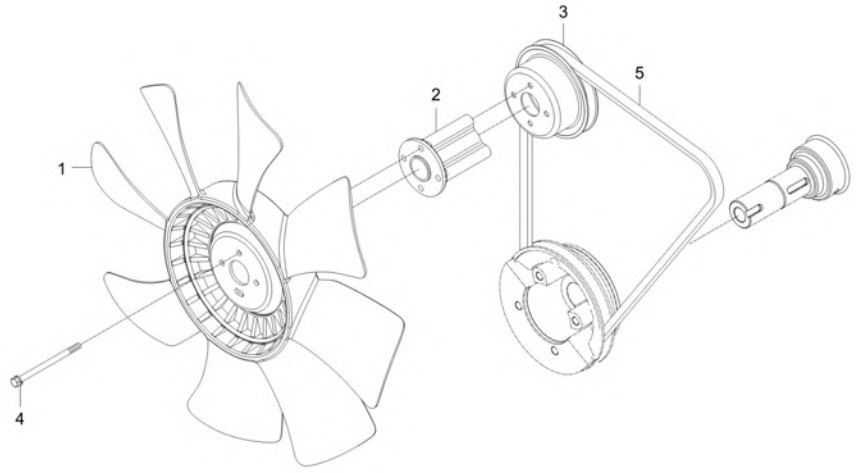

A : DK6010HSE

No.	Part Number	Description	Qty A	Qty B	Qty C	Qty D	Qty E	I.C	Remark
1	E6520-74111	FAN, COOLING v	1						
2	E5850-74151	COLLAR,FAN	1						
3	E5616-74252ED	PULLEY, FAN	1						
4	01023-50680	BOLT v	4						
5	F6820-72531	FAN BELT	1						REC A. 43
5	EH16-0003A	BELT, FAN	1					<------	REC GREEN -1 LA43

----> Old replace New
<---- New replace Old
<-X-> Not interchangeable
<---> Interchangeable
<-O-> Interchangeable with another part(s)
* Please place an order assy(*)

https://tractormanualz.com/

EF3-G156001

FUEL FILTER GROUP

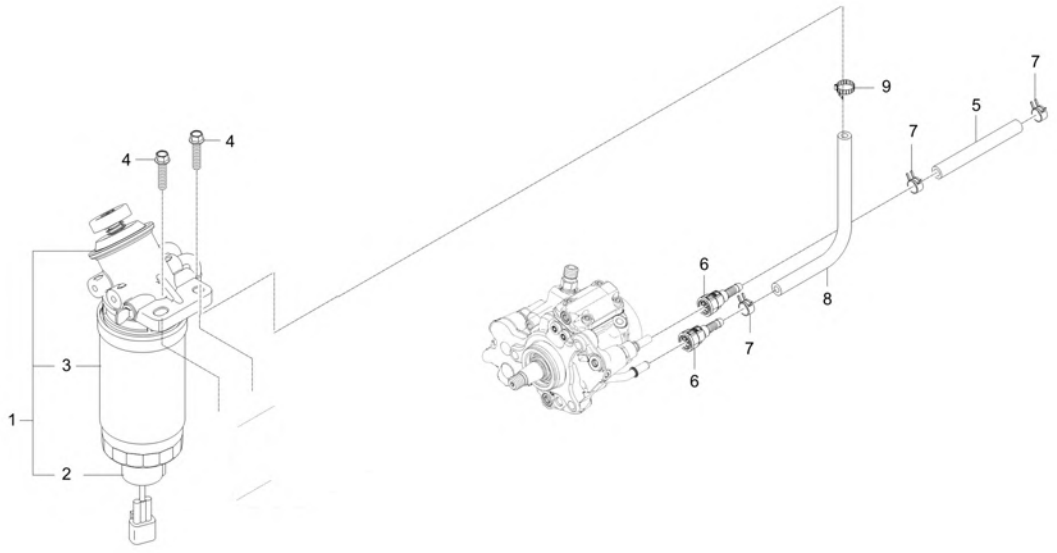

A : DK6010HSE

No.	Part Number	Description	Qty A	Qty B	Qty C	Qty D	Qty E	I.C	Remark
1	F5805-16402	FILTER, FUEL ASSY v	1						
2	F6800-16121	SENSOR, FUEL WATER	1						
3	F6800-16411	FILTER, FUEL v	1						
4	01754-50835	BOLT v	2						
5	09661-80450	HOSE	1						
6	F6800-16131	QUICK CONNECTOR	3						-
7	14911-4275-1	CLIP, TUBE	3						T0.8*#12
8	09661-80300	HOSE	1						-
9	F6800-91851	BAND, HOSE	1						12-22mm

----> Old replace New
<---- New replace Old
<-X-> Not interchangeable
<---> Interchangeable
<-O-> Interchangeable with another part(s)
* Please place an order assy(*)

https://tractormanualz.com/

TD2-G112007

COOLING FAN GROUP

A : DK6010HSE

No.	Part Number	Description	Qty A	Qty B	Qty C	Qty D	Qty E	I.C	Remark
1	E5616-74252ED	PULLEY, FAN	1						
2	E5850-74151	COLLAR,FAN	1						
3	E6520-74111	FAN, COOLING v	1						
4	01023-50680	BOLT v	4						
5	EH16-0003A	BELT, FAN	1						REC GREEN -1 LA43

----> Old replace New
<---- New replace Old
<-X-> Not interchangeable
<---> Interchangeable
<-O-> Interchangeable with another part(s)
* Please place an order assy(*)

https://tractormanualz.com/

TD2-G118009

ENGINE LABEL GROUP

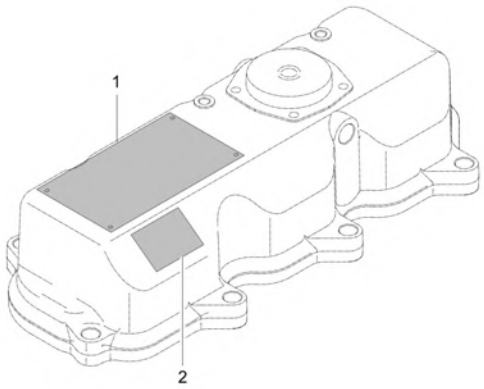

A : DK6010HSE

No.	Part Number	Description	Qty A	Qty B	Qty C	Qty D	Qty E	I.C	Remark
1	EH28-0013A	LABEL, EPA CERTIFICATE-(KIOTI)	1						
1	EH28-0013B	LABEL, EPA CERTIFICATE	1					<------	
2	F6805-99521	LABEL KIOTI	1						T=0.05-0.08
2	E5608-99522	LABEL KIOTI	1					<------	

----> Old replace New
<---- New replace Old
<-X-> Not interchangeable
<---> Interchangeable
<-O-> Interchangeable with another part(s)
* Please place an order assy(*)

https://tractormanualz.com/

F5805-G310A

EPA EEC LABEL GROUP

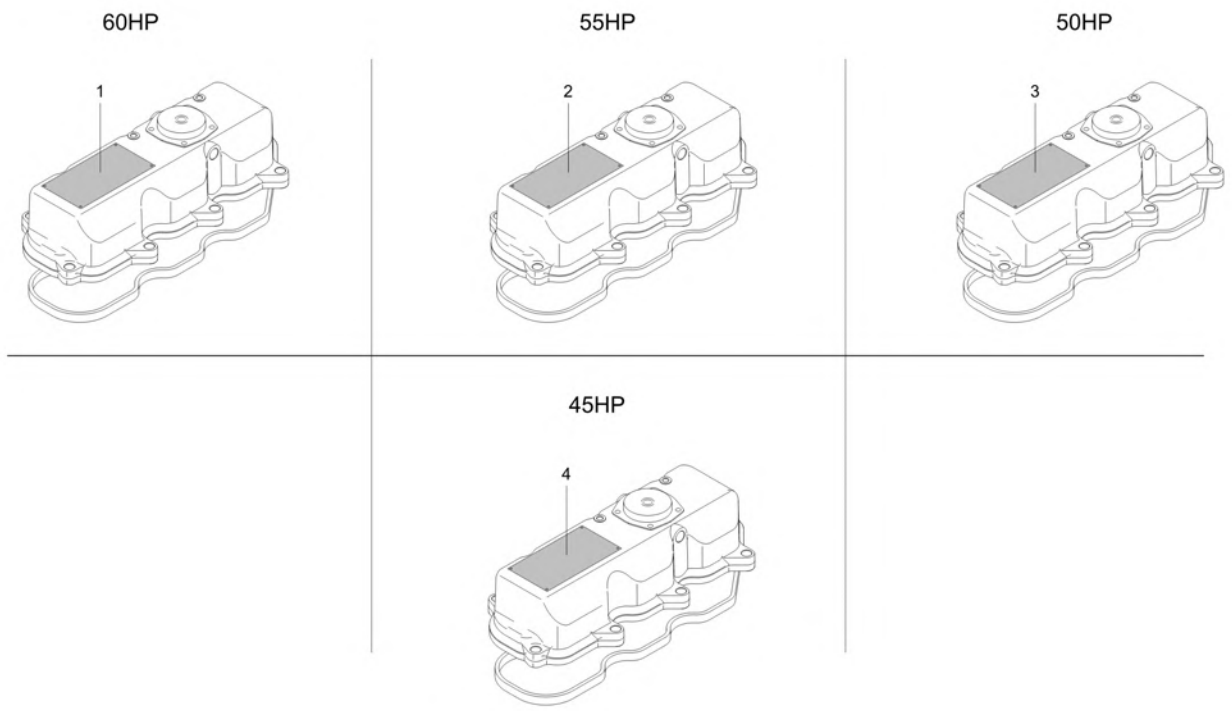

A : DK6010HSE

No.	Part Number	Description	Qty A	Qty B	Qty C	Qty D	Qty E	I.C	Remark
1	F5800-43186	LABEL dnr v	1 UGG700001 ~ UGG700108						
1	F5800-43187	LABEL v	1 VGG700001 ~ VGG700016					<------	
2	F5800-41206	LABEL	1						
2	F5800-41207	LABEL	1					<------	
3	F5800-38206	LABEL dnr v	1						
3	F5800-38207	LABEL v	1					<------	
4	F5800-34206	EPA LABEL 2018 dnr v	1						
5	F5800-34207	LABEL v	1					<------	

----> Old replace New
<---> Interchangeable
* Please place an order assy(*)
<---- New replace Old
<-O-> Interchangeable with another part(s)
<-X-> Not interchangeable

https://tractormanualz.com/

F6805-G320A

LABEL GROUP

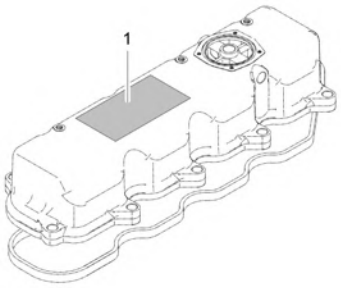

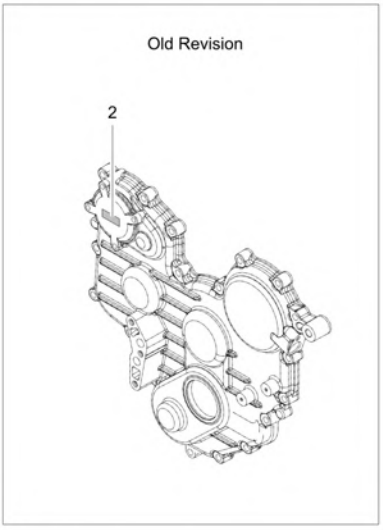

A : DK6010HSE

No.	Part Number	Description	Qty A	Qty B	Qty C	Qty D	Qty E	I.C	Remark
1	F6805-99521	LABEL KIOTI	1						T=0.05-0.08
1	E5608-99522	LABEL KIOTI	1					<------	
2	EF15-0005A	LABEL, FIE SYSTEM	1						

----> Old replace New
<---> Interchangeable
* Please place an order assy(*)
<---- New replace Old
<-O-> Interchangeable with another part(s)
<-X-> Not interchangeable

https://tractormanualz.com/

EF2-G102501

OIL GAUGE GROUP

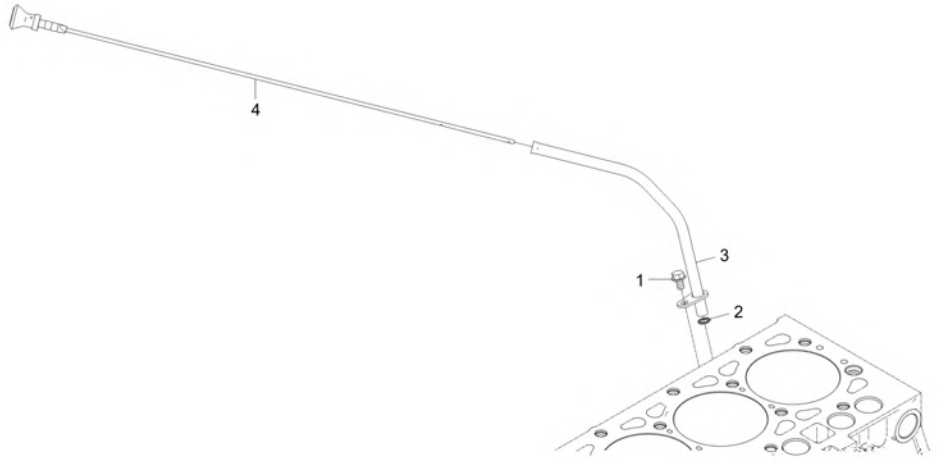

A : DK6010HSE

No.	Part Number	Description	Qty A	Qty B	Qty C	Qty D	Qty E	I.C	Remark
1	01754-50610	BOLT, FLANGE	1						M6XP1.0
2	04811-00100	O RING	1						
3	EF15-0044A	ASSYGUIDE,OILGAUGE	1						
4	F5800-36412	OIL GAUGE	1						-
4	F5800-36413	GAUGE,OIL	1					<----->	-
4	F5800-36414	GAUGE,OIL	1					<----->	-

----> Old replace New
<----> Interchangeable
* Please place an order assy(*)
<---- New replace Old
<-O-> Interchangeable with another part(s)
<-X-> Not interchangeable

https://tractormanualz.com/

TD2-G113002

INTAKE PIPE GROUP

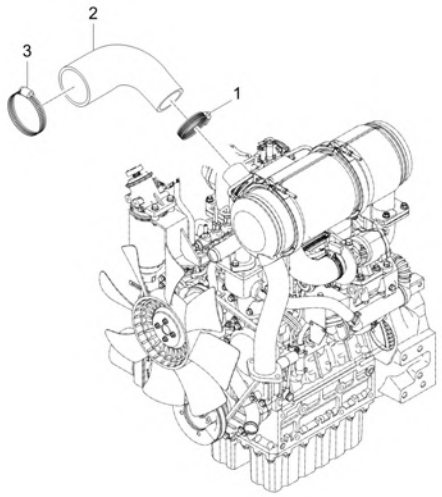

A : DK6010HSE

No.	Part Number	Description	Qty A	Qty B	Qty C	Qty D	Qty E	I.C	Remark
1	E7300-72891	CLAMP, HOSE	1						DIA60스탠 60#
2	EF23-0002A	HOSE2, INLET	1						
3	E7300-11791	CLAMP, HOSE	1						DIA85스탠 85#

----> Old replace New
<---> Interchangeable
* Please place an order assy(*)
<---- New replace Old
<-O-> Interchangeable with another part(s)
<-X-> Not interchangeable

https://tractormanualz.com/

EH2-G111001

CYLINDER BLOCK GROUP

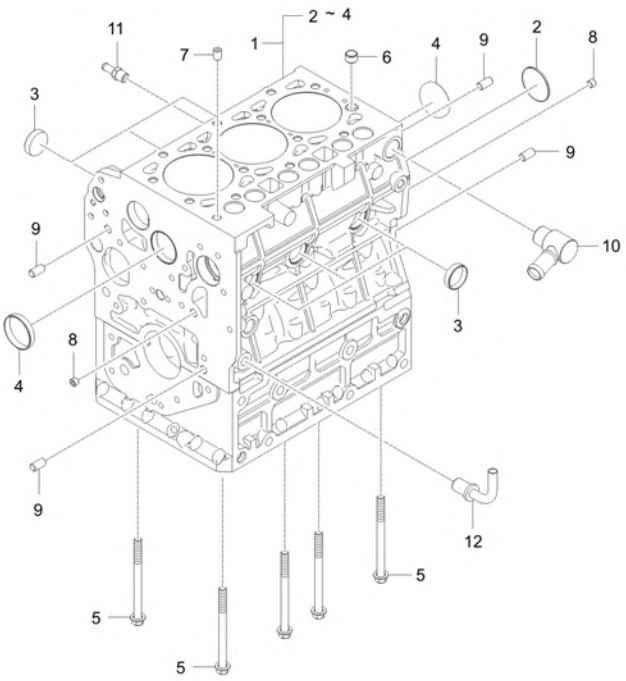

A : DK6010HSE

No.	Part Number	Description	Qty A	Qty B	Qty C	Qty D	Qty E	I.C	Remark
1	EH21-0001A	ASSY BLOCK,CYLINDER	1						
2	06311-75045	PLUG	1						T2*48*48
3	15221-0338-3	CAP, SEALING	6						-
4	15221-0339-2	CAP SEALING	2						-
5	F6800-90121	BOLT, LADDER FRAME	8						-
6	E6301-33812	PIN, PIPE	1						N
7	F6800-33651	PIN	1						-
8	E5900-96022	PLUG	4						-
9	05012-01018	PIN, STRAIGHT	4						
10	F6800-20703	COOLANT CONNECTOR ASSY	1						-
11	F6800-73341	JOINT, HOSE	1						
12	E6500-33062	TUBE 3, OIL	1						-
12	E6500-33063	PIPE, OIL-3	1					<------	-

----> Old replace New
<---- New replace Old
<-X-> Not interchangeable
<---> Interchangeable
<-O-> Interchangeable with another part(s)
* Please place an order assy(*)

https://tractormanualz.com/

EH2-G113001

CYLINDER HEAD GROUP

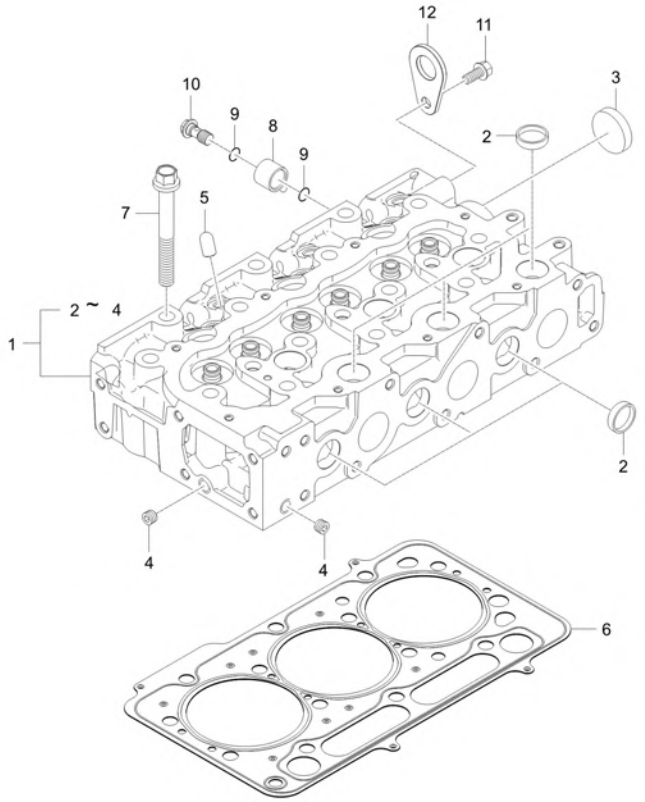

A : DK6010HSE

No.	Part Number	Description	Qty A	Qty B	Qty C	Qty D	Qty E	I.C	Remark
1	F5800-03044	ASSY HEAD,CYLINDER	1						
2	15221-0337-3	CAP SEALING	9						T1.6*40*40
3	15221-0349-3	CAP SEALING	1						T1.6*60*60
4	E5900-96022	PLUG	2						-
5	F6800-03501	HINGE, INJECTOR CLAMP	3						
6	F5800-03311	GASKET,HEAD	1						
7	F6800-03451	BOLT,CYLINDER HEAD	14						
8	F5850-73341	CONNECTOR, COOLANT	1						
9	04814-00160	O RING	2						
10	T4260-62552	JOINT BOLT	1						
11	01754-50816	BOLT, FLANGE	1						M8XP1.25
12	15221-0175-1	ENGINE HOOK	1						T4*40*64

----> Old replace New <---- New replace Old <-X-> Not interchangeable
<---> Interchangeable <-O-> Interchangeable with another part(s)
* Please place an order assy(*)

https://tractormanualz.com/

EH2-G114001

GEAR CASE GROUP

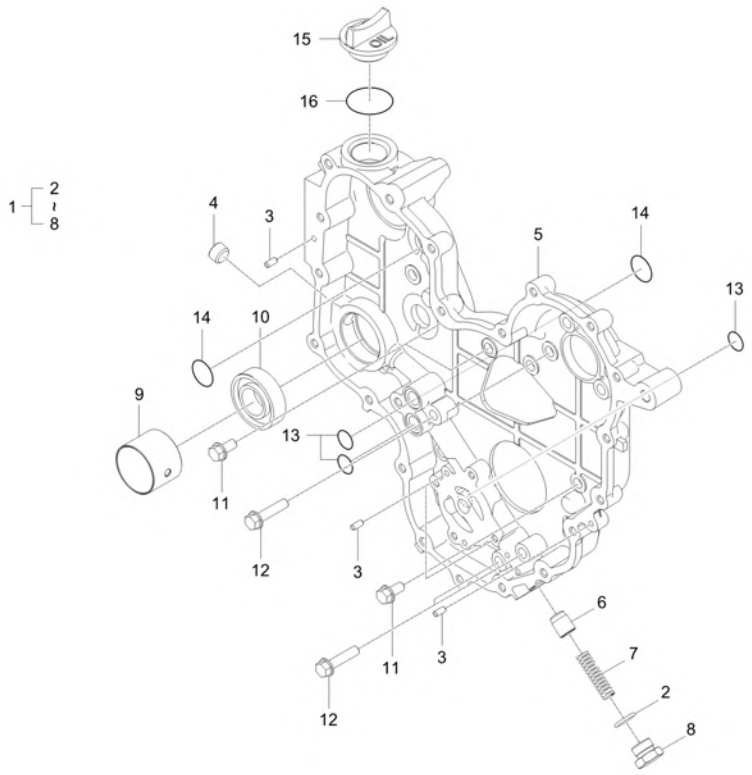

A : DK6010HSE

No.	Part Number	Description	Qty A	Qty B	Qty C	Qty D	Qty E	I.C	Remark
1	EH23-0003A	ASSY GEAR CASE	1						
1	EH23-0003B	ASSY GEAR CASE	1					<------	
1	EH23-0003C	ASSY GEAR CASE	1					<----->	
2	04811-00160	O RING	1						DIA15.8
3	05012-00510	PIN,STRAIGHT	4						
4	E5800-96032	PLUG	1						PT3/8
5	F5800-04114	GEAR CASE v	1						-
5	F5800-04115	GEAR CASE	1					<----->	-
5	F5800-04116	GEAR CASE	1					<----->	-
6	F6720-04711	PLUNGER, RELIEF VALVE v	1						N
6	F6720-04712	PLUNGER, RELIEF VALVE	1					<----->	-
7	F6720-04721	SPRING, RELIEF VALVE	1						DIA1.8
8	EF44-0023A	PLUG, RELIEF VALVE	1						-
9	F6800-04501	BUSH, PTO SHAFT	1						
10	08101-06205	BEARING BALL dnr v	1						DIA25
11	01754-50816	BOLT, FLANGE	10						M8XP1.25
12	01754-50835	BOLT v	3						
13	04816-00150	O_RING	3						DIA14.8

----> Old replace New
<---- New replace Old
<-X-> Not interchangeable
<---> Interchangeable
<-O-> Interchangeable with another part(s)
* Please place an order assy(*)

https://tractormanualz.com/

EH2-G114001

GEAR CASE GROUP

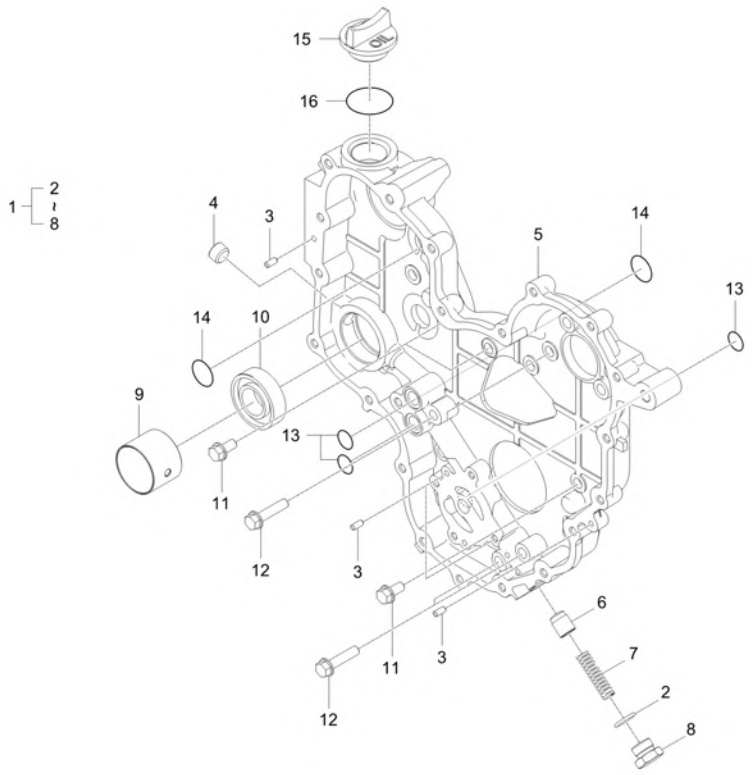

A : DK6010HSE

No.	Part Number	Description	Qty A	Qty B	Qty C	Qty D	Qty E	I.C	Remark
14	04816-00220	O_RING dnr v	2						DIA21.8
15	E5500-33142	PLUG, OIL FILLER	1						
16	04811-50300	O RING v	1						G30

----> Old replace New
<---- New replace Old
<-X-> Not interchangeable
<---> Interchangeable
<-O-> Interchangeable with another part(s)
* Please place an order assy(*)

https://tractormanualz.com/

EH2-G115001

GEAR CASE COVER GROUP

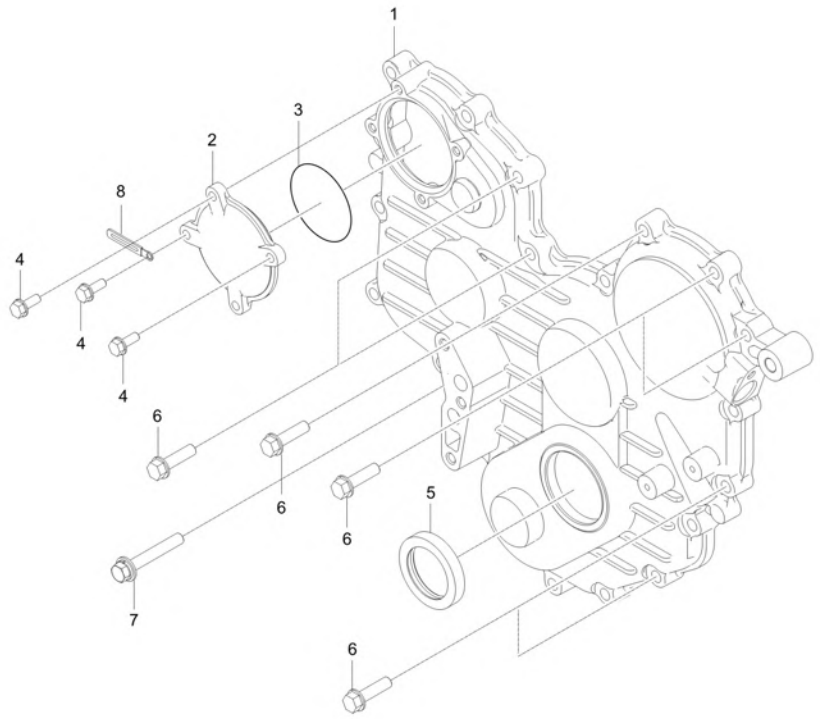

A : DK6010HSE

No.	Part Number	Description	Qty A	Qty B	Qty C	Qty D	Qty E	I.C	Remark
1	F6800-04215	COVER, GEAR CASE v	1						-
2	F6800-04251	COVER, HP PUMP GEAR	1						
3	04811-06630	O RING	1						Dia63
4	01754-50616	BOLT, FLANGE v	4						M6*P1.0
5	E5500-11302	OIL SEAL	1						
6	01754-50830	BOLT FLANGE	20						M8*P1.25
7	01125-50855	BOLT	1						
8	34150-2939-1	CLAMP, WIRE	2						-

----> Old replace New
<---- New replace Old
<-X-> Not interchangeable
<---> Interchangeable
<-O-> Interchangeable with another part(s)
* Please place an order assy(*)

https://tractormanualz.com/

EH2-G116001

CYLINDER HEAD COVER GROUP

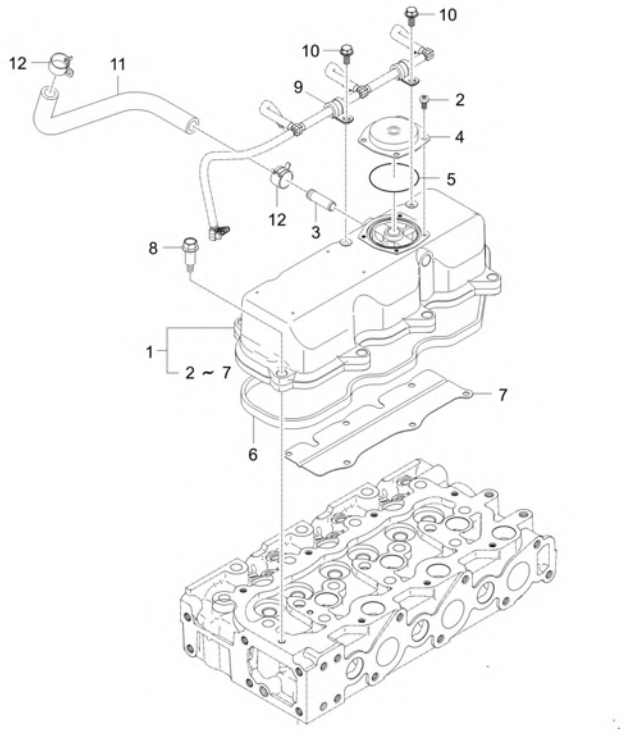

A : DK6010HSE

No.	Part Number	Description	Qty A	Qty B	Qty C	Qty D	Qty E	I.C	Remark
1	F5850-14501	CYLINDER HEAD COVER ASSEMBLY v	1						
2	03024-50510	SCREW, WASHER	4						M5*P0.8
3	E6510-05552	CONNECTOR, AIR BREATHER HOSE	1						N
4	E6510-14532	COVER, VALVE	1						N
5	E6510-14671	O RING	1						N
6	F5800-14521	GASKET, CYLINDER HEAD COVER	1						
7	F5800-14561	PROTECT PLATE OF OIL	1						
8	E6510-33661	BOLT, CYLINDER HEAD COVER v	8						
9	F6800-15122	CLAMP, HOSE	2						
10	01754-50610	BOLT, FLANGE	2						M6XP1.0
11	F5830-05511	HOSE, BLOW BY	1						N
12	09318-88180	CLAMP, HOSE	2						

----> Old replace New
<---- New replace Old
<-X-> Not interchangeable
<---> Interchangeable
<-O-> Interchangeable with another part(s)
* Please place an order assy(*)

https://tractormanualz.com/

EH2-G117001

FLYWHEEL HOUSING GROUP

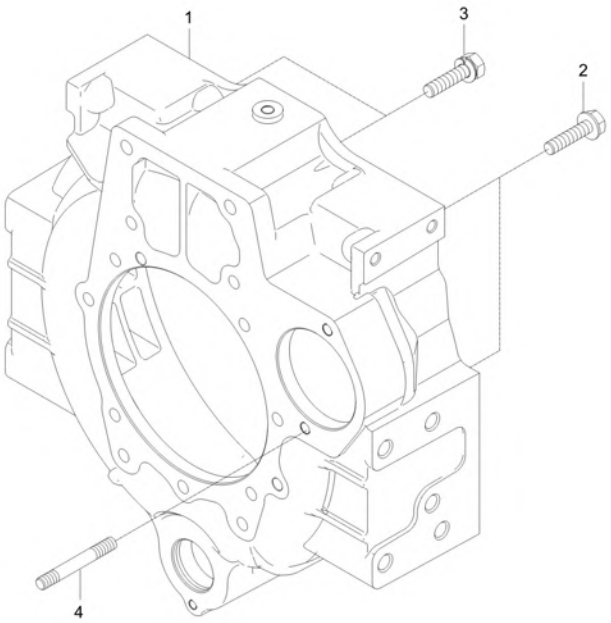

A : DK6010HSE

No.	Part Number	Description	Qty A	Qty B	Qty C	Qty D	Qty E	I.C	Remark
1	F5831-04612	HOUSING, FLYWHEEL	1						
2	EF11-0001A	BOLT,FLANGEWITHPIN	11						HRC20-28
3	01133-51240	BOLT, WASHER	2						M12XP1.25
4	01517-51028	STUD	1						M10XP1.25

----> Old replace New
<---> Interchangeable
* Please place an order assy(*)
<---- New replace Old
<-O-> Interchangeable with another part(s)
<-X-> Not interchangeable

https://tractormanualz.com/

EH2-G121001

CRANK SHAFT GROUP

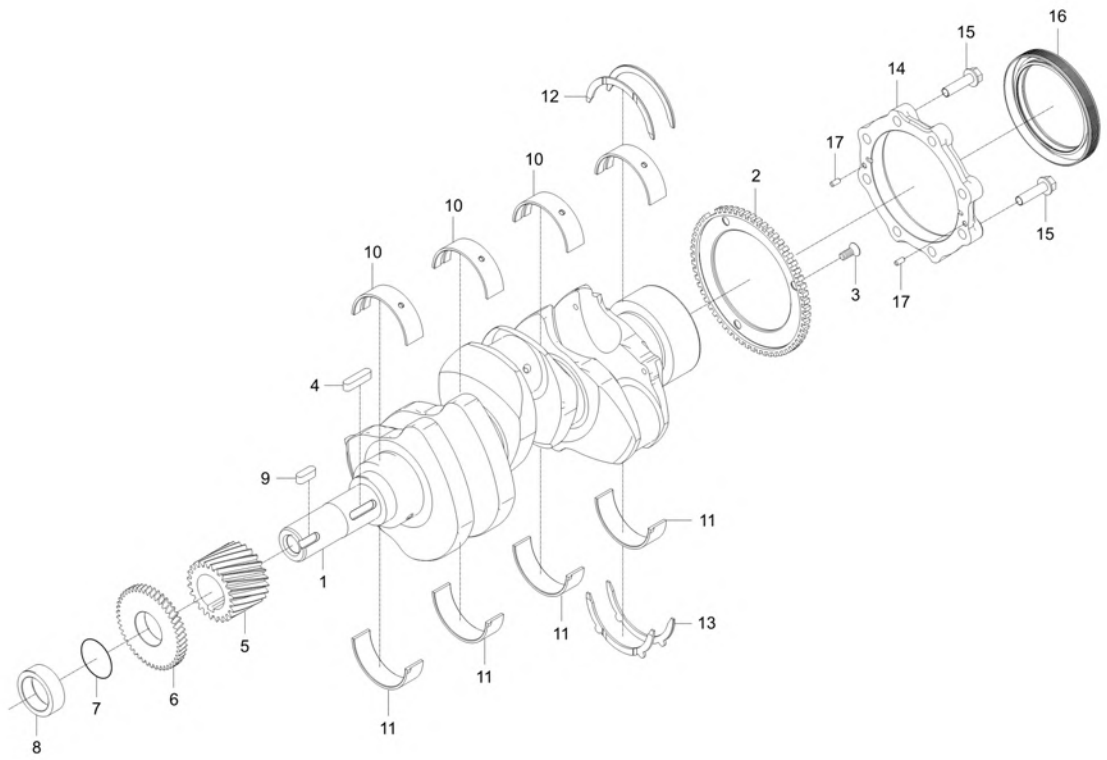

A : DK6010HSE

No.	Part Number	Description	Qty A	Qty B	Qty C	Qty D	Qty E	I.C	Remark
1	F5800-23111	SHAFT CRANK dnr v	1						
2	F5800-06201	WHEEL, CRANK POSITION SENSOR	1						
3	03016-50616	SCREW	3						M6XP1.0
4	05712-00730	KEY	1						W7XL30
5	F6800-24111	CRANKSHAFT GEAR	1						
6	F6800-35631	GEAR OIL PUMP DRIVE	1						
7	04811-10300	O RING	1						
8	19202-2325-1	CRANKSHAFT COLLAR	1						DIA44*20
9	05712-00720	KEY	1						8*8*24
10	F6800-23481	BEARING, CRANKSHAFT UPR	4						
11	F6800-23491	BEARING, CRANKSHAFT LWR	4						
12	F6800-23531	BEARING, CRANKSHAFT THRUST UPR	2						
13	F6800-23541	BEARING, CRANKSHAFT THRUST LWR	2						
14	F6800-04811	CASE,OIL SEAL	1						
15	01654-50830	FLANGE BOLT	8						7T
16	E5500-04464	OIL SEAL v	1						
17	05012-00408	STRAIGHT PIN	2						

----> Old replace New
<---> Interchangeable
* Please place an order assy(*)
<---- New replace Old
<-O-> Interchangeable with another part(s)
<-X-> Not interchangeable

https://tractormanualz.com/

EH2-G122001

PISTON_CONNECTING ROD GROUP

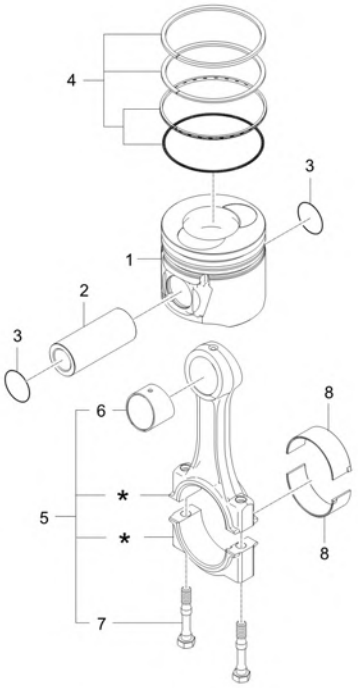

A : DK6010HSE

No.	Part Number	Description	Qty A	Qty B	Qty C	Qty D	Qty E	I.C	Remark
1	F6720-21111	PISTON	3						
2	F5800-21311	PIN, PISTON	3						N
3	F5800-21331	RING, SNAP	6						N
4	E6302-21051	PISTON RING Assy	3						
5	F6800-22011	CONNECTING ROD	3						
6	F6800-21351	BUSH,PISTON PIN	1						
7	F6800-22141	BOLT	2						N
8	EF15-0004A	BEARING, CONNECTING ROD	6						

----> Old replace New
<---> Interchangeable
* Please place an order assy(*)
<---- New replace Old
<-O-> Interchangeable with another part(s)
<-X-> Not interchangeable

https://tractormanualz.com/

EH2-G123001

CAMSHAFT GROUP

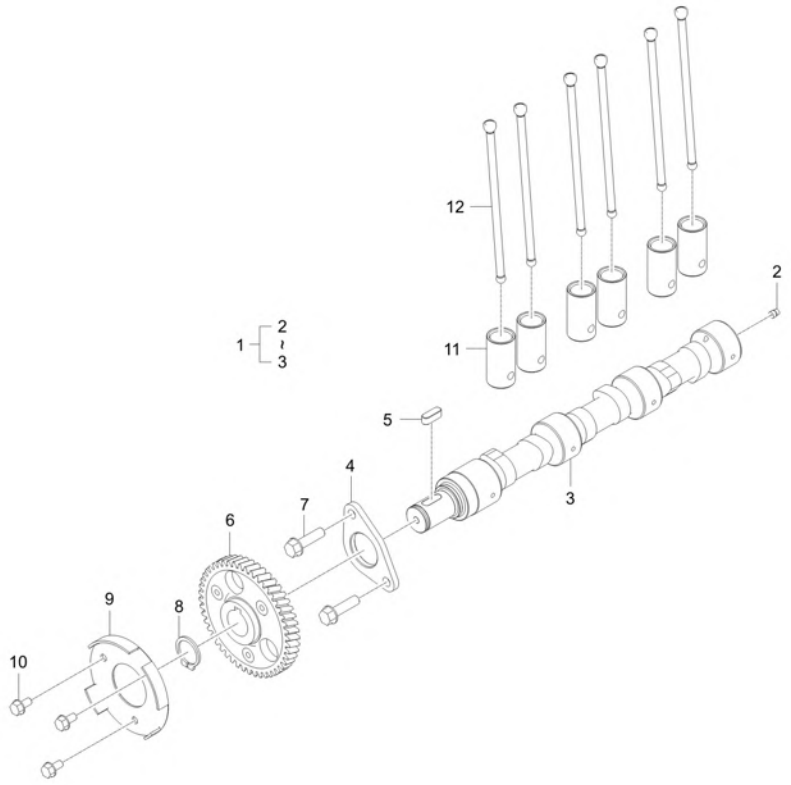

A : DK6010HSE

No.	Part Number	Description	Qty A	Qty B	Qty C	Qty D	Qty E	I.C	Remark
1	F5800-16012	ASSY CAMSHAFT v	1						N
2	06350-00607	PLUG v	2						
3	F5800-16152	CAMSHAFT	1						N
4	F6800-16271	STOP, CAM SHAFT	1						
5	05712-00720	KEY	1						8*8*24
6	F6800-16511	CAMSHAFT GEAR	1						
7	01754-50830	BOLT FLANGE	2						M8*P1.25
8	E5205-24321	SNAP RING	1						T2
9	F6800-09051	WHEEL, CAMSHAFT SENSOR	1						2T
10	01754-50612	BOLT, FLANGE	3						M6*1.0
11	E5500-15553	TAPPET	6						DIA26*51
12	F6800-15111	ROD PUSH v	6						

----> Old replace New
<---> Interchangeable
* Please place an order assy(*)
<---- New replace Old
<-O-> Interchangeable with another part(s)
<-X-> Not interchangeable

https://tractormanualz.com/

EH2-G124001

IDLE GEAR GROUP

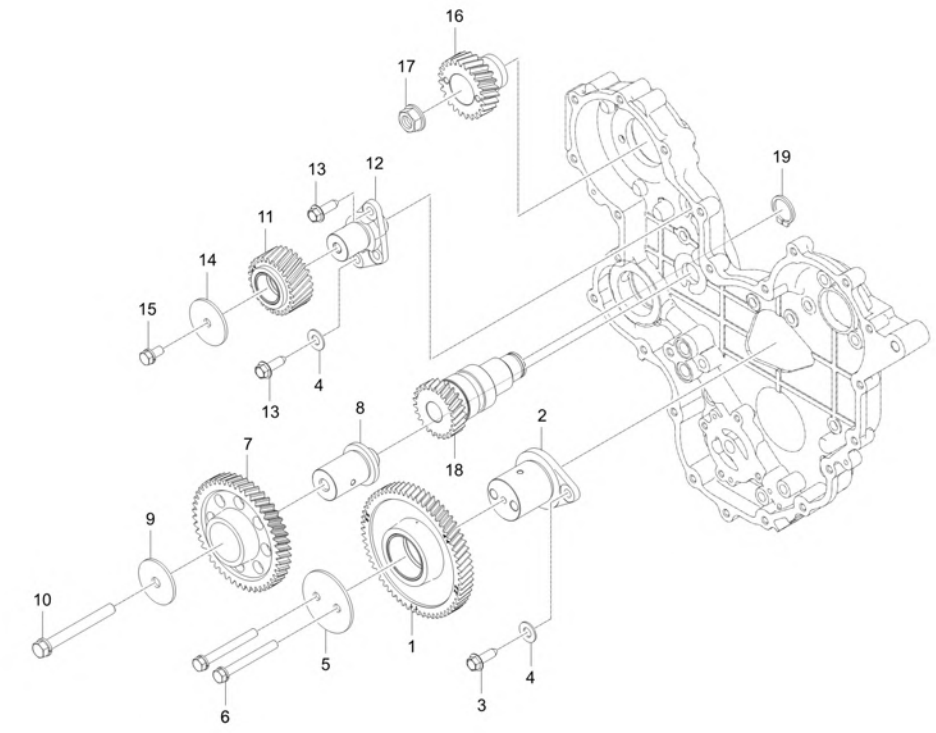

A : DK6010HSE

No.	Part Number	Description	Qty A	Qty B	Qty C	Qty D	Qty E	I.C	Remark
1	F5850-10102	Assy IDLE GEAR1	1						-
2	F6800-10155	SHAFT,IDLEGEAR1 v	1						-
3	EF15-0030A	FLANGE BOLT v	2						
4	EF15-0029A	NORD-LOCK WASHER v	3						
5	F6800-10163	STOPPER 1, IDLE GEAR	1						-
6	01123-50870	WASHER BOLT	2						
7	F6800-10301	IDLE GEAR ASSY, 3	1						
8	F6800-10353	SHAFT 3, IDLE GEAR v	1						-
9	F6800-10261	STOPPER, IDLE GEAR 2	1						
10	01133-51090	BOLT	1						P1.25
11	F6800-10401	IDLE GEAR ASSY, 4	1						
12	F6800-10455	SHAFT,IDLEGEAR4 v	1						-
13	EF15-0038A	BOLT, FLANGE	3						-
14	F6800-10261	STOPPER, IDLE GEAR 2	1						
15	EF15-0039A	BOLT, WITH WASHER	1						-
16	EH32-0001A	GEAR, HP FUEL PUMP	1						-
17	F6800-92771	FLANGE NUT	1						M14x1.5
18	F6800-10612	GEAR, HYDRAULIC PUMP DRIVE	1						-

----> Old replace New
<----> Interchangeable
* Please place an order assy(*)
<---- New replace Old
<-O-> Interchangeable with another part(s)
<-X-> Not interchangeable

https://tractormanualz.com/

EH2-G124001

IDLE GEAR GROUP

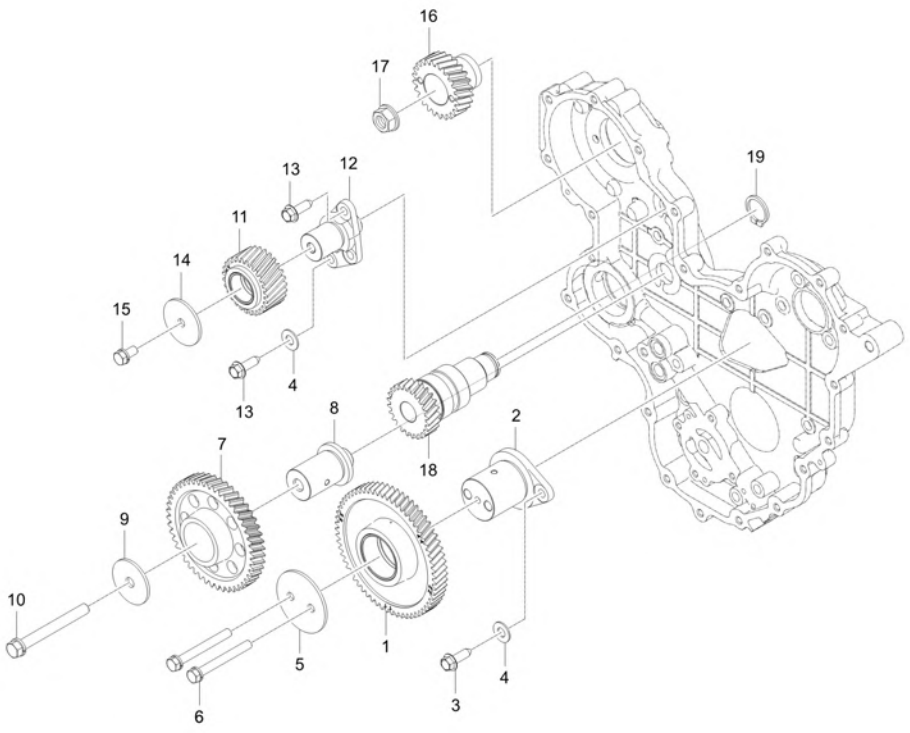

A : DK6010HSE

No.	Part Number	Description	Qty A	Qty B	Qty C	Qty D	Qty E	I.C	Remark
19	15471-9536-1	SNAP_RING	1						

----> Old replace New
<---> Interchangeable
* Please place an order assy(*)
<---- New replace Old
<-O-> Interchangeable with another part(s)
<-X-> Not interchangeable

https://tractormanualz.com/

EH2-G125001

ROCKER ARM_VALVE GROUP

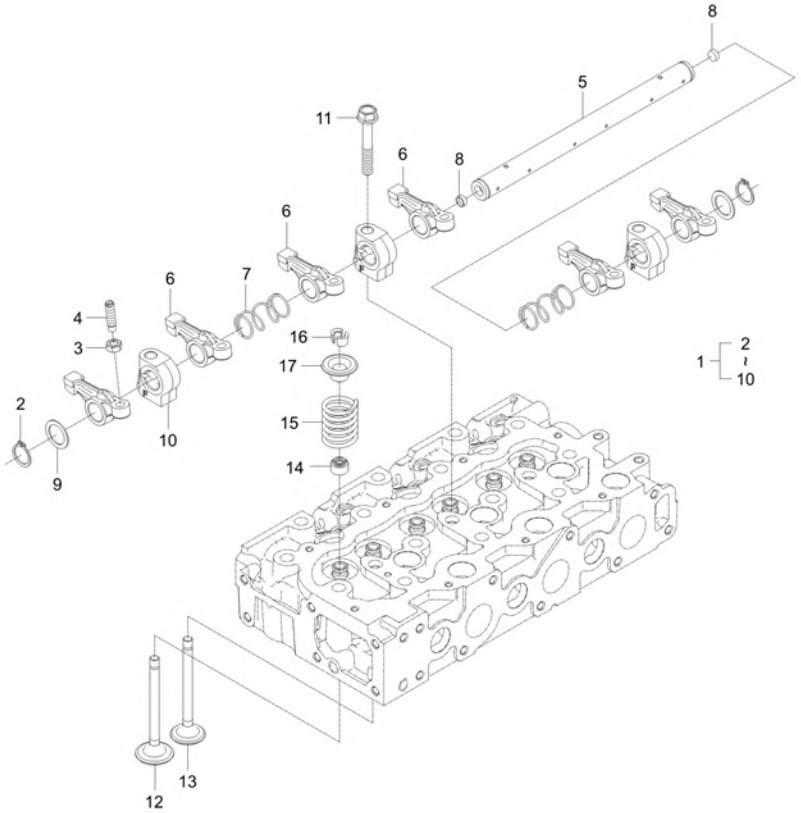

A : DK6010HSE

No.	Part Number	Description	Qty A	Qty B	Qty C	Qty D	Qty E	I.C	Remark
1	F5800-14001	ASSY ARM,ROCKER	1						
2	04612-00190	SNAP RING	2						
3	15021-1424-1	NUT	6						HEX12,M8*1.0*11
4	E5500-14232	SCREW,ADJUSTING	6						DIA10,M8*1.0*34
5	E5800-14261	SHAFT,ROCKER ARM	1						
6	E6301-14111	ROCKERARM	6						
7	E6301-14311	ROCKERARM SPRING	2						
8	E6301-14331	CAP, SEALING obs v	2						
9	E6301-14431	PLAIN WASHER	2						T1.2*30*30
10	F6800-14351	BRACKET, ROCKER ARM	3						
11	E6510-91502	BOLT,(R/A SUPPORT) v	3						
12	E6700-13111	VALVE, INTAKE	3						
13	E6700-13121	EXHAUST VALVE v	3						
14	E6301-13151	SEAL, VALVE STEM	6						
15	E6400-13241	SPRING, VALVE	6						
16	E6403-13361	COLLET,VALVE SPRING v	12						KK8(독일 TRW)
17	E5500-13333	RETAINER VALVE SPRING v	6						

----> Old replace New <---- New replace Old <-X-> Not interchangeable
<---> Interchangeable <-O-> Interchangeable with another part(s)
* Please place an order assy(*)

https://tractormanualz.com/

EH2-G126002

FLYWHEEL GROUP

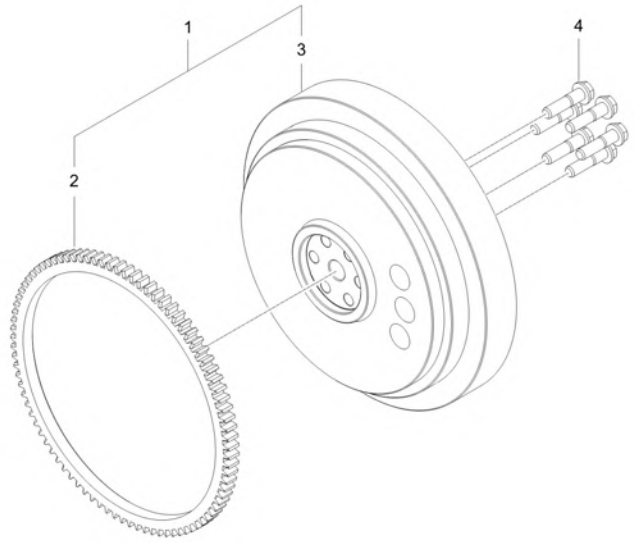

A : DK6010HSE

No.	Part Number	Description	Qty A	Qty B	Qty C	Qty D	Qty E	I.C	Remark
1	F5800-25012	ASSY FLYWHEEL	1						
1	F5800-25013	ASSY FLYWHEEL	1					<----->	
2	E7103-63821	GEAR RING (use 15221-63824) dnr v	1						
3	F5800-25112	FLYWHEEL	1						N
3	F5800-25113	FLYWHEEL	1					<----->	-
4	E5620-25161	BOLT,FLYWHEEL	6						

----> Old replace New
<----> Interchangeable
* Please place an order assy(*)
<---- New replace Old
<-O-> Interchangeable with another part(s)
<-X-> Not interchangeable

https://tractormanualz.com/

EH2-G127003

CRANK SHAFT FULLEY GROUP

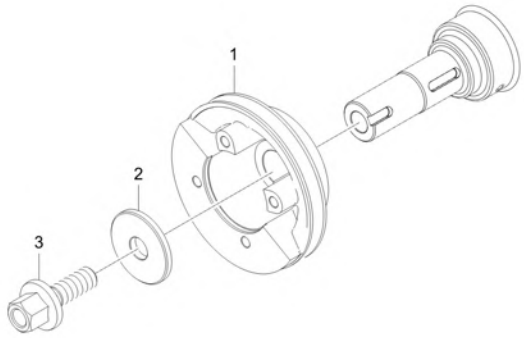

A : DK6010HSE

No.	Part Number	Description	Qty A	Qty B	Qty C	Qty D	Qty E	I.C	Remark
1	EF22-0001A	PULLEY,CRANKSHAFT	1						-
2	F6800-23501	CRANKSHAFT WASHER	1						-
3	F6800-92311	BOLT, CRANKSHAFT	1						-

----> Old replace New
<----> Interchangeable
* Please place an order assy(*)
<---- New replace Old
<-O-> Interchangeable with another part(s)
<-X-> Not interchangeable

https://tractormanualz.com/

EH2-G131001

INTAKE MANIFOLD GROUP

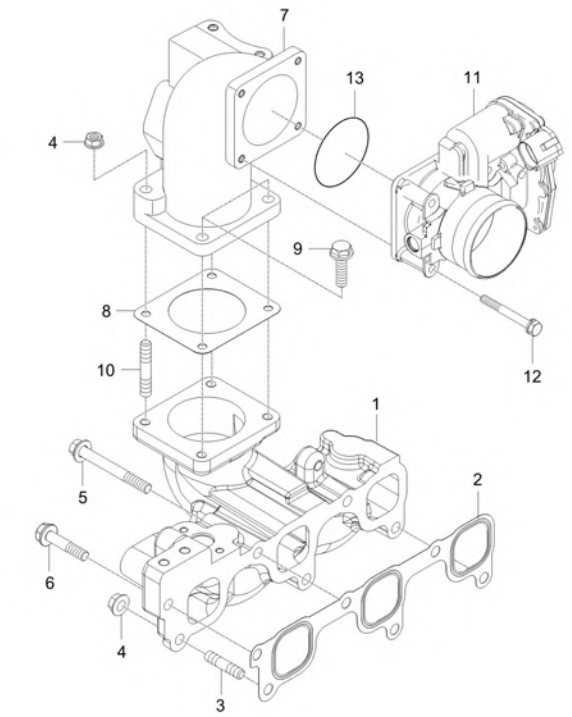

A : DK6010HSE

No.	Part Number	Description	Qty A	Qty B	Qty C	Qty D	Qty E	I.C	Remark
1	EH23-0002B	MANIFOLD, INLET	1						-
2	F5800-11821	GASKET, INTAKE MANIFOLD	1						
3	01513-50822	STUD	1						M8*1.25
4	02763-50080	FLANGE NUT	1						M8XP1.25
5	01125-50870	BOLT, WASHER	2						
6	01754-50830	BOLT FLANGE	3						M8*P1.25
7	F5830-17202	FLANGE,INTAKEMANIFOLD	1						N
8	F6800-17211	GASKET, INTAKE MANIFOLD FLANGE	1						
9	01754-50822	BOLT, FLANGE	2						
10	01513-50835	STUD	2						
11	F6800-17701	AIR CONTROL VALVE ASSY	1						
12	01023-50645	BOLT, WASHER v	4						
13	EH13-0002A	O RING-ACV v	1						

----> Old replace New <---- New replace Old <-X-> Not interchangeable
<---> Interchangeable <-O-> Interchangeable with another part(s)
* Please place an order assy(*)

https://tractormanualz.com/

EH2-G132003

INTAKE HOSE GROUP

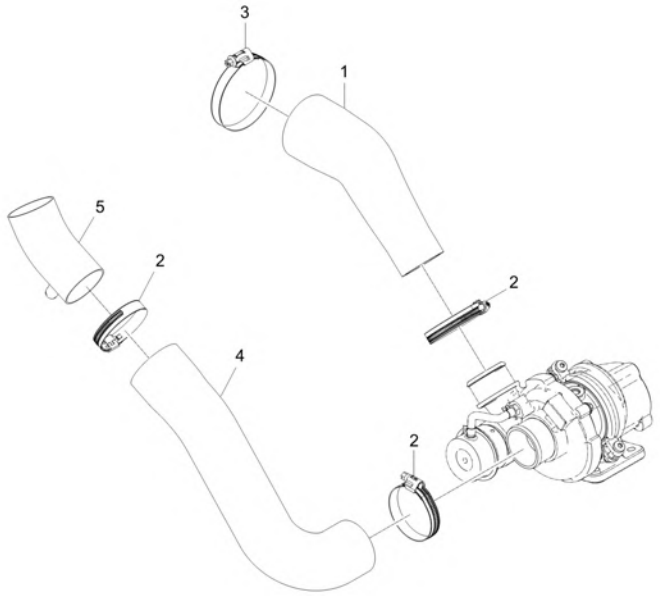

A : DK6010HSE

No.	Part Number	Description	Qty A	Qty B	Qty C	Qty D	Qty E	I.C	Remark
1	F6800-11651	HOSE, INLET	1						
2	F6800-91812	HOSE CLAMP	3						
3	F6800-91822	HOSE CLAMP	1						
4	F5810-18943	INLET HOSE, 1	1						N
5	EF23-0003A	BLOWBYCONNECTOR	1						OD5 X T1.5

----> Old replace New
<---- New replace Old
<-X-> Not interchangeable
<---> Interchangeable
<-O-> Interchangeable with another part(s)
* Please place an order assy(*)

https://tractormanualz.com/

EH2-G133001

EXHAUST MANIFOLD GROUP

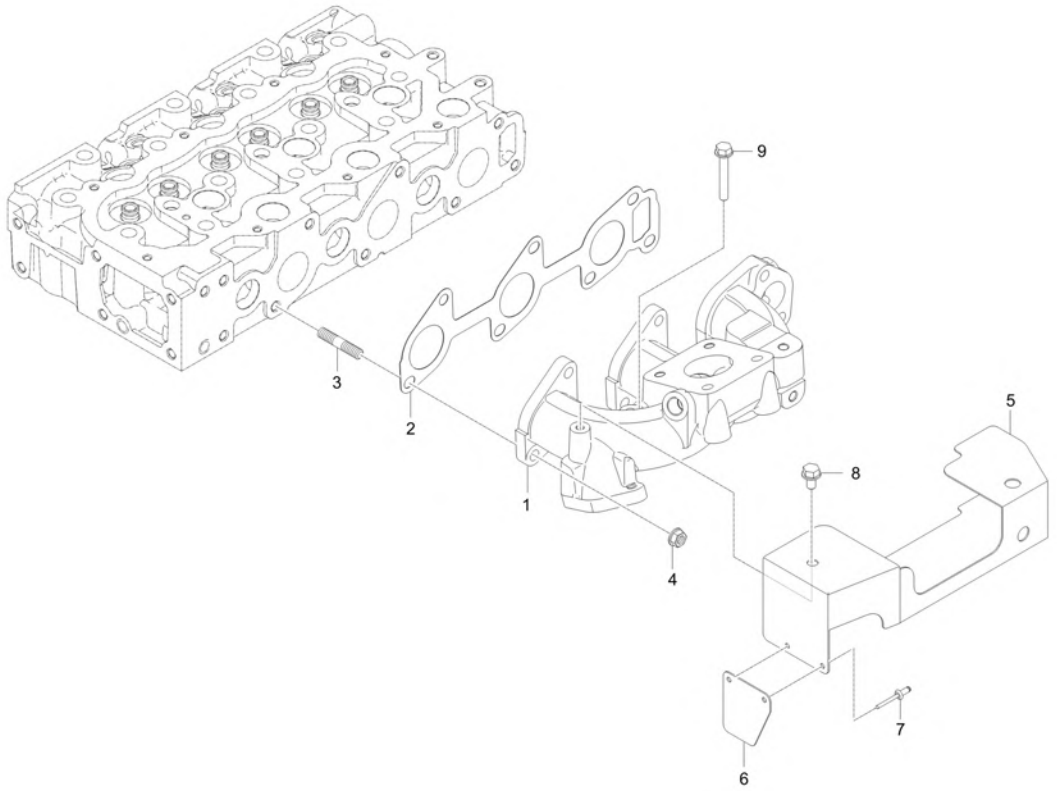

A : DK6010HSE

No.	Part Number	Description	Qty A	Qty B	Qty C	Qty D	Qty E	I.C	Remark
1	F5800-12313	MANIFOLD,EXHAUST	1						
2	F5800-12351	GASKET, EXHAUST MANIFOLD	1						
3	F6800-92451	BOLT, STUD	5						M8*P1.25
3	F6800-92452	BOLT, STUD	5					<------	M8*P1.25
4	F6800-91911	U-NUT	5						-
5	F5800-13764	PLATE,HEAT	1						t1.2
6	F5800-13773	PLATE	1						t1.2
7	F6800-94111	RIVET	2						
8	01754-50610	BOLT, FLANGE	1						M6XP1.0
9	01754-50640	FLANGE BOLT	1						

----> Old replace New
<----> Interchangeable
* Please place an order assy(*)
<---- New replace Old
<-O-> Interchangeable with another part(s)
<-X-> Not interchangeable

https://tractormanualz.com/

EH2-G134001

TURBO GROUP

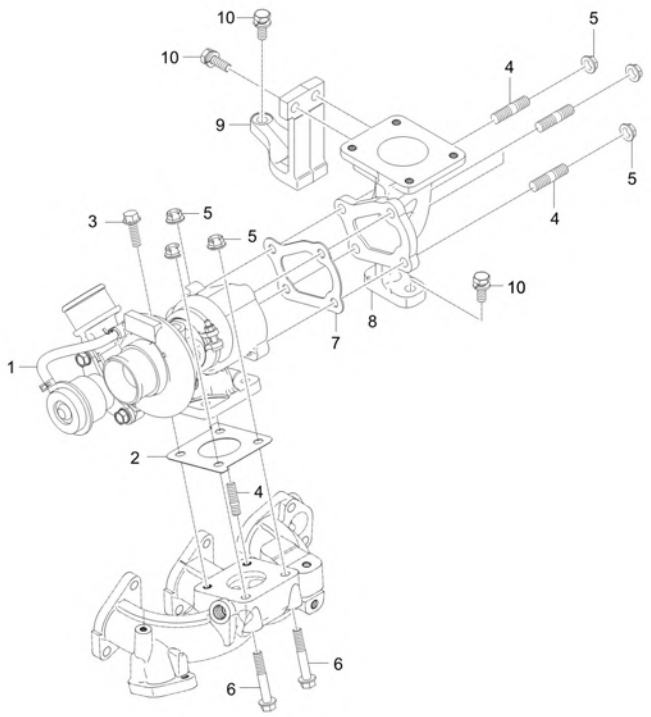

A : DK6010HSE

No.	Part Number	Description	Qty A	Qty B	Qty C	Qty D	Qty E	I.C	Remark
1	F5800-17011	TURBOCHARGER ASSY dnr v	1						
1	F5800-17012	TURBOCHARGER ASSY v	1					<----->	-
2	F6800-17101	GASKET 1, TURBOCHARGER	1						
3	F6800-92411	FLANGEBOLT	3						M8x1.25 25mm
3	F6800-92411	FLANGEBOLT	1					<----->	M8x1.25 25mm
4	F6800-92441	BOLT, STUD	3						
4	F6800-92441	BOLT, STUD	5					<----->	
5	F6800-91911	U-NUT	5						-
5	F6800-91911	U-NUT	7					<----->	-
6	F6800-92421	FLANGEBOLT	2						M8x1.25 65mm
7	F6800-17111	GASKET 2, TURBOCHARGER	1						t1.5
8	F6800-11951	FLANGE, TURBOCHARGER	1						
9	F6800-25501	SUPPORT, TURBOCHARGER FLANGE	1						
10	01123-50822	WASHER BOLT	5						M8XP1.25

----> Old replace New <---- New replace Old <-X-> Not interchangeable
<---> Interchangeable <-O-> Interchangeable with another part(s)
* Please place an order assy(*)

https://tractormanualz.com/

EH2-G135001

TURBO PIPE GROUP

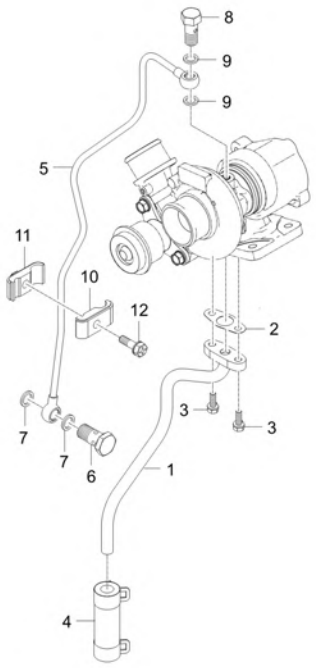

A : DK6010HSE

No.	Part Number	Description	Qty A	Qty B	Qty C	Qty D	Qty E	I.C	Remark
1	F5800-33051	OIL DRAIN PIPE ASSY	1						
2	F6800-33671	GASKET	1						
3	01023-50618	BOLT w- WASHER	2						
4	E6500-33201	HOSE, OIL ASS`Y	1						
5	F5800-33041	OIL FEEDING PIPE ASSY	1						
6	E5629-24401	EYE BOLT	1						
7	04724-00120	PACKING	2						T2.0
8	E6500-95802	CONNECTOR 2	1						
8	E6500-95803	CONNECTOR 2	1					<------	
9	E6301-33661	GASKET	2						
10	E6520-34011	CLAMP 1, HOSE	1						
11	E6520-34021	CLAMP 2, HOSE	1						
12	01202-50625	BOLT WASHER	1						
13	01202-50620	BOLT	1						

----> Old replace New
<---> Interchangeable
* Please place an order assy(*)
<---- New replace Old
<-O-> Interchangeable with another part(s)
<-X-> Not interchangeable

https://tractormanualz.com/

EH2-G141001

OIL PUMP GROUP

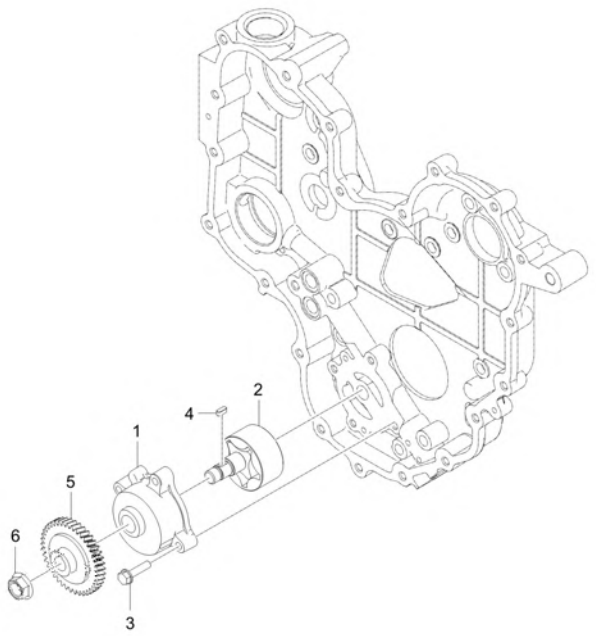

A : DK6010HSE

No.	Part Number	Description	Qty A	Qty B	Qty C	Qty D	Qty E	I.C	Remark
1	F6800-04302	COVER, OIL PUMP	1						-
2	F6800-04401	OIL PUMP ROTOR SHAFT ASSY	1						N
3	01754-50625	BOLT, FLANGE	4						7T
4	05712-00410	KEY	1						5*5*14
5	F6800-35661	GEAR, OIL PUMP	1						-
6	E6300-35681	FLANGE NUT	1						M12*P1.25

----> Old replace New
<----> Interchangeable
* Please place an order assy(*)
<---- New replace Old
<-O-> Interchangeable with another part(s)
<-X-> Not interchangeable

https://tractormanualz.com/

EH2-G142001

OIL PAN GROUP

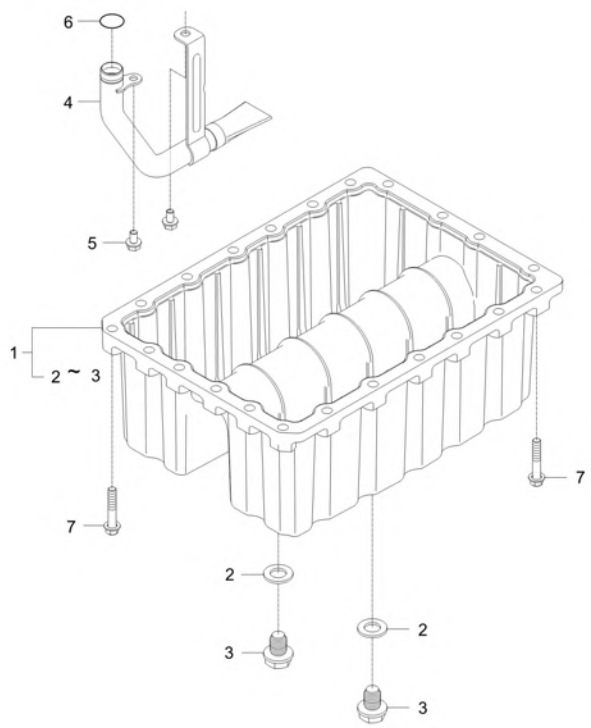

A : DK6010HSE

No.	Part Number	Description	Qty A	Qty B	Qty C	Qty D	Qty E	I.C	Remark
1	F5800-01601	ASSY FAN,OIL v	1						
1	F5800-01602	ASSY FAN,OIL v	1					<------	-
2	E6303-33661	GASKET	2						2.0t
3	E6303-33751	PLUG	2						-
3	E6303-33752	PLUG	2					<------	-
4	F5800-32111	OIL STRAINER ASSY	1						
5	01754-50610	BOLT, FLANGE	2						M6XP1.0
6	04811-00150	O RING v	1						
7	01654-50835	BOLT	22						M8x1.25

----> Old replace New
<---> Interchangeable
* Please place an order assy(*)
<---- New replace Old
<-O-> Interchangeable with another part(s)
<-X-> Not interchangeable

https://tractormanualz.com/

EH2-G143001

OIL GAUGE GROUP

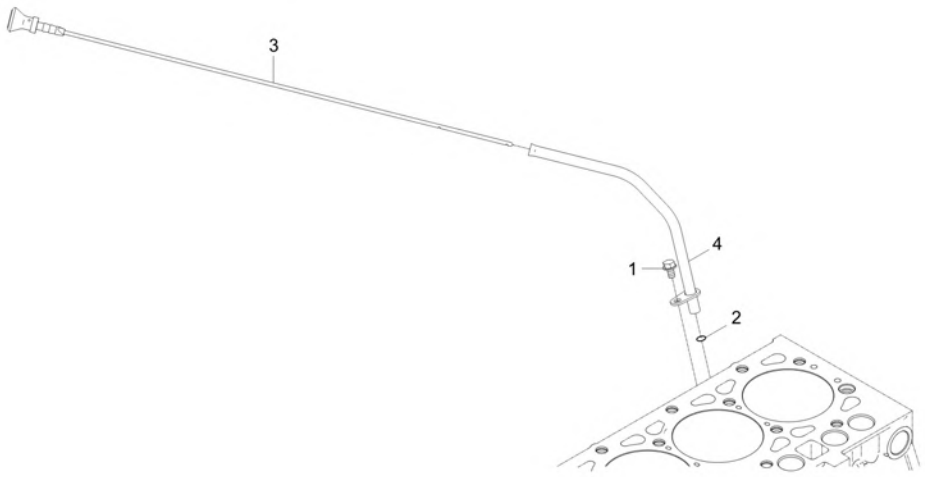

A : DK6010HSE

No.	Part Number	Description	Qty A	Qty B	Qty C	Qty D	Qty E	I.C	Remark
1	01754-50610	BOLT, FLANGE	1						M6XP1.0
2	04811-00100	O RING	1						
3	F5800-36413	GAUGE,OIL	1						-
3	F5800-36414	GAUGE,OIL	1					<----->	-
4	EF15-0044A	ASSYGUIDE,OILGAUGE	1						

----> Old replace New
<---- New replace Old
<-X-> Not interchangeable
<---> Interchangeable
<-O-> Interchangeable with another part(s)
* Please place an order assy(*)

https://tractormanualz.com/

EH2-G144001

OIL FILTER GROUP

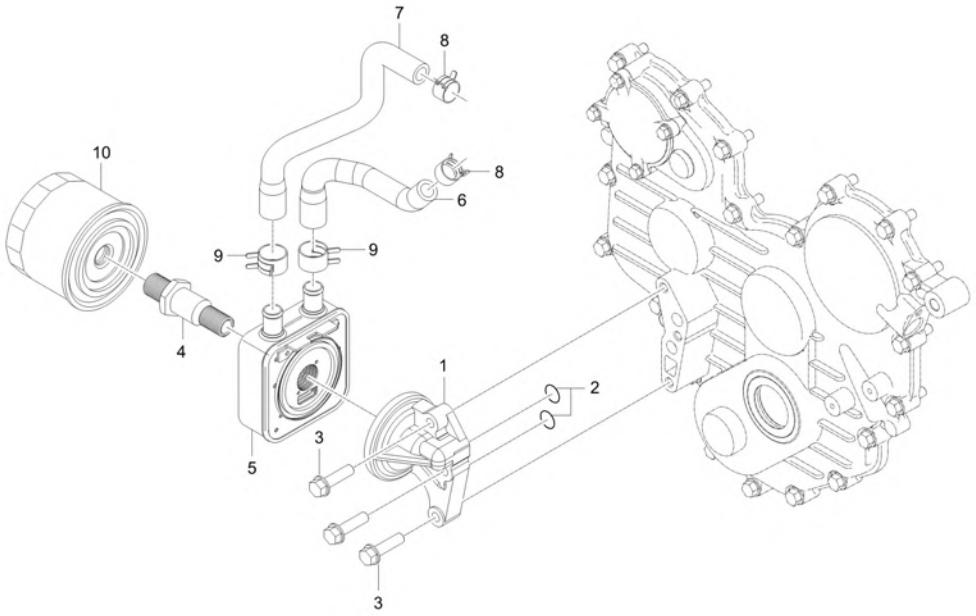

A : DK6010HSE

No.	Part Number	Description	Qty A	Qty B	Qty C	Qty D	Qty E	I.C	Remark
1	E5850-32617	SUPPORT,OIL FILTER	1						-
2	04816-00150	O_RING	2						DIA14.8
3	01754-50830	BOLT FLANGE	3						M8*P1.25
4	E6810-32292	TUBE, CONNECTING	1						N
5	E6820-32451	COOLER, OIL	1						-
6	F6800-16161	HOSE 1, OIL COOLER	1						
7	F6800-16172	HOSE 2, OIL COOLER	1						N
8	09318-88180	CLAMP, HOSE	2						
9	09318-88220	O-RING	2						
10	E6201-32443	OIL FILTER sp v	1						

----> Old replace New
<---- New replace Old
<-X-> Not interchangeable
<---> Interchangeable
<-O-> Interchangeable with another part(s)
* Please place an order assy(*)

https://tractormanualz.com/

EH2-G151001

FUEL EQUIPMENT GROUP

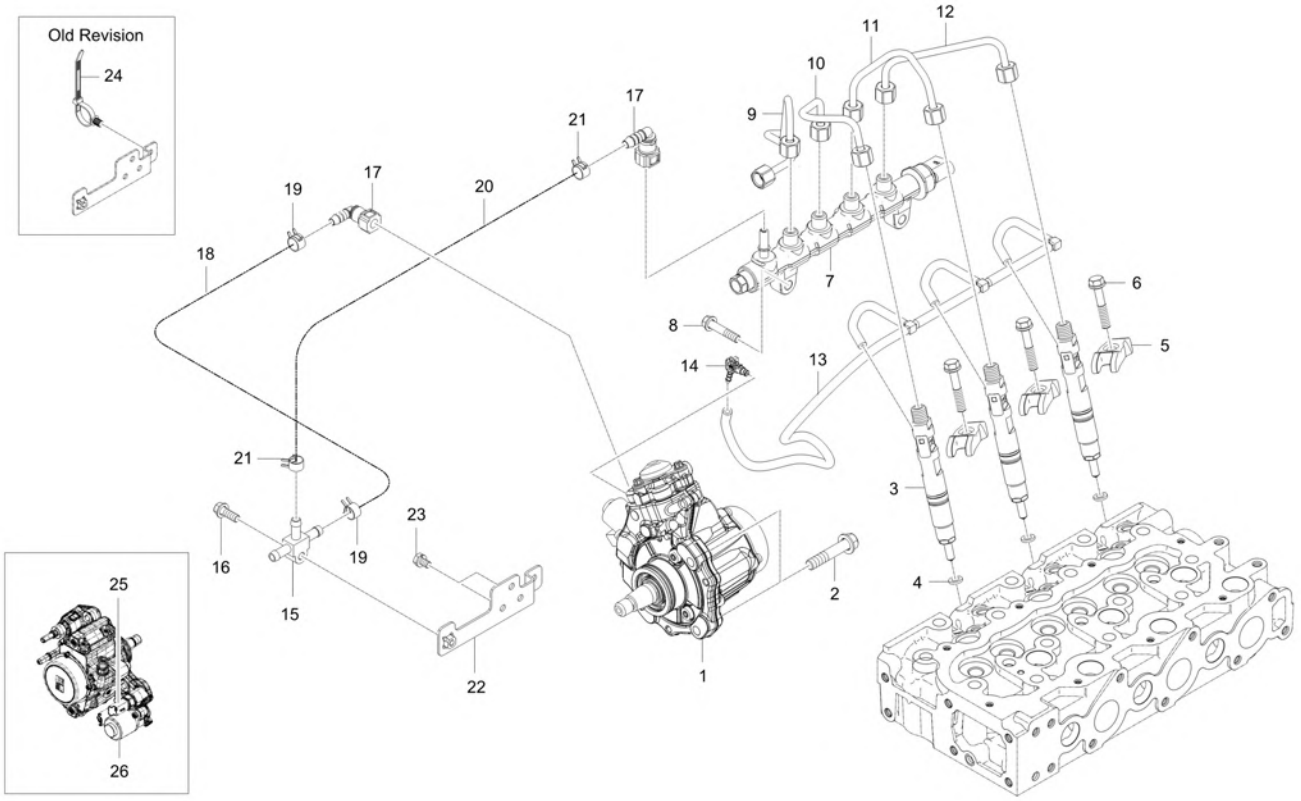

A : DK6010HSE

No.	Part Number	Description	Qty A	Qty B	Qty C	Qty D	Qty E	I.C	Remark
1	EH35-0001A	ASSY PUMP, HP FUEL	1						
2	01754-50835	BOLT v	3						M8XP1.25
3	EH15-0001A	ASSY INJECTOR	3						
3	EH15-0001B	ASSY INJECTOR	4 XGG700021 ~					<--O-->	
4	F6800-53181	SEAT, INJECTOR	3						t2.0
5	F6805-53453	CLAMP, INJECTOR	3						
6	F6800-53471	BOLT, INJECTOR CLMAP	3						
7	EH35-0002A	ASSY RAIL, FUEL	1						
8	01754-50830	BOLT FLANGE	2						M8XP1.25
9	EH35-0005A	PIPE, RAIL	1						
10	F6800-53722	PIPE 2, INJECTION	1						
11	F6800-53732	PIPE 3, INJECTION	1						
12	F6800-53742	PIPE 4, INJECTION	1						
13	EH25-0001A	ASSY TUBE, INJECTOR RETURN	1						
14	F6800-42511	CONNECTOR	1						
15	EH35-0015A	JOINT, FUEL HOSE dnr v	1						
15	EH35-0015B	JOINT, FUEL HOSE v	1					<------	
16	01754-50625	BOLT, FLANGE	1						M6XP1.0

----> Old replace New
<----> Interchangeable
* Please place an order assy(*)
<---- New replace Old
<-O-> Interchangeable with another part(s)
<-X-> Not interchangeable

https://tractormanualz.com/

EH2-G151001

FUEL EQUIPMENT GROUP

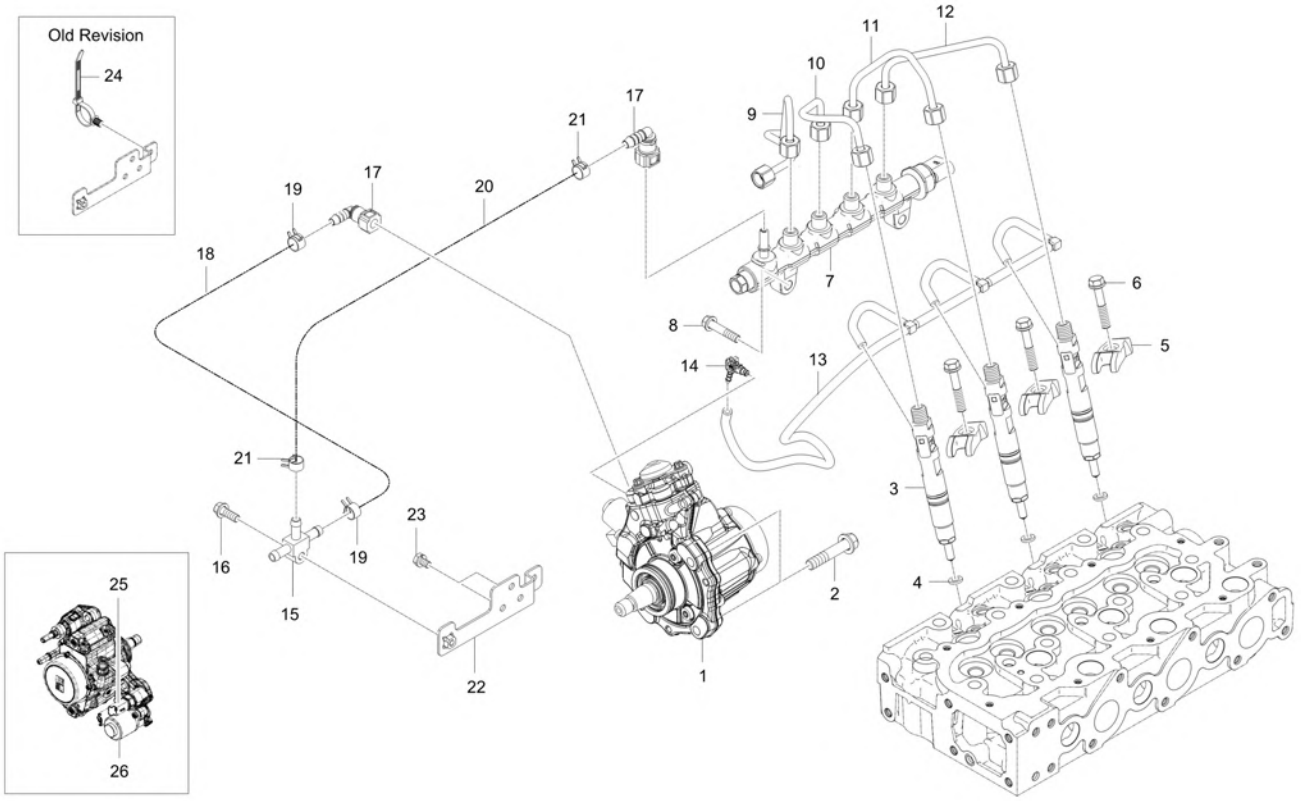

A : DK6010HSE

No.	Part Number	Description	Qty A	Qty B	Qty C	Qty D	Qty E	I.C	Remark
17	EH25-0006A	CONNECTOR, QUICK-128-783-002	2						
18	09661-80260	HOSE, FUEL	1						
19	09318-88130	CLAMP, HOSE	2						DIA13
20	09661-80150	HOSE, FUEL	1						
21	14911-4275-1	CLIP, TUBE	2						T0.8*#12
22	EH35-0018A	BRACKET FUEL HOSE	1						
23	01023-50610	BOLT, WASHER	2						M6XP1.0
24	T2198-82571	BAND CABLE	1						
25	F6800-12103002	FUEL TEMPERATURE SENSOR	1						-
26	EH15-0016A	IMV VALVE	1						

----> Old replace New
<---- New replace Old
<-X-> Not interchangeable
<---> Interchangeable
<-O-> Interchangeable with another part(s)
* Please place an order assy(*)

https://tractormanualz.com/

EH2-G161001

OIL JET GROUP

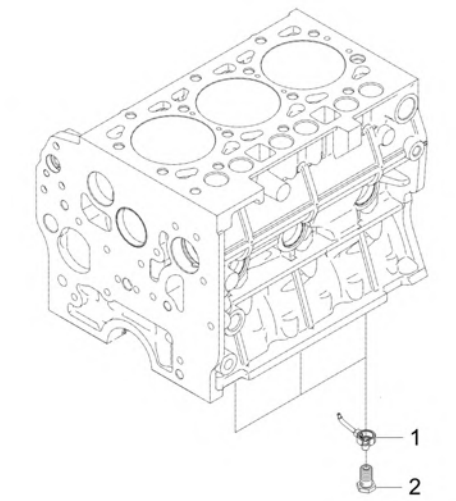

A : DK6010HSE

No.	Part Number	Description	Qty A	Qty B	Qty C	Qty D	Qty E	I.C	Remark
1	F6800-01311	BODY, PISTON COOLING JET	3						
2	F6800-01321	VALVE, PISTON COOLING JET	3						

----> Old replace New
<----> Interchangeable
* Please place an order assy(*)
<---- New replace Old
<-O-> Interchangeable with another part(s)
<-X-> Not interchangeable

https://tractormanualz.com/

EH2-G162003

WATER FLANGE GROUP

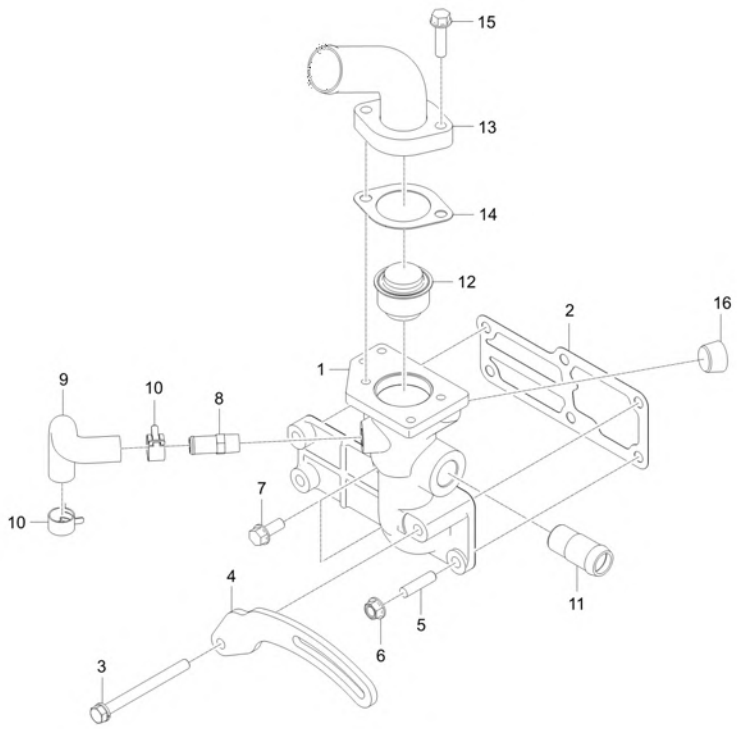

A : DK6010HSE

No.	Part Number	Description	Qty A	Qty B	Qty C	Qty D	Qty E	I.C	Remark
1	F5830-72914	PLANGE, WATER dnr v	1						N
2	F6800-72921	GASKET COOLING WATER FLANGE	1						
3	01123-50870	WASHER BOLT	1						
4	F6800-64421	SUPPORT, ALTERNATOR dnr v	1						
5	01513-50822	STUD	1						M8*1.25
6	02763-50080	FLANGE NUT	1						M8XP1.25
7	01754-50820	BOLT, FLANGE	2						M8XP1.25
8	E5500-73342	HOSE, WATER RETURN v	1						
8	E5500-73343	PIPE, WATER RETURN	1					<------	
9	E6850-73342	HOSE, WATER PUMP v	1						
10	09318-88180	CLAMP, HOSE	2						
11	F6800-13311	CONNECTOR, COOLANT	1						DIA22.3
12	E5500-73013	THERMOSTAT ASSEMBLY	1						
13	EF26-0001A	COVER,THERMOSTAT	1						
14	E5500-73272	GASKET v	1						t1.0
15	01754-50825	BOLT, FLANGE	2						M8XP1.25
16	F6860-96041	PLUG	1						PT1/2
16	F6860-96042	PLUG	1					<----->	PT1/2

----> Old replace New <---- New replace Old <-X-> Not interchangeable
<---> Interchangeable <-O-> Interchangeable with another part(s)
* Please place an order assy(*)

https://tractormanualz.com/

EH2-G163001

WATER PUMP GROUP

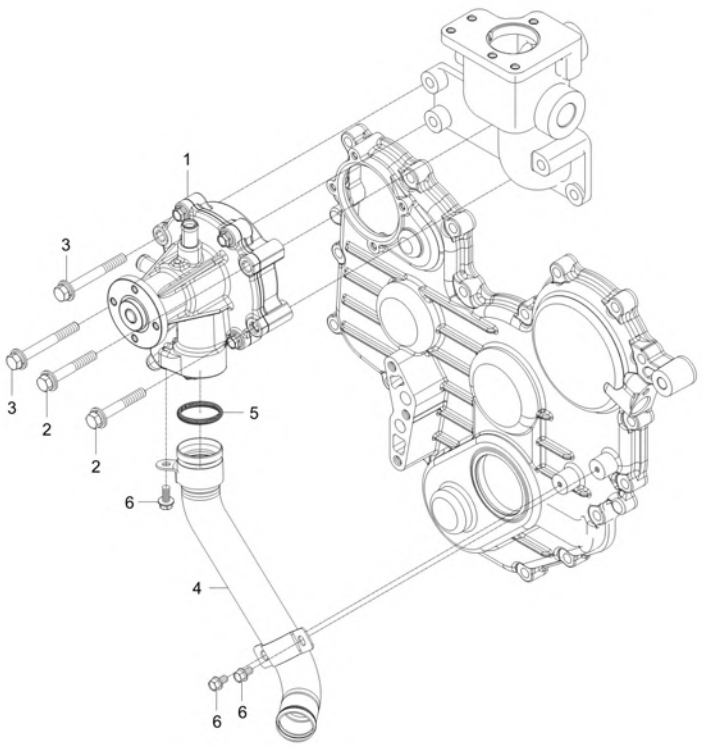

A : DK6010HSE

No.	Part Number	Description	Qty A	Qty B	Qty C	Qty D	Qty E	I.C	Remark
1	F6800-73031	ASSY PUMP,WATER sp v	1						
2	01125-50850	BOLT, WASHER	2						M8*P1.25
3	01125-50870	BOLT, WASHER	2						
4	F6800-73051	WATER PUMP PIPE ASSY	1						
5	04811-00320	O RING v	1						(P32)
6	01754-50610	BOLT, FLANGE	3						M6XP1.0

----> Old replace New
<---- New replace Old
<-X-> Not interchangeable
<---> Interchangeable
<-O-> Interchangeable with another part(s)
* Please place an order assy(*)

https://tractormanualz.com/

EH2-G171001

EGR GROUP

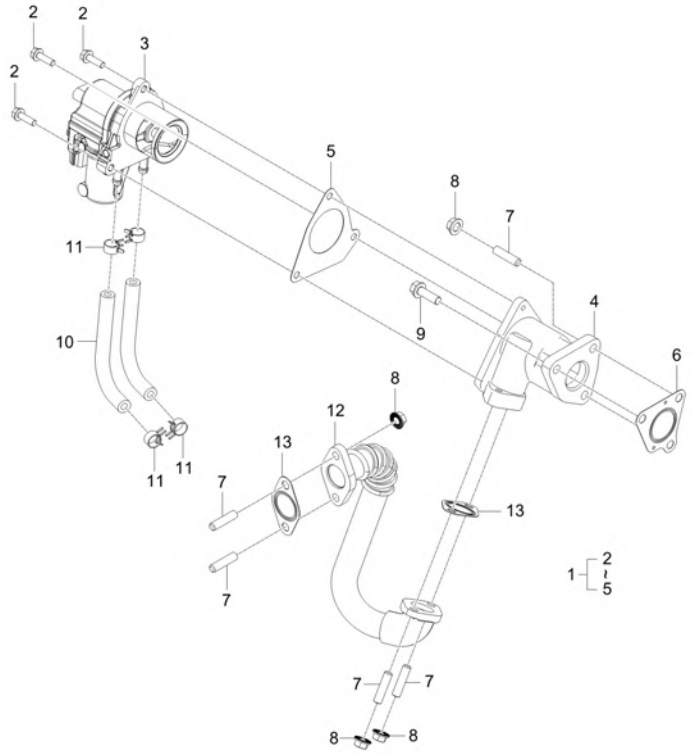

A : DK6010HSE

No.	Part Number	Description	Qty A	Qty B	Qty C	Qty D	Qty E	I.C	Remark
1	F5800-17502	EGR VALVE AND HOUSING ASSY	1						
1	F5800-17503	EGR VALVE AND HOUSING ASSY	1					<----->	
2	01754-50620	BOLT, FLANGE	3						
3	F5800-17512	EGR VALVE ASSY	1						
4	F5800-17521	EGR HOUSING HOUSING	1						N
4	F5800-17522	EGR HOUSING HOUSING	1					<----->	-
5	F5800-17531	GASKET	1						
6	F6800-17551	GASKET, EGR HOUSING	1						
7	01513-50822	STUD	5						M8*1.25
8	02763-50080	FLANGE NUT	5						M8XP1.25
9	01754-50825	BOLT, FLANGE	2						M8XP1.25
10	F5830-17562	COOLING HOSE	2						
11	09318-88130	CLAMP, HOSE	4						
12	F5830-17801	EGR PIPE ASSY	1						N
13	F6800-20301	GASKET, EGR	2						

----> Old replace New
<---- New replace Old
<-X-> Not interchangeable
<---> Interchangeable
<-O-> Interchangeable with another part(s)
* Please place an order assy(*)

https://tractormanualz.com/

EH2-G172001

EGR COOLER GROUP

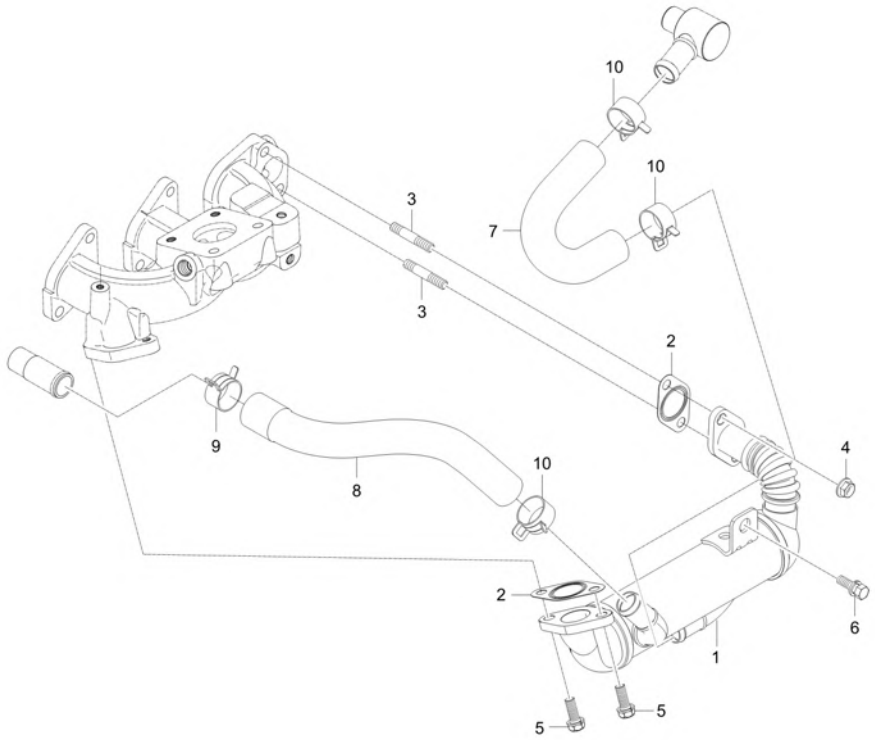

A : DK6010HSE

No.	Part Number	Description	Qty A	Qty B	Qty C	Qty D	Qty E	I.C	Remark
1	F5800-20101	EGR COOLER ASSY	1						
2	F6800-20301	GASKET, EGR	2						
3	01513-50835	STUD	2						
4	F6800-91911	U-NUT	2						-
5	01123-50822	WASHER BOLT	2						M8XP1.25
6	01123-50816	Hex Head Cap Screw	1						M8XP1.25
7	F6800-20401	HOSE 1, EGR COOLER	1						
8	F6800-20501	HOSE 2, EGR COOLER	1						
9	09318-88260	HOSE CLAMP	1						
10	09318-88250	CLAMP	3						

----> Old replace New <---- New replace Old <-X-> Not interchangeable
<---> Interchangeable <-O-> Interchangeable with another part(s)
* Please place an order assy(*)

https://tractormanualz.com/

EH2-G191001

GLOW PLUG GROUP

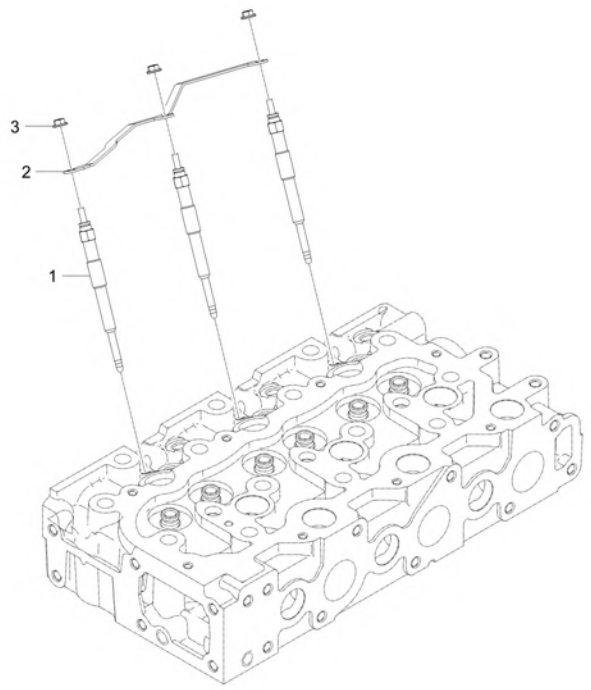

A : DK6010HSE

No.	Part Number	Description	Qty A	Qty B	Qty C	Qty D	Qty E	I.C	Remark
1	F6800-65511	PLUG,GLOW	3						N
2	EH29-0001A	GLOW PLUG CORD	1						
3	02761-50040	NUT, FLANGE	3						

----> Old replace New
<---- New replace Old
<-X-> Not interchangeable
<---> Interchangeable
<-O-> Interchangeable with another part(s)
* Please place an order assy(*)

https://tractormanualz.com/

TD2-G118001

MANUFACTURING LABEL GROUP

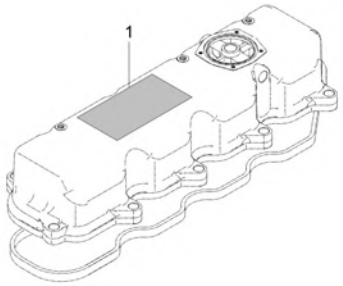

A : DK6010HSE

No.	Part Number	Description	Qty A	Qty B	Qty C	Qty D	Qty E	I.C	Remark
1	EH28-0005A	LABEL, EPA CERTIFICATE	1 VGG700017 ~ VGG700028						
1	EH28-0005B	LABEL, EPA CERTIFICATE	1 WGG700001 ~ WGG700024					<------	
1	EH28-0005C	LABEL, EPA CERTIFICATE	1					<------	

----> Old replace New
<---> Interchangeable
* Please place an order assy(*)
<---- New replace Old
<-O-> Interchangeable with another part(s)
<-X-> Not interchangeable

https://tractormanualz.com/

TD2-G113001

INTAKE PIPE GROUP

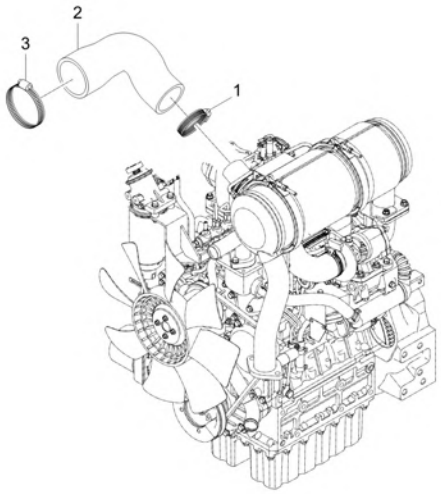

A : DK6010HSE

No.	Part Number	Description	Qty A	Qty B	Qty C	Qty D	Qty E	I.C	Remark
1	E7300-72891	CLAMP, HOSE	1						DIA60스탠 60#
2	F5830-18951	HOSE 2, INTAKE	1						
3	E7300-11791	CLAMP, HOSE	1						DIA85스탠 85#

----> Old replace New
<---> Interchangeable
* Please place an order assy(*)
<---- New replace Old
<-O-> Interchangeable with another part(s)
<-X-> Not interchangeable

https://tractormanualz.com/

TD2-G112001

COOLING FAN GROUP

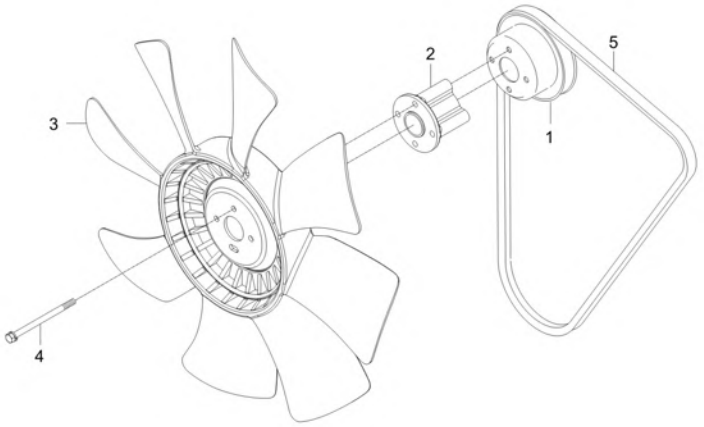

A : DK6010HSE

No.	Part Number	Description	Qty A	Qty B	Qty C	Qty D	Qty E	I.C	Remark
1	E5616-74252ED	PULLEY, FAN	1						
2	E5850-74151	COLLAR,FAN	1						
3	E6520-74111	FAN, COOLING v	1						
4	01023-50680	BOLT v	4						
5	F6820-72531	FAN BELT	1						REC A. 43

----> Old replace New
<---- New replace Old
<-X-> Not interchangeable
<---> Interchangeable
<-O-> Interchangeable with another part(s)
* Please place an order assy(*)

https://tractormanualz.com/

TD2-G115001

AFTERTREATMENT GROUP

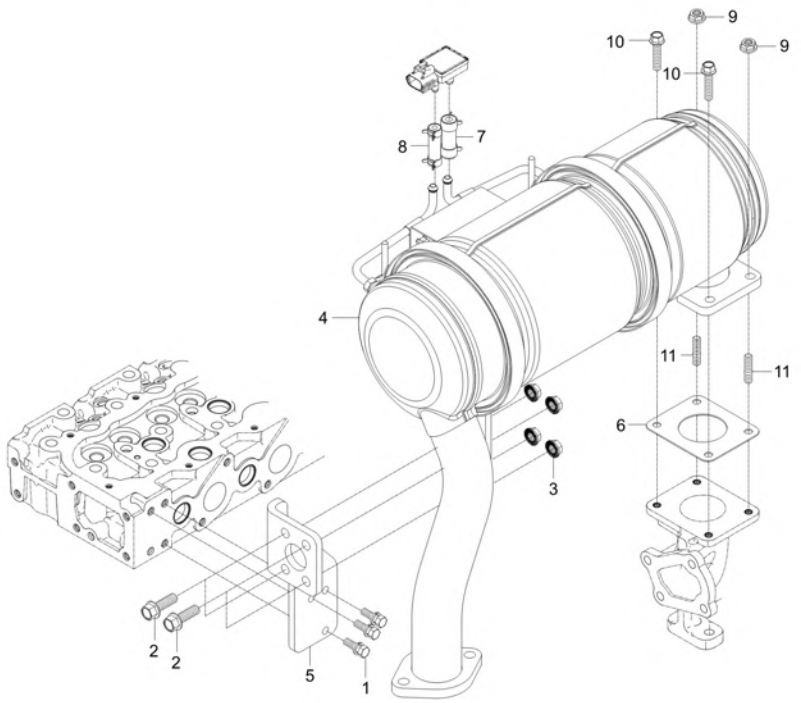

A : DK6010HSE

No.	Part Number	Description	Qty A	Qty B	Qty C	Qty D	Qty E	I.C	Remark
1	01123-50822	WASHER BOLT	3						M8XP1.25
2	01133-51032	BOLT	4						M10*P1.25
3	02783-50100	FLANGE NUT	4						M10XP1.25
4	F5830-25101	CCRT ASSY	1						N
5	F5830-25423	BRACKET	1						T=8.0
6	F6800-12371	GASKET, TURBOCHARGER FLANGE	1						
7	F6800-26661	TUBE, 1	1						
8	F6800-26671	TUBE, 2	1						
9	F6800-91911	U-NUT	2						-
10	F6800-92411	FLANGEBOLT	2						M8x1.25 25mm
11	F6800-92441	BOLT, STUD	2						

----> Old replace New
<---- New replace Old
<-X-> Not interchangeable
<---> Interchangeable
<-O-> Interchangeable with another part(s)
* Please place an order assy(*)

https://tractormanualz.com/

TD2-G117001

FUEL FILTER GROUP

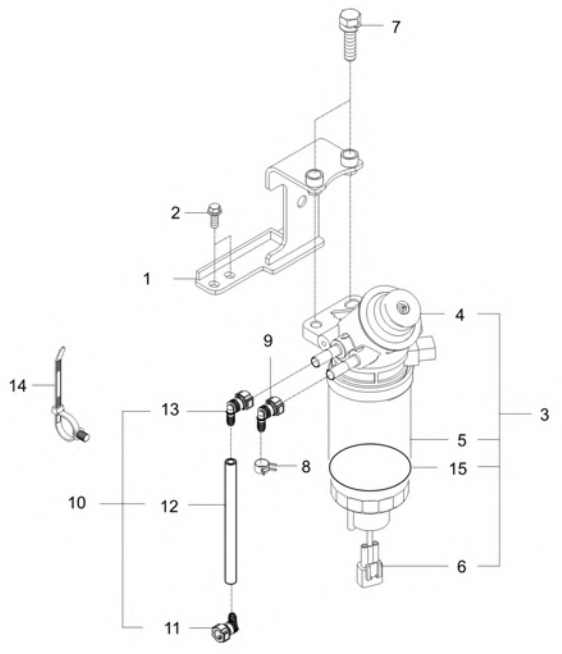

A : DK6010HSE

No.	Part Number	Description	Qty A	Qty B	Qty C	Qty D	Qty E	I.C	Remark
1	EH25-0002A	SUPPORT, FUEL FILTER	1						
2	01123-50816	Hex Head Cap Screw	2						M8XP1.25
3	EH35-0006A	ASSY, MAIN FUEL FILTER	1						
4	EH35-0007A	ASSY HEAD	1						
5	EH35-0011A	FUEL FILTER	1						
6	F6800-16121	SENSOR, FUEL WATER	1						
7	01754-50845	BOLT, FLANGE	2						
8	09318-88140	CLMAP, HOSE	1						
9	EH25-0006A	CONNECTOR, QUICK-128-783-002	1						
10	EH25-0009A	ASSY HOSE, FUEL	1						
11	EH25-0007A	CONNECTOR, QUICK-226-308-000	1						
12	EH25-0010A	HOSE, FUEL	1						
13	EH25-0006A	CONNECTOR, QUICK-128-783-002	1						
14	T2198-82571	BAND CABLE	1						
15	EH35-0012A	O RING	1						

----> Old replace New
<----> Interchangeable
* Please place an order assy(*)
<---- New replace Old
<-O-> Interchangeable with another part(s)
<-X-> Not interchangeable

https://tractormanualz.com/

TD2-G119001

ECU GROUP

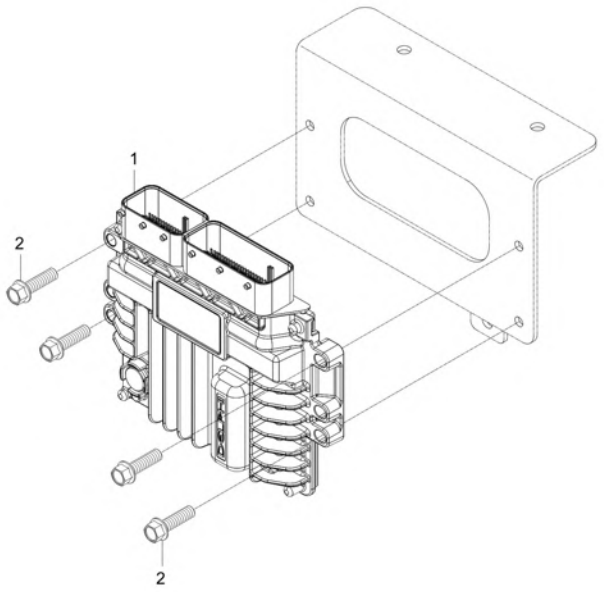

A : DK6010HSE

No.	Part Number	Description	Qty A	Qty B	Qty C	Qty D	Qty E	I.C	Remark
1	F6800-26102	333...ENG ECU T4 -Need Program v	1						
1	EH39-0001A	050 - CONTROLLER, ENGINE dnr v	1					<----->	
2	01754-50625	BOLT, FLANGE	6						7T

----> Old replace New
<---- New replace Old
<-X-> Not interchangeable
<---> Interchangeable
<-O-> Interchangeable with another part(s)
* Please place an order assy(*)

https://tractormanualz.com/

TD2-G211003

CLUTCH GROUP

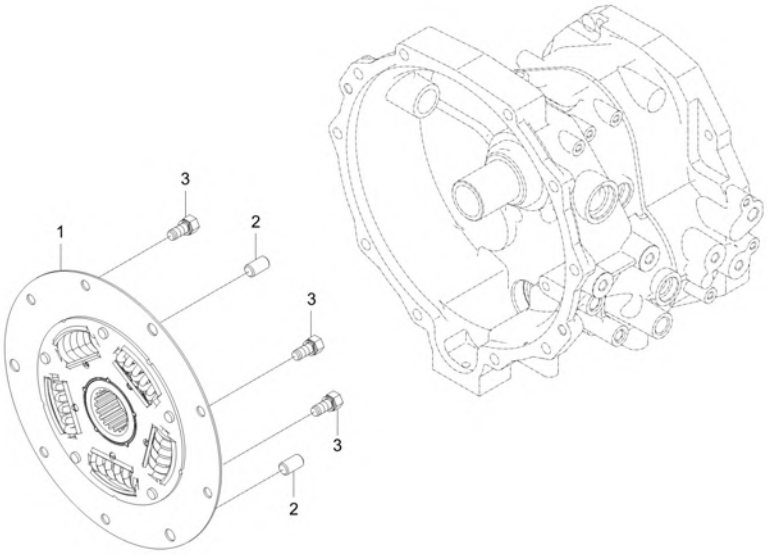

A : DK6010HSE

No.	Part Number	Description	Qty A	Qty B	Qty C	Qty D	Qty E	I.C	Remark
1	TD22-0090B	ASSY DAMPER v	1 UGG700001 ~ VGG700016						
1	TD22-0119A	ASSY DAMPER	1 VGG700017 ~ WGG700024					<------	
2	05012-01016	PIN, DOWEL	3						
3	01123-50816	Hex Head Cap Screw	6						M8XP1.25

----> Old replace New
<---> Interchangeable
* Please place an order assy(*)
<---- New replace Old
<-O-> Interchangeable with another part(s)
<-X-> Not interchangeable

https://tractormanualz.com/

TD2-G221002

FRONT COVER GORUP

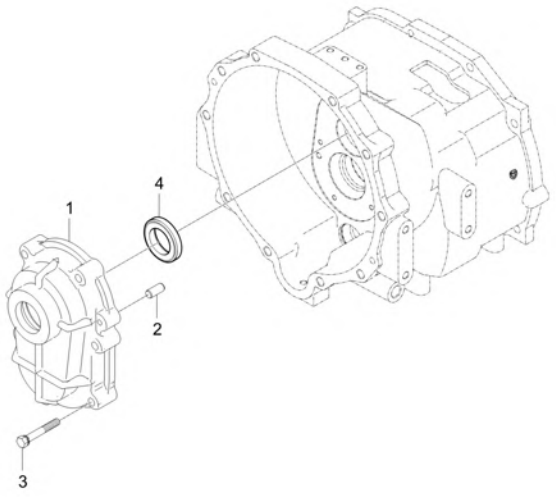

A : DK6010HSE

No.	Part Number	Description	Qty A	Qty B	Qty C	Qty D	Qty E	I.C	Remark
1	T5515-14751	CASE PROPELLAR SHAFT	1						
2	05012-00818	PIN, PARALLEL	2						
3	01123-50840	BOLT	6						M8*P1.25-40
4	09500-35528	SEAL,OIL	1						TC35*52*8

----> Old replace New
<---> Interchangeable
* Please place an order assy(*)
<---- New replace Old
<-O-> Interchangeable with another part(s)
<-X-> Not interchangeable

https://tractormanualz.com/

TD2-G222003

CLUTCH HOUSING GROUP

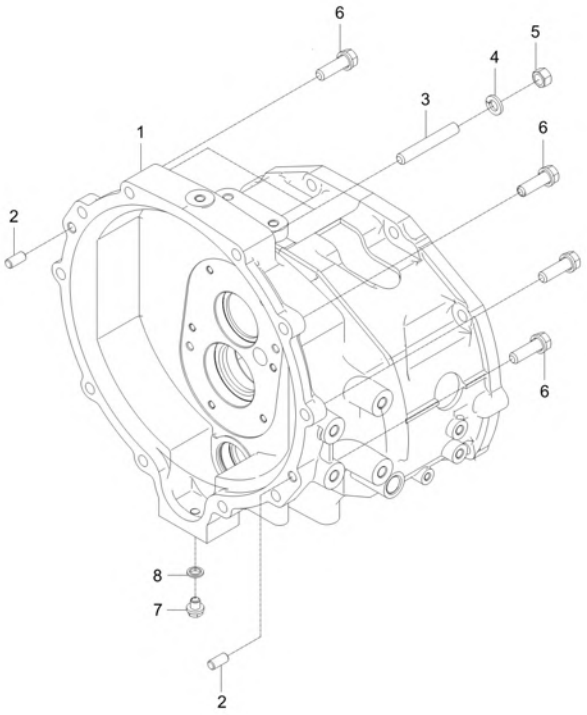

A : DK6010HSE

No.	Part Number	Description	Qty A	Qty B	Qty C	Qty D	Qty E	I.C	Remark
1	TD22-0059C	HOUSING,CLUTCH	1						
2	05012-01020	PIN, STRAIGHT	2						
3	01574-51265	STUD	2						M12*1.25*65
4	04512-50120	SPRING WASHER	2						M12
5	02176-50120	NUT	2						M12XP1.25
6	01177-51240	BOLT v	8						M12XP1.25 (9T/스프
7	06331-45010	PLUG v	1						M10*1.25
8	04717-01000	WASHER, SEAL	1						M10

----> Old replace New
<---- New replace Old
<-X-> Not interchangeable
<---> Interchangeable
<-O-> Interchangeable with another part(s)
* Please place an order assy(*)

https://tractormanualz.com/

TD2-G223003

MID CASE GROUP

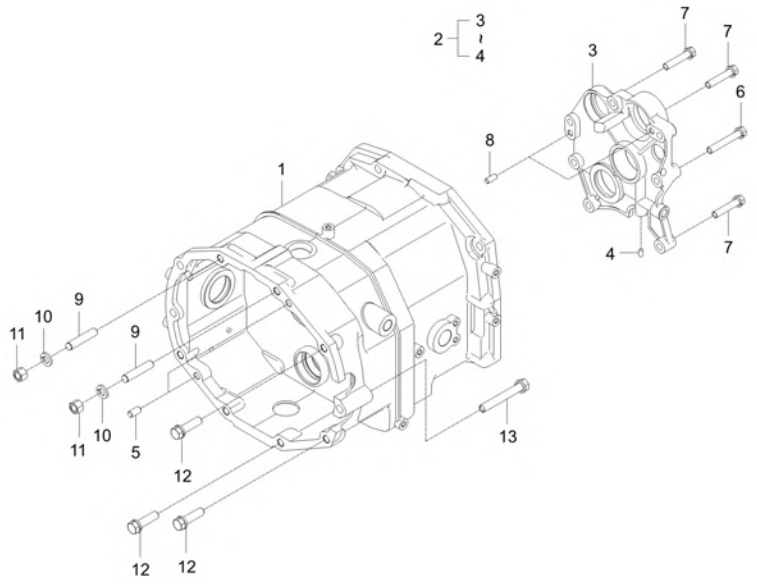

A : DK6010HSE

No.	Part Number	Description	Qty A	Qty B	Qty C	Qty D	Qty E	I.C	Remark
1	TD22-0060C	CASE,MIDDLE	1						
2	TD22-0027B	COVER,BEARINGMCv	1						
3	TD22-0035B	COVER,BEARING v	1						
4	06350-00607	PLUG v	1						
5	05012-00818	PIN, PARALLEL	2						
6	01133-51065	BOLT	1						
7	01133-51050	BOLT	6						
8	05012-01018	PIN, STRAIGHT	2						
9	T4620-21481	STUD	2						
10	04512-50120	SPRING WASHER	2						M12
11	T4240-14081	NUT	2						
12	01133-51245	BOLT	7						
13	01133-51285	BOLT, WASHER	1						

----> Old replace New
<---- New replace Old
<-X-> Not interchangeable
<---> Interchangeable
<-O-> Interchangeable with another part(s)
* Please place an order assy(*)

https://tractormanualz.com/

TD2-G224003

TRANSMISSION CASE GROUP

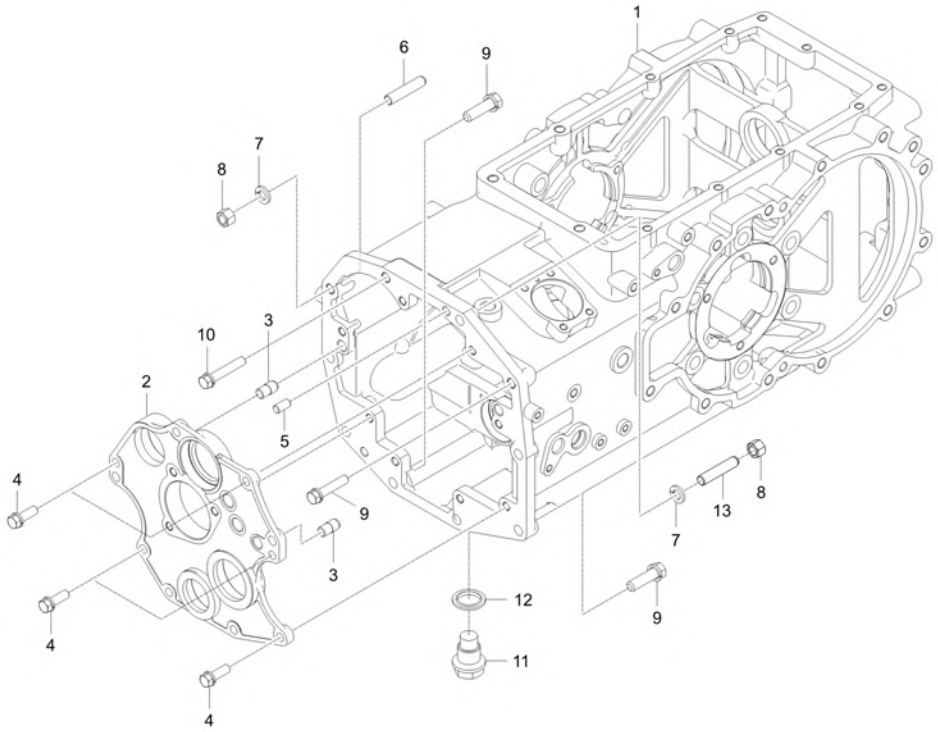

A : DK6010HSE

No.	Part Number	Description	Qty A	Qty B	Qty C	Qty D	Qty E	I.C	Remark
1	TD22-0058D	CASE, T/M	1						
2	TD22-0053A	COVER, BEARING	1						
2	TD22-0053B	COVER, BEARING	2					<------	
3	37305-2817-1	STRAIGHT PIN	2						
4	01133-51030	WITH WASHER BOLT	8						M10XP1.25
5	05012-01018	PIN, STRAIGHT	2						
6	T4620-21481	STUD	2						
7	04512-50120	SPRING WASHER	2						M12
8	T4240-14081	NUT	2						
9	01133-51245	BOLT	7						
10	01133-51260	BOLT	1						M12*1.25
11	06311-55060	PLUG v	1						
12	04717-02650	WASHER, SEAL	1						
13	01574-51235	STUD	1						M12*1.25*30

----> Old replace New
<---- New replace Old
<-X-> Not interchangeable
<---> Interchangeable
<-O-> Interchangeable with another part(s)
* Please place an order assy(*)

https://tractormanualz.com/

TD2-G232003

DRIVE SHAFT GROUP

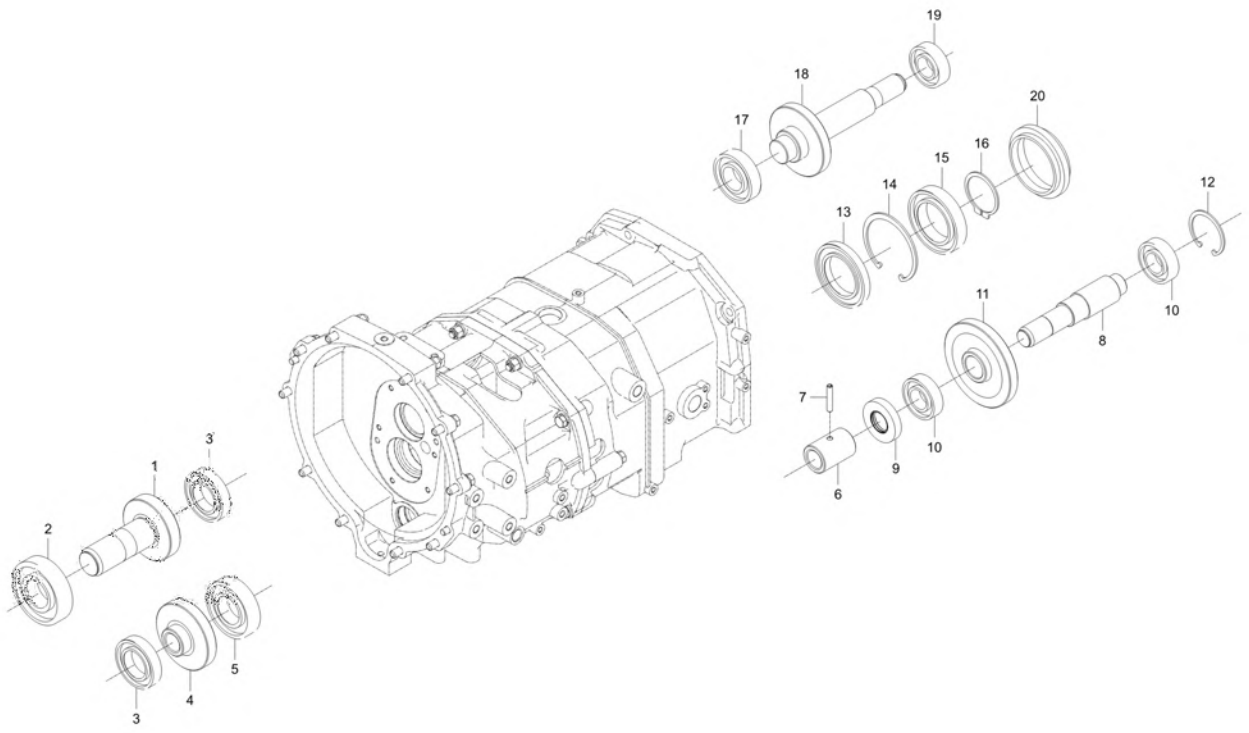

A : DK6010HSE

No.	Part Number	Description	Qty A	Qty B	Qty C	Qty D	Qty E	I.C	Remark
1	TD22-0050B	SHAFT, GEAR 22	1						
2	08101-06307	BEARING, BALL	1						#6307
3	T2555-06007	BALL BEARING	2						#6007, GMB CHINA
4	TD22-0052B	GEAR 25	1						
5	T2555-06207	BALLBEARING	1						#6207, GMB CHINA
6	37805-4452-1	COUPLING	1						
7	05411-00635	PIN, SPRING	1						DIA5*36
8	TD22-0039A	SHAFT, COUNTER nfs dnr v	1						
9	09502-55210	SEAL OIL v	1						DIA25
10	T2555-06205	BALL BEARING	2						#6205, GMB CHINA
11	TD22-0038B	GEAR 33	1						
12	04611-00520	SNAP RING	1						
13	08101-16010	BEARING, BALL	1						
14	04611-00800	RING, SNAP	1						
15	08101-06010	BEARING,BALL	1						#6010
16	04612-00500	SNAP RING	1						
17	T2555-06206	BALL BEARING	1						#6206, GMB CHINA
18	TD22-0042B	SHAFT, GEAR 27	1						

----> Old replace New
<----> Interchangeable
* Please place an order assy(*)
<---- New replace Old
<-O-> Interchangeable with another part(s)
<-X-> Not interchangeable

https://tractormanualz.com/

TD2-G232003

DRIVE SHAFT GROUP

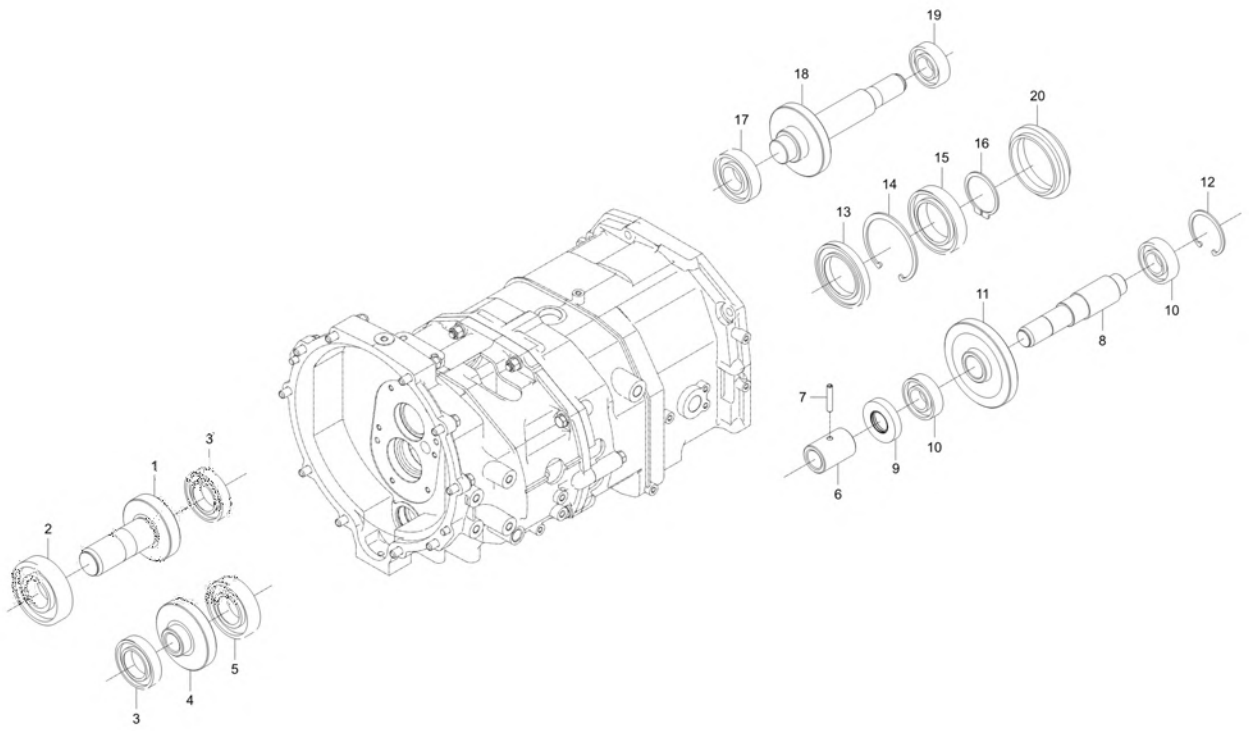

A : DK6010HSE

No.	Part Number	Description	Qty A	Qty B	Qty C	Qty D	Qty E	I.C	Remark
19	T2555-06205	BALL BEARING	1						#6205, GMB CHINA
20	TD22-0041B	GEAR 35	1						

----> Old replace New
<----> Interchangeable
* Please place an order assy(*)
<---- New replace Old
<-O-> Interchangeable with another part(s)
<-X-> Not interchangeable

https://tractormanualz.com/

TD2-G271003

RANGE SHIFT SHAFT GROUP

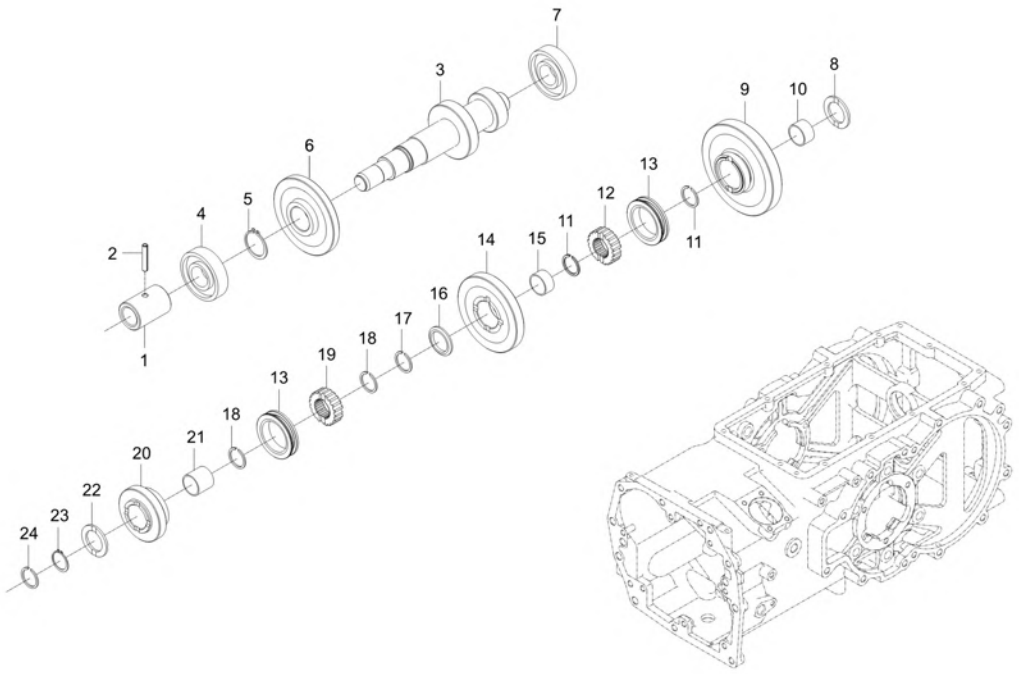

A : DK6010HSE

No.	Part Number	Description	Qty A	Qty B	Qty C	Qty D	Qty E	I.C	Remark
1	37805-4452-1	COUPLING	1						
2	05411-00635	PIN, SPRING	1						DIA5*36
3	TD22-0022B	SHAFT, GEAR 23-15	1						
4	T2555-06205	BALL BEARING	1						#6205, GMB CHINA
5	04612-00350	CIR CLIP, EXTERNAL	1						
6	TD22-0023B	GEAR 34	1						
7	08101-06305	BEARING,BALL v	1						DIA25
8	T4810-24541	COLLAR, THRUST	1						
9	TD22-0024B	GEAR 40	1						
10	08823-54027	BEARING,NEEDLE v	1						NTN,K35402 7
11	T4810-25771	CIR CLIP, EXTERNAL	2						
12	T2610-25241	BOSS, SPLINE	1						
13	38430-2175-1	SHIFT	2						
14	TD22-0025B	GEAR 34	1						
15	08823-23717	BEARING,NEEDLE	1						
16	T2610-23621	COLLAR,THRUST	1						
17	T2610-22821	RING,SNAP	1						
18	38430-2554-1	RING, SNAP	2						

----> Old replace New <---- New replace Old <-X-> Not interchangeable
<---> Interchangeable <-O-> Interchangeable with another part(s)
* Please place an order assy(*)

https://tractormanualz.com/

TD2-G271003

RANGE SHIFT SHAFT GROUP

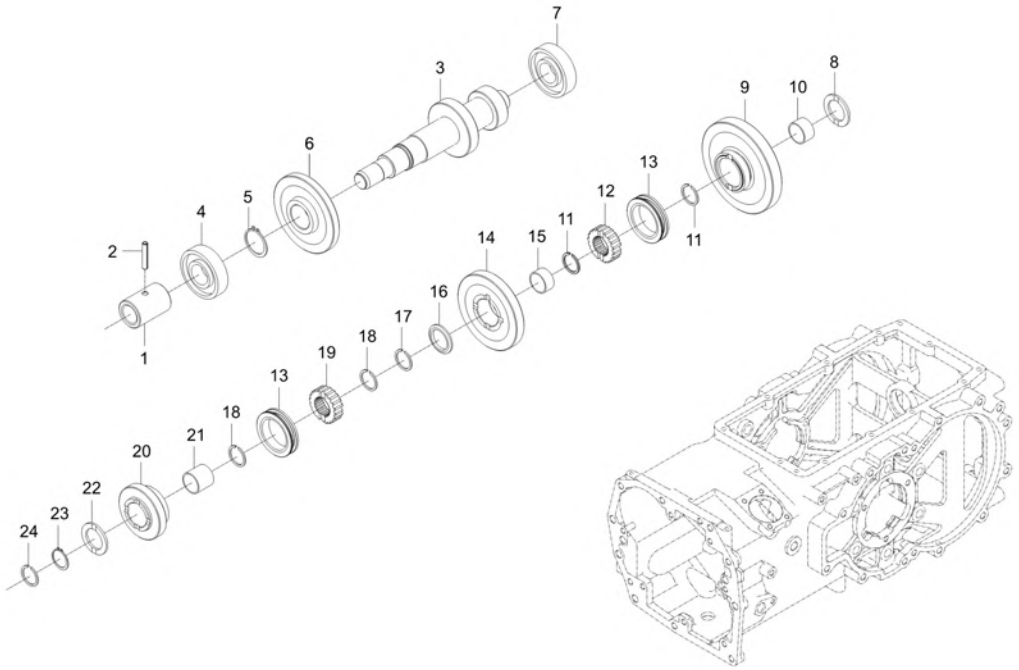

A : DK6010HSE

No.	Part Number	Description	Qty A	Qty B	Qty C	Qty D	Qty E	I.C	Remark
19	T5715-23371	BOSS,SPLINE	1						
20	TD22-0026B	GEAR 22	1						
21	08822-83327	BEARING,NEEDLE v	1						
22	T2610-23681	COLLAR,THRUST	1						
23	04612-00280	SNAP RING	1						
24	T2610-14541	CIR-CLIP	1						T1.5 28

----> Old replace New
<---- New replace Old
<-X-> Not interchangeable
<---> Interchangeable
<-O-> Interchangeable with another part(s)
* Please place an order assy(*)

https://tractormanualz.com/

TD2-G272003

RANGE SHIFT FORK GROUP

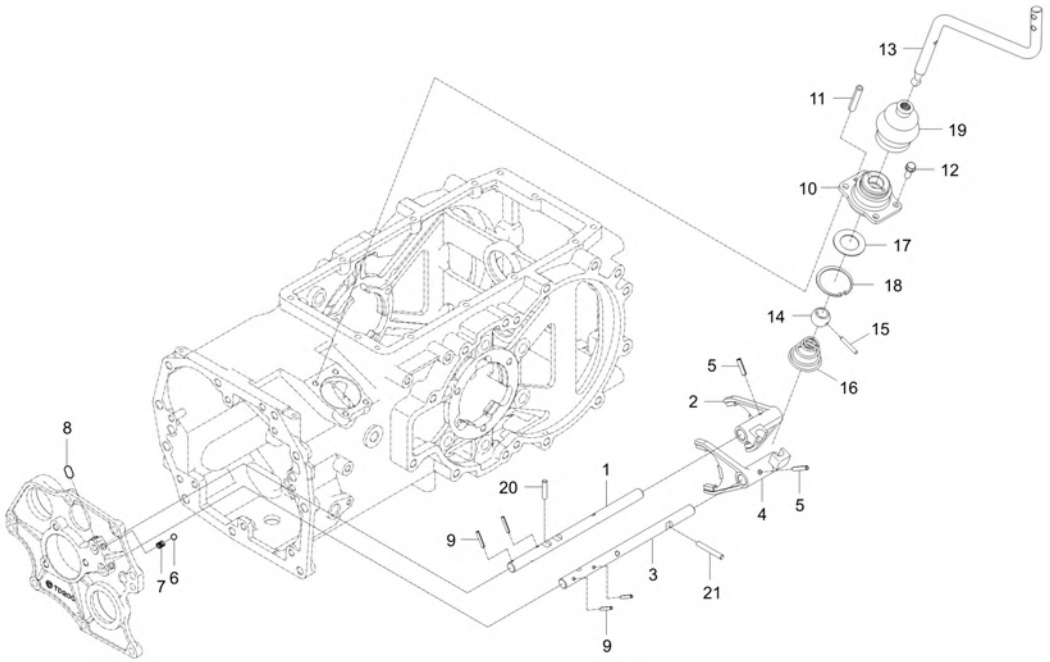

A : DK6010HSE

No.	Part Number	Description	Qty A	Qty B	Qty C	Qty D	Qty E	I.C	Remark
1	TD22-0049B	ROD,FORKL,M	1						
2	T5710-23112	FORK	1						
3	TD22-0048B	ROD,FORKH	1						
4	TD22-0047A	FORK,SHIFT(H)	1						
5	05411-00625	PIN, SPRING v	2						DIA6.4XL25
6	07715-01605	BALL,STEEL	2						5/16"
7	62331-1853-2	SPRING	2						DIA1.4
8	T4810-21283	PIN	1						
9	05411-00425	PIN, SPRING	4						
10	T5715-23152	COVER, RANGE SHIFT	1						
11	05411-00412	OB PIN,SPRING	1						
12	01123-50820	BOLT, WASHER v	4						M8XP1.25
13	T5715-23163	LEVER,RANGE	1						
14	T5715-21331	BALL	1						
15	T5715-21342	PIN dnr v	1						
16	T5715-21361	SPRING,CONE	1						
17	T5715-21371	WASHER	1						
17	T5715-21372	Washer, Plain	1					<------	

----> Old replace New
<---> Interchangeable
* Please place an order assy(*)
<---- New replace Old
<-O-> Interchangeable with another part(s)
<-X-> Not interchangeable

https://tractormanualz.com/

TD2-G272003

RANGE SHIFT FORK GROUP

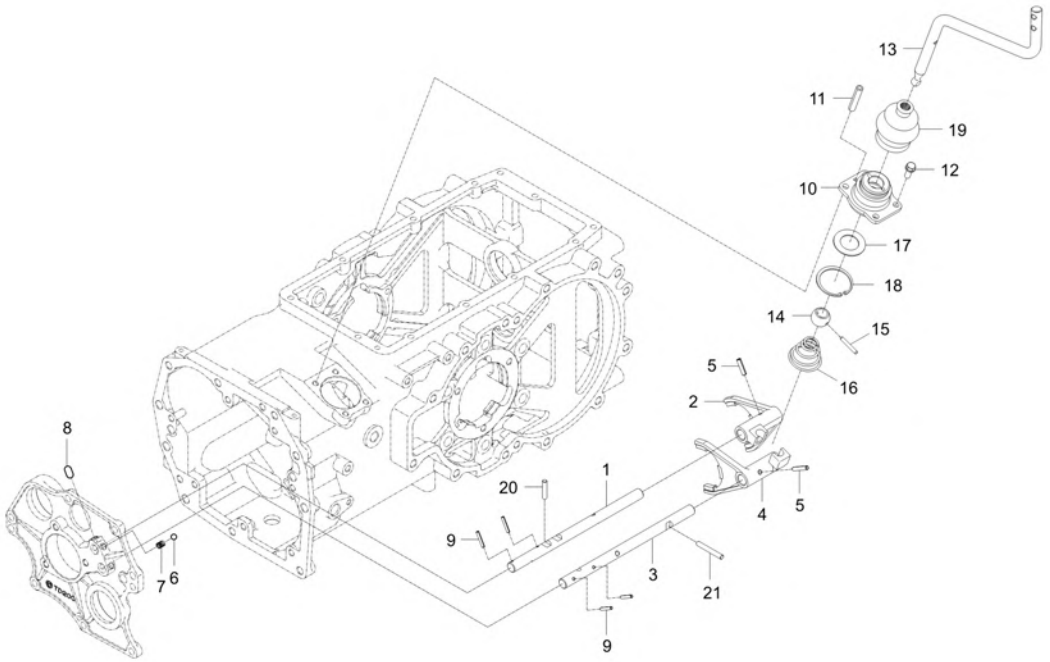

A : DK6010HSE

No.	Part Number	Description	Qty A	Qty B	Qty C	Qty D	Qty E	I.C	Remark
18	04611-00520	SNAP RING	1						
19	T5715-21382	JABARA dnr v	1						
19	T5715-21383	JABARA v	1					<------	
20	TD22-0105A	PIN-(L,M)	1						
21	TD22-0106A	PIN-(H)	1						

----> Old replace New
<---> Interchangeable
* Please place an order assy(*)
<---- New replace Old
<-O-> Interchangeable with another part(s)
<-X-> Not interchangeable

https://tractormanualz.com/

TD2-G281003

SPIRAL BEVEL PINION SHAFT GROUP

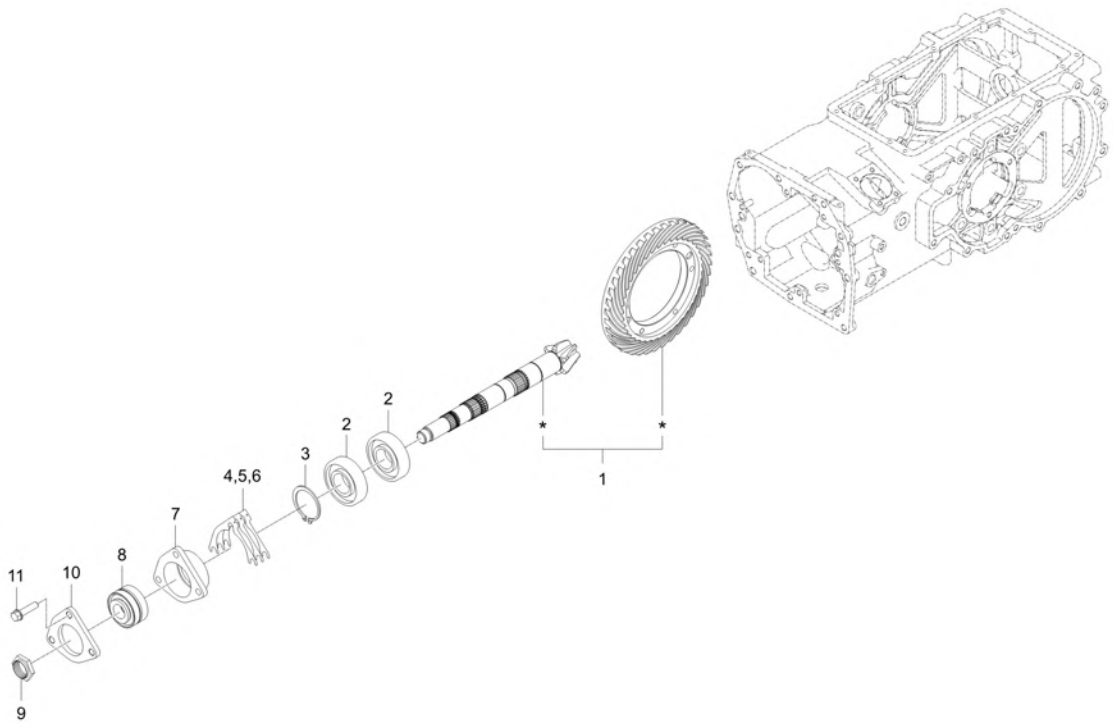

A : DK6010HSE

No.	Part Number	Description	Qty A	Qty B	Qty C	Qty D	Qty E	I.C	Remark
1	TD22-0057B	ASSYGEAR,BEVELSPIRAL dnr v	1						
2	08101-06307	BEARING, BALL	2						#6307
3	04612-00350	CIR CLIP, EXTERNAL	1						
4	T2610-23831	SHIM0.1	1						
5	T2610-23841	SHIM0.2 dnr v	1						
6	T2610-23851	SHIM0.5	1						
7	T2610-23823	CASE, BEARING	1						
8	38240-2214-1	BEARING,TAPER ROLLER	1						NTN30305D DB+4.5
9	31220-2234-2	NUT	1						HEX32*17
10	T2610-23882	COVER, BEARING	1						
11	01774-51040	FLANGE BOLT	3						

----> Old replace New
<---- New replace Old
<-X-> Not interchangeable
<---> Interchangeable
<-O-> Interchangeable with another part(s)
* Please place an order assy(*)

https://tractormanualz.com/

TD2-G282001

REAR DIFFERENTIAL GROUP

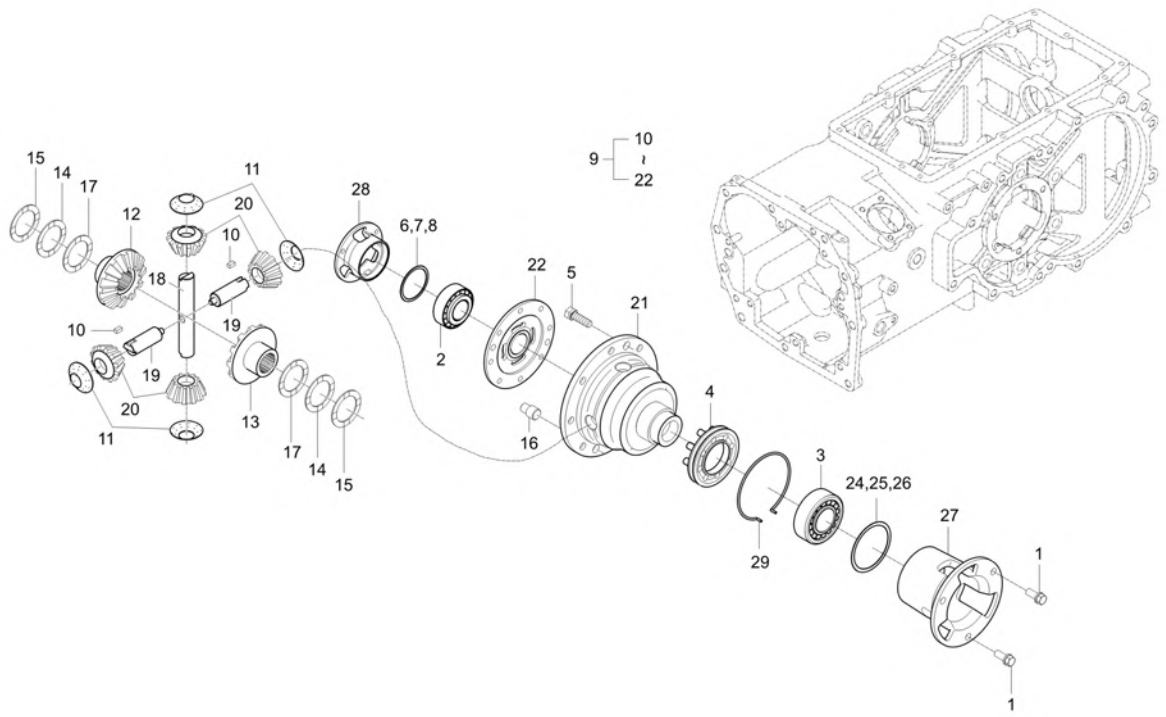

A : DK6010HSE

No.	Part Number	Description	Qty A	Qty B	Qty C	Qty D	Qty E	I.C	Remark
1	01133-51025	BOLT	6						M10XP1.25
2	08711-30209	BEARING,TAPER ROLLER	1						내경DIA45
3	08711-32011	BEARING,TAPER ROLLER	1						내경DIA55
4	37300-2661-4	DIFF LOCK SHIFTER	1						
5	T4115-43871	BOLT dnr v	8						
5	37800-4387-1	BOLT	8					<--O-->	M10xP1.25
6	T4520-44081	SHIM 0.1 v	1						T0.1
7	T4520-44091	SHIM 0.2	1						T0.2
8	T4520-44101	SHIM 0.4 dnr v	1						T0.4
9	T4115-26101	ASSYDIFFRENTIAL	1						
9	T4115-26102	ASSY DIFFRENTIAL	1					<--O-->	
10	31220-2628-1	KEY	2						
11	31220-2639-2	WASHER, DIFF PINION	4						
12	37300-2643-2	GEAR, DIFF RH	1						
13	37300-2644-2	DIFF GEAR LH	1						
14	37300-2648-1	WASHER 1, DIFF	2						
15	37300-2649-1	WASHER 2, DIFF	2						
16	37300-2817-2	PIN, PARALLEL	2						

----> Old replace New
<---- New replace Old
<-X-> Not interchangeable
<---> Interchangeable
<-O-> Interchangeable with another part(s)
* Please place an order assy(*)

https://tractormanualz.com/

TD2-G282001

REAR DIFFERENTIAL GROUP

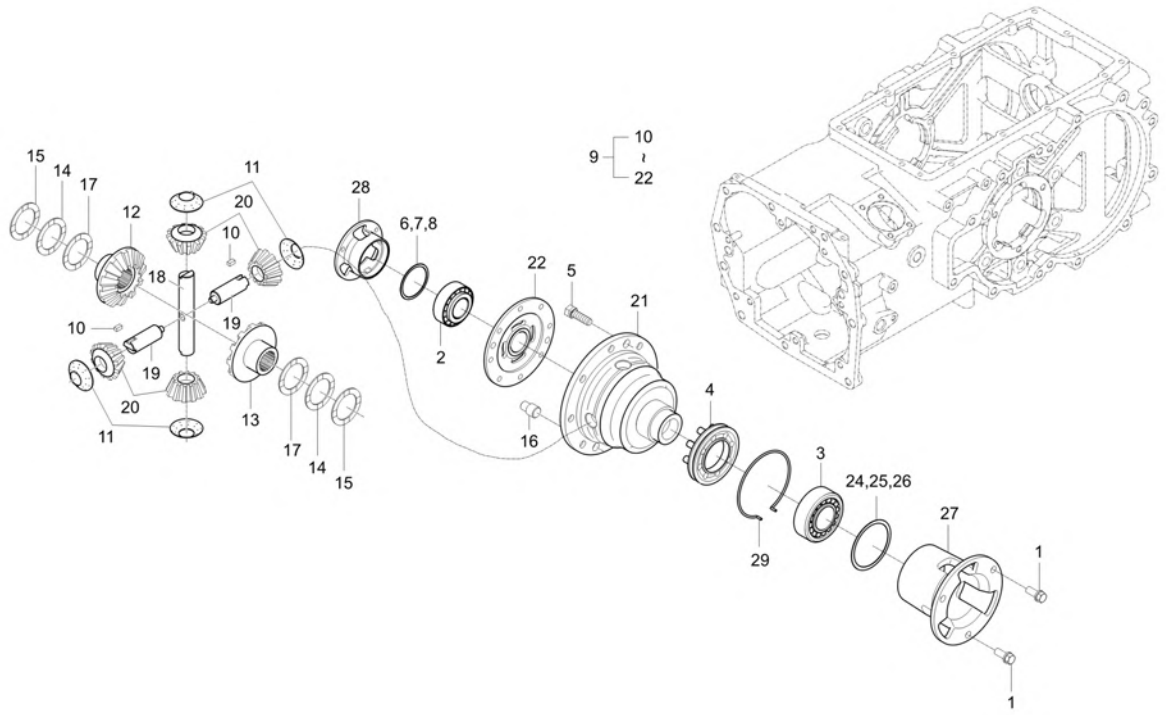

A : DK6010HSE

No.	Part Number	Description	Qty A	Qty B	Qty C	Qty D	Qty E	I.C	Remark
17	38240-2647-2	WASHER, DIFF.3	2						
18	T4158-26341	SHAFT,DIFF.PINION 1	1						
19	T4158-26331	SHAFT,DIFF.PINION 2	2						
20	T4158-26351	PINION v	4						
21	T4115-26511	CASE, DIFFRENTIAL v	1						
21	38240-2651-5	DIFFERENTIAL SYSTEM CASE	1					<--O-->	
22	T4115-26521	COVER,DIFFERENTIAL CASE v	1						
22	38240-2652-3	DIFFERENTIAL CAP	1					<--O-->	
24	T5410-26161	SHIM 0.1	1						
25	T5410-26171	SHIM 0.2	1						
26	T5410-26181	SHIM 0.5T	1						
27	T5715-26561	CASE,DIFF. BEARING LH	1						
28	T5715-26571	CASE,DIFF. BEARING RH	1						
29	T5715-26591	HOLDING, SPRING	2						
30	01133-51025	BOLT	8						M10XP1.25

----> Old replace New
<---- New replace Old
<-X-> Not interchangeable
<---> Interchangeable
<-O-> Interchangeable with another part(s)
* Please place an order assy(*)

https://tractormanualz.com/

TD2-G283002

REAR DIFF LOCK GROUP

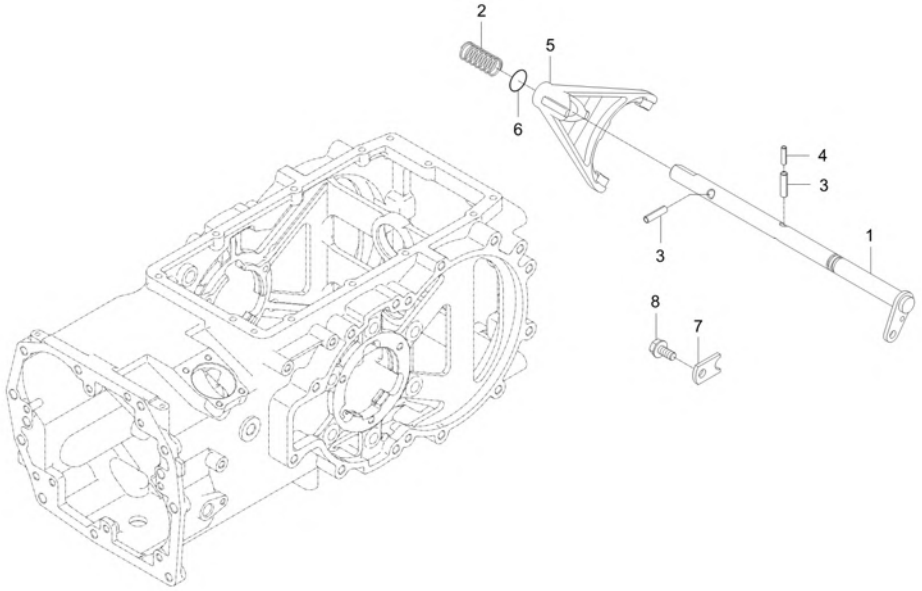

A : DK6010HSE

No.	Part Number	Description	Qty A	Qty B	Qty C	Qty D	Qty E	I.C	Remark
1	TD22-0028A	SHAFT,DIFFLOCKLEVER	1						
2	T2555-26641	FRICTION SPRING	1						
3	05411-00840	PIN, SPRING	2						DIA8*40
4	05411-00540	PIN,SPRING	1						
5	T5715-26631	FORK,SHAFT	1						
6	04811-00140	O RING	1						
7	T2555-23331	STOPPER	1						
8	01754-50816	BOLT, FLANGE	1						M8XP1.25

----> Old replace New
<---- New replace Old
<-X-> Not interchangeable
<---> Interchangeable
<-O-> Interchangeable with another part(s)
* Please place an order assy(*)

https://tractormanualz.com/

TD2-G293002

BRAKE GROUP

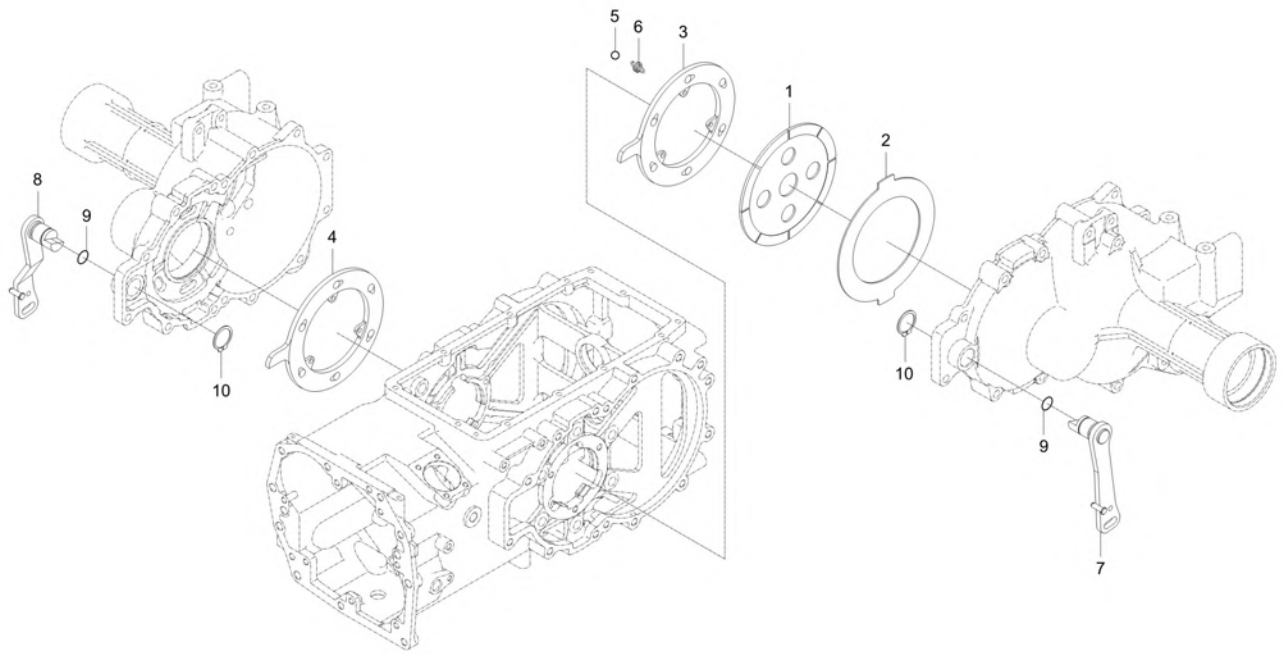

A : DK6010HSE

No.	Part Number	Description	Qty A	Qty B	Qty C	Qty D	Qty E	I.C	Remark
1	T5755-28211	BREAK DISC	6						
2	T5715-28222	PLATE, BRAKE	6						
3	T5715-28243	PLATE,CAM LH	1						
4	T5715-28253	PLATE,CAM RH	1						
5	07715-00805	BALL,STEEL obs v	12						5/8"
6	T2555-28461	FRICTION SPRING	6						
7	T5715-28272	LEVER, BRAKE CAM LH	1						
8	TD22-0043A	LEVER,BRAKECAMRH	1						
9	04811-00240	O RING	2						P24
10	04612-00300	SNAP RING	2						

----> Old replace New
<---- New replace Old
<-X-> Not interchangeable
<---> Interchangeable
<-O-> Interchangeable with another part(s)
* Please place an order assy(*)

https://tractormanualz.com/

TD2-G2A1001

REAR AXLE GROUP

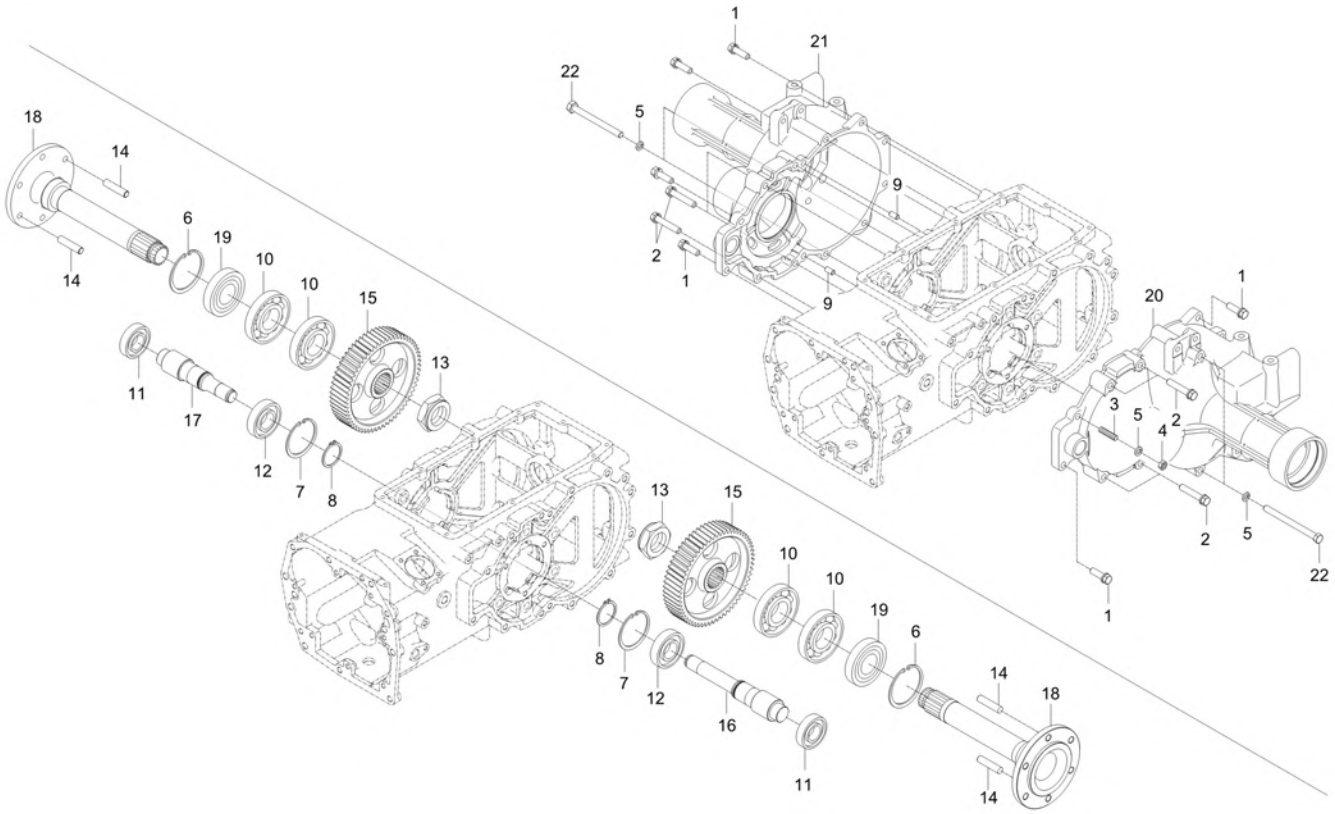

A : DK6010HSE

No.	Part Number	Description	Qty A	Qty B	Qty C	Qty D	Qty E	I.C	Remark
1	01133-51240	BOLT, WASHER	6						M12XP1.25
2	01133-51265	BOLT	8						M12XP1.25
3	01574-51235	STUD	4						M12*1.25*30
4	02176-50120	NUT	4						M12XP1.25
5	04512-50120	SPRING WASHER	10						M12
6	04611-01000	RING,SNAP	2						
7	04611-01000	RING,SNAP	2						
8	04811-00390	O RING	2						
9	05012-01018	PIN, STRAIGHT	4						
10	08101-06211	BEARING,BALL	4						#6211
11	08101-06308	BALL BEARING	2						#6308
12	08101-06309	BALL BEARING v	2						#6309
13	T4125-27202	NUT	2						
14	T4340-27122	STUD	4						
15	T5715-26672	GEAR60	2						
16	T5715-26713	SHAFT, 11 GEAR(LH)	1						
17	T5715-26723	SHAFT, 11 GEAR (RH)	1						
18	T5715-27112	WHEEL SHAFT	2						

----> Old replace New
<---- New replace Old
<-X-> Not interchangeable
<---> Interchangeable
<-O-> Interchangeable with another part(s)
* Please place an order assy(*)

https://tractormanualz.com/

TD2-G2A1001

REAR AXLE GROUP

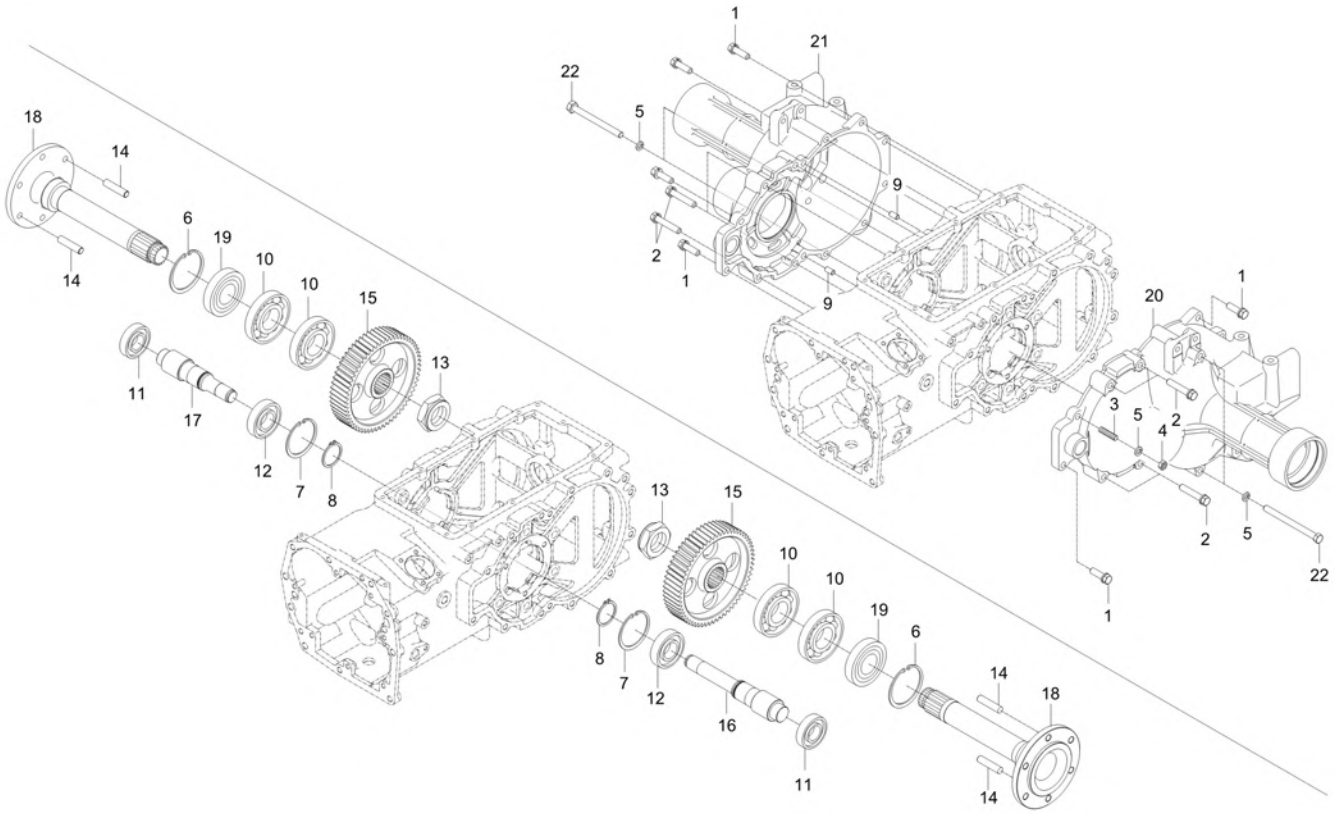

A : DK6010HSE

No.	Part Number	Description	Qty A	Qty B	Qty C	Qty D	Qty E	I.C	Remark
19	T5715-27131	OIL SEAL	2						
20	T5715-28133	CASE, REAR AXLE LH	1						
20	T5715-28134	CASE,REAR AXLE LH	1					<------	
20	T5715-28135	CASE,REAR AXLE LH	1					<------	
20	T5715-28136	CASE,REAR AXLE LH	1					<----->	
21	T5715-28143	CASE, REAR AXLE RH	1						
21	T5715-28144	CASE,REAR AXLE RH	1					<------	
21	T5715-28145	CASE,REAR AXLE RH	1					<------	
21	T5715-28146	CASE,REAR AXLE RH	1					<----->	
22	T5715-28321	BOLT	6						

----> Old replace New
<---- New replace Old
<-X-> Not interchangeable
<---> Interchangeable
<-O-> Interchangeable with another part(s)
* Please place an order assy(*)

https://tractormanualz.com/

TD2-G2C5002

PTO SHIFT FORK GROUP

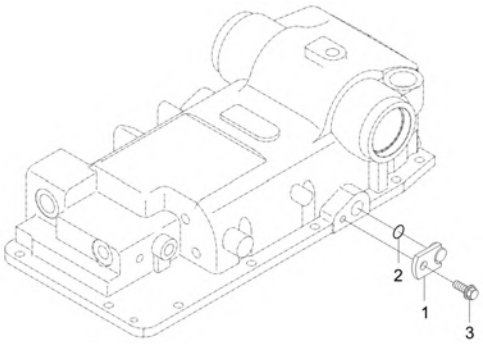

A : DK6010HSE

No.	Part Number	Description	Qty A	Qty B	Qty C	Qty D	Qty E	I.C	Remark
1	T5715-25461	COVER	1						
2	04811-00140	O RING	1						
3	01754-50816	BOLT, FLANGE	1						M8XP1.25

----> Old replace New
<---> Interchangeable
* Please place an order assy(*)
<---- New replace Old
<-O-> Interchangeable with another part(s)
<-X-> Not interchangeable

https://tractormanualz.com/

TD2-G2G1002

REAR WHEEL GROUP

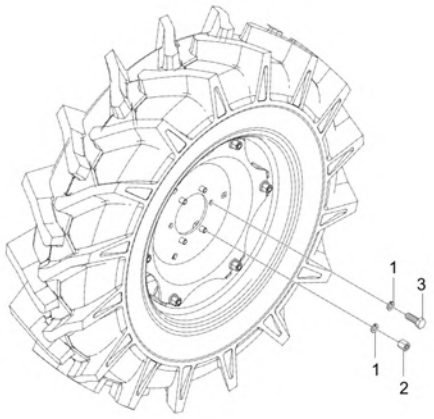

A : DK6010HSE

No.	Part Number	Description	Qty A	Qty B	Qty C	Qty D	Qty E	I.C	Remark
1	04512-50160	WASHER, SPRING	12						M16
2	T4340-27131	NUT	4						
3	01073-51630	BOLT v	8						M16XP1.5

----> Old replace New
<---- New replace Old
<-X-> Not interchangeable
<---> Interchangeable
<-O-> Interchangeable with another part(s)
* Please place an order assy(*)

https://tractormanualz.com/

TD2-G2B1003

FRONT WHEEL DRIVE SHAFT GROUP

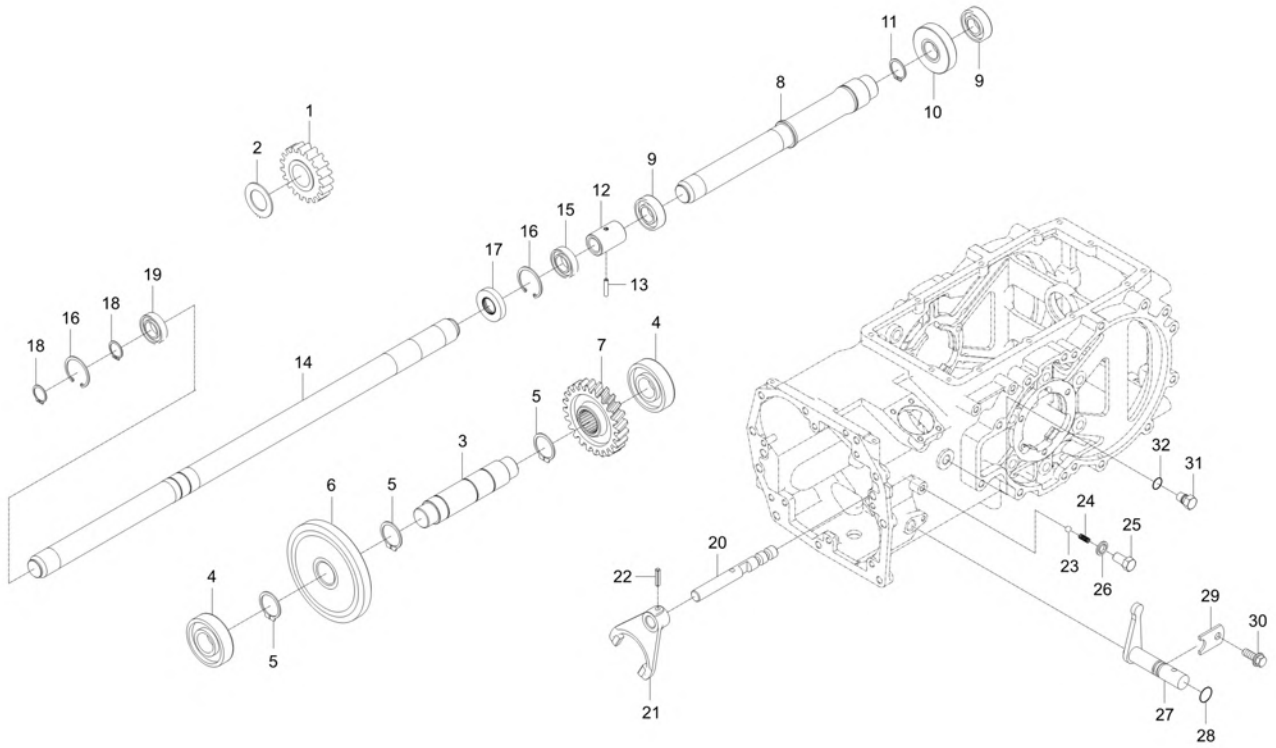

A : DK6010HSE

No.	Part Number	Description	Qty A	Qty B	Qty C	Qty D	Qty E	I.C	Remark
1	T5715-44511	GEAR,SPUR 20	1						
2	34150-2156-1	COLLAR	1						T2*42*42
3	TD22-0044A	SHAFT,4WD 1	1						
4	08101-06305	BEARING,BALL v	2						DIA25
5	04612-00300	SNAP RING	3						
6	T5715-44531	GEAR34	1						
7	T5715-44611	GEAR 24	1						
8	TD22-0045A	SHAFT,4WD2	1						
9	T2555-06205	BALL BEARING	2						#6205, GMB CHINA
10	T5715-44631	GEAR 19	1						
11	04612-00300	SNAP RING	1						
12	T4620-44592	COUPLING	1						
13	05411-00635	PIN, SPRING	1						DIA5*36
14	TD22-0046A	SHAFT,4WD3	1						
15	T2555-06005	BALL BEARING	1						#6005, GMB CHINA
16	04611-00470	RING,SNAP	2						
17	09502-55210	SEAL OIL v	1						DIA25
18	04612-00250	CIR-CLIP	2						

----> Old replace New <---- New replace Old <-X-> Not interchangeable
<---> Interchangeable <-O-> Interchangeable with another part(s)
* Please place an order assy(*)

https://tractormanualz.com/

TD2-G2B1003

FRONT WHEEL DRIVE SHAFT GROUP

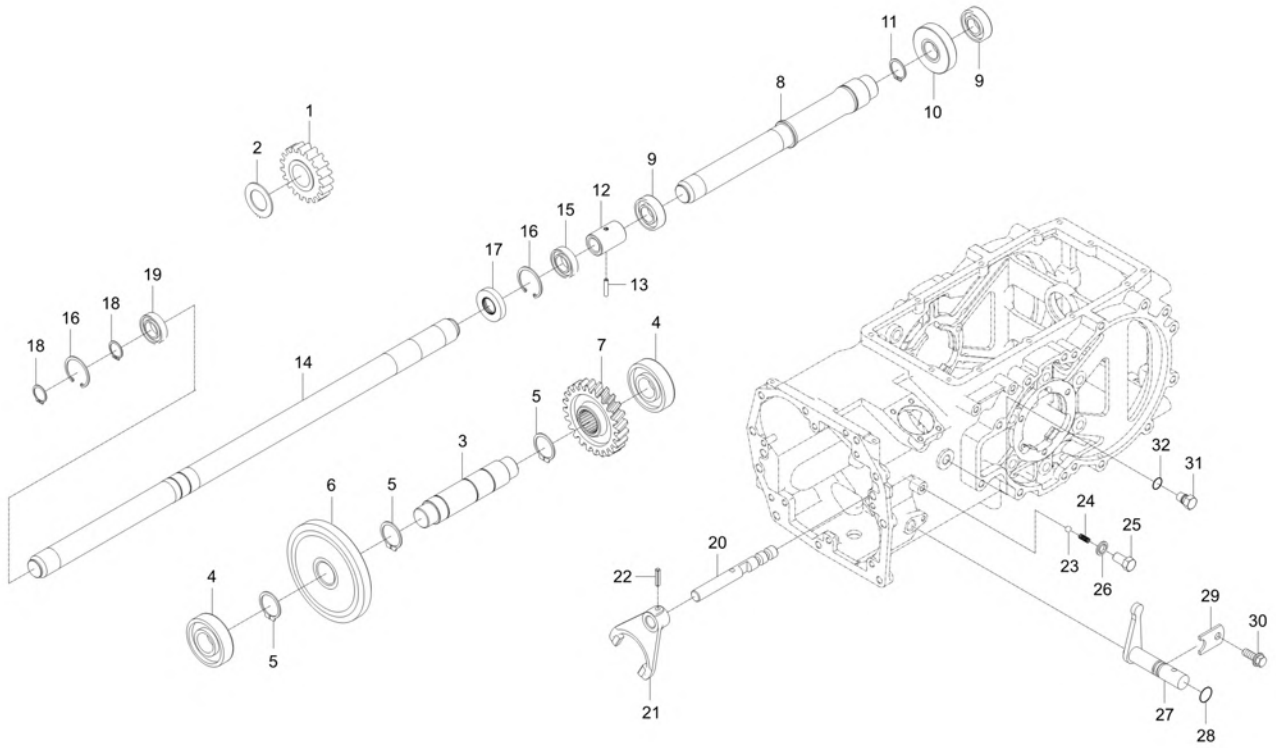

A : DK6010HSE

No.	Part Number	Description	Qty A	Qty B	Qty C	Qty D	Qty E	I.C	Remark
19	08141-06005	BEARING,BALL v	1						#6005DD
20	T5715-44582	ROD, FORK	1						
21	T5715-44571	FORK	1						
22	05411-00625	PIN, SPRING v	1						DIA6.4XL25
23	07715-01605	BALL,STEEL	1						5/16"
24	62331-1853-2	SPRING	1						DIA1.4
25	01173-51018	BOLT v	1						
26	04717-01000	WASHER, SEAL	1						M10
27	T5715-44561	SHIFT ARM	1						
28	04811-00140	O RING	1						
29	T2555-23331	STOPPER	1						
30	01754-50816	BOLT, FLANGE	1						M8XP1.25
31	TD22-0091A	BOLT,CAP	1						
32	04811-00180	O RING	1						P18

----> Old replace New <---- New replace Old <-X-> Not interchangeable
<---> Interchangeable <-O-> Interchangeable with another part(s)
* Please place an order assy(*)

https://tractormanualz.com/

TD2-G2C1002

PTO INPUT SHAFT GROUP

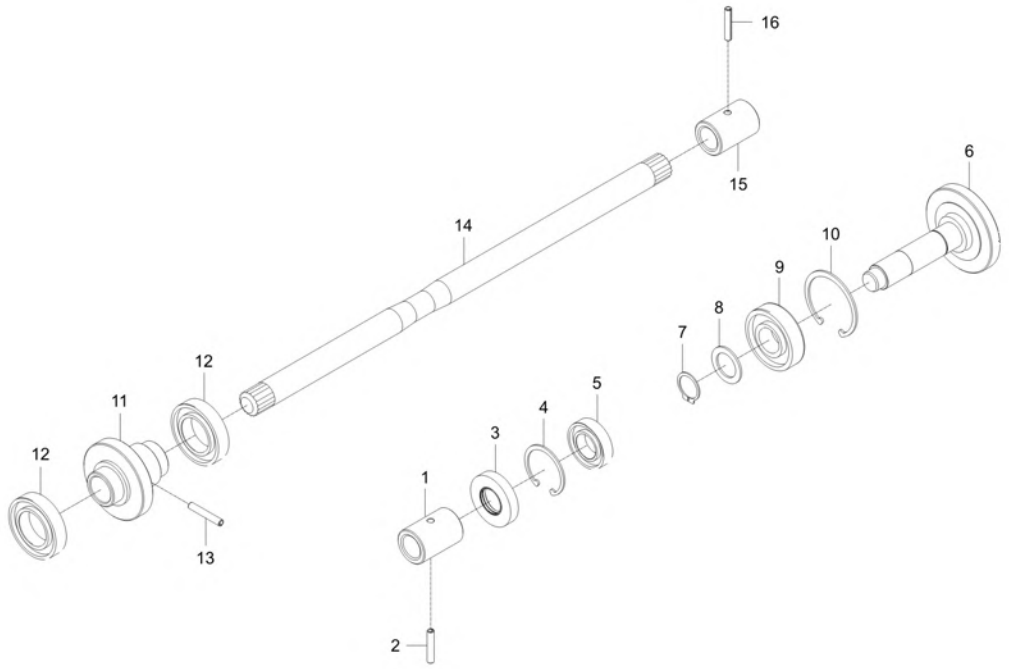

A : DK6010HSE

No.	Part Number	Description	Qty A	Qty B	Qty C	Qty D	Qty E	I.C	Remark
1	37805-4452-1	COUPLING	1						
2	05411-00635	PIN, SPRING	1						DIA5*36
3	09502-55210	SEAL OIL v	1						DIA25
4	04611-00470	RING,SNAP	1						
5	T2555-06005	BALL BEARING	1						#6005, GMB CHINA
6	TD22-0036B	SHAFT, GEAR 25	1						
7	04612-00250	CIR-CLIP	1						
8	34150-2156-1	COLLAR	1						T2*42*42
9	08101-06305	BEARING,BALL v	1						DIA25
10	04611-00620	CIR CLIP, INTERNAL v	1						
11	TD22-0037B	SHAFT, GEAR 22	1						
12	T2555-06007	BALL BEARING	2						#6007, GMB CHINA
13	05411-00640	PIN, SPRING	1						
14	T5715-25231	SHAFT 3,PTO DRIVE	1						
15	37805-4452-1	COUPLING	1						
16	05411-00635	PIN, SPRING	1						DIA5*36

----> Old replace New
<----> Interchangeable
* Please place an order assy(*)
<---- New replace Old
<-O-> Interchangeable with another part(s)
<-X-> Not interchangeable

https://tractormanualz.com/

TD2-G2C3002

PTO CLUTCH GROUP

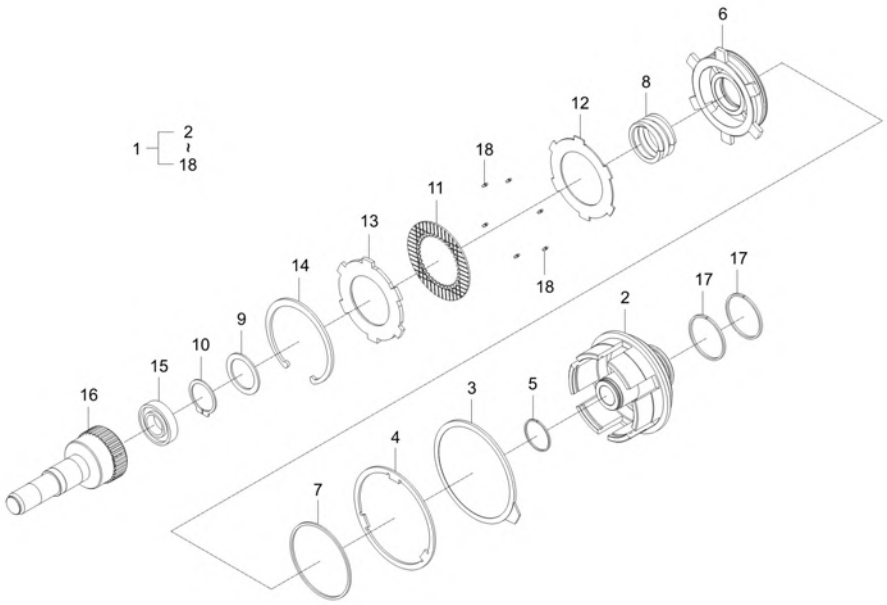

A : DK6010HSE

No.	Part Number	Description	Qty A	Qty B	Qty C	Qty D	Qty E	I.C	Remark
1	TD22-0030B	ASSY CLUTCH nfs v	1						
2	TD22-0031A	BODY,CLUTCH	1						
3	T2615-25711	PLATE, BRAKE	1						
4	T2615-25721	PLATE, RETURN	1						
5	T2615-25661	RING, PISTON	1						
6	T5520-23651	PISTON	1						
7	T2615-25671	RING, PISTON v	1						
8	TC22-0094A	SPRING	1						
9	T2615-25681	SPACER	1						
10	04612-00350	CIR CLIP, EXTERNAL	1						
11	T2615-25771	DISK, CLUTCH	4						
12	T2615-25782	PLATE,CLUTCH	4						
13	T2615-25742	PLATE,PRESSURE	1						
14	04611-00920	RING SNAP	1						DIA92
15	T2555-06004	BALL BEARING	1						#6004, GMB CHINA
16	TD22-0033A	HUB,SPLINE	1						
17	TD22-0084A	RING, SEAL dnr v	2						
18	T2615-25791	RUBBER	9						

----> Old replace New
<---- New replace Old
<-X-> Not interchangeable
<---> Interchangeable
<-O-> Interchangeable with another part(s)
* Please place an order assy(*)

https://tractormanualz.com/

TD2-G2C4006

PTO SHAFT GROUP

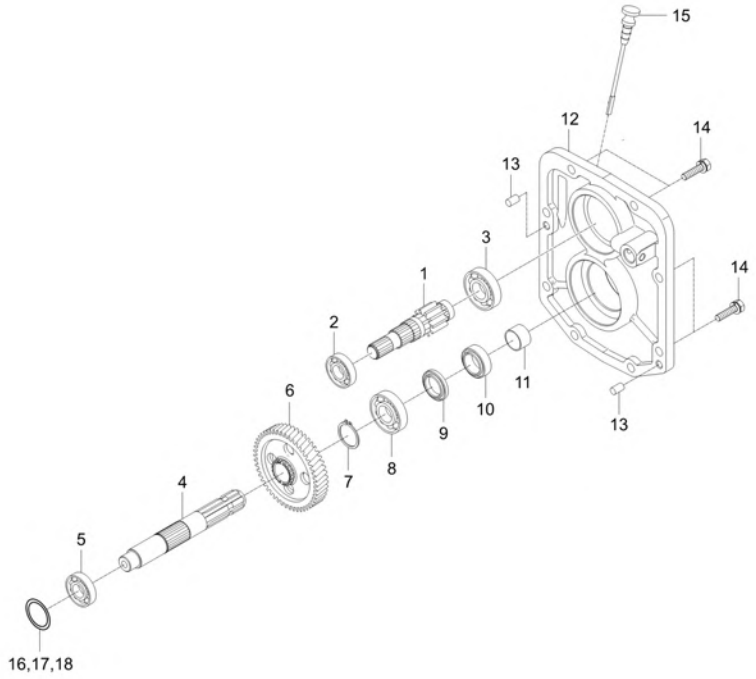

A : DK6010HSE

No.	Part Number	Description	Qty A	Qty B	Qty C	Qty D	Qty E	I.C	Remark
1	T5715-25263	SHAFT, GEAR	1						
1	TD22-0128A	SHAFT, GEAR-10	1					<----->	
2	08101-06305	BEARING,BALL v	1						DIA25
3	08101-06306	BEARING, BALL	1						#6306
4	T5715-25281	SHAFT,PTO OUTPUT	1						
5	08101-06305	BEARING,BALL v	1						DIA25
6	T5715-25333	GEAR 47	1						
7	04612-00350	CIR CLIP, EXTERNAL	1						
8	08101-06307	BEARING, BALL	1						#6307
9	T4620-25442	SEAL, OIL	1						
10	T4620-25452	SEAL, OIL	1						
11	T4620-25383	SLEEVE	1						
12	T5710-25411	CASE PTO	1						
13	05012-00818	PIN, PARALLEL	2						
14	01133-51035	WASHER BOLT	8						M10X1.25
15	T5715-25901	GAUGE,OIL	1						
16	K5400-14572	SHIM obs v	1						T0.1
17	K5400-14582	SHIM	1						T0.2

----> Old replace New
<---- New replace Old
<-X-> Not interchangeable
<---> Interchangeable
<-O-> Interchangeable with another part(s)
* Please place an order assy(*)

https://tractormanualz.com/

TD2-G2C4006

PTO SHAFT GROUP

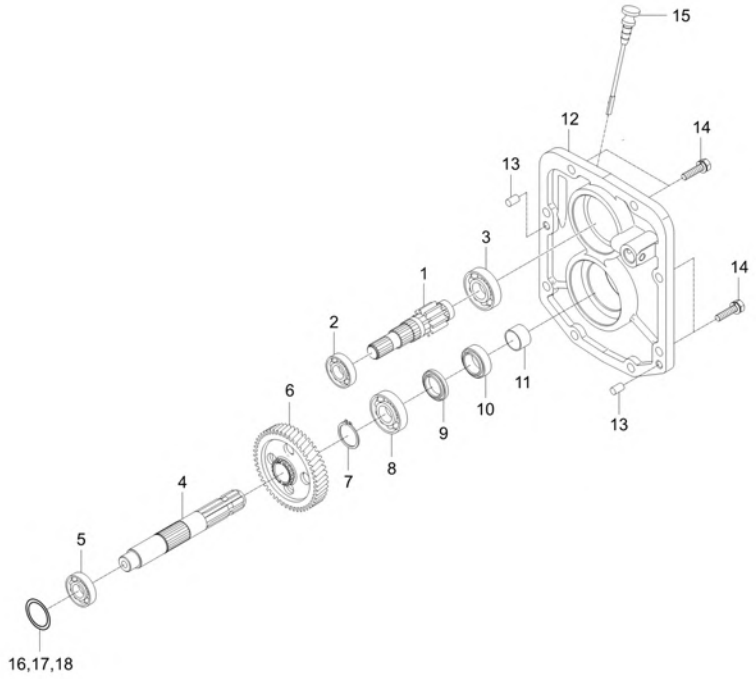

A : DK6010HSE

No.	Part Number	Description	Qty A	Qty B	Qty C	Qty D	Qty E	I.C	Remark
18	K5400-14592	SHIM v	1						T0.5

----> Old replace New
<----> Interchangeable
* Please place an order assy(*)
<---- New replace Old
<-O-> Interchangeable with another part(s)
<-X-> Not interchangeable

https://tractormanualz.com/

TD2-G2F1001

MID PTO SHAFT GROUP

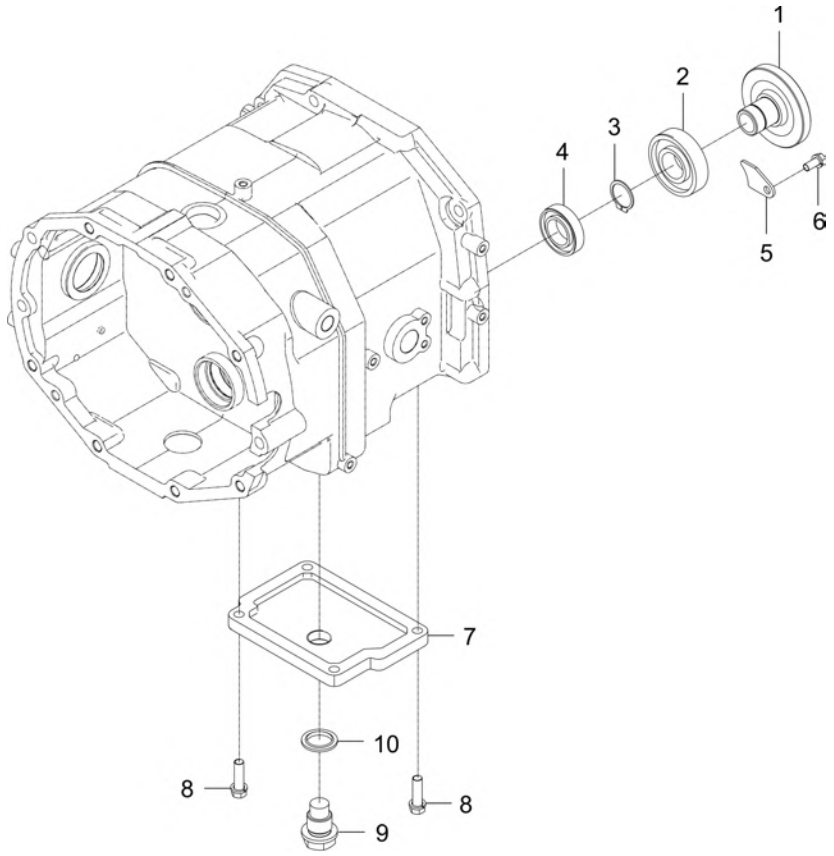

A : DK6010HSE

No.	Part Number	Description	Qty A	Qty B	Qty C	Qty D	Qty E	I.C	Remark
1	TD22-0083B	GEAR-26	1						
2	08101-06306	BEARING, BALL	1						#6306
3	04612-00300	SNAP RING	1						
4	T2555-06006	BALL BEARING	1						#6006, GMB CHINA
5	T4710-22242	PLATE, FIXED	1						
6	01123-50818	BOLT, WASHER	1						M8*P1.25
7	TD22-0075A	COVER,MIDPTO	1						
8	01133-51035	WASHER BOLT	4						M10X1.25
9	T4125-14261	PLUG	1						
10	04717-02650	WASHER, SEAL	1						

----> Old replace New <---- New replace Old <-X-> Not interchangeable
<---> Interchangeable <-O-> Interchangeable with another part(s)
* Please place an order assy(*)

https://tractormanualz.com/

TD2-G311002

FRONT AXLE SUPPORT GROUP

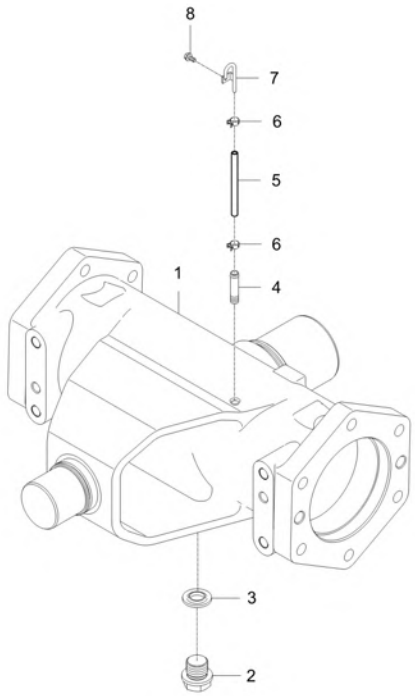

A : DK6010HSE

No.	Part Number	Description	Qty A	Qty B	Qty C	Qty D	Qty E	I.C	Remark
1	T5715-42142	SUPPORT, FRONT AXLE RR dnr v	1						
2	06331-45010	PLUG v	1						M10*1.25
3	04717-01000	WASHER, SEAL	1						M10
4	T2630-42161	CONNECTOR, AIR BREATHER	1						
5	TD23-0032A	HOSE,OVERFLOW	1						
6	14911-4275-1	CLIP, TUBE	1						T0.8*#12
7	T5520-36591	CONNECTOR, AIR BREATHER	1						
8	01754-50816	BOLT, FLANGE	1						M8XP1.25

----> Old replace New <---- New replace Old <-X-> Not interchangeable
<---> Interchangeable <-O-> Interchangeable with another part(s)
* Please place an order assy(*)

https://tractormanualz.com/

TD2-G332002

FRONT AXLE BRACKET GROUP

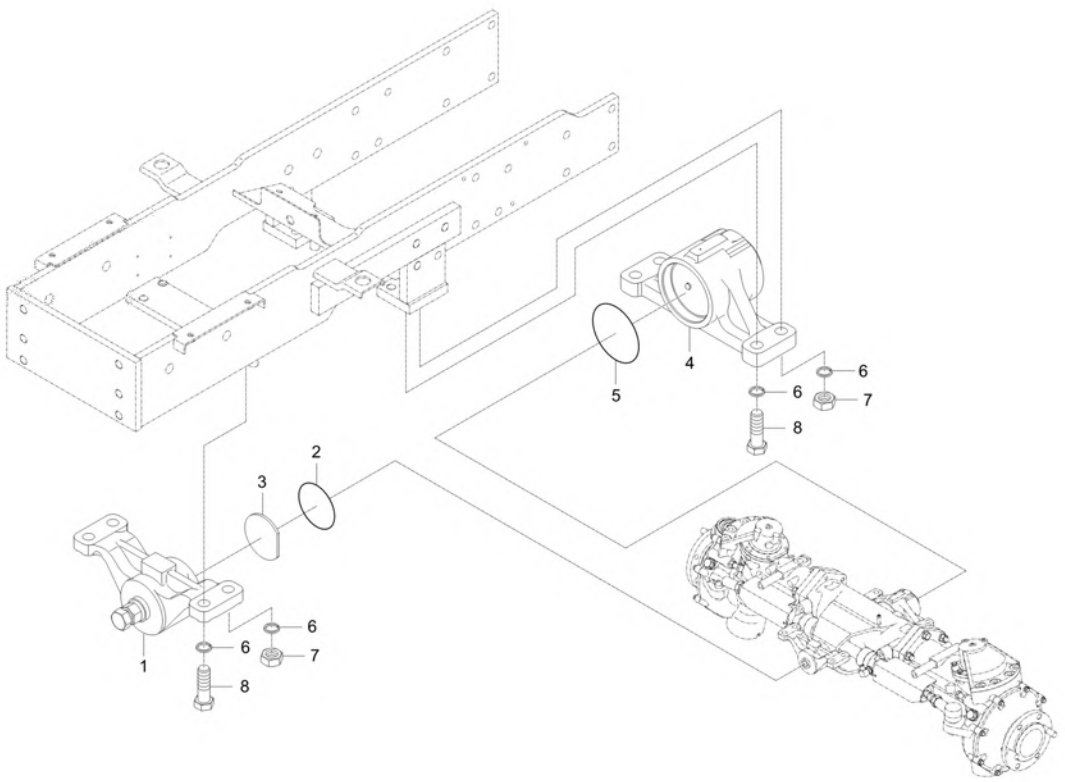

A : DK6010HSE

No.	Part Number	Description	Qty A	Qty B	Qty C	Qty D	Qty E	I.C	Remark
1	T4125-41602	FRONTBRAKETASSEMBLY	1						
2	04811-00490	O RING	1						
3	38440-4467-3	COLLAR	1						
4	TD23-0010A	ASSY BRACKET-RR	1						
5	04811-50700	O RING	1						
6	04512-50140	SPRING WASHER	8						
7	02176-50140	NUT	4						M14XP1.5
8	01176-51440	BOLT	4						M14*1.5*40

----> Old replace New
<----> Interchangeable
* Please place an order assy(*)
<---- New replace Old
<-O-> Interchangeable with another part(s)
<-X-> Not interchangeable

https://tractormanualz.com/

TD2-G312001

FRONT DIFF SYSTEM GROUP

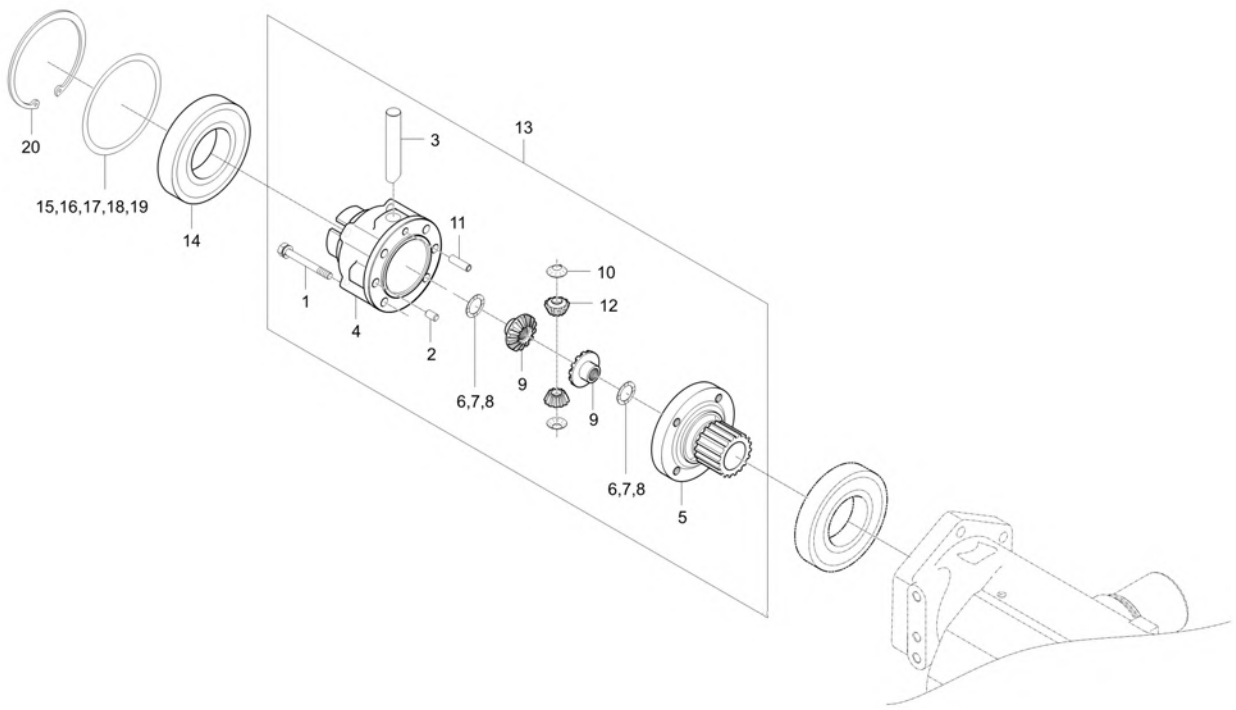

A : DK6010HSE

No.	Part Number	Description	Qty A	Qty B	Qty C	Qty D	Qty E	I.C	Remark
1	01133-51075	BOLT, WASHER	4						M10XP1.25
2	05012-01018	PIN, STRAIGHT	2						DIA10XL18
3	T2630-43111	SHAFT, DIFF. PINION	1						
4	T2630-43121	CASE, FRONT DIFF	1						
5	T4125-42321	COVER v	1						
5	T4125-42322	COVER,DIFFERENTIAL CASE	1					<----->	
6	T4520-43071	SHIM, 0.8	2						T0.8
7	T4520-43081	SHIM, 0.1	2						T1.0
8	T4520-43091	SHIM, 1.2	2						T1.2
9	T4520-43141	GEAR, DIFF SIDE v	2						
10	T4520-43151	WASHER, DIFF PINION	2						
11	T4520-43171	PIN, PARALLEL	1						
12	T4682-43132	PINION, DIFFERENTIAL	2						
13	T4125-43103	FRONT DIFFERENTIAL ASSEMBLY	1						
14	08101-06212	BEARING, BALL	2						DIA60
15	T2630-43012	SHIM	1						T0.8
16	T2630-43022	SHIM	1						T1.0
17	T2630-43032	SHIM	1						T1.2

----> Old replace New
<---- New replace Old
<-X-> Not interchangeable
<---> Interchangeable
<-O-> Interchangeable with another part(s)
* Please place an order assy(*)

https://tractormanualz.com/

TD2-G312001

FRONT DIFF SYSTEM GROUP

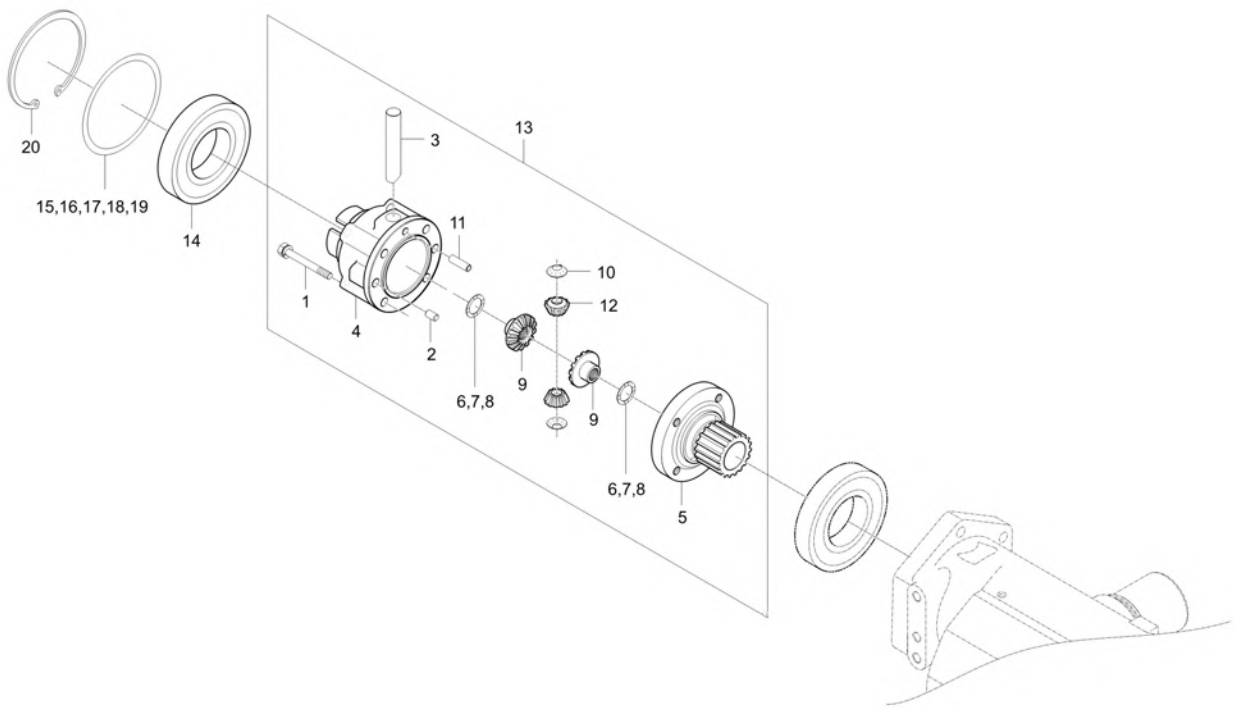

A : DK6010HSE

No.	Part Number	Description	Qty A	Qty B	Qty C	Qty D	Qty E	I.C	Remark
18	T2630-43042	SHIM	1						T2.0
19	T2630-43052	SHIM	1						T2.3
20	04611-01100	SNAP RING	1						

----> Old replace New
<----> Interchangeable
* Please place an order assy(*)
<---- New replace Old
<-O-> Interchangeable with another part(s)
<-X-> Not interchangeable

https://tractormanualz.com/

TD2-G313002

BEVEL PINION SHAFT GROUP

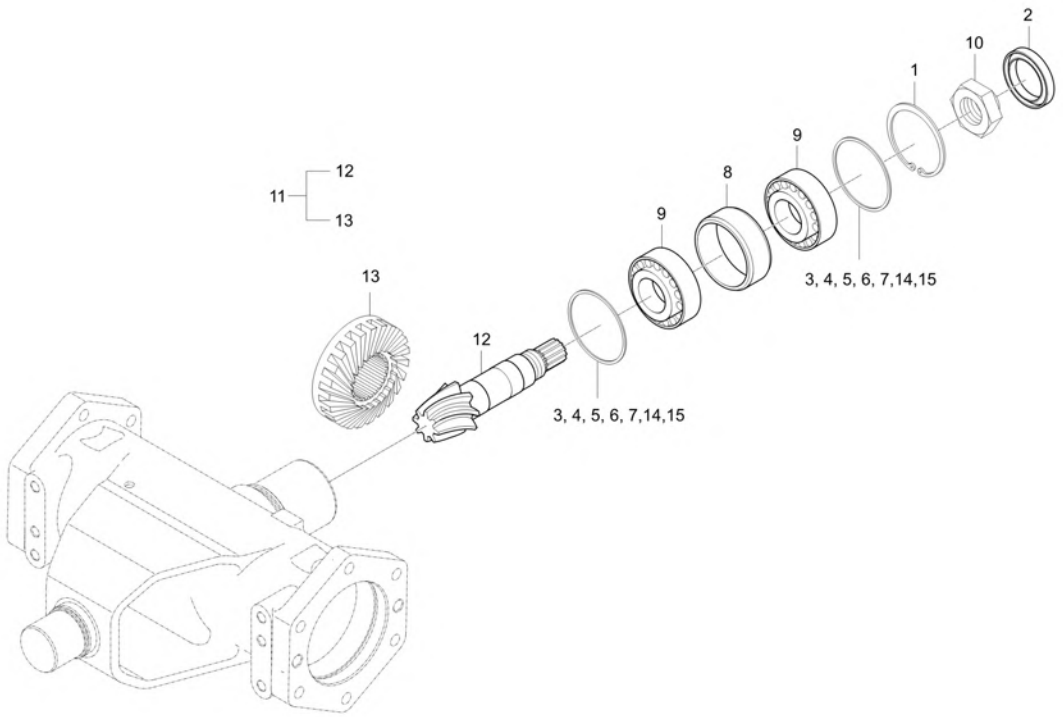

A : DK6010HSE

No.	Part Number	Description	Qty A	Qty B	Qty C	Qty D	Qty E	I.C	Remark
1	04611-00580	RING SNAP	1						58
2	T2630-42291	SEAL OIL	1						
3	T2630-42452	COLLAR, ADJUSTING	2						T5.8
4	T2630-42462	COLLAR, ADJUSTING	2						T5.9
5	T2630-42472	COLLAR, ADJUSTING obs v	2						T6.0
6	T2630-42482	COLLAR, ADJUSTING	2						T6.1
7	T2630-42492	COLLAR, ADJUSTING	2						T6.2
8	T2630-42752	BUSHING	1						
9	T4128-33228	BEARING TAPE ROLLER v	2						
10	T4620-21591	NUT,LOOK(28)	1						
11	TD23-0007A	ASSY GEAR, BEVEL SPIRAL	1						
12	TD23-0005A	SHAFT,PINIONBEVELSPIRAL9	1						
13	TD23-0006A	GEAR,BEVELSPIRAL23	1						
14	T2630-42501	COLLAR, ADJUSTING	2						T6.3
15	T2630-42511	COLLAR, ADJUSTING	2						T6.4

----> Old replace New <---- New replace Old <-X-> Not interchangeable
<---> Interchangeable <-O-> Interchangeable with another part(s)
* Please place an order assy(*)

https://tractormanualz.com/

TD2-G314001

BEVEL GEAR CASE GROUP

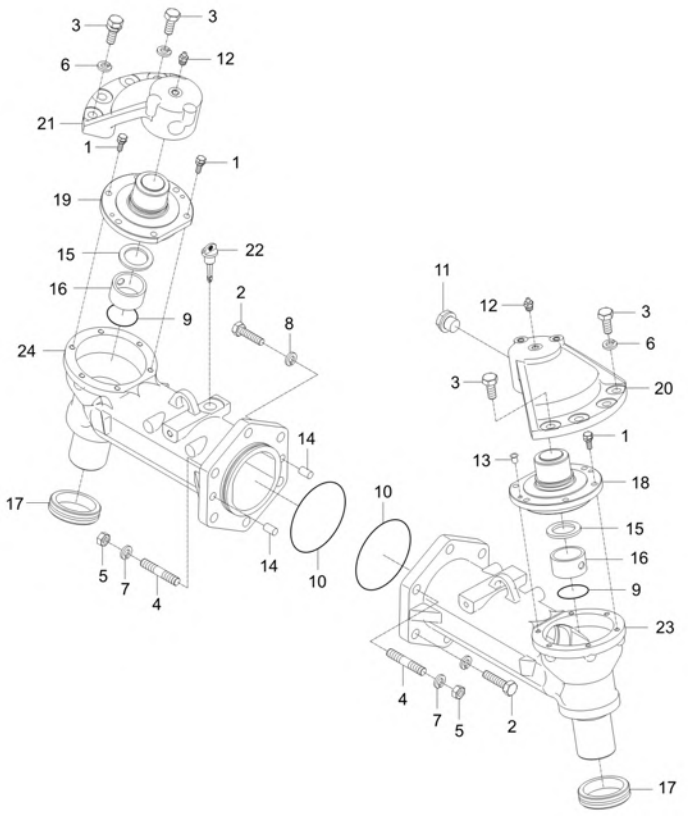

A : DK6010HSE

No.	Part Number	Description	Qty A	Qty B	Qty C	Qty D	Qty E	I.C	Remark
1	01123-50825	BOLT WITH WASHER	12						M8XP1.25
2	01173-51445	BOLT	8						M14*P1.5*45
3	01176-51235	BOLT v	8						
4	01517-51440	STUD v	4						
5	02176-50140	NUT	4						M14XP1.5
6	04512-50120	SPRING WASHER	8						M12
7	04512-50140	SPRING WASHER	12						
8	04717-01400	WASHER,SEAL	1						
9	04811-00490	O RING	2						
10	04811-51050	O RING	2						
11	06331-45014	PLUG	1						M14XP1.5
12	06611-15010	NIPPLE, GREASE v	2						
13	32210-2758-1	PLUG	4						M12
14	37805-4350-1	PIN, DOWEL	4						
15	T4682-43261	COLLAR,THRUST	2						
16	T4682-43372	DX BUSH v	2						
17	T4818-43451	SEAL, FLOATING v	2						
18	T5520-31533	WINNOWBEARINGHOLDER	1						

----> Old replace New <---- New replace Old <-X-> Not interchangeable
<---> Interchangeable <-O-> Interchangeable with another part(s)
* Please place an order assy(*)

https://tractormanualz.com/

TD2-G314001

BEVEL GEAR CASE GROUP

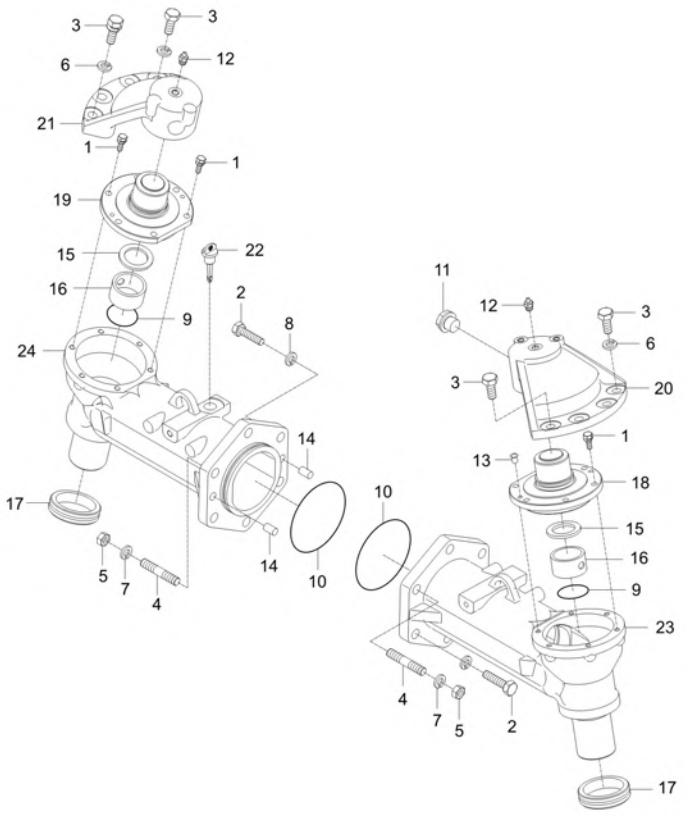

A : DK6010HSE

No.	Part Number	Description	Qty A	Qty B	Qty C	Qty D	Qty E	I.C	Remark
19	T5520-31542	WINNOWBEARINGHOLDER	1						
20	T5520-31562	SUPPORT, AXLE CASE	1						
21	T5520-31572	SUPPORT, AXLE CASE	1						
22	T5520-36571	GAUGE,OIL	1						
22	T5520-36572	GAUGE,OIL	1					<------	
23	T5715-43312	BEVEL GEAR CASE	1						
24	T5715-43332	BEVEL GEAR CASE	1						

----> Old replace New
<---- New replace Old
<-X-> Not interchangeable
<---> Interchangeable
<-O-> Interchangeable with another part(s)
* Please place an order assy(*)

https://tractormanualz.com/

TD2-G315001

BEVEL GEAR SHAFT GROUP

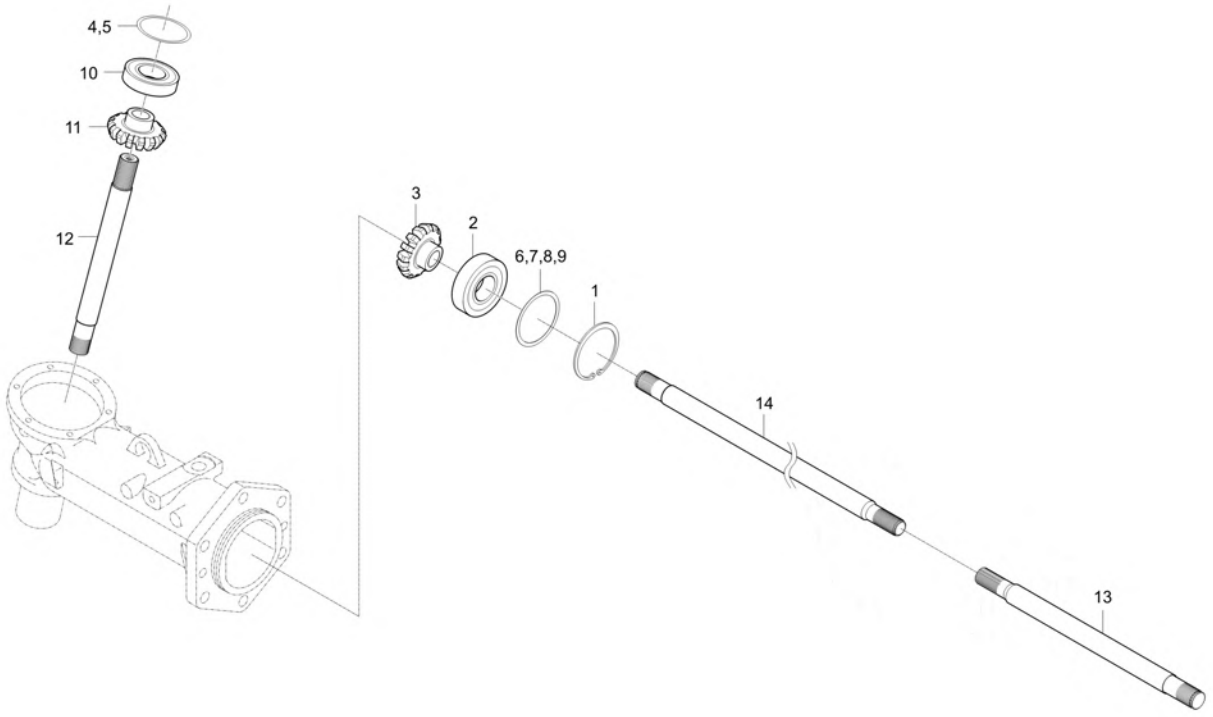

A : DK6010HSE

No.	Part Number	Description	Qty A	Qty B	Qty C	Qty D	Qty E	I.C	Remark
1	04611-00800	RING, SNAP	2						
2	08101-06307	BEARING, BALL	2						#6307
3	T4125-43242	GEAR 11 BEVEL	2						
4	T4520-43011	SHIM, 0.1 dnr v	2						T0.1
5	T4520-43021	SHIM, 0.2 v	2						T0.2
6	T4520-43031	SHIM, 0.4	2						T0.4
7	T4520-43041	SHIM, 0.8	2						T0.8
8	T4520-43051	SHIM, 0.1	2						T1.0
9	T4520-43061	SHIM, 1.2	2						T1.2
10	T4682-43731	BEARING,BALL v	2						
11	T5520-32041	GEAR, BEVEL 17	2						
12	T5520-32051	BEVEL GEAR SHAFT	2						
13	T5715-43211	SHAFT,DIFF. GEAR LH	1						
14	T5715-43221	SHAFT,DIFF. GEAR RH	1						

----> Old replace New
<---> Interchangeable
* Please place an order assy(*)
<---- New replace Old
<-O-> Interchangeable with another part(s)
<-X-> Not interchangeable

https://tractormanualz.com/

TD2-G316001

FRONT AXLE CASE GROUP

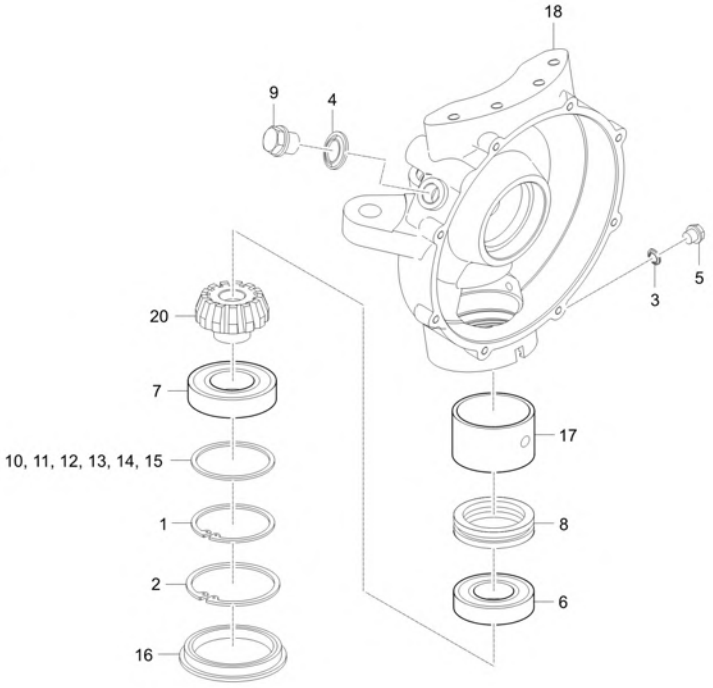

A : DK6010HSE

No.	Part Number	Description	Qty A	Qty B	Qty C	Qty D	Qty E	I.C	Remark
1	04611-00800	RING, SNAP	2						
2	04611-00920	RING SNAP	2						DIA92
3	04717-01000	WASHER, SEAL	2						M10
4	04717-02150	WASHER,SEAL	2						
5	06331-45010	PLUG v	2						M10*1.25
6	08101-06206	BEARING, BALL v	2						#6206
7	08101-06208	BEARING BALL v	2						#6208
8	08401-51107	THRUST BALL BEARING	2						
9	34150-1426-1	USE 34150-14261	2						DIA30X34
10	T4520-43011	SHIM, 0.1 dnr v	2						T0.1
11	T4520-43021	SHIM, 0.2 v	2						T0.2
12	T4520-43031	SHIM, 0.4	2						T0.4
13	T4520-43041	SHIM, 0.8	2						T0.8
14	T4520-43051	SHIM, 0.1	2						T1.0
15	T4520-43061	SHIM, 1.2	2						T1.2
16	T4620-43541	PLUG	2						
17	T4930-43601	BUSHING	2						
18	T5520-32513	CASE, FRONT AXLE LH	1						

----> Old replace New
<----> Interchangeable
* Please place an order assy(*)
<---- New replace Old
<-O-> Interchangeable with another part(s)
<-X-> Not interchangeable

https://tractormanualz.com/

TD2-G316001

FRONT AXLE CASE GROUP

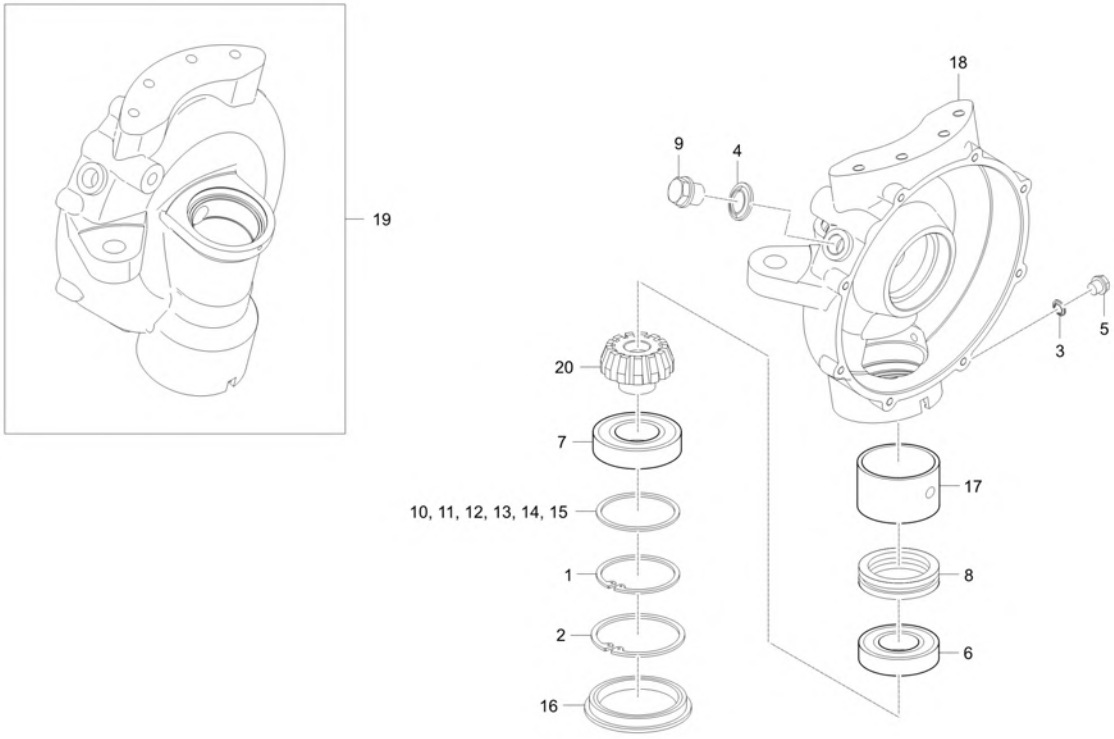

A : DK6010HSE

No.	Part Number	Description	Qty A	Qty B	Qty C	Qty D	Qty E	I.C	Remark
18	TD23-0046A	CASE, FRONT AXLE-LH	1					<------	
18	TD23-0046B	CASE, FRONT AXLE LH	1					<------	
19	T5520-32523	CASE, FRONT AXLE RH	1						
19	TD23-0047A	CASE, FRONT AXLE-RH	1					<------	
19	TD23-0047B	CASE, FRONT AXLE RH	1					<------	
20	T5520-32532	GEAR, BEVEL 10	2						

----> Old replace New
<---- New replace Old
<-X-> Not interchangeable
<---> Interchangeable
<-O-> Interchangeable with another part(s)
* Please place an order assy(*)

https://tractormanualz.com/

TD2-G317001

FRONT AXLE GROUP

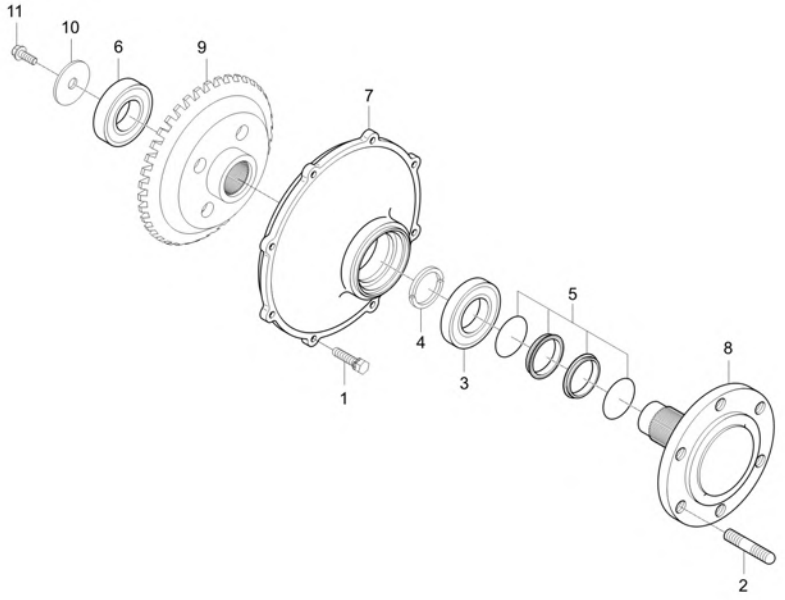

A : DK6010HSE

No.	Part Number	Description	Qty A	Qty B	Qty C	Qty D	Qty E	I.C	Remark
1	01123-50835	BOLT, WITH WASHER	16						M8X1.25
2	01517-51632	STUD v	4						M16*1.5*32
3	08101-06309	BALL BEARING v	2						#6309
4	T4340-43681	CIR-CLIP v	4						사각 5
5	T4520-43652	FLOATING SEAL ASS`Y v	2						
6	T4682-43731	BEARING,BALL v	2						
7	T4686-43622	COVER FRONT AXLE v	2						
8	T5521-33011	AXLE, FRONT	1						
8	T5521-33011	AXLE, FRONT	2					<------	
9	T5520-33051	GEAR,BEVEL 40	2						
10	T5520-33081	MOUNTING PLATE	2						
11	T8105-75770	BOLT, UBS	2						M8*P1.25

----> Old replace New
<---- New replace Old
<-X-> Not interchangeable
<---> Interchangeable
<-O-> Interchangeable with another part(s)
* Please place an order assy(*)

https://tractormanualz.com/

TD2-G321001

STEERING CYLINDER GROUP

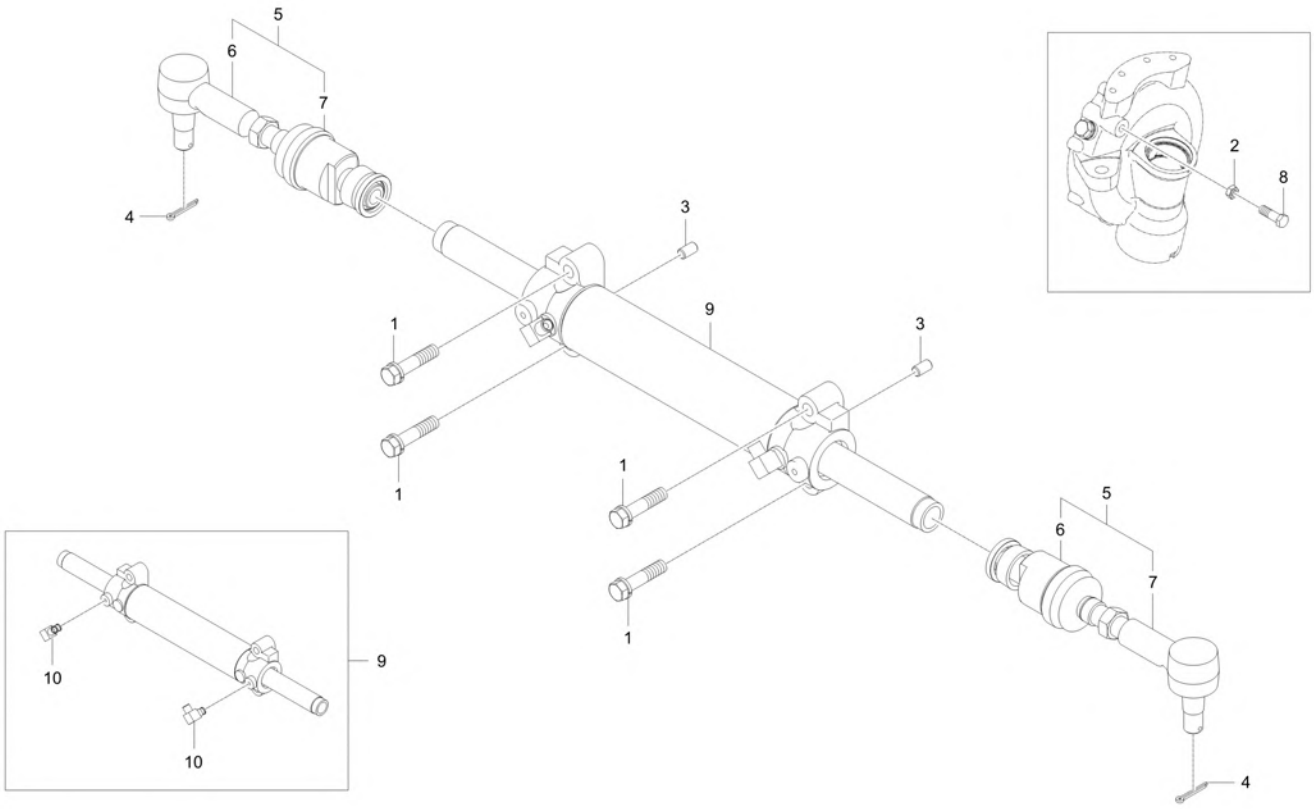

A : DK6010HSE

No.	Part Number	Description	Qty A	Qty B	Qty C	Qty D	Qty E	I.C	Remark
1	01133-51255	BOLT	4						
2	02076-50140	NUT	2						M14XP1.5
3	05012-01016	PIN, DOWEL	2						
4	05511-50335	PIN, SPLIT	2						DIA3*35
5	T4115-63603	BALL JOINT ASSY v	2						
6	T4115-63613	ASSY, RACK END v	1						
7	T4520-63625	TIE ROD ASSY v	1						
8	T4520-43941	BOLT,SET	2						
9	T5715-45201	CYLINDER ASSY	1						
10	T5715-45201012	ELBOW, PORT	1						

----> Old replace New
<----> Interchangeable
* Please place an order assy(*)
<---- New replace Old
<-O-> Interchangeable with another part(s)
<-X-> Not interchangeable

https://tractormanualz.com/

TD2-G322001

STEERING CYLINDER COVER GROUP

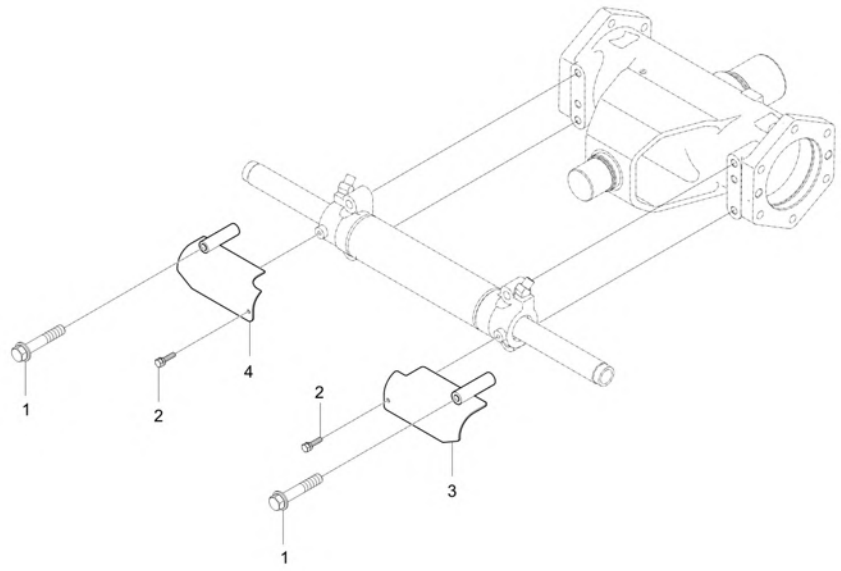

A : DK6010HSE

No.	Part Number	Description	Qty A	Qty B	Qty C	Qty D	Qty E	I.C	Remark
1	01133-51090	BOLT	2						P1.25
2	01754-50610	BOLT, FLANGE	2						M6XP1.0
3	T4115-31331BB	COVER, CYLINDER(LH)	1						
4	T4115-31341BB	COVER,CYLINDER(RH)	1						

----> Old replace New
<---> Interchangeable
* Please place an order assy(*)
<---- New replace Old
<-O-> Interchangeable with another part(s)
<-X-> Not interchangeable

https://tractormanualz.com/

TD2-G331001

PROPELLER SHAFT GROUP

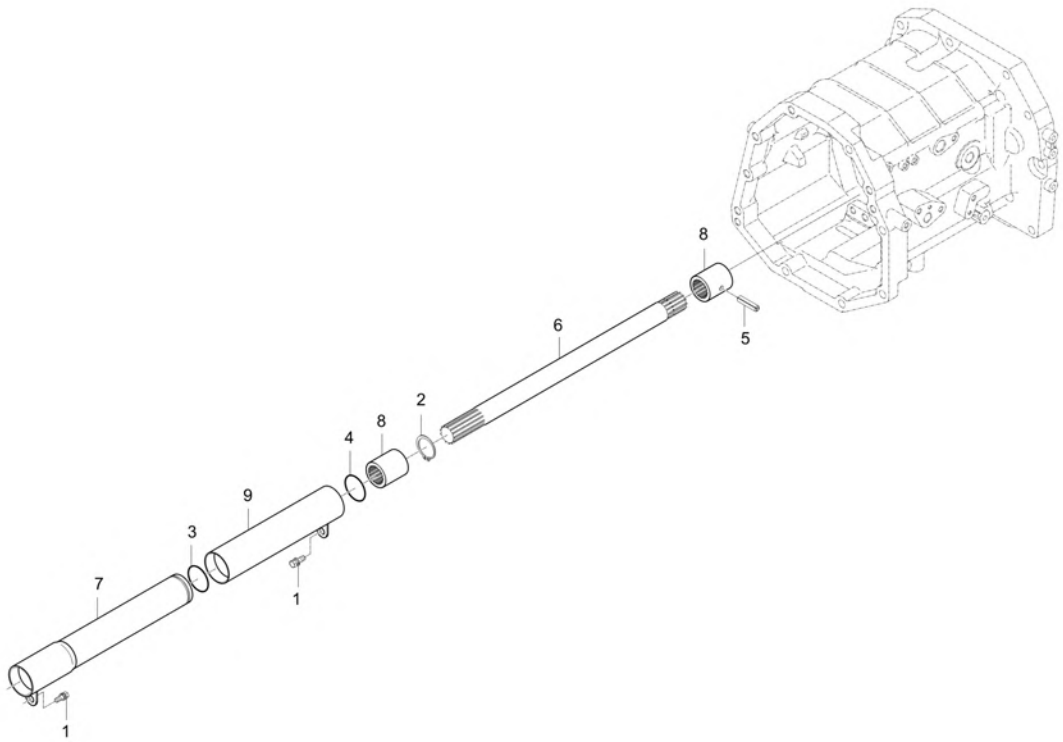

A : DK6010HSE

No.	Part Number	Description	Qty A	Qty B	Qty C	Qty D	Qty E	I.C	Remark
1	01123-50816	Hex Head Cap Screw	2						M8XP1.25
2	04612-00250	CIR-CLIP	1						
3	04811-06350	O RING	1						
4	04811-06420	O RING	1						
5	05411-00635	PIN, SPRING	1						DIA5*36
6	T2630-44581	SHAFT 2,PROPELLER	1						DIA25
7	T2630-44602	COVER 1, PROPELLER SHAFT	1						
8	T4620-44592	COUPLING	2						
9	T4681-44611	COVER 1,PROPELLER v	1						

----> Old replace New <---- New replace Old <-X-> Not interchangeable
<---> Interchangeable <-O-> Interchangeable with another part(s)
* Please place an order assy(*)

https://tractormanualz.com/

TD2-G341004

FRONT WHEEL GROUP

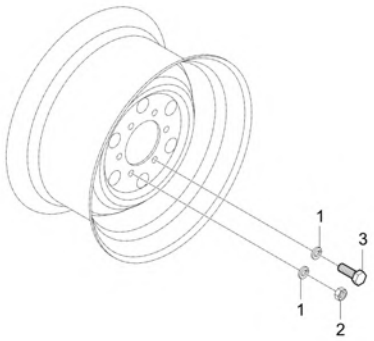

A : DK6010HSE

No.	Part Number	Description	Qty A	Qty B	Qty C	Qty D	Qty E	I.C	Remark
1	04512-50160	WASHER, SPRING	12						M16
2	02076-50160	NUT	4						
3	01073-51630	BOLT v	8						M16XP1.5

----> Old replace New
<---> Interchangeable
* Please place an order assy(*)
<---- New replace Old
<-O-> Interchangeable with another part(s)
<-X-> Not interchangeable

https://tractormanualz.com/

TD2-G411003

SUCTION LINE GROUP

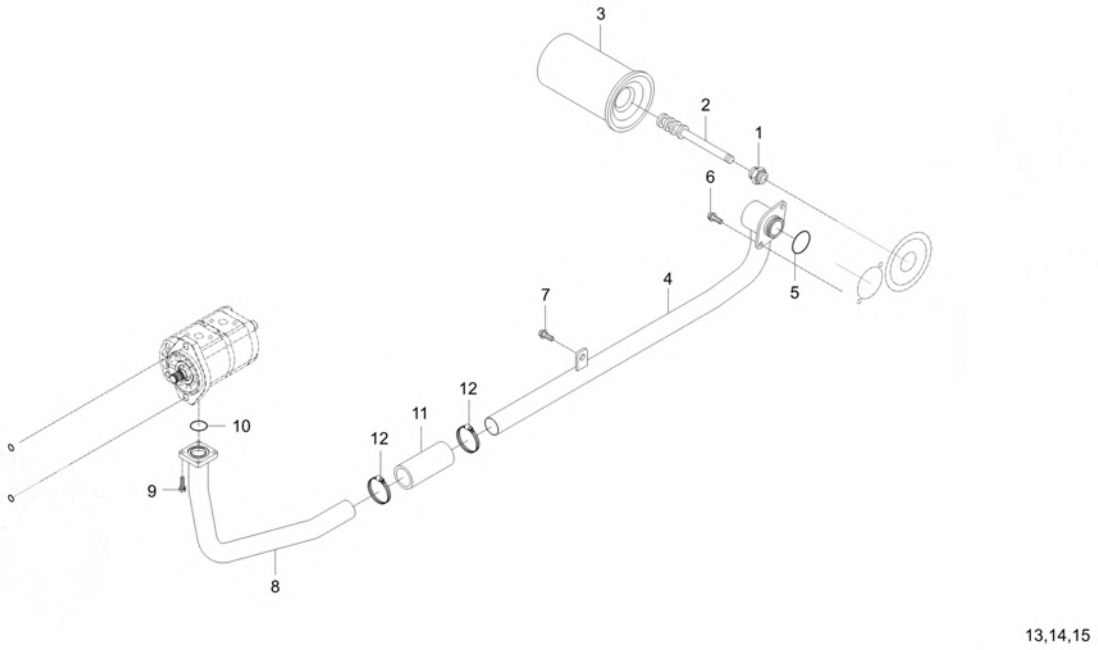

A : DK6010HSE

No.	Part Number	Description	Qty A	Qty B	Qty C	Qty D	Qty E	I.C	Remark
1	T4810-46762	JOINT CARTRIDGE	1						
2	T4810-46751	MAGNETIC ASS`Y	1						
3	T5710-38031	FILTER, HYD	1						100 micrometer
4	TD24-0036A	PIPE,SUCTION1	1						
5	04810-00320	O RING v	1						
6	01123-50820	BOLT, WASHER v	2						M8XP1.25
7	01127-50820	BOLT	1						
8	TD24-0038A	PIPE,SUCTION2	1						
9	01023-50620	BOLT, WASHER	4						M6XP1.0
10	04810-00280	O RING	1						
11	T4520-38151	HOSE, INLET	1						
12	CE11-0011A	CLAMP, HOSE STAINLESS 32-50	2						32-50mm
13	TD24-0157B	PLATE, INTERCEPTION	1						
14	02761-50060	NUT, FLANGE	1						M6XP1.0
15	01023-50616	BOLT, WASHER	1						M6*P1.0

----> Old replace New
<---- New replace Old
<-X-> Not interchangeable
<---> Interchangeable
<-O-> Interchangeable with another part(s)
* Please place an order assy(*)

https://tractormanualz.com/

TD2-G412003

GEAR PUMP GROUP

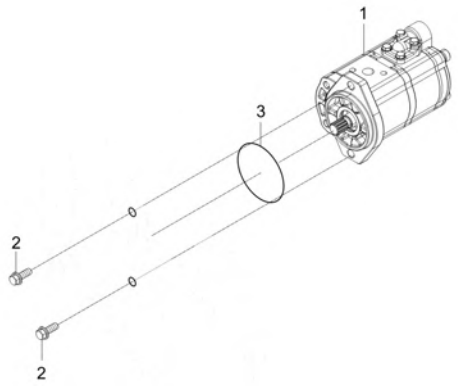

A : DK6010HSE

No.	Part Number	Description	Qty A	Qty B	Qty C	Qty D	Qty E	I.C	Remark
1	TD24-0181A	PUMP, GEAR	1						
2	01133-51030	WITH WASHER BOLT	2						M10XP1.25
3	04811-10800	O-RING	1						

----> Old replace New
<----> Interchangeable
* Please place an order assy(*)
<---- New replace Old
<-O-> Interchangeable with another part(s)
<-X-> Not interchangeable

https://tractormanualz.com/

TD2-G413003

COOLING SYSTEM GROUP

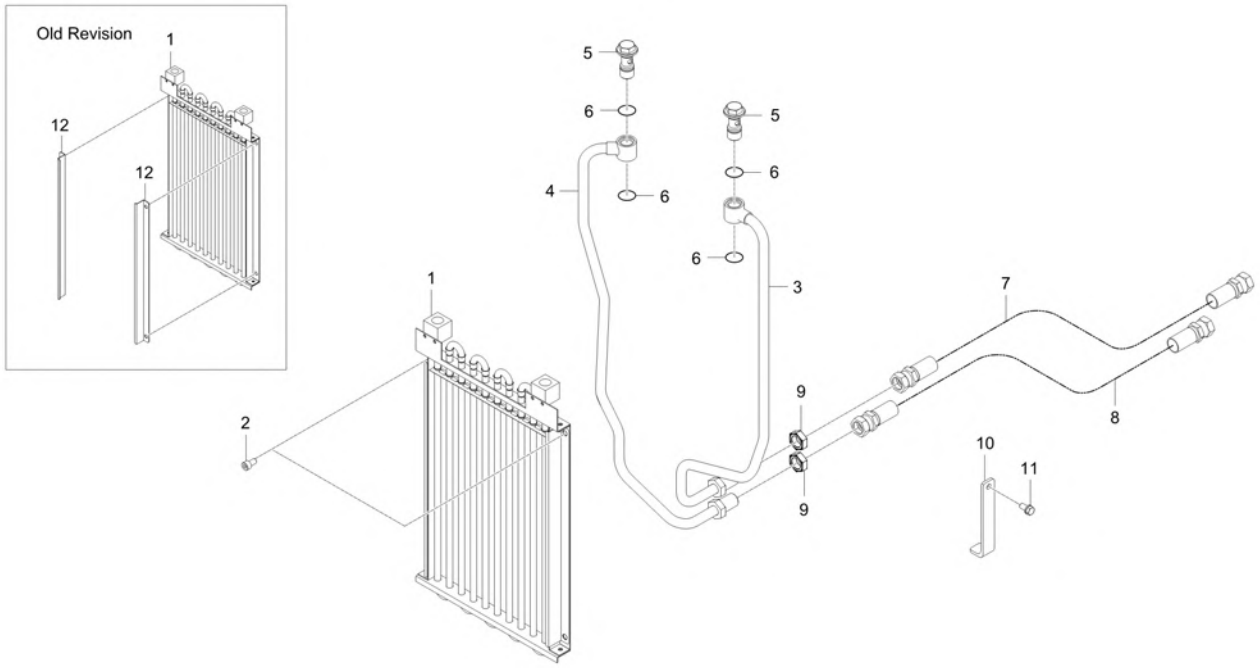

A : DK6010HSE

No.	Part Number	Description	Qty A	Qty B	Qty C	Qty D	Qty E	I.C	Remark
1	TD24-0151A	COOLER,OIL	1						
1	TD24-0151B	COOLER, OIL	1 VGG700017 ~ WGG700024					<--O-->	
2	TD24-0198A	BOLT HEXAGON SOCKET	4						
3	TD24-0049A	PIPE,COOLINGA	1						
4	TD24-0050B	PIPE, COOLING B	1						
5	T4620-37092	JOINT BOLT v	2						
5	TC24-0238A	BOLT, JOINT	2					<----->	
6	04810-00200	O RING v	4						
6	04817-00200	O RING	4					<----->	DIA19.8
7	TD24-0051A	HOSE,COOLINGA	1						
8	TD24-0052A	HOSE,COOLINGB	1						
9	TD24-0073A	NUT	2						
10	TD24-0074A	BRACKET,HYDHOSE	1						
11	01123-50816	Hex Head Cap Screw	1						M8XP1.25
12	TD24-0188A	COVER, OIL COOLER-A	2						
12	TD24-0188B	COVER, OIL COOLER-A	2 UGG700001 ~ VGG700016					<----->	

----> Old replace New
<---- New replace Old
<-X-> Not interchangeable
<---> Interchangeable
<-O-> Interchangeable with another part(s)
* Please place an order assy(*)

https://tractormanualz.com/

TD2-G421009

MODULATE VALVE GROUP

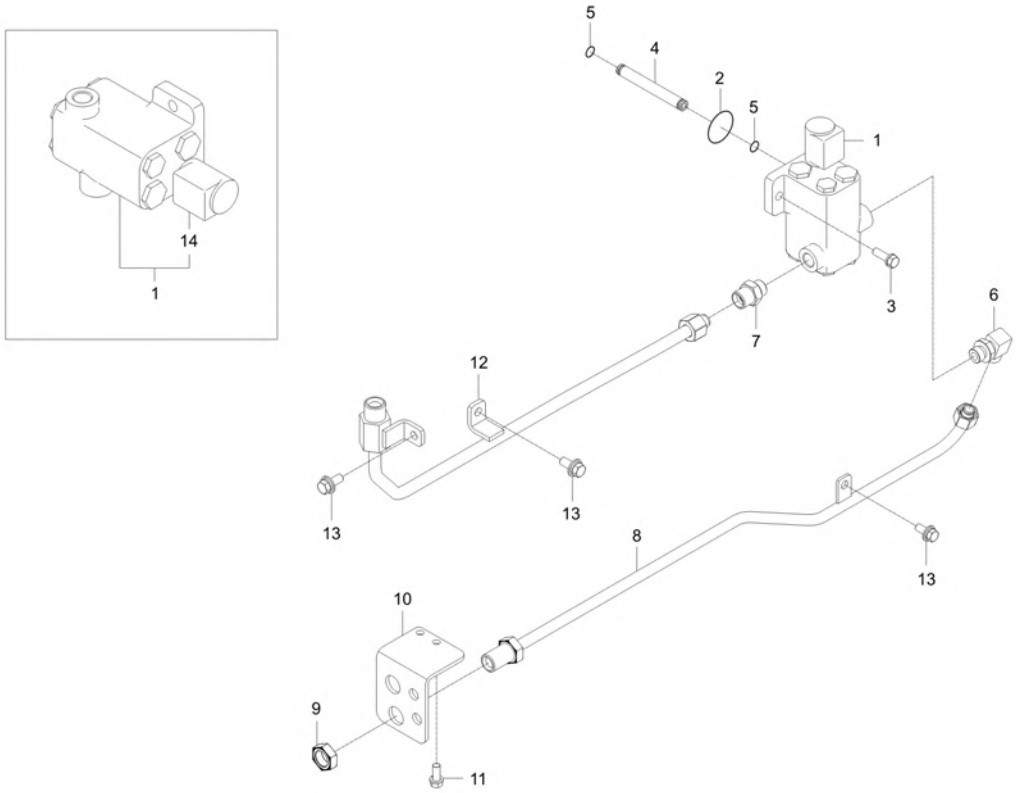

A : DK6010HSE

No.	Part Number	Description	Qty A	Qty B	Qty C	Qty D	Qty E	I.C	Remark
1	T4180-34041	ASS'Y, MOD. VALVE	1						
2	04811-50350	O RING	1						
3	01123-50825	BOLT WITH WASHER	3						M8XP1.25
4	TD24-0075A	PIPE,CONNECTING-P	1						
5	04811-00090	O RING	2						
6	T4810-45761	ELBOW	1						
7	T4810-47131	CONNECTOR v	1						
8	TD24-0045B	PIPE,COOLING1	1						
9	TD24-0073A	NUT	1						
10	TD24-0056A	BRACKET,COOLINGTUBE	1						
11	01123-50820	BOLT, WASHER v	2						M8XP1.25
12	TD24-0115B	PIPE,STEERING T	1						
13	01125-50820	BOLT, WASHER	3						M8XP1.25
14	M301260	SOLENOID COIL (PTO)	1						

----> Old replace New <---- New replace Old <-X-> Not interchangeable
<---> Interchangeable <-O-> Interchangeable with another part(s)
* Please place an order assy(*)

https://tractormanualz.com/

TD2-G422001

HST ASSY GROUP

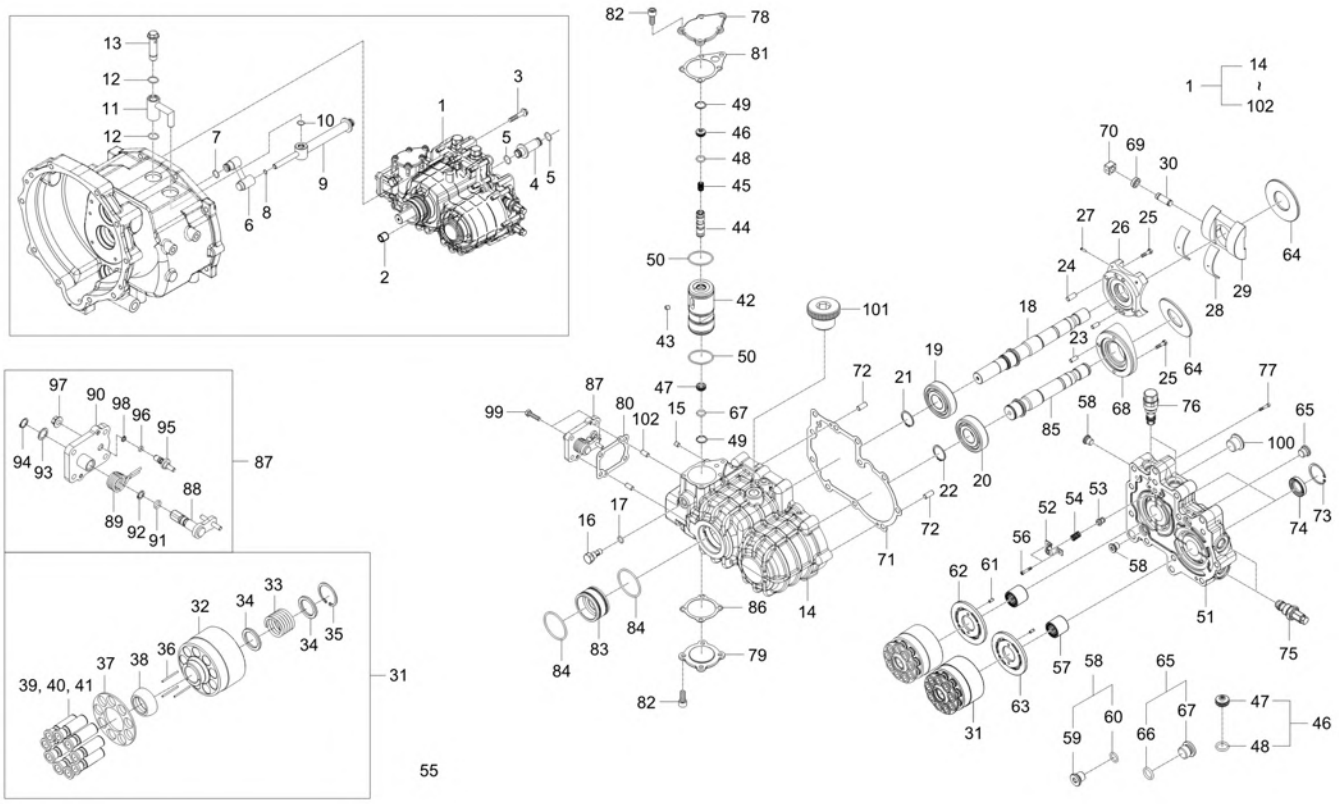

A : DK6010HSE

No.	Part Number	Description	Qty A	Qty B	Qty C	Qty D	Qty E	I.C	Remark
1	TD24-0103B	TRK HST-ASSY	1						
1	TD24-0103C	HST-ASSY	1					<------	
2	T4520-43191	PIN v	1						
3	T4125-31051	BOLT,UBS v	4						
4	T4125-31063	TUBE, HST INLET v	1						
5	04811-05170	O RING v	3						DIA16.8
6	T4125-37062	TUBE v	1						
7	04811-00160	O RING	1						DIA15.8
8	04811-10120	O RING v	1						DIA11.5
9	T4125-37072	TUBE v	1						
10	04811-00150	O RING v	2						DIA14.8
11	T4125-37082	TUBE v	1						
12	04810-00200	O RING v	2						DIA19.8
12	04817-00200	O RING	2					<----->	DIA19.8
13	T4520-37372	BOLT 2, JOINT v	1						M18*1.5
13	TD24-0254A	BOLT,JOINT2	1					<----->	M18*1.5
14	H070-500	CASE, HST	1						
15	K07-018	PLUG	1						PT1/8

----> Old replace New <---- New replace Old <-X-> Not interchangeable
<---> Interchangeable <-O-> Interchangeable with another part(s)
* Please place an order assy(*)

https://tractormanualz.com/

TD2-G422001

HST ASSY GROUP

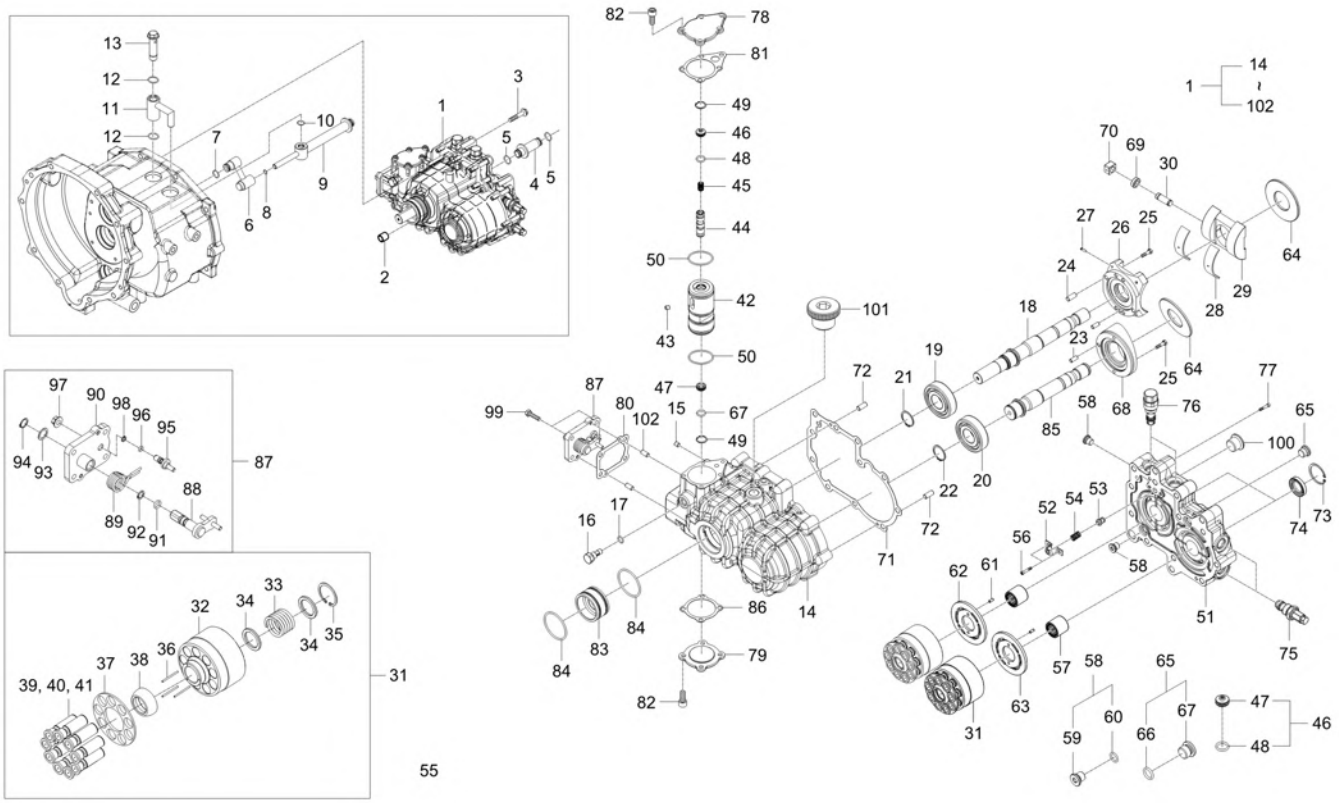

A : DK6010HSE

No.	Part Number	Description	Qty A	Qty B	Qty C	Qty D	Qty E	I.C	Remark
16	H006-221	PLUG	1						PF1/4
17	K06-040	O RING	1						BP11
18	H006-209-B	SHAFT P	1						
19	K01-012	BALL BEARING	1						
20	K01-012	BALL BEARING	1						
21	K11-014	RING, SNAP	1						S30
22	K11-014	RING, SNAP	1						S30
23	H006-211	PIN	2						DIA6 x 12L
24	H017-216	PIN	2						DIA8x18L
25	K02-016	LENCH BOLT	4						M6x20L
26	H017-508-B	GUIDE-SWASH	1						
27	H006-254	SPRING, PIN	4						
28	H017-530	BEARING	2						
29	H017-507-A	PLATE P	1						
30	H006-213	PIN	1						
31	ASH017-030	ROTARY-ASSY	2						
32	H006-200-B	CYLINDER BLOCK	1						
33	H006-201	SPRING	1						

----> Old replace New <---- New replace Old <-X-> Not interchangeable
<---> Interchangeable <-O-> Interchangeable with another part(s)
* Please place an order assy(*)

https://tractormanualz.com/

TD2-G422001

HST ASSY GROUP

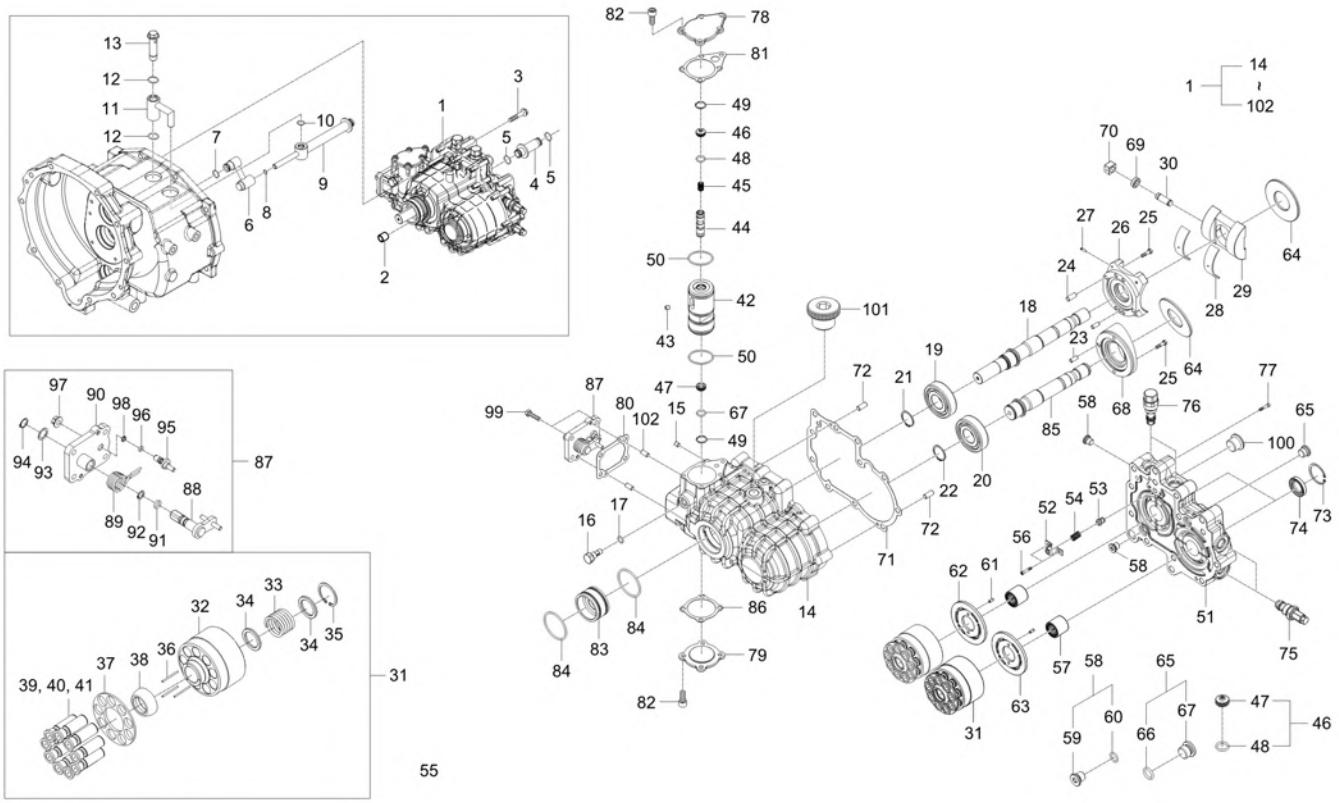

A : DK6010HSE

No.	Part Number	Description	Qty A	Qty B	Qty C	Qty D	Qty E	I.C	Remark
34	H006-500	SPRING SEAT	2						
35	K11-017	RING, SNAP	1						R37
36	H006-202	PIN	3						DIA2.2 x 33.05L
37	H006-203-A	RETAINER	1						
38	H006-204-A	BALL GUIDE	1						
39	H006-101-B	PISTON	9						
40	H006-205-B	PISTON	9						
41	H006-206-A	SHOE	9						
42	H017-233-A	PISTON	1						
43	K16-001	EXPANDER	2						DIA5
44	H070-208	SPOOL-SER	1						
45	H006-245	SPRING	1						
46	H006-109	SEAT, SPRING-ASSY	2						
47	H006-246	SEAT,SPRING	1						
48	K06-043	O-RING v	1						BP14
49	K11-007	RING, SNAP	2						R20
50	K04-030	GLYD RING	2						YGR055-3.7
51	H070-509	VALVE-BLOCK	1						

----> Old replace New <---- New replace Old <-X-> Not interchangeable
<---> Interchangeable <-O-> Interchangeable with another part(s)
* Please place an order assy(*)

https://tractormanualz.com/

TD2-G422001

HST ASSY GROUP

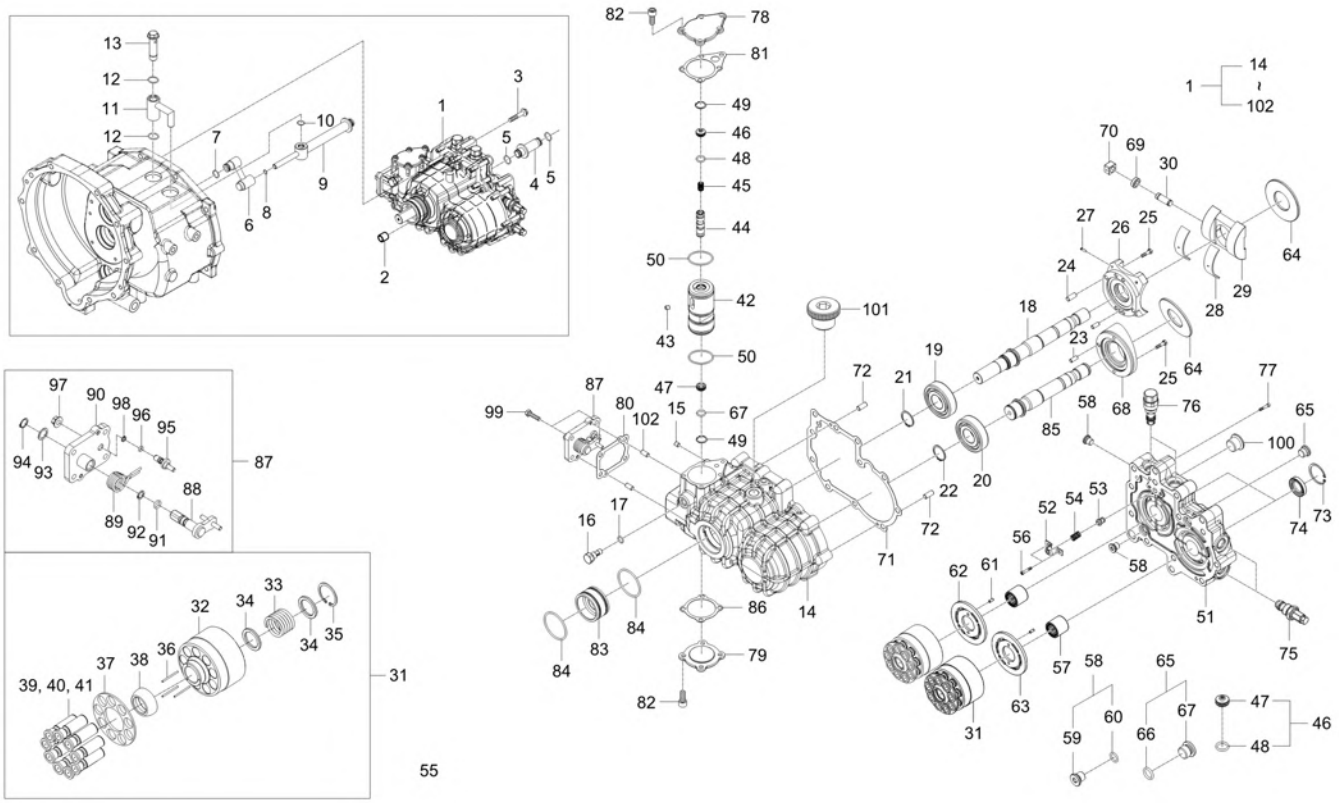

A : DK6010HSE

No.	Part Number	Description	Qty A	Qty B	Qty C	Qty D	Qty E	I.C	Remark
52	H001-506	SPRING HOLDER	1						
53	H006-223	CHECK	1						
54	H009-2281	SPRING	1						
55	H070-229	WASHER, SPRING	2						
56	K02-061	LENCH BOLT	2						M6x25L
57	K01-027	BEARING, NIDDLE	2						HMK2530
58	H006-108	PLUG-ASSY	3						
59	H006-242	PLUG	1						PF1/4
60	K06-040	O RING	1						BP11
61	H001-219	PIN	2						DIA4x10L
62	H070-207	VALVE-PLATE_P	1						
63	H006-208-B	VALVE-PLATE_M	1						
64	H006-216-A	SHOE PLATE	2						
65	H001-104	PLUG	2						PF3/8
66	H001-220	PLUG	1						
67	K06-043	O-RING v	1						BP14
68	H006-505	PLATE M	1						
69	H006-214	GUIDE	1						

----> Old replace New <---- New replace Old <-X-> Not interchangeable
<---> Interchangeable <-O-> Interchangeable with another part(s)
* Please place an order assy(*)

https://tractormanualz.com/

TD2-G422001

HST ASSY GROUP

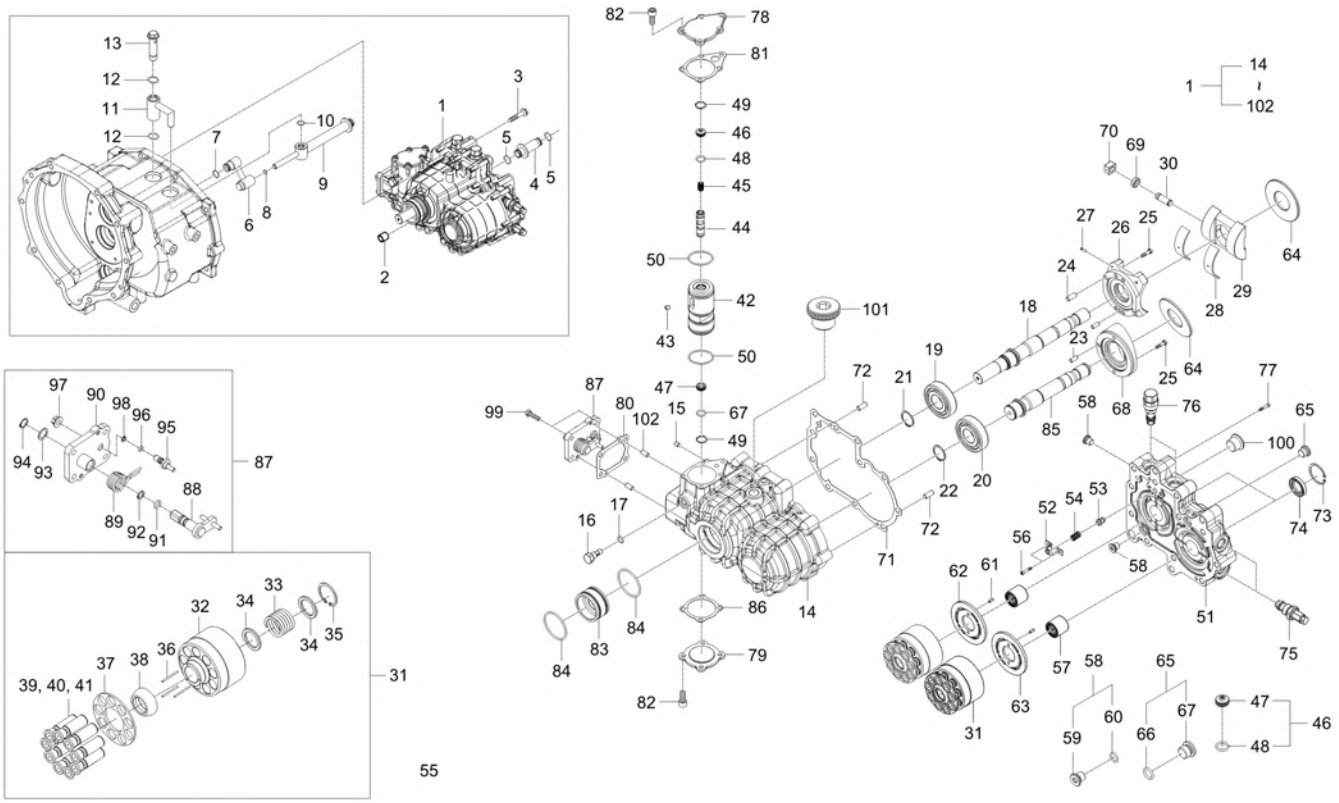

A : DK6010HSE

No.	Part Number	Description	Qty A	Qty B	Qty C	Qty D	Qty E	I.C	Remark
70	H006-215-A	DOG	1						
71	H006-217-A	GASKET NX HST	1						
72	H001-215	PIN	2						DIA6x14L
73	K11-018	SNAP RING	2						R42
74	K04-017	OIL SEAL obs v	2						DIA25xDIA40x70L
75	H017-104-A	NEUTRAL V/V ASSY	2						Orifice DIA1.2
76	H006-104	VALVE, RELIEF-ASSY	2						
77	K02-006	LENCH BOLT	11						M10x50L
78	H017-531	COVER A	1						
79	H070-510	COVER-B	1						
80	H070-206	GASKET-L	1						
81	H017-234-A	GASKET-A	1						
82	K02-078	BOLT	9						M8x20L
83	H006-222	COVER	1						
84	K06-057	O RING v	2						G55
85	H006-210-A	SHAFT M	1						
86	H017-235-A	GASKET-B	1						
87	ASH070-030	LEVER-ASSY	1						

----> Old replace New
<----> Interchangeable
* Please place an order assy(*)
<---- New replace Old
<-O-> Interchangeable with another part(s)
<-X-> Not interchangeable

https://tractormanualz.com/

TD2-G422001

HST ASSY GROUP

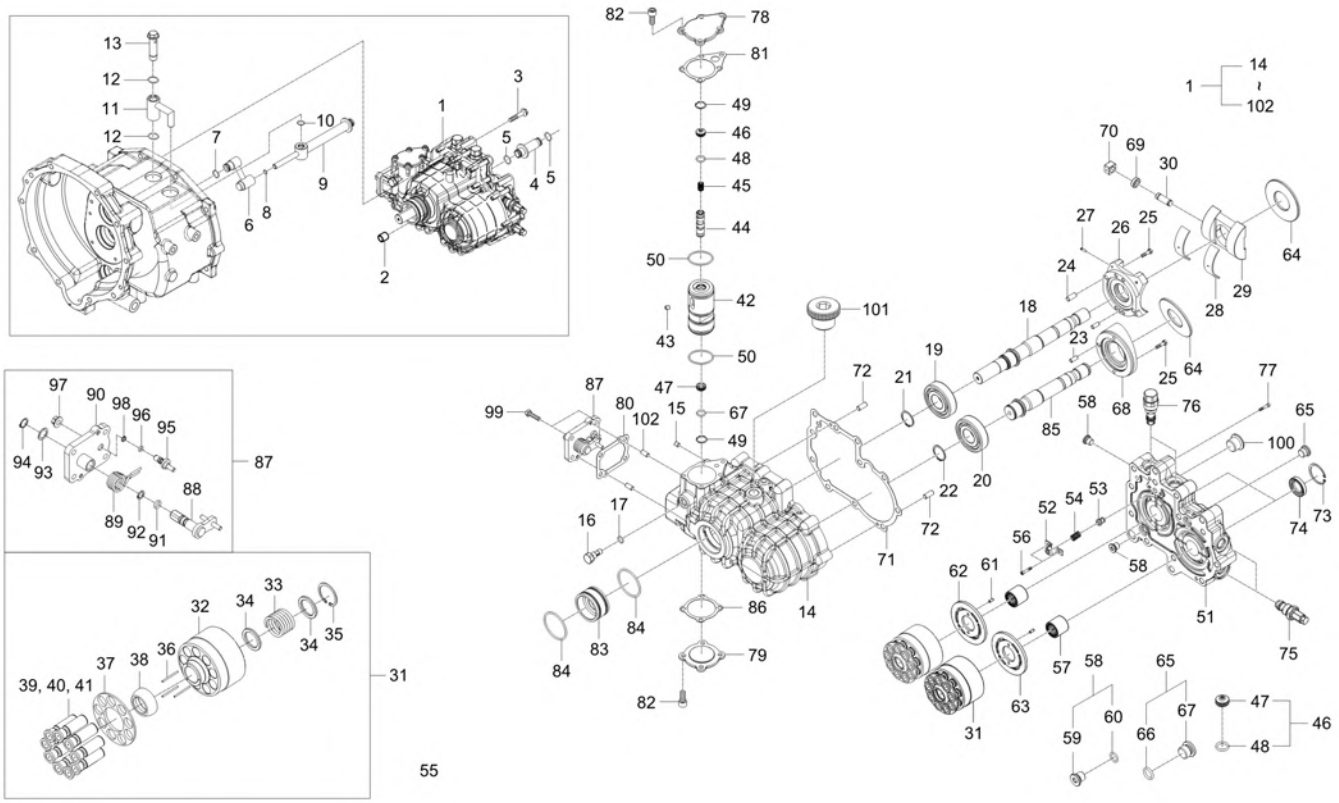

A : DK6010HSE

No.	Part Number	Description	Qty A	Qty B	Qty C	Qty D	Qty E	I.C	Remark
88	H006-106	LEVER-ASSY	1						
89	H070-214	SPRING-TOR	1						
90	H006-510	COVER-L	1						
91	K06-005	O RING	1						
92	K03-006	RING, BACK UP	1						
93	H006-511	SPACER	1						
94	K11-003	RING, SNAP	1						
95	H006-252	PIN, FULCRUM	1						
96	K06-051	O RING	1						
97	K05-011	NUT-FLANGE	1						
98	K03-012	RING, BACK UP	1						
99	K02-017	BOLT, WRENCH	4						
100	K15-003	CAP obs v	1						DIA20
101	K07-007	PLUG	1						M18x1.5P
102	H006-247	PIN	1						

----> Old replace New
<----> Interchangeable
* Please place an order assy(*)
<---- New replace Old
<-O-> Interchangeable with another part(s)
<-X-> Not interchangeable

https://tractormanualz.com/

TD2-G423001

HST HYDRAULIC LINE GROUP

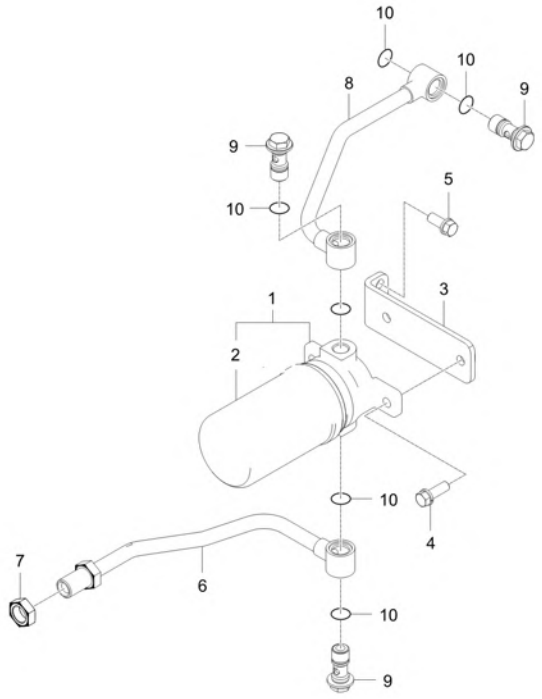

A : DK6010HSE

No.	Part Number	Description	Qty A	Qty B	Qty C	Qty D	Qty E	I.C	Remark
1	T4125-38123	FILTER, ASSY HYD	1						
2	T4125-38021	FILTER, HST HYD	1						
3	TD24-0048A	BRACKET,FILTERHST	1						
4	01133-51030	WITH WASHER BOLT	2						M10XP1.25
5	01133-51025	BOLT	2						M10XP1.25
6	TD24-0047A	PIPE,COOLINGF	1						
7	TD24-0073A	NUT	1						
8	TD24-0046A	TUBE,HSTCHARGEINLET	1						
9	T4620-37092	JOINT BOLT v	3						
9	TC24-0238A	BOLT, JOINT	3					<----->	
10	04810-00200	O RING v	6						
10	04817-00200	O RING	6					<----->	DIA19.8

----> Old replace New
<---- New replace Old
<-X-> Not interchangeable
<---> Interchangeable
<-O-> Interchangeable with another part(s)
* Please place an order assy(*)

https://tractormanualz.com/

TD2-G431003 POWER STEERING UNIT GROUP

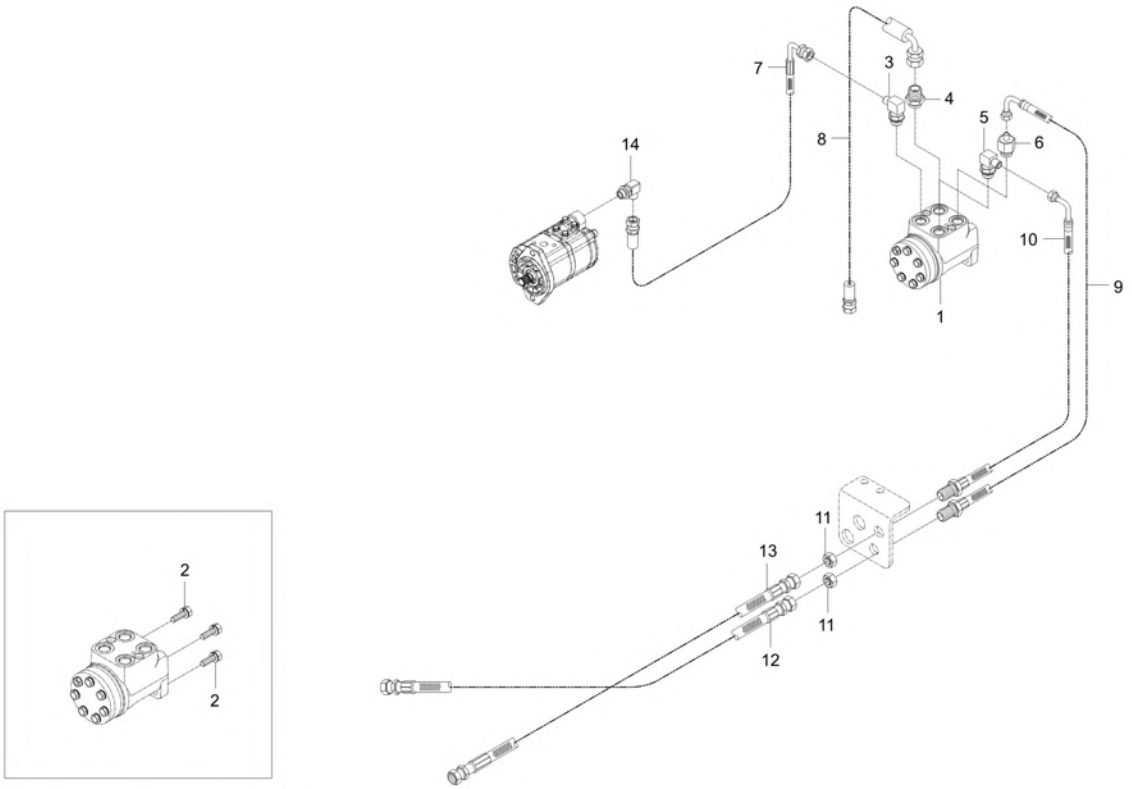

A : DK6010HSE

No.	Part Number	Description	Qty A	Qty B	Qty C	Qty D	Qty E	I.C	Remark
1	TF14-0031A	UNIT,POWERSTEERING	1						100cc/rev
2	01123-51025	BOLT	4						M10X1.5
3	T4930-45781	ELBOW	1						
4	T4931-45781	CONNECTOR	1						
5	T4930-45681	ELBOW	1						PF1/4, 3/4-16UNF
6	TD24-0120A	CONNECTOR	1						
7	TD24-0105A	HOSE,STEERING-P	1						
8	TD24-0109A	HOSE,STEERING T	1						
9	TD24-0113A	HOSE,STEERING L	1						
10	TD24-0111A	HOSE,STEERING R	1						
11	T4930-47091	NUT	2						-
12	TD24-0082A	HOSE,STEERING-L1	1						
13	TD24-0084A	HOSE,STEERING-R1	1						
14	T4935-45781	ELBOW v	1						

----> Old replace New <---- New replace Old <-X-> Not interchangeable
<---> Interchangeable <-O-> Interchangeable with another part(s)
* Please place an order assy(*)

https://tractormanualz.com/

TD2-G442007

EXTERNAL DRAW VALVE GROUP

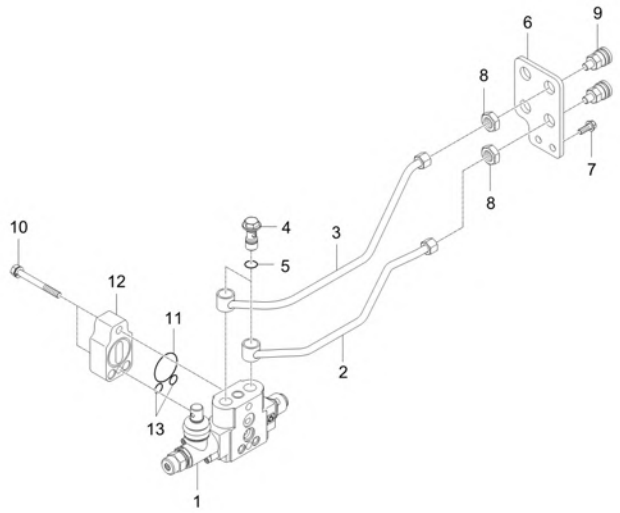

A : DK6010HSE

No.	Part Number	Description	Qty A	Qty B	Qty C	Qty D	Qty E	I.C	Remark
1	T5710-39031	DETENTDOUBLEV/V	1						
2	T5710-35111	TUBE	1						
3	T5710-35121	TUBE	1						
4	T4620-37092	JOINT BOLT v	2						
4	TC24-0238A	BOLT, JOINT	2					<----->	
5	04816-00200	O RING	4						DIA19.8
5	04817-00200	O RING	4					<----->	DIA19.8
6	T5710-35101	SUPPORT	1						T6
7	01133-51025	BOLT	2						M10XP1.25
8	T4930-47071	NUT	2						M18XP1.5
9	T5710-30091	COUPLER,SELF-SEALING,AC,1-1-4 v	2						
9	TD24-0159A	COUPLER, QUICK	2					<----->	
10	01133-51080	BOLT v	2						M10XP1.25
11	04816-00100	O_RING	2						DIA9.8
12	T2610-37482	COVER v	1						
13	04811-10380	O-RING	1						

----> Old replace New <---- New replace Old <-X-> Not interchangeable
<---> Interchangeable <-O-> Interchangeable with another part(s)
* Please place an order assy(*)

https://tractormanualz.com/

TD2-G443005

HYDRAULIC BLOCK GROUP

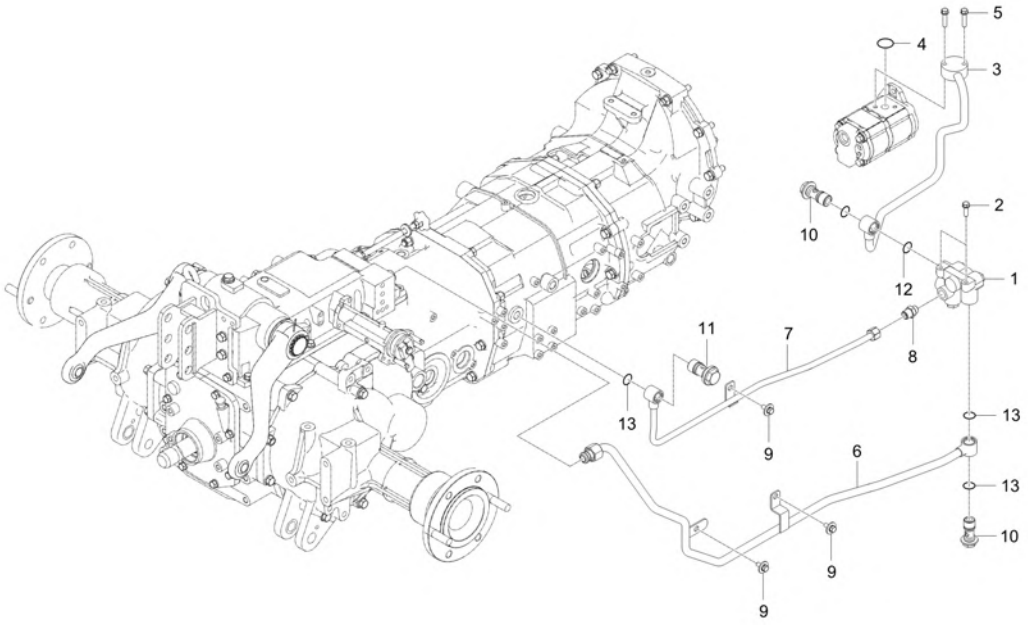

A : DK6010HSE

No.	Part Number	Description	Qty A	Qty B	Qty C	Qty D	Qty E	I.C	Remark
1	T5710-36601	ASSY,HYD.BLOCK	1						
2	01123-50825	BOLT WITH WASHER	2						M8XP1.25
3	TD24-0202A	TUBE, HYD-J1	1						
4	04816-00220	O_RING dnr v	1						DIA21.8
4	04817-00220	O RING	1					<----->	DIA21.8
5	01123-50835	BOLT, WITH WASHER	2						M8X1.25
6	TD24-0067A	PIPE, HYD-J2	1						
7	TD24-0069A	TUBE,AUTO RETURN	1						
8	T4810-47131	CONNECTOR v	1						
9	01127-50820	BOLT	3						
10	T4835-46591	BOLT, JOINT	2						
10	TD24-0253A	BOLT, JOINT	2					<----->	
11	T4620-37092	JOINT BOLT v	1						
11	TC24-0238A	BOLT, JOINT	1					<----->	
12	04816-00220	O_RING dnr v	4						DIA21.8
12	04817-00220	O RING	4					<----->	DIA21.8
13	04816-00200	O RING	2						DIA19.8
13	04817-00220	O RING	2					<----->	DIA21.8

----> Old replace New <---- New replace Old <-X-> Not interchangeable
<---> Interchangeable <-O-> Interchangeable with another part(s)
* Please place an order assy(*)

https://tractormanualz.com/

TD2-G461001

LIFT CONTROL VALVE(MEC) GROUP

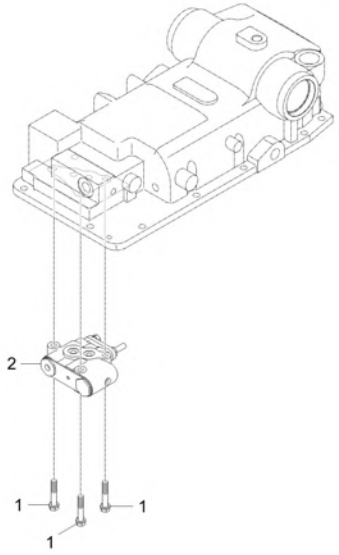

A : DK6010HSE

No.	Part Number	Description	Qty A	Qty B	Qty C	Qty D	Qty E	I.C	Remark
1	01123-50845	BOLT, WASHER v	3						M8*P1.25
2	T5710-37302	VALVE v	1						

----> Old replace New
<----> Interchangeable
* Please place an order assy(*)
<---- New replace Old
<-O-> Interchangeable with another part(s)
<-X-> Not interchangeable

https://tractormanualz.com/

TD2-G463003

HYDRAULIC CYLINDER GROUP

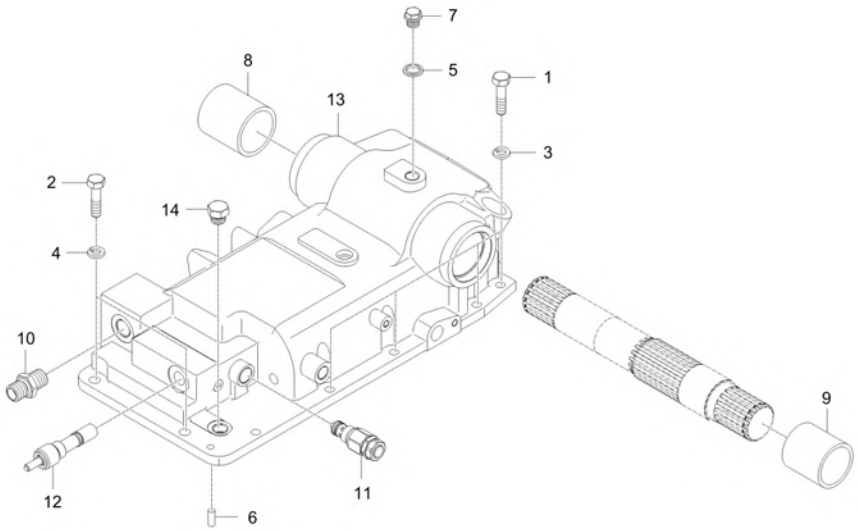

A : DK6010HSE

No.	Part Number	Description	Qty A	Qty B	Qty C	Qty D	Qty E	I.C	Remark
1	01176-51030	BOLT	8						
2	01176-51232	BOLT obs v	3						M12*P1.25*32
3	04512-50100	SPRING WASHER	8						M10
4	04512-50120	SPRING WASHER	3						M12
5	04717-01600	WASHER, SEAL	1						
6	05012-00820	PIN, PARALLEL	1						DIA8*20
7	06331-45016	PLUG M16 P 1.25	1						M16P1.5
8	08511-04550	BUSH	1						
9	08511-05050	BUSH	1						
10	T4935-46941	CONNECTION	1						UNS1-14
11	T5210-37311	ASSY, RELIEF VALVE	1						
12	T5710-37441	FLOWCONTROL VALVE	1						
13	T5715-37116	BODY, POWERLIFT	1						
13	T5715-37117	BODY, POWERLIFT	1					<------	
14	TG14-0137A	PLUG	1						

----> Old replace New
<---- New replace Old
<-X-> Not interchangeable
<---> Interchangeable
<-O-> Interchangeable with another part(s)
* Please place an order assy(*)

https://tractormanualz.com/

TD2-G463501

HYDRAULIC CYLINDER GROUP

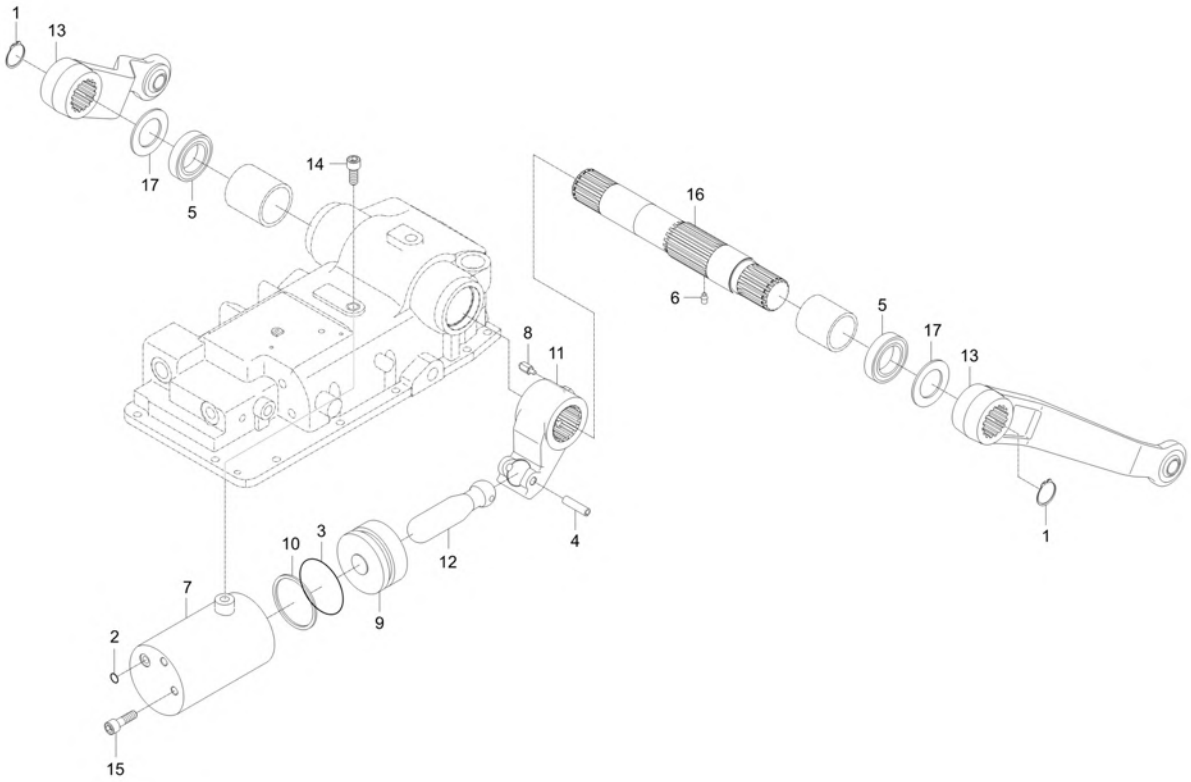

A : DK6010HSE

No.	Part Number	Description	Qty A	Qty B	Qty C	Qty D	Qty E	I.C	Remark
1	04612-00450	RING,SNAP	2						
2	04810-00140	O RING	1						P14
3	TD24-0125A	ORING	1						D75
4	05411-00850	PIN,SPRING	1						8*50
5	09500-45609	SEAL,OIL	2						
6	T2610-37453	SCREW, SET	1						M10*P1.5
7	T5710-37132	CYLINDER	1						
8	T5710-37181	ROADPIN	1						
9	T5710-37212	PISTON	1						
10	T5710-37222	BACK-UP RING	1						
11	T5710-37231	CRANK	1						
12	T5710-37241	CONNECTING ROD	1						
13	T5710-37281	ASS'Y, LIFT ARM	2						
14	T5710-37511	BOLT, HEXAGON SOCKET	1						
15	T5710-37521	BOLT, HEXAGON SOCKET	1						
16	TC24-0164A	ARM SHAFT	1						
17	TD24-0008A	WASHER	2						

----> Old replace New
<---- New replace Old
<-X-> Not interchangeable
<---> Interchangeable
<-O-> Interchangeable with another part(s)
* Please place an order assy(*)

https://tractormanualz.com/

TD2-G464001

HYDRAULIC CYLINDER GROUP

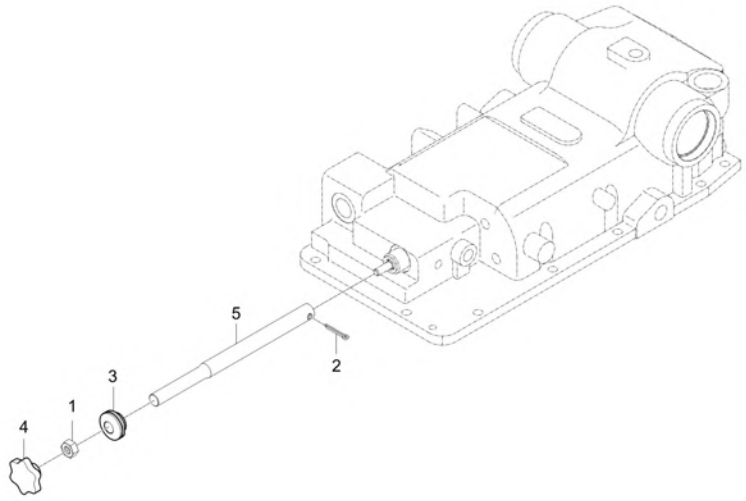

A : DK6010HSE

No.	Part Number	Description	Qty A	Qty B	Qty C	Qty D	Qty E	I.C	Remark
1	02176-50100	NUT v	1						M10XP1.25
2	05511-50420	PIN, SPLIT	1						DIA4*20
3	31355-2949-1	GROMMET	1						
4	T2610-39882	GRIP	1						
5	T5710-38131	ROD	1						DIA12

----> Old replace New
<----> Interchangeable
* Please place an order assy(*)
<---- New replace Old
<-O-> Interchangeable with another part(s)
<-X-> Not interchangeable

https://tractormanualz.com/

TD2-G464502

TOP LINK DEVICE GROUP

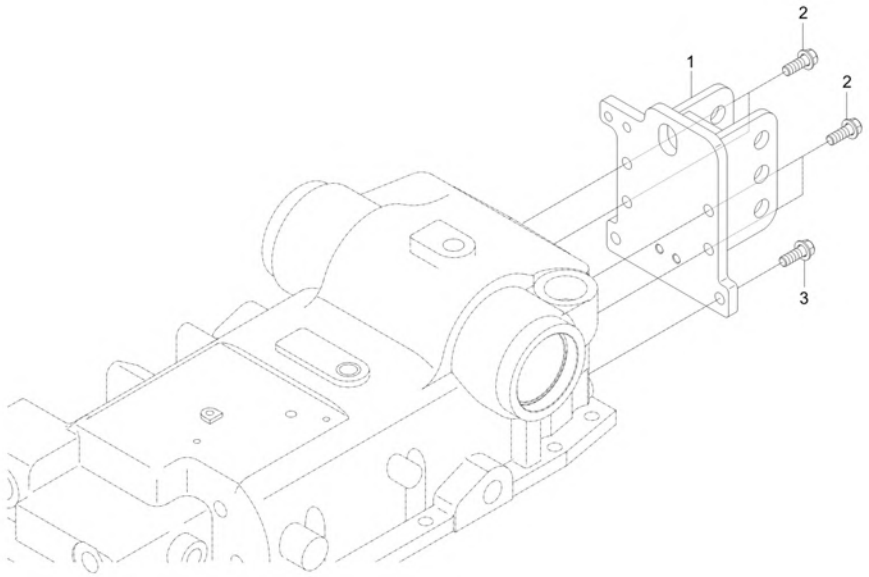

A : DK6010HSE

No.	Part Number	Description	Qty A	Qty B	Qty C	Qty D	Qty E	I.C	Remark
1	T5715-38802	BRACKET, TOP LINK	1						
2	01133-51225	BOLT, WASHER v	4						M12*P1.25
3	01133-51025	BOLT	2						M10XP1.25

----> Old replace New
<----> Interchangeable
* Please place an order assy(*)
<---- New replace Old
<-O-> Interchangeable with another part(s)
<-X-> Not interchangeable

https://tractormanualz.com/

TD2-G465001

OIL INLET TUBE GROUP

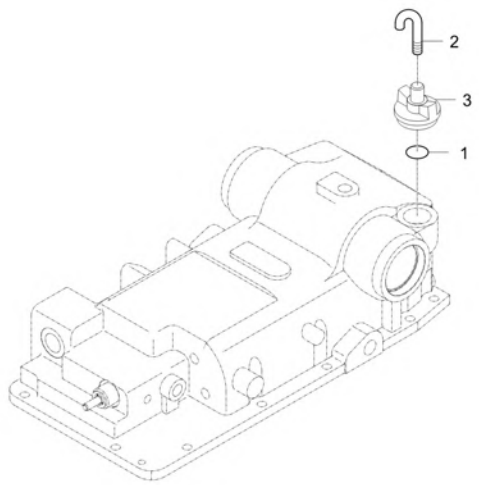

A : DK6010HSE

No.	Part Number	Description	Qty A	Qty B	Qty C	Qty D	Qty E	I.C	Remark
1	04811-50300	O RING v	1						G30
2	31351-3714-2	BREATHER 2	1						N
3	38245-2142-1	AIR BREATHER	1						

----> Old replace New
<---- New replace Old
<-X-> Not interchangeable
<---> Interchangeable
<-O-> Interchangeable with another part(s)
* Please place an order assy(*)

https://tractormanualz.com/

TD2-G465502

HYDRAULIC SYSTEM GROUP(1)

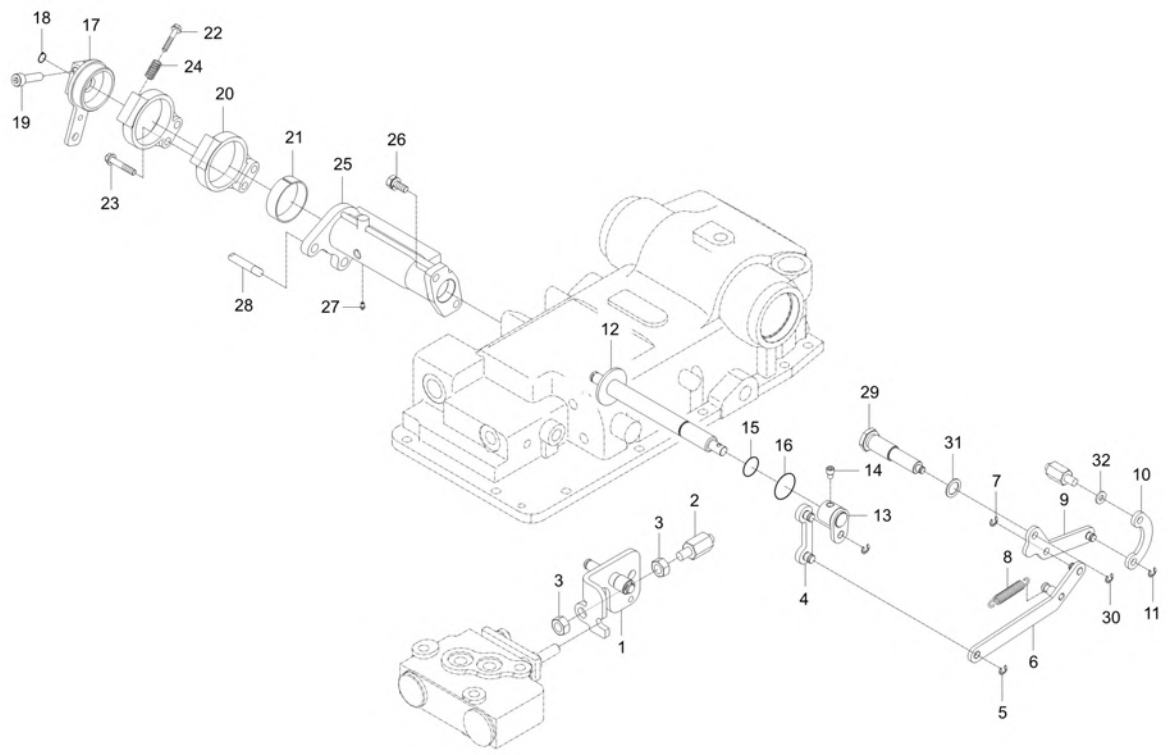

A : DK6010HSE

No.	Part Number	Description	Qty A	Qty B	Qty C	Qty D	Qty E	I.C	Remark
1	T5715-37562	PUSH PLATE ASSY B	1						
2	T5710-37571	PIN	1						
3	02156-50080	NUT v	2						M8XP1.25
4	T5710-32601	LINK	1						
5	04613-50060	RING SNAP	2						
6	T5710-32101	LINK	1						
7	04613-50060	RING SNAP	1						
8	T2305-26641	SPRING, DIFF.LOCK PEDAL	1						DIA1.2
9	T5710-32511	LINK	1						
10	TD24-0001A	LINK,FEEDBACK-A	1						T4.5
11	04613-50060	RING SNAP	2						
12	T5715-32401	POSITION CONTROL SHAFT B	1						
13	T5710-39701	POSITION CONTROL LEVER ARM	1						
14	T2610-39572	SCREW, SET	1						M8*P1.25
15	04811-00210	O RING	1						
16	04811-00250	O RING	1						
17	T5710-39202	LEVER	1						
18	04612-00160	SNAP RING v	1						

----> Old replace New <---- New replace Old <-X-> Not interchangeable
<---> Interchangeable <-O-> Interchangeable with another part(s)
* Please place an order assy(*)

https://tractormanualz.com/

TD2-G465502

HYDRAULIC SYSTEM GROUP(1)

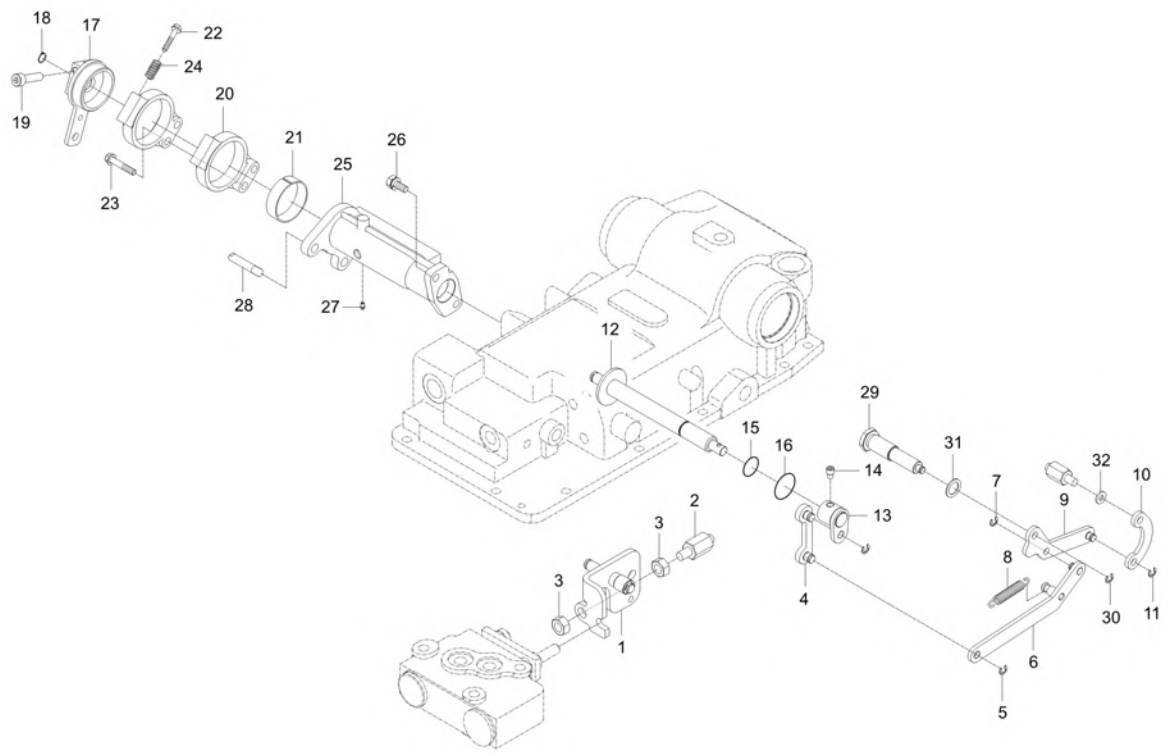

A : DK6010HSE

No.	Part Number	Description	Qty A	Qty B	Qty C	Qty D	Qty E	I.C	Remark
19	T2610-39252	BOLT	1						M8*1.25
20	T2610-39222	HUB 2,CLUTCH	1						
21	T2610-39202	CLUTCH	1						
22	01053-50645	BOLT v	1						
23	01123-50835	BOLT, WITH WASHER	2						M8X1.25
24	T2610-39233	SPRING	1						DIA2.3
25	T5715-32313	HOLDER, LEVER	1						
26	01123-50820	BOLT, WASHER v	2						M8XP1.25
27	06613-10010	NIPPLE, GREASE	1						A-M6F
28	T2165-39281	STOPPER	2						
29	T5715-39401	SHAFT,SET	1						
30	04613-50060	RING SNAP	1						
31	04724-00180	PACKING	1						
32	TD24-0002A	COLLAR,FRONTAXLESHAFT	1						T1.0

----> Old replace New <---- New replace Old <-X-> Not interchangeable
<---> Interchangeable <-O-> Interchangeable with another part(s)
* Please place an order assy(*)

https://tractormanualz.com/

TD2-G511502

ENGINE ELECTRICAL GROUP(2)

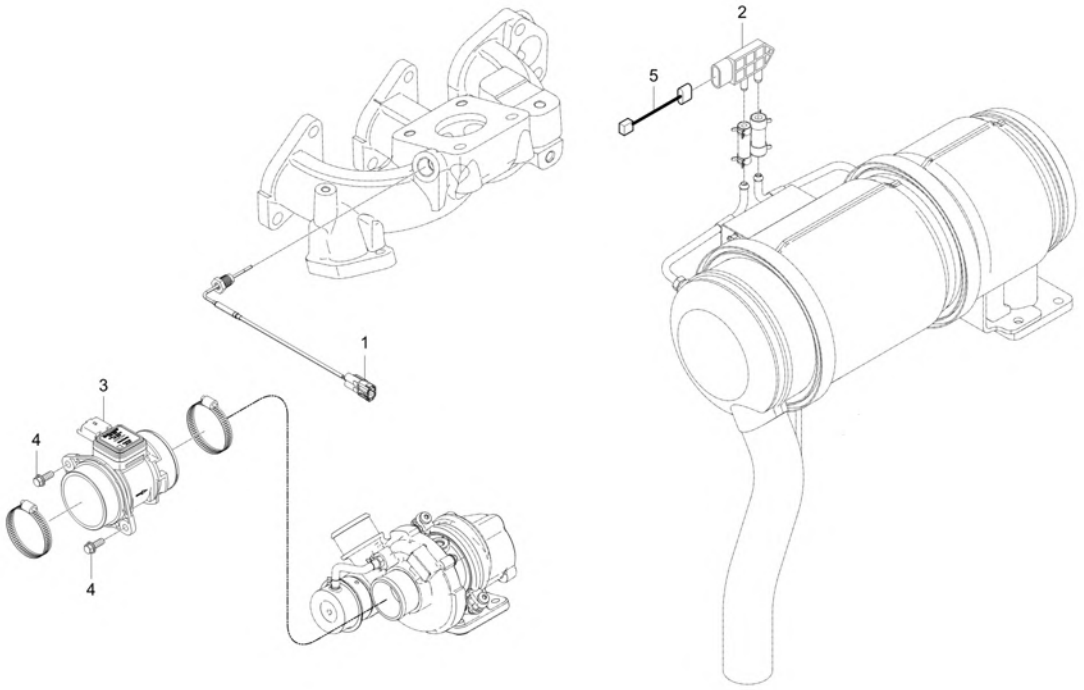

A : DK6010HSE

No.	Part Number	Description	Qty A	Qty B	Qty C	Qty D	Qty E	I.C	Remark
1	F5800-26501	EXHAUST GAS TEMPERATURE SENSOR	1						
2	EF17-0007A	SENSOR, DPF DIFF PRESS	1						
3	F5800-26801	SENSOR, AIR MASS FLOW	1						N
4	01754-50610	BOLT, FLANGE	2						M6XP1.0
5	TD25-0090A	WIRE HARNESS, CONNECTING DPS v	1						

----> Old replace New
<----> Interchangeable
* Please place an order assy(*)
<---- New replace Old
<-O-> Interchangeable with another part(s)
<-X-> Not interchangeable

https://tractormanualz.com/

TD2-G516001

FUEL HEATER OPTION GROUP

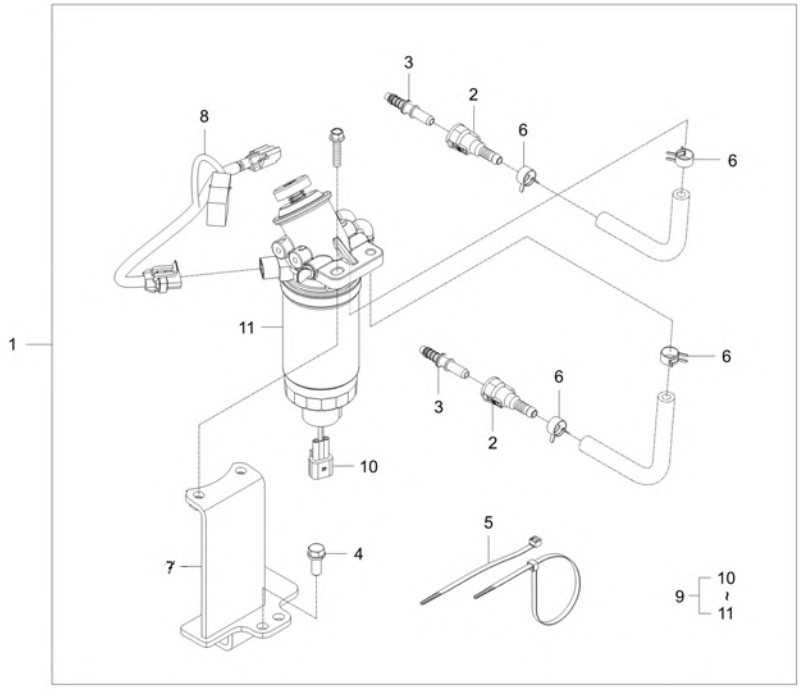

A : DK6010HSE

No.	Part Number	Description	Qty A	Qty B	Qty C	Qty D	Qty E	I.C	Remark
1	T5758-A7072	Fuel Heater Kit	1						
2	F6800-16131	QUICK CONNECTOR	2						-
3	F6800-16181	ADAPTER	2						OD8.4*ID4.7
4	01123-50820	BOLT, WASHER v	2						M8XP1.25
5	T2185-82551	CABLE TIE, BLACK / 300	2						L290
6	09318-88130	CLAMP, HOSE	4						
7	F5835-16142	BRACKET, FUEL-FILTER v	1						-
8	T5758-69341	WIRE,CONNECTION	1						
9	F5800-16403	FILTER, ASSY FUEL	1						
10	F6800-16121	SENSOR, FUEL WATER	1						
11	F6800-16411	FILTER, FUEL v	1						

----> Old replace New <---- New replace Old <-X-> Not interchangeable
<---> Interchangeable <-O-> Interchangeable with another part(s)
* Please place an order assy(*)

https://tractormanualz.com/

TD2-G524002

REFLECTOR GROUP

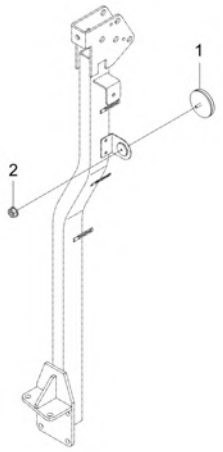

A : DK6010HSE

No.	Part Number	Description	Qty A	Qty B	Qty C	Qty D	Qty E	I.C	Remark
1	T5638-85721	ASS'Y REFLECTOR dnr v	2						
1	T4144-85721	ASS'Y REFLECTOR v	2					<------	
2	02761-50050	NUT, FLANGE	2						M5XP0.8

----> Old replace New
<---> Interchangeable
* Please place an order assy(*)
<---- New replace Old
<-O-> Interchangeable with another part(s)
<-X-> Not interchangeable

https://tractormanualz.com/

TD2-G531011

WIRE HARNESS GROUP

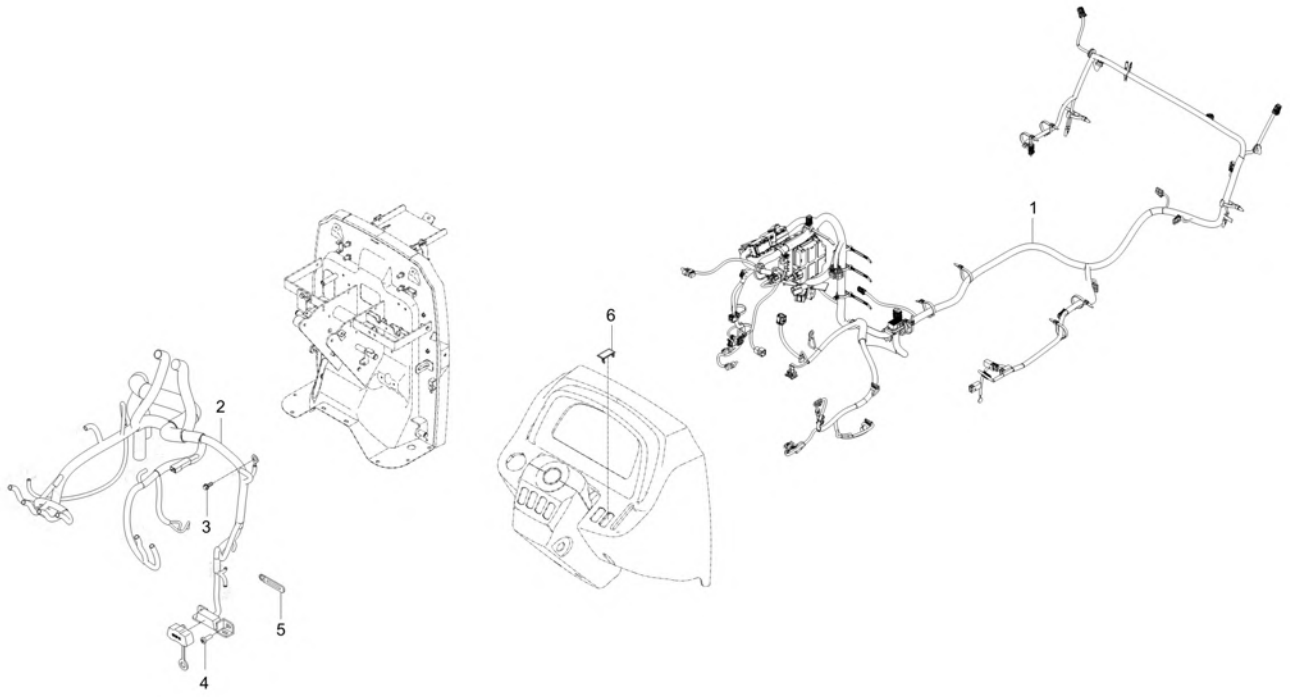

A : DK6010HSE

No.	Part Number	Description	Qty A	Qty B	Qty C	Qty D	Qty E	I.C	Remark
1	TD25-0033B	ASSYWIREHARNESS,MAIN-USA v	1 UGG700001 ~ VGG700016						
1	TD25-0033C	ASSY WIRE HARNESS, MAIN-USA	1					<--X-->	
2	TD25-0035B	ASSYWIREHARNESS,PANEL-USA,ROPS dnr v	1 UGG700001 ~ VGG700016						
2	TD25-0035C	ASSY WIRE HARNESS, PANEL US ROPS v	1					<--X-->	
3	01754-50612	BOLT, FLANGE	2						M6*1.0
4	03054-50514	SCREW	2						
5	37155-3447-1	CLAMP,CORD	5						-
6	T4025-68301	COVER	1						

----> Old replace New
<---- New replace Old
<-X-> Not interchangeable
<---> Interchangeable
<-O-> Interchangeable with another part(s)
* Please place an order assy(*)

https://tractormanualz.com/

TD2-G511002

ENGINE ELECTRICAL GROUP(1)

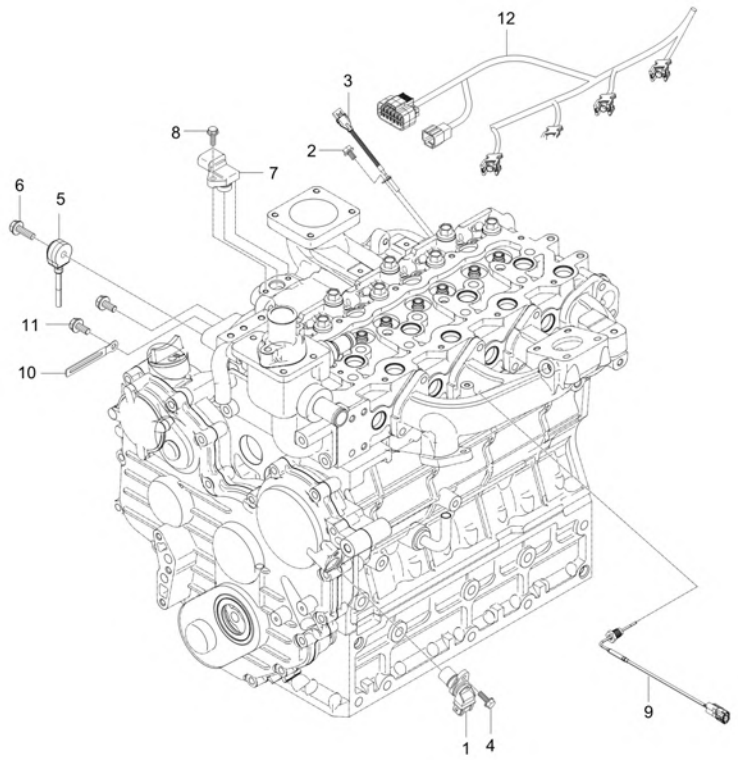

A : DK6010HSE

No.	Part Number	Description	Qty A	Qty B	Qty C	Qty D	Qty E	I.C	Remark
1	F6800-26201	SENSOR, CAMSHAFT WHEEL v	1						
2	01754-50616	BOLT, FLANGE v	1						M6XP1.0
2	01754-50610	BOLT, FLANGE	1					<------	M6XP1.0
3	F6800-26303	SENSOR, CRANKSHAFT WHEEL dnr v	1						
3	EH29-0002A	ASSY SENSOR, CRANKSHAFT WHEEL v	1					<------	
4	01754-50616	BOLT, FLANGE v	1						M6XP1.0
5	F6800-26401	SENSOR, KNOCK	1						
6	01754-50830	BOLT FLANGE	1						M8XP1.25
7	EH19-0003A	ASSY SENSOR, TMAP	1						
8	01754-50616	BOLT, FLANGE v	1						M6XP1.0
9	F5800-26501	EXHAUST GAS TEMPERATURE SENSOR	1						
9	F5800-26502	EXHAUST GAS TEMPERATURE SENSOR	1					<----->	
10	37150-3447-1	WIR'G CLAMP	2						T0.5
10	37150-3447-1	WIR'G CLAMP	1					<------	T0.5
11	01754-50812	BOLT, FLANGE	2						M8XP1.25
12	TE15-0112A	ASSY WIRE HARENESS INJECTOR	1						

----> Old replace New
<---- New replace Old
<-X-> Not interchangeable
<---> Interchangeable
<-O-> Interchangeable with another part(s)
* Please place an order assy(*)

https://tractormanualz.com/

TD2-G511503

ENGINE ELECTRICAL GROUP(2)

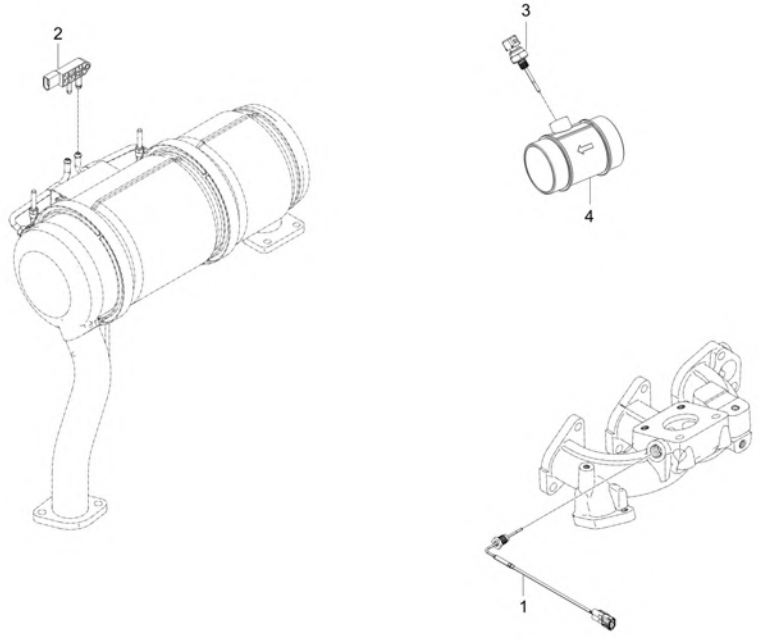

A : DK6010HSE

No.	Part Number	Description	Qty A	Qty B	Qty C	Qty D	Qty E	I.C	Remark
1	F5800-26501	EXHAUST GAS TEMPERATURE SENSOR	1						
1	F5800-26502	EXHAUST GAS TEMPERATURE SENSOR	1					<----->	
2	EF17-0007A	SENSOR, DPF DIFF PRESS	1						
3	EH19-0004A	ASSY SENSOR, INTAKE AIR TEMP-T1	1						
4	EH39-0002A	HOUSING-INTAKE TEMP SENSOR	1						
4	EH39-0002B	HOUSING-INTAKE TEMP SENSOR	1					<----->	

----> Old replace New
<----> Interchangeable
* Please place an order assy(*)
<---- New replace Old
<-O-> Interchangeable with another part(s)
<-X-> Not interchangeable

https://tractormanualz.com/

TD2-G512001

ENGINE ELECTRICAL GROUP(3)

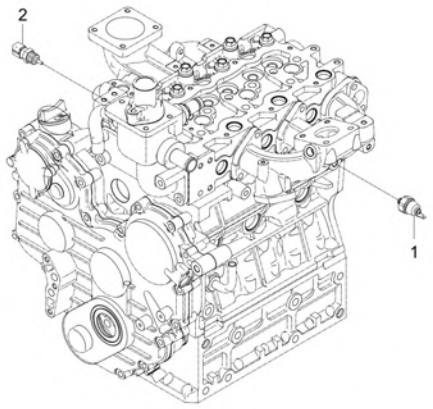

A : DK6010HSE

No.	Part Number	Description	Qty A	Qty B	Qty C	Qty D	Qty E	I.C	Remark
1	E5500-39013	OIL SWITCH	1						
2	E7240-32731	TEMPERATURE SENSOR ASSY	1						

----> Old replace New
<---- New replace Old
<-X-> Not interchangeable
<---> Interchangeable
<-O-> Interchangeable with another part(s)
* Please place an order assy(*)

https://tractormanualz.com/

TD2-G513003

STARTER MOTOR GROUP

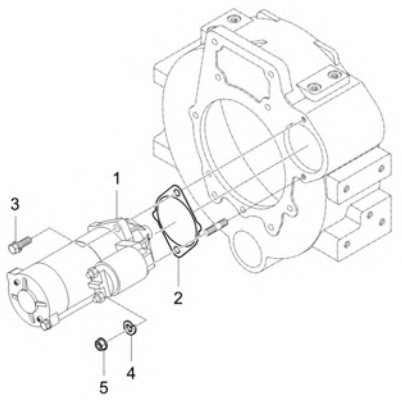

A : DK6010HSE

No.	Part Number	Description	Qty A	Qty B	Qty C	Qty D	Qty E	I.C	Remark
1	E6864-63011	ASSY STARTER	1						12V 1.7KW
2	E6200-04623	GASKET v	1						T0.5
3	01133-51030	WITH WASHER BOLT	1						M10XP1.25
4	04512-50100	SPRING WASHER	1						M10
5	02176-50100	NUT v	1						M10XP1.25

----> Old replace New
<---> Interchangeable
* Please place an order assy(*)
<---- New replace Old
<-O-> Interchangeable with another part(s)
<-X-> Not interchangeable

https://tractormanualz.com/

TD2-G513504

BATTERY GROUP

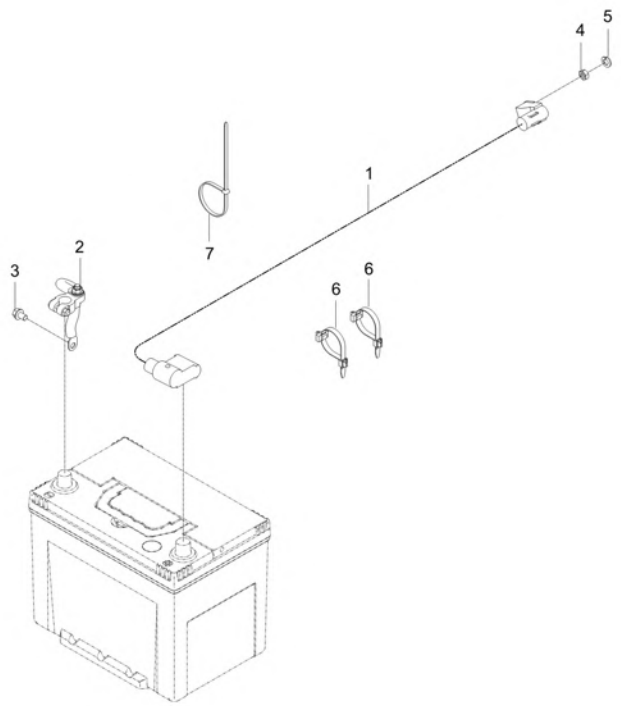

A : DK6010HSE

No.	Part Number	Description	Qty A	Qty B	Qty C	Qty D	Qty E	I.C	Remark
1	TD25-0031A	ASSY WIRE HARNESS,BATTERYPOS	1						
2	T5210-69612	FRAME BATTERY CABLE - v	1						
3	01754-50812	BOLT, FLANGE	1						M8XP1.25
4	02156-50080	NUT v	1						M8XP1.25
5	04512-50080	SPRING WASHER	1						M08
6	P5370-82551	BAND, CABLE	2						
7	T2185-82551	CABLE TIE, BLACK / 300	1						L290

----> Old replace New
<----> Interchangeable
* Please place an order assy(*)
<---- New replace Old
<-O-> Interchangeable with another part(s)
<-X-> Not interchangeable

https://tractormanualz.com/

TD2-G514001

ALTERNATOR GROUP

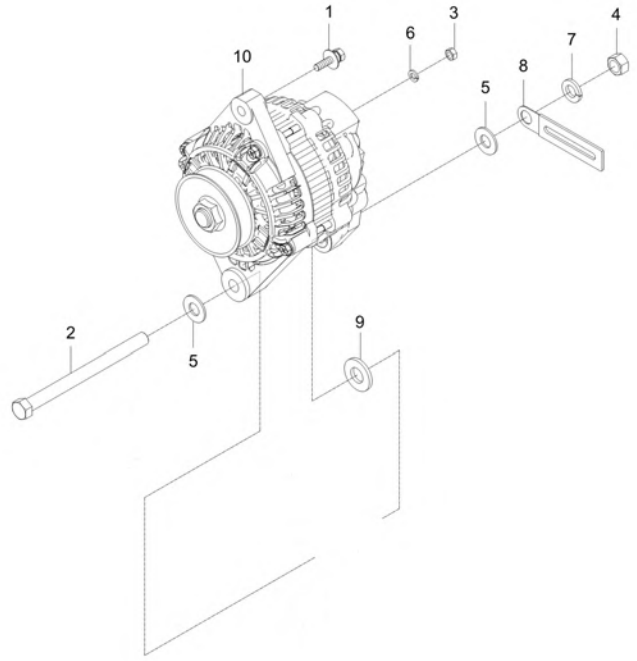

A : DK6010HSE

No.	Part Number	Description	Qty A	Qty B	Qty C	Qty D	Qty E	I.C	Remark
1	01127-50825	BOLT	1						M8XP1.25
2	01774-51003	FLANGE_BOLT	1						M10XP1.25
3	02156-50080	NUT v	1						M8XP1.25
4	02176-50100	NUT v	1						M10XP1.25
5	04013-50100	PLAIN WASHER	2						M10
6	04512-50080	SPRING WASHER	1						M08
7	04512-50100	SPRING WASHER	1						M10
8	37155-3447-1	CLAMP,CORD	1						-
9	E5800-64102	SPACER	1						DIA24*T5.15
10	E7251-64011	ALTERNATOR ASSY 75AMP v	1						
10	E7251-64012	ALTERNATOR 75A	1					<------	

----> Old replace New
<---> Interchangeable
* Please place an order assy(*)
<---- New replace Old
<-O-> Interchangeable with another part(s)
<-X-> Not interchangeable

https://tractormanualz.com/

TD2-G514501

GLOW CONTROL GROUP

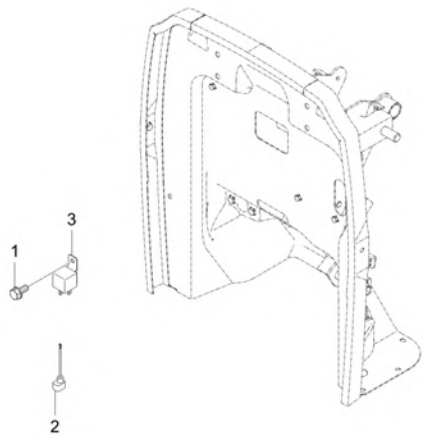

A : DK6010HSE

No.	Part Number	Description	Qty A	Qty B	Qty C	Qty D	Qty E	I.C	Remark
1	01754-50610	BOLT, FLANGE	1						M6XP1.0
2	T2198-69471	HARNESS WIRE 3, CABLE	1						
3	T5535-69951	RELAY 4P v	1						Bracket

----> Old replace New
<----> Interchangeable
* Please place an order assy(*)
<---- New replace Old
<-O-> Interchangeable with another part(s)
<-X-> Not interchangeable

https://tractormanualz.com/

TD2-G515003

START CONTROL GROUP

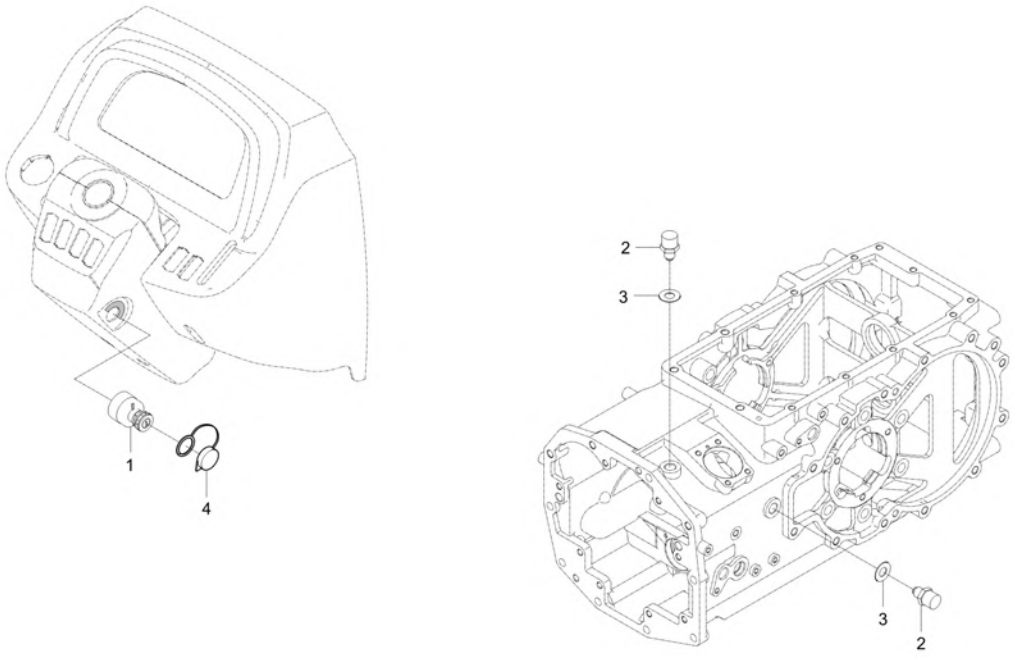

A : DK6010HSE

No.	Part Number	Description	Qty A	Qty B	Qty C	Qty D	Qty E	I.C	Remark
1	T5520-75171	ASSY SWITCH, STARTER v	1						
2	T5210-69401	ASSY SWITCH SAFETY v	2						
3	T4682-43571	COLLAR 1.0T, ADJUSTING	2						T1.0
4	T4837-77774	COVER, STARTER SWITCH PROOF WATER	1						

----> Old replace New
<---- New replace Old
<-X-> Not interchangeable
<---> Interchangeable
<-O-> Interchangeable with another part(s)
* Please place an order assy(*)

https://tractormanualz.com/

TD2-G515503

SAFETY STARTER GROUP

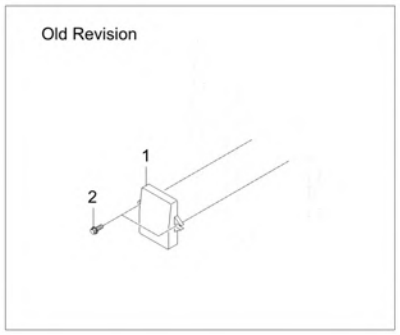

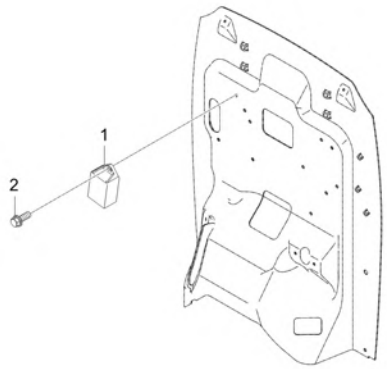

A : DK6010HSE

No.	Part Number	Description	Qty A	Qty B	Qty C	Qty D	Qty E	I.C	Remark
1	TD25-0114B	UNIT, SAFETY CONTROL	1						
2	01754-50620	BOLT, FLANGE	1						

----> Old replace New
<---- New replace Old
<-X-> Not interchangeable
<---> Interchangeable
<-O-> Interchangeable with another part(s)
* Please place an order assy(*)

https://tractormanualz.com/

TD2-G516002

FUEL HEATER GROUP

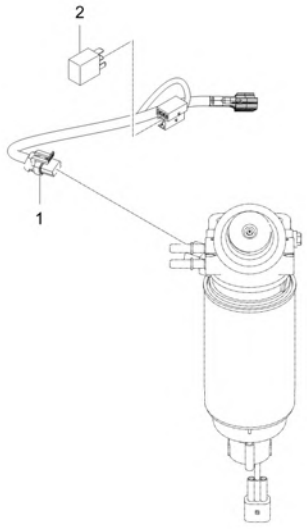

A : DK6010HSE

No.	Part Number	Description	Qty A	Qty B	Qty C	Qty D	Qty E	I.C	Remark
1	T5758-69341	WIRE,CONNECTION	1						
2	T5710-69961	RELAY(4P)	1						

----> Old replace New
<----> Interchangeable
* Please place an order assy(*)
<---- New replace Old
<-O-> Interchangeable with another part(s)
<-X-> Not interchangeable

https://tractormanualz.com/

TD2-G522002

TURN SIGNAL LAMP GROUP

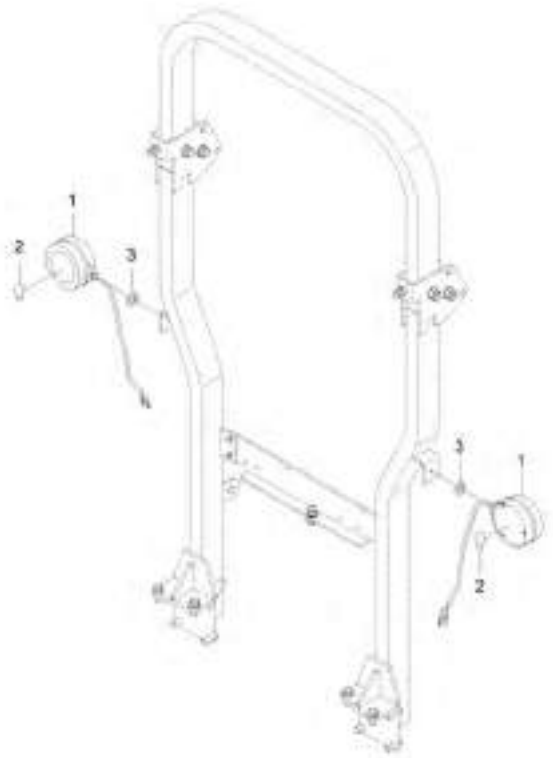

A : DK6010HSE

No.	Part Number	Description	Qty A	Qty B	Qty C	Qty D	Qty E	I.C	Remark
1	TB25-0009A	ASSY LAMP, TURN SIGNAL	2						
2	TB25-0010A	BULB-27W	1						
3	04512-50100	SPRING WASHER	2						M10

----> Old replace New
<----> Interchangeable
* Please place an order assy(*)
<---- New replace Old
<-O-> Interchangeable with another part(s)
<-X-> Not interchangeable

https://tractormanualz.com/

TD2-G522502

REAR COMBINATION LAMP GROUP

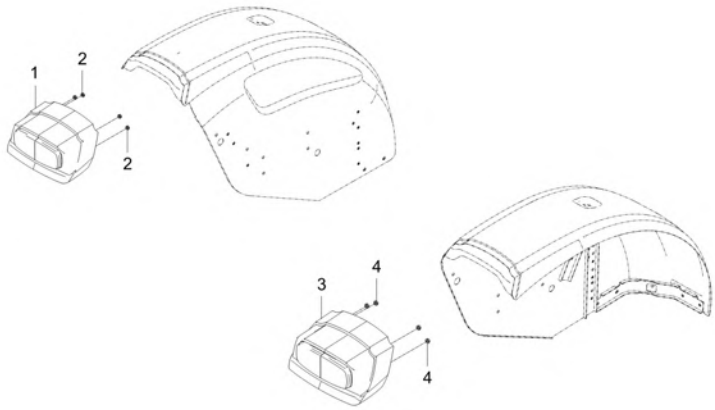

A : DK6010HSE

No.	Part Number	Description	Qty A	Qty B	Qty C	Qty D	Qty E	I.C	Remark
1	TD25-0055A	ASSYREAR,COMBINATIONLAMP-LH	1						
2	02751-50060	NUT, FLANGE	4						M6XP1.0
3	TD25-0056A	ASSYREAR,COMBINATIONLAMP-RH	1						
4	02751-50060	NUT, FLANGE	4						M6XP1.0

----> Old replace New
<---- New replace Old
<-X-> Not interchangeable
<---> Interchangeable
<-O-> Interchangeable with another part(s)
* Please place an order assy(*)

https://tractormanualz.com/

TD2-G525003

LIGHT CONTROL GROUP

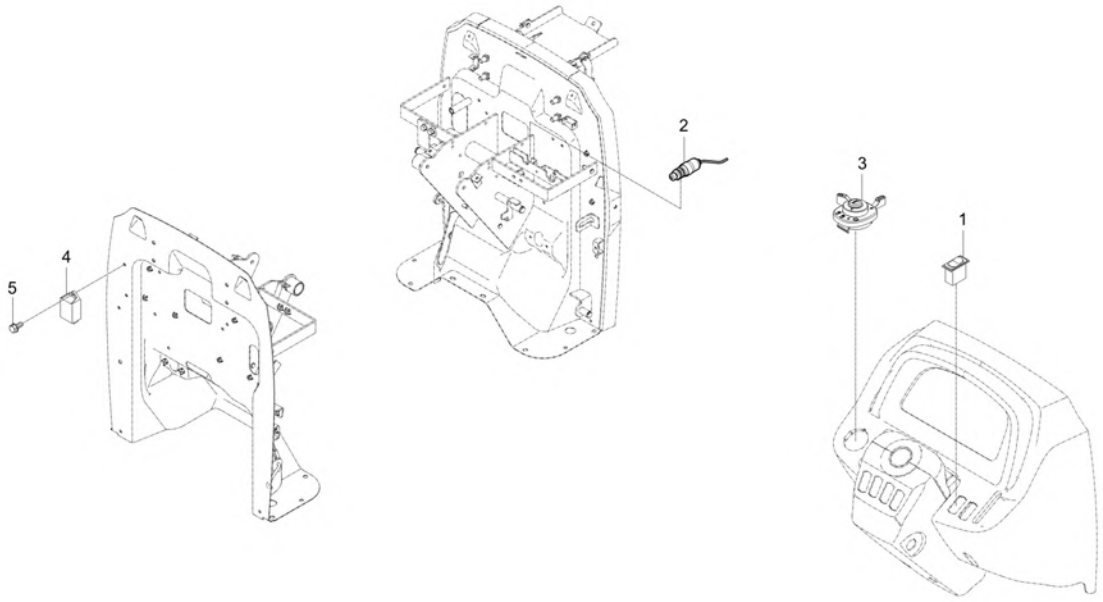

A : DK6010HSE

No.	Part Number	Description	Qty A	Qty B	Qty C	Qty D	Qty E	I.C	Remark
1	T5758-68351	SWITCH, EMERGENCY LAMP	1						
2	T4520-41821	ASSY STOP SWITCH	1						
3	T2555-69023	ASS'Y COMBINATION SWITCH v	1						
4	T2198-31052	FLASH UNIT	1						
5	01754-50618	FLANGE BOLT	1						
6	T4025-68301	COVER	1						

----> Old replace New
<----> Interchangeable
* Please place an order assy(*)
<---- New replace Old
<-O-> Interchangeable with another part(s)
<-X-> Not interchangeable

https://tractormanualz.com/

TD2-G525506

7 PIN SOCKET GROUP(SAE)

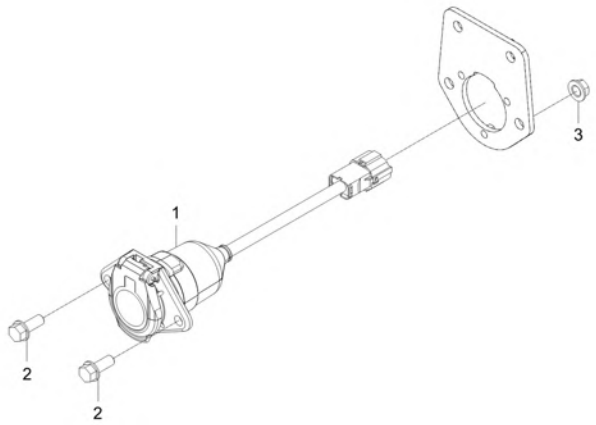

A : DK6010HSE

No.	Part Number	Description	Qty A	Qty B	Qty C	Qty D	Qty E	I.C	Remark
1	T5535-69931	7 PIN SOCKET ASS'Y SAE v	1						
2	01754-50820	BOLT, FLANGE	2						M8XP1.25
3	02751-50080	FLANGE NUT 8MMX1.25P	2						M8XP1.25

----> Old replace New
<---- New replace Old
<-X-> Not interchangeable
<---> Interchangeable
<-O-> Interchangeable with another part(s)
* Please place an order assy(*)

https://tractormanualz.com/

TD2-G531503

WIRE HARNESS FIXING GROUP

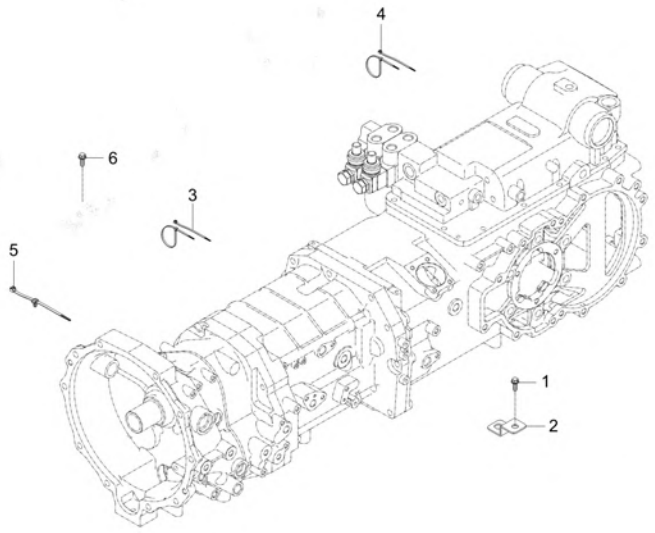

A : DK6010HSE

No.	Part Number	Description	Qty A	Qty B	Qty C	Qty D	Qty E	I.C	Remark
1	01754-50616	BOLT, FLANGE v	5						M6*P1.0
2	T5250-68771	BRACKET	3						
3	T2185-82551	CABLE TIE, BLACK / 300	10						L290
4	T2185-82561	BAND, CORD v	10						L200
5	T2198-82571	BAND CABLE	4						
6	01754-50616	BOLT, FLANGE v	2						M6*P1.0

----> Old replace New
<----> Interchangeable
* Please place an order assy(*)
<---- New replace Old
<-O-> Interchangeable with another part(s)
<-X-> Not interchangeable

https://tractormanualz.com/

TD2-G533006

DISPLAY CONTROL GROUP

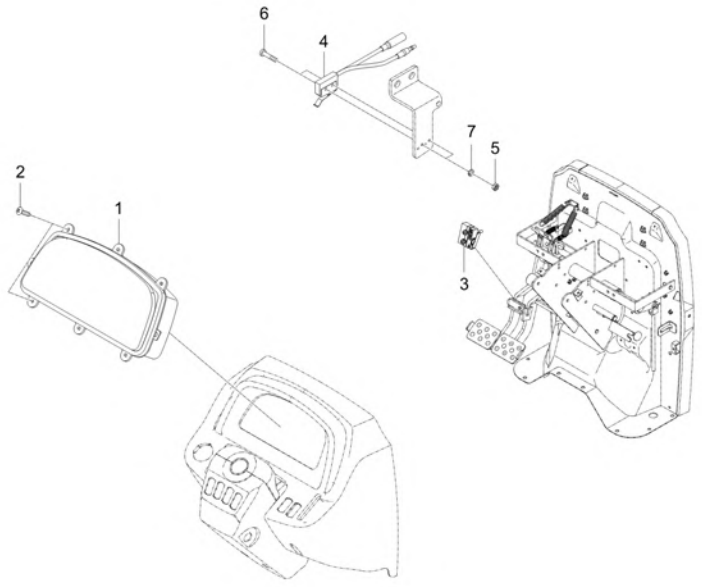

A : DK6010HSE

No.	Part Number	Description	Qty A	Qty B	Qty C	Qty D	Qty E	I.C	Remark
1	T5710-69014	ASSY PLATE, METER v	1 ~ UGG700044						
1	T5710-69015	ASSY PLATE,METER	1 UGG700045 ~ UGG700072					<------	
1	T5710-69016	ASSY PLATE,METER	1 UGG700073 ~ VGG700004					<------	
1	T5710-69017	ASSY PLATE, METER v	1 VGG700005 ~ WGG700024					<------	
2	38240-1883-1	TAPPING SCREW dnr v	6						M4X16
3	T5535-69281	MICRO SWITCH	1						
4	T2198-68811	MICRO SWITCH	1						DC30V 3A
5	02054-50020	NUT	2						M2*P0.4
6	03054-50214	BOLT	2						M2*P0.4*L14
7	04512-50020	WASHER, SPRING obs v	2						M2

----> Old replace New <---- New replace Old <-X-> Not interchangeable
<---> Interchangeable <-O-> Interchangeable with another part(s)
* Please place an order assy(*)

https://tractormanualz.com/

TD2-G533503

FUEL SENDER GROUP

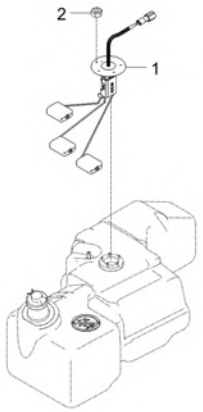

A : DK6010HSE

No.	Part Number	Description	Qty A	Qty B	Qty C	Qty D	Qty E	I.C	Remark
1	T5710-69212	UNIT, FUEL dnr v	1 TGG700001 ~ UGG700056						
1	TD25-0092A	UNIT,FUEL dnr v	1 UGG700057 ~ UGG700092					<----->	
1	TD25-0092B	ASSY SENDER, FUEL v	1 UGG700093 ~ WGG700024					<------	
2	02761-50040	NUT, FLANGE	5						

----> Old replace New
<---> Interchangeable
* Please place an order assy(*)
<---- New replace Old
<-O-> Interchangeable with another part(s)
<-X-> Not interchangeable

https://tractormanualz.com/

TD2-G534002

PTO CONTROL GROUP

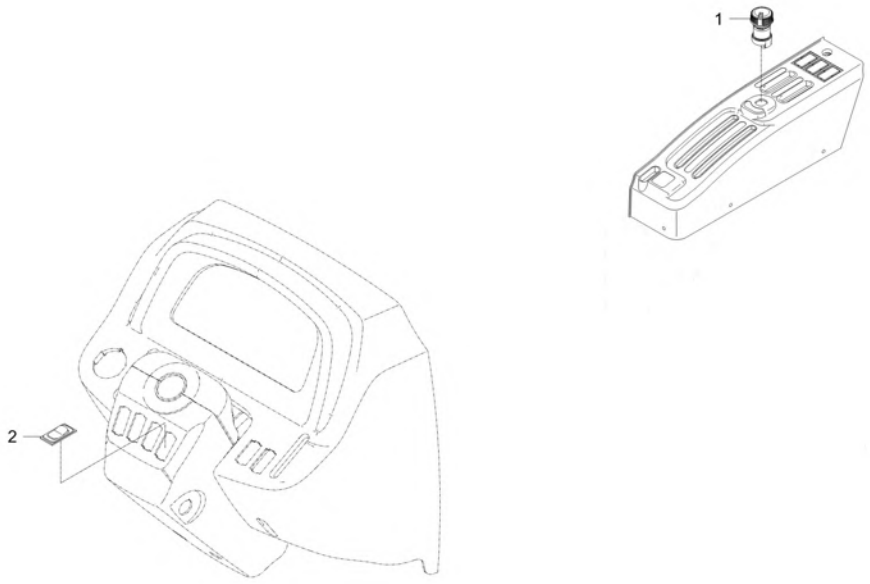

A : DK6010HSE

No.	Part Number	Description	Qty A	Qty B	Qty C	Qty D	Qty E	I.C	Remark
1	T5710-69252	PTO SWITCH v	1						
2	T4025-68301	COVER	1						

----> Old replace New
<----> Interchangeable
* Please place an order assy(*)
<---- New replace Old
<-O-> Interchangeable with another part(s)
<-X-> Not interchangeable

https://tractormanualz.com/

TD2-G534502

HORN GROUP

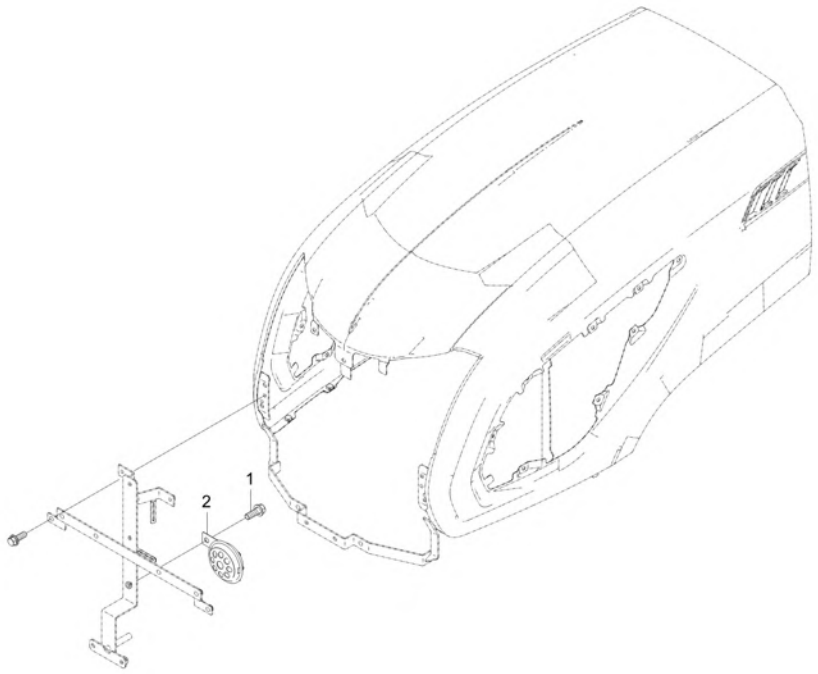

A : DK6010HSE

No.	Part Number	Description	Qty A	Qty B	Qty C	Qty D	Qty E	I.C	Remark
1	01123-50820	BOLT, WASHER v	1 TGG700001 ~ UGG700044						M8XP1.25
1	01023-50616	BOLT, WASHER	1 UGG700045 ~ WGG700024					<------	M6*P1.0
2	T2555-75951	ASSY HORN dnr v	1 ~ UGG700044						
2	T4144-75952	ASSY HORN	1 UGG700045 ~ WGG700024					<------	70파이, 420Hz, 110

----> Old replace New
<---> Interchangeable
* Please place an order assy(*)
<---- New replace Old
<-O-> Interchangeable with another part(s)
<-X-> Not interchangeable

https://tractormanualz.com/

TD2-G535001

TIER4 CONTROL GROUP

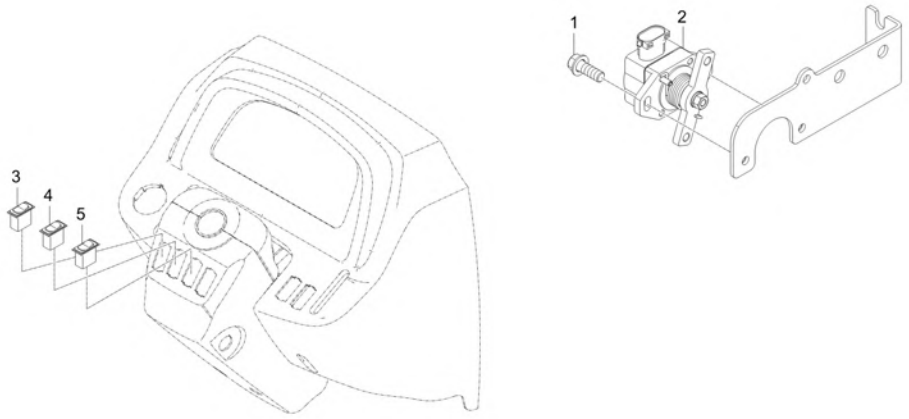

A : DK6010HSE

No.	Part Number	Description	Qty A	Qty B	Qty C	Qty D	Qty E	I.C	Remark
1	01023-50616	BOLT, WASHER	2						M6*P1.0
2	F6800-60011	THROTTLE POSITION SENSOR	1						
2	TD25-0140A	ASSY SENSOR, THROTTLE POSITION	1					<----->	
3	T5758-69251	DPF SWITCH	1						
4	T5758-69471	PTO SWITCH	1						
5	T5758-69491	CRUISE ADJUST SWITCH	1						

----> Old replace New
<----> Interchangeable
* Please place an order assy(*)
<---- New replace Old
<-O-> Interchangeable with another part(s)
<-X-> Not interchangeable

https://tractormanualz.com/

TD2-G511001 ENGINE ELECTRICAL GROUP(1)

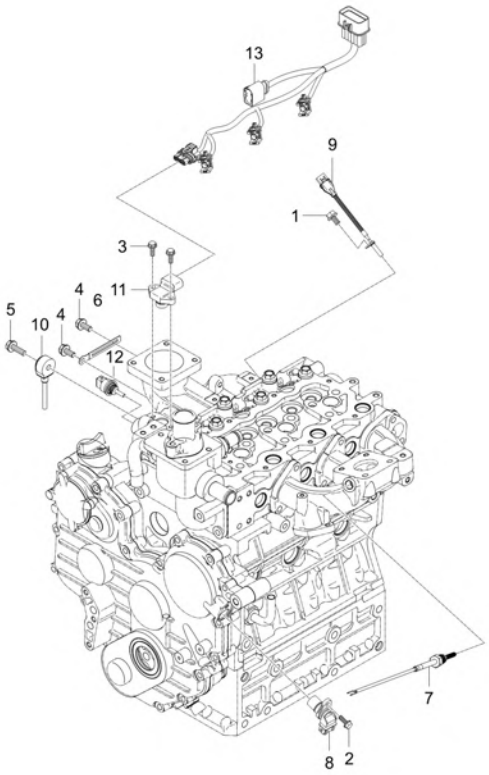

A : DK6010HSE

No.	Part Number	Description	Qty A	Qty B	Qty C	Qty D	Qty E	I.C	Remark
1	01754-50616	BOLT, FLANGE v	1						M6*P1.0
1	01754-50610	BOLT, FLANGE	1 ~ VGG700016					<------	M6XP1.0
2	01754-50616	BOLT, FLANGE v	1						M6*P1.0
3	01754-50616	BOLT, FLANGE v	2						M6*P1.0
4	01754-50812	BOLT, FLANGE	2						M8XP1.25
5	01754-50830	BOLT FLANGE	1						M8*P1.25
6	37150-3447-1	WIR'G CLAMP	2						T0.5
6	37150-3447-1	WIR'G CLAMP	1					<------	T0.5
7	F5800-26501	EXHAUST GAS TEMPERATURE SENSOR	1						
8	F6800-26201	SENSOR, CAMSHAFT WHEEL v	1						
9	F6800-26303	SENSOR, CRANKSHAFT WHEEL dnr v	1						
9	EH29-0002A	ASSY SENSOR, CRANKSHAFT WHEEL v	1					<------	
10	F6800-26401	SENSOR, KNOCK	1						
11	F6800-26701	SENSOR, INTAKE AIR PRESSURE	1						
12	F6800-26751	SENSOR, INTAKE AIR TEMPERATURE	1						
13	T5525-69313	INJECTOR CONNECTION WIRE HARNESS ASSAY	1						

----> Old replace New <---- New replace Old <-X-> Not interchangeable
<---> Interchangeable <-O-> Interchangeable with another part(s)
* Please place an order assy(*)

https://tractormanualz.com/

TD2-G513001

STARTER MOTOR GROUP

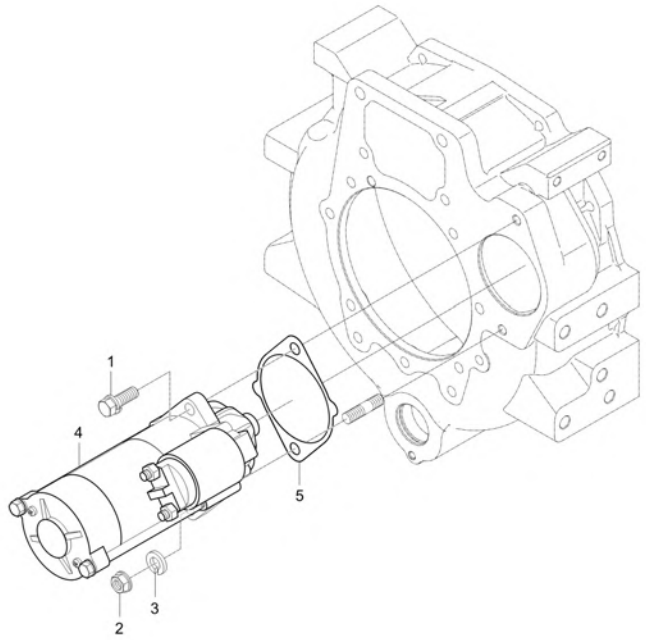

A : DK6010HSE

No.	Part Number	Description	Qty A	Qty B	Qty C	Qty D	Qty E	I.C	Remark
1	01133-51030	WITH WASHER BOLT	1						M10XP1.25
2	02176-50100	NUT v	1						M10XP1.25
3	04512-50100	SPRING WASHER	1						M10
4	E5500-63016	ASSY, STARTER MOTOR sp v	1						
5	E6200-04623	GASKET v	1						T0.5

----> Old replace New
<---> Interchangeable
* Please place an order assy(*)
<---- New replace Old
<-O-> Interchangeable with another part(s)
<-X-> Not interchangeable

https://tractormanualz.com/

TD2-G521001

HEAD LIGHT GROUP

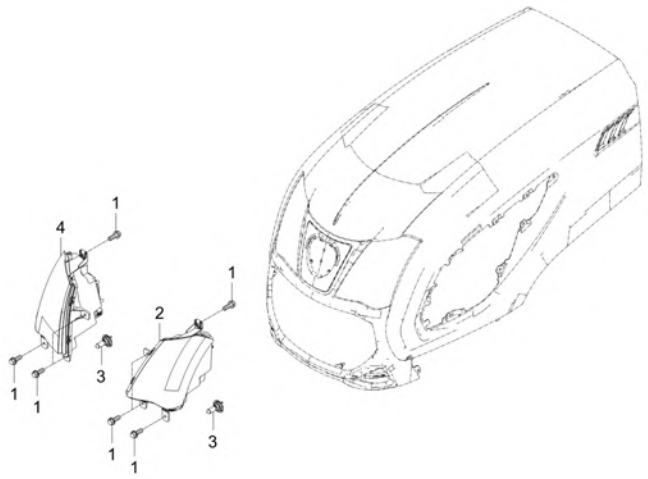

A : DK6010HSE

No.	Part Number	Description	Qty A	Qty B	Qty C	Qty D	Qty E	I.C	Remark
1	01754-50616	BOLT, FLANGE v	8						M6*P1.0
2	T5710-69513	HEAD LAMP ASSY LH	1						
3	T2555-69571	BULB	1						H7 12V 55W
4	T5710-69523	HEAD LAMP ASSY RH	1						

----> Old replace New
<---- New replace Old
<-X-> Not interchangeable
<---> Interchangeable
<-O-> Interchangeable with another part(s)
* Please place an order assy(*)

https://tractormanualz.com/

TD2-G532501

HEAD LAMP WIRE HARNESS GROUP

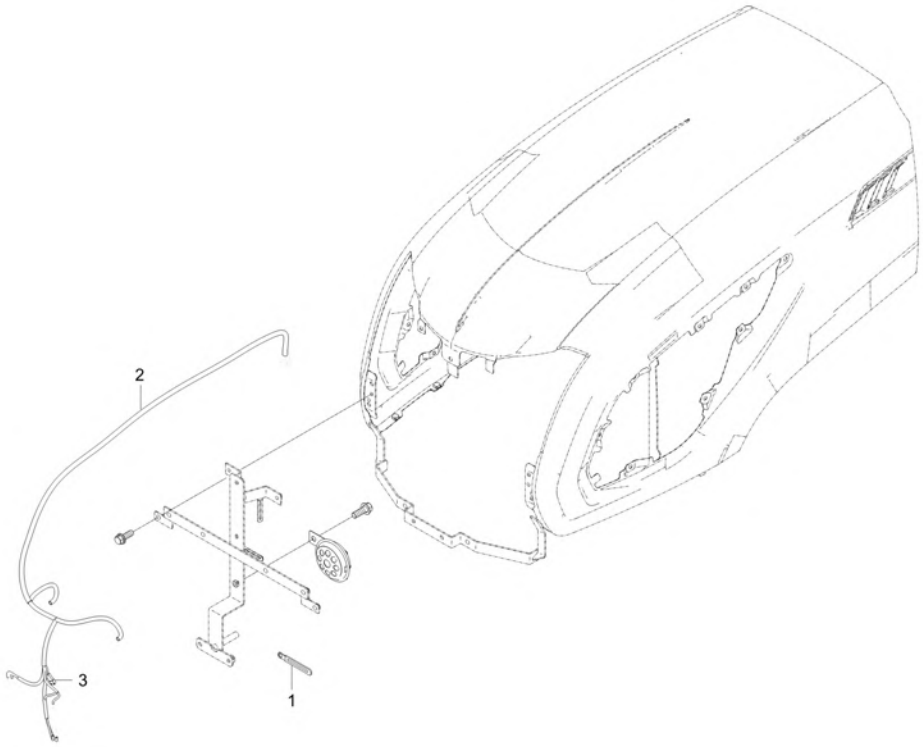

A : DK6010HSE

No.	Part Number	Description	Qty A	Qty B	Qty C	Qty D	Qty E	I.C	Remark
1	37150-3447-1	WIR'G CLAMP	3						T0.5
2	T5710-69391	ASS'Y WIRE HARNESS HEAD LAMP	1						
3	T4620-69331	DIODE 2P	1						800V,3.0A

----> Old replace New
<---> Interchangeable
* Please place an order assy(*)
<---- New replace Old
<-O-> Interchangeable with another part(s)
<-X-> Not interchangeable

https://tractormanualz.com/

TD2-G6A2002

FRONT WEIGHT GROUP(OPTION)

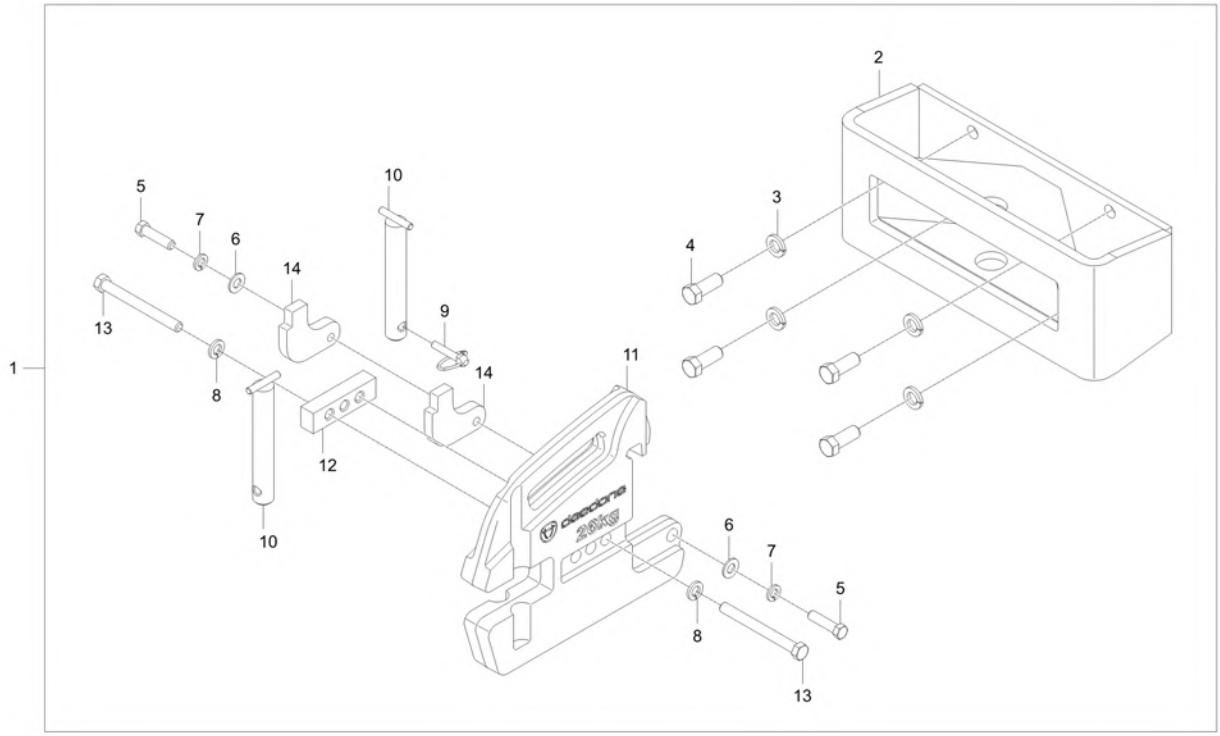

A : DK6010HSE

No.	Part Number	Description	Qty A	Qty B	Qty C	Qty D	Qty E	I.C	Remark
1	T5710-A5031	WEIGHT KIT	1						
1	T5710-A5032	WEIGHT KIT	1					<------	
2	T5525-89411	BRACKET, FRONT-WEIGHT dnr v	1						
3	04512-50140	SPRING WASHER	4						
4	01173-51435	BOLT v	4						M14XP1.5
5	01173-51455	BOLT	2						M14P1.5*55
6	04013-50140	PLAIN WAHSER	2						M14
7	04512-50140	SPRING WASHER	2						
8	04512-50160	WASHER, SPRING	2						M16
9	34150-3764-4	PIN,CLIP	1						DIA10.0
10	T5525-89421	PIN	2						
11	T5525-89451	WEIGHT, FR RR dnr v	6						
11	T5525-89452		1					<------	
12	T5525-89461	MOUNTING PLATE v	1						T25.0
13	T5525-89471	BOLT, FRONT WIGHT	2						M16XP1.5XL 150
14	T5525-89481	BRACKET	2						T16

----> Old replace New
<---- New replace Old
<-X-> Not interchangeable
<---> Interchangeable
<-O-> Interchangeable with another part(s)
* Please place an order assy(*)

https://tractormanualz.com/

TD2-G6D1043

LABEL(BONNET COVER) GROUP

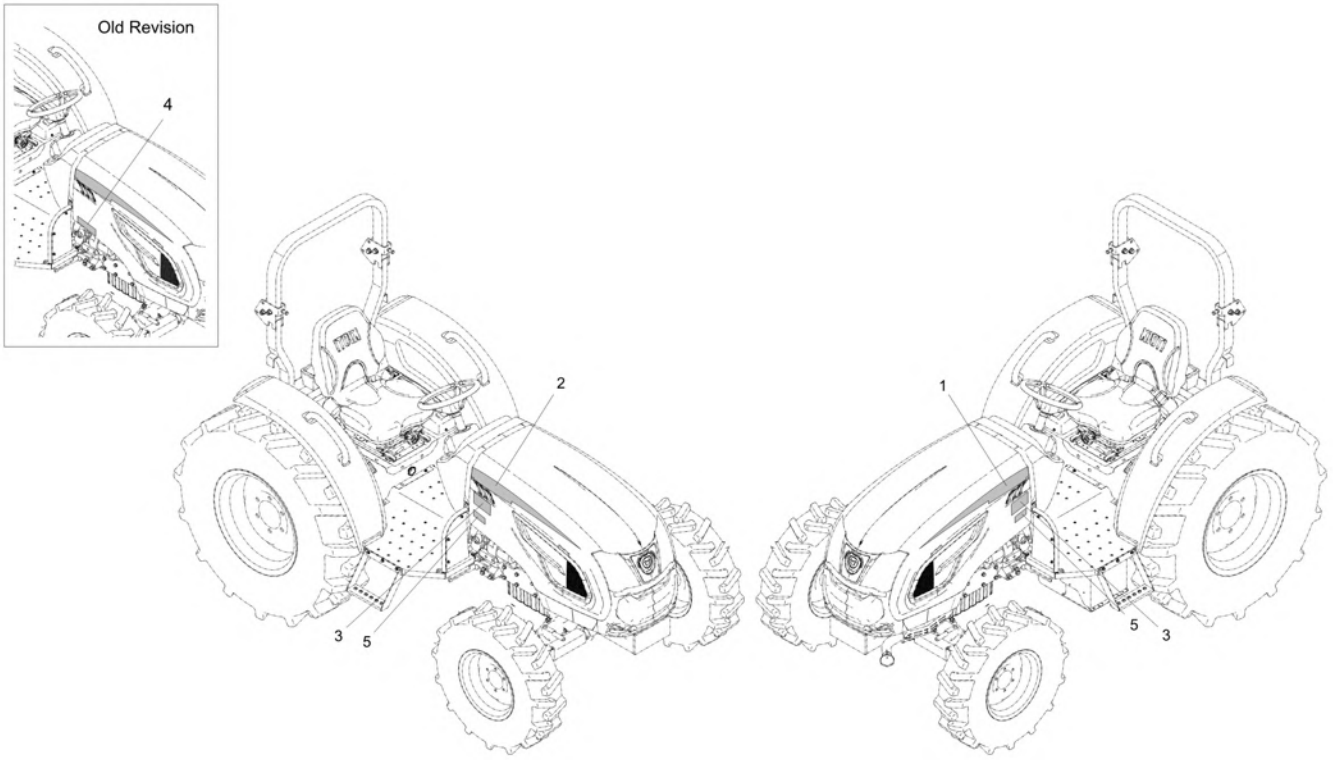

A : DK6010HSE

No.	Part Number	Description	Qty A	Qty B	Qty C	Qty D	Qty E	I.C	Remark
1	T5715-55411	BRAND LABEL, LH	1						
2	T5715-55431	BRAND LABEL, RH	1						
3	TD26-0950A	LABEL, MODEL-(DK6010)	2						
4	T5270-52011	LABEL, ECO CRDI	2						
5	T5525-87621	LABEL	2						

----> Old replace New
<----> Interchangeable
* Please place an order assy(*)
<---- New replace Old
<-O-> Interchangeable with another part(s)
<-X-> Not interchangeable

https://tractormanualz.com/

TD2-G6D2009

LABEL(MFG CERTIFICATE) GROUP

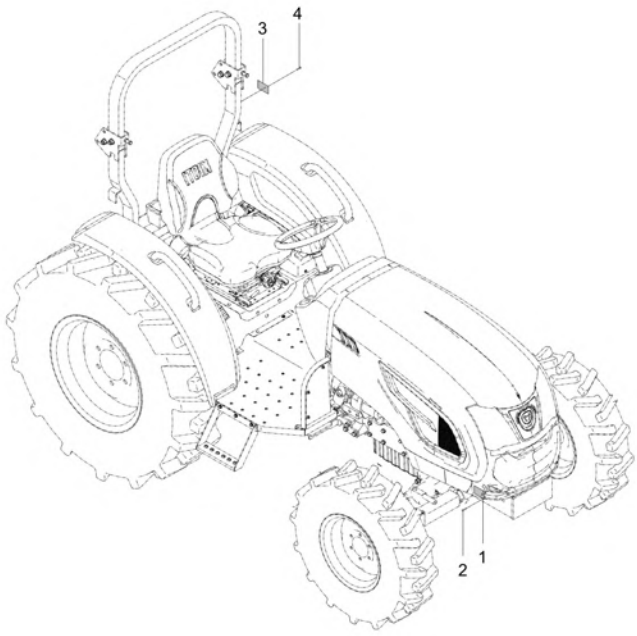

A : DK6010HSE

No.	Part Number	Description	Qty A	Qty B	Qty C	Qty D	Qty E	I.C	Remark
1	T4935-52011	NAME PLATE	1						T0.5
2	05624-20408	RIVET	4						
3	TD26-0936A	LABEL, ROPS OECD CERTIFICATE	1						T0.5
3	TD26-0936B	LABEL, ROPS OECD CERTIFICATE	1					<------	T0.5
4	05624-20408	RIVET	2						

----> Old replace New
<----> Interchangeable
* Please place an order assy(*)
<---- New replace Old
<-O-> Interchangeable with another part(s)
<-X-> Not interchangeable

https://tractormanualz.com/

TD2-G6D3015

LABEL(MAIN/ETC) GROUP

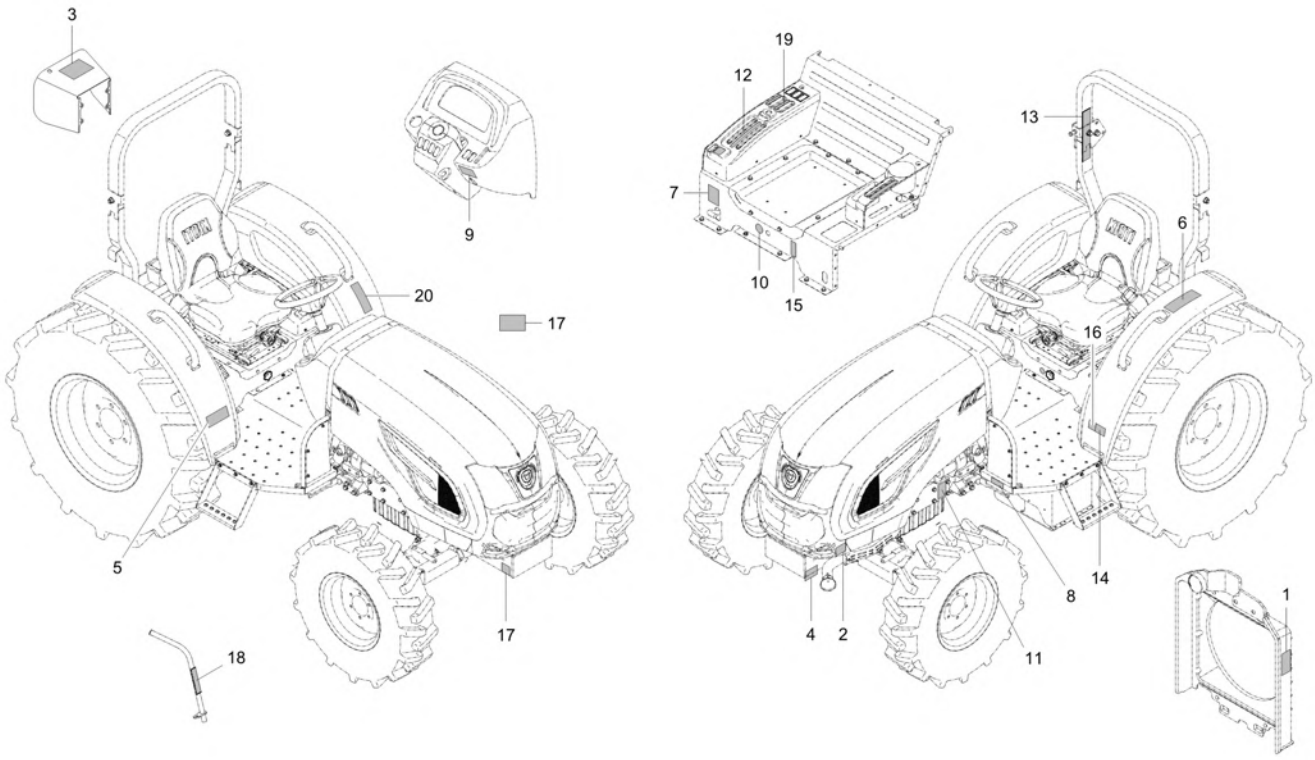

A : DK6010HSE

No.	Part Number	Description	Qty A	Qty B	Qty C	Qty D	Qty E	I.C	Remark
1	T4625-52351	LABEL, FAN CAUTION	1						
2	T2615-55112	LABEL, MUFFLER CAUTION	1						T0.05-0.08
3	T2555-52262	LABEL, CAUTION	1						
4	T2555-52282	LABEL RADIATOR v	1						
5	T4182-53191	LABEL, WARNING	1						
6	T2555-52141	LABEL,CAUTION	1						
7	T2611-26693	LABEL, DIFFERENTIAL FIXING	1						
8	TC26-0388A	LABEL, WARNING FUELING	1						
9	T4938-52351	LABEL, BRAKE REMINDER	1						
10	T2610-52461	LABEL, SPEED CONTROL	1						
11	T4938-53551	LABEL	1						
12	T5710-55461	LABEL, POSITION&RAFTLEVER	1						
13	T2555-52353	ROPS LABEL	1						
14	T4625-52281	LABEL HYD BLOCK	1						
15	T2241-50311	NAME,PLATE	1						
16	F6800-29112	LABEL CAUTION v	1						
17	TG16-1530A	DAEDONGOILLABEL(EN)	1						80 x 35
17	TG16-1530B	DAEDONG OIL LABEL	1					<------	80 x 35

----> Old replace New <---- New replace Old <-X-> Not interchangeable
<---> Interchangeable <-O-> Interchangeable with another part(s)
* Please place an order assy(*)

https://tractormanualz.com/

TD2-G6D3015

LABEL(MAIN/ETC) GROUP

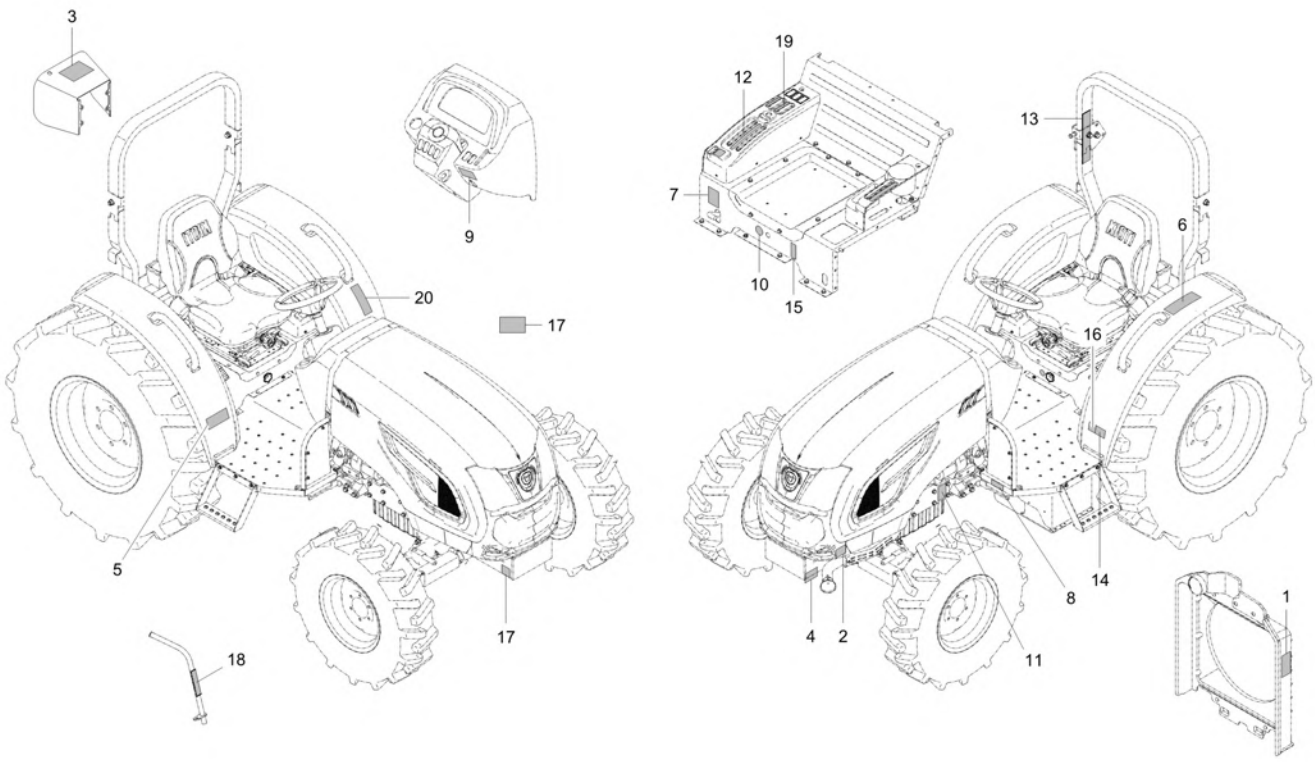

A : DK6010HSE

No.	Part Number	Description	Qty A	Qty B	Qty C	Qty D	Qty E	I.C	Remark
18	TG16-1540A	DAEDONGOILLABEL(EN)	1						135 x 35
19	T4837-51242	LABEL, DOUBLE ACTING VALVE LEVER	1						
20	TD26-1009A	LABEL, WARNING	1 UGG700073 ~ VGG700028						-
20	TD26-1009B	LABEL, WARNING	1 VGG700029 ~ WGG700024					<------	-

----> Old replace New
<---- New replace Old
<-X-> Not interchangeable
<---> Interchangeable
<-O-> Interchangeable with another part(s)
* Please place an order assy(*)

https://tractormanualz.com/

TD2-G6F4503

REAR VIEW MIRROR GROUP

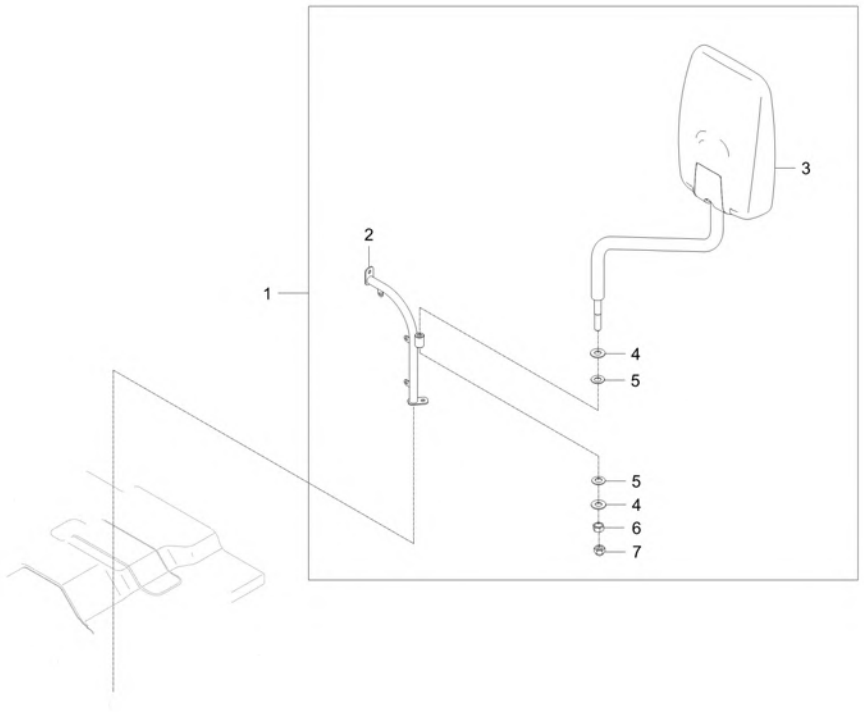

A : DK6010HSE

No.	Part Number	Description	Qty A	Qty B	Qty C	Qty D	Qty E	I.C	Remark
1	T5715-A5011	ASS'Y, REAR VIEW MIRROR	1						
2	T5710-51871	Frame	1						N
2	T5710-51872	MUD GUARD FRAME, LH v	1					<----->	-
3	T5565-88201	REAR VIEW MIRROR	1						
4	04013-50100	PLAIN WASHER	2						M10
5	T4668-83301	SPRING	2						
6	02176-50100	NUT v	1						M10XP1.25
7	44366-4723-1	NUT,CAP	1						

----> Old replace New
<---- New replace Old
<-X-> Not interchangeable
<---> Interchangeable
<-O-> Interchangeable with another part(s)
* Please place an order assy(*)

https://tractormanualz.com/

TD2-G6F9004

ACCESSORIES_SERVICE PARTS GROUP

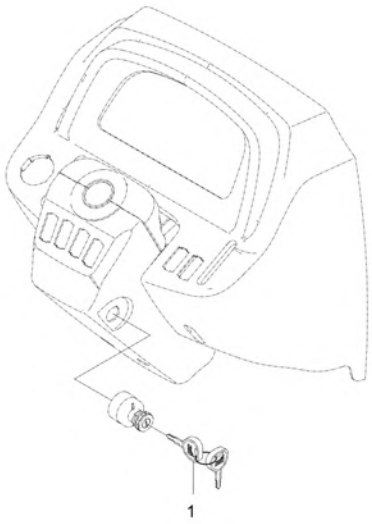

A : DK6010HSE

No.	Part Number	Description	Qty A	Qty B	Qty C	Qty D	Qty E	I.C	Remark
1	T5520-75191	DOUBLE SIDED KEY ASSY v	1						
1	TG35-0114A	ASSY KEY	1					<------	

----> Old replace New
<---- New replace Old
<-X-> Not interchangeable
<---> Interchangeable
<-O-> Interchangeable with another part(s)
* Please place an order assy(*)

https://tractormanualz.com/

TD2-G611009

AIR CLEANER GROUP

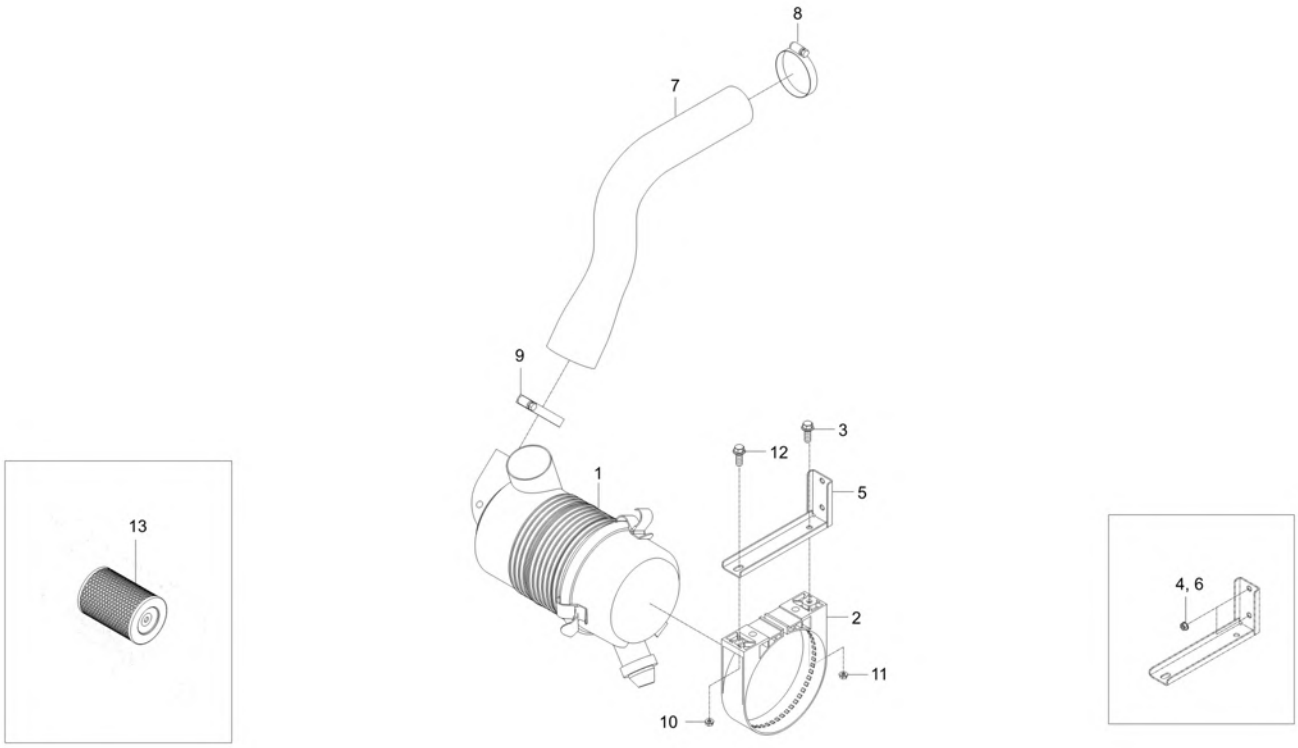

A : DK6010HSE

No.	Part Number	Description	Qty A	Qty B	Qty C	Qty D	Qty E	I.C	Remark
1	T5270-11011	ASSY CLEANER,AIR sp v	1						
2	T5245-11021	HOLDER AIR CLEANER v	1						
3	01123-50830	BOLT, WASHER v	2						M8P1.25*30
4	02763-50080	FLANGE NUT	2						M8XP1.25
5	TD26-0153A	BRACKET,AIR CLEANER	1						
6	02763-50080	FLANGE NUT	1						M8XP1.25
7	TD26-0154A	HOSE,SUCTION1	1						
8	T5710-58041	HOSE CLAMP	1						DIA 50-70
9	E7310-11782	CLAMP, HOSE v	1						#90
10	02763-50080	FLANGE NUT	1						M8XP1.25
11	41011-5151-4	NUT, LOCK (M8) v	1						
12	01754-50825	BOLT, FLANGE	1						M8XP1.25
13	T4710-11081	ELEMENT, FILTER ASS'Y OUTER	1						

----> Old replace New
<---- New replace Old
<-X-> Not interchangeable
<---> Interchangeable
<-O-> Interchangeable with another part(s)
* Please place an order assy(*)

https://tractormanualz.com/

TD2-G612512

RADIATOR GROUP

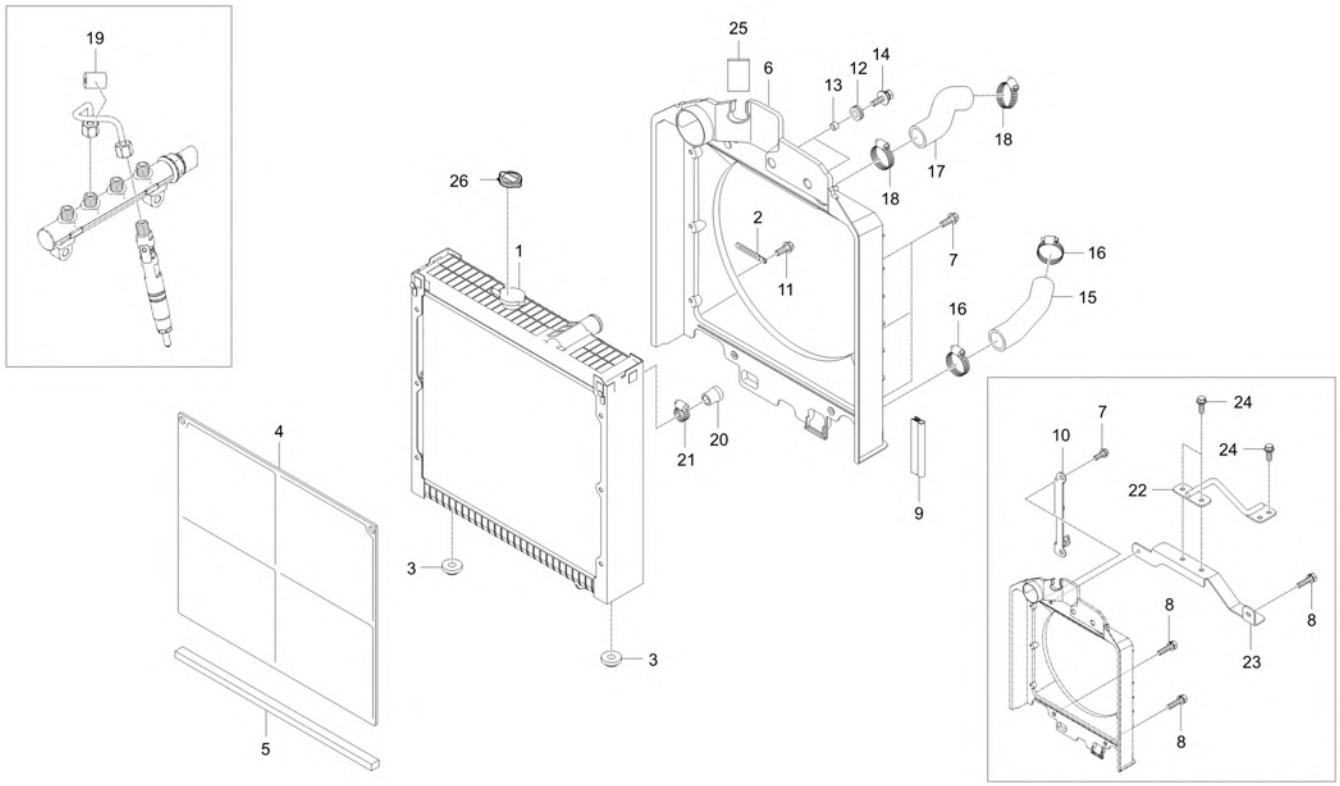

A : DK6010HSE

No.	Part Number	Description	Qty A	Qty B	Qty C	Qty D	Qty E	I.C	Remark
1	TD26-1188A	ASSY RADIATOR-OS	1						
2	37150-3447-1	WIR'G CLAMP	1						T0.5
3	T4125-13561	CUSHION	2						
4	T5525-50435	Net-Radiator	1						N
5	T5710-50502	SPONGE.RADIATOR	1						N
6	T5710-50424	SHROUD	1						-
7	T2185-70491	BOLT	4						
8	T4625-55441	BOLT FLANGE	4						
9	T5710-50492	RUBBER(RADIATOR)	2						
10	T5710-50461	BRACKET, RESERVOIR SUPPORT	1						N
11	T2185-70491	BOLT	2						
12	T2350-50431	GROMMET	2						
13	T2350-50421	SPACER	2						DIA13.8XT2.3
14	01127-50825	BOLT	2						
15	T5710-50481	HOSE, COOLING WATER LWR	1						OD44XT5.0
16	E1500-18411	CLAMP BAND	2						
17	TD26-0619B	HOSE,COOLINGWATER-UPR	1						OD44/ID34
18	E1500-18411	CLAMP BAND	2						

----> Old replace New <---- New replace Old <-X-> Not interchangeable
<---> Interchangeable <-O-> Interchangeable with another part(s)
* Please place an order assy(*)

https://tractormanualz.com/

TD2-G612512

RADIATOR GROUP

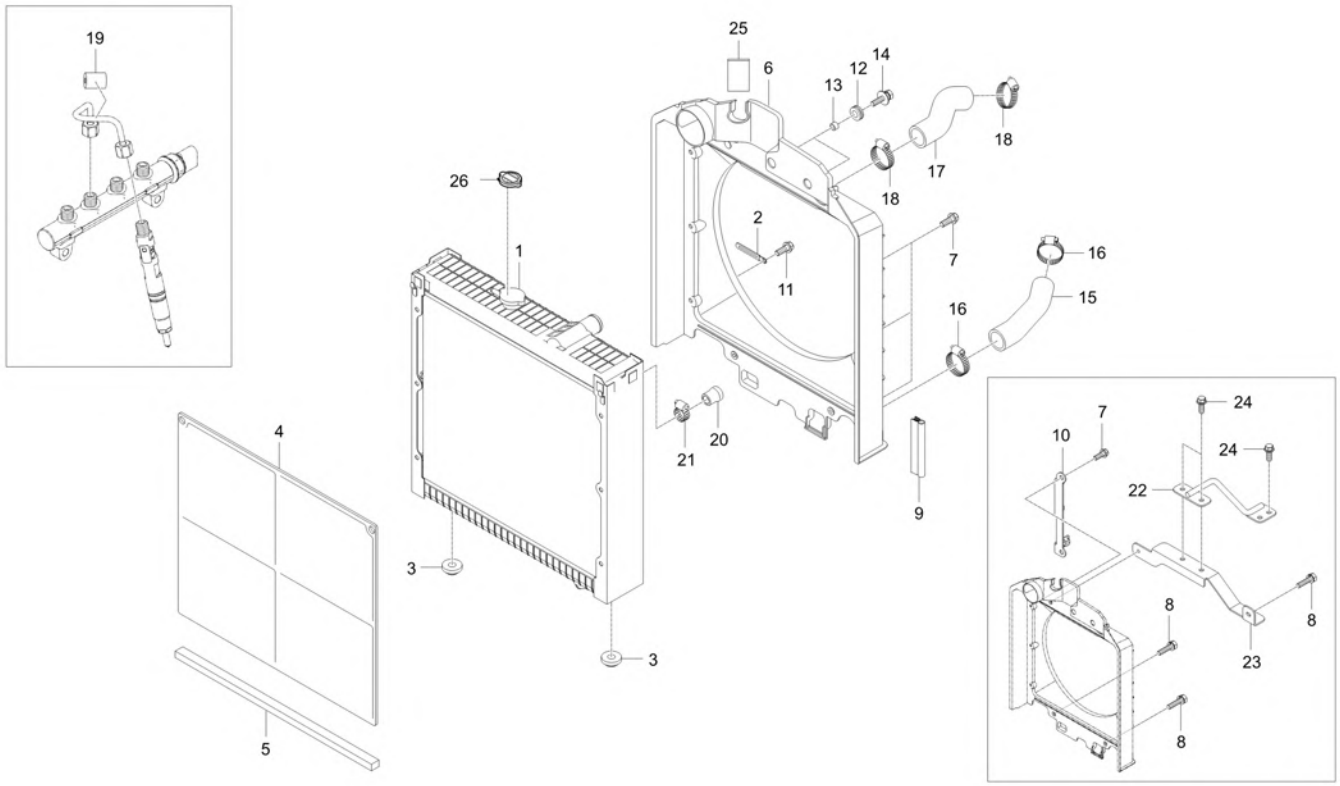

A : DK6010HSE

No.	Part Number	Description	Qty A	Qty B	Qty C	Qty D	Qty E	I.C	Remark
19	TD26-0008A	RING,RUBBER	1						
20	T5535-50451	CAP, SEALING	1						
21	66204-3623-1	BAND, HOSE	1						
22	T5716-50441	SUPPORT,RADIATOR	1						N
23	T5716-50431	BRACKET,RADIATOR	1						N
24	01754-50816	BOLT, FLANGE	4						M8XP1.25
25	T5245-50231	SPONGE	1						T5
26	U3215-77501	Radiator Cap	1						

----> Old replace New
<----> Interchangeable
* Please place an order assy(*)
<---- New replace Old
<-O-> Interchangeable with another part(s)
<-X-> Not interchangeable

https://tractormanualz.com/

TD2-G614502

FUEL COOLER GROUP

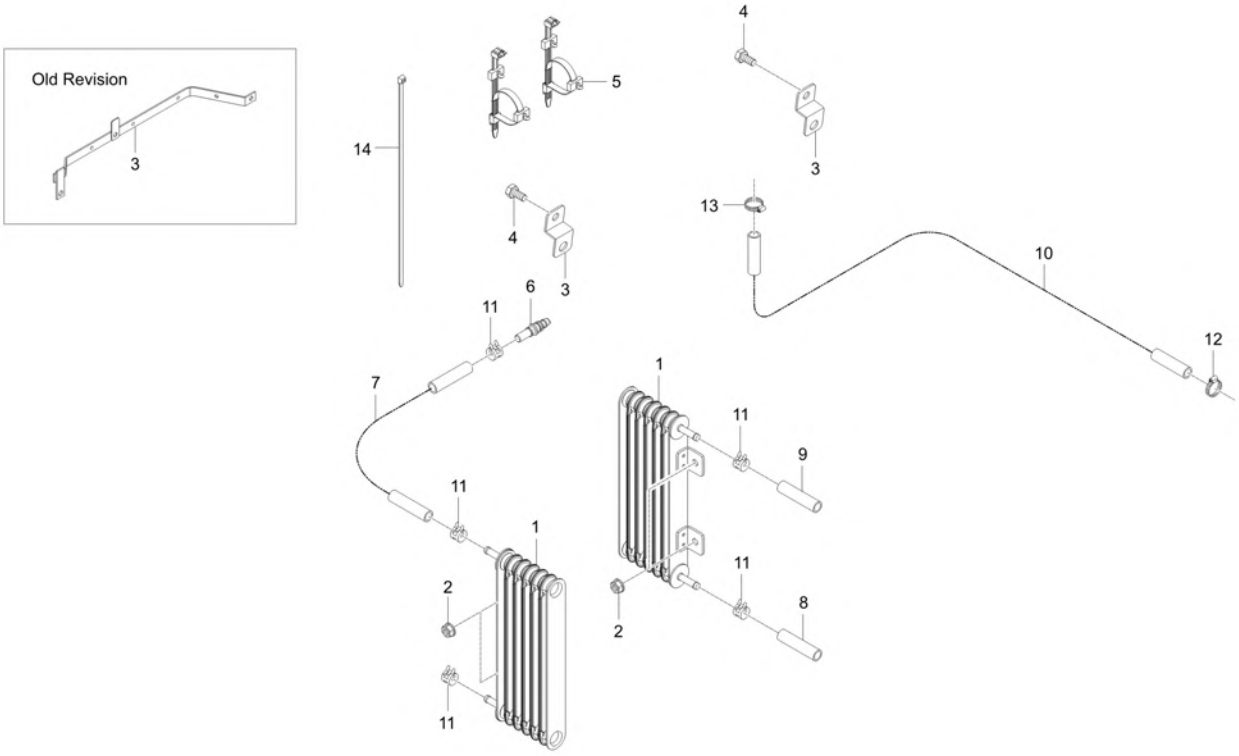

A : DK6010HSE

No.	Part Number	Description	Qty A	Qty B	Qty C	Qty D	Qty E	I.C	Remark
1	T5315-81251	FUEL COOLER	2						
2	02763-50080	FLANGE NUT	4						M8XP1.25
3	T5710-50841	GUIDE, HARNESS	1						N
3	T5250-68771	BRACKET	2 VGG700017 ~ VGG700028					<--O-->	
4	01125-50816	BOLT, WASHER	2						M8*P1.25
5	P5370-82551	BAND, CABLE	4 TGG700001 ~ VGG700016						
5	P5370-82551	BAND, CABLE	2					<--O-->	
6	F6800-16181	ADAPTER	1						OD8.4*ID4.7
7	TD26-0727A	HOSE,FUEL-1	1						OD12.8 / ID7
8	T5710-50831	HOSE 2, FUEL	1						OD14XID8
9	TD26-0728A	HOSE,FUEL-3	1						OD12.8 / ID7
10	TD26-0512A	HOSE,FUEL-4	1						-
11	09318-88130	CLAMP, HOSE	7						
12	T4810-67832	CLAMP	1						
13	F6800-91851	BAND, HOSE	1						12-22mm
14	T2185-82551	CABLE TIE, BLACK / 300	1						L290

----> Old replace New
<---> Interchangeable
<---- New replace Old
<-O-> Interchangeable with another part(s)
<-X-> Not interchangeable
* Please place an order assy(*)

https://tractormanualz.com/

TD2-G614506

FUEL COOLER GROUP

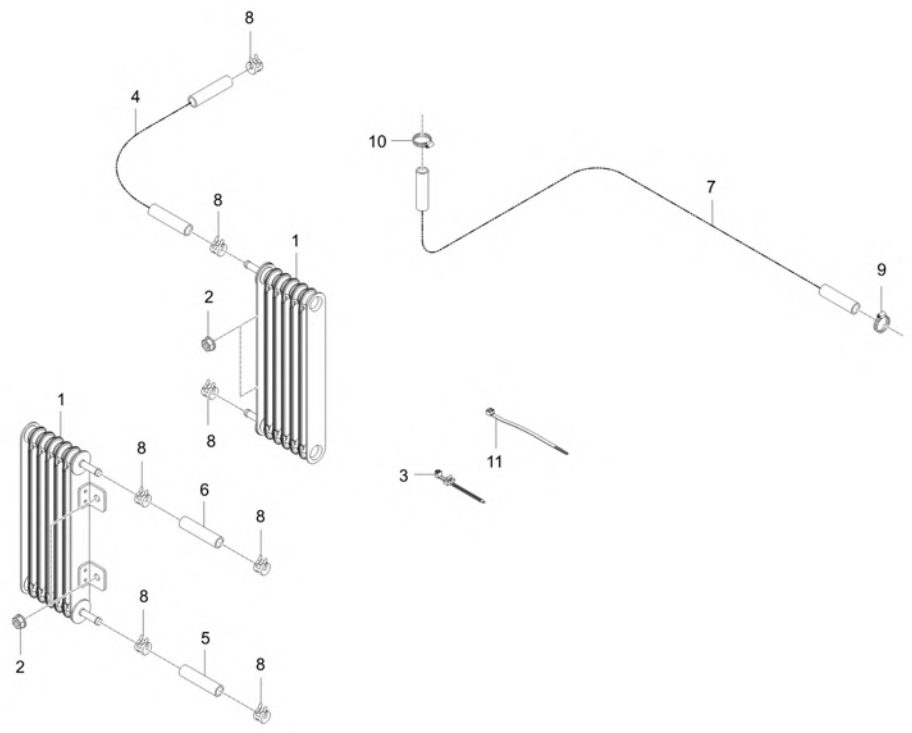

A : DK6010HSE

No.	Part Number	Description	Qty A	Qty B	Qty C	Qty D	Qty E	I.C	Remark
1	T5315-81251	FUEL COOLER	2						
2	02763-50080	FLANGE NUT	4						M8XP1.25
3	P5370-82551	BAND, CABLE	1						
4	TD26-1089A	HOSE, FUEL-1	1						OD14 / ID8
5	T5710-50831	HOSE 2, FUEL	1						OD14XID8
6	TD26-0728A	HOSE,FUEL-3	1						OD12.8 / ID7
7	TD26-0512A	HOSE,FUEL-4	1						-
7	TD26-0512B	HOSE, FUEL-4	1					<----->	-
8	09318-88130	CLAMP, HOSE	7						
9	T4810-67832	CLAMP	1						
10	F6800-91851	BAND, HOSE	1						12-22mm
11	T2185-82551	CABLE TIE, BLACK / 300	2						L290

----> Old replace New <---- New replace Old <-X-> Not interchangeable
<---> Interchangeable <-O-> Interchangeable with another part(s)
* Please place an order assy(*)

https://tractormanualz.com/

TD2-G615505

BONNET GROUP

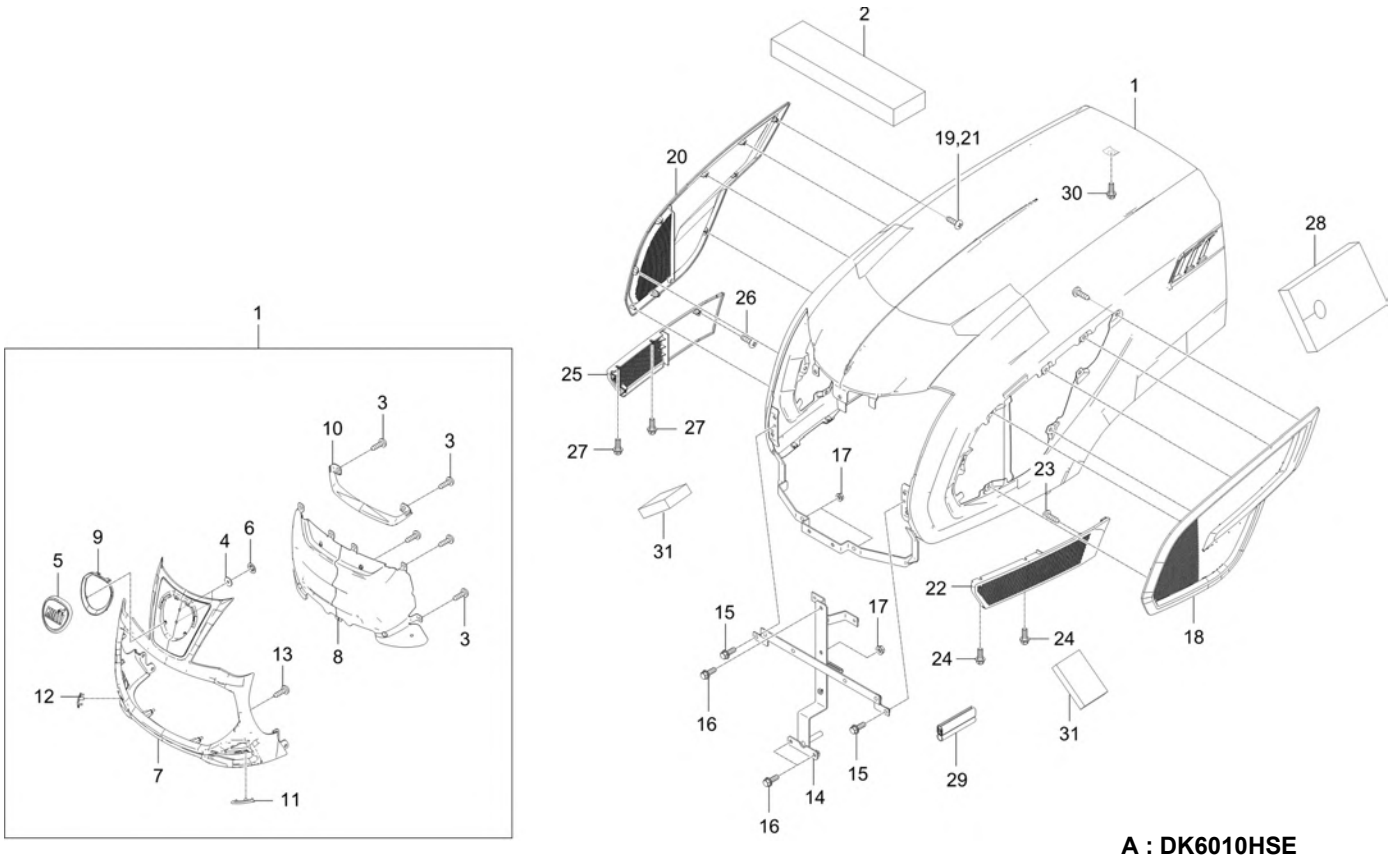

A : DK6010HSE

No.	Part Number	Description	Qty A	Qty B	Qty C	Qty D	Qty E	I.C	Remark
1	T5710-51014	BONNET ASSY dnr v	1 TGG700001 ~ VGG700028						-
1	T5710-51014OE	BONNET ASSY v	1					<------	-
2	T5710-51162	SPONGE	1 ~ VGG700028						N
2	TD26-1144A	SPONGE, BONNET	1 VGG700029 ~ WGG700024					<----->	-
3	38430-1827-1	SCREW	17						-
4	82KC-0641	PLATE, RUBBER	2						
5	T2185-51462	EMBLEM	1						
6	T4620-50701	PLATE, FIXED	2						
7	T5710-51072	GRILL, FRONT	1						-
8	T5710-51081	WIRE	1						T0.8
9	T5710-51092	BEGEL, EMBLEM	1						N
10	T5715-51131	COVER, FRONT GRILL	1						N
11	T5715-51141	COVER, FRONT GRILL	1						N
12	T5715-51151	COVER, FRONT GRILL	1						N
13	T5710-51181	SCREW	6						M5 X 10
14	TD26-0309A	PLATE,BONNETREINFMT-FR	1						
15	01754-50614	FLANGE BOLT	2						
16	01754-50816	BOLT, FLANGE	3						M8XP1.25

----> Old replace New
<----> Interchangeable
* Please place an order assy(*)
<---- New replace Old
<-O-> Interchangeable with another part(s)
<-X-> Not interchangeable

https://tractormanualz.com/

TD2-G615505

BONNET GROUP

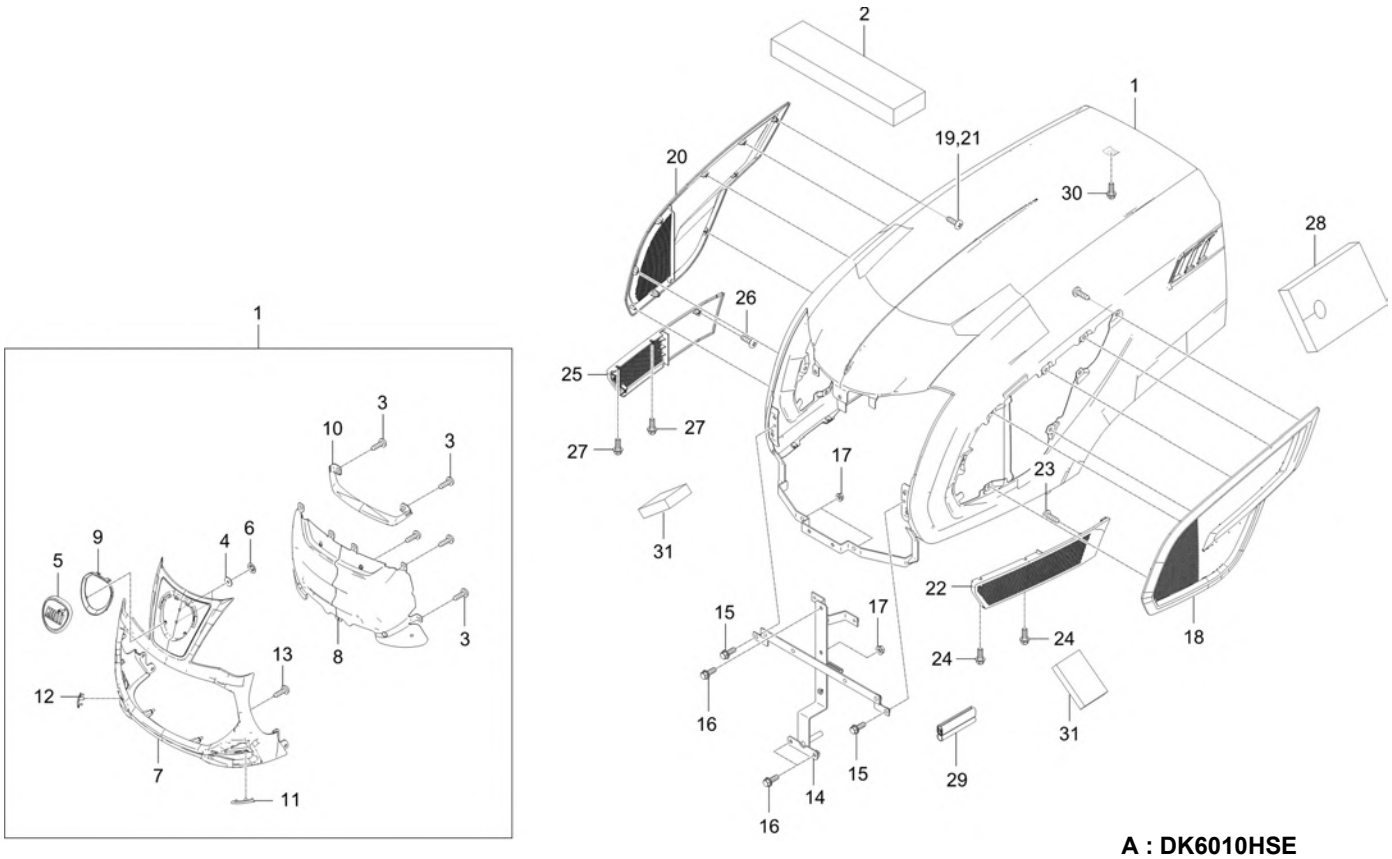

A : DK6010HSE

No.	Part Number	Description	Qty A	Qty B	Qty C	Qty D	Qty E	I.C	Remark
17	02761-50060	NUT, FLANGE	3						M6XP1.0
18	T5718-51032	SIDE GRILL,LH	1						T3.0
19	T5710-51181	SCREW	8						M5 X 10
20	T5718-51042	SIDE GRILL,RH	1						T3.0
21	T5710-51181	SCREW	8						M5 X 10
22	T5710-51053	SIDE GRILL, LH,LWR	1						T3.0
23	T5710-51181	SCREW	3						M5 X 10
24	01754-50614	FLANGE BOLT	2						
25	T5710-51063	SIDE GRILL, RH,LWR	1						T3.0
26	T5710-51181	SCREW	3						M5 X 10
27	01754-50614	FLANGE BOLT	2						
28	T4665-50382	PLATE,HEAT	1						
29	T5710-51102	RUBBER	1						
30	01754-50816	BOLT, FLANGE	1						M8XP1.25
31	T5855-50542	SPONGE, 4	2						<F6>□<F>95 X60, T2

----> Old replace New
<----> Interchangeable
* Please place an order assy(*)
<---- New replace Old
<-O-> Interchangeable with another part(s)
<-X-> Not interchangeable

https://tractormanualz.com/

TD2-G631010

ROPS BAR GROUP

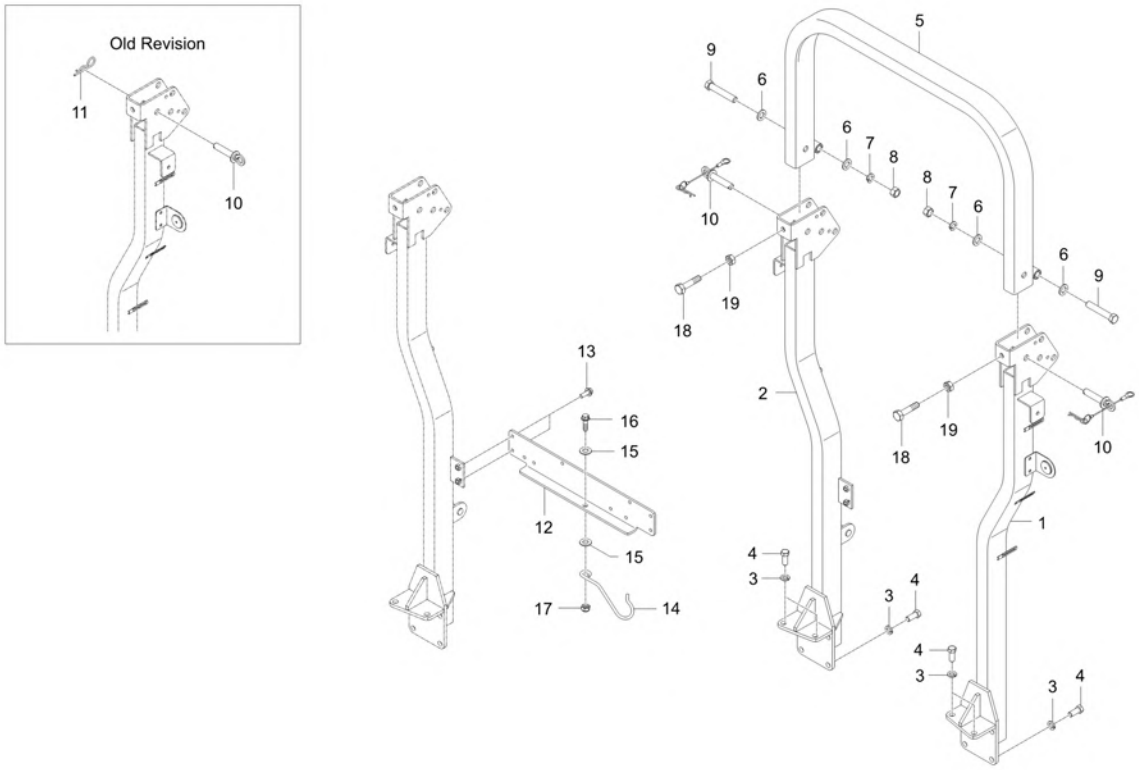

A : DK6010HSE

No.	Part Number	Description	Qty A	Qty B	Qty C	Qty D	Qty E	I.C	Remark
1	T5715-55236	SUPPORT, LH	1						-
1	T5715-55237	SUPPORT, LH	1					<----->	-
2	T5715-55257	SUPPORT,RH	1						-
2	T5715-55258	SUPPORT, RH	1					<----->	-
3	04512-50140	SPRING WASHER	10						
4	T2230-85242	BOLT	10						M14*2.0*32
5	TD26-0916A	ASSYROPS	1						-
5	TD26-0916B	ASSY ROPS	1					<----->	-
6	04011-50160	PLAIN WASHER	4						M16
7	04512-50160	WASHER, SPRING	2						M16
8	02176-50160	NUT v	2						M16*P1.5
9	01173-51690	BOLT	2						
10	T2185-97153	PIN, SET B(ROPS)	2						
10	TC26-1717B	PIN, ROPS FIXING	2					<------	-
11	05515-51600	PIN, SNAP	2						
12	T5710-55274	SUPPORT	1						T6.0
13	01135-51025	BOLT WITH WASHER	4						M8*1.25
14	T5410-48081	CLIP,TOP LINK	1						

----> Old replace New
<---- New replace Old
<-X-> Not interchangeable
<---> Interchangeable
<-O-> Interchangeable with another part(s)
* Please place an order assy(*)

https://tractormanualz.com/

TD2-G631010

ROPS BAR GROUP

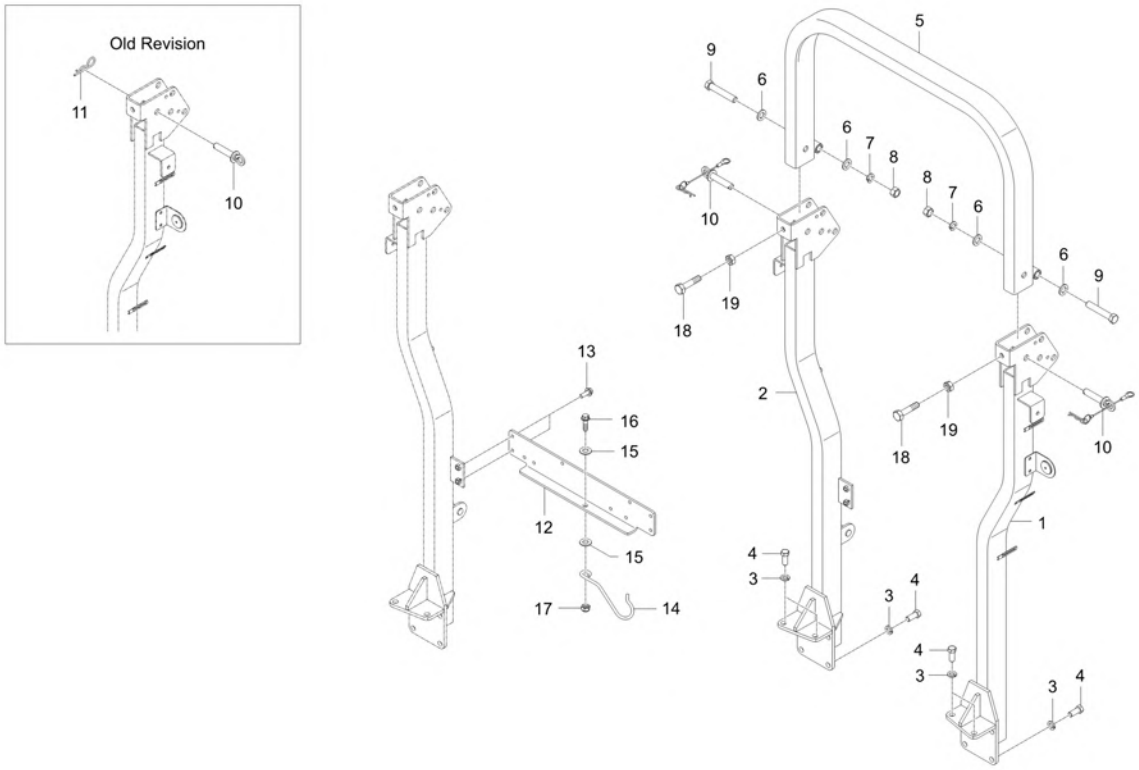

A : DK6010HSE

No.	Part Number	Description	Qty A	Qty B	Qty C	Qty D	Qty E	I.C	Remark
15	04013-50100	PLAIN WASHER	2						M10
16	01774-51030	FLANGE BOLT	1						
17	41182-5151-1	NUT, REMOVE CHECK	1						DIA10
18	02114-50120	NUT	2						M12*P1.75
19	T5710-55311	BOLT	2						M12XP1.75

----> Old replace New
<----> Interchangeable
* Please place an order assy(*)
<---- New replace Old
<-O-> Interchangeable with another part(s)
<-X-> Not interchangeable

https://tractormanualz.com/

TD2-G633007

STEP SEAT FRAME GROUP

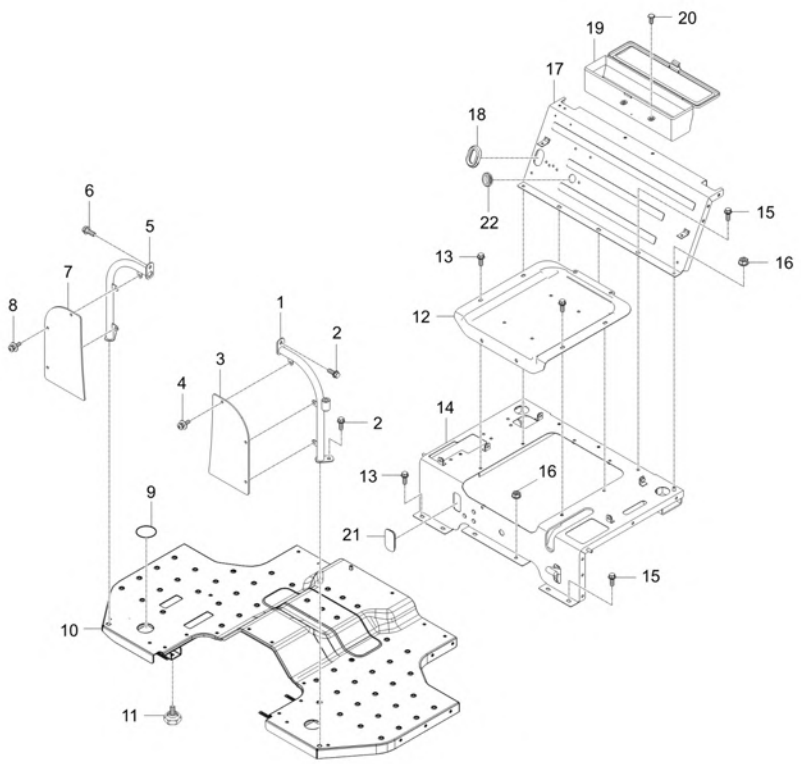

A : DK6010HSE

No.	Part Number	Description	Qty A	Qty B	Qty C	Qty D	Qty E	I.C	Remark
1	T5715-51871	Frame LH	1						-
2	01754-50816	BOLT, FLANGE	2						M8XP1.25
3	T5710-51892	PLATE	1						T4.0
4	53650-6127-1	RIVET	3						
5	T5710-51881	Frame RH	1						
6	01754-50816	BOLT, FLANGE	2						M8XP1.25
7	T5710-51892	PLATE	1						T4.0
8	53650-6127-1	RIVET	3						
9	T4686-51951	COVER	2						
10	TD26-0393A	ASSYFLOOR	1						-
10	TD26-0393B	ASSY FLOOR	1 UGG700105 ~ VGG700016					<--O-->	-
10	TD26-0393C	ASSY FLOOR	1					<----->	-
10	TD26-0393D	ASSY FLOOR	1 VGG700017 ~ VGG700028					<------	-
10	TD26-0393DOE	ASSY FLOOR	1					<------	-
10	TD26-0393E	ASSY FLOOR	1					<----->	-
11	T5710-51951	STOPPER	2						N
12	T5710-52022	SUPPORT,SEAT	1 ~ VGG700016						-
12	TD26-1095A	PLATE, SEAT SUPPORT	1 VGG700017 ~ WGG700024					<--O-->	T2.0

----> Old replace New <---- New replace Old <-X-> Not interchangeable
<---> Interchangeable <-O-> Interchangeable with another part(s)
* Please place an order assy(*)

https://tractormanualz.com/

TD2-G633007

STEP SEAT FRAME GROUP

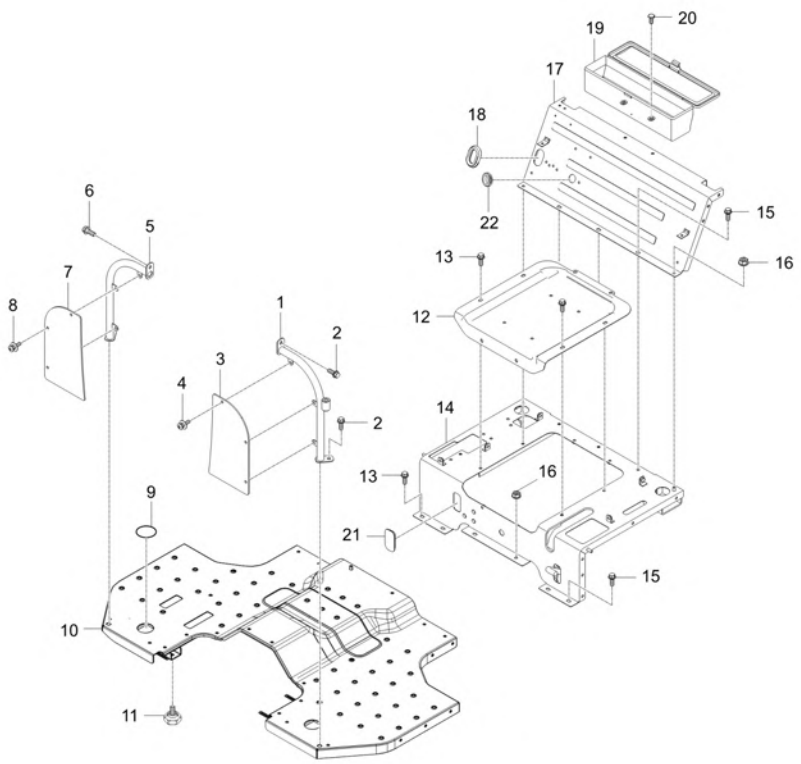

A : DK6010HSE

No.	Part Number	Description	Qty A	Qty B	Qty C	Qty D	Qty E	I.C	Remark
13	01754-50816	BOLT, FLANGE	8						M8XP1.25
14	TD26-0407A	ASSYPLATE,SEATFLOOR	1						-
15	01754-50816	BOLT, FLANGE	9						M8XP1.25
16	02751-50080	FLANGE NUT 8MMX1.25P	2						M8XP1.25
17	T5710-52036	SEAT FLOOR ASSY, RR	1 ~ VGG700016						-
17	T5710-52037	SEAT FLOOR ASSY, RR	1					<----->	-
17	T5718-52037	SEAT FLOOR ASSY, RR	1 VGG700017 ~ WGG700024					<--O-->	-
18	T5710-50031	GROMMET	1						N
19	T4930-70493	BOX, TOOL	1						-
20	01125-50820	BOLT, WASHER	2						M8XP1.25
21	T4630-65281	COVER	1						
22	T2198-70471	GROMMET	1						

----> Old replace New
<---- New replace Old
<-X-> Not interchangeable
<---> Interchangeable
<-O-> Interchangeable with another part(s)
* Please place an order assy(*)

https://tractormanualz.com/

TD2-G647602

HST CONTROL GROUP

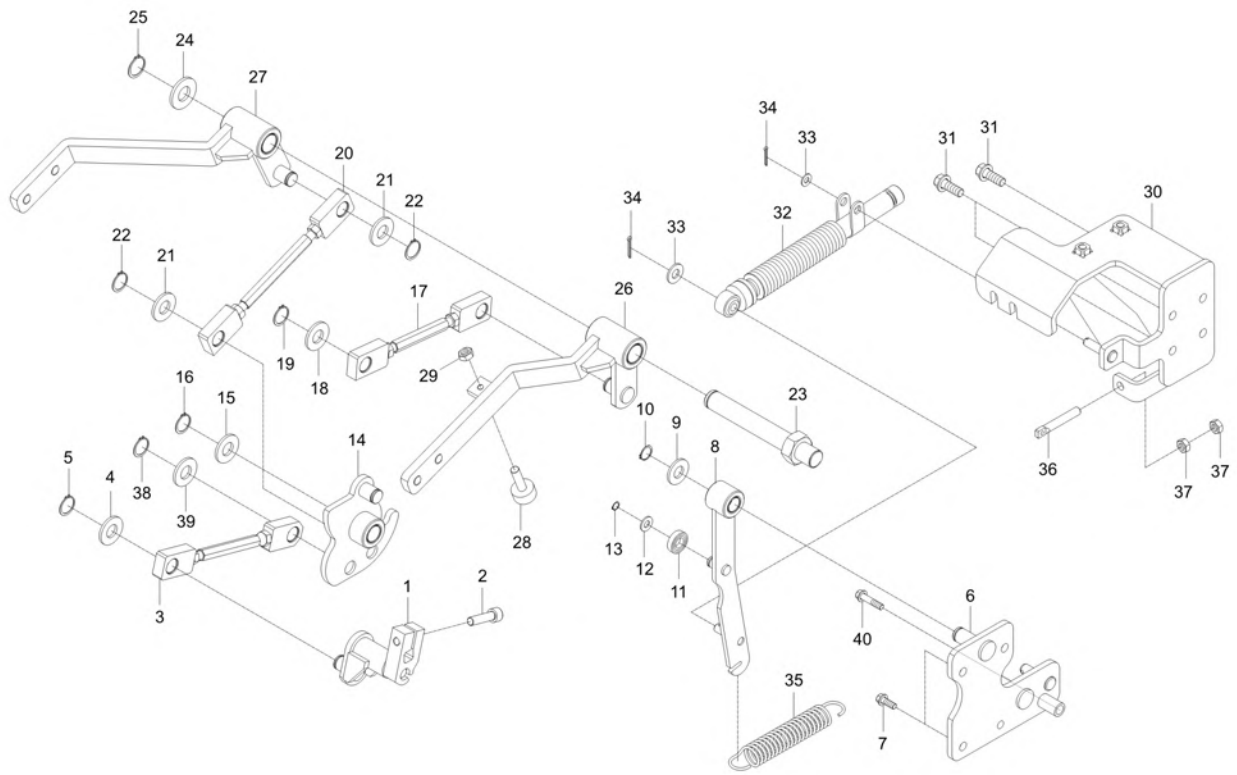

A : DK6010HSE

No.	Part Number	Description	Qty A	Qty B	Qty C	Qty D	Qty E	I.C	Remark
1	TD26-0260A	LEVER,HSTSHIFT	1						
2	T2610-39252	BOLT	1						M8*1.25
3	TD26-0291A	ROD,CONNECTINGHST4	1						
4	04011-50140	WASHER, PLAIN	1						T2.6
5	04612-00140	RING,SNAP	1						
6	TD26-0239A	LINK,INTERLOCKINGHST	1						
7	01123-50822	WASHER BOLT	4						M8XP1.25
8	TD26-0269A	LEVER,CONNECTINGHST	1						
9	04011-50140	WASHER, PLAIN	1						T2.6
10	04612-00140	RING,SNAP	1						
11	08141-06200	BEARING(NCX)	1						
12	04011-50100	PLAIN WASHER	1						M10
13	04612-00100	RING,SNAP	1						
14	TD26-0230A	CONTROLLER,HST	1						
15	04011-50160	PLAIN WASHER	1						M16
16	04612-00160	SNAP RING v	1						
17	TD26-0224A	ROD,CONNECTINGHST2	1						
18	04011-50140	WASHER, PLAIN	2						T2.6

----> Old replace New <---- New replace Old <-X-> Not interchangeable
<---> Interchangeable <-O-> Interchangeable with another part(s)
* Please place an order assy(*)

https://tractormanualz.com/

TD2-G647602

HST CONTROL GROUP

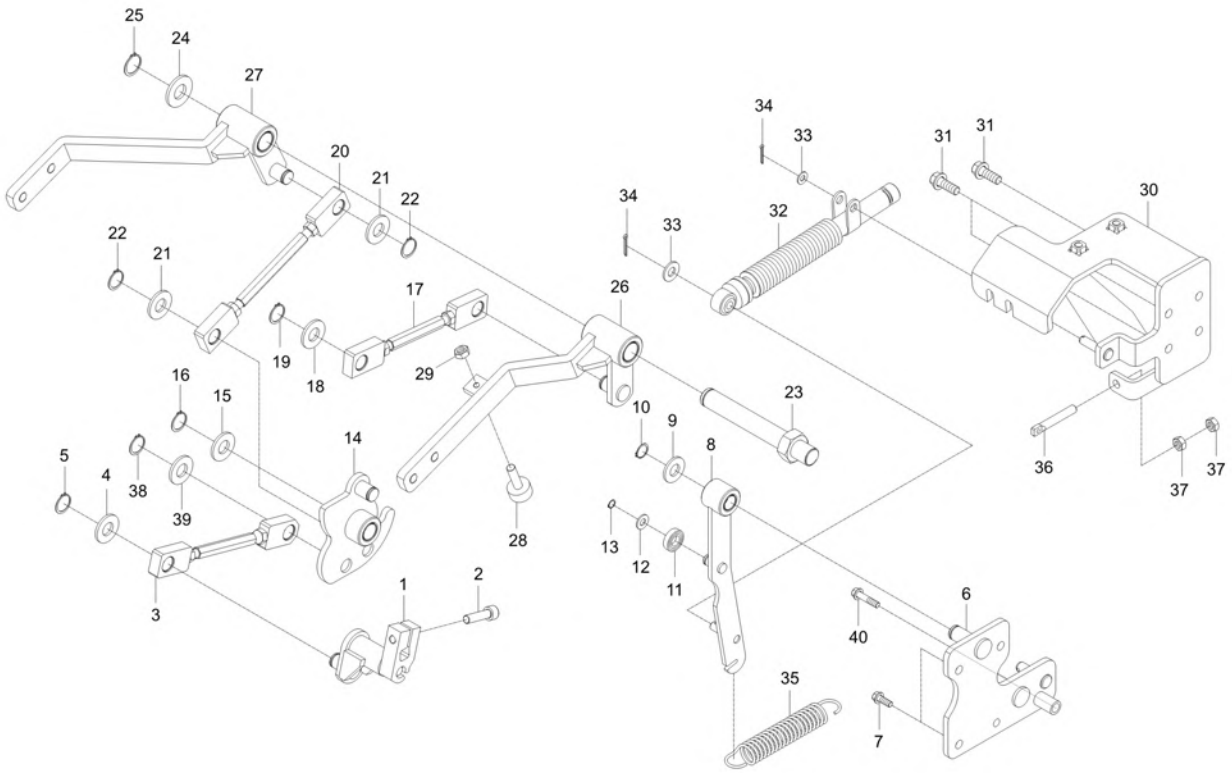

A : DK6010HSE

No.	Part Number	Description	Qty A	Qty B	Qty C	Qty D	Qty E	I.C	Remark
19	04612-00140	RING,SNAP	2						
20	TD26-0287A	ROD,CONNECTINGHST3	1						
21	04011-50140	WASHER, PLAIN	2						T2.6
22	04612-00140	RING,SNAP	2						
23	T4125-33171	SHAFT,STAY PEDAL	1						
24	04011-50180	PLAIN WASHER	1						T2.9
25	04612-00180	SNAP RING	1						
26	TD26-0277A	PEDAL,HST-LH	1						
27	TD26-0243A	PEDAL,HST-RH	1						
28	T2350-55881	BOLT ADJUSTING	1						
29	02156-50080	NUT v	1						M8XP1.25
30	TD26-0210B	BRACKET,STOPPER	1						
31	01123-50822	WASHER BOLT	4						M8XP1.25
32	P5370-32511	ASSY DEMPER dnr v	1						
33	04013-50080	PLAIN WASHER	2						M8
34	05511-50220	PIN, SPLIT	2						DIA1.8XL20
35	T4520-26161	SPRING, BRAKE	1						DIA2.5
36	T4125-33241	BOLT, TENSION ADJUST	1						

----> Old replace New
<----> Interchangeable
* Please place an order assy(*)
<---- New replace Old
<-O-> Interchangeable with another part(s)
<-X-> Not interchangeable

https://tractormanualz.com/

TD2-G647602

HST CONTROL GROUP

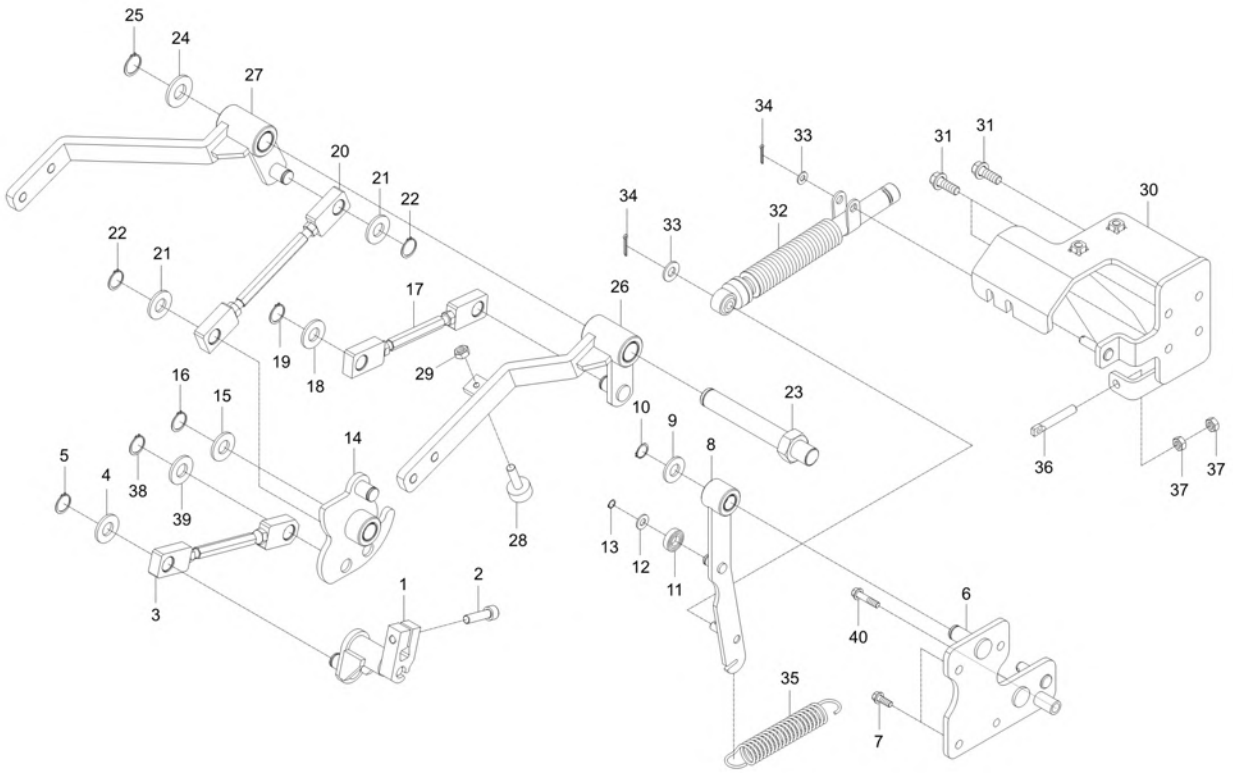

A : DK6010HSE

No.	Part Number	Description	Qty A	Qty B	Qty C	Qty D	Qty E	I.C	Remark
37	02156-50080	NUT v	2						M8XP1.25
38	04612-00140	RING,SNAP	1						
39	04011-50140	WASHER, PLAIN	1						T2.6
40	01123-50840	BOLT	1						M8*P1.25-40

----> Old replace New
<---- New replace Old
<-X-> Not interchangeable
<---> Interchangeable
<-O-> Interchangeable with another part(s)
* Please place an order assy(*)

https://tractormanualz.com/

TD2-G661010

SEAT GROUP

(DK6010HSE : VGG700017 ~)

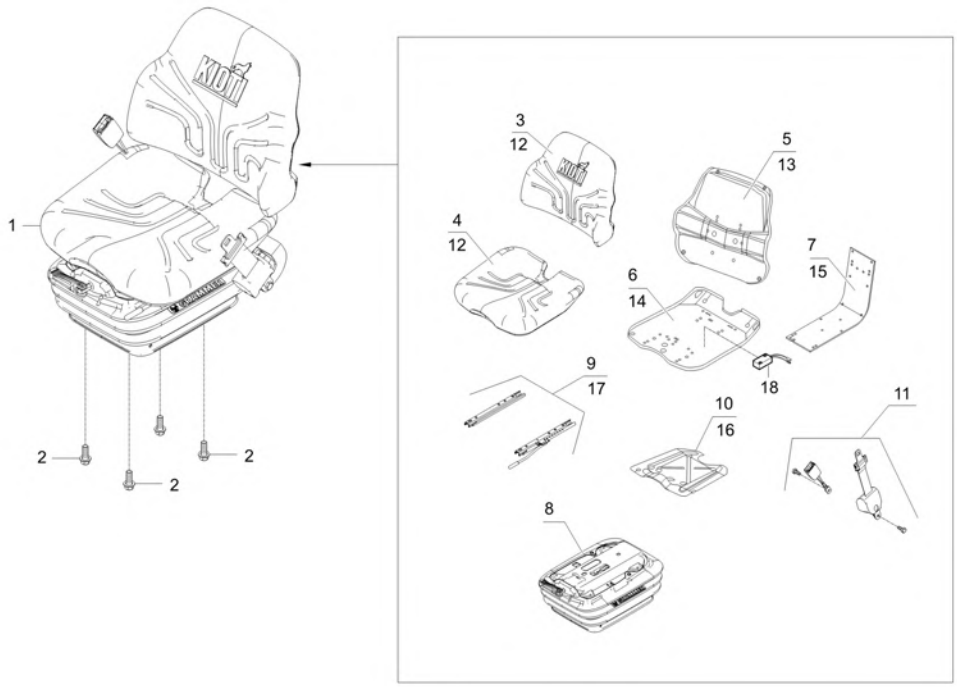

A : DK6010HSE

No.	Part Number	Description	Qty A	Qty B	Qty C	Qty D	Qty E	I.C	Remark
1	TC26-1718A	ASSY SEAT	1						
1	TC26-1718B	ASSY SEAT	1					<------	
1	TC26-1718C	ASSY SEAT	1					<------	
2	01754-50816	BOLT, FLANGE	4						M8XP1.25
3	TC26-1769A	CUSHION, BACK-CPL	1						
3	TC26-1769B	CUSHION, BACK-CPL	1					<------	
4	TC26-1772A	CUSHION-SEAT CPL	1						
5	TC26-1773A	SEAT, BACK-CPL	1						
6	TC26-1774A	SEAT-PAN CPL	1						
6	TC26-1774B	SEAT-PAN CPL	1					<------	
7	TC26-1776A	SEAT, BACK-CPL	1						
8	TC26-1778A	SUSPENSION-MSG283 CPL	1						
9	TC26-1780A	RAIL, SLIDE-CPL	1						
10	TC26-1781A	SWITCH-SEAT CPL	1						
11	TC26-1784A	BELT, SEAT-CPL	1						
12	TC26-1786A	FASTENER-BACKREST CUSHION CPL	1						
13	TC26-1787A	FASTENER-BACKREST CPL	1						
14	TC26-1788A	FASTENER-SEAT PAN CPL	1						

----> Old replace New
<---- New replace Old
<-X-> Not interchangeable
<---> Interchangeable
<-O-> Interchangeable with another part(s)
* Please place an order assy(*)

https://tractormanualz.com/

TD2-G661010

SEAT GROUP

(DK6010HSE : VGG700017 ~)

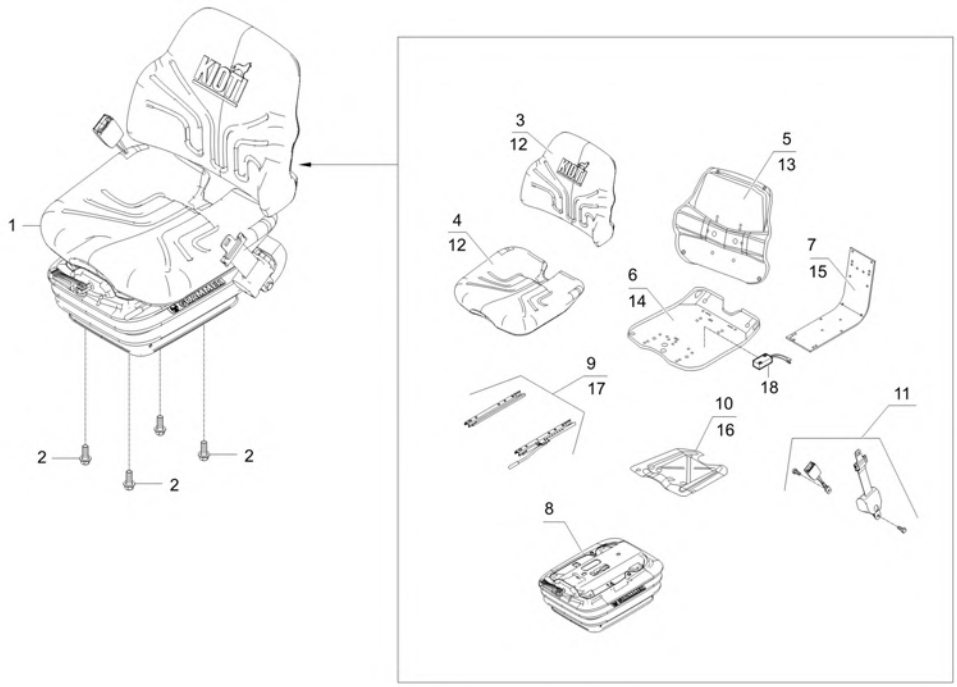

A : DK6010HSE

No.	Part Number	Description	Qty A	Qty B	Qty C	Qty D	Qty E	I.C	Remark
15	TC26-1789A	FASTENER-BACKREST CPL	1						
16	TC26-1790A	FASTENER-SEAT SWITCH CPL	1						
17	TC26-1792A	FASTENER-SLIDE RAIL CPL	1						
18	TC26-1834A	SWITCH-SEAT	1						

----> Old replace New
<----> Interchangeable
* Please place an order assy(*)
<---- New replace Old
<-O-> Interchangeable with another part(s)
<-X-> Not interchangeable

https://tractormanualz.com/

TD2-G692004

DRAWBAR GROUP

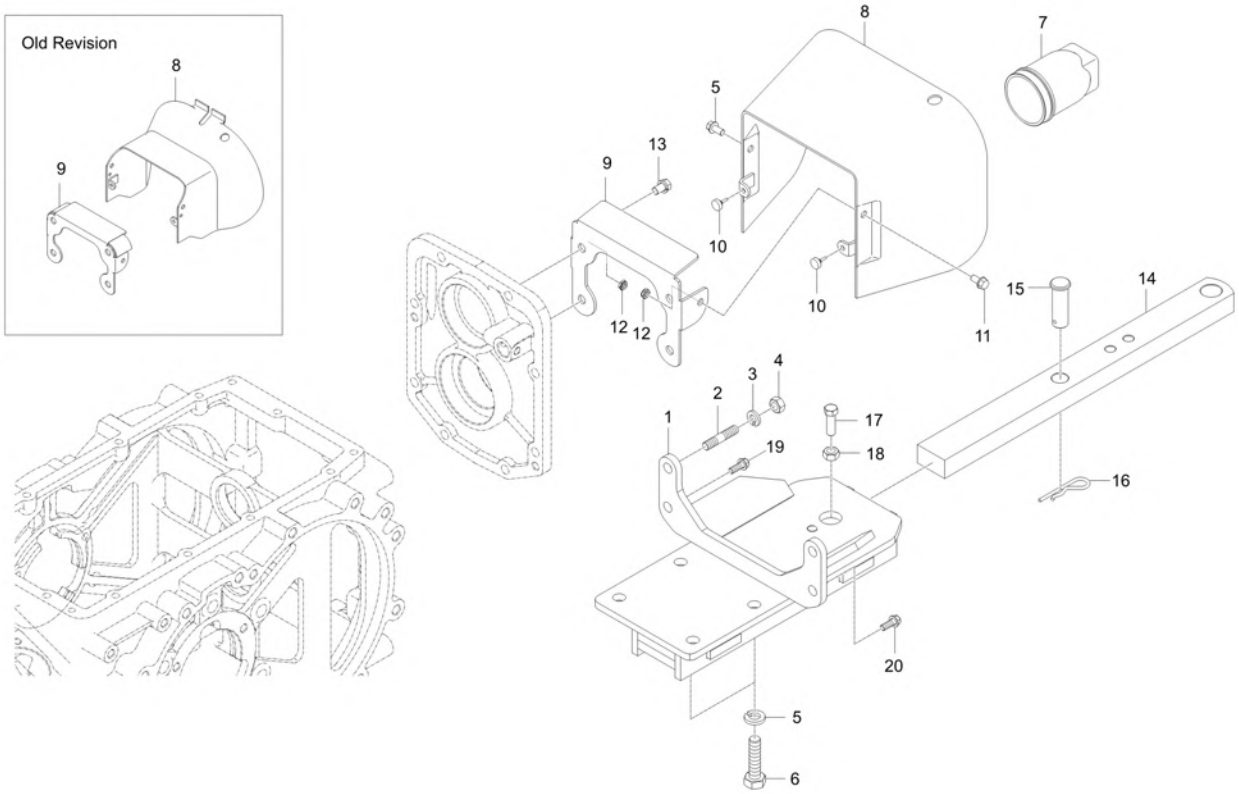

A : DK6010HSE

No.	Part Number	Description	Qty A	Qty B	Qty C	Qty D	Qty E	I.C	Remark
1	TD26-0903A	FRAME,DRAWBER-60HP	1						-
2	01574-51230	STUD	2						
3	04512-50120	SPRING WASHER	2						M12
4	02176-50120	NUT	2						M12XP1.25
5	04512-50140	SPRING WASHER	4						
6	01173-51435	BOLT v	4						M14XP1.5
7	T2181-25442	COVER, PTO SHAFT v	1						
8	T5715-55021	COVER, PTO	1						
8	TC26-1689A	COVER, PTO PROTECTION	1					<--O-->	
9	T5715-55011	BRACKET	1						
9	TC26-1690A	BRACKET, PTO PROTECTION COVER	1					<--O-->	T3.2
10	K9100-50241	CHSSING	2						
11	01754-50816	BOLT, FLANGE	2						M8XP1.25
12	41011-5151-4	NUT, LOCK (M8) v	2						
13	01133-51016	BOLT	4						M10*P1.25
14	TD26-0151A	DRAWBAR v	1						
15	T2445-29781	PIN,JOINT	1						DIA25
16	70515-1633-4	SNAP PIN	1						DIA5.0

----> Old replace New
<----> Interchangeable
* Please place an order assy(*)
<---- New replace Old
<-O-> Interchangeable with another part(s)
<-X-> Not interchangeable

https://tractormanualz.com/

TD2-G692004

DRAWBAR GROUP

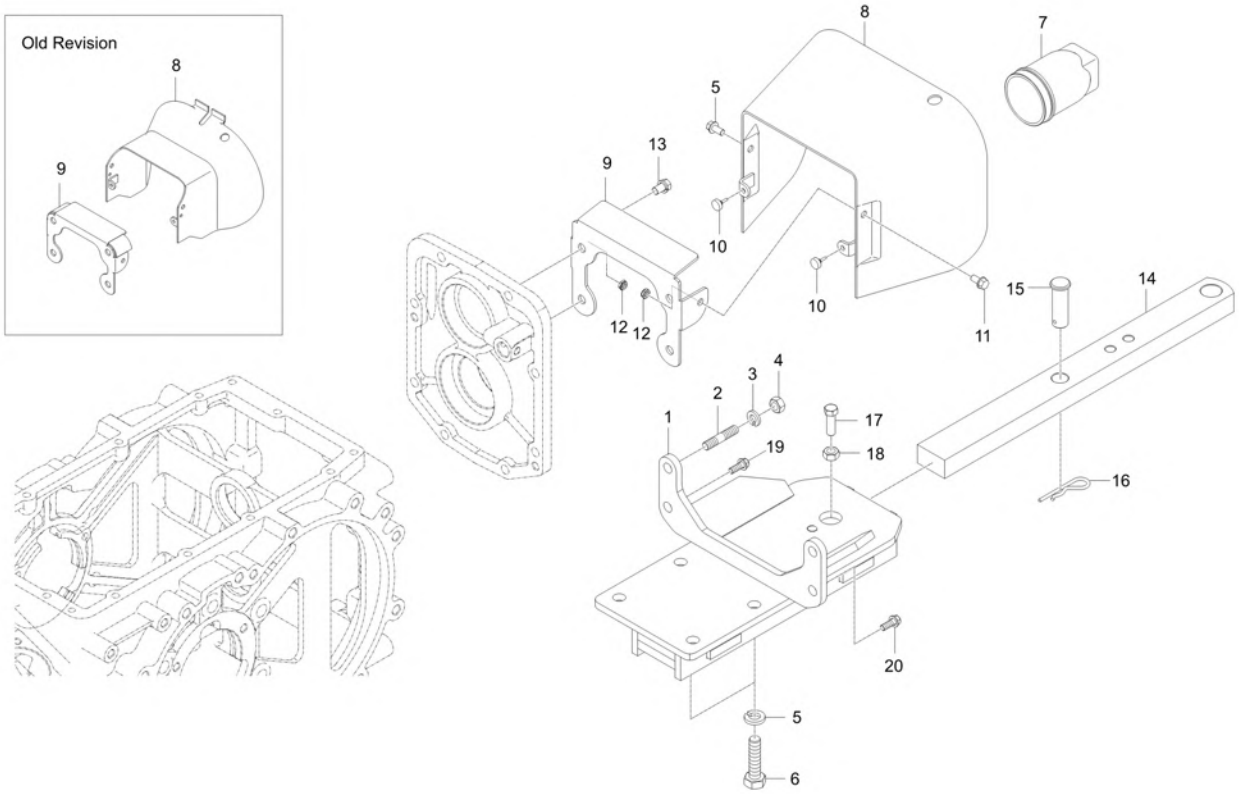

A : DK6010HSE

No.	Part Number	Description	Qty A	Qty B	Qty C	Qty D	Qty E	I.C	Remark
17	01173-51230	BOLT v	1						M12P1.25*30
18	02176-50120	NUT	1						M12XP1.25
19	01133-51230	WASHER BOLT	1						M12*P1.25
20	01133-51230	WASHER BOLT	1						M12*P1.25

----> Old replace New
<----> Interchangeable
* Please place an order assy(*)
<---- New replace Old
<-O-> Interchangeable with another part(s)
<-X-> Not interchangeable

https://tractormanualz.com/

TD2-G611211 AIR CLEANER SUPPORT GROUP

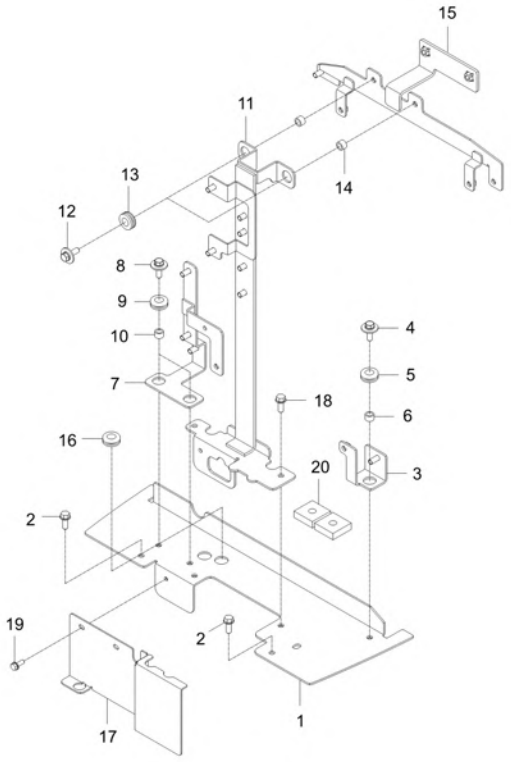

A : DK6010HSE

No.	Part Number	Description	Qty A	Qty B	Qty C	Qty D	Qty E	I.C	Remark
1	TD26-0163C	BRACKET,AIRCLEANER SUPPORTv	1 UGG700001 ~ UGG700072						
1	TD26-0163D	BRACKET, AIR CLEANER SUPPORT v	1 UGG700073 ~ WGG700024					<----->	
2	01754-50820	BOLT, FLANGE	3 UGG700001 ~ UGG700044						M8XP1.25
2	T2185-70491	BOLT	2 UGG700045 ~ WGG700024					<------	
3	TD26-0168B	BRACKET,HOLDER v	1						
4	01127-50825	BOLT	1						
5	T2350-50431	GROMMET	1						
6	T2350-50421	SPACER	1						DIA13.8XT2.3
7	TD26-0170B	BRACKET,HOLDER v	1						
8	01127-50825	BOLT	2						
9	T2350-50431	GROMMET	2						
10	T2350-50421	SPACER	2						DIA13.8XT2.3
11	TD26-0173A	PLATE,INTERCEPTION	1						
12	01127-50825	BOLT	2						
13	T2350-50431	GROMMET	2						
14	T2350-50421	SPACER	2						DIA13.8XT2.3
15	TD26-0164A	SUPPORT,CONDENSER	1						
16	T2350-50431	GROMMET	2						

----> Old replace New <---- New replace Old <-X-> Not interchangeable
<---> Interchangeable <-O-> Interchangeable with another part(s)
* Please place an order assy(*)

https://tractormanualz.com/

TD2-G611211

AIR CLEANER SUPPORT GROUP

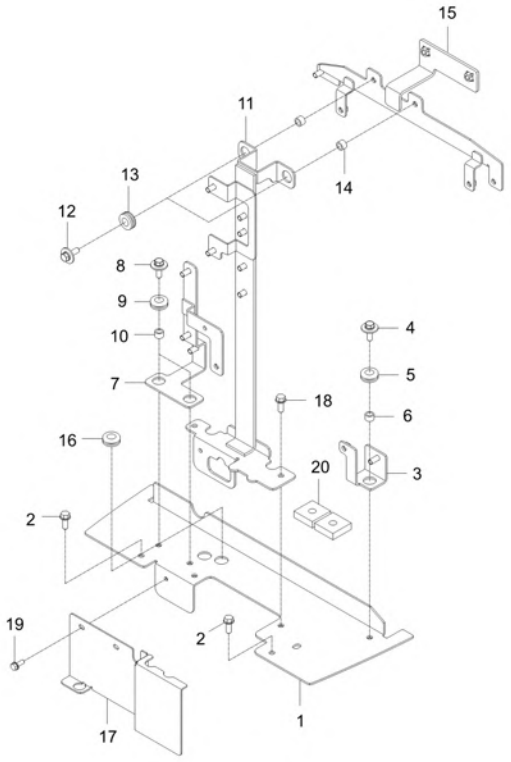

A : DK6010HSE

No.	Part Number	Description	Qty A	Qty B	Qty C	Qty D	Qty E	I.C	Remark
17	TD26-0184A	PLATE,INTERCEPTION	1						
18	01754-50820	BOLT, FLANGE	2						M8XP1.25
19	01754-50616	BOLT, FLANGE v	2						M6*P1.0
20	T2360-37552	SPONGE	2						

----> Old replace New <---- New replace Old <-X-> Not interchangeable
<---> Interchangeable <-O-> Interchangeable with another part(s)
* Please place an order assy(*)

https://tractormanualz.com/

TD2-G612002

MUFFLER GROUP

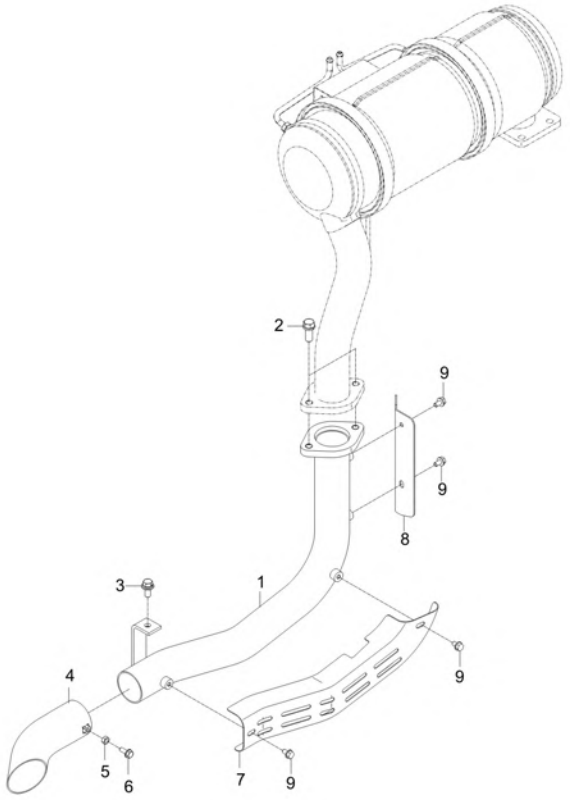

A : DK6010HSE

No.	Part Number	Description	Qty A	Qty B	Qty C	Qty D	Qty E	I.C	Remark
1	T5710-50221	TUBE, EXHAUST	1						N
2	01133-51025	BOLT	2						M10XP1.25
3	01125-50820	BOLT, WASHER	1						M8XP1.25
4	T5710-50231	TUBE 2, EXHAUST	1						N
5	02056-50060	NUT	1						M6*P1.0
6	T4625-55431	FLANGE BOLT	1						
7	T5710-50252	PROTECTION COVER	1						T1.2
8	T5710-50263	PROTECTION COVER	1						T2.0
8	T5710-50264	PROTECTION COVER,RR	1					<------	T2.0
9	01025-50612	WASHER BOLT	4						M6P1.0

----> Old replace New
<---> Interchangeable
* Please place an order assy(*)
<---- New replace Old
<-O-> Interchangeable with another part(s)
<-X-> Not interchangeable

https://tractormanualz.com/

TD2-G612506

RADIATOR GROUP(ROPS)

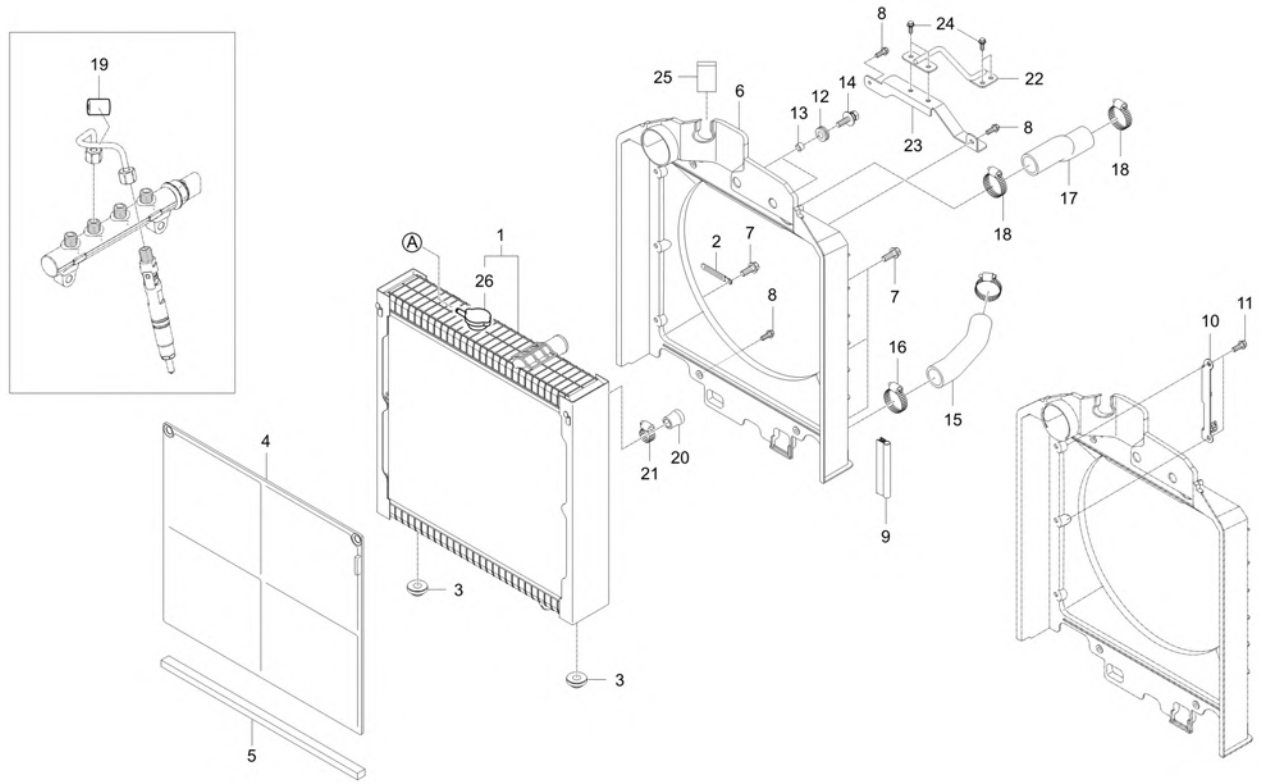

A : DK6010HSE

No.	Part Number	Description	Qty A	Qty B	Qty C	Qty D	Qty E	I.C	Remark
1	T5710-50411	RADIATOR ASSY	1						
1	T5710-50412	RADIATOR ASSY	1					<--O-->	
2	37150-3447-1	WIR'G CLAMP	1						T0.5
3	T4125-13561	CUSHION	2						
4	T5525-50435	Net-Radiator	1						N
5	T5710-50502	SPONGE.RADIATOR	1						N
6	T5710-50423	SHROUD v	1 UGG700001 ~ WGG700016						-
6	T5710-50424	SHROUD	1 WGG700017 ~ WGG700024					<----->	-
7	T2185-70491	BOLT	4						
8	T4625-55441	BOLT FLANGE	4						
9	T5710-50492	RUBBER(RADIATOR)	2						
10	T5710-50461	BRACKET, RESERVOIR SUPPORT	1						N
11	T2185-70491	BOLT	2						
12	T2350-50431	GROMMET	2						
13	T2350-50421	SPACER	2						DIA13.8XT2.3
14	01127-50825	BOLT	2						
15	T5710-50481	HOSE, COOLING WATER LWR	1						OD44XT5.0
16	E1500-18411	CLAMP BAND	2						

----> Old replace New
<---- New replace Old
<-X-> Not interchangeable
<---> Interchangeable
<-O-> Interchangeable with another part(s)
* Please place an order assy(*)

https://tractormanualz.com/

TD2-G612506

RADIATOR GROUP(ROPS)

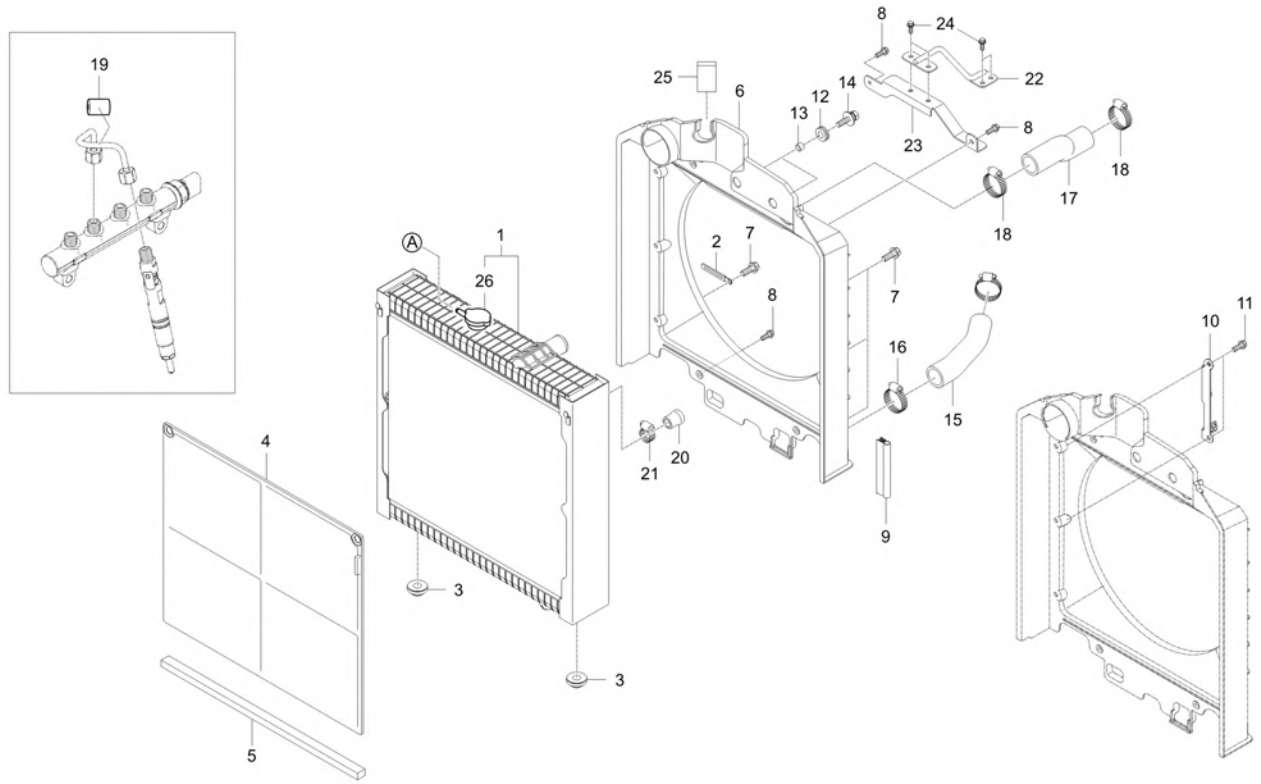

A : DK6010HSE

No.	Part Number	Description	Qty A	Qty B	Qty C	Qty D	Qty E	I.C	Remark
17	TD26-0619B	HOSE,COOLINGWATER-UPR	1						OD44/ID34
18	E1500-18411	CLAMP BAND	2						
19	TD26-0008A	RING,RUBBER	1						
20	T5535-50451	CAP, SEALING	1						
21	66204-3623-1	BAND, HOSE	1						
22	T5716-50441	SUPPORT,RADIATOR	1						N
23	T5716-50431	BRACKET,RADIATOR	1						N
24	01754-50816	BOLT, FLANGE	4						M8XP1.25
25	T5245-50231	SPONGE	1						T5
26	T4686-72161010	RADIATOR CAP use P15110900 dnr v	1						

----> Old replace New
<----> Interchangeable
* Please place an order assy(*)
<---- New replace Old
<-O-> Interchangeable with another part(s)
<-X-> Not interchangeable

https://tractormanualz.com/

TD2-G612701

COOLANT RESERVIOR GROUP

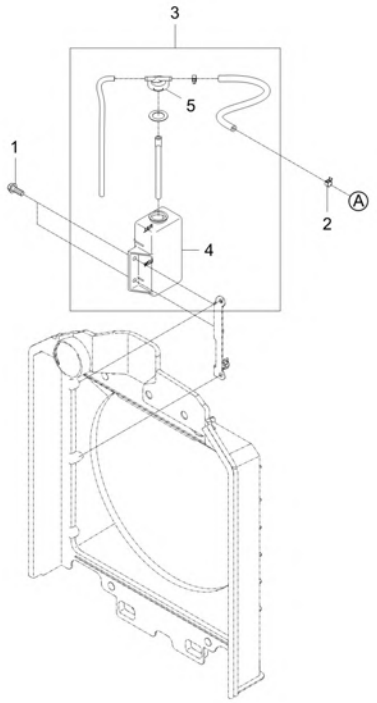

A : DK6010HSE

No.	Part Number	Description	Qty A	Qty B	Qty C	Qty D	Qty E	I.C	Remark
1	01754-50816	BOLT, FLANGE	2						M8XP1.25
2	14911-4275-1	CLIP, TUBE	1						T0.8*#12
3	T5710-50451	RESERVOIR ASSY	1						N
4	T2350-13612	TANK, WATER	1						
5	T5525-50721	CAP v	1						

----> Old replace New
<----> Interchangeable
* Please place an order assy(*)
<---- New replace Old
<-O-> Interchangeable with another part(s)
<-X-> Not interchangeable

https://tractormanualz.com/

TD2-G614504

FUEL COOLER GROUP

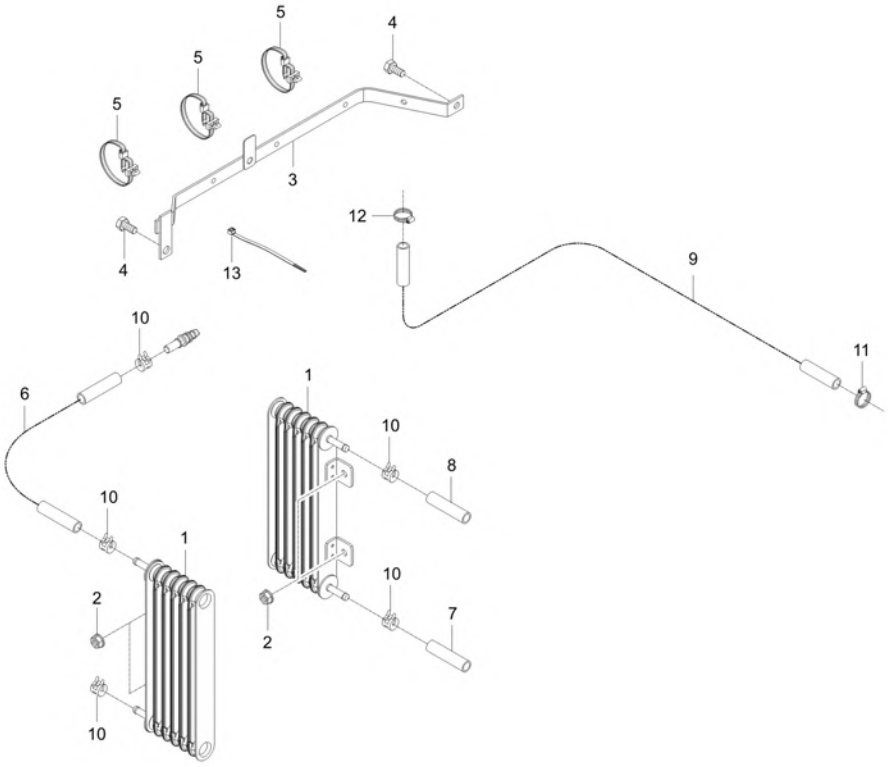

A : DK6010HSE

No.	Part Number	Description	Qty A	Qty B	Qty C	Qty D	Qty E	I.C	Remark
1	T5315-81251	FUEL COOLER	2						
2	02763-50080	FLANGE NUT	4						M8XP1.25
3	T5250-68771	BRACKET	2						
4	01125-50816	BOLT, WASHER	2						M8*P1.25
5	P5370-82551	BAND, CABLE	2						
6	TD26-1089A	HOSE, FUEL-1	1						OD14 / ID8
7	T5710-50831	HOSE 2, FUEL	1						OD14XID8
8	TD26-0728A	HOSE,FUEL-3	1						OD12.8 / ID7
9	TD26-0512A	HOSE,FUEL-4	1						-
9	TD26-0512B	HOSE, FUEL-4	1					<----->	-
10	09318-88130	CLAMP, HOSE	7						
11	T4810-67832	CLAMP	1						
12	F6800-91851	BAND, HOSE	1						12-22mm
13	T2185-82551	CABLE TIE, BLACK / 300	1						L290

----> Old replace New
<---- New replace Old
<-X-> Not interchangeable
<---> Interchangeable
<-O-> Interchangeable with another part(s)
* Please place an order assy(*)

https://tractormanualz.com/

TD2-G616006

BONNET SUPPORT GROUP

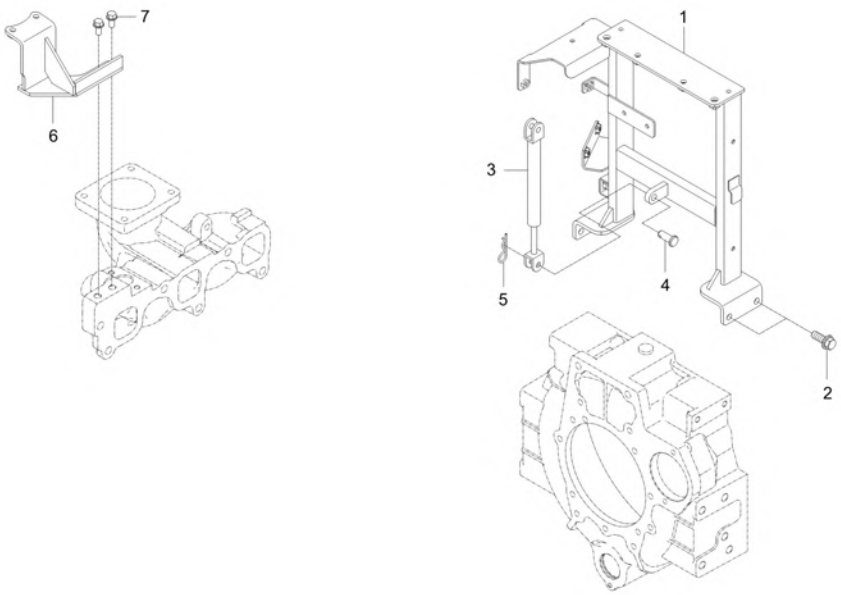

A : DK6010HSE

No.	Part Number	Description	Qty A	Qty B	Qty C	Qty D	Qty E	I.C	Remark
1	T5710-51114	SUPPORT ASSY, BONNET v	1						-
2	01133-51020	BOLT	4						M10XP1.25
3	T5710-51191	AIR CYLINDER	1						
4	05122-51025	JOINT PIN	1						DIA10*25
5	05515-51000	Split Pin	1						DIA10
6	F5830-16142	BRACKET,FUEL-FILTER	1						N
7	01754-50816	BOLT, FLANGE	2						M8XP1.25

----> Old replace New
<---- New replace Old
<-X-> Not interchangeable
<---> Interchangeable
<-O-> Interchangeable with another part(s)
* Please place an order assy(*)

https://tractormanualz.com/

TD2-G616103

BONNET LATCH GROUP

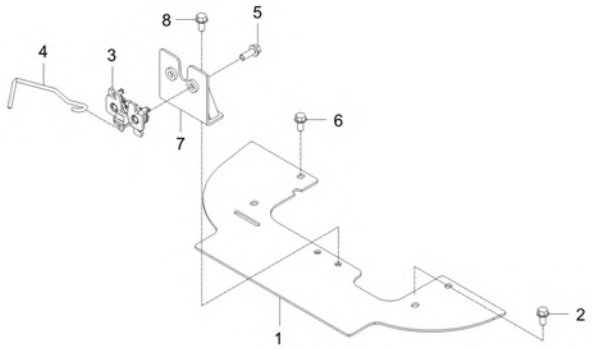

A : DK6010HSE

No.	Part Number	Description	Qty A	Qty B	Qty C	Qty D	Qty E	I.C	Remark
1	TD26-0246A	BRACKET,LATCH	1						
2	01754-50816	BOLT, FLANGE	2						M8XP1.25
3	T4145-60582	LATCH ASSY	1						
4	T5710-50061	ROD	1						DIA 5
5	01754-50820	BOLT, FLANGE	2						M8XP1.25
6	01754-50816	BOLT, FLANGE	2						M8XP1.25
7	T5710-50072	LATCH BRACKET v	1						N
8	01125-50820	BOLT, WASHER	2						M8XP1.25

----> Old replace New
<---- New replace Old
<-X-> Not interchangeable
<---> Interchangeable
<-O-> Interchangeable with another part(s)
* Please place an order assy(*)

https://tractormanualz.com/

TD2-G617003

BATTERY FIXING GROUP

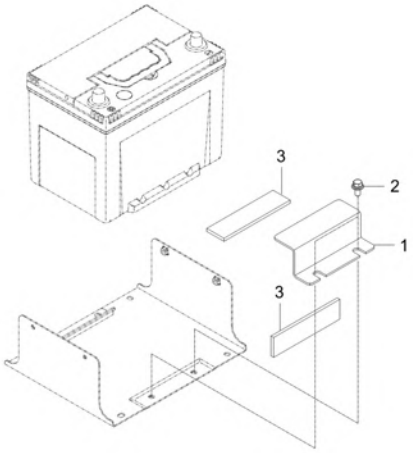

A : DK6010HSE

No.	Part Number	Description	Qty A	Qty B	Qty C	Qty D	Qty E	I.C	Remark
1	TD26-0300A	BRACKET,BATTERY	1						
1	TD26-0300B	BRACKET, BATTERY	1					<------	
1	TD26-0300C	BRACKET, BATTERY	1 UGG700001 ~ WGG700024					<------	
2	01754-50820	BOLT, FLANGE	2						M8XP1.25
3	T4157-50271	RUBBER, CUSHION	2						

----> Old replace New
<---> Interchangeable
* Please place an order assy(*)
<---- New replace Old
<-O-> Interchangeable with another part(s)
<-X-> Not interchangeable

https://tractormanualz.com/

TD2-G617205

ECU BRACKET GROUP

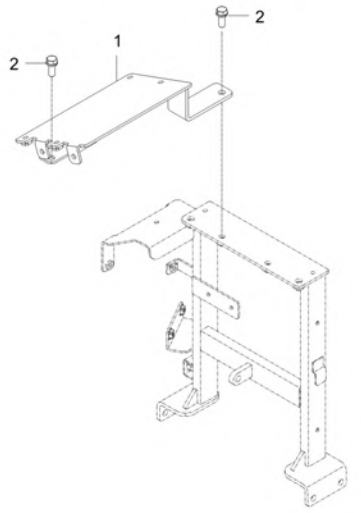

A : DK6010HSE

No.	Part Number	Description	Qty A	Qty B	Qty C	Qty D	Qty E	I.C	Remark
1	TD26-0930A	HOLDER, BONNET SUPPORT-ECU	1						-
2	01123-50820	BOLT, WASHER v	2						M8XP1.25

----> Old replace New
<---- New replace Old
<-X-> Not interchangeable
<---> Interchangeable
<-O-> Interchangeable with another part(s)
* Please place an order assy(*)

https://tractormanualz.com/

TD2-G621005

FRONT AXLE FRAME GROUP

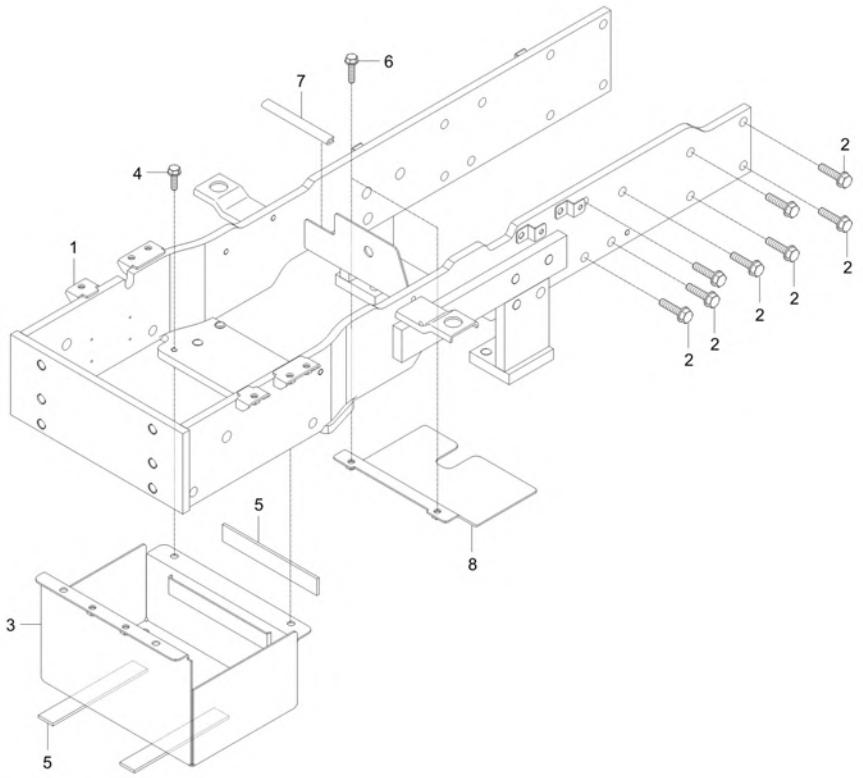

A : DK6010HSE

No.	Part Number	Description	Qty A	Qty B	Qty C	Qty D	Qty E	I.C	Remark
1	TD26-0279B	FRAME,FRONTAXLE	1						
2	01177-51235	BOLT v	16						M12XP1.25 (9T/스프링
3	TD26-0305A	SUPPORT,BATTERY	1						
4	01754-50820	BOLT, FLANGE	4						M8XP1.25
4	01754-50816	BOLT, FLANGE	4 UGG700001 ~ WGG700024					<------	M8XP1.25
5	T2610-50271	RUBBER, CUSHION v	3						
6	01123-50816	Hex Head Cap Screw	2						M8XP1.25
7	T5710-51251	U-SHAPED RUBBER	1						N
8	TD26-0833A	PLATE,WINDDIRECTION	1						-

----> Old replace New
<---> Interchangeable
* Please place an order assy(*)
<---- New replace Old
<-O-> Interchangeable with another part(s)
<-X-> Not interchangeable

https://tractormanualz.com/

TD2-G623003

CABIN SUPPORT GROUP

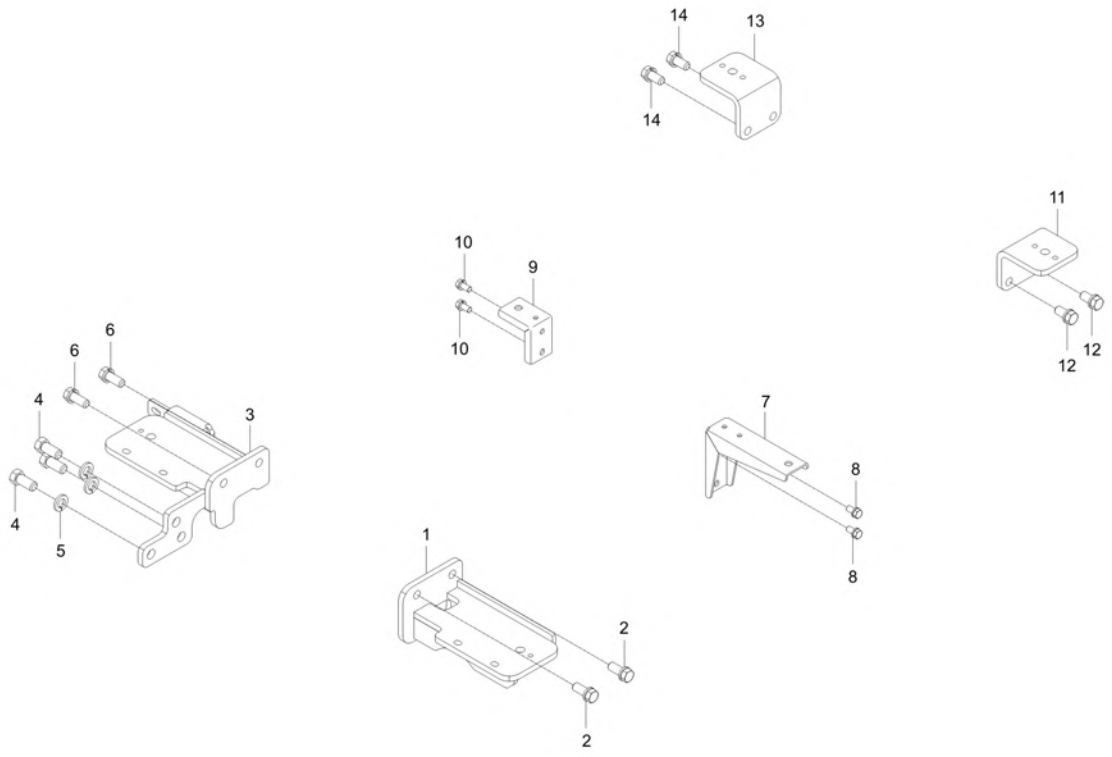

A : DK6010HSE

No.	Part Number	Description	Qty A	Qty B	Qty C	Qty D	Qty E	I.C	Remark
1	TD26-0323A	SUPPORT,STEP-LH	1						-
2	01133-51230	WASHER BOLT	3						M12*P1.25
3	TD26-0624C	SUPPORT,STEP-RH	1						-
4	01173-51430	BOLT	3						M14P1.5*30
5	04512-50140	SPRING WASHER	3						
6	01133-51230	WASHER BOLT	2						M12*P1.25
7	TD26-0325B	STEP,SUPPORTBRACKET-LH v	1						
8	01123-50816	Hex Head Cap Screw	2						M8XP1.25
9	T5710-51841	STEP SUPPORT BRACKET, RH	1						T3.0
10	01123-50816	Hex Head Cap Screw	2						M8XP1.25
11	T5710-52042	SEAT FLOOR SUPPORT	1						T9.0
12	01133-51225	BOLT, WASHER v	2						M12*P1.25
13	T5710-52042	SEAT FLOOR SUPPORT	1						T9.0
14	01133-51225	BOLT, WASHER v	2						M12*P1.25

----> Old replace New
<---- New replace Old
<-X-> Not interchangeable
<---> Interchangeable
<-O-> Interchangeable with another part(s)
* Please place an order assy(*)

https://tractormanualz.com/

TD2-G624001 VIBRATIONPROOF RUBBER GROUP

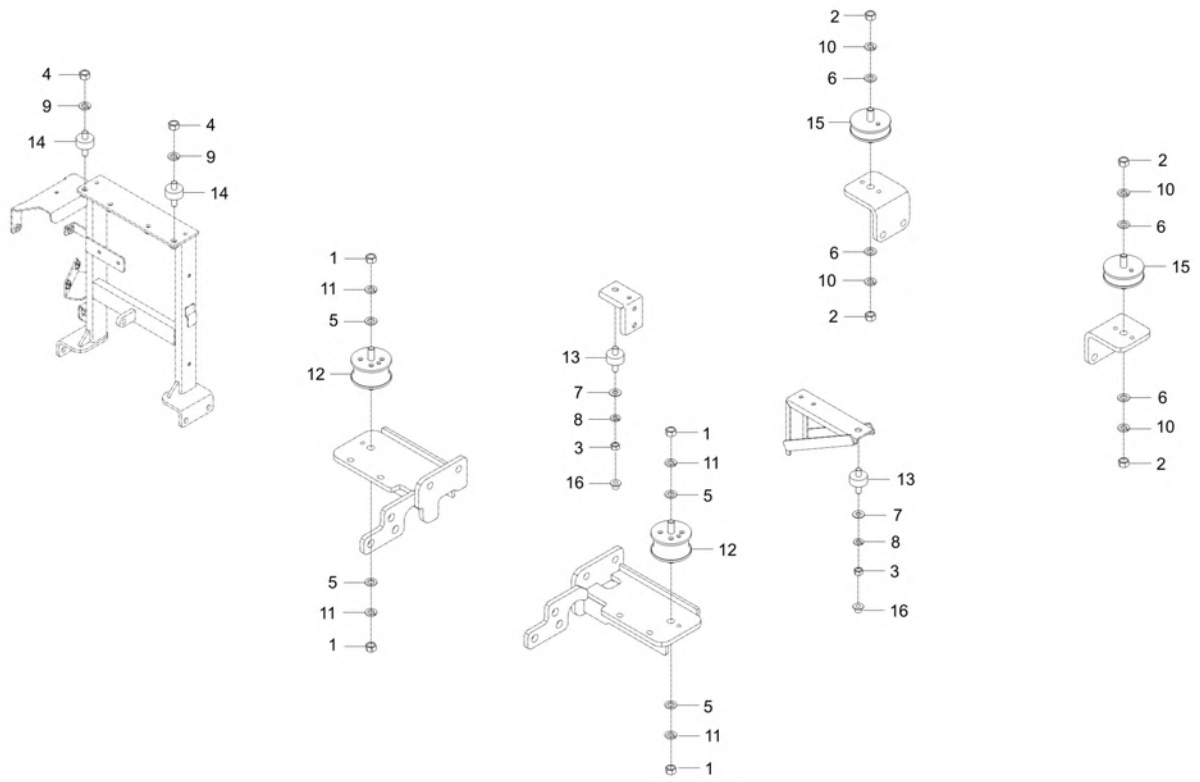

A : DK6010HSE

No.	Part Number	Description	Qty A	Qty B	Qty C	Qty D	Qty E	I.C	Remark
1	02076-50120	NUT	4						
2	02076-50120	NUT	4						
3	02176-50100	NUT v	2						M10XP1.25
4	02176-50100	NUT v	2						M10XP1.25
5	04011-50120	WASHER, PLAIN	4						M12
6	04011-50120	WASHER, PLAIN	4						M12
7	04013-50100	PLAIN WASHER	2						M10
8	04512-50100	SPRING WASHER	2						M10
9	04512-50100	SPRING WASHER	2						M10
10	04512-50120	SPRING WASHER	4						M12
11	04512-50120	SPRING WASHER	4						M12
12	T5410-70211	DUSTPROOF RUBBER	2						
13	T5520-80391	DUSTPROOF RUBBER	2						
14	T5520-80391	DUSTPROOF RUBBER	2						
15	T5710-52051	DUSTPROOF RUBBER	2						N
15	T5710-52052	DUSTPROOF RUBBER v	2 VGG700001 ~ WGG700024					<----->	-
16	32210-2758-1	PLUG	2						M12

----> Old replace New
<----> Interchangeable
* Please place an order assy(*)
<---- New replace Old
<-O-> Interchangeable with another part(s)
<-X-> Not interchangeable

https://tractormanualz.com/

TD2-G637003

LEVER GUIDE(ROPS) GROUP

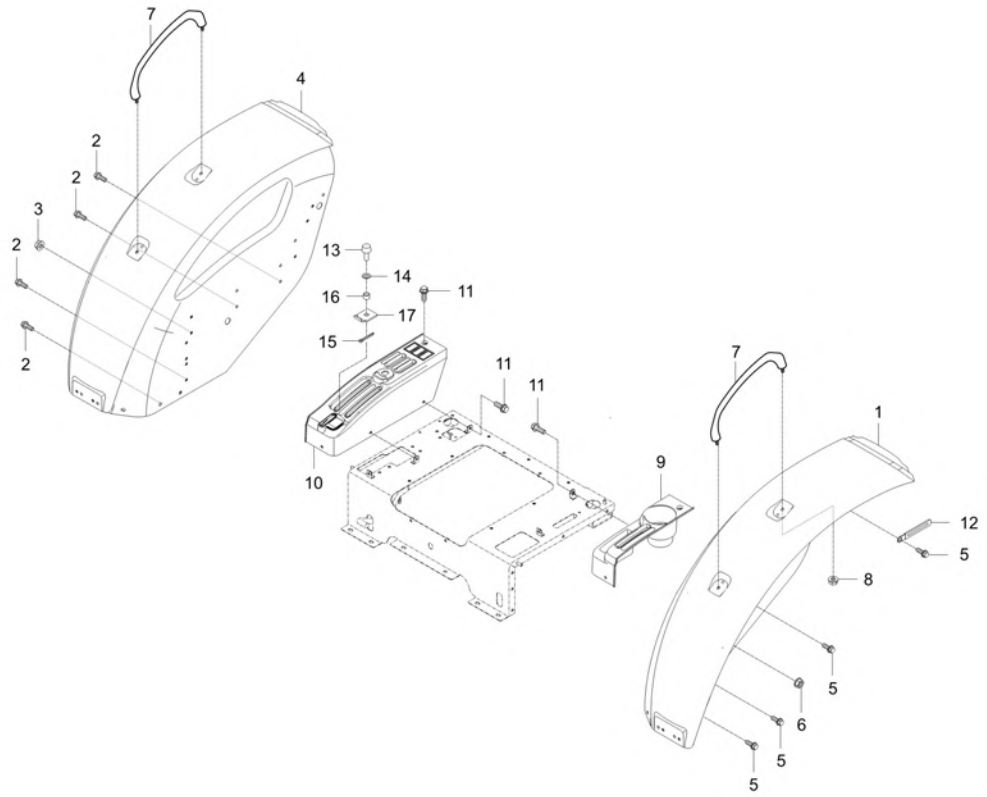

A : DK6010HSE

No.	Part Number	Description	Qty A	Qty B	Qty C	Qty D	Qty E	I.C	Remark
1	T5710-52615	TRK FENDER ASSY, LH v	1 UGG700001 ~ VGG700028						-
1	T5710-52615OE	FENDER ASSY LH	1					<------	-
2	01754-50816	BOLT, FLANGE	14						M8XP1.25
3	02751-50080	FLANGE NUT 8MMX1.25P	1						M8XP1.25
4	T5710-52624	FENDER ASSY RH	1 ~ VGG700028						-
4	T5710-52624OE	FENDER ASSY, RH	1					<------	-
5	01754-50816	BOLT, FLANGE	14						M8XP1.25
6	02751-50080	FLANGE NUT 8MMX1.25P	1						M8XP1.25
7	T2630-95052	GRIP	2						
8	02763-50080	FLANGE NUT	4						M8XP1.25
9	T5710-52653	LEVERGUIDE,LH	1						T3.0
10	T5710-52664	LEVER GUIDE, RH v	1						-
11	T4625-55431	FLANGE BOLT	7						
12	37150-3447-1	WIR'G CLAMP	2						T0.5
13	55571-3238-1	BOLT v	1						
14	04015-50060	WASHER, PLAIN	1						M6
15	05511-50215	PIN,SPLIT	1						DIA1.8XL15
16	T4520-83301	SPACER	1						DIA10.5*T2.0

----> Old replace New <---- New replace Old <-X-> Not interchangeable
<---> Interchangeable <-O-> Interchangeable with another part(s)
* Please place an order assy(*)

https://tractormanualz.com/

TD2-G637003

LEVER GUIDE(ROPS) GROUP

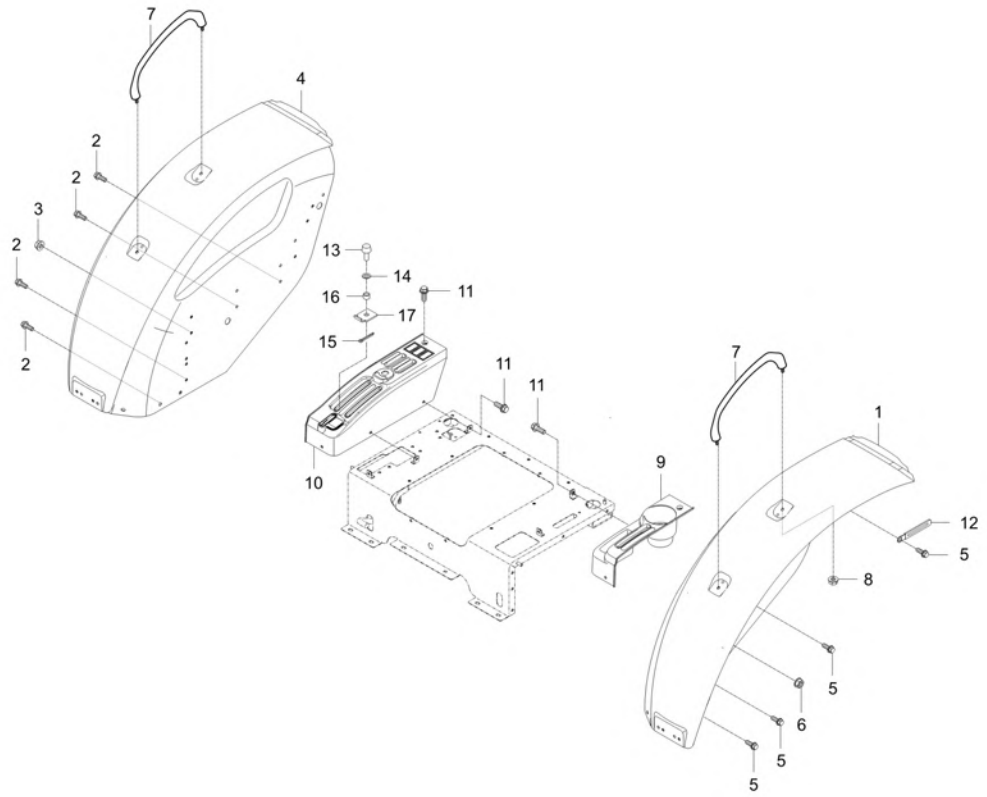

A : DK6010HSE

No.	Part Number	Description	Qty A	Qty B	Qty C	Qty D	Qty E	I.C	Remark
17	T2350-95472	STOPPER v	1						

----> Old replace New
<---- New replace Old
<-X-> Not interchangeable
<---> Interchangeable
<-O-> Interchangeable with another part(s)
* Please place an order assy(*)

https://tractormanualz.com/

TD2-G640504

RANGE SHIFT LEVER GROUP

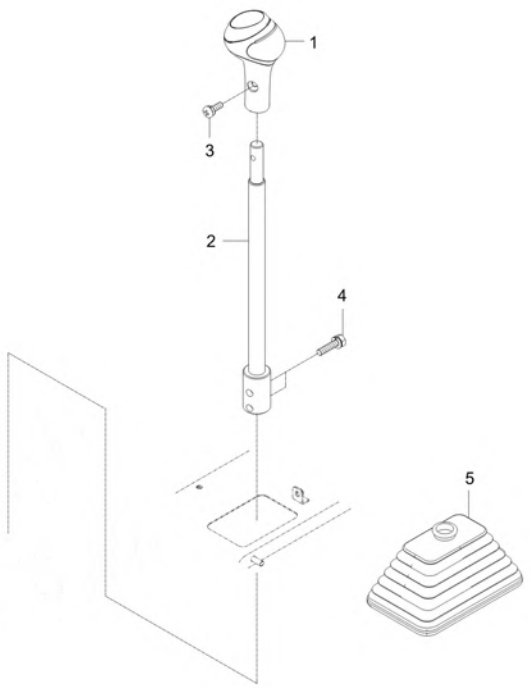

A : DK6010HSE

No.	Part Number	Description	Qty A	Qty B	Qty C	Qty D	Qty E	I.C	Remark
1	TD26-0358A	GRIP,RANGESHIFT	1						-
2	T5715-53212	LEVER, RANGE v	1						N
3	03016-50616	SCREW	1						M6XP1.0
4	01123-50830	BOLT, WASHER v	2						M8P1.25*30
5	T4620-60371	BOOT	1						

----> Old replace New
<---- New replace Old
<-X-> Not interchangeable
<---> Interchangeable
<-O-> Interchangeable with another part(s)
* Please place an order assy(*)

https://tractormanualz.com/

TD2-G641002

RANGE SHIFT LEVER GROUP

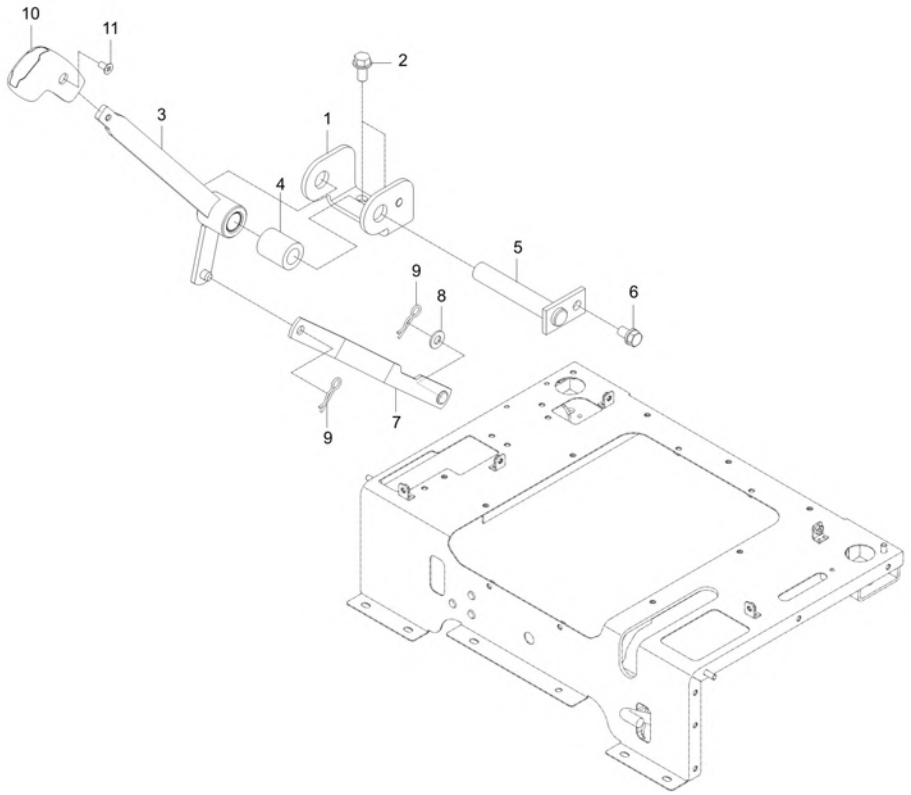

A : DK6010HSE

No.	Part Number	Description	Qty A	Qty B	Qty C	Qty D	Qty E	I.C	Remark
1	T5710-53412	BRACKET	1						T4.5
2	01754-50816	BOLT, FLANGE	2						M8XP1.25
3	T5710-53434	LEVER, ADJUSTING v	1						N
4	T5715-53471	BUSHING	1						OD28,ID16.5
5	T4835-66532	SHAFT	1						
6	01123-50814	BOLT, WASHER	1						M8*P1.25
7	T5715-53571	ROD	1						N
8	04012-50080	WASHER, PLAIN	1						M8
9	05515-50800	PIN, SNAP	2						M8
10	T5710-53471	GRIP	1						
11	03056-50510	SCREW	1						M5XP0.8

----> Old replace New <---- New replace Old <-X-> Not interchangeable
<---> Interchangeable <-O-> Interchangeable with another part(s)
* Please place an order assy(*)

https://tractormanualz.com/

TD2-G641502

RANGE SHIFT LEVER GROUP

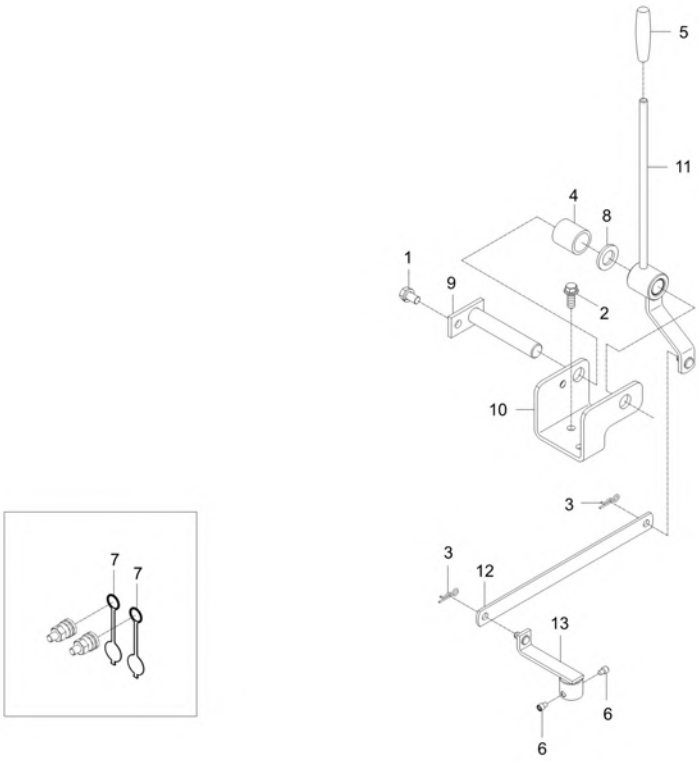

A : DK6010HSE

No.	Part Number	Description	Qty A	Qty B	Qty C	Qty D	Qty E	I.C	Remark
1	01123-50814	BOLT, WASHER	1						M8*P1.25
2	01754-50816	BOLT, FLANGE	2						M8XP1.25
3	05525-50800	PIN, SNAP	2						DIA8
4	T2185-66721	SPACER	1						
5	T2185-71221	GRIP, GRAY	1						
6	T2610-39572	SCREW, SET	2						M8*P1.25
7	T4720-90081	DUST-CAP	2 UGG700001 ~ VGG700004						
7	TF14-0122A	CAP, COUPLER SOCKET-1/2	2 VGG700005 ~ WGG700024					<----->	1/2
8	T4810-66721	WASHER	1						N
9	T4835-66532	SHAFT	1						
11	T5710-54023	DOUBLE ACTING LEVER, LH	1						-
12	T5710-54051	ROD, DOUBLE ACTING	1						T3.0
13	T5710-59071	LEVER1, DUBLE	1						N

----> Old replace New
<----> Interchangeable
* Please place an order assy(*)
<---- New replace Old
<-O-> Interchangeable with another part(s)
<-X-> Not interchangeable

https://tractormanualz.com/

TD2-G644503

FRONT WHEEL DRIVE LEVER GROUP

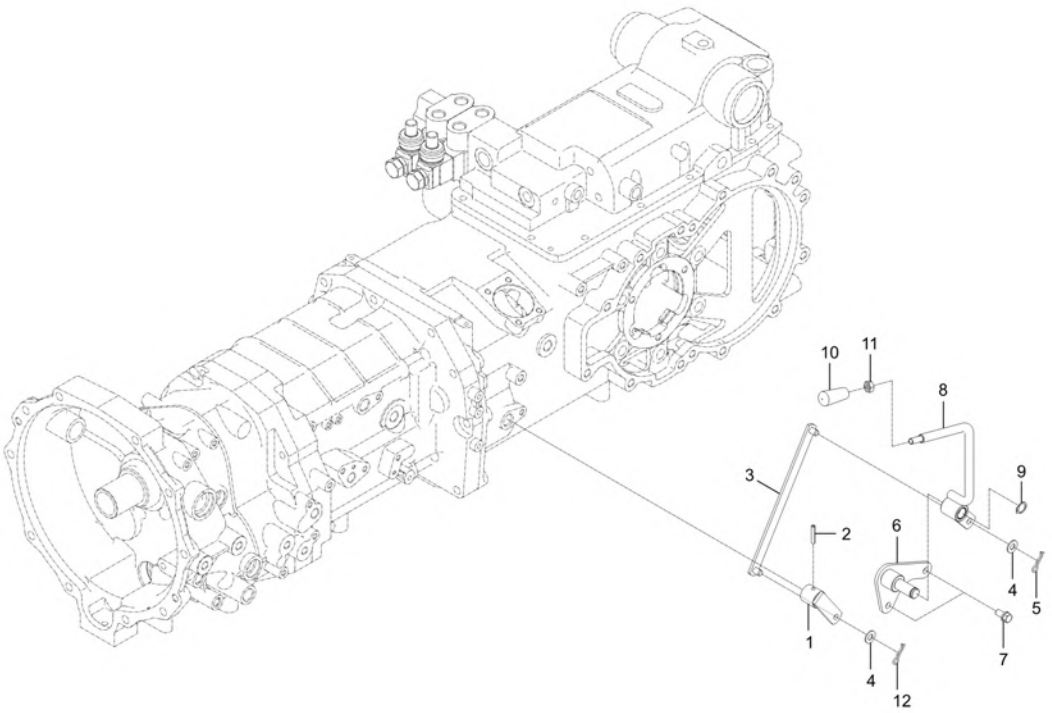

A : DK6010HSE

No.	Part Number	Description	Qty A	Qty B	Qty C	Qty D	Qty E	I.C	Remark
1	T2185-44764	LINK1,FRONT DRIVE	1						
2	05411-00635	PIN, SPRING	1						DIA5*36
3	T5755-59072	ROD	1						N
4	04011-50100	PLAIN WASHER	2						M10
5	05515-51000	Split Pin	1						DIA10
6	TD26-0539A	BRACKET,4WD	1						-
7	01123-51020	BOLT	2						M10*P1.5
8	T5755-59041	LEVER, FRONT WHEEL	1						N
9	04612-00180	SNAP RING	1						
10	T5715-53611	GRIP	1						N
11	02176-50100	NUT v	1						M10XP1.25
12	05511-50318	PIN, SPLIT v	1						

----> Old replace New
<---- New replace Old
<-X-> Not interchangeable
<---> Interchangeable
<-O-> Interchangeable with another part(s)
* Please place an order assy(*)

https://tractormanualz.com/

TD2-G645202

PARKING BRAKE LEVER GROUP

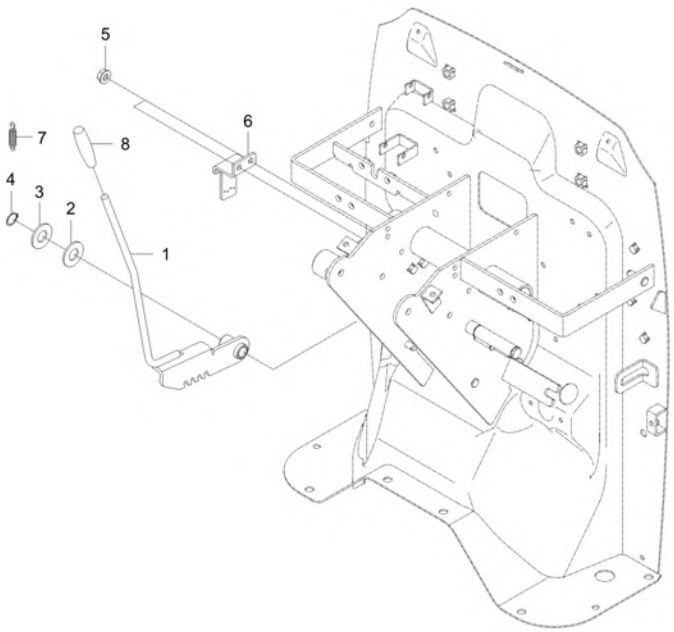

A : DK6010HSE

No.	Part Number	Description	Qty A	Qty B	Qty C	Qty D	Qty E	I.C	Remark
1	TD26-0413A	LEVER	1						-
2	T5210-65291	WASHER1, RUBBER	1						
3	04013-50120	PLAIN WASHER	1						M12
4	04612-00120	RING,SNAP v	1						#12
5	02761-50060	NUT, FLANGE	2						M6XP1.0
6	T5535-81212	BRACKET	1						T3
7	57781-5121-1	FRICTION SPRING	1						DIA1.2
7	T4157-51211	SPRING, RETURN	1					<------	
8	T2350-55922	GRIP	1						

----> Old replace New
<---- New replace Old
<-X-> Not interchangeable
<---> Interchangeable
<-O-> Interchangeable with another part(s)
* Please place an order assy(*)

https://tractormanualz.com/

TD2-G645501

DIFFERENTIAL PEDAL GROUP

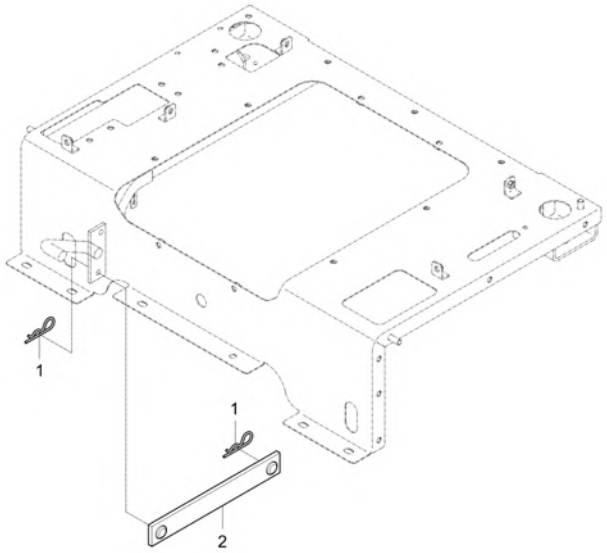

A : DK6010HSE

No.	Part Number	Description	Qty A	Qty B	Qty C	Qty D	Qty E	I.C	Remark
1	05515-50800	PIN, SNAP	2						M8
2	T5710-52811	ROD, DIFF.SET	1						N

----> Old replace New
<----> Interchangeable
* Please place an order assy(*)
<---- New replace Old
<-O-> Interchangeable with another part(s)
<-X-> Not interchangeable

https://tractormanualz.com/

TD2-G646503

BRAKE PEDAL GROUP

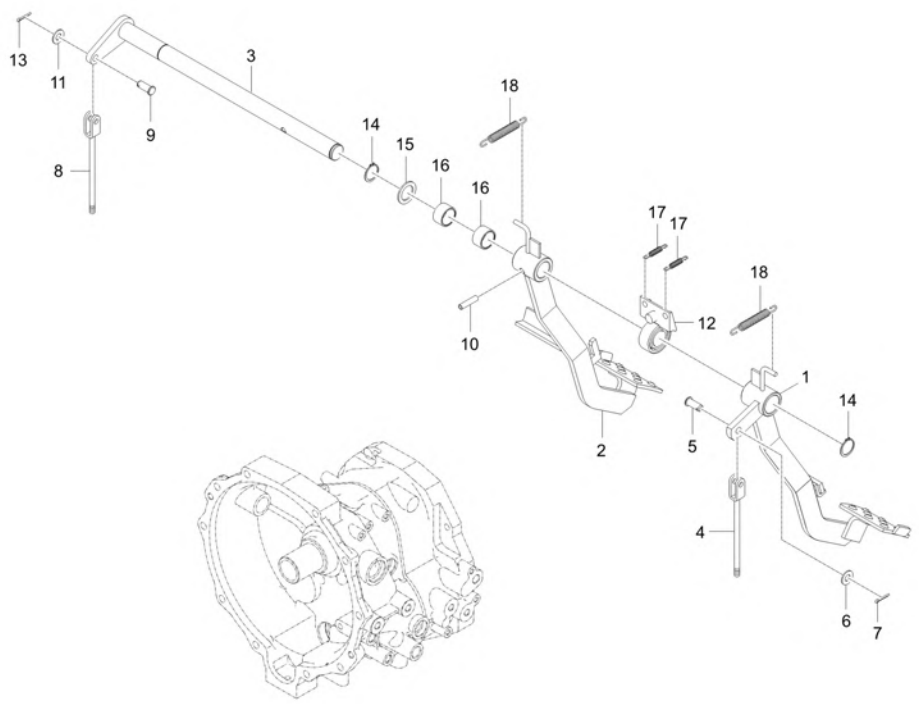

A : DK6010HSE

No.	Part Number	Description	Qty A	Qty B	Qty C	Qty D	Qty E	I.C	Remark
1	TD26-0339B	PEDAL,BRAKE-LH	1						
2	TD26-0341B	PEDAL,BRAKE-RHv	1						
3	TD26-0347B	SHAFT, BRAKE	1						-
4	T4620-55762	ROD2,BRAKE	1						
5	05122-51025	JOINT PIN	1						DIA10*25
6	04013-50100	PLAIN WASHER	1						M10
7	05511-50318	PIN, SPLIT v	1						
8	T4620-55762	ROD2,BRAKE	1						
9	05122-51025	JOINT PIN	1						DIA10*25
10	05411-00840	PIN, SPRING	1						DIA8*40
11	04013-50100	PLAIN WASHER	1						M10
12	T5210-55742	PLATE,SWITCH	1						
13	05511-50318	PIN, SPLIT v	1						
14	04612-00250	CIR-CLIP	2						
15	84612-1445-0	COLLAR	2						DIA36*8
16	08822-53017	NEEDLE BEARING	2						NTN,K253017
17	T2305-26641	SPRING, DIFF.LOCK PEDAL	2						DIA1.2
18	T2350-55961	SPRING BRAKE	2						DIA2.3

----> Old replace New <---- New replace Old <-X-> Not interchangeable
<---> Interchangeable <-O-> Interchangeable with another part(s)
* Please place an order assy(*)

https://tractormanualz.com/

TD2-G646601

BRAKE ROD GROUP

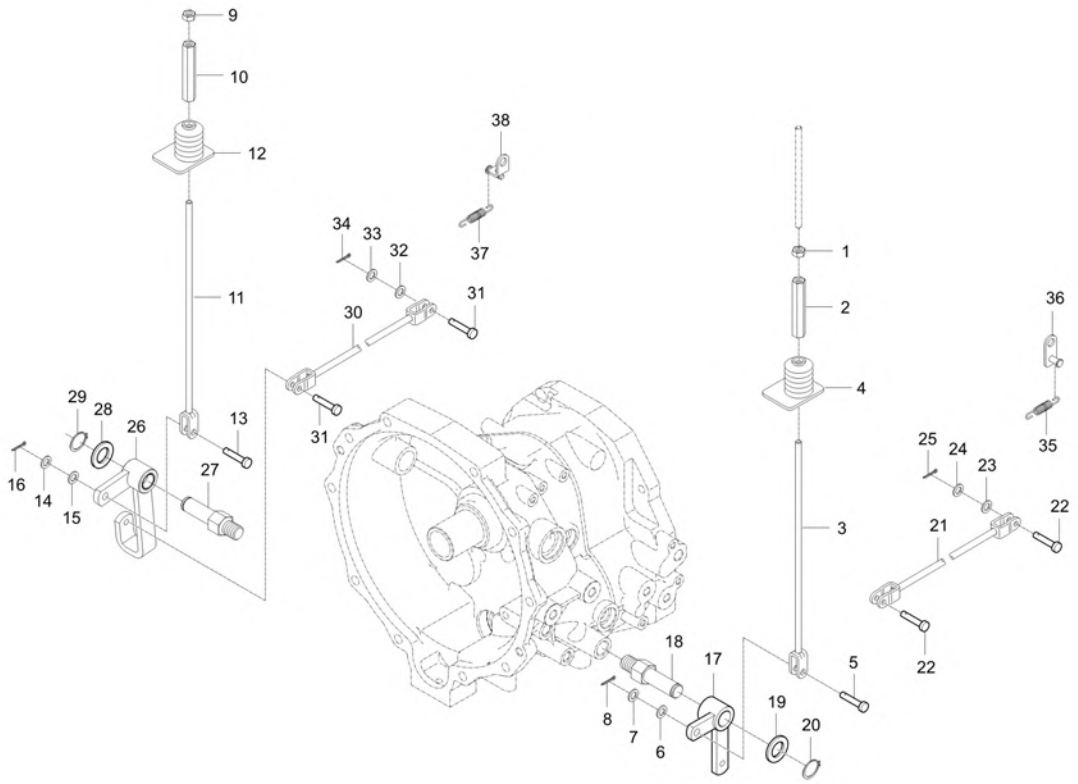

A : DK6010HSE

No.	Part Number	Description	Qty A	Qty B	Qty C	Qty D	Qty E	I.C	Remark
1	02176-50100	NUT v	1						M10XP1.25
2	32350-2898-4	TURNBUCKLE dnr v	1 ~ UGG700072						HEX14
2	TD26-1024A	TURNBUCKLE	1					<------	HEX14
3	T2610-55751	ROD 1,BRAKE	1						
4	T4620-55821	JABARA	1						
5	05122-51028	PIN, JOINT v	1						DIA10
6	T4682-65311	WASHER 3	1						
7	04013-50100	PLAIN WASHER	1						M10
8	05511-50318	PIN, SPLIT v	1						
9	02176-50100	NUT v	1						M10XP1.25
10	32350-2898-4	TURNBUCKLE dnr v	1						HEX14
10	TD26-1024A	TURNBUCKLE	1					<------	HEX14
11	T2610-55751	ROD 1,BRAKE	1						
12	T4620-55821	JABARA	1						
13	05122-51028	PIN, JOINT v	1						DIA10
14	04013-50100	PLAIN WASHER	1						M10
15	T4682-65311	WASHER 3	1						
16	05511-50318	PIN, SPLIT v	1						

----> Old replace New
<----> Interchangeable
* Please place an order assy(*)
<---- New replace Old
<-O-> Interchangeable with another part(s)
<-X-> Not interchangeable

https://tractormanualz.com/

TD2-G646601

BRAKE ROD GROUP

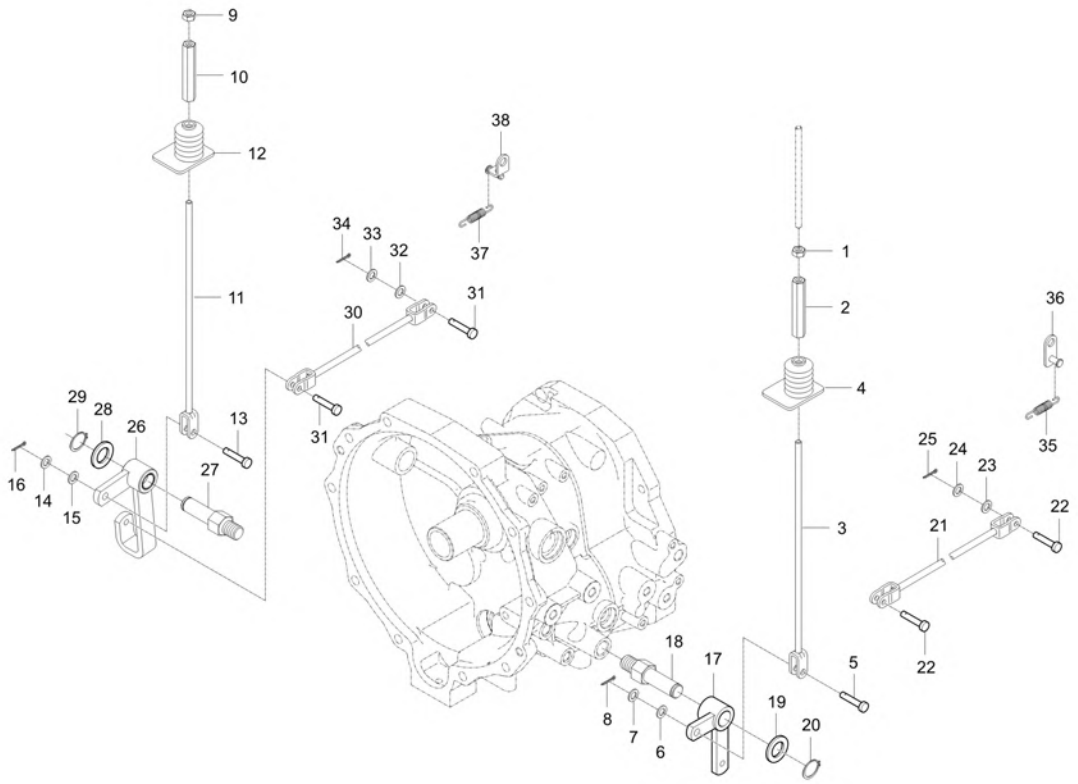

A : DK6010HSE

No.	Part Number	Description	Qty A	Qty B	Qty C	Qty D	Qty E	I.C	Remark
17	T5710-51611	LEVER, BRAKE LH	1						N
18	T2610-55802	SHAFT, BRAKE(LH)	1						육각２７
19	04011-50200	WASHER, PLAIN	1						
20	04612-50200	RING,SNAP	1						
21	T2660-55771	ROD 3, BRAKE	1						
22	05122-50828	PIN,JOINT	2						
23	T4145-55791	CUSHION	2						
24	04012-50080	WASHER, PLAIN	2						M8
25	05511-50218	PIN, SPLIT	2						DIA2*18
26	TD26-0345A	LEVER,BRAKE-RH	1						-
27	T2610-55802	SHAFT, BRAKE(LH)	1						육각２７
28	04011-50200	WASHER, PLAIN	1						
29	04612-50200	RING,SNAP	1						
30	T2660-55771	ROD 3, BRAKE	1						
31	05122-50828	PIN,JOINT	2						
32	T4145-55791	CUSHION	2						
33	04012-50080	WASHER, PLAIN	2						M8
34	05511-50218	PIN, SPLIT	2						DIA2*18

----> Old replace New
<----> Interchangeable
* Please place an order assy(*)
<---- New replace Old
<-O-> Interchangeable with another part(s)
<-X-> Not interchangeable

https://tractormanualz.com/

TD2-G646601

BRAKE ROD GROUP

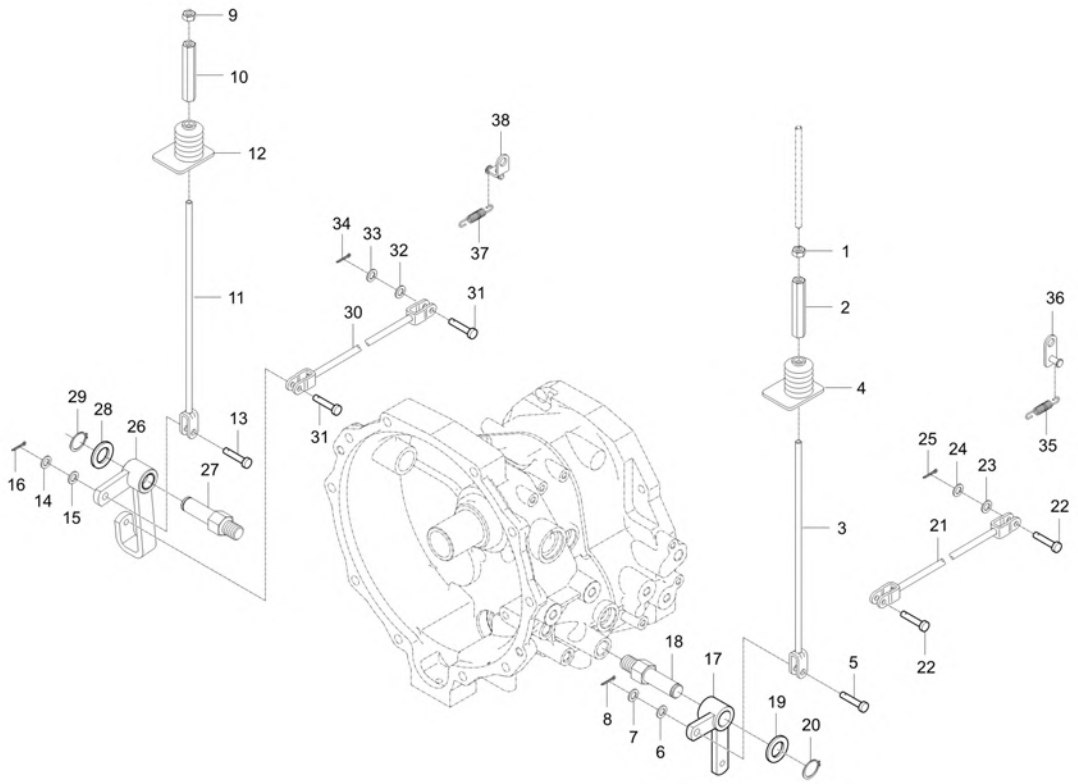

A : DK6010HSE

No.	Part Number	Description	Qty A	Qty B	Qty C	Qty D	Qty E	I.C	Remark
35	T2305-26641	SPRING, DIFF.LOCK PEDAL	1						DIA1.2
36	T5718-51621	BRACKET	1						
37	T2305-26641	SPRING, DIFF.LOCK PEDAL	1						DIA1.2
38	T5718-51631	BRACKET	1						T3.0

----> Old replace New
<----> Interchangeable
* Please place an order assy(*)
<---- New replace Old
<-O-> Interchangeable with another part(s)
<-X-> Not interchangeable

https://tractormanualz.com/

TD2-G647501

HST PEDAL GROUP

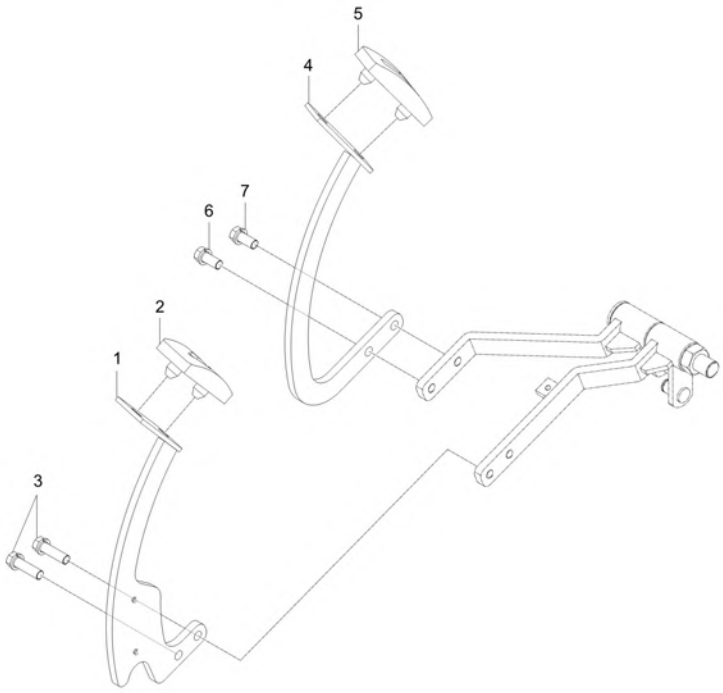

A : DK6010HSE

No.	Part Number	Description	Qty A	Qty B	Qty C	Qty D	Qty E	I.C	Remark
1	TD26-0303A	PEDAL-LH1	1						
2	T4125-31123	RUBBER, PEDAL	1						
3	01133-51022	BOLT W/WASHER M10X1.25P	2						M10XP1.25
4	TD26-0313A	PEDAL-RH1	1						
5	T4125-31123	RUBBER, PEDAL	1						
6	01133-51022	BOLT W/WASHER M10X1.25P	1						M10XP1.25
7	01133-51022	BOLT W/WASHER M10X1.25P	1						M10XP1.25

----> Old replace New
<----> Interchangeable
* Please place an order assy(*)
<---- New replace Old
<-O-> Interchangeable with another part(s)
<-X-> Not interchangeable

https://tractormanualz.com/

TD2-G647603

HST CONTROL GROUP

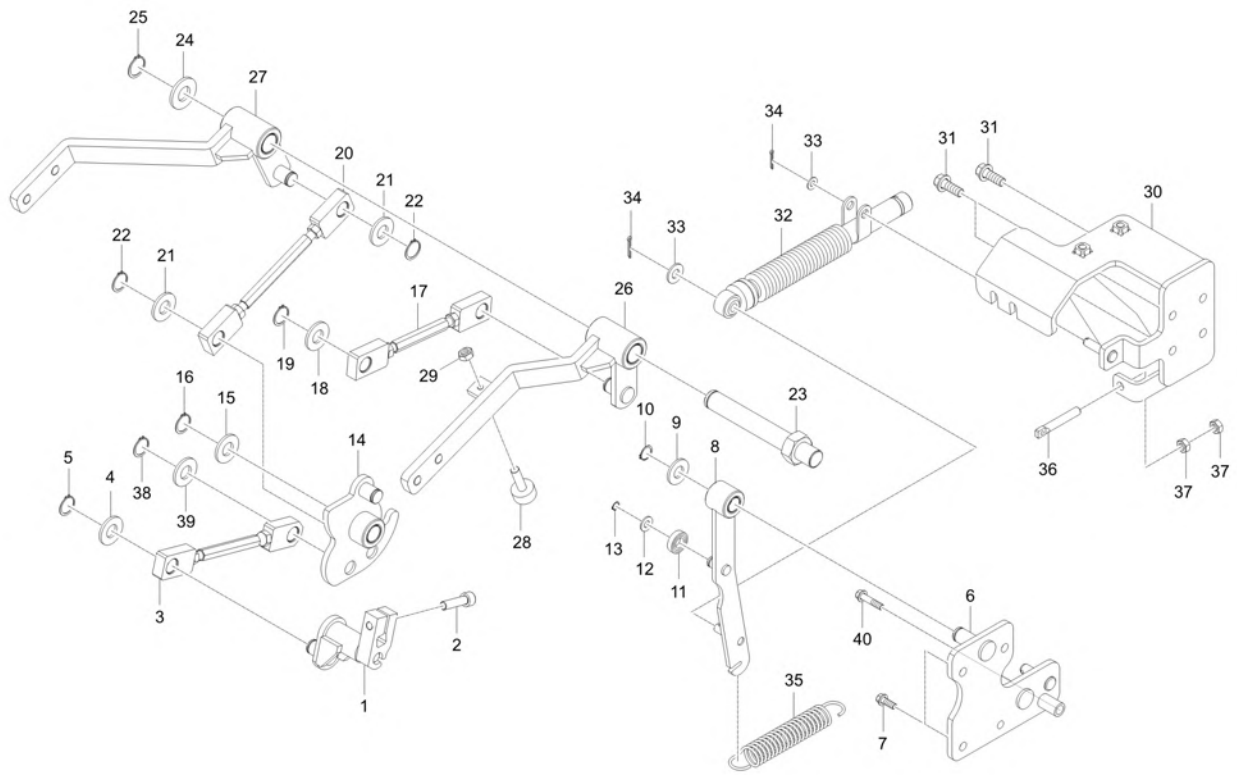

A : DK6010HSE

No.	Part Number	Description	Qty A	Qty B	Qty C	Qty D	Qty E	I.C	Remark
1	TD26-0260A	LEVER,HSTSHIFT	1						
2	T2610-39252	BOLT	1						M8*1.25
3	TD26-0291A	ROD,CONNECTINGHST4	1						
4	04011-50140	WASHER, PLAIN	1						T2.6
5	04612-00140	RING,SNAP	1						
6	TD26-0239A	LINK,INTERLOCKINGHST	1						
7	01123-50822	WASHER BOLT	4						M8XP1.25
8	TD26-0269A	LEVER,CONNECTINGHST	1						
9	04011-50140	WASHER, PLAIN	1						T2.6
10	04612-00140	RING,SNAP	1						
11	08141-06200	BEARING(NCX)	1						
12	04011-50100	PLAIN WASHER	1						M10
13	04612-00100	RING,SNAP	1						
14	TD26-0230A	CONTROLLER,HST	1						
15	04011-50160	PLAIN WASHER	1						M16
16	04612-00160	SNAP RING v	1						
17	TD26-0224A	ROD,CONNECTINGHST2	1						
18	04011-50140	WASHER, PLAIN	2						T2.6

----> Old replace New <---- New replace Old <-X-> Not interchangeable
<---> Interchangeable <-O-> Interchangeable with another part(s)
* Please place an order assy(*)

https://tractormanualz.com/

TD2-G647603

HST CONTROL GROUP

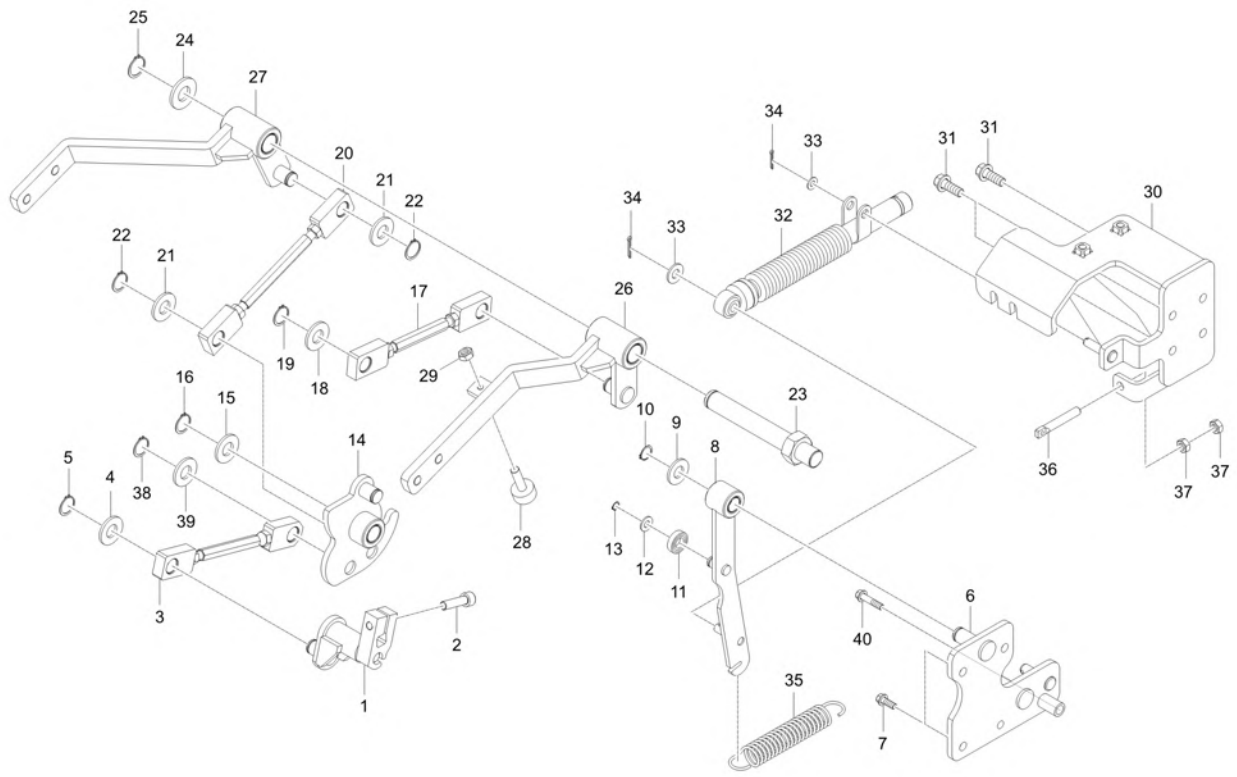

A : DK6010HSE

No.	Part Number	Description	Qty A	Qty B	Qty C	Qty D	Qty E	I.C	Remark
19	04612-00140	RING,SNAP	2						
20	TD26-0287A	ROD,CONNECTINGHST3	1						
21	04011-50140	WASHER, PLAIN	2						T2.6
22	04612-00140	RING,SNAP	2						
23	T4125-33171	SHAFT,STAY PEDAL	1						
24	04011-50180	PLAIN WASHER	1						T2.9
25	04612-00180	SNAP RING	1						
26	TD26-0277A	PEDAL,HST-LH	1						
27	TD26-0243A	PEDAL,HST-RH	1						
28	T2350-55881	BOLT ADJUSTING	1						
29	02156-50080	NUT v	1						M8XP1.25
30	TD26-0210B	BRACKET,STOPPER	1						
31	01123-50822	WASHER BOLT	4						M8XP1.25
32	TC24-0221A	DEMPER ASSY v	1						
33	04013-50080	PLAIN WASHER	2						M8
34	05511-50220	PIN, SPLIT	2						DIA1.8XL20
35	T4520-26161	SPRING, BRAKE	1						DIA2.5
36	T4125-33241	BOLT, TENSION ADJUST	1						

----> Old replace New
<----> Interchangeable
* Please place an order assy(*)
<---- New replace Old
<-O-> Interchangeable with another part(s)
<-X-> Not interchangeable

https://tractormanualz.com/

TD2-G647603

HST CONTROL GROUP

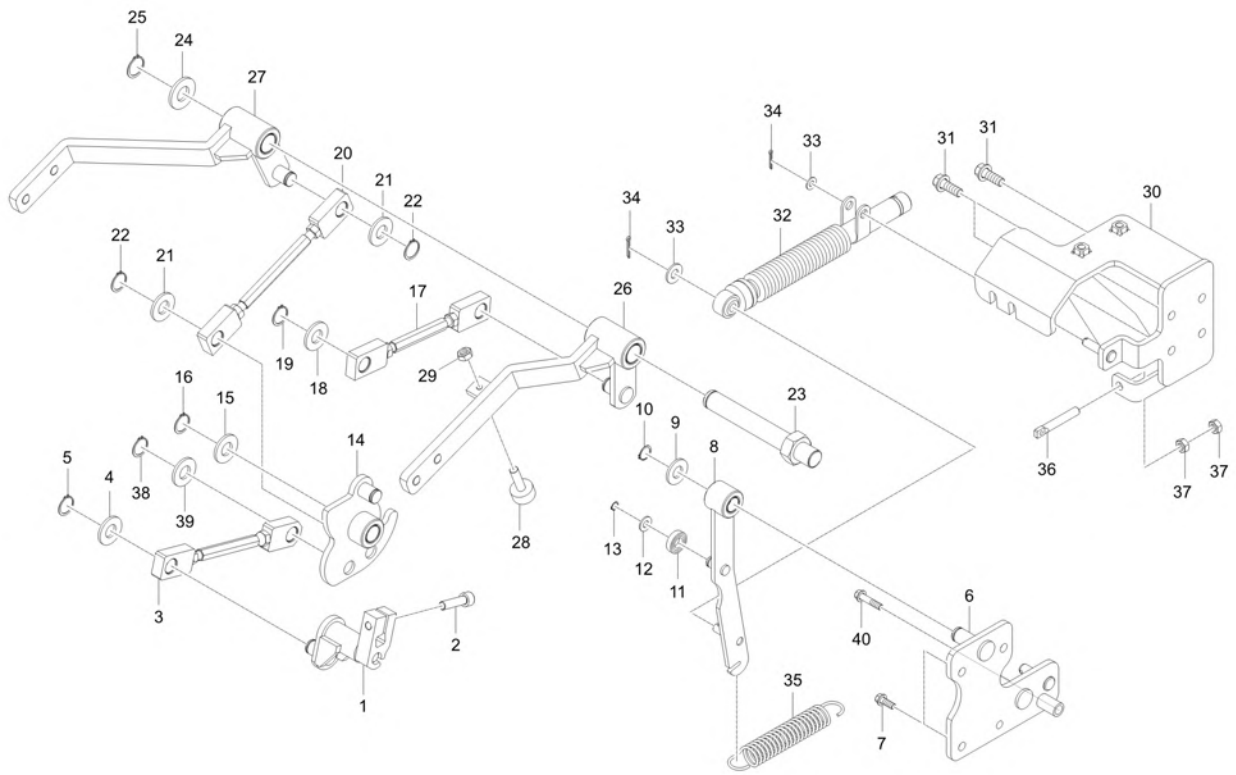

A : DK6010HSE

No.	Part Number	Description	Qty A	Qty B	Qty C	Qty D	Qty E	I.C	Remark
37	02156-50080	NUT v	2						M8XP1.25
38	04612-00140	RING,SNAP	1						
39	04011-50140	WASHER, PLAIN	1						T2.6
40	01123-50840	BOLT	1						M8*P1.25-40

----> Old replace New
<---- New replace Old
<-X-> Not interchangeable
<---> Interchangeable
<-O-> Interchangeable with another part(s)
* Please place an order assy(*)

https://tractormanualz.com/

TD2-G648001

ACCELERATOR GROUP

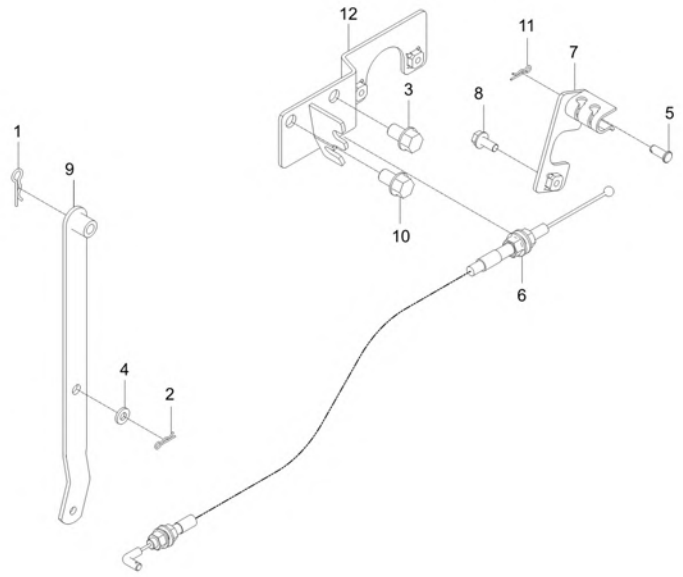

A : DK6010HSE

No.	Part Number	Description	Qty A	Qty B	Qty C	Qty D	Qty E	I.C	Remark
1	05515-50800	PIN, SNAP	1						M8
2	05525-50600	SNAP PIN	1						DIA6
3	01774-51016	BOLT,FLANGE	1						
4	T4930-66751	WASHER 3	1						
5	05122-50616	PIN, JOINT	1						DIA6XL16
6	TD26-0610A	CABLE,ACLTR-T4	1						
7	TC26-0528A	PLATE, CONNECTING	1						
8	01754-50614	FLANGE BOLT	1						
9	TD26-0926A	ROD, ACLTR CONNECTION-2	1						-
10	01774-51016	BOLT,FLANGE	1						
11	05525-50600	SNAP PIN	1						DIA6
12	TC26-0527A	BRACKET, CABLE	1 ~ VGG700016						
12	TC26-0527B	BRACKET, CABLE	1 VGG700017 ~ WGG700024					<------	

----> Old replace New
<---- New replace Old
<-X-> Not interchangeable
<---> Interchangeable
<-O-> Interchangeable with another part(s)
* Please place an order assy(*)

https://tractormanualz.com/

TC2-G648106

ACCELERATOR LEVER GROUP

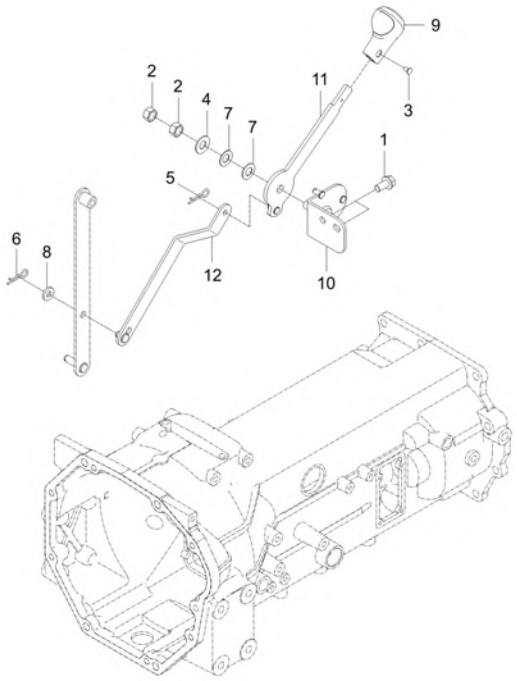

A : DK6010HSE

No.	Part Number	Description	Qty A	Qty B	Qty C	Qty D	Qty E	I.C	Remark
1	01754-50816	BOLT, FLANGE	2						M8XP1.25
2	02176-50100	NUT v	2						M10XP1.25
3	03056-50408	BOLT	1						M4XP0.7
4	04013-50100	PLAIN WASHER	1						M10
5	05525-50600	SNAP PIN	1						DIA6
6	52300-3412-1	SNAP PIN	1						DIA1.6
7	T4668-83301	SPRING	2						
8	T4930-66741	WASHER 2	1						
9	T5750-81091	GRIP, HAND ACCEL	1						-
10	T5710-81012	BRACKET, ACCEL	1						-
11	T5710-81031	LEVER, HAND ACCEL	1						N
12	T5710-81051	ACCEL ROD, 1	1						N

----> Old replace New
<----> Interchangeable
* Please place an order assy(*)
<---- New replace Old
<-O-> Interchangeable with another part(s)
<-X-> Not interchangeable

https://tractormanualz.com/

TC2-G648201

ACCELERATOR PEDAL GROUP

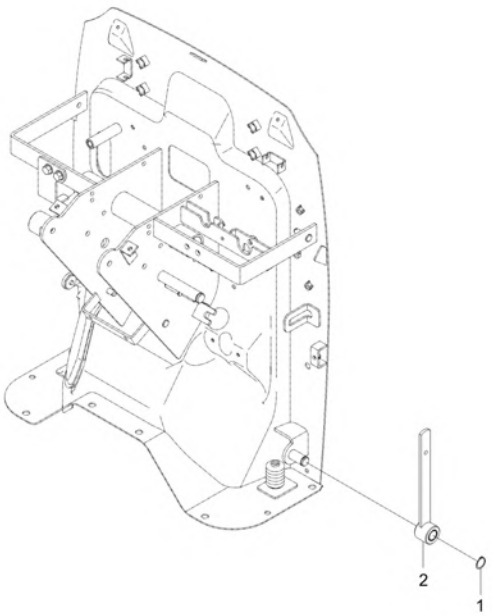

A : DK6010HSE

No.	Part Number	Description	Qty A	Qty B	Qty C	Qty D	Qty E	I.C	Remark
1	04612-00150	CIR CLIP, EXTERNAL	1						DIA15
2	TC26-0535A	LEVER, ACLTR-ARM	1						

----> Old replace New
<---- New replace Old
<-X-> Not interchangeable
<---> Interchangeable
<-O-> Interchangeable with another part(s)
* Please place an order assy(*)

https://tractormanualz.com/

TD2-G648501 EXTERNAL POSITION ADJUSTING LEVER GROUP

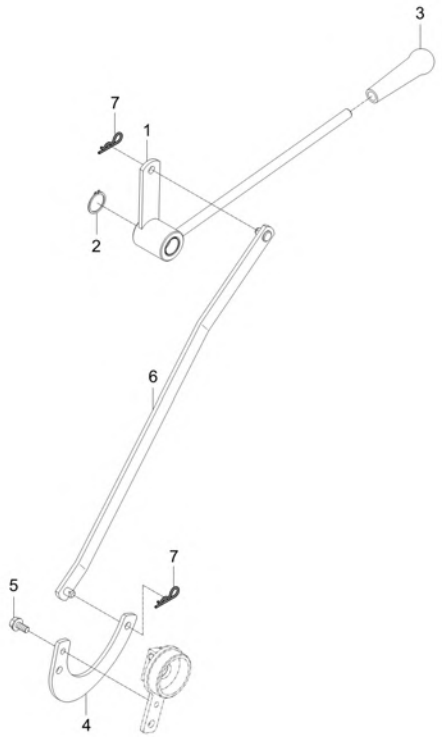

A : DK6010HSE

No.	Part Number	Description	Qty A	Qty B	Qty C	Qty D	Qty E	I.C	Remark
1	T5715-53511	LEVER,ADJUSTING	1						N
2	04612-00180	SNAP RING	1						
3	T4818-71221	GRIP	1						
4	T5715-53531	BRACKET	1						T4.5
5	01023-50612	BOLT, WASHER v	1						M6*P1.0
6	T5715-53551	ROD	1						N
7	05515-50800	PIN, SNAP	2						M8

----> Old replace New
<---- New replace Old
<-X-> Not interchangeable
<---> Interchangeable
<-O-> Interchangeable with another part(s)
* Please place an order assy(*)

https://tractormanualz.com/

TD2-G652002

INSTRUMENT PANEL FRAME GROUP

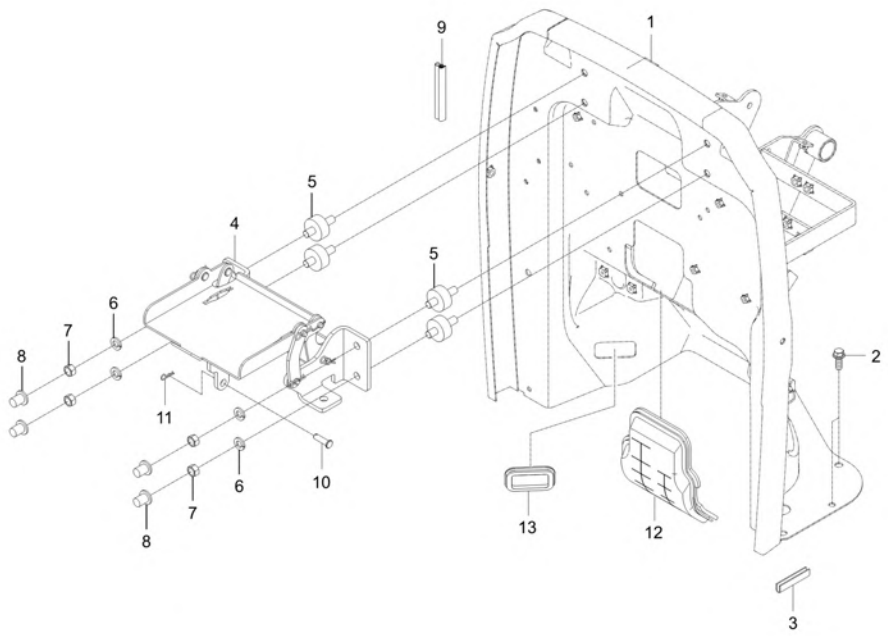

A : DK6010HSE

No.	Part Number	Description	Qty A	Qty B	Qty C	Qty D	Qty E	I.C	Remark
1	TD26-0410B	ASSY BODY, FRAME-ROPS	1						
1	TD26-0410C	ASSY BODY, FRAME-ROPS	1					<--O-->	
2	01754-50816	BOLT, FLANGE	8						M8XP1.25
3	T5620-50291	U-SHAPED RUBBER	1						
4	T5715-80603	ASS'Y,HILGEBRACKET	1						N
5	T5520-80391	DUSTPROOF RUBBER	4						
6	04512-50100	SPRING WASHER	4						M10
7	02176-50100	NUT v	4						M10XP1.25
8	32210-2758-1	PLUG	4						M12
9	T5710-80651	RUBBER	1						N
10	05122-51025	JOINT PIN	1						DIA10*25
11	05515-51000	Split Pin	1						DIA10
12	TD26-0640A	JABARA, FRAME	1						T1.2
13	TD26-1021A	Packing, cover	1						

----> Old replace New
<---- New replace Old
<-X-> Not interchangeable
<---> Interchangeable
<-O-> Interchangeable with another part(s)
* Please place an order assy(*)

https://tractormanualz.com/

TD2-G653004

STEERING COLUMN GROUP

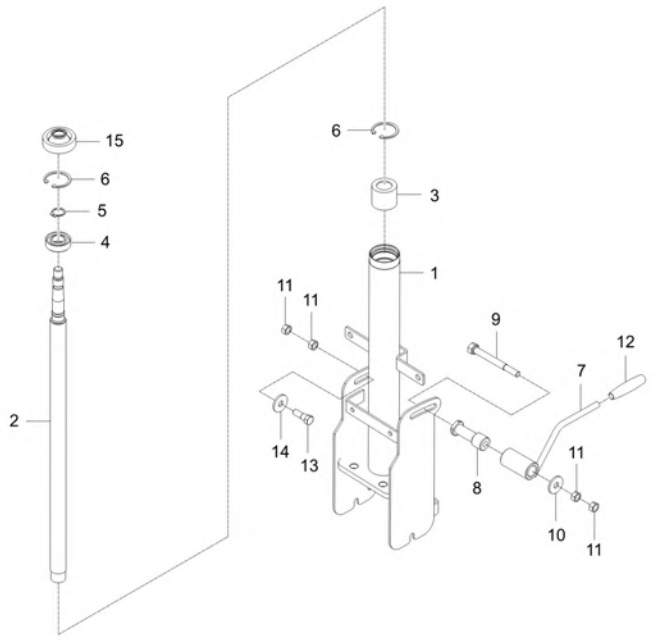

A : DK6010HSE

No.	Part Number	Description	Qty A	Qty B	Qty C	Qty D	Qty E	I.C	Remark
1	TD26-0589A	ASSY COLUMN, STEERING	1						
1	TD26-0589B	ASSY COLUMN, STEERING	1					<--O-->	
2	TD26-0592A	SHAFT, STEERING v	1						-
3	T4260-50100	RUBBER CUSHION	1						L3503, D4351
4	08111-06003	BEARING, BALL dnr v	1						
5	04612-00170	CIR-CLIP	1						
6	04611-00350	CIR CLIP, INTERNAL v	2						SK5M
7	T5710-80841	LEVER, TILT	1						N
8	T5710-80852	BOLT, HOLDER	1						N
9	T5710-80871	BOLT	1						M8XP1.25
10	04015-50080	PLAIN WASHER	1						T2.6
11	02156-50080	NUT v	4						M8XP1.25
12	T2185-71241	GRIP, DARK BLUE	1						
13	T5710-80861	BOLT	1						M8XP1.25
14	T5715-80691	WASHER	1						T2.0
15	T2440-16351	SEAL,OIL	1						

---> Old replace New
<---- New replace Old
<-X-> Not interchangeable
<---> Interchangeable
<-O-> Interchangeable with another part(s)
* Please place an order assy(*)

https://tractormanualz.com/

TD2-G654001

STEERING COLUMN COVER GROUP

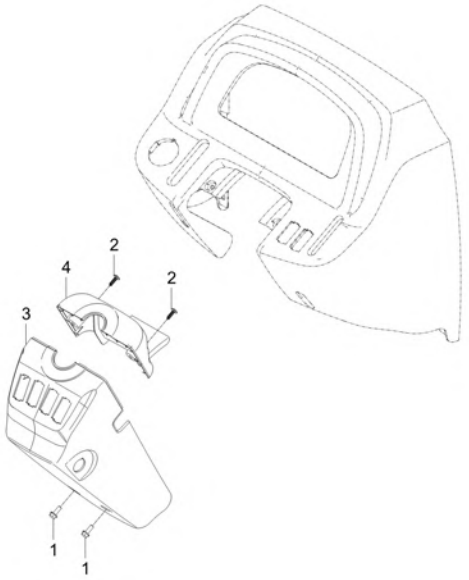

A : DK6010HSE

No.	Part Number	Description	Qty A	Qty B	Qty C	Qty D	Qty E	I.C	Remark
1	01754-50616	BOLT, FLANGE v	2						M6*P1.0
2	T4930-64301	SCREW	2						
3	T5710-81223	COVER v	1						
4	T5710-81232	COVER	1						

----> Old replace New
<---- New replace Old
<-X-> Not interchangeable
<---> Interchangeable
<-O-> Interchangeable with another part(s)
* Please place an order assy(*)

https://tractormanualz.com/

TD2-G655001

INSTRUMENT COVER GROUP

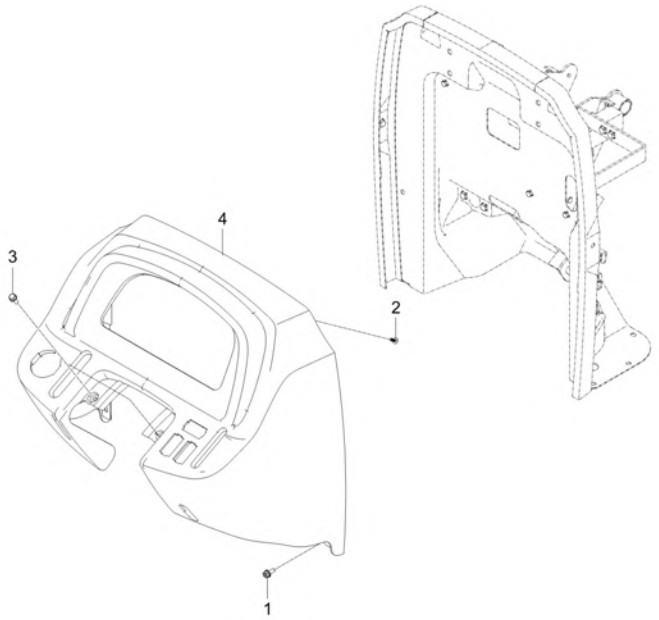

A : DK6010HSE

No.	Part Number	Description	Qty A	Qty B	Qty C	Qty D	Qty E	I.C	Remark
1	01205-50616	BOLT	2						M6*P1.0
2	38430-1827-1	SCREW	2						-
3	T4625-55431	FLANGE BOLT	2						
4	T5710-81213	INSTRUMENT COVER, UP v	1						-
4	T5710-81214	INSTRUMENT COVER, UP	1					<--O-->	-

----> Old replace New
<---> Interchangeable
* Please place an order assy(*)
<---- New replace Old
<-O-> Interchangeable with another part(s)
<-X-> Not interchangeable

https://tractormanualz.com/

TD2-G662004

STEP MAT GROUP

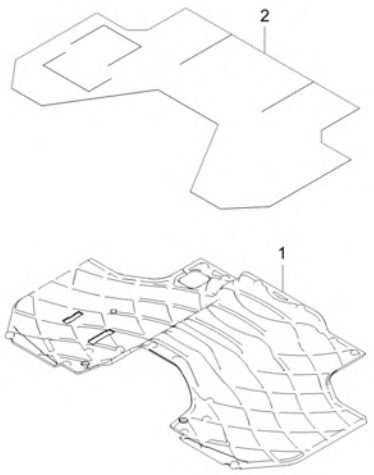

A : DK6010HSE

No.	Part Number	Description	Qty A	Qty B	Qty C	Qty D	Qty E	I.C	Remark
1	TD26-0643A	MAT,STEP-HST	1						-
2	T4125-70261	MAT	1						T0.4~0.5

----> Old replace New
<----> Interchangeable
* Please place an order assy(*)
<---- New replace Old
<-O-> Interchangeable with another part(s)
<-X-> Not interchangeable

https://tractormanualz.com/

TD2-G663003

AUXLIARY STEP GROUP

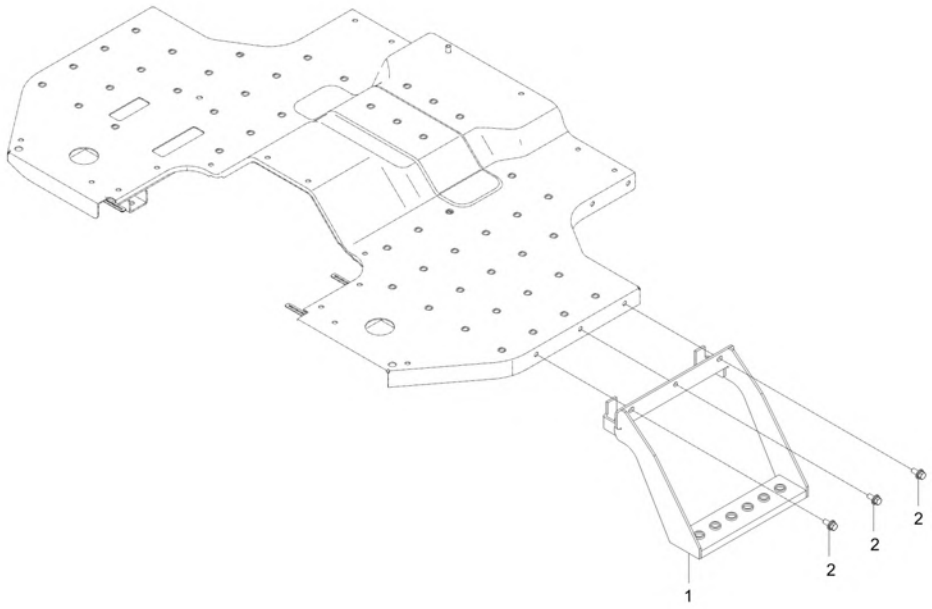

A : DK6010HSE

No.	Part Number	Description	Qty A	Qty B	Qty C	Qty D	Qty E	I.C	Remark
1	TD26-0597A	STEP(SUB)	1						-
2	01125-50820	BOLT, WASHER	1						M8XP1.25

----> Old replace New
<---- New replace Old
<-X-> Not interchangeable
<---> Interchangeable
<-O-> Interchangeable with another part(s)
* Please place an order assy(*)

https://tractormanualz.com/

TD2-G671003

FUEL TANK GROUP

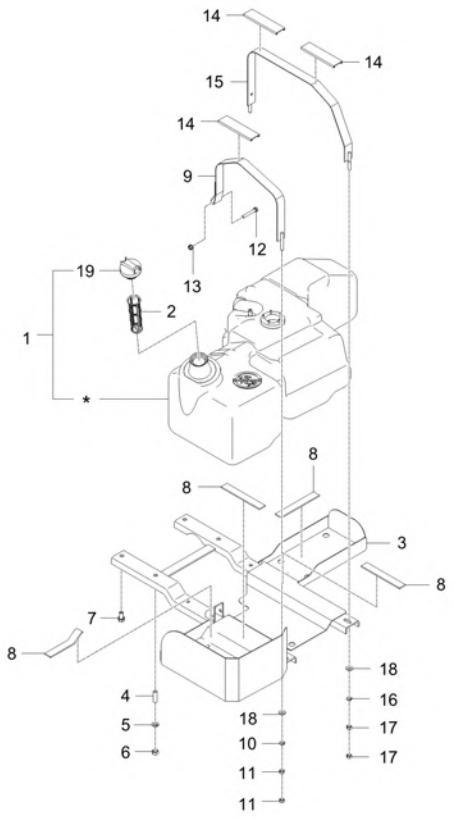

A : DK6010HSE

No.	Part Number	Description	Qty A	Qty B	Qty C	Qty D	Qty E	I.C	Remark
1	TD26-0249C	ASSYTANK,FUEL	1						
2	T4686-41351	FILTER, FUEL	1						
3	TD26-0251B	ASSYSUPPORT,FUELTANK	1						
4	01574-51225	STUD	2						M12XP1.25
5	04512-50120	SPRING WASHER	2						M12
6	02176-50120	NUT	2						M12XP1.25
7	01133-51225	BOLT, WASHER v	2						M12XP1.25
8	T2610-50271	RUBBER, CUSHION v	5						
9	TD26-0255A	PLATE,FUEL TANK HOLDER-FR	1						
9	TD26-0255B	PLATE, FUEL TANK HOLDER-FR	1					<----->	
10	04512-50100	SPRING WASHER	1						M10
11	02176-50100	NUT v	2						M10XP1.25
12	01123-50855	BOLT, WASHER v	1						M8XP1.25
13	02751-50080	FLANGE NUT 8MMX1.25P	1						M8XP1.25
14	T5270-55241	RUBBER	3 UGG700093 ~ UGG700092						
14	T5270-55241	RUBBER	4					<------	
15	TD26-0257A	PLATE,FUEL TANK HOLDER-RR	1						
15	TD26-0257B	PLATE, FUEL TANK HOLDER-RR	1 VGG700005 ~ WGG700024					<----->	

----> Old replace New <---- New replace Old <-X-> Not interchangeable
<---> Interchangeable <-O-> Interchangeable with another part(s)
* Please place an order assy(*)

https://tractormanualz.com/

TD2-G671003

FUEL TANK GROUP

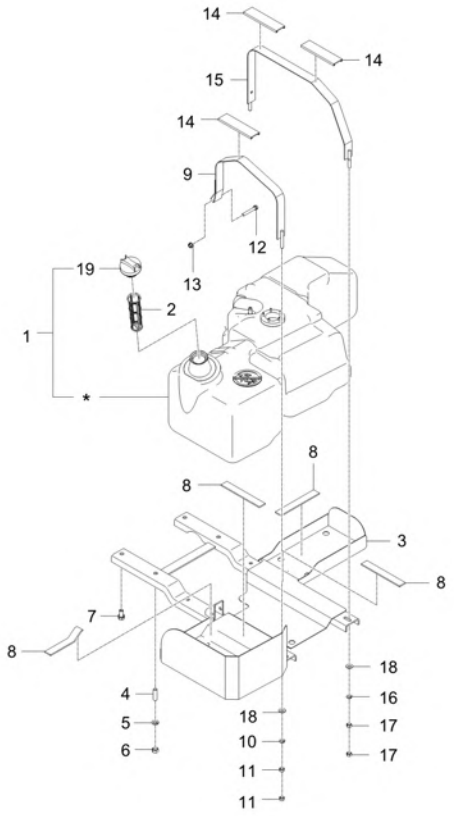

A : DK6010HSE

No.	Part Number	Description	Qty A	Qty B	Qty C	Qty D	Qty E	I.C	Remark
16	04512-50100	SPRING WASHER	2						M10
17	02176-50100	NUT v	4						M10XP1.25
18	04013-50100	PLAIN WASHER	2						M10
19	T2611-54825	ASSY, FUEL CAP v	1						

----> Old replace New <---- New replace Old <-X-> Not interchangeable
<---> Interchangeable <-O-> Interchangeable with another part(s)
* Please place an order assy(*)

https://tractormanualz.com/

TD2-G682002

CHECK LINK GROUP

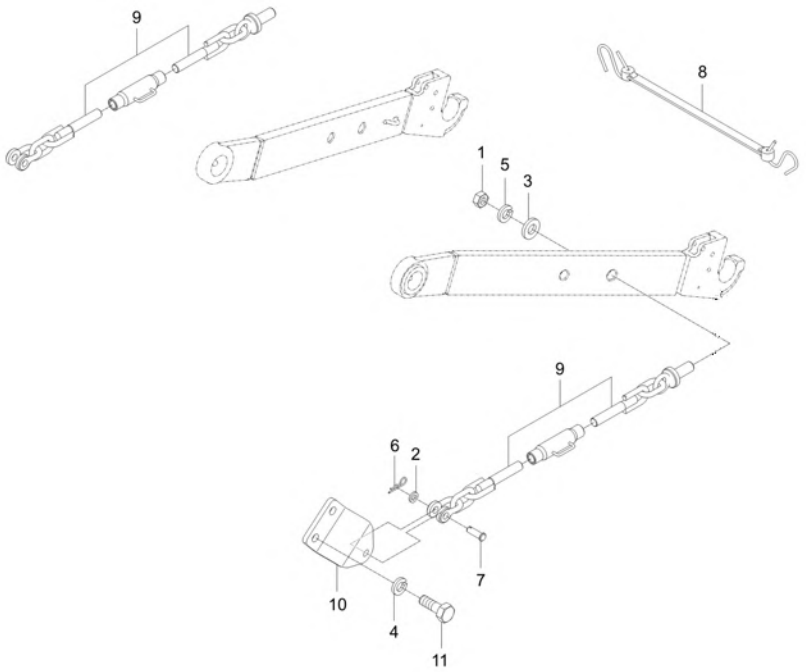

A : DK6010HSE

No.	Part Number	Description	Qty A	Qty B	Qty C	Qty D	Qty E	I.C	Remark
1	02176-50180	NUT	2						
2	04013-50120	PLAIN WASHER	2						M12
3	04015-50160	WASHER	2						
4	04512-50140	SPRING WASHER	6						
5	04512-50180	WASHER, SPRING	2						M18
6	05515-51200	SPLIT PIN	2						DIA12
7	32353-7189-3TP	PIN, CHECK CHAIN	2						-
8	T2610-21321	ASSY,CHECK LINK(RUBBER)	1						
9	TC26-1298A	ASSY LINK,CHECK v	2						
10	T5710-54662	CHECKCHAINHOLDER v	2						-
11	T5710-54711	BOLT	6						M14*2.0*32

----> Old replace New
<---- New replace Old
<-X-> Not interchangeable
<---> Interchangeable
<-O-> Interchangeable with another part(s)
* Please place an order assy(*)

https://tractormanualz.com/

TD2-G684003

LIFT ROD GROUP

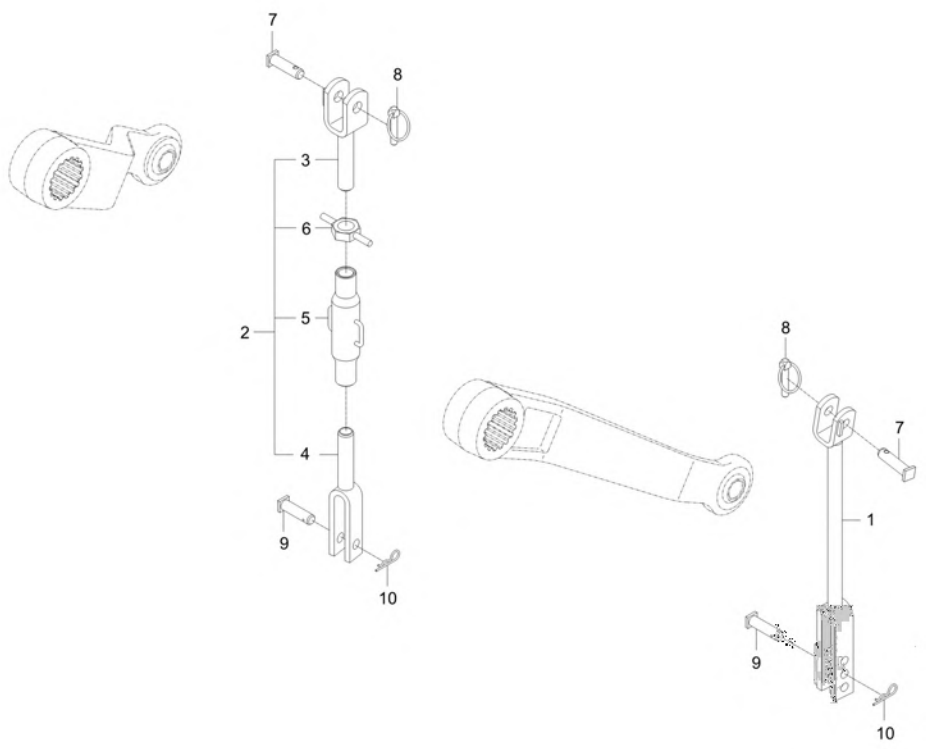

A : DK6010HSE

No.	Part Number	Description	Qty A	Qty B	Qty C	Qty D	Qty E	I.C	Remark
1	T5715-54811	ROD, LIFT	1						N
2	T2630-85411	ASSY, LIFT ROD v	1						
3	T2630-85421	ROD, LIFT UPR	1						
4	T2630-85431	ROD, LIFT LWR r v dnr	1						
5	T2630-85441	ROD, LIFT BODY	1						
6	T4620-85451	NUT	1						
7	T4620-85471TP	PIN, LIFT ROD	2						
8	34150-3764-4TP	PIN,CLIP	2						DIA10.0
9	34354-7158-3TP	PIN	2						
10	05515-51600	PIN, SNAP	2						

----> Old replace New <---- New replace Old <-X-> Not interchangeable
<---> Interchangeable <-O-> Interchangeable with another part(s)
* Please place an order assy(*)

https://tractormanualz.com/

TD2-G685001

3 POINT LINKAGE GROUP

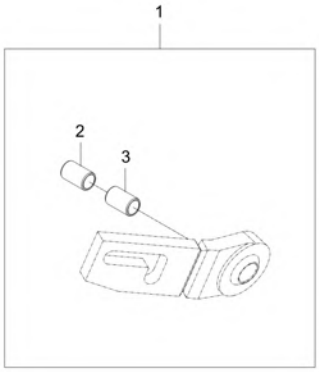

A : DK6010HSE

No.	Part Number	Description	Qty A	Qty B	Qty C	Qty D	Qty E	I.C	Remark
1	T5270-A15050201	KIT	1						
2	T4686-85341	COLLAR	1						
3	T5275-95341	COLLAR	2						

----> Old replace New
<---> Interchangeable
* Please place an order assy(*)
<---- New replace Old
<-O-> Interchangeable with another part(s)
<-X-> Not interchangeable

https://tractormanualz.com/

TD2-G631002

ROPS BAR GROUP

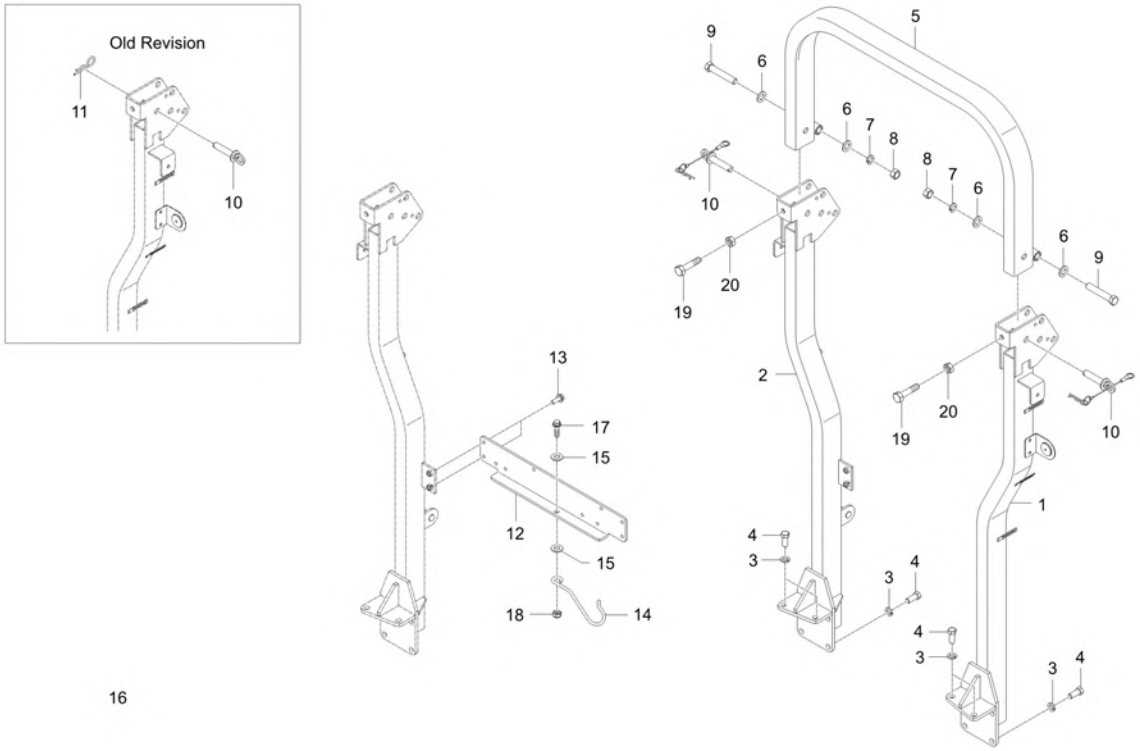

A : DK6010HSE

No.	Part Number	Description	Qty A	Qty B	Qty C	Qty D	Qty E	I.C	Remark
1	T5715-55236	SUPPORT, LH	1 TGG700001 ~ WGG700016						-
1	T5715-55237	SUPPORT, LH	1 WGG700017 ~ WGG700024					<----->	-
2	T5715-55257	SUPPORT,RH	1 TGG700001 ~ WGG700016						-
2	T5715-55258	SUPPORT, RH	1 WGG700017 ~ WGG700024					<----->	-
3	04512-50140	SPRING WASHER	10						
4	T2230-85242	BOLT	10						M14*2.0*32
5	T5715-55202	ROPS ASSY	1						N
5	TD26-0916A	ASSYROPS	1 UGG700001 ~ WGG700016					<--O-->	-
5	TD26-0916B	ASSY ROPS	1 WGG700017 ~ WGG700024					<----->	-
6	04011-50160	PLAIN WASHER	4						M16
7	04512-50160	WASHER, SPRING	2						M16
8	02176-50160	NUT v	2						M16*P1.5
9	01173-51690	BOLT	2						
10	T2185-97153	PIN, SET B(ROPS)	2 ~ VGG700016						
10	TC26-1717B	PIN, ROPS FIXING	2					<------	-
11	05515-51600	PIN, SNAP	2						
12	T5710-55274	SUPPORT	1						T6.0
13	01135-51025	BOLT WITH WASHER	4						M8*1.25

----> Old replace New
<----> Interchangeable
* Please place an order assy(*)
<---- New replace Old
<-O-> Interchangeable with another part(s)
<-X-> Not interchangeable

https://tractormanualz.com/

TD2-G631002

ROPS BAR GROUP

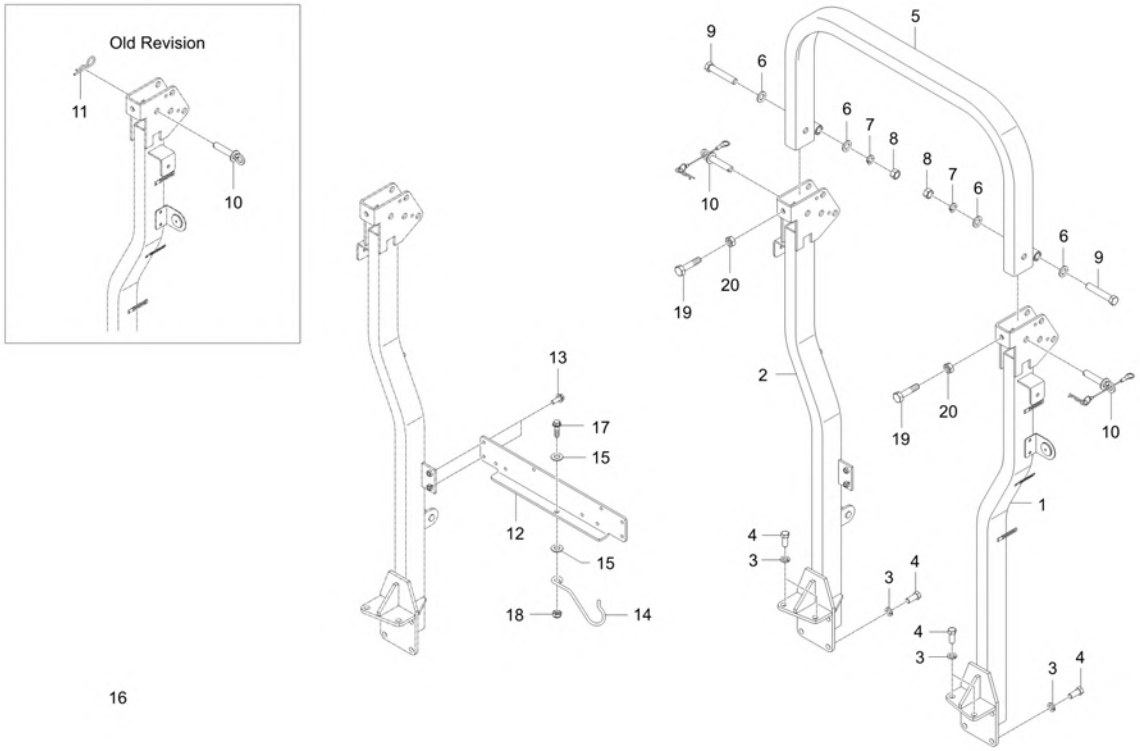

A : DK6010HSE

No.	Part Number	Description	Qty A	Qty B	Qty C	Qty D	Qty E	I.C	Remark
14	T5410-48081	CLIP,TOP LINK	1						
15	04013-50100	PLAIN WASHER	2						M10
16	T4835-17241	SPRING	2						
17	01774-51030	FLANGE BOLT	1						
18	41182-5151-1	NUT, REMOVE CHECK	1						DIA10
19	T5710-55311	BOLT	2						M12XP1.75
20	02114-50120	NUT	1						M12*P1.75

----> Old replace New
<----> Interchangeable
* Please place an order assy(*)
<---- New replace Old
<-O-> Interchangeable with another part(s)
<-X-> Not interchangeable

https://tractormanualz.com/

TD2-G651002

STEERING WHEEL GROUP

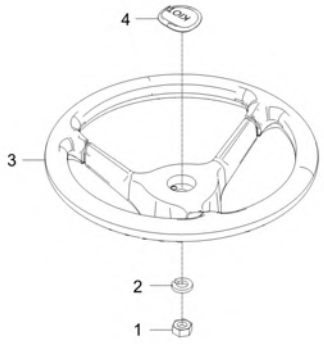

A : DK6010HSE

No.	Part Number	Description	Qty A	Qty B	Qty C	Qty D	Qty E	I.C	Remark
1	02176-50120	NUT	1						M12XP1.25
2	04512-50120	SPRING WASHER	1						M12
3	T2555-55462	STEERING WHEEL v	1						-
4	T5245-55461	CAP, HANDLE 3 sided v	1						
4	T5245-55462	CAP,HANDLE	1					<------	-

----> Old replace New
<---> Interchangeable
* Please place an order assy(*)
<---- New replace Old
<-O-> Interchangeable with another part(s)
<-X-> Not interchangeable

https://tractormanualz.com/

TD2-G681004

LOWER LINK GROUP

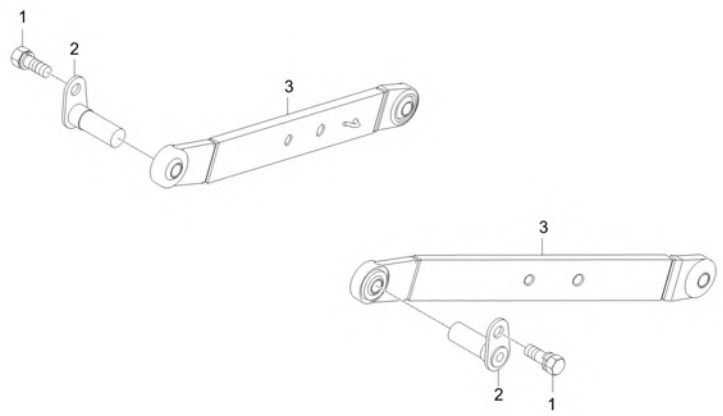

A : DK6010HSE

No.	Part Number	Description	Qty A	Qty B	Qty C	Qty D	Qty E	I.C	Remark
1	01133-51025	BOLT	2						M10XP1.25
2	T4240-28533	PIN, LOWER LINK	2						
3	TD26-0568A	ASSYLINK,LOWER-BALL(CAT.2)	2						

----> Old replace New <---- New replace Old <-X-> Not interchangeable
<---> Interchangeable <-O-> Interchangeable with another part(s)
* Please place an order assy(*)

https://tractormanualz.com/

TD2-G683002

TOP LINK GROUP

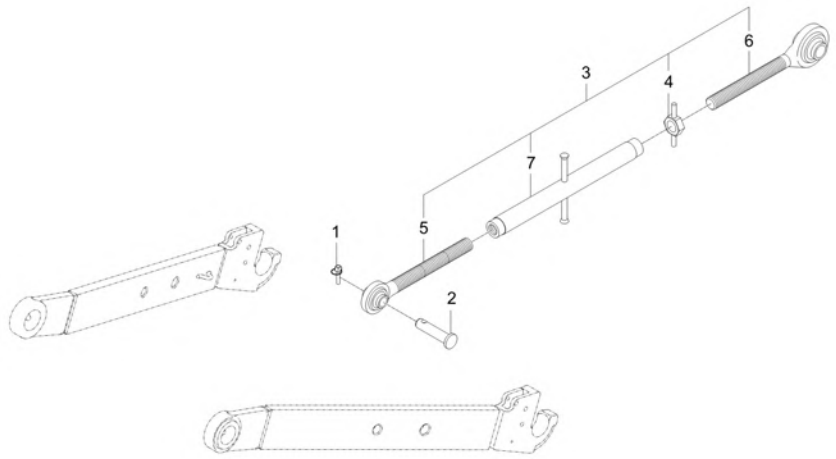

A : DK6010HSE

No.	Part Number	Description	Qty A	Qty B	Qty C	Qty D	Qty E	I.C	Remark
1	34150-3764-4	PIN,CLIP	1						DIA10.0
2	T5710-37631	PIN TOP LINK	1						
3	T5718-54601	TOPLINKASSY	1						N
4	T4620-85451	NUT	1						
5	T5410-71122	JOINT TOP LINK	1						
6	T5528-58451	HOUSING RHTOP LINK	1						
7	T5710-54621	TOP-LINK	1						N

----> Old replace New
<----> Interchangeable
* Please place an order assy(*)
<---- New replace Old
<-O-> Interchangeable with another part(s)
<-X-> Not interchangeable

https://tractormanualz.com/

TD2-G692001

DRAWBAR GROUP

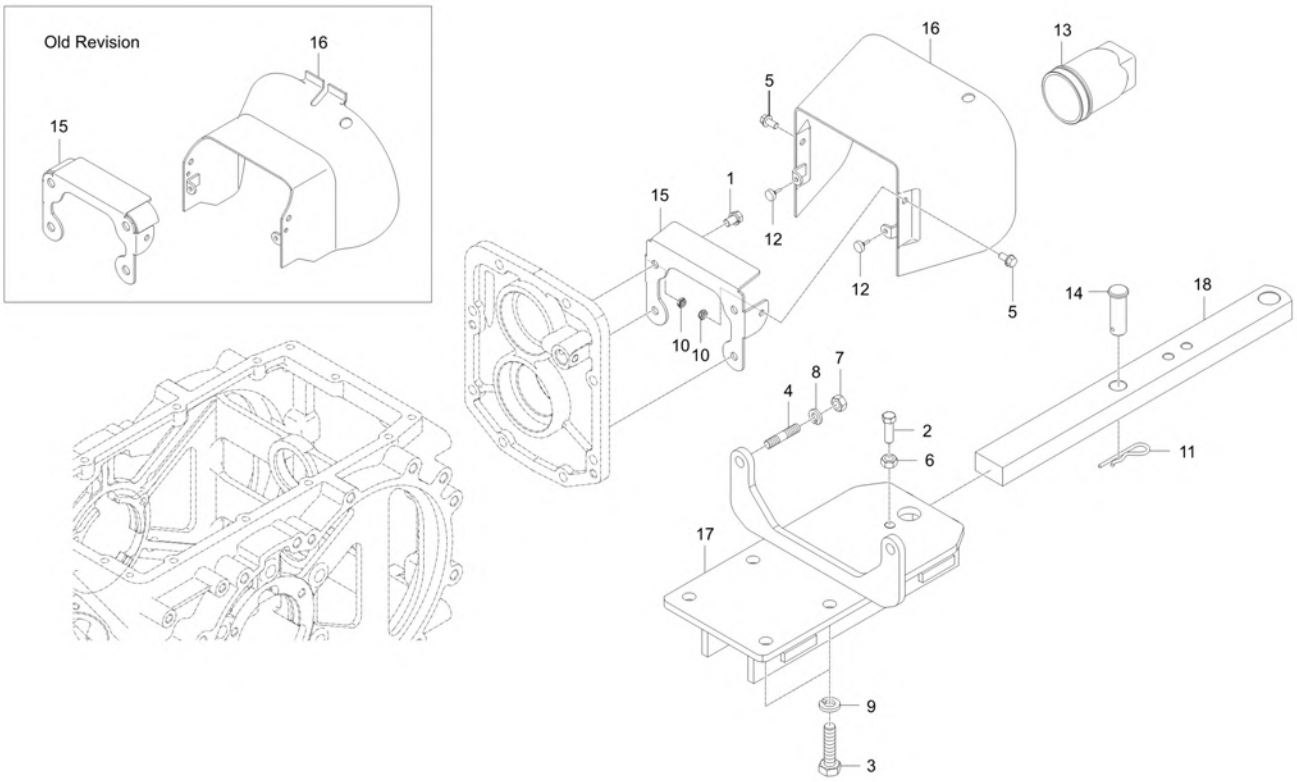

A : DK6010HSE

No.	Part Number	Description	Qty A	Qty B	Qty C	Qty D	Qty E	I.C	Remark
1	01133-51016	BOLT	4						M10*P1.25
2	01173-51230	BOLT v	1						M12P1.25*30
3	01173-51435	BOLT v	4						M14XP1.5
4	01574-51230	STUD	2						
5	01754-50816	BOLT, FLANGE	2						M8XP1.25
6	02176-50120	NUT	1						M12XP1.25
7	02176-50120	NUT	2						M12XP1.25
8	04512-50120	SPRING WASHER	2						M12
9	04512-50140	SPRING WASHER	4						
10	41011-5151-4	NUT, LOCK (M8) v	2						
11	70515-1633-4	SNAP PIN	1						DIA5.0
12	K9100-50241	CHSSING	2						
13	T2181-25442	COVER, PTO SHAFT v	1						
14	T2445-29781	PIN,JOINT	1						DIA25
15	T5715-55011	BRACKET	1 ~ WGG700016						
15	TC26-1690A	BRACKET, PTO PROTECTION COVER	1 WGG700017 ~ WGG700024					<--O-->	T3.2
16	T5715-55021	COVER, PTO	1 ~ WGG700016						
16	TC26-1689A	COVER, PTO PROTECTION	1 WGG700017 ~ WGG700024					<--O-->	

----> Old replace New <---- New replace Old <-X-> Not interchangeable
<---> Interchangeable <-O-> Interchangeable with another part(s)
* Please place an order assy(*)

https://tractormanualz.com/

TD2-G692001

DRAWBAR GROUP

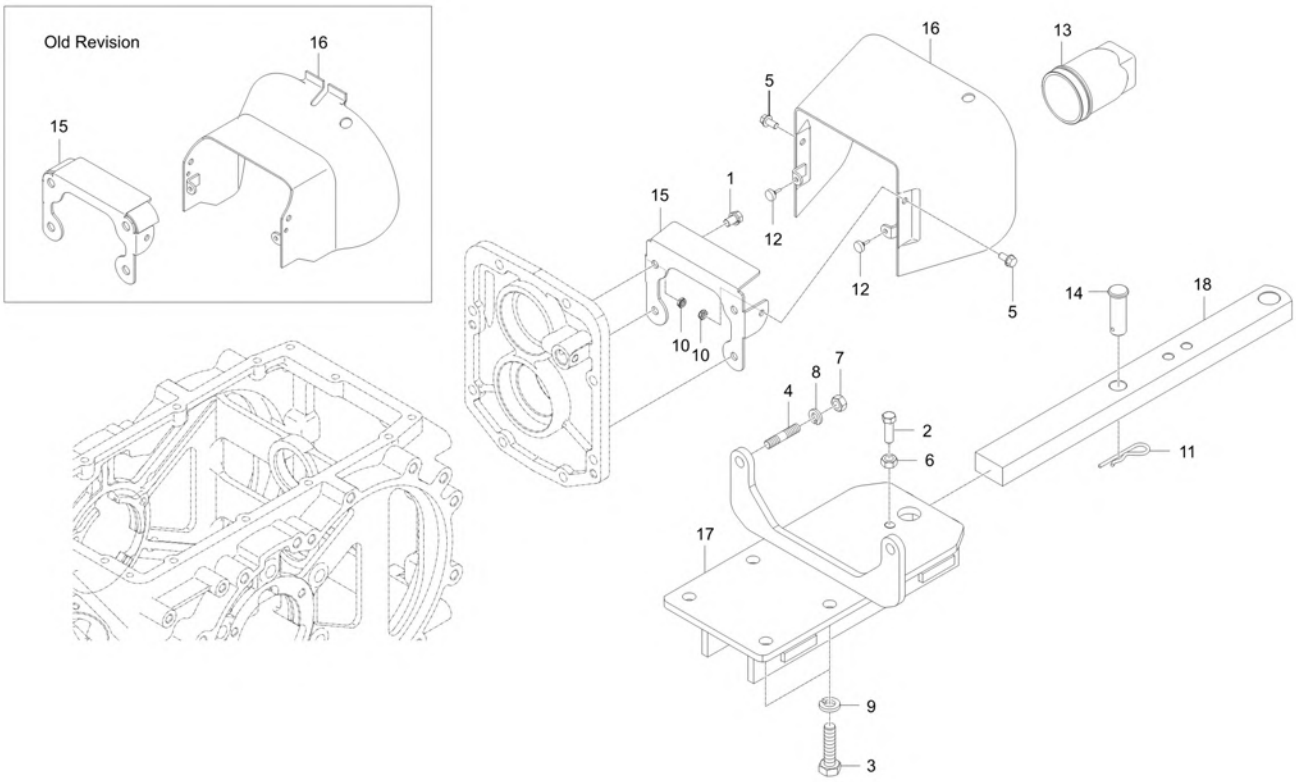

A : DK6010HSE

No.	Part Number	Description	Qty A	Qty B	Qty C	Qty D	Qty E	I.C	Remark
17	TD26-0148A	FRAME,DRAWBER	1						-
18	TD26-0151A	DRAWBAR v	1						

----> Old replace New
<---- New replace Old
<-X-> Not interchangeable
<---> Interchangeable
<-O-> Interchangeable with another part(s)
* Please place an order assy(*)

https://tractormanualz.com/

TD2-G6D4002

LABEL(FRAME) GROUP

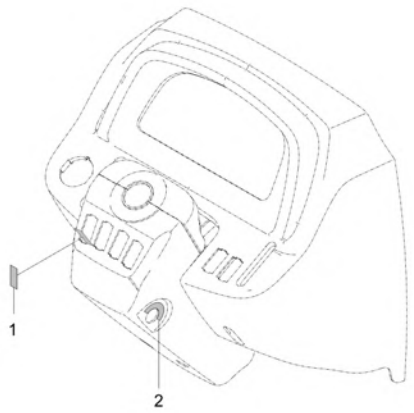

A : DK6010HSE

No.	Part Number	Description	Qty A	Qty B	Qty C	Qty D	Qty E	I.C	Remark
1	T4125-53121	LABEL,PARKING	1						
2	T5248-52101	DECAL KEY SWITCH v	1						
2	T5248-52102	LABEL, START SWITCH	1					<------	

----> Old replace New
<---> Interchangeable
* Please place an order assy(*)
<---- New replace Old
<-O-> Interchangeable with another part(s)
<-X-> Not interchangeable

https://tractormanualz.com/

TD2-G6F0502

SMV BRACKET GROUP

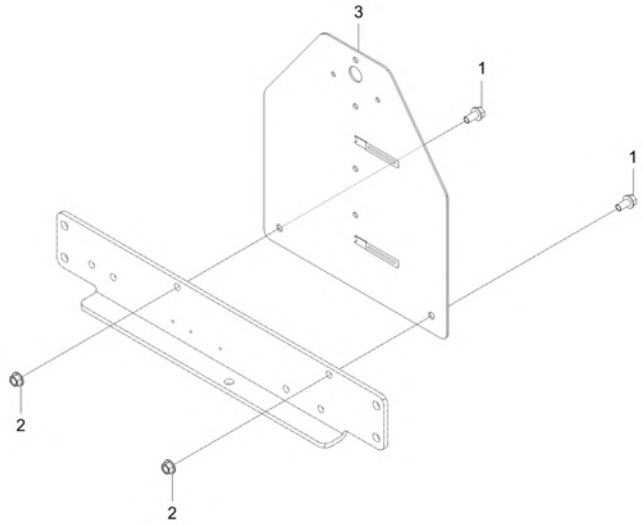

A : DK6010HSE

No.	Part Number	Description	Qty A	Qty B	Qty C	Qty D	Qty E	I.C	Remark
1	01754-50816	BOLT, FLANGE	2						M8XP1.25
2	02763-50080	FLANGE NUT	2						M8XP1.25
3	T2185-70482	BRACKET,SMV	1						

----> Old replace New
<---- New replace Old
<-X-> Not interchangeable
<---> Interchangeable
<-O-> Interchangeable with another part(s)
* Please place an order assy(*)

https://tractormanualz.com/

TD2-G6F6001

7 PIN SOCKET GROUP

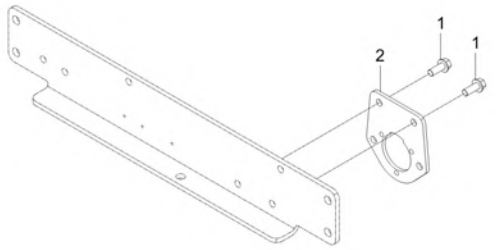

A : DK6010HSE

No.	Part Number	Description	Qty A	Qty B	Qty C	Qty D	Qty E	I.C	Remark
1	01754-50820	BOLT, FLANGE	2						M8XP1.25
2	02751-50080	FLANGE NUT 8MMX1.25P	2						M8XP1.25
3	TD26-0007A	PLATE	1						T4.5

----> Old replace New
<---> Interchangeable
* Please place an order assy(*)
<---- New replace Old
<-O-> Interchangeable with another part(s)
<-X-> Not interchangeable

https://tractormanualz.com/

TC2-G6G4101

ARM REST GROUP(OPTION)

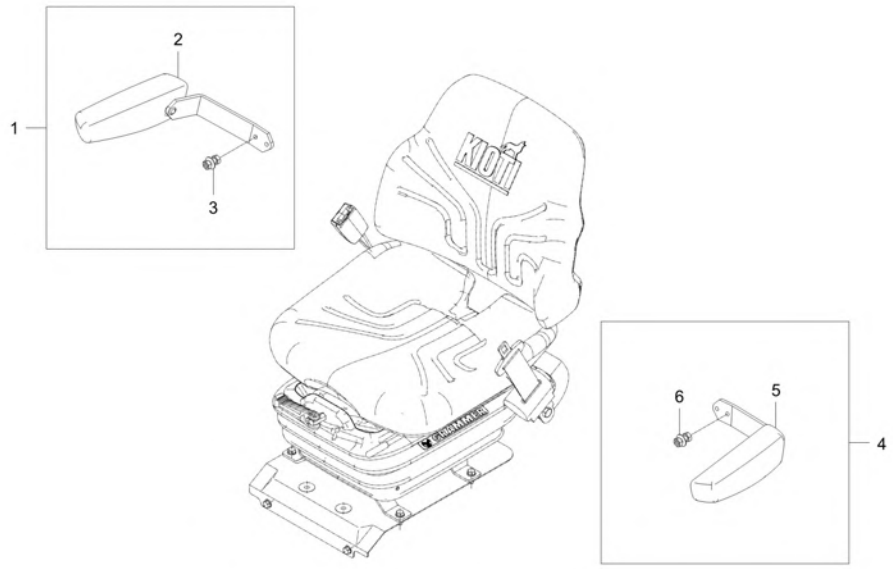

A : DK6010HSE

No.	Part Number	Description	Qty A	Qty B	Qty C	Qty D	Qty E	I.C	Remark
1	TC26-A0113A	KIT, ARMREST-RH	1						
2	TC26-1782A	ARMREST-RH CPL	1						
3	TC26-1791A	FASTENER-ARMREST CPL	1						
4	TC26-A0114A	KIT, ARMREST-LH	1						
5	TC26-1783A	ARMREST-LH CPL	1						
6	TC26-1791A	FASTENER-ARMREST CPL	1						

----> Old replace New
<----> Interchangeable
* Please place an order assy(*)
<---- New replace Old
<-O-> Interchangeable with another part(s)
<-X-> Not interchangeable

https://tractormanualz.com/

TD2-G2M2001

MID PTO GROUP(OPTION)

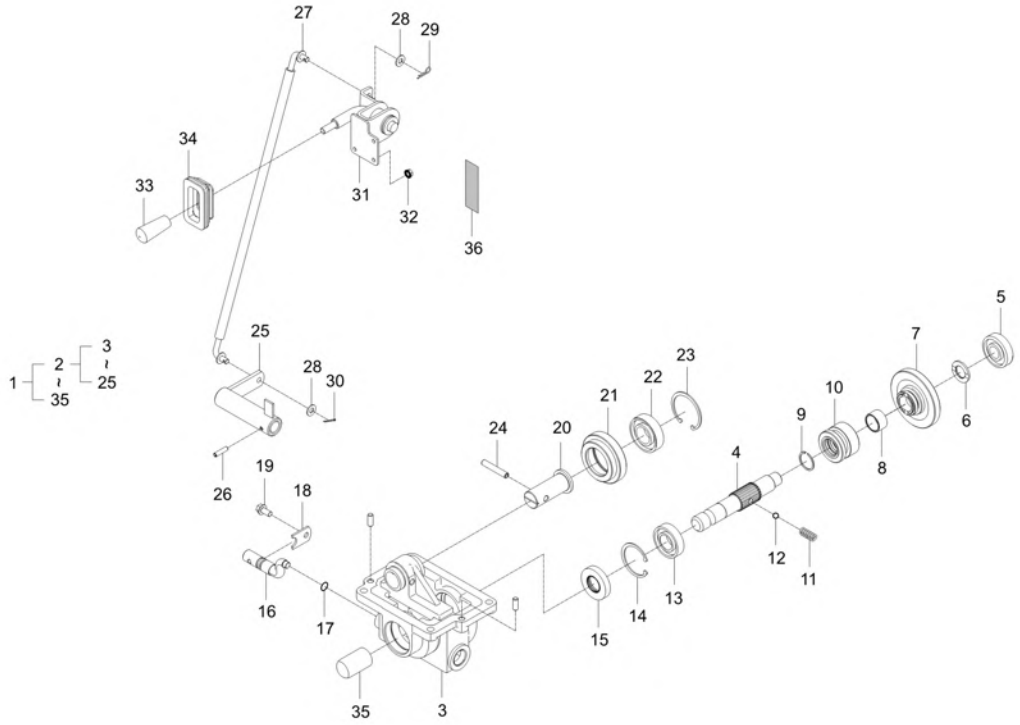

A : DK6010HSE

No.	Part Number	Description	Qty A	Qty B	Qty C	Qty D	Qty E	I.C	Remark
1	TD22-A0023B	MID PTO KIT	1						
2	TD22-0076A	ASSYSHAFT,MIDPTO	1						
3	TD22-0074C	CASE,MIDPTO	1						
4	TD22-0073A	SHAFT,MIDPTO	1						
5	T2555-06304	BALL BEARING	1						#6304, GMB CHINA
6	31365-2278-1	COLLAR	1						
7	TD22-0072C	GEAR-27	1						
8	08822-53017	NEEDLE BEARING	1						NTN,K25301 7
9	T2610-14541	CIR-CLIP	1						T1.5 28
10	T5815-24142	SHIFTER	1						
11	T2440-44251	SPRING	1						DIA1.4
12	07715-01605	BALL,STEEL	2						5/16"
13	T2555-06205	BALL BEARING	1						#6205, GMB CHINA
14	04611-00520	SNAP RING	1						
15	09502-55210	SEAL OIL v	1						DIA25
16	T5815-24232	ARM, SHIFT MID PTO	1						
17	04811-00140	O RING	1						
18	T2555-23331	STOPPER	1						

----> Old replace New <---- New replace Old <-X-> Not interchangeable
<---> Interchangeable <-O-> Interchangeable with another part(s)
* Please place an order assy(*)

https://tractormanualz.com/

TD2-G2M2001

MID PTO GROUP(OPTION)

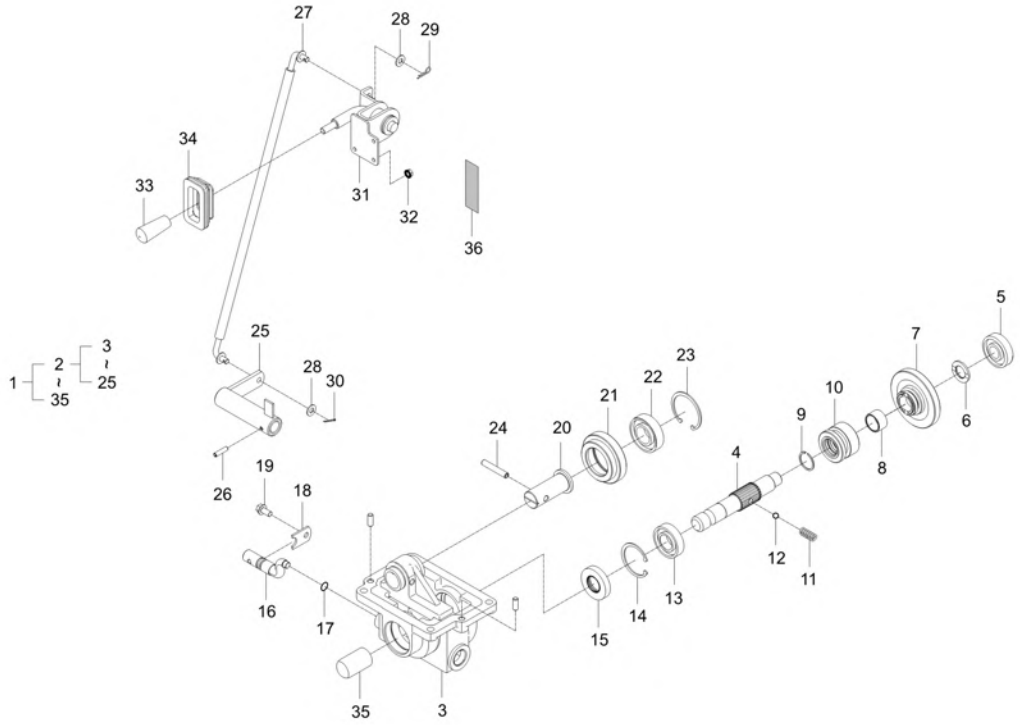

A : DK6010HSE

No.	Part Number	Description	Qty A	Qty B	Qty C	Qty D	Qty E	I.C	Remark
19	01754-50816	BOLT, FLANGE	1						M8XP1.25
20	TD22-0082A	SHAFT,IDLE	1						
21	TD22-0081B	GEAR-23	1						
22	K2400-21161		1						#62/28
23	04611-00580	RING SNAP	1						58
24	05411-00850	PIN,SPRING	1						8*50
25	TD26-0391A	LEVER,MIDPTO1	1						
26	05411-00630	PIN, SPRING	1						DIA6*30
27	TD26-0388A	ROD	1						
28	04013-50080	PLAIN WASHER	2						M8
29	05511-50220	PIN, SPLIT	1						DIA1.8XL20
30	05525-50800	PIN, SNAP	1						DIA8
31	T5525-83972	BRACKET	1						
32	02761-50060	NUT, FLANGE	3						M6XP1.0
33	T4157-24281	GRIP	1						
34	T4601-65031	BOOT	1						
35	T2555-60991	COVER, MID PTO	1						
36	T4145-53191	LABEL, MID PTO	1						T0.05 ~ 0.08

----> Old replace New <---- New replace Old <-X-> Not interchangeable
<---> Interchangeable <-O-> Interchangeable with another part(s)
* Please place an order assy(*)

https://tractormanualz.com/

TD2-G2M2002

MID PTO GROUP(OPTION)

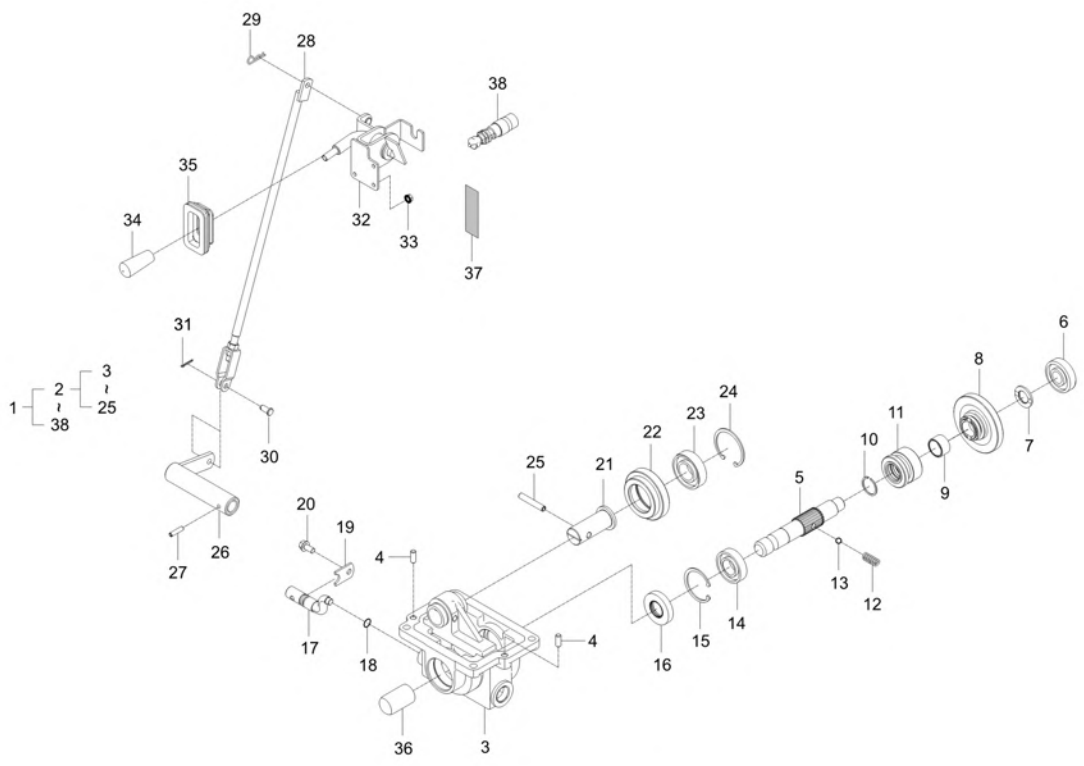

A : DK6010HSE

No.	Part Number	Description	Qty A	Qty B	Qty C	Qty D	Qty E	I.C	Remark
1	TD22-A0044A	MID PTO KIT	1						
2	TD22-0076A	ASSYSHAFT,MIDPTO	1						
3	TD22-0074C	CASE,MIDPTO	1						
4	05012-00818	PIN, PARALLEL	2						
5	TD22-0073A	SHAFT,MIDPTO	1						
6	T2555-06304	BALL BEARING	1						#6304, GMB CHINA
7	31365-2278-1	COLLAR	1						
8	TD22-0072C	GEAR-27	1						
9	08822-53017	NEEDLE BEARING	1						NTN,K253017
10	T2610-14541	CIR-CLIP	1						T1.5 28
11	T5815-24142	SHIFTER	1						
12	T2440-44251	SPRING	1						DIA1.4
13	07715-01605	BALL,STEEL	2						5/16"
14	T2555-06205	BALL BEARING	1						#6205, GMB CHINA
15	04611-00520	SNAP RING	1						
16	09502-55210	SEAL OIL v	1						DIA25
17	T5815-24232	ARM, SHIFT MID PTO	1						
18	04811-00140	O RING	1						

----> Old replace New <---- New replace Old <-X-> Not interchangeable
<---> Interchangeable <-O-> Interchangeable with another part(s)
* Please place an order assy(*)

https://tractormanualz.com/

TD2-G2M2002

MID PTO GROUP(OPTION)

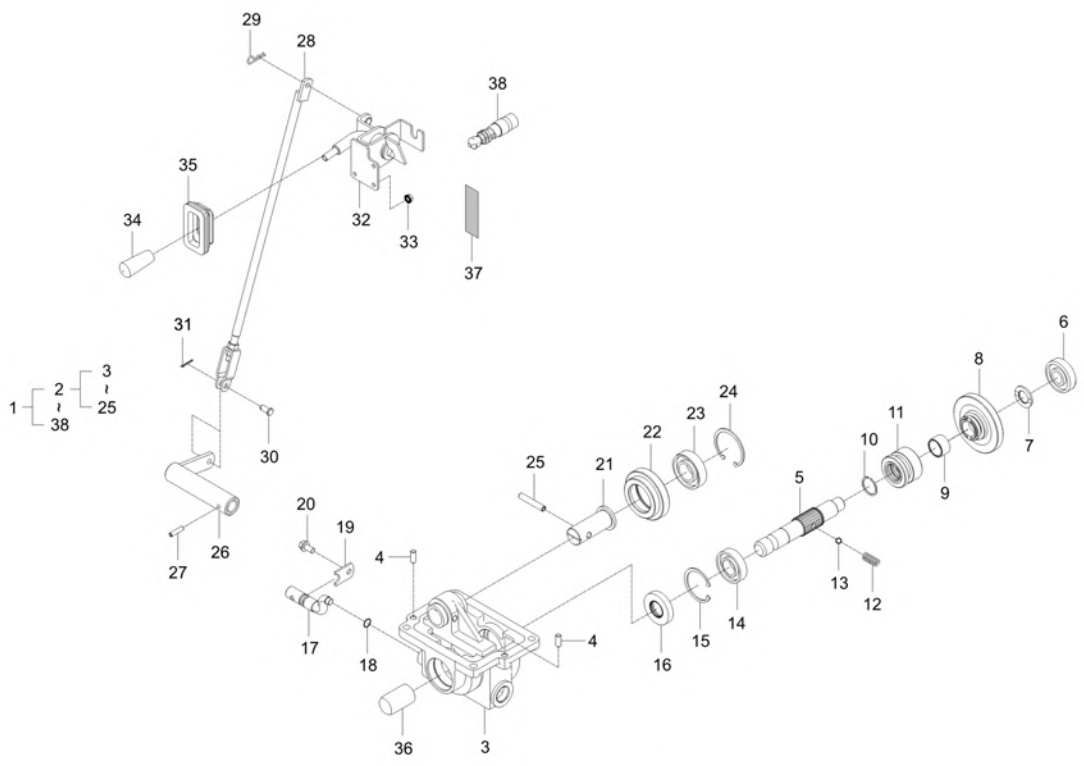

A : DK6010HSE

No.	Part Number	Description	Qty A	Qty B	Qty C	Qty D	Qty E	I.C	Remark
19	T2555-23331	STOPPER	1						
20	01754-50816	BOLT, FLANGE	1						M8XP1.25
21	TD22-0082A	SHAFT,IDLE	1						
22	TD22-0081B	GEAR-23	1						
23	K2400-21161		1						#62/28
24	04611-00580	RING SNAP	1						58
25	05411-00850	PIN,SPRING	1						8*50
26	TD26-1103A	LEVER, MID PTO 1	1						
27	05411-00630	PIN, SPRING	1						DIA6*30
28	TD26-1105A	ROD	1						
29	05525-50800	PIN, SNAP	1						DIA8
30	05122-50818	PIN,JOINT	1						
31	05511-50220	PIN, SPLIT	1						DIA1.8XL20
32	TD26-1107A	BRACKET	1						
33	02761-50060	NUT, FLANGE	3						M6XP1.0
34	T4157-24281	GRIP	1						
35	T4601-65031	BOOT	1						
36	T2555-60991	COVER, MID PTO	1						

----> Old replace New <---- New replace Old <-X-> Not interchangeable
<---> Interchangeable <-O-> Interchangeable with another part(s)
* Please place an order assy(*)

https://tractormanualz.com/

TD2-G2M2002

MID PTO GROUP(OPTION)

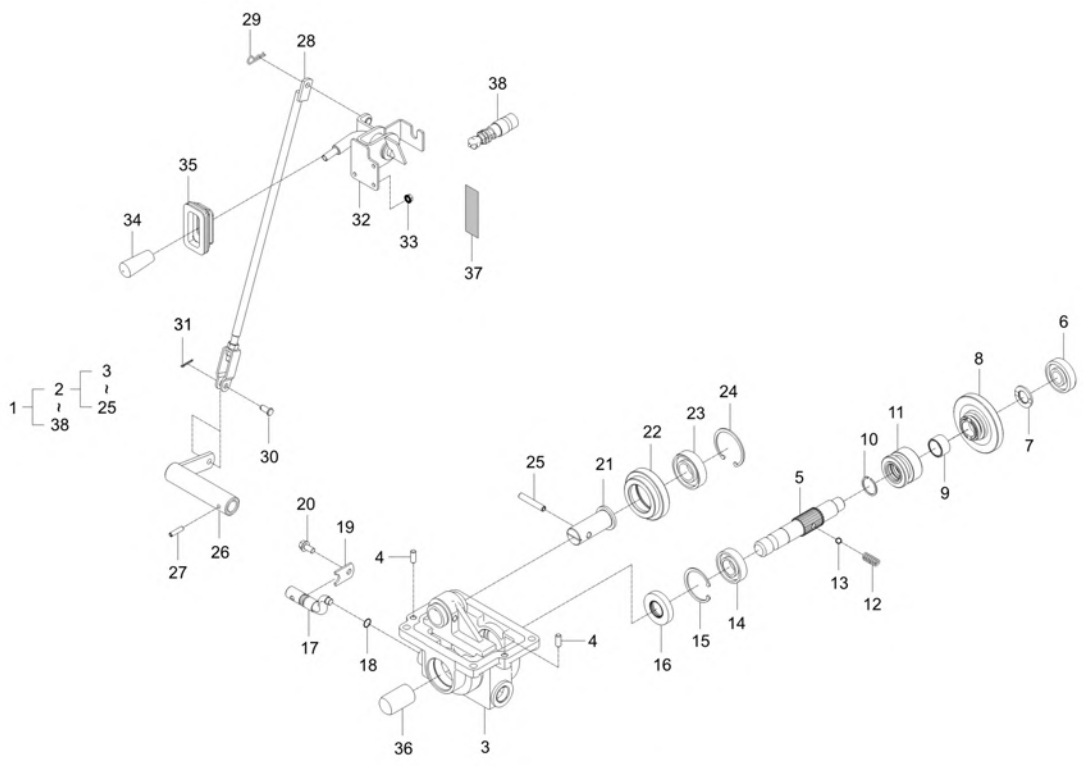

A : DK6010HSE

No.	Part Number	Description	Qty A	Qty B	Qty C	Qty D	Qty E	I.C	Remark
37	T4145-53191	LABEL, MID PTO	1						T0.05 ~ 0.08
38	T4257-67511	LIMIT SWITCH ASSAY, NO	1						

----> Old replace New
<----> Interchangeable
* Please place an order assy(*)
<---- New replace Old
<-O-> Interchangeable with another part(s)
<-X-> Not interchangeable

https://tractormanualz.com/

TD2-G446003

HYDRAULIC BLOCK GROUP

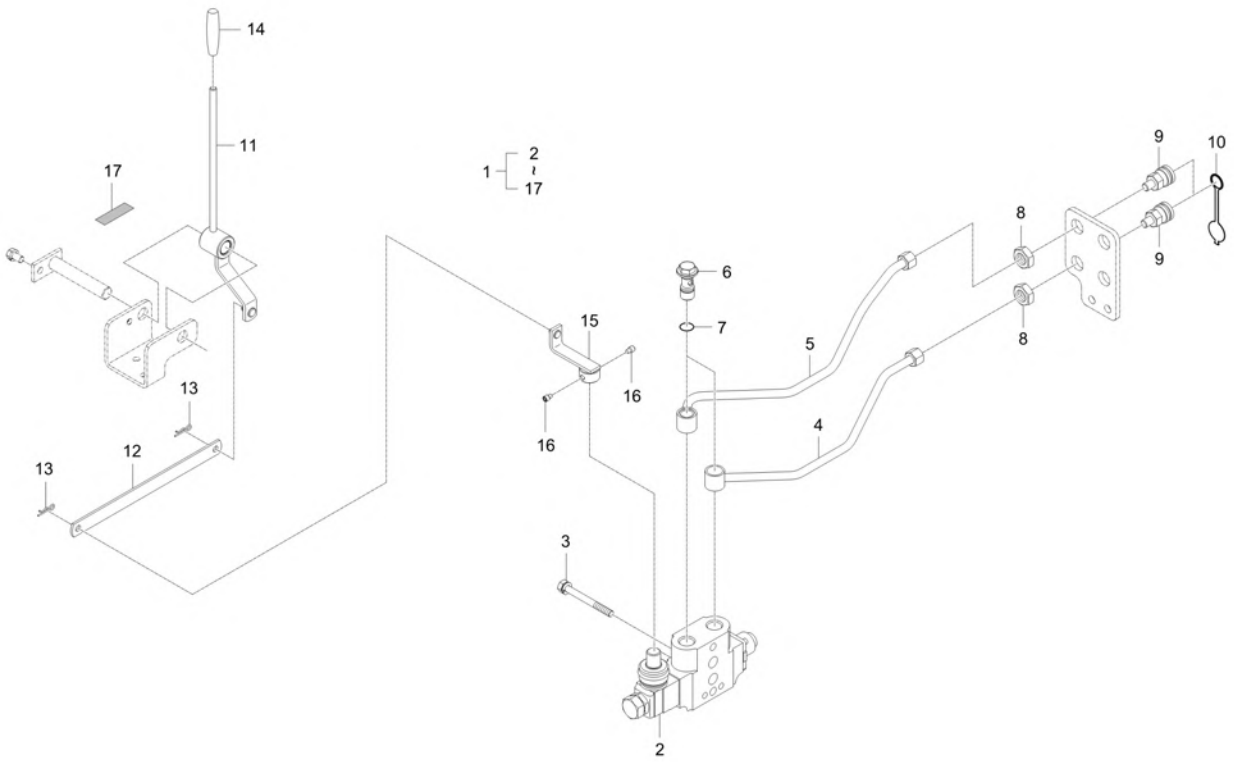

A : DK6010HSE

No.	Part Number	Description	Qty A	Qty B	Qty C	Qty D	Qty E	I.C	Remark
1	T5715-A6042	Double Acting Valve KIT	1						
1	T5715-A6043	Double Acting Valve KIT	1					<----->	
1	T5715-A6044	Double Acting Valve KIT	1					<----->	
1	T5715-A6045	Double Acting Valve KIT	1					<----->	
2	T4157-39051	DOUBLE ACTING VALVE(DTSOP) v	1						
3	E6200-91092	BOLT WITH WASHER	2						HEX14,M10*1.25*125
4	T5710-35131	TUBE	1						
5	T5710-35142	TUBE	1						
6	T4620-37092	JOINT BOLT v	2						
6	TC24-0238A	BOLT, JOINT	2					<----->	
7	04816-00200	O RING	4						DIA19.8
7	04817-00200	O RING	4					<----->	DIA19.8
8	T4930-47071	NUT	2						M18XP1.5
9	T5710-30091	COUPLER,SELF-SEALING,AC,1-1-4 v	2						
9	TD24-0159A	COUPLER, QUICK	1					<----->	
10	T5520-90071	CAP, SOCKET	2						1/2
10	TF14-0123A	CAP, COUPLER SOCKET-1/2	2					<----->	1/2
11	T5710-54032	DOUBLEACTINGLEVER,RH	1						-

----> Old replace New
<---- New replace Old
<-X-> Not interchangeable
<---> Interchangeable
<-O-> Interchangeable with another part(s)
* Please place an order assy(*)

https://tractormanualz.com/

TD2-G446003

HYDRAULIC BLOCK GROUP

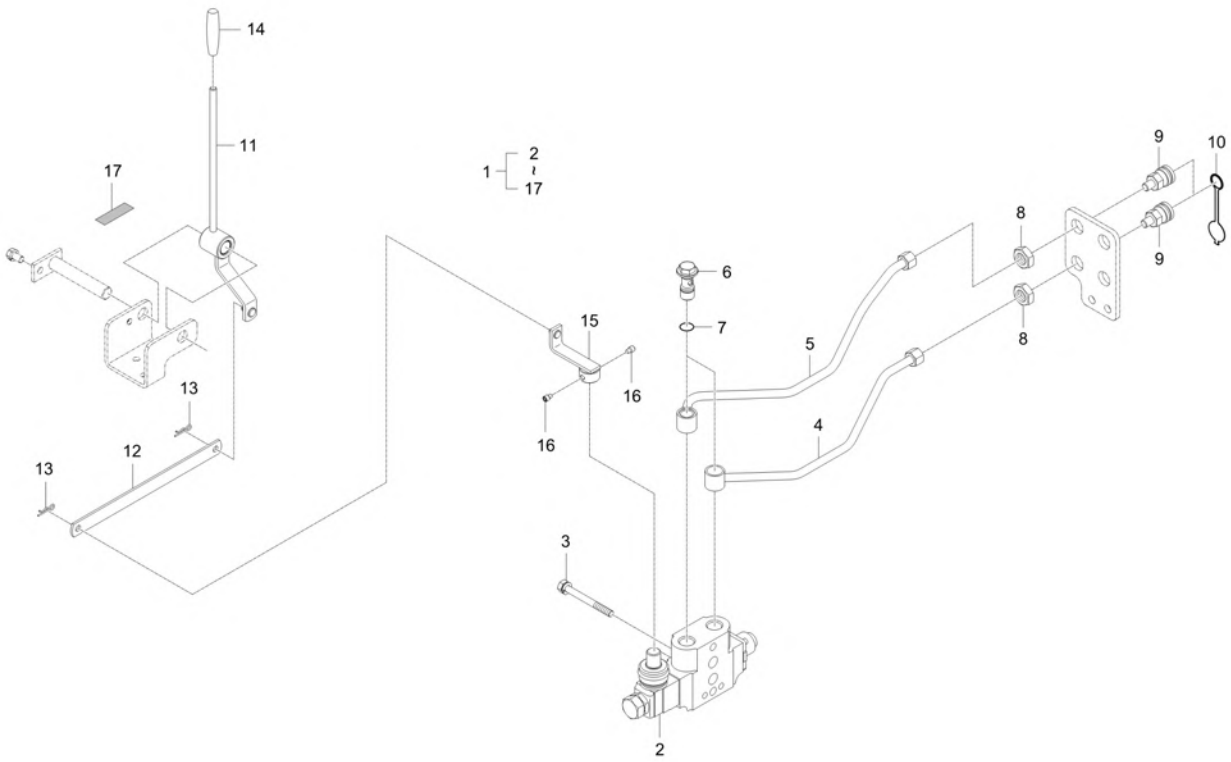

A : DK6010HSE

No.	Part Number	Description	Qty A	Qty B	Qty C	Qty D	Qty E	I.C	Remark
12	T5710-54051	ROD, DOUBLE ACTING	1						T3.0
13	05525-50800	PIN, SNAP	2						DIA8
14	T2185-71241	GRIP, DARK BLUE	1						
15	T5710-59081	LEVER, DOUBLE ACTING	1						N
16	T2610-39572	SCREW, SET	2						M8*P1.25
17	T4835-51232	LABEL,SINGLE DOUBLE ACTING LEVER	1						

----> Old replace New
<----> Interchangeable
* Please place an order assy(*)
<---- New replace Old
<-O-> Interchangeable with another part(s)
<-X-> Not interchangeable

https://tractormanualz.com/

TD2-G446004

HYDRAULIC BLOCK GROUP

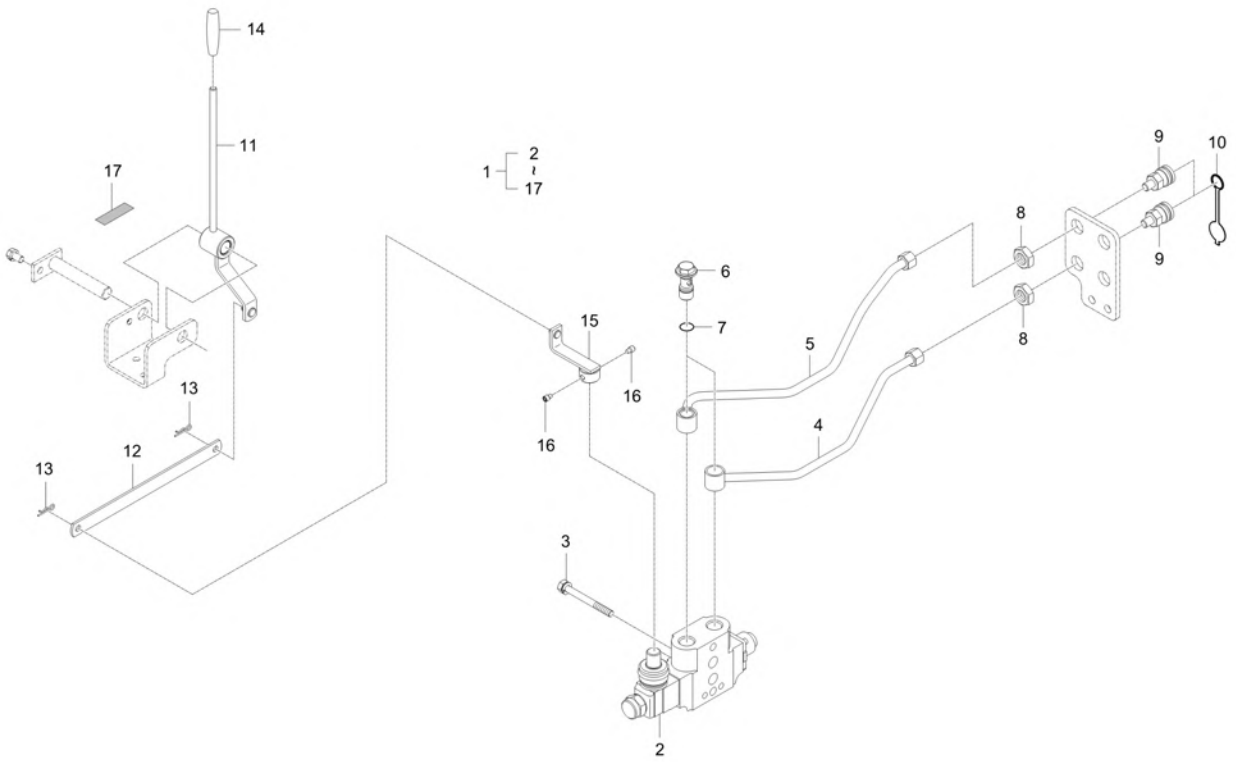

A : DK6010HSE

No.	Part Number	Description	Qty A	Qty B	Qty C	Qty D	Qty E	I.C	Remark
1	T5715-A6052	DETENT DOUBLE V/V	1						
1	T5715-A6053	DETENT DOUBLE V/V	1					<----->	
1	T5715-A6054	DETENT DOUBLE V/V	1					<----->	
1	T5715-A6055	DETENT DOUBLE V/V	1					<----->	
2	T5710-39031	DETENTDOUBLEV/V	1						
3	E6200-91092	BOLT WITH WASHER	2						HEX14,M10*1.25*125
4	T5710-35131	TUBE	1						
5	T5710-35142	TUBE	1						
6	T4620-37092	JOINT BOLT v	2						
6	TC24-0238A	BOLT, JOINT	2					<----->	
7	04816-00200	O RING	4						DIA19.8
7	04817-00200	O RING	4					<----->	DIA19.8
8	T4930-47071	NUT	2						M18XP1.5
9	T5710-30091	COUPLER,SELF-SEALING,AC,1-1-4 v	2						
9	TD24-0159A	COUPLER, QUICK	1					<----->	
10	T5520-90071	CAP, SOCKET	2						1/2
10	TF14-0123A	CAP, COUPLER SOCKET-1/2	2					<----->	1/2
11	T5710-54032	DOUBLEACTINGLEVER,RH	1						-

----> Old replace New
<---- New replace Old
<-X-> Not interchangeable
<---> Interchangeable
<-O-> Interchangeable with another part(s)
* Please place an order assy(*)

https://tractormanualz.com/

TD2-G446004

HYDRAULIC BLOCK GROUP

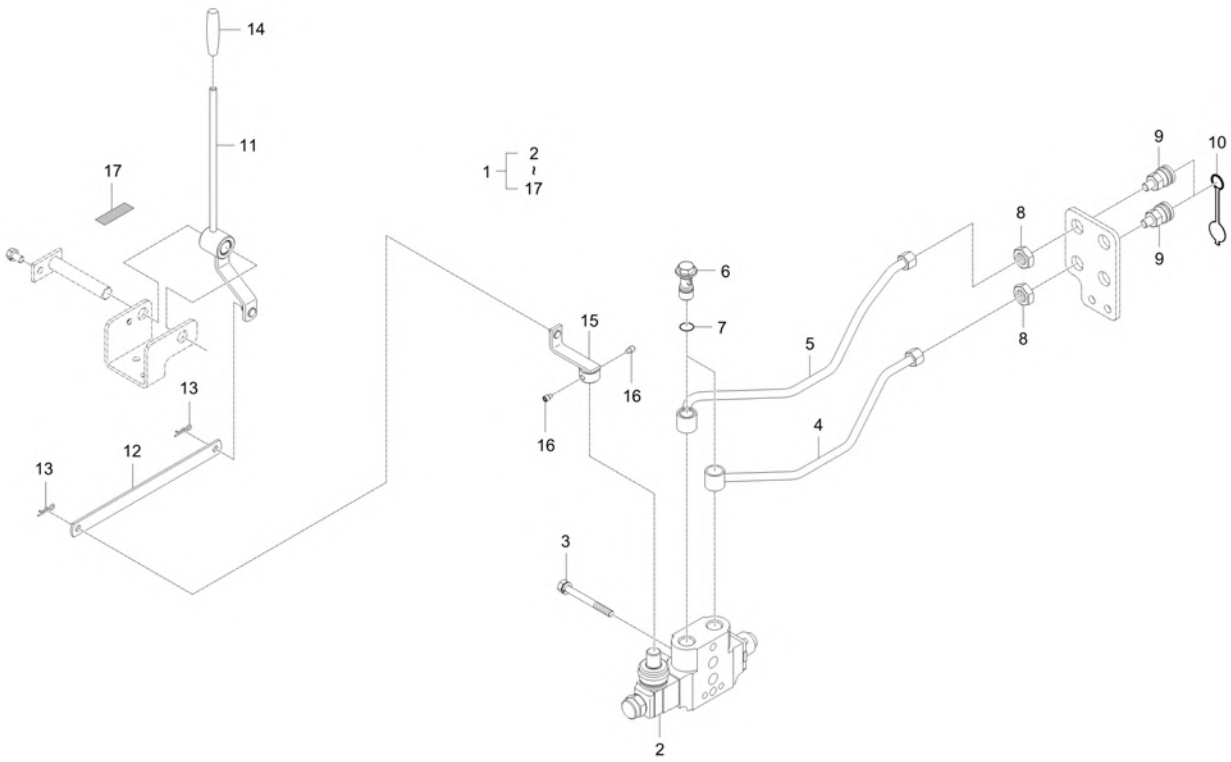

A : DK6010HSE

No.	Part Number	Description	Qty A	Qty B	Qty C	Qty D	Qty E	I.C	Remark
12	T5710-54051	ROD, DOUBLE ACTING	1						T3.0
13	05525-50800	PIN, SNAP	2						DIA8
14	T2185-71241	GRIP, DARK BLUE	1						
15	T5710-59081	LEVER, DOUBLE ACTING	1						N
16	T2610-39572	SCREW, SET	2						M8*P1.25
17	T4835-51232	LABEL,SINGLE DOUBLE ACTING LEVER	1						

----> Old replace New
<----> Interchangeable
* Please place an order assy(*)
<---- New replace Old
<-O-> Interchangeable with another part(s)
<-X-> Not interchangeable

https://tractormanualz.com/

TD2-G523002 REAR WORKING LAMP GROUP

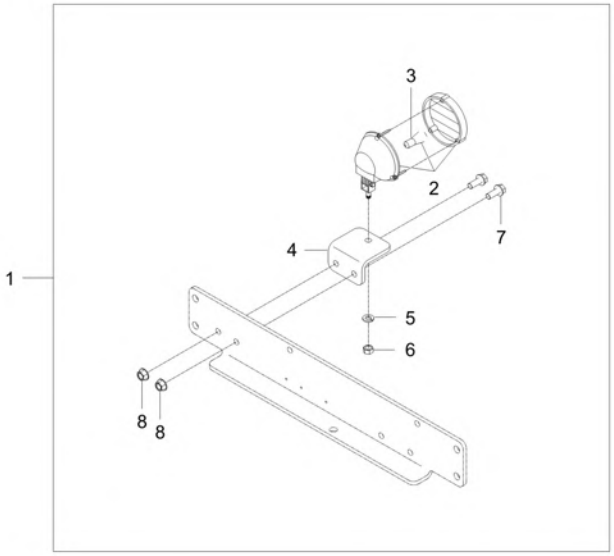

A : DK6010HSE

No.	Part Number	Description	Qty A	Qty B	Qty C	Qty D	Qty E	I.C	Remark
1	T5758-A7021	REAR WORKING LIGHT KIT	1						
2	T2350-46612	WORKING LIGHT ASSY	1						
3	T4620-69272	BULB (12V 21W)	1						12V21W (S25S)
4	T5710-55281	BRACKET	1						T6.0
5	04512-50080	SPRING WASHER	1						M08
6	02156-50080	NUT v	1						M8XP1.25
7	01754-50820	BOLT, FLANGE	2						M8XP1.25
8	02763-50080	FLANGE NUT	2						M8XP1.25

----> Old replace New <---- New replace Old <-X-> Not interchangeable
<---> Interchangeable <-O-> Interchangeable with another part(s)
* Please place an order assy(*)

https://tractormanualz.com/

TD2-G527002

POWER SOCKET GROUP

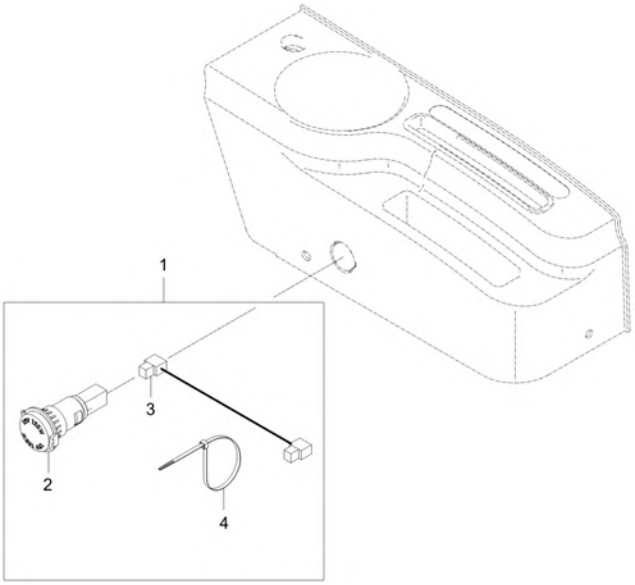

A : DK6010HSE

No.	Part Number	Description	Qty A	Qty B	Qty C	Qty D	Qty E	I.C	Remark
1	T5758-A7041	Power Socket Kit	1						
2	T4935-92502	POWER OUTLET ASS'Y(12V)	1						
3	T5710-69471	CONNECTION WIRE	1						
4	P5370-82551	BAND, CABLE	1						

----> Old replace New
<---> Interchangeable
* Please place an order assy(*)
<---- New replace Old
<-O-> Interchangeable with another part(s)
<-X-> Not interchangeable

https://tractormanualz.com/

TD2-G593002 FRONT WORKING LAMP GROUP(OPTION)

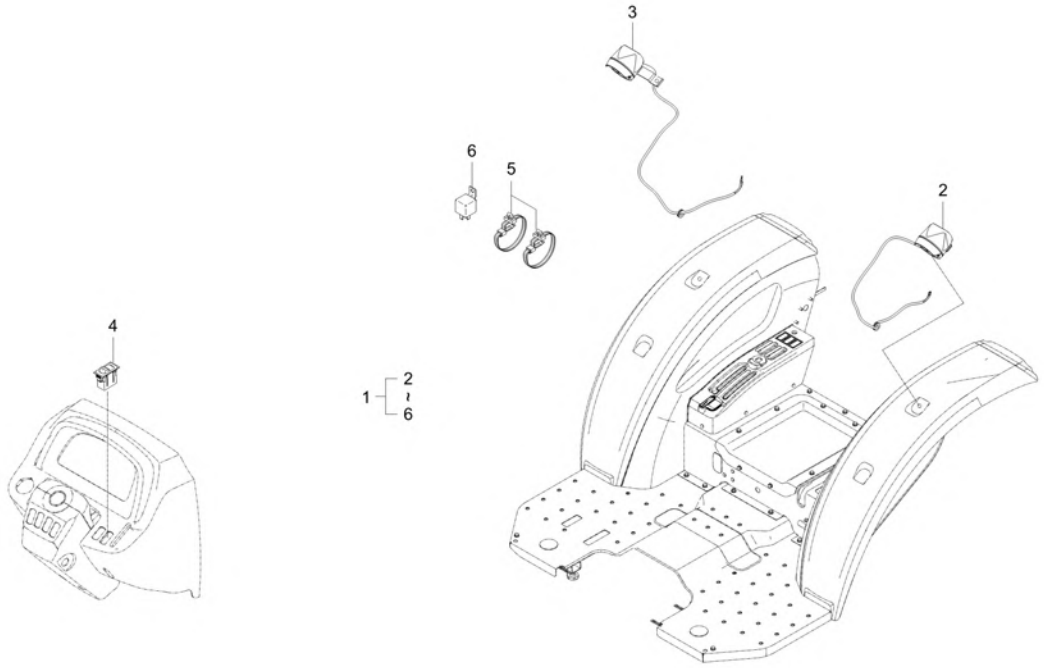

A : DK6010HSE

No.	Part Number	Description	Qty A	Qty B	Qty C	Qty D	Qty E	I.C	Remark
1	T5755-A7012	WORK LAMP	1						
2	T5755-69851	ASS'Y WORKING LAMP LH	1						
3	T5755-69861	ASS'Y WORKING LAMP RH	1						
4	T5535-54221	WORKING LAMP SWITCH, FR	1						
5	P5370-82551	BAND, CABLE	10						
6	T5710-69941	RELAY, 5P v	1						

----> Old replace New <---- New replace Old <-X-> Not interchangeable
<---> Interchangeable <-O-> Interchangeable with another part(s)
* Please place an order assy(*)

https://tractormanualz.com/

TD2-G594001

3 PIN SOCKET GROUP(OPTION)

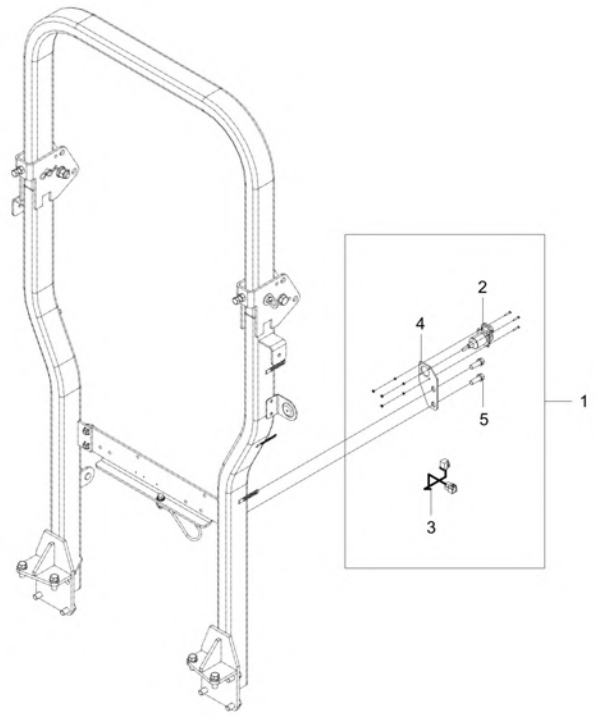

A : DK6010HSE

No.	Part Number	Description	Qty A	Qty B	Qty C	Qty D	Qty E	I.C	Remark
1	T5755-A7052	3 Pin Socket Kit	1						
2	T5310-69031	3 PIN SOCKET ASSY v	1						
3	T5755-69342	WIRE,CONNECTION	1						
4	T5755-77511	BRACKET	1						T3.0
5	01123-51030	BOLT	2						M10*1.5

----> Old replace New
<----> Interchangeable
* Please place an order assy(*)
<---- New replace Old
<-O-> Interchangeable with another part(s)
<-X-> Not interchangeable

https://tractormanualz.com/

TD2-G595001

HST CRUISE GROUP

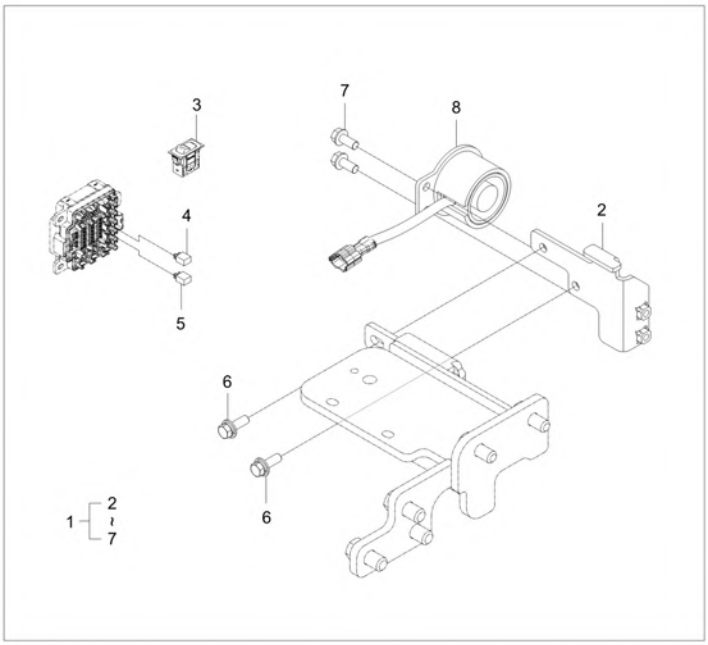

A : DK6010HSE

No.	Part Number	Description	Qty A	Qty B	Qty C	Qty D	Qty E	I.C	Remark
1	TD25-A0001B	HST CRUISE OPTION KIT	1						
2	TD26-0627B	BRACKET,CRUISE v	1						
3	TC25-0058A	ASSY SWITCH, CRUISE	1						
4	T5710-69951	RELAY 4P	1						
5	T5710-69971	RELAY 5P	2						
6	01125-50825	WITH WASHER BOLT	2						M8*1.25
7	01754-50818	FLANGE BOLT	2						
8	T4158-68701	CRUISE MAGNET v	1						

----> Old replace New
<---- New replace Old
<-X-> Not interchangeable
<---> Interchangeable
<-O-> Interchangeable with another part(s)
* Please place an order assy(*)

https://tractormanualz.com/

TD2-G6G2402

LOWER LINK GROUP(OPTION)

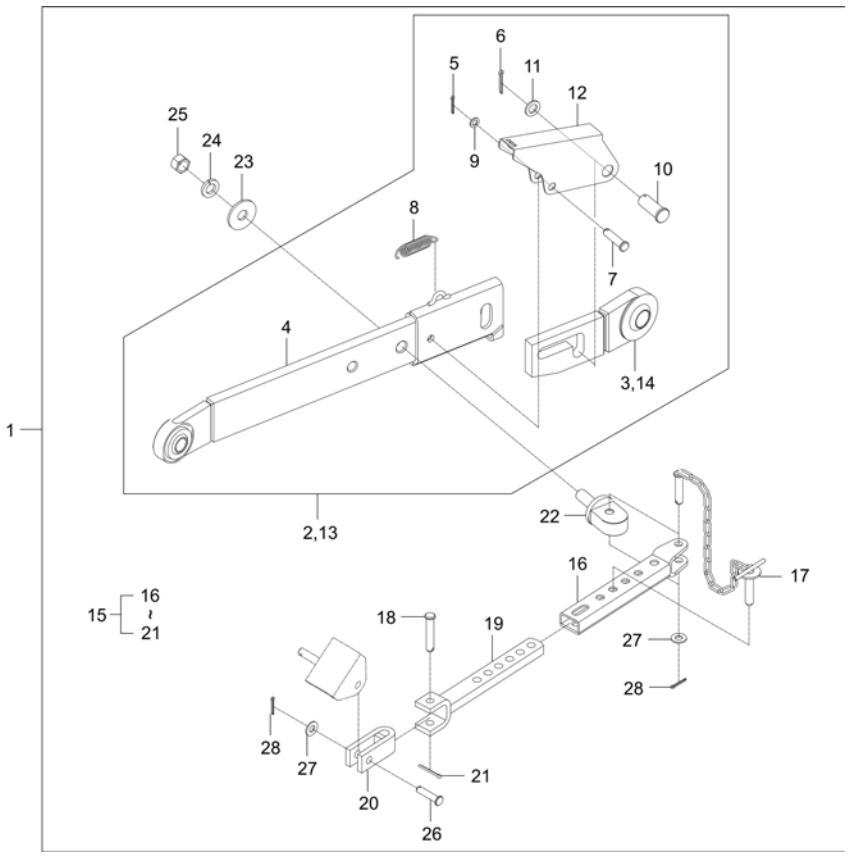

A : DK6010HSE

No.	Part Number	Description	Qty A	Qty B	Qty C	Qty D	Qty E	I.C	Remark
1	TD26-A0045A	LOWER LINK KIT (CAT2)	1						
2	TD26-0866A	ASSY LINK, LOWER-LH CAT2	1						
3	TD26-0868A	HOUSING, LOWER LINK-LH CAT2	1						
4	TD26-0867A	BODY, LOWER LINK-LH	1						
5	05511-50430	CARTER KEY v	1						
6	05511-50445	PIN, SPLIT	1						
7	05122-51250	PIN, JOINT	1						
8	T4850-93051	SPRING	1						DIA2
9	04011-50120	WASHER, PLAIN	1						M12
10	T4680-93061	PIN	1						
11	04011-50200	WASHER, PLAIN	1						
12	T4680-93041	COVER, LWR	1						T2.3
13	TD26-0871A	ASSY LINK, LOWER-RH CAT2	1						
14	TD26-0921A	HOUSING, LOWER LINK-RH CAT2	1						
15	TD26-0810A	ASSY,CHECK LINK	2						
16	TD26-0918A	HOUSING, CHECK LINK	1						
17	TD26-0815A	ASSY,HOOK	1						-
18	05122-51265	PIN,JOINT	1						DIA12*65

----> Old replace New
<---> Interchangeable
* Please place an order assy(*)
<---- New replace Old
<-O-> Interchangeable with another part(s)
<-X-> Not interchangeable

https://tractormanualz.com/

TD2-G6G2402

LOWER LINK GROUP(OPTION)

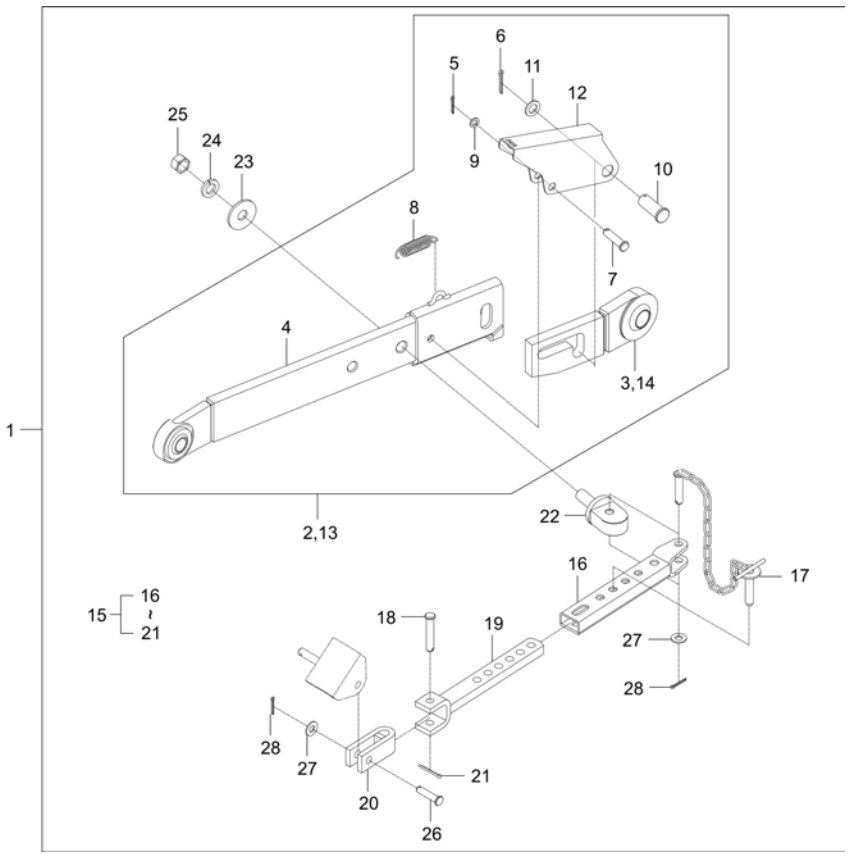

A : DK6010HSE

No.	Part Number	Description	Qty A	Qty B	Qty C	Qty D	Qty E	I.C	Remark
19	T4125-91131	ASSY 2 BRACKET dnr v	1						
20	T2625-91122	ASS'Y, 1 BRACKET	1						
21	05511-50435	PIN, SPLIT	1						DIA4
22	TD26-0814A	PIN,CHECK LINK	2						
23	04015-50160	WASHER	2						
24	04512-50180	WASHER, SPRING	2						M18
25	02176-50180	NUT	2						
26	32353-7189-3	PIN	2						-
27	04013-50120	PLAIN WASHER	4						M12
28	05511-50435	PIN, SPLIT	4						DIA4

----> Old replace New
<----> Interchangeable
* Please place an order assy(*)
<---- New replace Old
<-O-> Interchangeable with another part(s)
<-X-> Not interchangeable

https://tractormanualz.com/

TD2-G6G2701

RPM LINKED GROUP

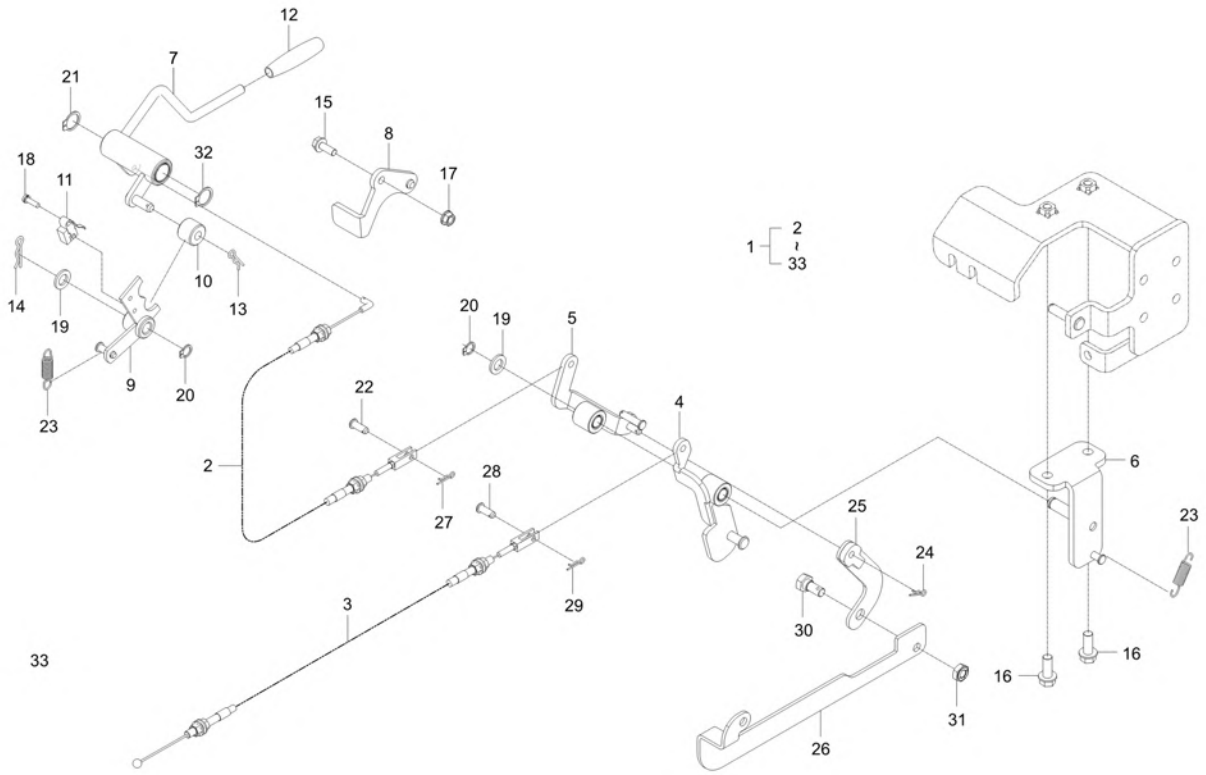

A : DK6010HSE

No.	Part Number	Description	Qty A	Qty B	Qty C	Qty D	Qty E	I.C	Remark
1	TD26-A0032D	RPM LINKED KIT	1						
2	TD26-0234A	CABLE,LINKAGE	1						
3	TD26-0569A	CABLE,LINKAGE-FR	1						
4	TD26-0274B	LEVER,CONNECTING2 v	1						
5	TD26-0265B	LEVER,CONNECTING1 v	1						
6	TD26-0235A	BRACKET,LINK PEDAL	1						
7	TD26-0228A	LEVER-RH RPM	1						
8	TC26-1313A	BRACKET-RPM	1						
9	TC26-0529A	BRACKET, SWITCH	1						
10	T5515-65691	SPACER	1						
11	T4125-69391	SWITCH, MICRO	1						
12	T2350-55922	GRIP	1						
13	05525-50800	PIN, SNAP	1						DIA8
14	05525-51000	PIN, SNAP	1						
15	01754-50616	BOLT, FLANGE v	1						M6*P1.0
16	01754-50820	BOLT, FLANGE	2						M8XP1.25
17	02761-50060	NUT, FLANGE	1						M6XP1.0
18	03024-50414	SCREW	1						

----> Old replace New <---- New replace Old <-X-> Not interchangeable
<---> Interchangeable <-O-> Interchangeable with another part(s)
* Please place an order assy(*)

https://tractormanualz.com/

TD2-G6G2701

RPM LINKED GROUP

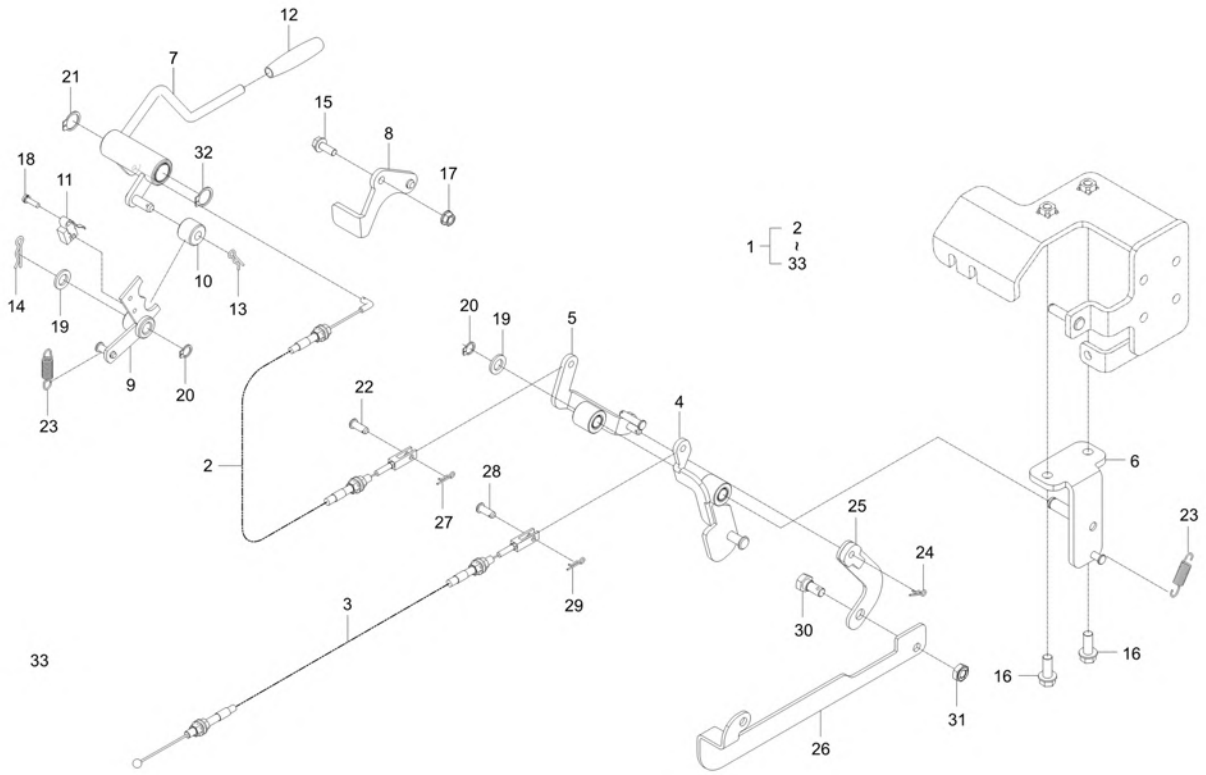

A : DK6010HSE

No.	Part Number	Description	Qty A	Qty B	Qty C	Qty D	Qty E	I.C	Remark
19	04011-50100	PLAIN WASHER	2						M10
20	04612-00100	RING,SNAP	2						
21	04612-00160	SNAP RING v	1						
22	05122-50616	PIN, JOINT	1						DIA6XL16
23	T4157-51211	SPRING, RETURN	2						
24	05525-50600	SNAP PIN	2						DIA6
25	TD26-0797B	PLATE v	1						T3.2
26	TD26-0798A	BRACKET,LINK-LWR	1						T3.2
27	05525-50600	SNAP PIN	1						DIA6
28	05122-50616	PIN, JOINT	1						DIA6XL16
29	05525-50600	SNAP PIN	1						DIA6
30	T2350-50633	BOLT, BONNET	1						
31	41011-5151-4	NUT, LOCK (M8) v	1						
32	04612-00160	SNAP RING v	1						
33	TD26-0952A	Label-RPM	1						T0.05-0.08

----> Old replace New
<---- New replace Old
<-X-> Not interchangeable
<---> Interchangeable
<-O-> Interchangeable with another part(s)
* Please place an order assy(*)

https://tractormanualz.com/

TD2-G6G4101

ARM REST GROUP

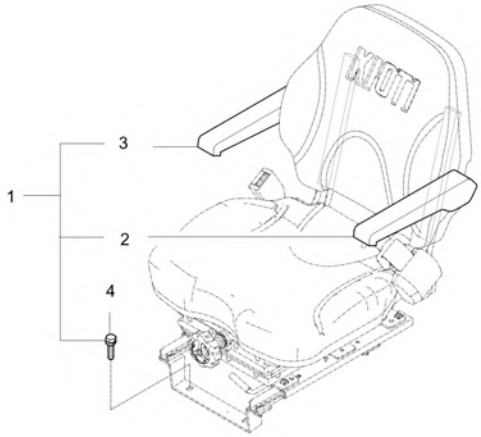

A : DK6010HSE

No.	Part Number	Description	Qty A	Qty B	Qty C	Qty D	Qty E	I.C	Remark
1	TD26-A0043A	ARMREST - option kit dnr v	1						
2	TC26-1263A	ASSY ARMREST LH	1						
3	TC26-1264A	ASSY ARMREST RH	1						
4	TC26-1265A	BOLT, FLANGE	4						

----> Old replace New
<----> Interchangeable
* Please place an order assy(*)
<---- New replace Old
<-O-> Interchangeable with another part(s)
<-X-> Not interchangeable

https://tractormanualz.com/

TD2-G6G0901

AIR CLEANER GROUP

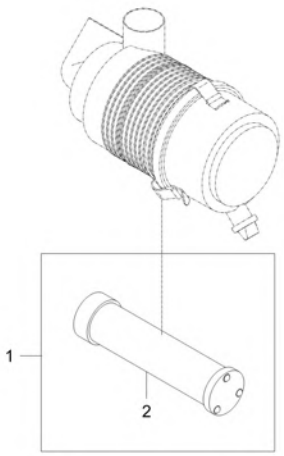

A : DK6010HSE

No.	Part Number	Description	Qty A	Qty B	Qty C	Qty D	Qty E	I.C	Remark
1	TD26-A0049A	INNER FILTER (7") dnr v	1						
2	TD26-1012A	INNER FILTER 7" v	1						

----> Old replace New
<---> Interchangeable
* Please place an order assy(*)
<---- New replace Old
<-O-> Interchangeable with another part(s)
<-X-> Not interchangeable

https://tractormanualz.com/

TD2-G6G0701

SUNSHADE GROUP

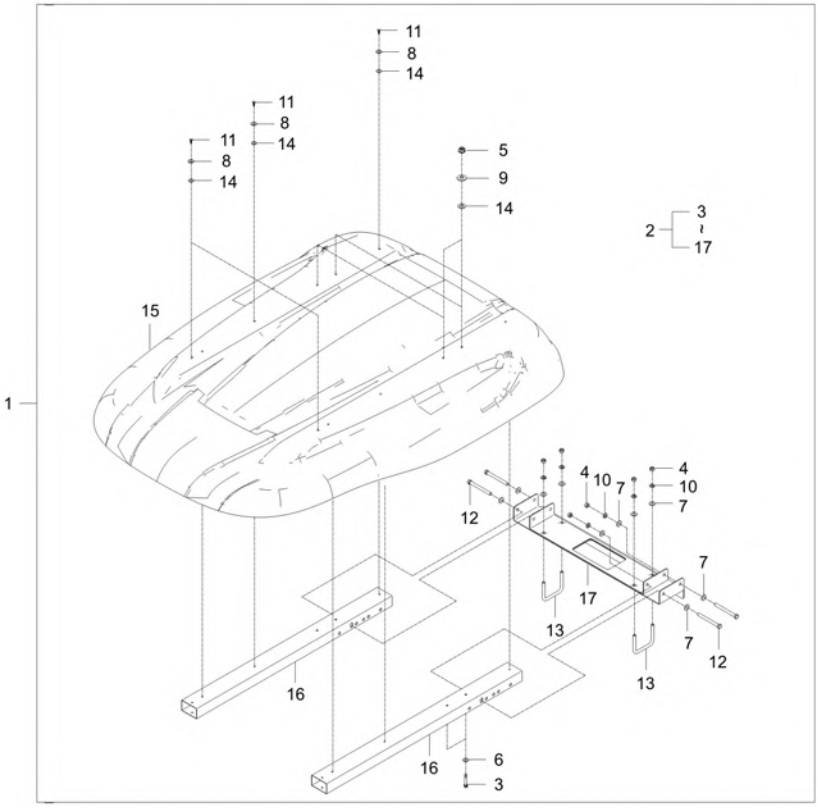

A : DK6010HSE

No.	Part Number	Description	Qty A	Qty B	Qty C	Qty D	Qty E	I.C	Remark
1	T5710-A5083	SUN VISOR KIT ASSY	1						
2	T5710-59603	ASSY SUNSHADE dnr v	1						
3	01023-50665	BOLT, WASHER	4						MEX10*76
4	02014-50100	NUT	8						M10XP1.5
5	02751-50060	NUT, FLANGE	4						M6XP1.0
6	04013-50060	PLAIN WASHER	4						M6
7	04013-50100	PLAIN WASHER	12						M10
8	04015-50050	WASHER, PLAIN	8						M5
9	04015-50060	WASHER, PLAIN	4						M6
10	04512-50100	SPRING WASHER	8						M10
11	38240-1883-1	TAPPING SCREW dnr v	8						M4X16
12	T2185-85101004	BOLT dnr v	4						M10XP1.5
13	T2185-85101005	U BOLT v	2						M10XP1.5
14	T4682-65301	WASHER 2	12						
15	T5710-59612	SUNSHADE	1						T5.0
16	T5710-59622	PIPE	2						75x45xT1.6
17	T5710-59633	ASSY, SUPPORT	1						

----> Old replace New
<----> Interchangeable
* Please place an order assy(*)
<---- New replace Old
<-O-> Interchangeable with another part(s)
<-X-> Not interchangeable

https://tractormanualz.com/

TD2-G6A3001

REAR WEIGHT GROUP

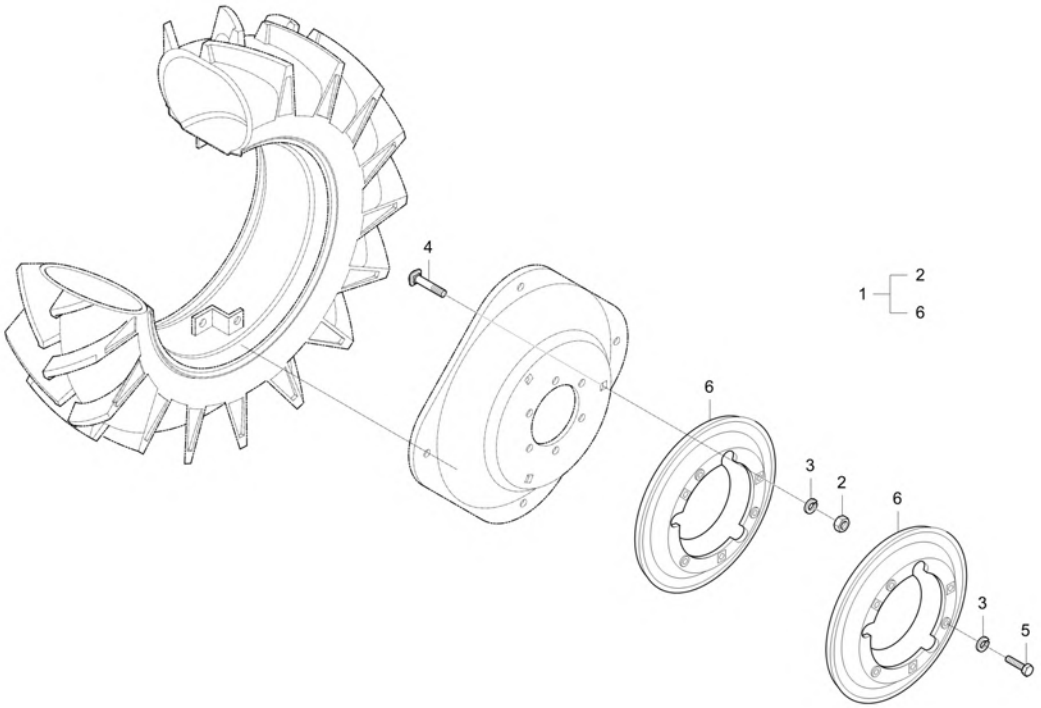

A : DK6010HSE

No.	Part Number	Description	Qty A	Qty B	Qty C	Qty D	Qty E	I.C	Remark
1	T5710-A03000601	WEIGHT ASSY dnr v	1						
1	T5710-A03000602	ASSY WEIGHT-RR	1					<------	
2	02076-50160	NUT	12						
3	04512-50160	WASHER, SPRING	12						M16
4	99415-1502-2	BOLT	6						
5	99415-1503-1	BOLT, WEIGHT	6						
6	T4240-27743	WEIGHT	4						
6	T4240-27744	WEIGHT, WHEEL	4					<------	

----> Old replace New
<----> Interchangeable
* Please place an order assy(*)
<---- New replace Old
<-O-> Interchangeable with another part(s)
<-X-> Not interchangeable

https://tractormanualz.com/

INDEX 1

https://tractormanualz.com/

PART NO.	PAGE	PART NO.	PAGE	PART NO.	PAGE	PART NO.	PAGE	PART NO.	PAGE
01023-50610	66	01123-50840	80	01133-51032	29	01513-50822	68	01754-50616	268
01023-50612	229	01123-50840	191	01133-51032	76	01513-50822	70	01754-50618	159
01023-50616	121	01123-50840	225	01133-51035	103	01513-50835	19	01754-50620	20
01023-50616	165	01123-50845	135	01133-51035	105	01513-50835	23	01754-50620	70
01023-50616	166	01123-50855	236	01133-51050	82	01513-50835	56	01754-50620	155
01023-50618	28	01123-50870	11	01133-51065	82	01513-50835	71	01754-50625	4
01023-50618	60	01123-50870	15	01133-51075	108	01517-51028	24	01754-50625	30
01023-50620	121	01123-50870	51	01133-51080	133	01517-51028	47	01754-50625	61
01023-50645	19	01123-50870	68	01133-51090	11	01517-51440	111	01754-50625	65
01023-50645	56	01123-51020	215	01133-51090	51	01517-51632	116	01754-50625	78
01023-50665	272	01123-51025	132	01133-51090	118	01574-51225	236	01754-50640	22
01023-50680	33	01123-51030	264	01133-51225	139	01574-51230	194	01754-50640	58
01023-50680	35	01125-50816	181	01133-51225	208	01574-51230	246	01754-50812	147
01023-50680	75	01125-50816	202	01133-51225	208	01574-51235	83	01754-50812	151
01025-50612	198	01125-50820	124	01133-51225	236	01574-51235	95	01754-50812	167
01053-50645	142	01125-50820	188	01133-51230	195	01574-51265	81	01754-50816	3
01073-51630	98	01125-50820	198	01133-51230	195	01654-50830	8	01754-50816	5
01073-51630	120	01125-50820	204	01133-51230	208	01654-50830	48	01754-50816	42
01123-50814	213	01125-50820	235	01133-51230	208	01654-50835	2	01754-50816	43
01123-50814	214	01125-50825	265	01133-51240	24	01654-50835	62	01754-50816	93
01123-50816	23	01125-50830	18	01133-51240	47	01754-50610	2	01754-50816	97
01123-50816	71	01125-50850	16	01133-51240	95	01754-50610	16	01754-50816	100
01123-50816	77	01125-50850	69	01133-51245	82	01754-50610	17	01754-50816	106
01123-50816	79	01125-50855	6	01133-51245	83	01754-50610	22	01754-50816	180
01123-50816	119	01125-50855	45	01133-51255	117	01754-50610	39	01754-50816	183
01123-50816	123	01125-50870	16	01133-51260	83	01754-50610	46	01754-50816	184
01123-50816	207	01125-50870	19	01133-51265	95	01754-50610	58	01754-50816	187
01123-50816	208	01125-50870	56	01133-51285	82	01754-50610	62	01754-50816	187
01123-50816	208	01125-50870	69	01135-51025	185	01754-50610	63	01754-50816	188
01123-50818	105	01127-50820	121	01135-51025	241	01754-50610	69	01754-50816	188
01123-50820	88	01127-50820	134	01173-51018	100	01754-50610	118	01754-50816	192
01123-50820	121	01127-50825	152	01173-51230	195	01754-50610	143	01754-50816	194
01123-50820	124	01127-50825	179	01173-51230	246	01754-50610	147	01754-50816	200
01123-50820	142	01127-50825	196	01173-51430	208	01754-50610	153	01754-50816	201
01123-50820	144	01127-50825	196	01173-51435	171	01754-50610	167	01754-50816	203
01123-50820	165	01127-50825	196	01173-51435	194	01754-50612	10	01754-50816	204
01123-50820	206	01127-50825	199	01173-51435	246	01754-50612	50	01754-50816	204
01123-50822	23	01133-51016	194	01173-51445	111	01754-50612	146	01754-50816	207
01123-50822	26	01133-51016	246	01173-51455	171	01754-50614	183	01754-50816	210
01123-50822	29	01133-51020	203	01173-51690	185	01754-50614	184	01754-50816	210
01123-50822	59	01133-51022	222	01173-51690	241	01754-50614	184	01754-50816	213
01123-50822	71	01133-51022	222	01176-51030	136	01754-50614	226	01754-50816	214
01123-50822	76	01133-51022	222	01176-51232	136	01754-50616	6	01754-50816	227
01123-50822	189	01133-51025	91	01176-51235	111	01754-50616	45	01754-50816	230
01123-50822	190	01133-51025	92	01176-51440	107	01754-50616	147	01754-50816	246
01123-50822	223	01133-51025	131	01177-51235	207	01754-50616	147	01754-50816	249
01123-50822	224	01133-51025	133	01177-51240	81	01754-50616	147	01754-50816	253
01123-50825	111	01133-51025	139	01202-50620	60	01754-50616	161	01754-50816	255
01123-50825	124	01133-51025	198	01202-50625	28	01754-50616	161	01754-50818	265
01123-50825	134	01133-51025	244	01202-50625	60	01754-50616	167	01754-50820	15
01123-50830	178	01133-51030	83	01205-50616	233	01754-50616	167	01754-50820	68
01123-50830	212	01133-51030	122	01513-50822	15	01754-50616	167	01754-50820	160
01123-50835	116	01133-51030	131	01513-50822	19	01754-50616	169	01754-50820	196
01123-50835	134	01133-51030	150	01513-50822	20	01754-50616	197	01754-50820	197
01123-50835	142	01133-51030	168	01513-50822	56	01754-50616	232	01754-50820	204

https://tractormanualz.com/

PART NO.	PAGE	PART NO.	PAGE	PART NO.	PAGE	PART NO.	PAGE	PART NO.	PAGE
01754-50820	205	02156-50080	231	02763-50080	178	04013-50100	176	04512-50140	238
01754-50820	207	02156-50080	261	02763-50080	178	04013-50100	186	04512-50140	241
01754-50820	250	02176-50100	138	02763-50080	178	04013-50100	209	04512-50140	246
01754-50820	261	02176-50100	150	02763-50080	181	04013-50100	218	04512-50160	98
01754-50820	268	02176-50100	152	02763-50080	182	04013-50100	218	04512-50160	120
01754-50822	19	02176-50100	168	02763-50080	202	04013-50100	219	04512-50160	171
01754-50822	56	02176-50100	176	02763-50080	210	04013-50100	219	04512-50160	185
01754-50825	15	02176-50100	209	02763-50080	249	04013-50100	227	04512-50160	241
01754-50825	20	02176-50100	209	02763-50080	261	04013-50100	237	04512-50160	273
01754-50825	68	02176-50100	215	02783-50100	29	04013-50100	242	04512-50180	238
01754-50825	70	02176-50100	219	02783-50100	76	04013-50100	272	04512-50180	267
01754-50825	178	02176-50100	219	03016-50616	8	04013-50120	216	04611-00350	231
01754-50830	6	02176-50100	227	03016-50616	48	04013-50120	238	04611-00470	99
01754-50830	7	02176-50100	230	03016-50616	212	04013-50120	267	04611-00470	101
01754-50830	10	02176-50100	236	03024-50414	268	04013-50140	171	04611-00520	84
01754-50830	14	02176-50100	237	03024-50510	17	04015-50050	272	04611-00520	89
01754-50830	19	02176-50120	81	03024-50510	46	04015-50060	210	04611-00520	252
01754-50830	45	02176-50120	95	03054-50214	162	04015-50060	272	04611-00520	254
01754-50830	50	02176-50120	194	03054-50514	146	04015-50080	231	04611-00580	110
01754-50830	56	02176-50120	195	03056-50408	227	04015-50160	238	04611-00580	253
01754-50830	64	02176-50120	236	03056-50510	213	04015-50160	267	04611-00580	255
01754-50830	65	02176-50120	243	04011-50100	189	04512-50020	162	04611-00620	101
01754-50830	147	02176-50120	246	04011-50100	215	04512-50080	151	04611-00800	84
01754-50830	167	02176-50120	246	04011-50100	223	04512-50080	152	04611-00800	113
01754-50835	5	02176-50140	107	04011-50100	269	04512-50080	261	04611-00800	114
01754-50835	14	02176-50140	111	04011-50120	209	04512-50100	136	04611-00920	102
01754-50835	18	02176-50160	185	04011-50120	209	04512-50100	150	04611-00920	114
01754-50835	32	02176-50160	241	04011-50120	266	04512-50100	152	04611-01000	95
01754-50835	34	02176-50180	238	04011-50140	189	04512-50100	157	04611-01000	95
01754-50835	43	02176-50180	267	04011-50140	189	04512-50100	168	04611-01100	109
01754-50835	65	02751-50060	158	04011-50140	189	04512-50100	209	04612-00100	189
01754-50845	77	02751-50060	158	04011-50140	190	04512-50100	209	04612-00100	223
01774-51003	152	02751-50060	272	04011-50140	191	04512-50100	230	04612-00100	269
01774-51016	226	02751-50080	160	04011-50140	223	04512-50100	236	04612-00120	216
01774-51016	226	02751-50080	188	04011-50140	223	04512-50100	237	04612-00140	189
01774-51030	186	02751-50080	210	04011-50140	223	04512-50100	272	04612-00140	189
01774-51030	242	02751-50080	210	04011-50140	224	04512-50120	81	04612-00140	190
01774-51040	90	02751-50080	236	04011-50140	225	04512-50120	82	04612-00140	190
02014-50100	272	02751-50080	250	04011-50160	185	04512-50120	83	04612-00140	191
02054-50020	162	02761-50040	31	04011-50160	189	04512-50120	95	04612-00140	223
02056-50060	198	02761-50040	72	04011-50160	223	04512-50120	111	04612-00140	223
02076-50120	209	02761-50040	163	04011-50160	241	04512-50120	136	04612-00140	224
02076-50120	209	02761-50050	145	04011-50180	190	04512-50120	194	04612-00140	224
02076-50140	117	02761-50060	121	04011-50180	224	04512-50120	209	04612-00140	225
02076-50160	120	02761-50060	184	04011-50200	220	04512-50120	209	04612-00150	228
02076-50160	273	02761-50060	216	04011-50200	220	04512-50120	236	04612-00160	141
02114-50120	186	02761-50060	253	04011-50200	266	04512-50120	243	04612-00160	189
02114-50120	242	02761-50060	255	04012-50080	213	04512-50120	246	04612-00160	223
02156-50080	141	02761-50060	268	04012-50080	220	04512-50140	107	04612-00160	269
02156-50080	151	02763-50080	15	04012-50080	220	04512-50140	111	04612-00160	269
02156-50080	152	02763-50080	19	04013-50060	272	04512-50140	171	04612-00170	231
02156-50080	190	02763-50080	20	04013-50080	190	04512-50140	171	04612-00180	190
02156-50080	191	02763-50080	56	04013-50080	224	04512-50140	185	04612-00180	215
02156-50080	224	02763-50080	68	04013-50080	253	04512-50140	194	04612-00180	224
02156-50080	225	02763-50080	70	04013-50100	152	04512-50140	208	04612-00180	229

https://tractormanualz.com/

PART NO.	PAGE	PART NO.	PAGE	PART NO.	PAGE	PART NO.	PAGE	PART NO.	PAGE
04612-00190	13	04811-00180	100	05012-00818	82	05511-50318	218	06611-15010	111
04612-00190	53	04811-00210	141	05012-00818	103	05511-50318	218	06613-10010	142
04612-00250	99	04811-00240	94	05012-00818	254	05511-50318	219	07715-00805	94
04612-00250	101	04811-00250	141	05012-00820	136	05511-50318	219	07715-01605	88
04612-00250	119	04811-00320	16	05012-01016	79	05511-50335	117	07715-01605	100
04612-00250	218	04811-00320	69	05012-01016	117	05511-50420	138	07715-01605	252
04612-00280	87	04811-00390	95	05012-01018	1	05511-50430	266	07715-01605	254
04612-00300	94	04811-00490	107	05012-01018	41	05511-50435	267	08101-06010	84
04612-00300	99	04811-00490	111	05012-01018	82	05511-50435	267	08101-06205	5
04612-00300	99	04811-05170	125	05012-01018	83	05511-50445	266	08101-06205	43
04612-00300	105	04811-06350	119	05012-01018	95	05515-50800	213	08101-06206	114
04612-00350	86	04811-06420	119	05012-01018	108	05515-50800	217	08101-06208	114
04612-00350	90	04811-06630	6	05012-01020	81	05515-50800	226	08101-06211	95
04612-00350	102	04811-06630	45	05122-50616	226	05515-50800	229	08101-06212	108
04612-00350	103	04811-10120	125	05122-50616	269	05515-51000	203	08101-06305	86
04612-00450	137	04811-10300	8	05122-50616	269	05515-51000	215	08101-06305	99
04612-00500	84	04811-10300	48	05122-50818	255	05515-51000	230	08101-06305	101
04612-50200	220	04811-10380	133	05122-50828	220	05515-51200	238	08101-06305	103
04612-50200	220	04811-10800	122	05122-50828	220	05515-51600	185	08101-06305	103
04613-50060	141	04811-50300	5	05122-51025	203	05515-51600	239	08101-06306	103
04613-50060	141	04811-50300	44	05122-51025	218	05515-51600	241	08101-06306	105
04613-50060	141	04811-50300	140	05122-51025	218	05525-50600	226	08101-06307	84
04613-50060	142	04811-50350	124	05122-51025	230	05525-50600	226	08101-06307	90
04717-01000	81	04811-50500	14	05122-51028	219	05525-50600	227	08101-06307	103
04717-01000	100	04811-50700	107	05122-51028	219	05525-50600	269	08101-06307	113
04717-01000	106	04811-51050	111	05122-51250	266	05525-50600	269	08101-06308	95
04717-01000	114	04814-00160	3	05122-51265	266	05525-50600	269	08101-06309	95
04717-01400	111	04814-00160	42	05411-00412	88	05525-50800	214	08101-06309	116
04717-01600	136	04816-00100	133	05411-00425	88	05525-50800	253	08101-16010	84
04717-02150	114	04816-00150	5	05411-00540	93	05525-50800	255	08111-06003	231
04717-02650	83	04816-00150	7	05411-00625	88	05525-50800	258	08141-06005	100
04717-02650	105	04816-00150	43	05411-00625	100	05525-50800	260	08141-06200	189
04724-00120	28	04816-00150	64	05411-00630	253	05525-50800	268	08141-06200	223
04724-00120	60	04816-00200	133	05411-00630	255	05525-51000	268	08401-51107	114
04724-00180	142	04816-00200	134	05411-00635	84	05624-20408	173	08511-04550	136
04810-00140	137	04816-00200	257	05411-00635	86	05624-20408	173	08511-05050	136
04810-00200	123	04816-00200	259	05411-00635	99	05712-00410	4	08711-30209	91
04810-00200	125	04816-00220	5	05411-00635	101	05712-00410	61	08711-32011	91
04810-00200	131	04816-00220	44	05411-00635	101	05712-00720	8	08822-53017	218
04810-00280	121	04816-00220	134	05411-00635	119	05712-00720	10	08822-53017	252
04810-00320	121	04816-00220	134	05411-00635	215	05712-00720	48	08822-53017	254
04811-00090	124	04817-00200	123	05411-00640	101	05712-00720	50	08822-83327	87
04811-00100	39	04817-00200	125	05411-00840	93	05712-00730	8	08823-23717	86
04811-00100	63	04817-00200	131	05411-00840	218	05712-00730	48	08823-54027	86
04811-00140	93	04817-00200	133	05411-00850	137	06311-55060	83	09318-88130	20
04811-00140	97	04817-00200	257	05411-00850	253	06311-75045	1	09318-88130	66
04811-00140	100	04817-00200	259	05411-00850	255	06311-75045	41	09318-88130	70
04811-00140	252	04817-00220	134	05511-50215	210	06331-45010	81	09318-88130	144
04811-00140	254	04817-00220	134	05511-50218	220	06331-45010	106	09318-88130	181
04811-00150	2	04817-00220	134	05511-50218	220	06331-45010	114	09318-88130	182
04811-00150	62	05012-00408	8	05511-50220	190	06331-45014	111	09318-88130	202
04811-00150	125	05012-00408	48	05511-50220	224	06331-45016	136	09318-88140	18
04811-00160	4	05012-00510	4	05511-50220	253	06350-00607	10	09318-88140	77
04811-00160	43	05012-00510	43	05511-50220	255	06350-00607	50	09318-88180	7
04811-00160	125	05012-00818	80	05511-50318	215	06350-00607	82	09318-88180	15

https://tractormanualz.com/

PART NO.	PAGE	PART NO.	PAGE	PART NO.	PAGE	PART NO.	PAGE	PART NO.	PAGE
09318-88180	17	32210-2758-1	111	41182-5151-1	186	E5620-25161	54	E6500-33062	41
09318-88180	46	32210-2758-1	209	41182-5151-1	242	E5629-24401	28	E6500-33063	1
09318-88180	64	32210-2758-1	230	44366-4723-1	176	E5629-24401	60	E6500-33063	41
09318-88180	68	32350-2898-4	219	52300-3412-1	227	E5800-14261	13	E6500-33201	28
09318-88220	7	32350-2898-4	219	53650-6127-1	187	E5800-14261	53	E6500-33201	60
09318-88220	64	32353-7189-3	267	53650-6127-1	187	E5800-64102	152	E6500-95802	28
09318-88250	23	32353-7189-3TP	238	55571-3238-1	210	E5800-96032	4	E6500-95802	60
09318-88250	71	34150-1426-1	114	57781-5121-1	216	E5800-96032	43	E6500-95803	28
09318-88260	23	34150-2156-1	99	62331-1853-2	88	E5850-32617	7	E6500-95803	60
09318-88260	71	34150-2156-1	101	62331-1853-2	100	E5850-32617	64	E6510-05552	17
09500-35528	80	34150-2939-1	6	66204-3623-1	180	E5850-74151	33	E6510-05552	46
09500-45609	137	34150-2939-1	45	66204-3623-1	200	E5850-74151	35	E6510-14532	17
09502-55210	84	34150-3764-4	171	70515-1633-4	194	E5850-74151	75	E6510-14532	46
09502-55210	99	34150-3764-4	245	70515-1633-4	246	E5900-96022	1	E6510-14671	17
09502-55210	101	34150-3764-4TP	239	82KC-0641	183	E5900-96022	3	E6510-14671	46
09502-55210	252	34354-7158-3TP	239	84612-1445-0	218	E5900-96022	41	E6510-33661	17
09502-55210	254	37150-3447-1	147	99415-1502-2	273	E5900-96022	42	E6510-33661	46
09661-80150	66	37150-3447-1	147	99415-1503-1	273	E6200-04623	150	E6510-91502	13
09661-80260	66	37150-3447-1	167	ASH017-030	126	E6200-04623	168	E6510-91502	53
09661-80300	18	37150-3447-1	167	ASH070-030	129	E6200-91092	257	E6520-34011	28
09661-80300	32	37150-3447-1	170	CE11-0011A	121	E6200-91092	259	E6520-34011	60
09661-80300	34	37150-3447-1	179	E1500-18411	179	E6201-32443	7	E6520-34021	28
09661-80450	18	37150-3447-1	199	E1500-18411	179	E6201-32443	64	E6520-34021	60
09661-80450	32	37150-3447-1	210	E1500-18411	199	E6300-35681	5	E6520-74111	33
09661-80450	34	37155-3447-1	146	E1500-18411	200	E6300-35681	61	E6520-74111	35
14911-4275-1	18	37155-3447-1	152	E5205-24321	10	E6301-13151	13	E6520-74111	75
14911-4275-1	32	37300-2643-2	91	E5205-24321	50	E6301-13151	53	E6700-13111	13
14911-4275-1	34	37300-2644-2	91	E5500-04464	8	E6301-14111	13	E6700-13111	53
14911-4275-1	66	37300-2648-1	91	E5500-04464	48	E6301-14111	53	E6700-13121	13
14911-4275-1	106	37300-2649-1	91	E5500-11302	6	E6301-14311	13	E6700-13121	53
14911-4275-1	201	37300-2661-4	91	E5500-11302	45	E6301-14311	53	E6810-32292	7
15021-1424-1	13	37300-2817-2	91	E5500-13333	13	E6301-14331	13	E6810-32292	64
15021-1424-1	53	37305-2817-1	83	E5500-13333	53	E6301-14331	53	E6820-32451	7
15221-0175-1	3	37800-4387-1	91	E5500-14232	13	E6301-14431	13	E6820-32451	64
15221-0175-1	42	37805-4350-1	111	E5500-14232	53	E6301-14431	53	E6850-73342	15
15221-0337-3	3	37805-4452-1	84	E5500-15553	10	E6301-21202	9	E6850-73342	68
15221-0337-3	42	37805-4452-1	86	E5500-15553	50	E6301-33661	28	E6864-63011	150
15221-0338-3	1	37805-4452-1	101	E5500-33142	5	E6301-33661	60	E7103-63821	25
15221-0338-3	41	37805-4452-1	101	E5500-33142	44	E6301-33812	1	E7103-63821	54
15221-0339-2	1	38240-1883-1	162	E5500-39013	149	E6301-33812	41	E7240-32731	149
15221-0339-2	41	38240-1883-1	272	E5500-63016	168	E6302-21051	9	E7251-64011	152
15221-0349-3	3	38240-2214-1	90	E5500-73013	15	E6302-21051	49	E7251-64012	152
15221-0349-3	42	38240-2647-2	92	E5500-73013	68	E6302-21151	9	E7300-11791	21
15471-9536-1	12	38240-2651-5	92	E5500-73272	15	E6302-21161	9	E7300-11791	40
15471-9536-1	52	38240-2652-3	92	E5500-73272	68	E6303-33661	2	E7300-11791	74
19202-2325-1	8	38245-2142-1	140	E5500-73342	15	E6303-33661	62	E7300-72891	21
19202-2325-1	48	38430-1827-1	183	E5500-73342	68	E6303-33751	2	E7300-72891	40
19202-2325-2	8	38430-1827-1	233	E5500-73343	15	E6303-33751	62	E7300-72891	74
31220-2234-2	90	38430-2175-1	86	E5500-73343	68	E6303-33752	2	E7310-11782	178
31220-2628-1	91	38430-2554-1	86	E5608-99522	36	E6303-33752	62	EF11-0001A	24
31220-2639-2	91	38440-4467-3	107	E5608-99522	38	E6400-13241	13	EF11-0001A	47
31351-3714-2	140	41011-5151-4	178	E5616-74252ED	33	E6400-13241	53	EF15-0004A	9
31355-2949-1	138	41011-5151-4	194	E5616-74252ED	35	E6403-13361	13	EF15-0004A	49
31365-2278-1	252	41011-5151-4	246	E5616-74252ED	75	E6403-13361	53	EF15-0005A	38
31365-2278-1	254	41011-5151-4	269	E5620-25161	25	E6500-33062	1	EF15-0029A	11

https://tractormanualz.com/

PART NO.	PAGE	PART NO.	PAGE	PART NO.	PAGE	PART NO.	PAGE	PART NO.	PAGE
EF15-0029A	51	EH35-0006A	77	F5800-16403	144	F5800-43186	37	F6800-04302	61
EF15-0030A	11	EH35-0007A	77	F5800-17011	26	F5800-43187	37	F6800-04401	4
EF15-0030A	51	EH35-0011A	77	F5800-17011	59	F5800-65561	31	F6800-04401	61
EF15-0038A	12	EH35-0012A	77	F5800-17012	26	F5805-16402	18	F6800-04501	5
EF15-0038A	51	EH35-0015A	65	F5800-17012	59	F5805-16402	32	F6800-04501	43
EF15-0039A	12	EH35-0015B	65	F5800-17502	20	F5805-16402	34	F6800-04711	4
EF15-0039A	51	EH35-0018A	66	F5800-17502	70	F5810-18943	21	F6800-04712	4
EF15-0044A	39	EH39-0001A	30	F5800-17503	20	F5810-18943	57	F6800-04721	4
EF15-0044A	63	EH39-0001A	78	F5800-17503	70	F5830-05511	17	F6800-04731	4
EF17-0007A	143	EH39-0002A	148	F5800-17512	20	F5830-05511	46	F6800-04811	8
EF17-0007A	148	EH39-0002B	148	F5800-17512	70	F5830-16142	203	F6800-04811	48
EF22-0001A	27	F5800-01108	1	F5800-17521	20	F5830-17202	19	F6800-09051	10
EF22-0001A	55	F5800-01116	1	F5800-17521	70	F5830-17202	56	F6800-09051	50
EF23-0002A	21	F5800-01601	2	F5800-17522	20	F5830-17562	20	F6800-10121	11
EF23-0002A	40	F5800-01601	62	F5800-17522	70	F5830-17562	70	F6800-10155	11
EF23-0003A	21	F5800-01602	2	F5800-17531	20	F5830-17801	20	F6800-10155	51
EF23-0003A	57	F5800-01602	62	F5800-17531	70	F5830-17801	70	F6800-10163	11
EF26-0001A	15	F5800-01611	2	F5800-20101	23	F5830-18951	74	F6800-10163	51
EF26-0001A	68	F5800-03044	3	F5800-20101	71	F5830-25101	29	F6800-10261	11
EF44-0023A	43	F5800-03044	42	F5800-21311	49	F5830-25101	76	F6800-10261	12
EH13-0002A	19	F5800-03054	3	F5800-21331	49	F5830-25423	29	F6800-10261	51
EH13-0002A	56	F5800-03311	3	F5800-23111	8	F5830-25423	76	F6800-10261	51
EH15-0001A	65	F5800-03311	42	F5800-23111	48	F5830-72914	15	F6800-10301	11
EH15-0001B	65	F5800-04114	4	F5800-25012	25	F5830-72914	68	F6800-10301	51
EH15-0016A	66	F5800-04114	43	F5800-25012	54	F5831-04612	24	F6800-10311	11
EH16-0003A	33	F5800-04115	4	F5800-25013	25	F5831-04612	47	F6800-10321	11
EH16-0003A	35	F5800-04115	43	F5800-25013	54	F5835-16142	144	F6800-10353	11
EH19-0003A	147	F5800-04116	4	F5800-25112	25	F5850-10102	11	F6800-10353	51
EH19-0004A	148	F5800-04116	43	F5800-25112	54	F5850-10102	51	F6800-10401	11
EH21-0001A	41	F5800-06201	8	F5800-25113	25	F5850-10112	11	F6800-10401	51
EH23-0002B	56	F5800-06201	48	F5800-25113	54	F5850-14501	17	F6800-10411	11
EH23-0003A	43	F5800-11762	19	F5800-26501	143	F5850-14501	46	F6800-10421	11
EH23-0003B	43	F5800-11763	19	F5800-26501	147	F5850-14511	17	F6800-10455	11
EH23-0003C	43	F5800-11821	19	F5800-26501	148	F5850-73341	3	F6800-10455	51
EH25-0001A	65	F5800-11821	56	F5800-26501	167	F5850-73341	42	F6800-10502	12
EH25-0002A	77	F5800-12203	14	F5800-26502	147	F6720-04711	43	F6800-10612	12
EH25-0006A	66	F5800-12252	14	F5800-26502	148	F6720-04712	43	F6800-10612	51
EH25-0006A	77	F5800-12313	22	F5800-26801	143	F6720-04721	43	F6800-11651	21
EH25-0006A	77	F5800-12313	58	F5800-32111	2	F6720-21111	49	F6800-11651	57
EH25-0007A	77	F5800-12351	22	F5800-32111	62	F6800-01311	1	F6800-11951	26
EH25-0009A	77	F5800-12351	58	F5800-33041	28	F6800-01311	67	F6800-11951	59
EH25-0010A	77	F5800-13764	22	F5800-33041	60	F6800-01321	1	F6800-12103001	14
EH28-0005A	73	F5800-13764	58	F5800-33051	60	F6800-01321	67	F6800-12103002	14
EH28-0005B	73	F5800-13773	22	F5800-34206	37	F6800-03451	3	F6800-12103002	66
EH28-0005C	73	F5800-13773	58	F5800-34207	37	F6800-03451	42	F6800-12104	14
EH28-0013A	36	F5800-14001	13	F5800-36412	39	F6800-03501	3	F6800-12371	29
EH28-0013B	36	F5800-14001	53	F5800-36413	39	F6800-03501	42	F6800-12371	76
EH29-0001A	72	F5800-14521	17	F5800-36413	63	F6800-04107	4	F6800-13311	15
EH29-0002A	147	F5800-14521	46	F5800-36414	39	F6800-04108	4	F6800-13311	68
EH29-0002A	167	F5800-14561	17	F5800-36414	63	F6800-04109	4	F6800-14351	13
EH32-0001A	51	F5800-14561	46	F5800-38206	37	F6800-04215	6	F6800-14351	53
EH35-0001A	65	F5800-16012	10	F5800-38207	37	F6800-04215	45	F6800-15111	10
EH35-0002A	65	F5800-16012	50	F5800-41206	37	F6800-04251	6	F6800-15111	50
EH35-0005A	65	F5800-16152	10	F5800-41207	37	F6800-04251	45	F6800-15122	17
EH35-0006A	18	F5800-16152	50	F5800-42501	14	F6800-04302	4	F6800-15122	46

https://tractormanualz.com/

PART NO.	PAGE	PART NO.	PAGE	PART NO.	PAGE	PART NO.	PAGE	PART NO.	PAGE
F6800-16121	18	F6800-23491	8	F6800-73031	16	F6805-53453	65	H017-530	126
F6800-16121	32	F6800-23491	48	F6800-73031	69	F6805-99521	36	H017-531	129
F6800-16121	34	F6800-23501	27	F6800-73051	16	F6805-99521	38	H070-206	129
F6800-16121	77	F6800-23501	55	F6800-73051	69	F6820-72531	33	H070-207	128
F6800-16121	144	F6800-23531	8	F6800-73341	1	F6820-72531	75	H070-208	127
F6800-16131	18	F6800-23531	48	F6800-73341	41	F6860-96041	68	H070-214	130
F6800-16131	32	F6800-23541	8	F6800-90121	1	F6860-96042	15	H070-229	128
F6800-16131	34	F6800-23541	48	F6800-90121	41	F6860-96042	68	H070-500	125
F6800-16131	144	F6800-24111	8	F6800-91812	21	H001-104	128	H070-509	127
F6800-16161	7	F6800-24111	48	F6800-91812	57	H001-215	129	H070-510	129
F6800-16161	64	F6800-25101014	29	F6800-91822	21	H001-219	128	K01-012	126
F6800-16172	7	F6800-25501	26	F6800-91822	57	H001-220	128	K01-012	126
F6800-16172	64	F6800-25501	59	F6800-91851	18	H001-506	128	K01-027	128
F6800-16181	144	F6800-26102	30	F6800-91851	32	H006-101-B	127	K02-006	129
F6800-16181	181	F6800-26102	78	F6800-91851	34	H006-104	129	K02-016	126
F6800-16271	10	F6800-26201	147	F6800-91851	181	H006-106	130	K02-017	130
F6800-16271	50	F6800-26201	167	F6800-91851	182	H006-108	128	K02-061	128
F6800-16411	18	F6800-26303	147	F6800-91851	202	H006-109	127	K02-078	129
F6800-16411	32	F6800-26303	167	F6800-91911	22	H006-200-B	126	K03-006	130
F6800-16411	34	F6800-26401	147	F6800-91911	23	H006-201	126	K03-012	130
F6800-16411	144	F6800-26401	167	F6800-91911	26	H006-202	127	K04-017	129
F6800-16511	10	F6800-26661	29	F6800-91911	26	H006-203-A	127	K04-030	127
F6800-16511	50	F6800-26661	76	F6800-91911	29	H006-204-A	127	K05-011	130
F6800-17101	26	F6800-26671	29	F6800-91911	58	H006-205-B	127	K06-005	130
F6800-17101	59	F6800-26671	76	F6800-91911	59	H006-206-A	127	K06-040	126
F6800-17111	26	F6800-26701	167	F6800-91911	59	H006-208-B	128	K06-040	128
F6800-17111	59	F6800-26751	167	F6800-91911	71	H006-209-B	126	K06-043	127
F6800-17211	19	F6800-29112	174	F6800-91911	76	H006-210-A	129	K06-043	128
F6800-17211	56	F6800-33651	1	F6800-92311	27	H006-211	126	K06-051	130
F6800-17551	20	F6800-33651	41	F6800-92311	55	H006-213	126	K06-057	129
F6800-17551	70	F6800-33671	28	F6800-92411	26	H006-214	128	K07-007	130
F6800-17701	19	F6800-33671	60	F6800-92411	26	H006-215-A	129	K07-018	125
F6800-17701	56	F6800-35631	8	F6800-92411	29	H006-216-A	128	K11-003	130
F6800-20301	20	F6800-35631	48	F6800-92411	59	H006-217-A	129	K11-007	127
F6800-20301	23	F6800-35661	4	F6800-92411	59	H006-221	126	K11-014	126
F6800-20301	70	F6800-35661	61	F6800-92411	76	H006-222	129	K11-014	126
F6800-20301	71	F6800-42511	14	F6800-92421	26	H006-223	128	K11-017	127
F6800-20401	23	F6800-42511	65	F6800-92421	59	H006-242	128	K11-018	129
F6800-20401	71	F6800-53181	14	F6800-92441	26	H006-245	127	K15-003	130
F6800-20501	23	F6800-53181	65	F6800-92441	26	H006-246	127	K16-001	127
F6800-20501	71	F6800-53471	14	F6800-92441	29	H006-247	130	K2400-21161	253
F6800-20703	1	F6800-53471	65	F6800-92441	59	H006-252	130	K2400-21161	255
F6800-20703	41	F6800-53722	14	F6800-92441	59	H006-254	126	K5400-14572	103
F6800-21111	9	F6800-53722	65	F6800-92441	76	H006-500	127	K5400-14582	103
F6800-21311	9	F6800-53732	14	F6800-92451	22	H006-505	128	K5400-14592	104
F6800-21331	9	F6800-53732	65	F6800-92451	58	H006-510	130	K9100-50241	194
F6800-21351	9	F6800-53742	14	F6800-92452	22	H006-511	130	K9100-50241	246
F6800-21351	49	F6800-53742	65	F6800-92452	58	H009-2281	128	M301260	124
F6800-22011	9	F6800-60011	166	F6800-92771	12	H017-104-A	129	P5370-32511	190
F6800-22011	49	F6800-64421	15	F6800-92771	51	H017-216	126	P5370-82551	151
F6800-22111	9	F6800-64421	68	F6800-94111	22	H017-233-A	127	P5370-82551	181
F6800-22141	9	F6800-65511	31	F6800-94111	58	H017-234-A	129	P5370-82551	181
F6800-22141	49	F6800-65511	72	F6805-53001	14	H017-235-A	129	P5370-82551	182
F6800-23481	8	F6800-72921	15	F6805-53452	14	H017-507-A	126	P5370-82551	202
F6800-23481	48	F6800-72921	68	F6805-53453	14	H017-508-B	126	P5370-82551	262

https://tractormanualz.com/

PART NO.	PAGE	PART NO.	PAGE	PART NO.	PAGE	PART NO.	PAGE	PART NO.	PAGE
P5370-82551	263	T2350-50633	269	T2610-23851	90	T2630-85411	239	T4157-39051	257
T2165-39281	142	T2350-55881	190	T2610-23882	90	T2630-85421	239	T4157-50271	205
T2181-25442	194	T2350-55881	224	T2610-25241	86	T2630-85431	239	T4157-51211	216
T2181-25442	246	T2350-55922	216	T2610-37453	137	T2630-85441	239	T4157-51211	269
T2185-44764	215	T2350-55922	268	T2610-37482	133	T2630-95052	210	T4158-26331	92
T2185-51462	183	T2350-55961	218	T2610-39202	142	T2660-55771	220	T4158-26341	92
T2185-66721	214	T2350-95472	211	T2610-39222	142	T2660-55771	220	T4158-26351	92
T2185-70482	249	T2360-37552	197	T2610-39233	142	T4025-68301	146	T4158-68701	265
T2185-70491	179	T2440-16351	231	T2610-39252	142	T4025-68301	159	T4180-34041	124
T2185-70491	179	T2440-44251	252	T2610-39252	189	T4025-68301	164	T4182-53191	174
T2185-70491	196	T2440-44251	254	T2610-39252	223	T4115-26101	91	T4240-14081	82
T2185-70491	199	T2445-29781	194	T2610-39572	141	T4115-26102	91	T4240-14081	83
T2185-70491	199	T2445-29781	246	T2610-39572	214	T4115-26511	92	T4240-27743	273
T2185-71221	214	T2555-06004	102	T2610-39572	258	T4115-26521	92	T4240-27744	273
T2185-71241	231	T2555-06005	99	T2610-39572	260	T4115-31331BB	118	T4240-28533	244
T2185-71241	258	T2555-06005	101	T2610-39882	138	T4115-31341BB	118	T4257-67511	256
T2185-71241	260	T2555-06006	105	T2610-50271	207	T4115-43871	91	T4260-50100	231
T2185-82551	144	T2555-06007	84	T2610-50271	236	T4115-63603	117	T4260-62552	3
T2185-82551	151	T2555-06007	101	T2610-52461	174	T4115-63613	117	T4260-62552	42
T2185-82551	161	T2555-06205	84	T2610-55751	219	T4125-13561	179	T4340-27122	95
T2185-82551	181	T2555-06205	85	T2610-55751	219	T4125-13561	199	T4340-27131	98
T2185-82551	182	T2555-06205	86	T2610-55802	220	T4125-14261	105	T4340-43681	116
T2185-82551	202	T2555-06205	99	T2610-55802	220	T4125-27202	95	T4520-26161	190
T2185-82561	161	T2555-06205	252	T2611-26693	174	T4125-31051	125	T4520-26161	224
T2185-85101004	272	T2555-06205	254	T2611-54825	237	T4125-31063	125	T4520-37372	125
T2185-85101005	272	T2555-06206	84	T2615-25661	102	T4125-31123	222	T4520-38151	121
T2185-97153	185	T2555-06207	84	T2615-25671	102	T4125-31123	222	T4520-41821	159
T2185-97153	241	T2555-06304	252	T2615-25681	102	T4125-33171	190	T4520-43011	113
T2198-31052	159	T2555-06304	254	T2615-25711	102	T4125-33171	224	T4520-43011	114
T2198-68811	162	T2555-23331	93	T2615-25721	102	T4125-33241	190	T4520-43021	113
T2198-69471	153	T2555-23331	100	T2615-25742	102	T4125-33241	224	T4520-43021	114
T2198-70471	188	T2555-23331	252	T2615-25771	102	T4125-37062	125	T4520-43031	113
T2198-82571	66	T2555-23331	255	T2615-25782	102	T4125-37072	125	T4520-43031	114
T2198-82571	77	T2555-26641	93	T2615-25791	102	T4125-37082	125	T4520-43041	113
T2198-82571	161	T2555-28461	94	T2615-55112	174	T4125-38021	131	T4520-43041	114
T2230-85242	185	T2555-52141	174	T2625-91122	267	T4125-38123	131	T4520-43051	113
T2230-85242	241	T2555-52262	174	T2630-42161	106	T4125-41602	107	T4520-43051	114
T2241-50311	174	T2555-52282	174	T2630-42291	110	T4125-42321	108	T4520-43061	113
T2305-26641	141	T2555-52353	174	T2630-42452	110	T4125-42322	108	T4520-43061	114
T2305-26641	218	T2555-55462	243	T2630-42462	110	T4125-43103	108	T4520-43071	108
T2305-26641	221	T2555-60991	253	T2630-42472	110	T4125-43242	113	T4520-43081	108
T2305-26641	221	T2555-60991	255	T2630-42482	110	T4125-53121	248	T4520-43091	108
T2350-13612	201	T2555-69023	159	T2630-42492	110	T4125-69391	268	T4520-43141	108
T2350-46612	261	T2555-69571	169	T2630-42501	110	T4125-70261	234	T4520-43151	108
T2350-50421	179	T2555-75951	165	T2630-42511	110	T4125-91131	267	T4520-43171	108
T2350-50421	196	T2610-14541	87	T2630-42752	110	T4128-33228	110	T4520-43191	125
T2350-50421	196	T2610-14541	252	T2630-43012	108	T4144-75952	165	T4520-43652	116
T2350-50421	196	T2610-14541	254	T2630-43022	108	T4144-85721	145	T4520-43941	117
T2350-50421	199	T2610-21321	238	T2630-43032	108	T4145-53191	253	T4520-44081	91
T2350-50431	179	T2610-22821	86	T2630-43042	109	T4145-53191	256	T4520-44091	91
T2350-50431	196	T2610-23621	86	T2630-43052	109	T4145-55791	220	T4520-44101	91
T2350-50431	196	T2610-23681	87	T2630-43111	108	T4145-55791	220	T4520-63625	117
T2350-50431	196	T2610-23823	90	T2630-43121	108	T4145-60582	204	T4520-83301	210
T2350-50431	196	T2610-23831	90	T2630-44581	119	T4157-24281	253	T4601-65031	253
T2350-50431	199	T2610-23841	90	T2630-44602	119	T4157-24281	255	T4601-65031	255

https://tractormanualz.com/

PART NO.	PAGE	PART NO.	PAGE	PART NO.	PAGE	PART NO.	PAGE	PART NO.	PAGE
T4620-21481	82	T4710-22242	105	T5250-68771	161	T5525-89452	171	T5710-50252	198
T4620-21481	83	T4720-90081	214	T5250-68771	181	T5525-89461	171	T5710-50263	198
T4620-21591	110	T4810-21283	88	T5250-68771	202	T5525-89471	171	T5710-50264	198
T4620-25383	103	T4810-24541	86	T5270-11011	178	T5525-89481	171	T5710-50411	199
T4620-25442	103	T4810-25771	86	T5270-52011	172	T5528-58451	245	T5710-50412	199
T4620-25452	103	T4810-45761	124	T5270-55241	236	T5535-50451	180	T5710-50423	199
T4620-37092	123	T4810-46751	121	T5270-55241	236	T5535-50451	200	T5710-50424	179
T4620-37092	131	T4810-46762	121	T5270-A15050201	240	T5535-54221	263	T5710-50424	199
T4620-37092	133	T4810-47131	124	T5275-95341	240	T5535-69281	162	T5710-50451	201
T4620-37092	134	T4810-47131	134	T5310-69031	264	T5535-69931	160	T5710-50461	179
T4620-37092	257	T4810-66721	214	T5315-81251	181	T5535-69951	153	T5710-50461	199
T4620-37092	259	T4810-67832	181	T5315-81251	182	T5535-81212	216	T5710-50481	179
T4620-43541	114	T4810-67832	182	T5315-81251	202	T5565-88201	176	T5710-50481	199
T4620-44592	99	T4810-67832	202	T5410-26161	92	T5620-50291	230	T5710-50492	179
T4620-44592	119	T4818-43451	111	T5410-26171	92	T5638-85721	145	T5710-50492	199
T4620-50701	183	T4818-71221	229	T5410-26181	92	T5710-23112	88	T5710-50502	179
T4620-55762	218	T4835-17241	242	T5410-48081	185	T5710-25411	103	T5710-50502	199
T4620-55762	218	T4835-46591	134	T5410-48081	242	T5710-30091	133	T5710-50831	181
T4620-55821	219	T4835-51232	258	T5410-70211	209	T5710-30091	257	T5710-50831	182
T4620-55821	219	T4835-51232	260	T5410-71122	245	T5710-30091	259	T5710-50831	202
T4620-60371	212	T4835-66532	213	T5515-14751	80	T5710-32101	141	T5710-50841	181
T4620-69272	261	T4835-66532	214	T5515-65691	268	T5710-32511	141	T5710-51014	183
T4620-69331	170	T4837-51242	175	T5520-23651	102	T5710-32601	141	T5710-51014OE	183
T4620-85451	239	T4837-77774	154	T5520-31533	111	T5710-35101	133	T5710-51053	184
T4620-85451	245	T4850-93051	266	T5520-31542	112	T5710-35111	133	T5710-51063	184
T4620-85471TP	239	T4930-43601	114	T5520-31562	112	T5710-35121	133	T5710-51072	183
T4625-52281	174	T4930-45681	132	T5520-31572	112	T5710-35131	257	T5710-51081	183
T4625-52351	174	T4930-45781	132	T5520-32041	113	T5710-35131	259	T5710-51092	183
T4625-55431	198	T4930-47071	133	T5520-32051	113	T5710-35142	257	T5710-51102	184
T4625-55431	210	T4930-47071	257	T5520-32513	114	T5710-35142	259	T5710-51114	203
T4625-55431	233	T4930-47071	259	T5520-32523	115	T5710-36601	134	T5710-51162	183
T4625-55441	179	T4930-47091	132	T5520-32532	115	T5710-37132	137	T5710-51181	183
T4625-55441	199	T4930-64301	232	T5520-33051	116	T5710-37181	137	T5710-51181	184
T4630-65281	188	T4930-66741	227	T5520-33081	116	T5710-37212	137	T5710-51181	184
T4665-50382	184	T4930-66751	226	T5520-36571	112	T5710-37222	137	T5710-51181	184
T4668-83301	176	T4930-70493	188	T5520-36572	112	T5710-37231	137	T5710-51181	184
T4668-83301	227	T4931-45781	132	T5520-36591	106	T5710-37241	137	T5710-51191	203
T4680-93041	266	T4935-45781	132	T5520-75171	154	T5710-37281	137	T5710-51251	207
T4680-93061	266	T4935-46941	136	T5520-75191	177	T5710-37302	135	T5710-51611	220
T4681-44611	119	T4935-52011	173	T5520-80391	209	T5710-37441	136	T5710-51841	208
T4682-43132	108	T4935-92502	262	T5520-80391	209	T5710-37511	137	T5710-51871	176
T4682-43261	111	T4938-52351	174	T5520-80391	230	T5710-37521	137	T5710-51872	176
T4682-43372	111	T4938-53551	174	T5520-90071	257	T5710-37571	141	T5710-51881	187
T4682-43571	154	T5210-37311	136	T5520-90071	259	T5710-37631	245	T5710-51892	187
T4682-43731	113	T5210-55742	218	T5521-33011	116	T5710-38031	121	T5710-51892	187
T4682-43731	116	T5210-65291	216	T5521-33011	116	T5710-38131	138	T5710-51951	187
T4682-65301	272	T5210-69401	154	T5525-50435	179	T5710-39031	133	T5710-52022	187
T4682-65311	219	T5210-69612	151	T5525-50435	199	T5710-39031	259	T5710-52036	188
T4682-65311	219	T5245-11021	178	T5525-50721	201	T5710-39202	141	T5710-52037	188
T4686-41351	236	T5245-50231	180	T5525-69313	167	T5710-39701	141	T5710-52042	208
T4686-43622	116	T5245-50231	200	T5525-83972	253	T5710-50031	188	T5710-52042	208
T4686-51951	187	T5245-55461	243	T5525-87621	172	T5710-50061	204	T5710-52051	209
T4686-72161010	200	T5245-55462	243	T5525-89411	171	T5710-50072	204	T5710-52052	209
T4686-85341	240	T5248-52101	248	T5525-89421	171	T5710-50221	198	T5710-52615	210
T4710-11081	178	T5248-52102	248	T5525-89451	171	T5710-50231	198	T5710-52615OE	210

https://tractormanualz.com/

PART NO.	PAGE	PART NO.	PAGE	PART NO.	PAGE	PART NO.	PAGE	PART NO.	PAGE
T5710-52624	210	T5710-81223	232	T5715-43312	112	T5718-51621	221	TC26-1690A	194
T5710-52624OE	210	T5710-81232	232	T5715-43332	112	T5718-51631	221	TC26-1690A	246
T5710-52653	210	T5710-A03000601	273	T5715-44511	99	T5718-52037	188	TC26-1717B	185
T5710-52664	210	T5710-A03000602	273	T5715-44531	99	T5718-54601	245	TC26-1717B	241
T5710-52811	217	T5710-A5031	171	T5715-44561	100	T5750-81091	227	TC26-1718A	192
T5710-53412	213	T5710-A5032	171	T5715-44571	100	T5755-28211	94	TC26-1718B	192
T5710-53434	213	T5710-A5083	272	T5715-44582	100	T5755-59041	215	TC26-1718C	192
T5710-53471	213	T5715-21331	88	T5715-44611	99	T5755-59072	215	TC26-1769A	192
T5710-54023	214	T5715-21342	88	T5715-44631	99	T5755-69342	264	TC26-1769B	192
T5710-54032	257	T5715-21361	88	T5715-45201	117	T5755-69851	263	TC26-1772A	192
T5710-54032	259	T5715-21371	88	T5715-45201012	117	T5755-69861	263	TC26-1773A	192
T5710-54051	214	T5715-21372	88	T5715-51131	183	T5755-77511	264	TC26-1774A	192
T5710-54051	258	T5715-21382	89	T5715-51141	183	T5755-A7012	263	TC26-1774B	192
T5710-54051	260	T5715-21383	89	T5715-51151	183	T5755-A7052	264	TC26-1776A	192
T5710-54621	245	T5715-23152	88	T5715-51871	187	T5758-68351	159	TC26-1778A	192
T5710-54662	238	T5715-23163	88	T5715-53212	212	T5758-69251	166	TC26-1780A	192
T5710-54711	238	T5715-23371	87	T5715-53471	213	T5758-69341	144	TC26-1781A	192
T5710-55274	185	T5715-25231	101	T5715-53511	229	T5758-69341	156	TC26-1782A	251
T5710-55274	241	T5715-25263	103	T5715-53531	229	T5758-69471	166	TC26-1783A	251
T5710-55281	261	T5715-25281	103	T5715-53551	229	T5758-69491	166	TC26-1784A	192
T5710-55311	186	T5715-25333	103	T5715-53571	213	T5758-A7021	261	TC26-1786A	192
T5710-55311	242	T5715-25461	97	T5715-53611	215	T5758-A7041	262	TC26-1787A	192
T5710-55461	174	T5715-25901	103	T5715-54811	239	T5758-A7072	144	TC26-1788A	192
T5710-58041	178	T5715-26561	92	T5715-55011	194	T5815-24142	252	TC26-1789A	193
T5710-59071	214	T5715-26571	92	T5715-55011	246	T5815-24142	254	TC26-1790A	193
T5710-59081	258	T5715-26591	92	T5715-55021	194	T5815-24232	252	TC26-1791A	251
T5710-59081	260	T5715-26631	93	T5715-55021	246	T5815-24232	254	TC26-1791A	251
T5710-59603	272	T5715-26672	95	T5715-55202	241	T5855-50542	184	TC26-1792A	193
T5710-59612	272	T5715-26713	95	T5715-55236	185	T5980-81291	18	TC26-1834A	193
T5710-59622	272	T5715-26723	95	T5715-55236	241	T8105-75770	116	TC26-A0113A	251
T5710-59633	272	T5715-27112	95	T5715-55237	185	TB25-0009A	157	TC26-A0114A	251
T5710-69014	162	T5715-27131	96	T5715-55237	241	TB25-0010A	157	TD22-0022B	86
T5710-69015	162	T5715-28133	96	T5715-55257	185	TC22-0094A	102	TD22-0023B	86
T5710-69016	162	T5715-28134	96	T5715-55257	241	TC24-0164A	137	TD22-0024B	86
T5710-69017	162	T5715-28135	96	T5715-55258	185	TC24-0221A	224	TD22-0025B	86
T5710-69212	163	T5715-28136	96	T5715-55258	241	TC24-0238A	123	TD22-0026B	87
T5710-69252	164	T5715-28143	96	T5715-55411	172	TC24-0238A	131	TD22-0027B	82
T5710-69391	170	T5715-28144	96	T5715-55431	172	TC24-0238A	133	TD22-0028A	93
T5710-69471	262	T5715-28145	96	T5715-80603	230	TC24-0238A	134	TD22-0030B	102
T5710-69513	169	T5715-28146	96	T5715-80691	231	TC24-0238A	257	TD22-0031A	102
T5710-69523	169	T5715-28222	94	T5715-A5011	176	TC24-0238A	259	TD22-0033A	102
T5710-69941	263	T5715-28243	94	T5715-A6042	257	TC25-0058A	265	TD22-0035B	82
T5710-69951	265	T5715-28253	94	T5715-A6043	257	TC26-0388A	174	TD22-0036B	101
T5710-69961	156	T5715-28272	94	T5715-A6044	257	TC26-0527A	226	TD22-0037B	101
T5710-69971	265	T5715-28321	96	T5715-A6045	257	TC26-0527B	226	TD22-0038B	84
T5710-80651	230	T5715-32313	142	T5715-A6052	259	TC26-0528A	226	TD22-0039A	84
T5710-80841	231	T5715-32401	141	T5715-A6053	259	TC26-0529A	268	TD22-0041B	85
T5710-80852	231	T5715-37116	136	T5715-A6054	259	TC26-0535A	228	TD22-0042B	84
T5710-80861	231	T5715-37117	136	T5715-A6055	259	TC26-1263A	270	TD22-0043A	94
T5710-80871	231	T5715-37562	141	T5716-50431	180	TC26-1264A	270	TD22-0044A	99
T5710-81012	227	T5715-38802	139	T5716-50431	200	TC26-1265A	270	TD22-0045A	99
T5710-81031	227	T5715-39401	142	T5716-50441	180	TC26-1298A	238	TD22-0046A	99
T5710-81051	227	T5715-42142	106	T5716-50441	200	TC26-1313A	268	TD22-0047A	88
T5710-81213	233	T5715-43211	113	T5718-51032	184	TC26-1689A	194	TD22-0048B	88
T5710-81214	233	T5715-43221	113	T5718-51042	184	TC26-1689A	246	TD22-0049B	88

https://tractormanualz.com/

PART NO.	PAGE	PART NO.	PAGE	PART NO.	PAGE	PART NO.	PAGE	PART NO.	PAGE
TD22-0050B	84	TD24-0069A	134	TD26-0170B	196	TD26-0393D	187	TD26-1012A	271
TD22-0052B	84	TD24-0073A	123	TD26-0173A	196	TD26-0393DOE	187	TD26-1021A	230
TD22-0053A	83	TD24-0073A	124	TD26-0184A	197	TD26-0393E	187	TD26-1024A	219
TD22-0053B	83	TD24-0073A	131	TD26-0210B	190	TD26-0407A	188	TD26-1024A	219
TD22-0057B	90	TD24-0074A	123	TD26-0210B	224	TD26-0410B	230	TD26-1089A	182
TD22-0058D	83	TD24-0075A	124	TD26-0224A	189	TD26-0410C	230	TD26-1089A	202
TD22-0059C	81	TD24-0082A	132	TD26-0224A	223	TD26-0413A	216	TD26-1095A	187
TD22-0060C	82	TD24-0084A	132	TD26-0228A	268	TD26-0512A	181	TD26-1103A	255
TD22-0072C	252	TD24-0103B	125	TD26-0230A	189	TD26-0512A	182	TD26-1105A	255
TD22-0072C	254	TD24-0103C	125	TD26-0230A	223	TD26-0512A	202	TD26-1107A	255
TD22-0073A	252	TD24-0105A	132	TD26-0234A	268	TD26-0512B	182	TD26-1144A	183
TD22-0073A	254	TD24-0109A	132	TD26-0235A	268	TD26-0512B	202	TD26-1188A	179
TD22-0074C	252	TD24-0111A	132	TD26-0239A	189	TD26-0539A	215	TD26-A0032D	268
TD22-0074C	254	TD24-0113A	132	TD26-0239A	223	TD26-0568A	244	TD26-A0043A	270
TD22-0075A	105	TD24-0115B	124	TD26-0243A	190	TD26-0569A	268	TD26-A0045A	266
TD22-0076A	252	TD24-0120A	132	TD26-0243A	224	TD26-0589A	231	TD26-A0049A	271
TD22-0076A	254	TD24-0125A	137	TD26-0246A	204	TD26-0589B	231	TE15-0112A	147
TD22-0081B	253	TD24-0151A	123	TD26-0249C	236	TD26-0592A	231	TF14-0031A	132
TD22-0081B	255	TD24-0151B	123	TD26-0251B	236	TD26-0597A	235	TF14-0122A	214
TD22-0082A	253	TD24-0157B	121	TD26-0255A	236	TD26-0610A	226	TF14-0123A	257
TD22-0082A	255	TD24-0159A	133	TD26-0255B	236	TD26-0619B	179	TF14-0123A	259
TD22-0083B	105	TD24-0159A	257	TD26-0257A	236	TD26-0619B	200	TG14-0137A	136
TD22-0084A	102	TD24-0159A	259	TD26-0257B	236	TD26-0624C	208	TG16-1530A	174
TD22-0090B	79	TD24-0181A	122	TD26-0260A	189	TD26-0627B	265	TG16-1530B	174
TD22-0091A	100	TD24-0188A	123	TD26-0260A	223	TD26-0640A	230	TG16-1540A	175
TD22-0105A	89	TD24-0188B	123	TD26-0265B	268	TD26-0643A	234	TG35-0114A	177
TD22-0106A	89	TD24-0198A	123	TD26-0269A	189	TD26-0727A	181	U3215-77501	180
TD22-0119A	79	TD24-0202A	134	TD26-0269A	223	TD26-0728A	181		
TD22-0128A	103	TD24-0253A	134	TD26-0274B	268	TD26-0728A	182		
TD22-A0023B	252	TD24-0254A	125	TD26-0277A	190	TD26-0728A	202		
TD22-A0044A	254	TD25-0031A	151	TD26-0277A	224	TD26-0797B	269		
TD23-0005A	110	TD25-0033B	146	TD26-0279B	207	TD26-0798A	269		
TD23-0006A	110	TD25-0033C	146	TD26-0287A	190	TD26-0810A	266		
TD23-0007A	110	TD25-0035B	146	TD26-0287A	224	TD26-0814A	267		
TD23-0010A	107	TD25-0035C	146	TD26-0291A	189	TD26-0815A	266		
TD23-0032A	106	TD25-0055A	158	TD26-0291A	223	TD26-0833A	207		
TD23-0046A	115	TD25-0056A	158	TD26-0300A	205	TD26-0866A	266		
TD23-0046B	115	TD25-0090A	143	TD26-0300B	205	TD26-0867A	266		
TD23-0047A	115	TD25-0092A	163	TD26-0300C	205	TD26-0868A	266		
TD23-0047B	115	TD25-0092B	163	TD26-0303A	222	TD26-0871A	266		
TD24-0001A	141	TD25-0114B	155	TD26-0305A	207	TD26-0903A	194		
TD24-0002A	142	TD25-0140A	166	TD26-0309A	183	TD26-0916A	185		
TD24-0008A	137	TD25-A0001B	265	TD26-0313A	222	TD26-0916A	241		
TD24-0036A	121	TD26-0007A	250	TD26-0323A	208	TD26-0916B	185		
TD24-0038A	121	TD26-0008A	180	TD26-0325B	208	TD26-0916B	241		
TD24-0045B	124	TD26-0008A	200	TD26-0339B	218	TD26-0918A	266		
TD24-0046A	131	TD26-0148A	247	TD26-0341B	218	TD26-0921A	266		
TD24-0047A	131	TD26-0151A	194	TD26-0345A	220	TD26-0926A	226		
TD24-0048A	131	TD26-0151A	247	TD26-0347B	218	TD26-0930A	206		
TD24-0049A	123	TD26-0153A	178	TD26-0358A	212	TD26-0936A	173		
TD24-0050B	123	TD26-0154A	178	TD26-0388A	253	TD26-0936B	173		
TD24-0051A	123	TD26-0163C	196	TD26-0391A	253	TD26-0950A	172		
TD24-0052A	123	TD26-0163D	196	TD26-0393A	187	TD26-0952A	269		
TD24-0056A	124	TD26-0164A	196	TD26-0393B	187	TD26-1009A	175		
TD24-0067A	134	TD26-0168B	196	TD26-0393C	187	TD26-1009B	175		

https://tractormanualz.com/

INDEX 2

https://tractormanualz.com/

PARTS GROUP	GROUP NO.	PAGE	PARTS GROUP	GROUP NO.	PAGE
<CHASSIS>			RANGE SHIFT LEVER GROUP	TD2-G641502	214
3 POINT LINKAGE GROUP	TD2-G685001	240	REAR VIEW MIRROR GROUP	TD2-G6F4503	176
7 PIN SOCKET GROUP	TD2-G6F6001	250	ROPS BAR GROUP	TD2-G631010	185
ACCELERATOR GROUP	TD2-G648001	226	ROPS BAR GROUP	TD2-G631002	241
ACCELERATOR LEVER GROUP	TC2-G648106	227	SEAT GROUP	TD2-G661010	192
ACCELERATOR PEDAL GROUP	TC2-G648201	228	SMV BRACKET GROUP	TD2-G6F0502	249
ACCESSORIES_SERVICE PARTS GROUP	TD2-G6F9004	177	STEERING COLUMN COVER GROUP	TD2-G654001	232
AIR CLEANER GROUP	TD2-G611009	178	STEERING COLUMN GROUP	TD2-G653004	231
AIR CLEANER SUPPORT GROUP	TD2-G611211	196	STEERING WHEEL GROUP	TD2-G651002	243
AUXLIARY STEP GROUP	TD2-G663003	235	STEP MAT GROUP	TD2-G662004	234
BATTERY FIXING GROUP	TD2-G617003	205	STEP SEAT FRAME GROUP	TD2-G633007	187
BONNET GROUP	TD2-G615505	183	TOP LINK GROUP	TD2-G683002	245
BONNET LATCH GROUP	TD2-G616103	204	VIBRATIONPROOF RUBBER GROUP	TD2-G624001	209
BONNET SUPPORT GROUP	TD2-G616006	203	**<ELECTRICAL>**		
BRAKE PEDAL GROUP	TD2-G646503	218	7 PIN SOCKET GROUP(SAE)	TD2-G525506	160
BRAKE ROD GROUP	TD2-G646601	219	ALTERNATOR GROUP	TD2-G514001	152
CABIN SUPPORT GROUP	TD2-G623003	208	BATTERY GROUP	TD2-G513504	151
CHECK LINK GROUP	TD2-G682002	238	DISPLAY CONTROL GROUP	TD2-G533006	162
COOLANT RESERVIOR GROUP	TD2-G612701	201	ENGINE ELECTRICAL GROUP(1)	TD2-G511002	147
DIFFERENTIAL PEDAL GROUP	TD2-G645501	217	ENGINE ELECTRICAL GROUP(1)	TD2-G511001	167
DRAWBAR GROUP	TD2-G692004	194	ENGINE ELECTRICAL GROUP(2)	TD2-G511502	143
DRAWBAR GROUP	TD2-G692001	246	ENGINE ELECTRICAL GROUP(2)	TD2-G511503	148
ECU BRACKET GROUP	TD2-G617205	206	ENGINE ELECTRICAL GROUP(3)	TD2-G512001	149
EXTERNAL POSITION ADJUSTING LEVER	TD2-G648501	229	FUEL HEATER GROUP	TD2-G516002	156
FRONT AXLE FRAME GROUP	TD2-G621005	207	FUEL HEATER OPTION GROUP	TD2-G516001	144
FRONT WEIGHT GROUP(OPTION)	TD2-G6A2002	171	FUEL SENDER GROUP	TD2-G533503	163
FRONT WHEEL DRIVE LEVER GROUP	TD2-G644503	215	GLOW CONTROL GROUP	TD2-G514501	153
FUEL COOLER GROUP	TD2-G614502	181	HEAD LAMP WIRE HARNESS GROUP	TD2-G532501	170
FUEL COOLER GROUP	TD2-G614506	182	HEAD LIGHT GROUP	TD2-G521001	169
FUEL COOLER GROUP	TD2-G614504	202	HORN GROUP	TD2-G534502	165
FUEL TANK GROUP	TD2-G671003	236	LIGHT CONTROL GROUP	TD2-G525003	159
HST CONTROL GROUP	TD2-G647602	189	PTO CONTROL GROUP	TD2-G534002	164
HST CONTROL GROUP	TD2-G647603	223	REAR COMBINATION LAMP GROUP	TD2-G522502	158
HST PEDAL GROUP	TD2-G647501	222	REFLECTOR GROUP	TD2-G524002	145
INSTRUMENT COVER GROUP	TD2-G655001	233	SAFETY STARTER GROUP	TD2-G515503	155
INSTRUMENT PANEL FRAME GROUP	TD2-G652002	230	START CONTROL GROUP	TD2-G515003	154
LABEL(BONNET COVER) GROUP	TD2-G6D1043	172	STARTER MOTOR GROUP	TD2-G513003	150
LABEL(FRAME) GROUP	TD2-G6D4002	248	STARTER MOTOR GROUP	TD2-G513001	168
LABEL(MAIN/ETC) GROUP	TD2-G6D3015	174	TIER4 CONTROL GROUP	TD2-G535001	166
LABEL(MFG CERTIFICATE) GROUP	TD2-G6D2009	173	TURN SIGNAL LAMP GROUP	TD2-G522002	157
LEVER GUIDE(ROPS) GROUP	TD2-G637003	210	WIRE HARNESS FIXING GROUP	TD2-G531503	161
LIFT ROD GROUP	TD2-G684003	239	WIRE HARNESS GROUP	TD2-G531011	146
LOWER LINK GROUP	TD2-G681004	244	**<ENGINE>**		
MUFFLER GROUP	TD2-G612002	198	AFTER TREATMENT GROUP	EF2-G129001	29
PARKING BRAKE LEVER GROUP	TD2-G645202	216	CAMSHAFT GROUP	EF2-G109001	10
RADIATOR GROUP	TD2-G612512	179	COOLING FAN GROUP	EF2-G164001	33
RADIATOR GROUP(ROPS)	TD2-G612506	199	COOLING FAN GROUP	TD2-G112007	35
RANGE SHIFT LEVER GROUP	TD2-G640504	212	CRANK SHAFT FULLEY GROUP	EF2-G127004	27
RANGE SHIFT LEVER GROUP	TD2-G641002	213	CRANK SHAFT GROUP	EF2-G106001	8

https://tractormanualz.com/

PARTS GROUP	GROUP NO.	PAGE	PARTS GROUP	GROUP NO.	PAGE
CYLINDER BLOCK GROUP	EF2-G101001	1	HST ASSY GROUP	TD2-G422001	125
CYLINDER HEAD COVER GROUP	EF2-G116001	17	HST HYDRAULIC LINE GROUP	TD2-G423001	131
CYLINDER HEAD GROUP	EF2-G103001	3	HYDRAULIC BLOCK GROUP	TD2-G443005	134
ECU GROUP	EF2-G130001	30	HYDRAULIC CYLINDER GROUP	TD2-G463003	136
EGR COOLER GROUP	EF2-G122003	23	HYDRAULIC CYLINDER GROUP	TD2-G463501	137
EGR GROUP	EF2-G119001	20	HYDRAULIC CYLINDER GROUP	TD2-G464001	138
ELECTRICAL PARTS GROUP	EF2-G133505	31	HYDRAULIC SYSTEM GROUP(1)	TD2-G465502	141
ENGINE LABEL GROUP	TD2-G118009	36	LIFT CONTROL VALVE(MEC) GROUP	TD2-G461001	135
EPA EEC LABEL GROUP	F5805-G310A	37	MODULATE VALVE GROUP	TD2-G421009	124
EXHAUST MANIFOLD GROUP	EF2-G121003	22	OIL INLET TUBE GROUP	TD2-G465001	140
FLYWHEEL GROUP	EF2-G124003	25	POWER STEERING UNIT GROUP	TD2-G431003	132
FLYWHEEL HOUSING GROUP	EF2-G123001	24	SUCTION LINE GROUP	TD2-G411003	121
FUEL EQUIPMENT GROUP	EF2-G111501	14	TOP LINK DEVICE GROUP	TD2-G464502	139
FUEL FILTER GROUP	EF2-G117003	18	**<OPTION>**		
FUEL FILTER GROUP	EF2-G156003	32	3 PIN SOCKET GROUP(OPTION)	TD2-G594001	264
FUEL FILTER GROUP	EF3-G156001	34	AIR CLEANER GROUP	TD2-G6G0901	271
GEAR CASE COVER GROUP	EF2-G104501	6	ARM REST GROUP	TD2-G6G4101	270
GEAR CASE GROUP	EF2-G104001	4	ARM REST GROUP(OPTION)	TC2-G6G4101	251
IDLE GEAR GROUP	EF2-G110001	11	FRONT WORKING LAMP GROUP(OPTION)	TD2-G593002	263
INTAKE HOSE GROUP	EF2-G120003	21	HST CRUISE GROUP	TD2-G595001	265
INTAKE MANIFOLD GROUP	EF2-G118001	19	HYDRAULIC BLOCK GROUP	TD2-G446003	257
INTAKE PIPE GROUP	TD2-G113002	40	HYDRAULIC BLOCK GROUP	TD2-G446004	259
LABEL GROUP	F6805-G320A	38	LOWER LINK GROUP(OPTION)	TD2-G6G2402	266
OIL FILTER GROUP	EF2-G105001	7	MID PTO GROUP(OPTION)	TD2-G2M2001	252
OIL GAUGE GROUP	EF2-G102501	39	MID PTO GROUP(OPTION)	TD2-G2M2002	254
OIL PAN GROUP	EF2-G102001	2	POWER SOCKET GROUP	TD2-G527002	262
PISTON_CONNECTING ROD GROUP	EF2-G107001	9	REAR WEIGHT GROUP	TD2-G6A3001	273
ROCKER ARM_VALVE GROUP	EF2-G111001	13	REAR WORKING LAMP GROUP	TD2-G523002	261
TURBO CHARGER GROUP	EF2-G127003	26	RPM LINKED GROUP	TD2-G6G2701	268
TURBO PIPE GROUP	EF2-G128001	28	SUNSHADE GROUP	TD2-G6G0701	272
WATER FLANGE GROUP	EF2-G114003	15	**<STAGE5>**		
WATER PUMP GROUP	EF2-G115001	16	AFTERTREATMENT GROUP	TD2-G115001	76
<FRONT AXLE>			CAMSHAFT GROUP	EH2-G123001	50
BEVEL GEAR CASE GROUP	TD2-G314001	111	COOLING FAN GROUP	TD2-G112001	75
BEVEL GEAR SHAFT GROUP	TD2-G315001	113	CRANK SHAFT FULLEY GROUP	EH2-G127003	55
BEVEL PINION SHAFT GROUP	TD2-G313002	110	CRANK SHAFT GROUP	EH2-G121001	48
FRONT AXLE BRACKET GROUP	TD2-G332002	107	CYLINDER BLOCK GROUP	EH2-G111001	41
FRONT AXLE CASE GROUP	TD2-G316001	114	CYLINDER HEAD COVER GROUP	EH2-G116001	46
FRONT AXLE GROUP	TD2-G317001	116	CYLINDER HEAD GROUP	EH2-G113001	42
FRONT AXLE SUPPORT GROUP	TD2-G311002	106	ECU GROUP	TD2-G119001	78
FRONT DIFF SYSTEM GROUP	TD2-G312001	108	EGR COOLER GROUP	EH2-G172001	71
FRONT WHEEL GROUP	TD2-G341004	120	EGR GROUP	EH2-G171001	70
PROPELLER SHAFT GROUP	TD2-G331001	119	EXHAUST MANIFOLD GROUP	EH2-G133001	58
STEERING CYLINDER COVER GROUP	TD2-G322001	118	FLYWHEEL GROUP	EH2-G126002	54
STEERING CYLINDER GROUP	TD2-G321001	117	FLYWHEEL HOUSING GROUP	EH2-G117001	47
<HYDRAULIC>			FUEL EQUIPMENT GROUP	EH2-G151001	65
COOLING SYSTEM GROUP	TD2-G413003	123	FUEL FILTER GROUP	TD2-G117001	77
EXTERNAL DRAW VALVE GROUP	TD2-G442007	133	GEAR CASE COVER GROUP	EH2-G115001	45
GEAR PUMP GROUP	TD2-G412003	122	GEAR CASE GROUP	EH2-G114001	43

https://tractormanualz.com/

PARTS GROUP	GROUP NO.	PAGE	PARTS GROUP	GROUP NO.	PAGE
GLOW PLUG GROUP	EH2-G191001	72			
IDLE GEAR GROUP	EH2-G124001	51			
INTAKE HOSE GROUP	EH2-G132003	57			
INTAKE MANIFOLD GROUP	EH2-G131001	56			
INTAKE PIPE GROUP	TD2-G113001	74			
MANUFACTURING LABEL GROUP	TD2-G118001	73			
OIL FILTER GROUP	EH2-G144001	64			
OIL GAUGE GROUP	EH2-G143001	63			
OIL JET GROUP	EH2-G161001	67			
OIL PAN GROUP	EH2-G142001	62			
OIL PUMP GROUP	EH2-G141001	61			
PISTON_CONNECTING ROD GROUP	EH2-G122001	49			
ROCKER ARM_VALVE GROUP	EH2-G125001	53			
TURBO GROUP	EH2-G134001	59			
TURBO PIPE GROUP	EH2-G135001	60			
WATER FLANGE GROUP	EH2-G162003	68			
WATER PUMP GROUP	EH2-G163001	69			
<TRANSMISSION>					
BRAKE GROUP	TD2-G293002	94			
CLUTCH GROUP	TD2-G211003	79			
CLUTCH HOUSING GROUP	TD2-G222003	81			
DRIVE SHAFT GROUP	TD2-G232003	84			
FRONT COVER GORUP	TD2-G221002	80			
FRONT WHEEL DRIVE SHAFT GROUP	TD2-G2B1003	99			
MID CASE GROUP	TD2-G223003	82			
MID PTO SHAFT GROUP	TD2-G2F1001	105			
PTO CLUTCH GROUP	TD2-G2C3002	102			
PTO INPUT SHAFT GROUP	TD2-G2C1002	101			
PTO SHAFT GROUP	TD2-G2C4006	103			
PTO SHIFT FORK GROUP	TD2-G2C5002	97			
RANGE SHIFT FORK GROUP	TD2-G272003	88			
RANGE SHIFT SHAFT GROUP	TD2-G271003	86			
REAR AXLE GROUP	TD2-G2A1001	95			
REAR DIFF LOCK GROUP	TD2-G283002	93			
REAR DIFFERENTIAL GROUP	TD2-G282001	91			
REAR WHEEL GROUP	TD2-G2G1002	98			
SPIRAL BEVEL PINION SHAFT GROUP	TD2-G281003	90			
TRANSMISSION CASE GROUP	TD2-G224003	83			

https://tractormanualz.com/