TABLE OF CONTENTS

[ENGINE]

TD1300-010	CYLINDER BLOCK GROUP	1
TD1300F-1-015	OIL PAN GROUP	3
TD1300-020	CYLINDER HEAD COVER GROUP	4
TD1300-030	GEAR CASE GROUP	6
TD1400-050	MAIN BEARING CASE GROUP	8
TD1400B-1-060	MANIFOLD GROUP	10
TD1400B-1-063	AIR CLEANER GROUP	11
TD1300B-066	MUFFLER GROUP	12
TD1300-070	VALVE ROCKER ARM GROUP	14
TD1300B-080	CYLINDER HEAD COVER GROUP	16
TD1300-090	CAMSHAFT GROUP	18
TD1300-100	PISTON & CRANKSHAFT GROUP	20
TD1300F-110	FLYWHEEL GROUP	23
TD1400-120	NOZZLE HOLDER GROUP	25
TD1300-130	FUEL CAMSHAFT GROUP	27
TD1300-135	GOVERNOR GROUP	29
TD1300B-143	ENGINE STOP LEVER GROUP	30
TD1400-150	SPEED CONTROL LEVER GROUP	32
TD1300B-160	WATER HOSE GROUP	34
TD1300B-170	WATER PUMP GROUP	36
TD1400-190	ALTERNATOR GROUP	38
TD1400-220	RADIATOR GROUP	40

[TRANSMISSION]

T220F-T010A	BRAKE CASE GROUP	42
L2203-T030A	CLUTCH GROUP	44
T260F-T210A	PROPER SHAFT GROUP	46
LK2552-T235A	FRONT SHIFT LEVER & MISSION CASE GROUP	48
T260F-T350A	CLUTCH HOUSING GROUP	49
T220F-T360A	TRANSMISSION CASE GROUP	52
L2203-T370A	MAIN SHAFT GROUP	53
T260F-T380A	COUNTER SHAFT GROUP	55
T260F-T390A	DIFF SYSTEM GROUP	57
T220F-T400A	DIFF LOCK PEDAL GROUP	59
T260F-T410A	PTO SHAFT GROUP	61

https://tractormanualz.com/

T260F-T420A SHIFT SYSTEM 1 GROUP 64
LK2554-T430A MAIN SHIFT LEVER GROUP 66
L2203-T440A SHIFT SYSTEM 2 GROUP 68
T220F-T450A REAR AXLE CASE GROUP 70
L2203-T460A REAR AXLE GROUP 71

[FRONT AXLE]

L2203-T170A FRONT AXLE GROUP 73
LK2552-T175A FRONT AXLE GROUP 75
L2203-T180A FRONT AXLE SUPPORT GROUP 77
L2203-T190A DIFF GEAR CASE GROUP 79
L2601-T240A FRONT AXLE FRAME GROUP 82

[HYDRAULIC]

LK2552-T215A FRONT STEERING SYSTEM GROUP 84
T260F-T220A FRONT STEERING SYSTEM GROUP 86
LK2552-T225A FRONT STEERING SYSTEM GROUP 88
T260F-T280A HYDRAULIC TUBE GROUP 90
LK2554-T295A HYDRAULIC CYLINDER GROUP 92
T260F-T300A CONTROL VALVE GROUP 94
L2601-T320A HYDRAULIC PUMP GROUP 96
T260F-T325A HYDRAULIC RELIEF GROUP 98
L2203-T330A LIFT ARM GROUP 100
T260F-T470A STEERING SYSTEM GROUP 102

[ELECTRICAL]

LK2554-T120A BATTERY GROUP 104
LK2554-T130A FENDER LIGHT GROUP 105
LK2554-T140A ELECTRICITY SYSTEM 1GROUP 106
LK2554-T150A ELECTRICITY SYSTEM 2 GROUP 108
LK2554-T160A WIRING GROUP 110

[CHASSIS]

T260F-T020A BRAKE PEDAL GROUP 112
L2203-T040A CLUTCH PEDAL GROUP 114
L2203-T050A BONNET 1 GROUP 115
T220F-T060A BONNET 2 GROUP 118

https://tractormanualz.com/

L2203-T070A BONNET 3 GROUP 120
LK2554-T080A FENDER GROUP 122
T260F-T090A STEP GROUP 124
LK2552-T110A LABEL GROUP 126
LK2554-T110A LABEL GROUP 128
L2203-T200A FRONT AXLE FRAME GROUP 130
L2203-T230A FRONT DRIVE SHIFT GROUP 132
L2203-T240A FUEL TANK GROUP 134
L2203-T250A OIL FILTER GROUP 137
L2203-T260A HAND SPEED GOVERNOR GROUP 139
T220F-T310A POSITION CONTROL LEVER GROUP 141
L2203-T340A THREE POINT LINKAGE GROUP 142

[OPTION]

L2203-T480A FRONT WHEEL GROUP 145
L2203-T490A REAR WHEEL GROUP 146
L2203-T500A WEIGHT GROUP 147

INDEX1 148
INDEX2 157

https://tractormanualz.com/

TD1300-010

CYLINDER BLOCK GROUP

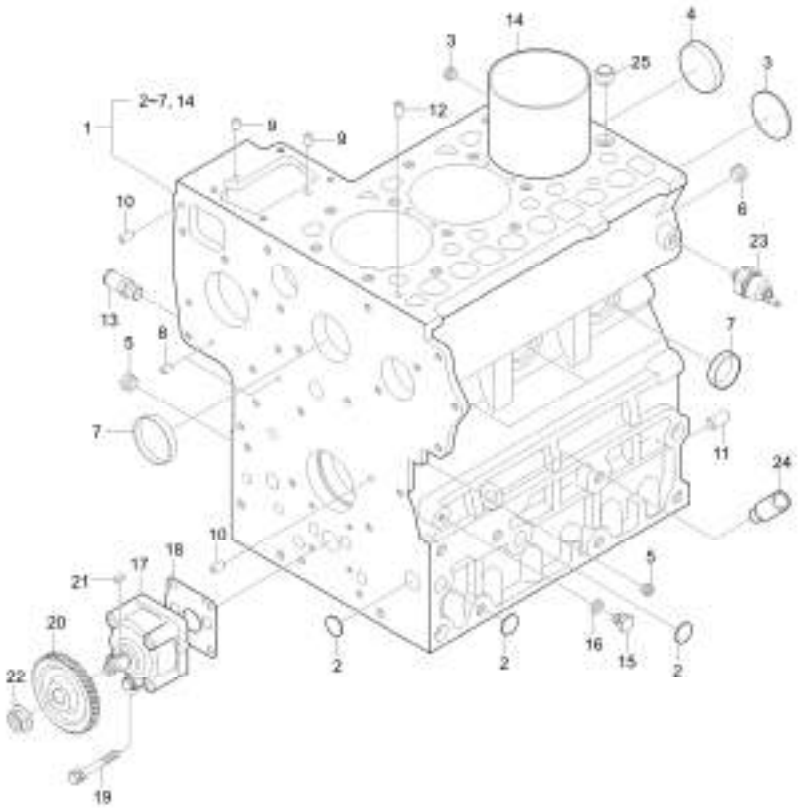

A : LK2554

No.	Part Number	Description	Qty A	Qty B	Qty C	Qty D	Qty E	I.C	Remark
1	E5500-A1002	A'SSY CYLINDER BLOCK	1						
1	E5500-A1006	CYLINDER BLOCK ASSEMBLY	1					<------	
2	06311-75015	PLUG	3						T1.6*18*18
3	15221-0338-3	CAP	5						-
4	15221-0339-2	CAP	2						-
5	06311-75045	PLUG	1						DIA45
6	15521-9602-2	PLUG dnr v	5						-
6	E5900-96021	OBS USE E5900-96022	5					<----->	N
7	15521-9603-2	PLUG	2						DIA12*12,PT 1/4
7	E5900-96031	PLUG	2					<----->	
8	05012-00408	STRAIGHT PIN	2						DIA4XL8
9	05012-00609	PIN, PARALLEL	2						
10	05012-00612	PIN, PARALLEL	2						
11	05012-01018	PIN, STRAIGHT	1						DIA10XL18
12	15221-3365-1	PIN, TUBE dnr v	1						DIA8*18
13	E5500-73342	HOSE, WATER RETURN v	1						
14	E5500-02313	LINER, CYLINDER v	3						
15	15221-3361-1	PLUG	1						HEX14,M8*1 .25

----> Old replace New <---- New replace Old <-X-> Not interchangeable
<---> Interchangeable <-O-> Interchangeable with another part(s)
* Please place an order assy(*)

https://tractormanualz.com/

TD1300-010

CYLINDER BLOCK GROUP

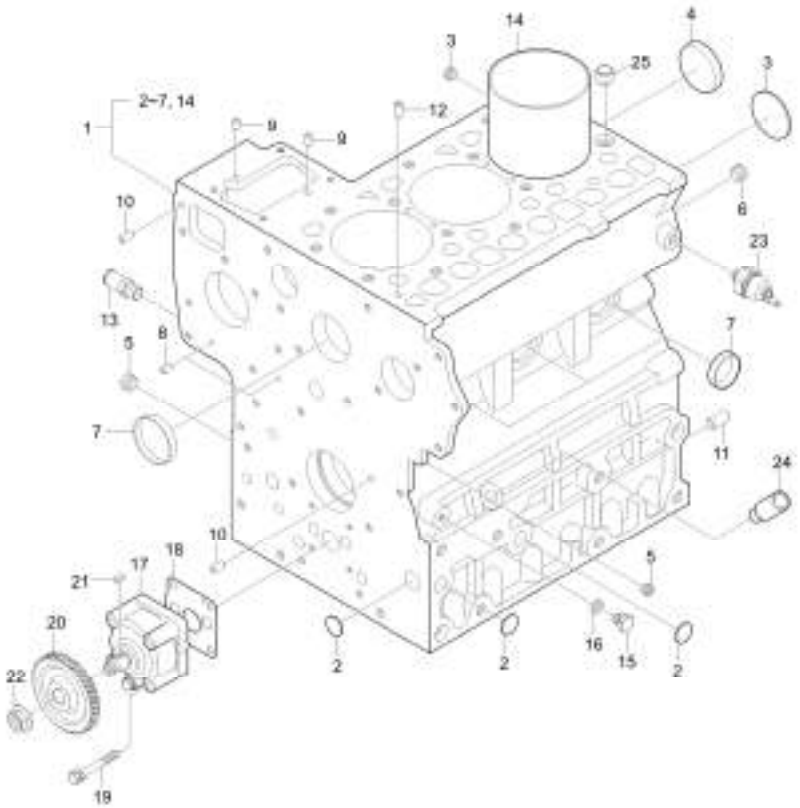

A : LK2554

No.	Part Number	Description	Qty A	Qty B	Qty C	Qty D	Qty E	I.C	Remark
16	15021-3366-1	GASKET	1						T1.5
17	E6200-35012	ASSY, OIL PUMP v	1						
18	E5500-35152	GASKET, OIL PUMP v	1						T0.3*60*60
18	E5500-35153	GASKET,OIL PUMP v	1					<------	T0.3*60*60
18	E5500-35154	GASKET, OIL PUMP	1					<------	T0.3*60*60
19	01023-50650	BOLT, WASHER	4						M6*PI.0
20	19202-3566-1	GEAR, OIL PUMP DRIVE	1						220G
21	05712-00410	KEY	1						W4XL10
22	E6300-35681	FLANGE NUT	1						M12*P1.25
23	E5500-39013	SWITCH, OIL	1						
24	E6300-35692	GUIDE, OIL GAUGE	1						
25	E6301-33812	PIN, PIPE	1						-

----> Old replace New
<---> Interchangeable
* Please place an order assy(*)
<---- New replace Old
<-O-> Interchangeable with another part(s)
<-X-> Not interchangeable

https://tractormanualz.com/

TD1300F-1-015

OIL PAN GROUP

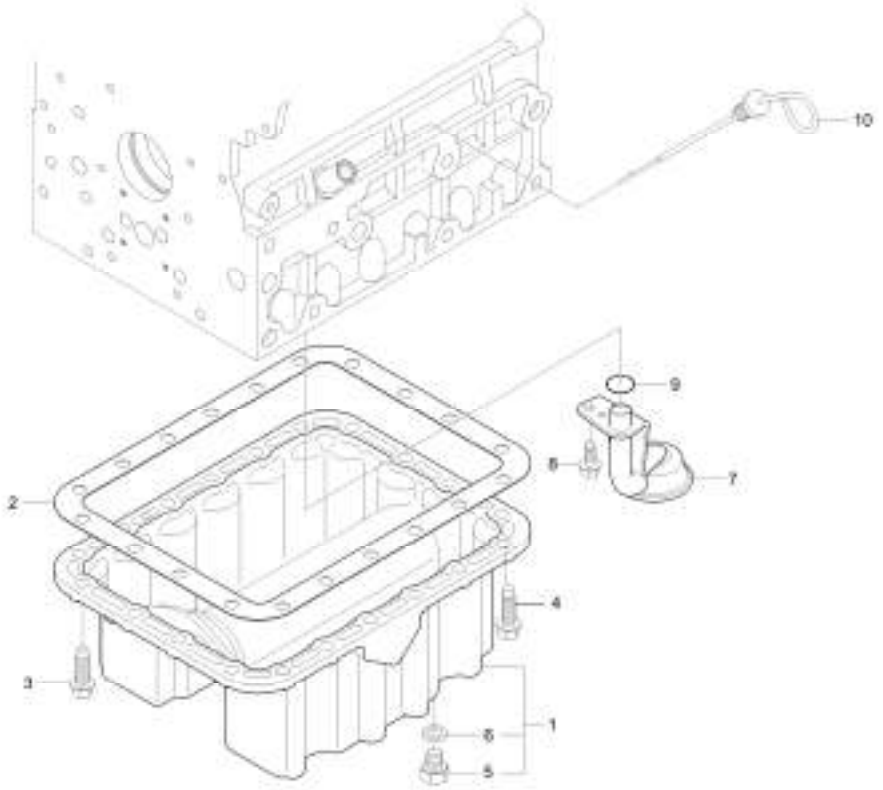

A : LK2554

No.	Part Number	Description	Qty A	Qty B	Qty C	Qty D	Qty E	I.C	Remark
1	E5500-A0071	PAN ,OIL	1						
1	E5500-A0072	OIL PAN ASSY	1					<------	
2	E5515-01622	GASKET,OIL PAN v	1						
3	01674-51032	BOLT, FLANGE	18						
4	E6200-91092	BOLT WITH WASHER	2						HEX14,M10* 1.25*125
5	15221-3375-2	PLUG, OIL DRAIN dnr v	2						HEX19,M12* 1.25*28
6	04717-01200	WASHER, SEAL	2						
7	E5900-32112	FILTER, OIL 1	1						
8	01654-50820	BOLT, FLANGE WITH PIN	1						
9	04811-00140	O_RING dnr v	1						
10	E5900-36412	GAUGE OIL v	1						
10	E5900-36413	GAUGE, OIL v	1					<------	
10	E5900-36414	OIL GAUGE	1					<------	
10	E5900-36415	GAUGE,OIL v	1					<----->	

----> Old replace New
<---- New replace Old
<-X-> Not interchangeable
<---> Interchangeable
<-O-> Interchangeable with another part(s)
* Please place an order assy(*)

https://tractormanualz.com/

TD1300-020

CYLINDER HEAD COVER GROUP

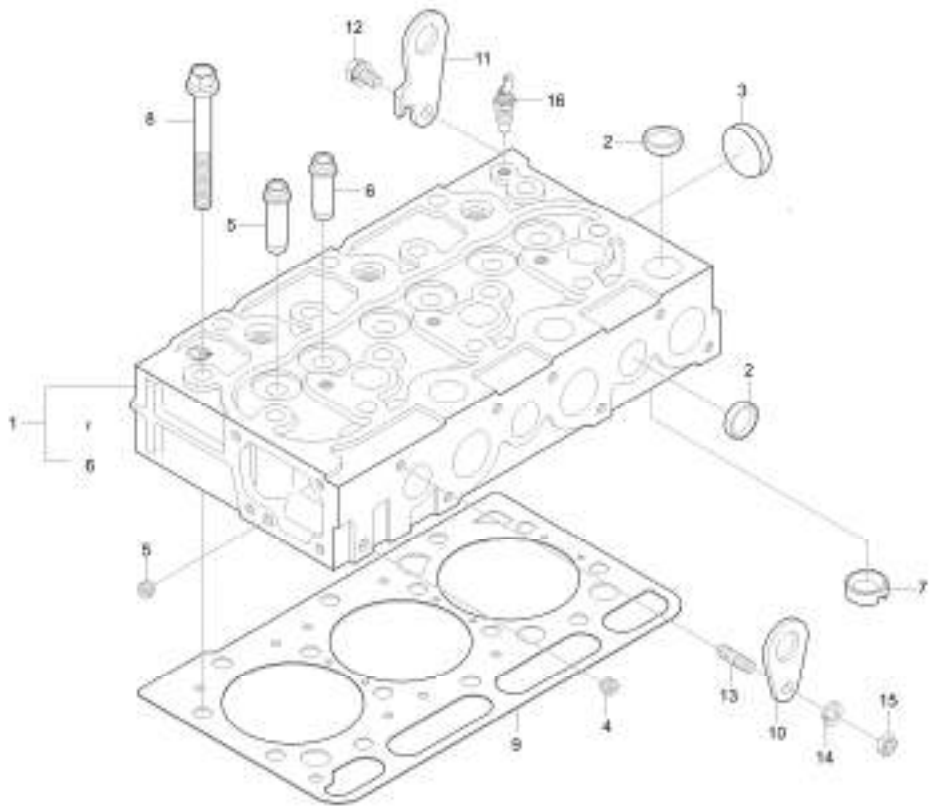

A : LK2554

No.	Part Number	Description	Qty A	Qty B	Qty C	Qty D	Qty E	I.C	Remark
1	E5500-03042	ASSY,HEAD CYLINDER v	1 ~ 123000050						
1	E5500-03045	ASS'Y, CYLINDER HEAD v	1 123000051 ~					<--X-->	
1	E5500-03046	CYLINDER HEAD ASSEMBLY v	1					<------	
2	15221-0337-3	CAP SEALING	9						T1.6*40*40
3	15221-0349-3	CAP SEALING	1						T1.6*60*60
4	15521-9602-2	PLUG dnr v	2						-
4	E5900-96021	OBS USE E5900-96022	2					<----->	N
5	E6301-13581	GUIDE, INTAKE VALVE	3						DIA20*53
5	E6850-13581	GUIDE, INTAKE VALVE	3					<----->	
6	E6301-13561	GUIDE, VALVE	3						DIA20*53
6	E6850-13561	GUIDE,EXHAUST VALVE v	3					<----->	
7	E5500-03142	OBS HOT FLUG	3						
7	E5500-03143	HOT FLUG	3					<----->	
8	E5500-03451	BOLT,HEAD v	12						
8	E5500-03452	BOLT, CYL HEAD	12					<----->	
9	E5500-03313	GASKET HEAD v	1						
9	E5500-03314	GASKET,HEAD dnr v	1					<----->	
9	E5500-03315	GASKET, CYL HEAD dnr v	1					<------	

----> Old replace New
<---- New replace Old
<-X-> Not interchangeable
<---> Interchangeable
<-O-> Interchangeable with another part(s)
* Please place an order assy(*)

https://tractormanualz.com/

TD1300-020

CYLINDER HEAD COVER GROUP

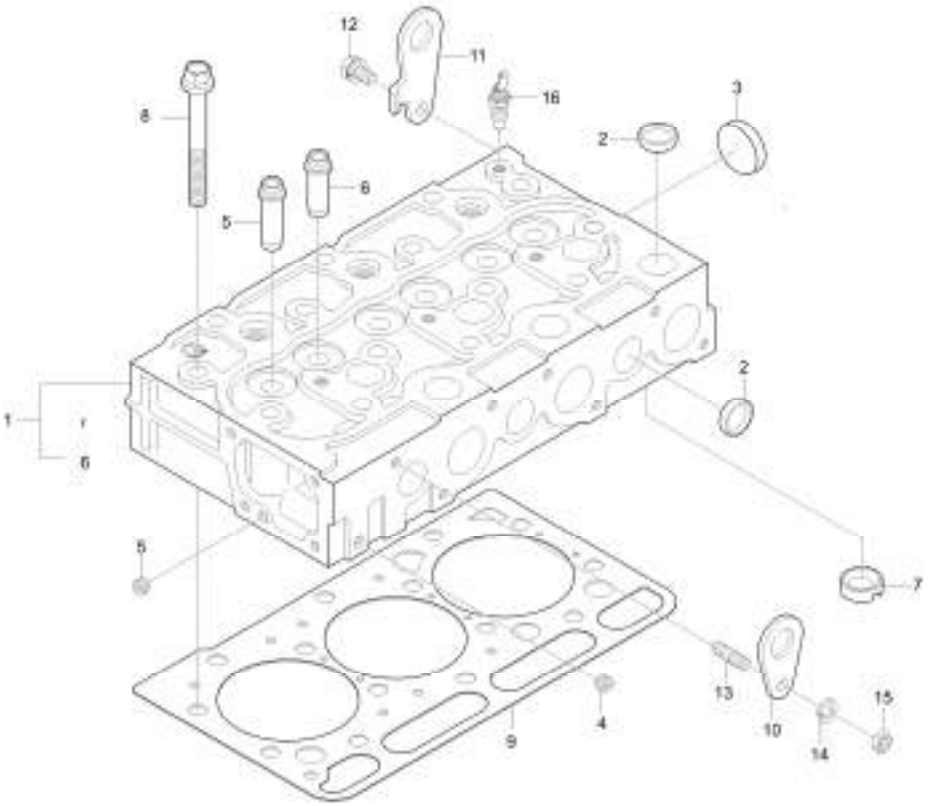

A : LK2554

No.	Part Number	Description	Qty A	Qty B	Qty C	Qty D	Qty E	I.C	Remark
10	15221-0175-1	ENGINE HOOK	1						T4*40*64
11	E6305-01751	HOLDER, ENGINE	1						
12	01123-50816	Hex Head Cap Screw	1						M8XP1.25
13	01513-50822	STUD	1						M8XP1.25
14	02156-50080	NUT	1						M8XP1.25
15	04512-50080	SPRING WASHER	1						M08
16	15301-3283-0	SWITCH, THERMOMETER	1						

----> Old replace New <---- New replace Old <-X-> Not interchangeable
<---> Interchangeable <-O-> Interchangeable with another part(s)
* Please place an order assy(*)

https://tractormanualz.com/

TD1300-030

GEAR CASE GROUP

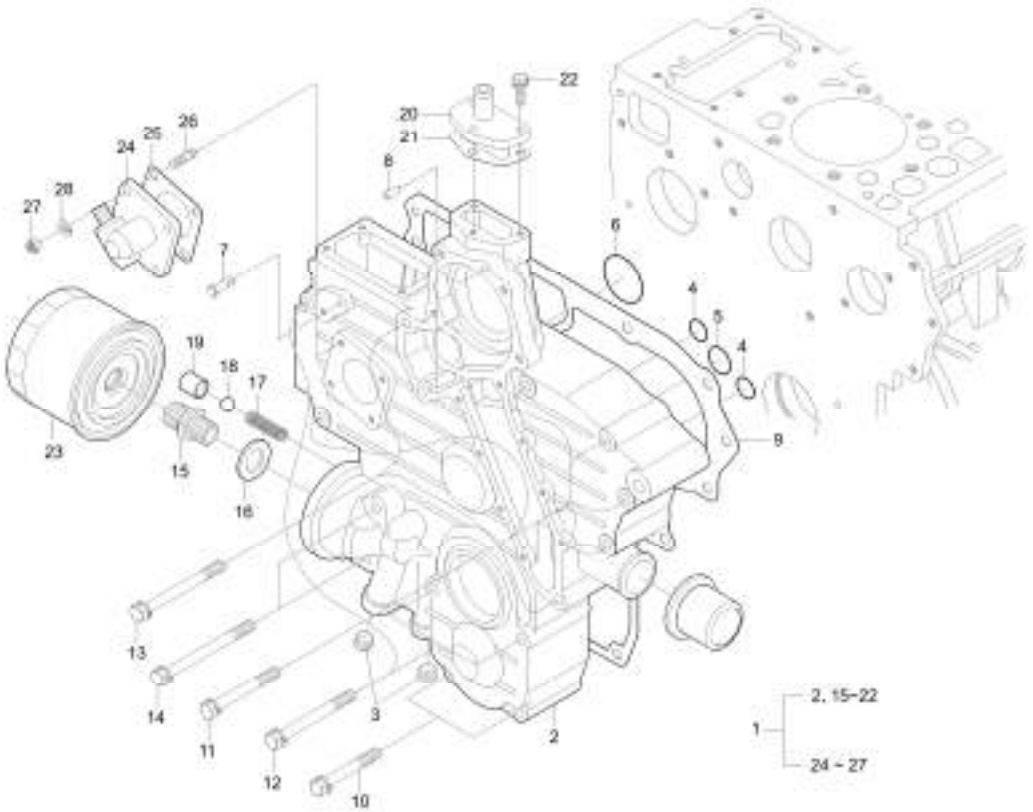

A : LK2554

No.	Part Number	Description	Qty A	Qty B	Qty C	Qty D	Qty E	I.C	Remark
1	E6200-A0200	GEAR CASE ASS'Y v	1						
2	E6300-04112	CASE,GEAR	1						
2	E6300-04113	CASE,GEAR	1					<------	
2	E6300-04114	OB GEAR CASE obs	1					<----->	
3	15521-9603-2	PLUG	2						DIA12*12,PT 1/4
4	04811-00150	O RING	2						DIA14.8
5	04811-00200	O RING v	1						DIA19.8
6	04811-00360	O RING	1						
7	15221-5628-2	PIN, STARTER SPRING	1						DIA10*27
8	05012-00612	PIN, PARALLEL	2						
9	E6300-04133	GASKET GEAR CASE	1						
9	E6300-04134	GASKET GEAR CASE	1					<------	
9	E6300-04135	GEARCASE GASKET v	1					<------	
10	01123-50860	BOLT, WASHER	2						M8XP1.25
11	01123-50870	WITH_WASHER_BOLT	5						M8XP1.25
12	01123-50880	WASHER BOLT	3						M8XP1.25
13	01123-50885	BOLT, WASHER	3						
14	01123-50895	BOLT, WASHER	2						M8*1.25

----> Old replace New <---- New replace Old <-X-> Not interchangeable
<---> Interchangeable <-O-> Interchangeable with another part(s)
* Please place an order assy(*)

https://tractormanualz.com/

TD1300-030

GEAR CASE GROUP

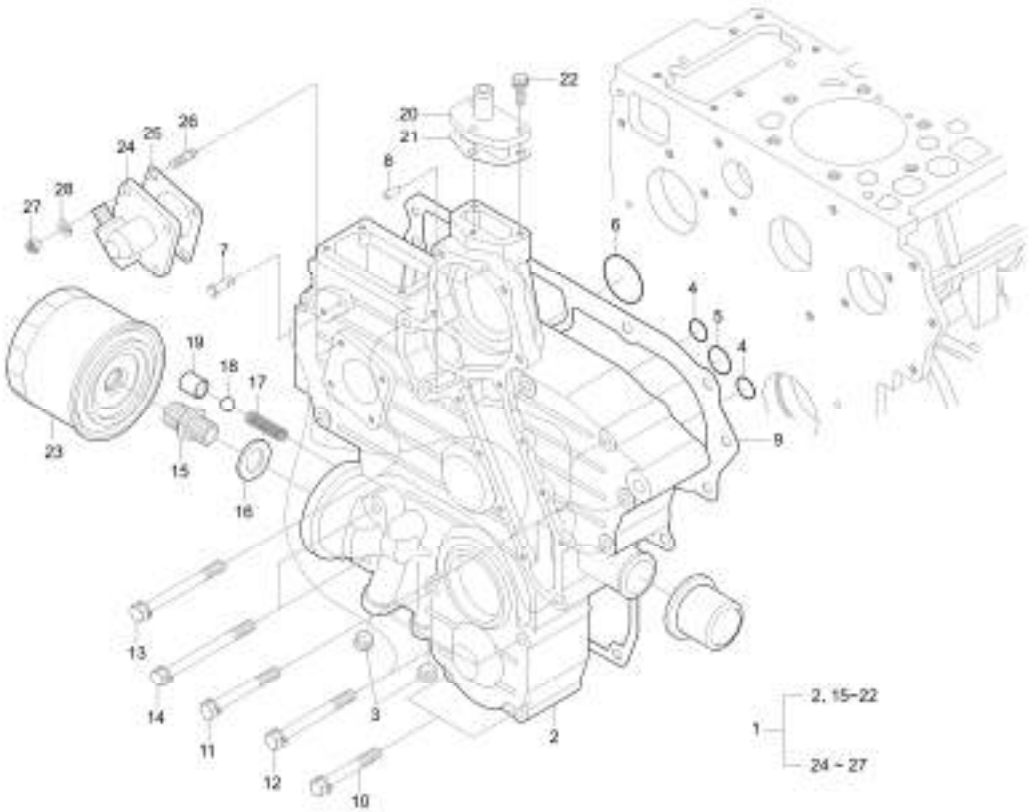

A : LK2554

No.	Part Number	Description	Qty A	Qty B	Qty C	Qty D	Qty E	I.C	Remark
15	15521-3229-1	TUBE, CONNECTING	1						HEX24,M20*1.5*47
16	04011-50180	WASHER, PLAIN	1						M18
17	15241-3695-2	SPRING	1						DIA1.2
18	E5500-36932	SEAT,VALVE	1						DIA16*21
19	07715-03213	STEEL BALL	1						13/32"(10.3188)
20	15521-7332-1	FLANGE, COOLING WATER RETURN	1						
21	15521-7333-1	GASKET	1						T0.5*68*43
22	01023-50620	BOLT, WASHER	3						M6XP1.0
23	E6201-32443	OIL FILTER sp v	1						
24	E5205-58812	ASSY METER, HOUR v OBS	1						
25	15221-8813-1	HOUR METER GASKET	1						T0.5*60*60
26	15221-8821-1	STUD	4						DIA6,M6*1.0*32
27	02056-50060	NUT	4						M6XP1.0
28	04512-50060	WASHER, SPRING	4						M06

----> Old replace New <---- New replace Old <-X-> Not interchangeable
<---> Interchangeable <-O-> Interchangeable with another part(s)
* Please place an order assy(*)

https://tractormanualz.com/

TD1400-050

MAIN BEARING CASE GROUP

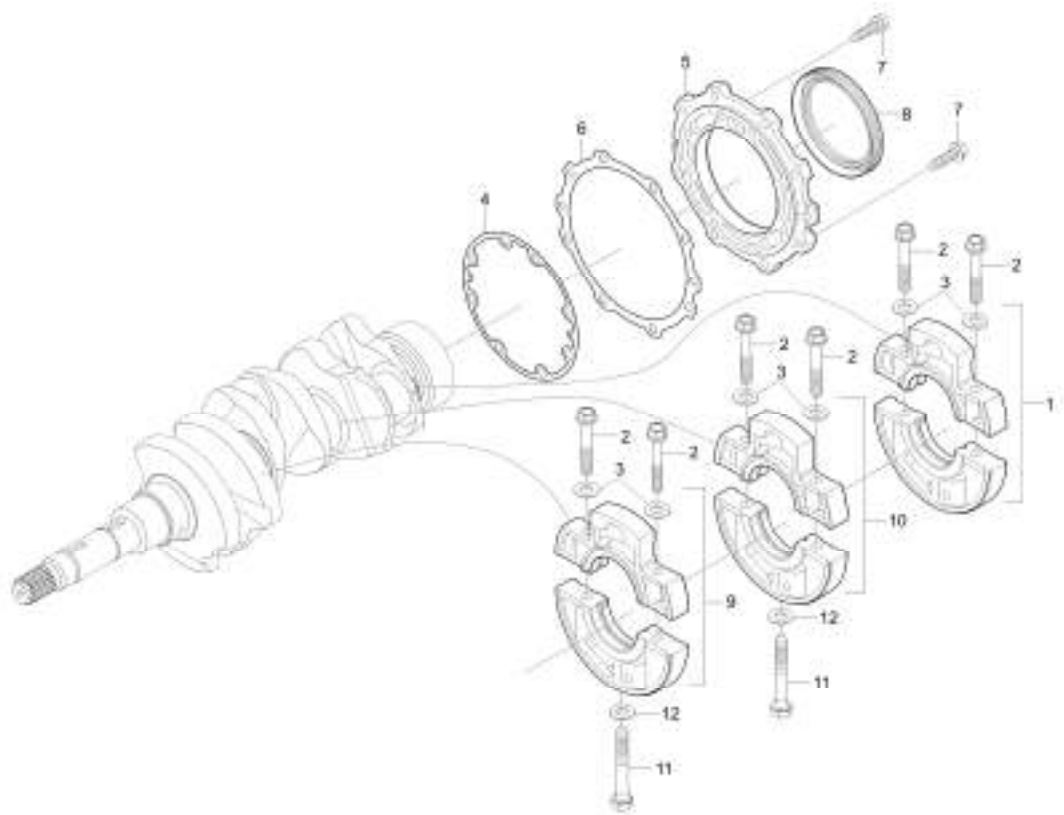

A : LK2554

No.	Part Number	Description	Qty A	Qty B	Qty C	Qty D	Qty E	I.C	Remark
1	E6200-A0100	MAIN BEARING CASE ASSY	1						
2	15521-0454-3	BOLT 1, BEARING CASE	6						HEX14,M8*1.25*67
3	15521-9401-1	WASHER,PLAIN	6						T1.2*17*17
4	E5500-04362	GASKET v	1						
4	E5500-04363	GASKET,BEARING dnr v	1					<------	
4	E5500-04364	GASKET, BEARING CASE v	1					<------	
4	E5500-04365	GASKET, BEARING CASE	1					<------	
5	E5500-04812	COVER, BEARING CASE	1						
5	E5500-04813	COVER, MAIN BEARING CASE obs v	1					<----->	
6	E5500-04822	GASKET, COVER	1						
6	E5500-04823	GASKET, COVER v	1					<------	
7	01654-50830	BOLT, FLANGE WITH PIN	16						M8x1.25
8	E5500-04462	SEAL, OIL	1						
8	E5500-04463	SEAL,OIL v	1					<--X-->	
8	E5500-04464	OIL SEAL v	1					<----->	-
9	E6200-A0080	MAIN BEARING CASE ASSY, 1	1						
10	E6200-A0090	MAIN BEARING CASE ASS'Y 2	1						
11	15291-0456-2	BOLT 2, BEARING CASE	2						HEX17,M10*1.25*88

----> Old replace New
<---- New replace Old
<-X-> Not interchangeable
<---> Interchangeable
<-O-> Interchangeable with another part(s)
* Please place an order assy(*)

https://tractormanualz.com/

TD1400-050

MAIN BEARING CASE GROUP

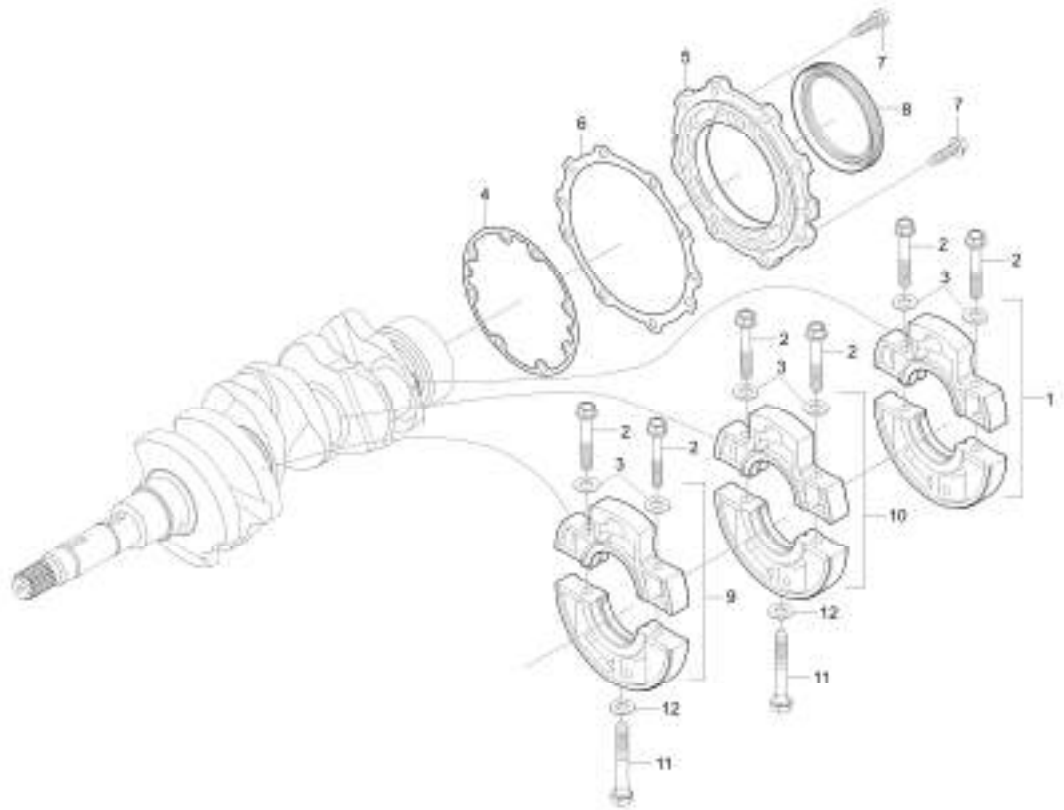

A : LK2554

No.	Part Number	Description	Qty A	Qty B	Qty C	Qty D	Qty E	I.C	Remark
12	15521-9402-1	WASHER	2						T1.6*23*23
12	04014-50100	WASHER, PLAIN	2					<----->	M10

----> Old replace New
<---> Interchangeable
* Please place an order assy(*)
<---- New replace Old
<-O-> Interchangeable with another part(s)
<-X-> Not interchangeable

https://tractormanualz.com/

TD1400B-1-060

MANIFOLD GROUP

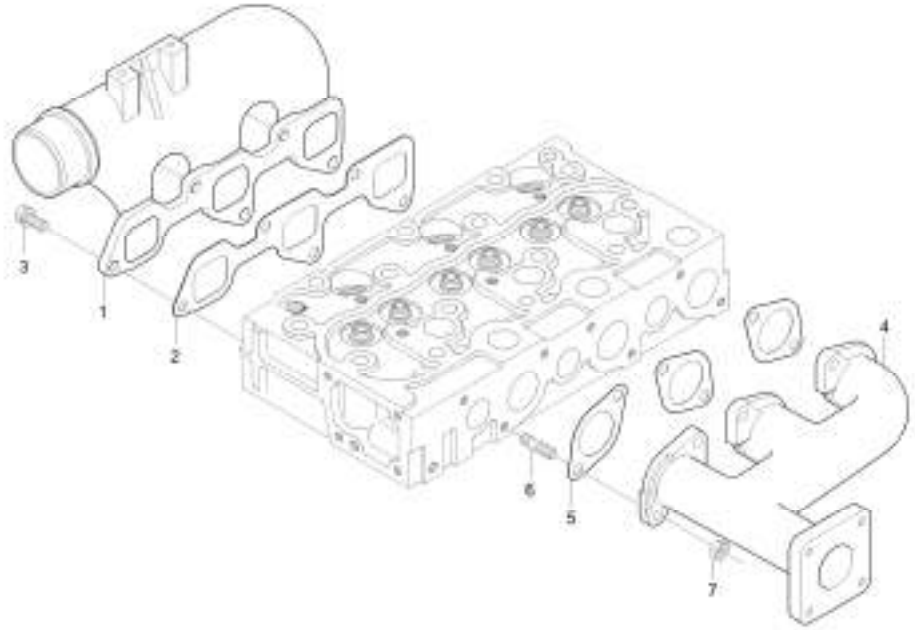

A : LK2554

No.	Part Number	Description	Qty A	Qty B	Qty C	Qty D	Qty E	I.C	Remark
1	E5500-11762	MANIFOLD,INTAKE	1						
1	E5500-11763	MANIFOLD,INLET	1					<----->	
2	15521-1182-1	USE E5500-11822 v	1						T1.0*72*255
2	E5500-11822	GASKET, INTAKE MANIFOLD	1					<------	t1.0
3	01123-50822	BOLT, WASHER	5						M8XP1.25
4	E5900-12312	MANIFOLD, EXHAUST v	1 823000001 ~						
4	E5900-12313	MANIFOLD, EXHAUST dnr v	1 223000001 ~					<----->	
5	15521-1235-1	USE E5800-12351 v	3						T1.0*82*48
5	E5800-12351	GASKET, EXHAUST MANIFOLD	3					<------	
5	E5800-12352	GASKET, EXHAUST MANIFOLD	1					<------	t0.25*2layer
6	01513-50822	STUD	6						M8XP1.25
7	02751-50080	FLANGE NUT 8MMX1.25P	6						M8XP1.25

----> Old replace New
<---> Interchangeable
* Please place an order assy(*)
<---- New replace Old
<-O-> Interchangeable with another part(s)
<-X-> Not interchangeable

https://tractormanualz.com/

TD1400B-1-063

AIR CLEANER GROUP

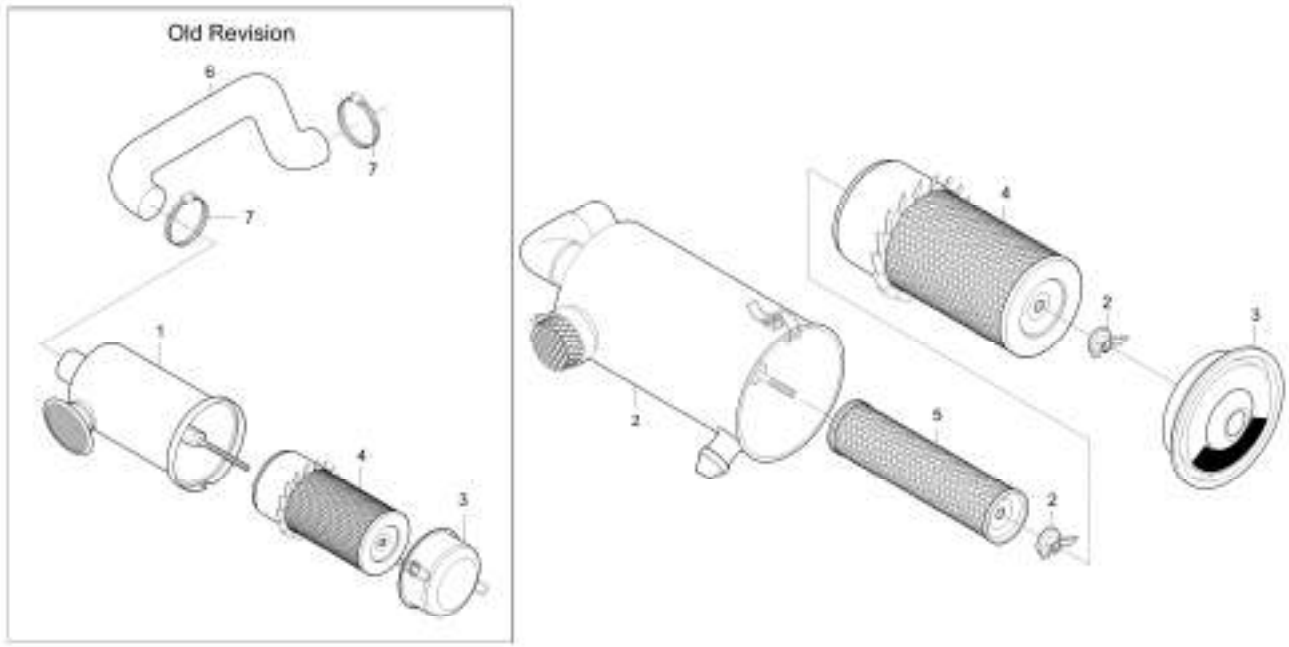

A : LK2554

No.	Part Number	Description	Qty A	Qty B	Qty C	Qty D	Qty E	I.C	Remark
1	E5905-A0011	ASS'Y BODY,AIRCLEANER	1						
1	E5905-A0012	ASS'Y AIR CLEANER	1 ~ 923000999					<------	
1	E5900-11111	ASSY,AIRCLEANER BODY	1 023000001 ~					<--X-->	
2	02870-50100	NUT,WING	1						
2	E6200-92620	NUT,WING	2					<------	
3	15301-1116-1	COVER, AIR CLEANER	1						T1.0
3	E5800-11161	COVER, AIRCLEANER obs v	1					<------	
4	15307-1108-1	ELEMENT ASSY	1 ~ 923000999						
4	E6300-11081	ELEMENT, AIR CLEANER FILTER (OUT)	1 023000001 ~					<--X-->	
5	E6300-11091	ELEMENT, AIR CLEANER FILTER (IN)	1						
6	E5905-11621	HOSE, INLET	1						
7	15401-1172-1	BAND, HOSE	2						T1.0 스탠 61#

----> Old replace New
<---> Interchangeable
* Please place an order assy(*)
<---- New replace Old
<-O-> Interchangeable with another part(s)
<-X-> Not interchangeable

https://tractormanualz.com/

TD1300B-066

MUFFLER GROUP

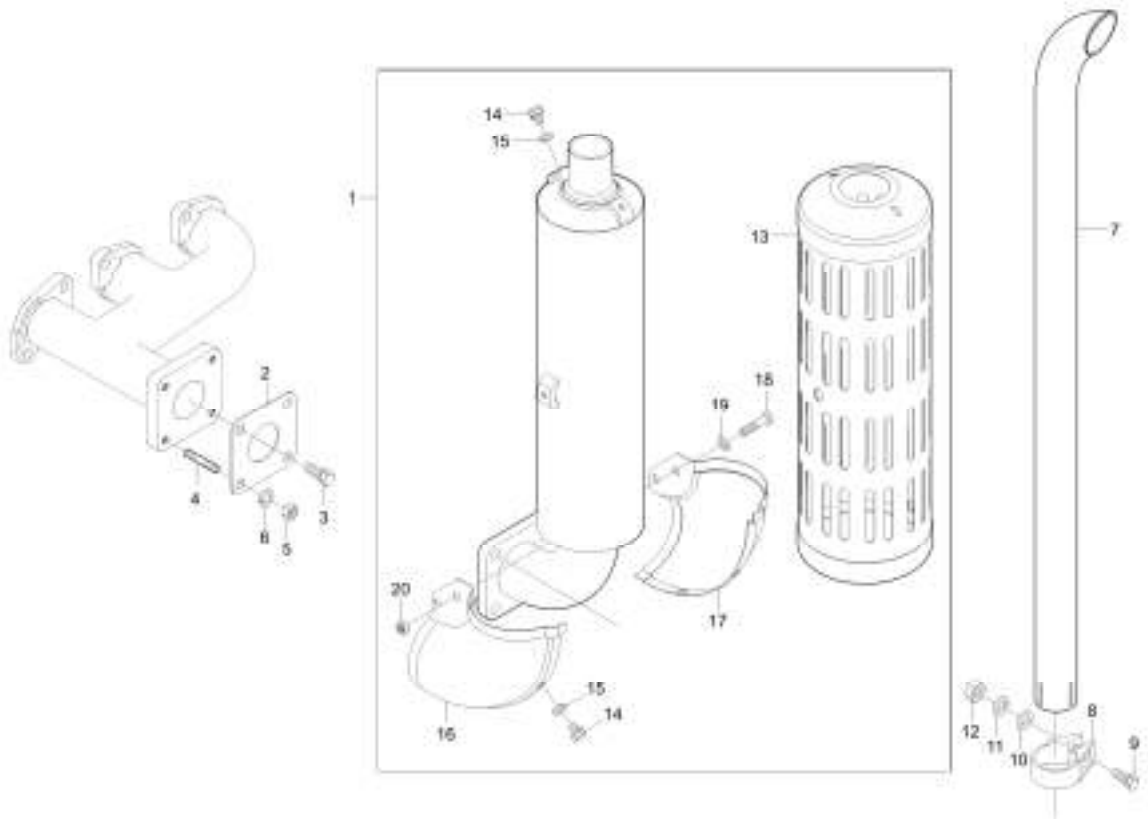

A : LK2554

No.	Part Number	Description	Qty A	Qty B	Qty C	Qty D	Qty E	I.C	Remark
1	T2280-A0071	USE T2280-A0073 v	1						
1	T2280-A0072	ASSY,MUFFLER v	1					<------	
1	T2280-A0073	ASSY,MUFFLER v	1					<------	
2	E5500-12372	GASKET v	1						t0.25*2 layer
2	E5800-12373	GASKET, MUFFLER	1					<------	T0.5
3	01123-50825	WITH_WASHER_BOLT	2						M8XP1.25
4	01513-50822	STUD	2						M8XP1.25
5	02156-50080	NUT	2						M8XP1.25
6	04512-50080	SPRING WASHER	2						M08
7	15301-1241-0	PIPE, EXHUST	1						DIA35*T1.2
7	E5500-12412	TUBE,EXHAUST	1 223000001 ~					<----->	
8	E5500-12432	BAND, HOSE obs v	1						
8	E5500-12433	BAND, HOSE v	1					<------	
8	E5500-12434	BAND, HOSE v	1 523000001 ~					<------	
8	E5500-12435	BAND, HOSE v	1 223000001 ~					<----->	
9	01123-50825	WITH_WASHER_BOLT	1						M8XP1.25
10	04512-50080	SPRING WASHER	1						M08
11	04013-50080	WASHER	1						

----> Old replace New
<---- New replace Old
<-X-> Not interchangeable
<---> Interchangeable
<-O-> Interchangeable with another part(s)
* Please place an order assy(*)

https://tractormanualz.com/

TD1300B-066

MUFFLER GROUP

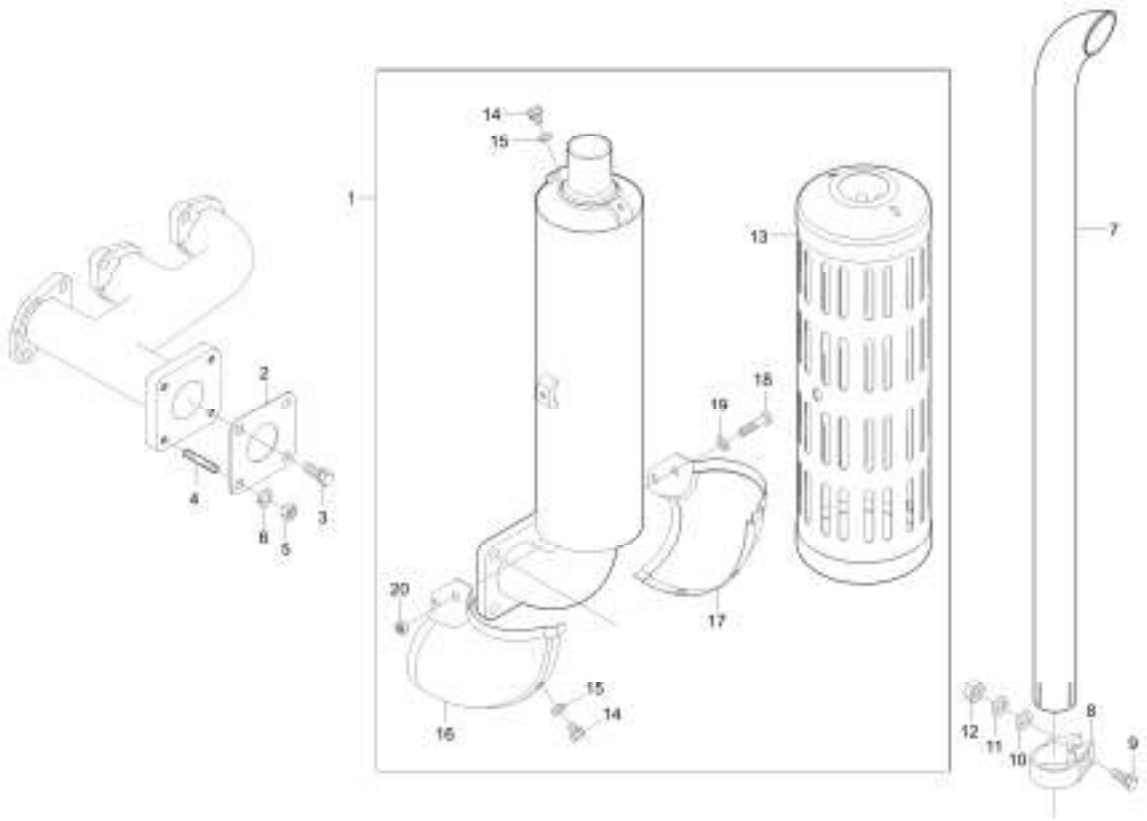

A : LK2554

No.	Part Number	Description	Qty A	Qty B	Qty C	Qty D	Qty E	I.C	Remark
12	02156-50080	NUT	1						M8XP1.25
13	76711-5452-0	COVER, MUFFLER v	1						
13	E5500-54522	COVER, MUFFLER obs v	1					<----->	
14	01202-50612	BOLT, WASHER	5						
15	04013-50060	WASHER, PLAIN	5						M6
16	E5500-54552	COVER,MUFFLER LH v	1						
16	E5500-54553	PLANGE COVER, MUFFLER (LH)	1					<----->	
17	E5500-54562	COVER,MUFFLER RH v	1						
17	E5500-54563	PLANGE COVER, MUFFLER (RH) v	1					<----->	
18	01050-50628	BOLT	2						
19	04512-50060	WASHER, SPRING	2						M06
20	02014-50060	NUT	2						M6*P1.0

----> Old replace New <---- New replace Old <-X-> Not interchangeable
<---> Interchangeable <-O-> Interchangeable with another part(s)
* Please place an order assy(*)

https://tractormanualz.com/

TD1300-070

VALVE ROCKER ARM GROUP

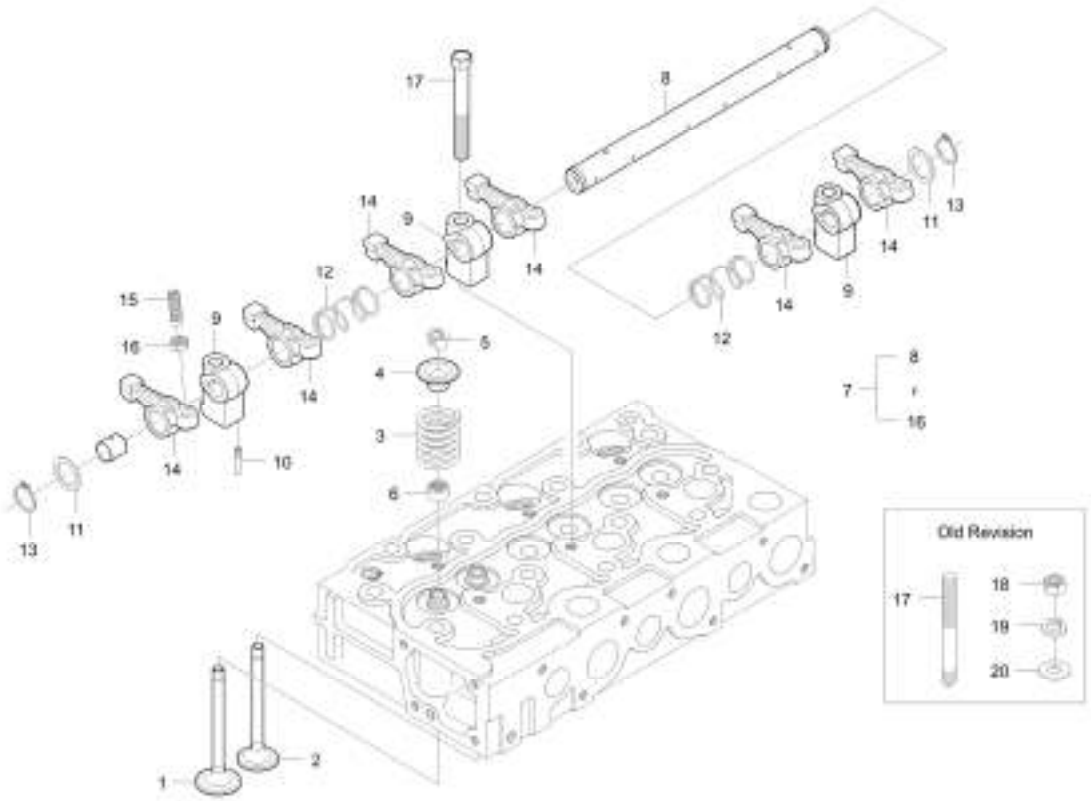

A : LK2554

No.	Part Number	Description	Qty A	Qty B	Qty C	Qty D	Qty E	I.C	Remark
1	15221-1311-4	VALVE, INTAKE	3 ~ 023000150						58G
1	E5500-13112	VALVE, INTAKE	3 123000001 ~					<--X-->	
2	15221-1312-4	EXHAUST VALVE	3 ~ 023000150						50G
2	E5500-13122	EXHAUST VALVE	3 123000001 ~					<--X-->	
3	15221-1324-2	SPRING, VALVE	6						DIA3.5
4	E5500-13332	RETAINER,VALVE SPRING v dnr	6						
5	15221-1336-1	COLLET, VALVE SPRING dnr v	12						DIA14*15
5	E5500-13362	COLLET,VALVE SPRING v	12					<------	
6	15221-1315-2	SEAL,VALVE STEM	6						
6	E5500-13152	SEAL, VALVE STEM	6					<------	
7	15325-0001-A	ROCKER ARM SHAFT assy	1						
8	15321-1405-1	SHAFT ASSY,ROCKERARM obs v	1						
9	15221-1435-1	SUPPORT, ROCKER ARM obs v	3						40G
10	15221-1442-1	SCREW, HOLDER	1						DIA6,M5*0.8 *25
11	15221-1443-1	WASHER, PLAIN obs v	2						T1.2*23*23
12	15221-1431-2	SPRING, ROCKER ARM obs v	2						DIA1.6
13	04612-00140	RING,SNAP	2						DIA14
14	15601-1403-1	ASSY ARM, ROCKER obs v	6						

----> Old replace New
<---- New replace Old
<-X-> Not interchangeable
<---> Interchangeable
<-O-> Interchangeable with another part(s)
* Please place an order assy(*)

https://tractormanualz.com/

TD1300-070

VALVE ROCKER ARM GROUP

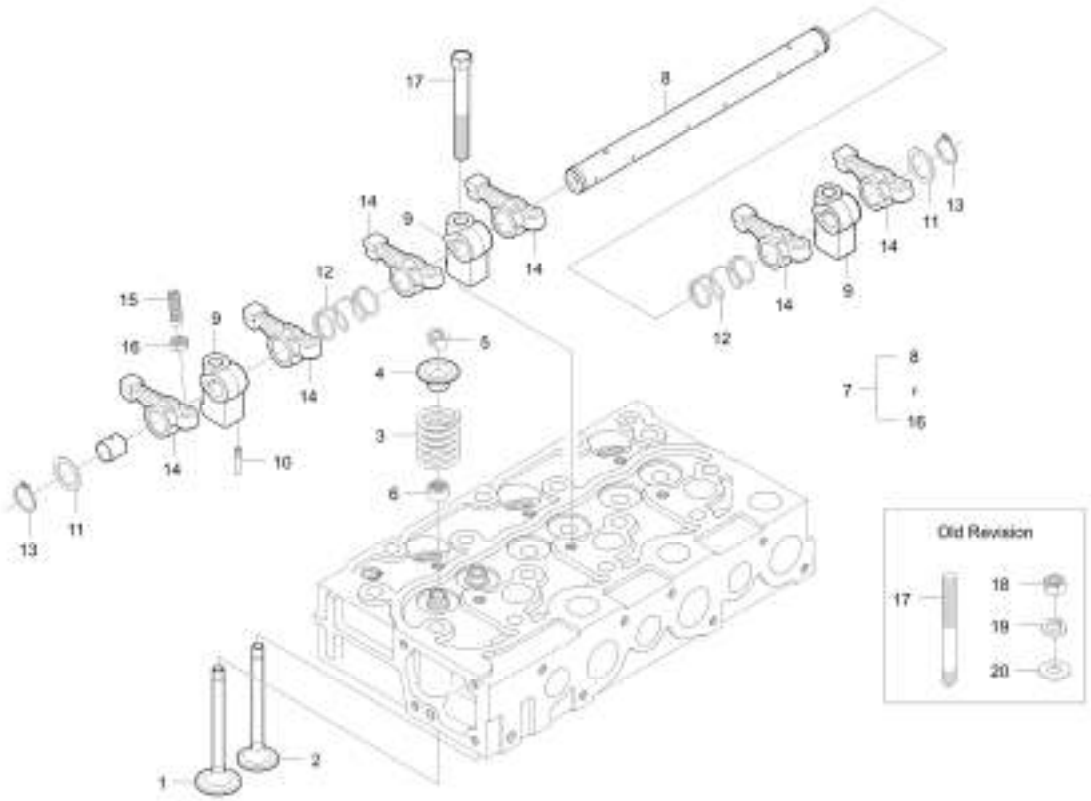

A : LK2554

No.	Part Number	Description	Qty A	Qty B	Qty C	Qty D	Qty E	I.C	Remark
15	15521-1423-1	SCREW, ADJUSTING obs v	6						DIA10,M8*1.0*34
15	E5500-14232	SCREW, ADJUSTING	6					<------	DIA10,M8*1.0*34
16	15021-1424-1	NUT	6						HEX12,M8*1.0*11
17	15521-9150-1	STUD	3						DIA8,M8*1.25*102
17	E5500-91501	BOLT, ROCKER ARM SUPPORT	3					<--X-->	M8*1.25-56.5

----> Old replace New
<---> Interchangeable
* Please place an order assy(*)
<---- New replace Old
<-O-> Interchangeable with another part(s)
<-X-> Not interchangeable

https://tractormanualz.com/

TD1300B-080

CYLINDER HEAD COVER GROUP

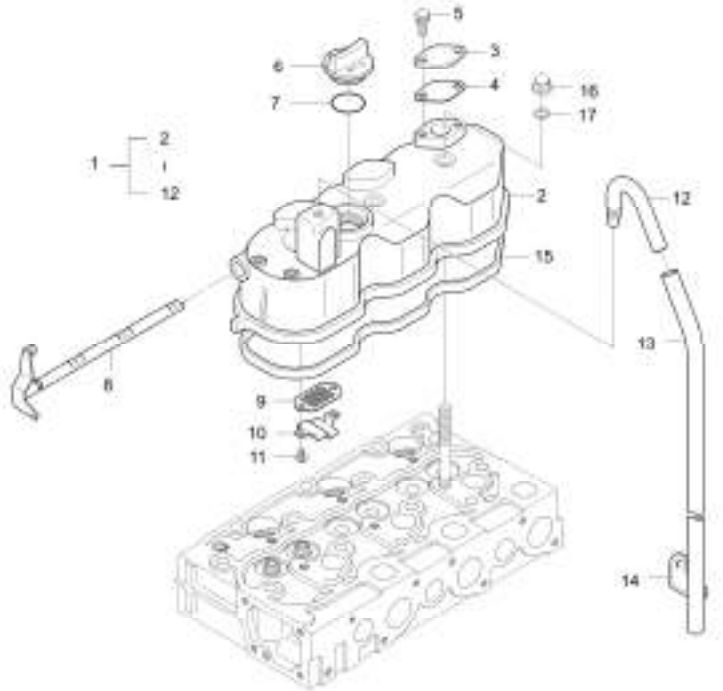

A : LK2554

No.	Part Number	Description	Qty A	Qty B	Qty C	Qty D	Qty E	I.C	Remark
1	15525-0011-A	HEAD COVER ASSY	1						
1	E5500-14502	ASSY,HEADLAMP	1					<------	
1	E5500-14505	A'SSY CYLINDER HEAD COVER	1					<----->	
2	E5405-14514	COVER, CYLINDER HEAD	1						
3	15221-6663-3	COVER, DECOMPRESS ADJUSTING HOLE obs v	3						T4*34*52
4	15221-6664-1	COVER, GASKET obs v	1						T0.5*34*52
5	01023-50614	BOLT, WASHER	6						M6P1.0
6	15221-3314-2	PLUG, OIL FILLER	1						PS1
6	E5500-33142	CAP, ENGINE OIL INLET v	1					<------	-
7	04811-50300	O RING	1						DIA29.4
8	15521-6604-1	ASSY SHAFT, DECOMPRESS obs v	1						
9	15521-0514-1	PLATE, ELEMENT obs v	1						T0.8*56*29
10	15521-0537-1	PLATE, OIL PROTECTION obs v	1						T0.29*31*63
11	15521-9331-1	SCREW, WASHER	2						DIA9,M5*0.8 *19
12	E5205-05552	CONNECTOR	1						OD13.8*60*T 2.3
13	15321-0551-4	TUBE, AIR BREATHER obs v	1						DIA16*560*T 2
14	15341-0559-1	CLAMP	1						DIA2*106
15	15521-1452-2	GASKET, HEAD COVER	1						

----> Old replace New <---- New replace Old <-X-> Not interchangeable
<---> Interchangeable <-O-> Interchangeable with another part(s)
* Please place an order assy(*)

https://tractormanualz.com/

TD1300B-080

CYLINDER HEAD COVER GROUP

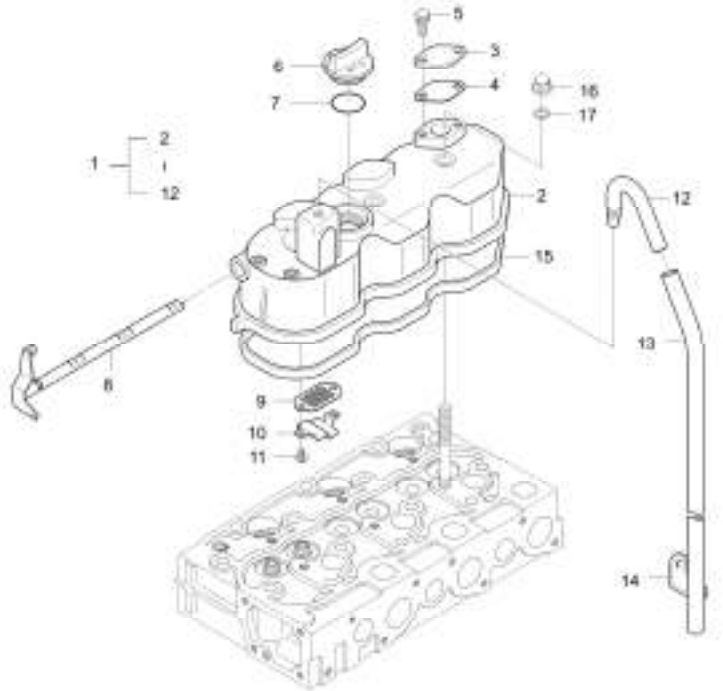

A : LK2554

No.	Part Number	Description	Qty A	Qty B	Qty C	Qty D	Qty E	I.C	Remark
15	E5500-14522	GASKET,HEAD COVER v	1					<----->	
15	E5500-14523	GASKET, CYLINDER HEAD COVER	1					<----->	
16	15451-9233-2	NUT,CAP dnr v	3						HEX12,M8*1 .25*23
16	E5500-92332	NUT, CAP	3					<----->	HEX12,M8*1 .25*23
17	15021-3366-1	GASKET	3						T1.5

----> Old replace New
<---- New replace Old
<-X-> Not interchangeable
<---> Interchangeable
<-O-> Interchangeable with another part(s)
* Please place an order assy(*)

https://tractormanualz.com/

TD1300-090

CAMSHAFT GROUP

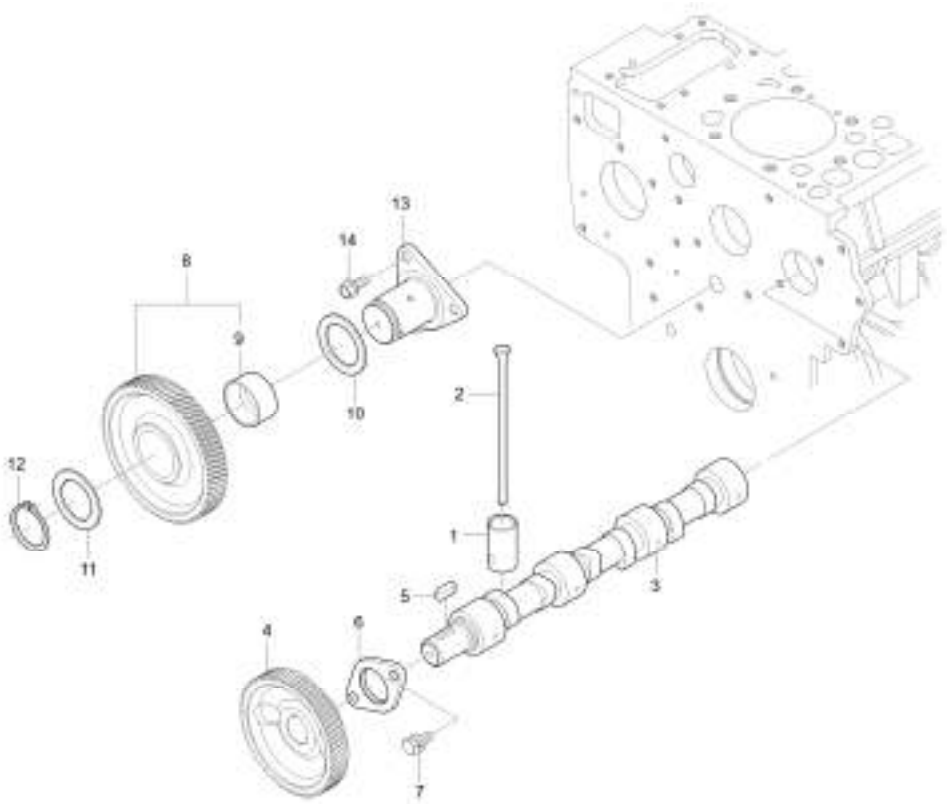

A : LK2554

No.	Part Number	Description	Qty A	Qty B	Qty C	Qty D	Qty E	I.C	Remark
1	E5500-15552	TAPPET	6						DIA26*51
1	E5500-15553	TAPPET	6					<------	-
2	15221-1511-2	ROD,PUSH dnr v	6						DIA15*157
2	E5500-15112	ROD, PUSH obs v	6					<------	
3	E5500-A0110	ASSY CAM SHAFT	1						
3	E5500-A0111	CAMSHAFT ASSY	1					<------	
4	15521-1651-1	USE 15521-16511	1						820G
5	05712-00720	KEY	1						W7XL20
6	15221-1627-3	STOPPER,CAMSHAFT	1						70G,T5.5
6	E5500-16272	CAMSHAFT,STOPPER	1					<----->	
7	01123-50818	BOLT, WASHER	2						M8XP1.25
8	15221-2401-1	IDLE GEAR assy	1						
8	E5500-24012	IDLE GEAR ASSY	1					<----->	
9	15221-2428-1	BUSH, IDLE GEAR	2						OD34*T4*18
10	15521-2436-1	COLLAR, 1	1						OD45*ID26*18
11	15521-2437-1	COLLAR, 1	1						OD45*ID24*T2.5
12	15221-2432-1	SNAP RING	1						T2.5
13	E5500-24252	SHAFT GEAR,IDLE	1						

----> Old replace New <---- New replace Old <-X-> Not interchangeable
<---> Interchangeable <-O-> Interchangeable with another part(s)
* Please place an order assy(*)

https://tractormanualz.com/

TD1300-090

CAMSHAFT GROUP

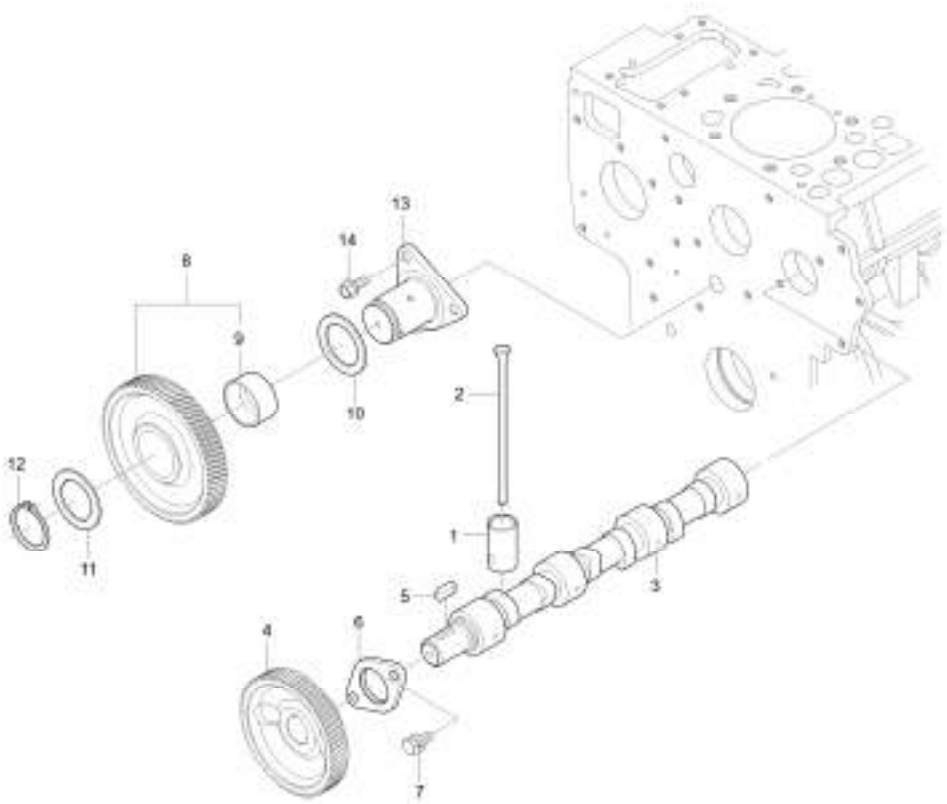

A : LK2554

No.	Part Number	Description	Qty A	Qty B	Qty C	Qty D	Qty E	I.C	Remark
14	01654-50820	BOLT, FLANGE WITH PIN	3						
14	01754-50820	BOLT, FLANGE	3					<----->	M8XP1.25

----> Old replace New
<---- New replace Old
<-X-> Not interchangeable
<---> Interchangeable
<-O-> Interchangeable with another part(s)
* Please place an order assy(*)

https://tractormanualz.com/

TD1300-100

PISTON & CRANKSHAFT GROUP

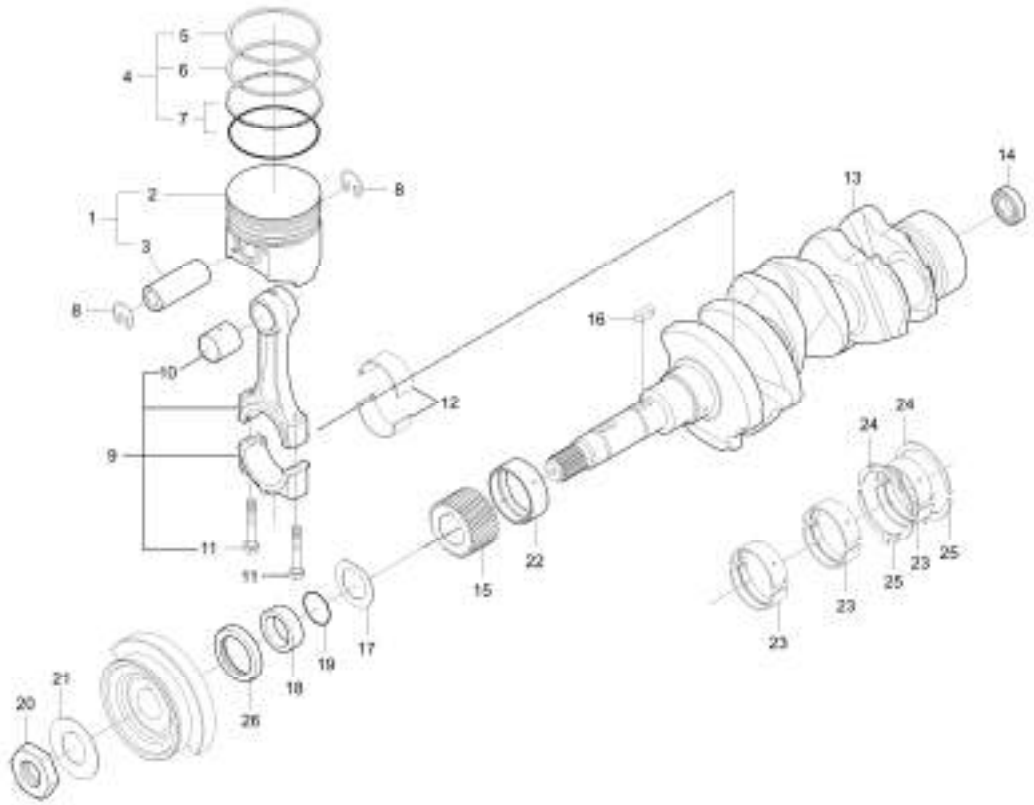

A : LK2554

No.	Part Number	Description	Qty A	Qty B	Qty C	Qty D	Qty E	I.C	Remark
1	E5500-21014	ASSY,PISTON&PIN	3						
1	E5500-21015	ASSY,PIN & PISTION v	3					<----->	
2	E5500-21115	PISTON	3						
2	E5500-21116	PISTON v	3					<----->	
3	15521-2131-1	PIN, PISTON obs v	3						DIA25*69
4	15201-2105-2	PISTON RING ASSY	3						
4	E5500-21053	ASSY RING, ENGINE PISTON	3					<------	
5	E5500-21153	RING 1,PISTON	3						
6	E5500-21164	RING 2,PISTON	3						
7	E5500-21203	OIL RING ASSY	3						
8	15221-2133-1	SNAP RING PISTON PIN	6						DIA1.6
8	E5500-21332	SNAP RING	6					<------	
9	E5500-22014	ASSY,CONECTING ROD v	3						
9	E5500-22015	CONNECTOR ROD ASSY	3					<------	
9	E5500-22016	CONNECTOR ROD ASSY	3					<----->	
10	E5500-21352	BUSH,PISTON&PIN v	3						
10	E5500-21353	BUSH, PISTON PIN	3					<----->	
11	15521-2214-1	BOLT, CONNECTING ROD	6						HEX13,M8*1.0*62

----> Old replace New
<---- New replace Old
<-X-> Not interchangeable
<---> Interchangeable
<-O-> Interchangeable with another part(s)
* Please place an order assy(*)

https://tractormanualz.com/

TD1300-100

PISTON & CRANKSHAFT GROUP

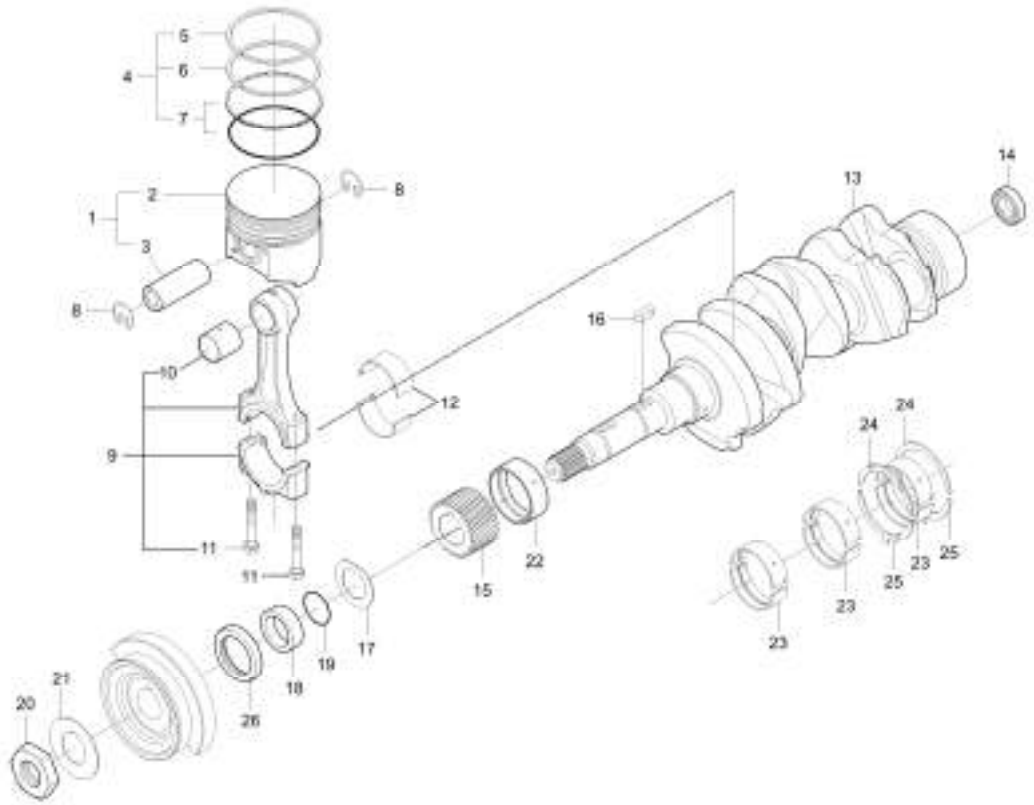

A : LK2554

No.	Part Number	Description	Qty A	Qty B	Qty C	Qty D	Qty E	I.C	Remark
11	E5500-22142	BOLT, CONNECTING ROD v	6					<------	HEX13,M8*1.0*62
11	E5800-22141	BOLT, ROD	6					<----->	
12	E6200-22312	METAL, CRANK PIN	6						
13	E5500-A0092	ASSY,CRANK SHAFT obs v	1						
14	08121-06002	BALL BEARING	1						#6002ZZ
15	15471-2411-1	GEAR, CRANK SHAFT	1						
15	E6200-24112	GEAR, CRANKSHAFT	1					<----->	
16	05712-00720	KEY	1						W7XL20
17	15471-2331-1	SLINGER, OIL	1						T1*53*53
18	19202-2325-1	SPACER, CRANKSHAFT dnr v	1						DIA44*20
19	04811-10300	O RING	1						DIA29.5
20	15221-2336-1	NUT, CRANKSHAFT	1						HEX46,M30*1.5*18
21	15221-2338-1	WASHER, CRANKSHAFT obs v	1						T1*64*64
21	E5500-23382	WASHER, CRANKSHAFT obs v	1					<----->	T1.0
22	E6200-23472	METAL 1, CRANKSHAFT	1						
23	E6200-23482	METAL, CRANKSHAFT-2	6						
24	15521-2353-1	SIDE METAL 1 V	2						OD72*ID58*T2
24	E6300-23531	Bearing Thrust - Crank Shaft-LWF	2					<----->	

----> Old replace New <---- New replace Old <-X-> Not interchangeable
<---> Interchangeable <-O-> Interchangeable with another part(s)
* Please place an order assy(*)

https://tractormanualz.com/

TD1300-100

PISTON & CRANKSHAFT GROUP

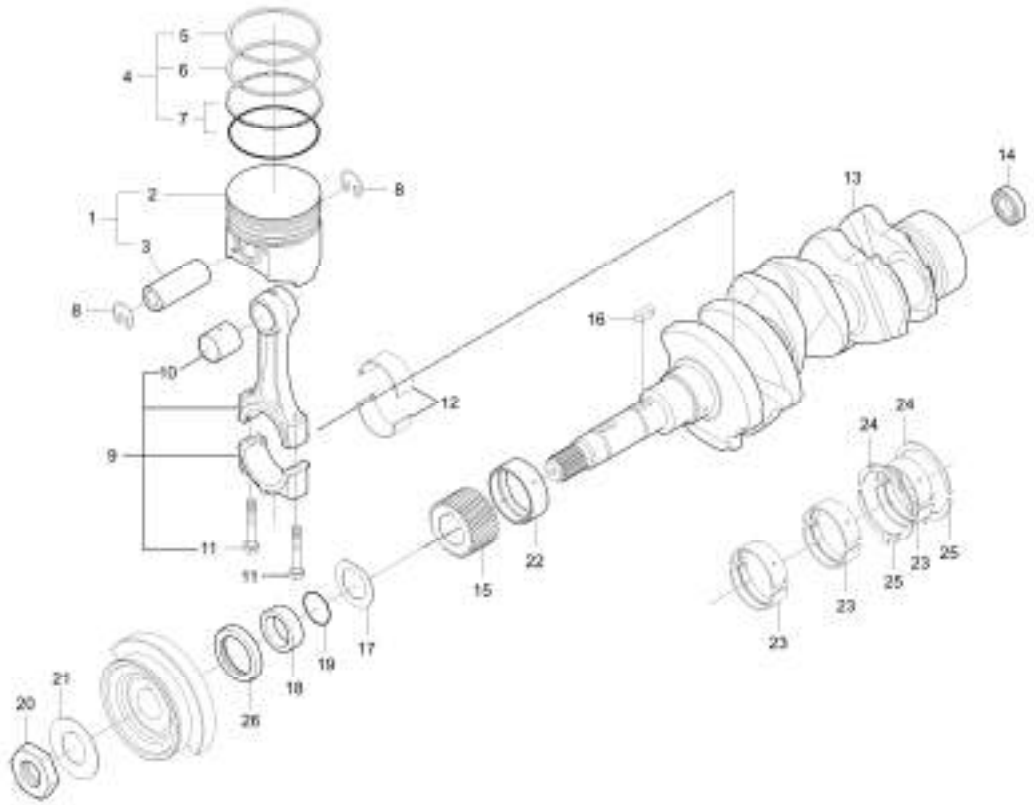

A : LK2554

No.	Part Number	Description	Qty A	Qty B	Qty C	Qty D	Qty E	I.C	Remark
25	19202-2354-1	SIDE METAL 2 v	2						OD72*TD58*T2
25	E6300-23541	SIDE METAL2	2					<----->	
26	E5500-11301	SEAL,OIL v	1						
26	E5500-11302	OIL SEAL	1					<------	-

----> Old replace New <---- New replace Old <-X-> Not interchangeable
<---> Interchangeable <-O-> Interchangeable with another part(s)
* Please place an order assy(*)

https://tractormanualz.com/

TD1300F-110

FLYWHEEL GROUP

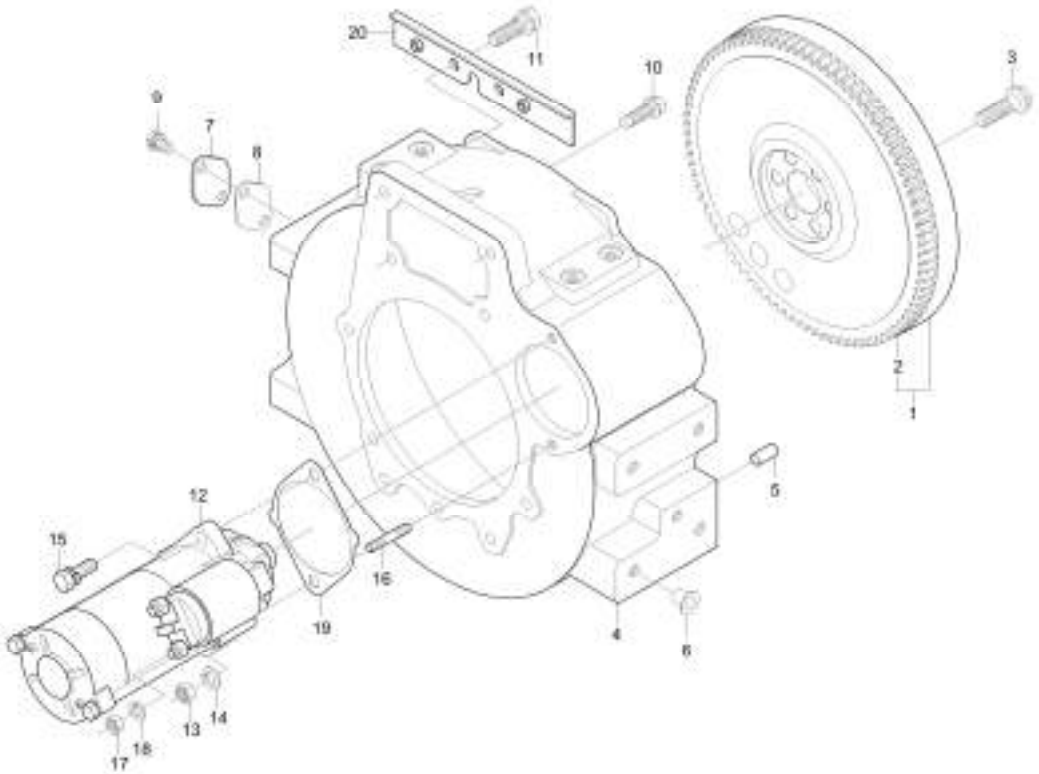

A : LK2554

No.	Part Number	Description	Qty A	Qty B	Qty C	Qty D	Qty E	I.C	Remark
1	E5500-25013	OB ASSY,FLYWHEEL	1 ~ 923000999						
1	E5500-25014	FLYWHEEL ASSY v	1 023000001 ~					<--X-->	
1	E5500-25015	FLYWHEEL ASSY v	1					<------	
2	15221-6382-4	RING GEAR	1						OD280*TD230*20
3	E5500-25163	BOLT,FLYWHEEL	6						HEX19,M12*1.25*51
3	E5500-25164	BOLT, FLYWHEEL v	6					<----->	
4	E5900-04614	HOUSING,FLYWHEEL dnr v	1						
4	E5900-04615	HOUSING, FLYWHEEL	1					<------	
5	05012-01025	PIN,STRAIGHT	2						
6	31220-1429-3	PLUG	10						
7	15521-0468-2	COVER, TIMING MARK	1						T2.6*65*28
8	15521-0479-2	GASKET, COVER	1						T2*60*42
9	01123-50816	Hex Head Cap Screw	2						M8XP1.25
10	01674-51032	BOLT, FLANGE	11						
11	01133-51240	BOLT, WASHER	2						M12XP1.25
12	E5500-63014	ASSY,STARTER MOTOR v	1						
12	E5500-63015	STARTING MOTOR v	1 123000001 ~					<------	
12	E5500-63016	ASSY, STARTER MOTOR sp v	1 D23000001 ~					<------	

----> Old replace New
<---- New replace Old
<-X-> Not interchangeable
<---> Interchangeable
<-O-> Interchangeable with another part(s)
* Please place an order assy(*)

https://tractormanualz.com/

TD1300F-110

FLYWHEEL GROUP

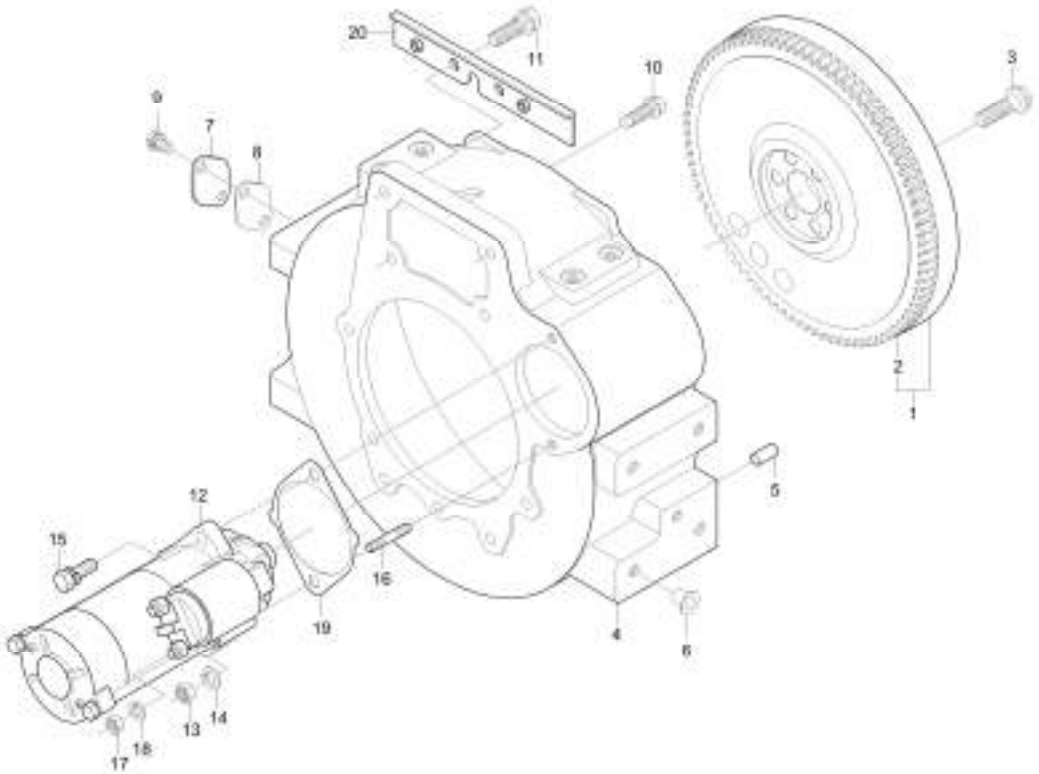

A : LK2554

No.	Part Number	Description	Qty A	Qty B	Qty C	Qty D	Qty E	I.C	Remark
13	02156-50080	NUT	1						M8XP1.25
14	04512-50080	SPRING WASHER	1						M08
15	01674-51032	BOLT, FLANGE	1						
15	01133-51030	BOLT, WASHER	1					<------	M10XP1.25
16	01517-51028	STUD	1						M10XP1.25
17	02176-50100	NUT v	1						M10XP1.25
18	04512-50100	WASHER, SPRING v	2						M10
19	E6200-04622	GASKET	1 823000001 ~						
19	E6200-04623	GASKET	1					<------	T0.5
20	T2540-35231	SUPPORT,SHUTTER PLATE	1						
20	T2540-35232	SUPPORT,SHUTTER PLATE	1 423000001 ~					<------	T4.0

----> Old replace New
<---- New replace Old
<-X-> Not interchangeable
<---> Interchangeable
<-O-> Interchangeable with another part(s)
* Please place an order assy(*)

https://tractormanualz.com/

TD1400-120

NOZZLE HOLDER GROUP

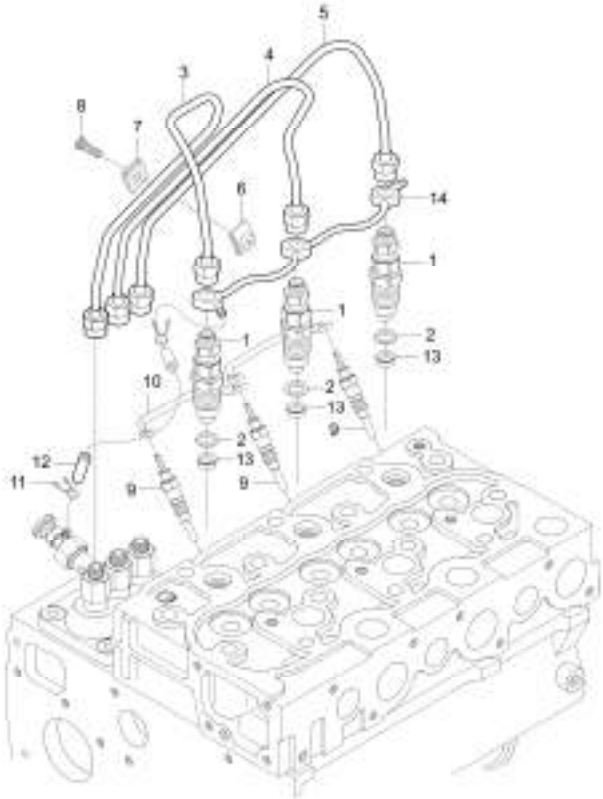

A : LK2554

No.	Part Number	Description	Qty A	Qty B	Qty C	Qty D	Qty E	I.C	Remark
1	15271-5302-1	NOZZLE HOLDER ASSY obs v	3						
1	E6300-53003	ASS'Y,NOZZLE HOLDER	3					<------	
1	E6300-53004	ASSY, NOZZLE HOLDER dnr v	3					<----->	
1	E6300-53005	INJECTOR dnr v	3					<------	
2	17011-5362-1	GASKET	3 ~ 923000999						T2
2	E6300-53621	GASKET	3 123000001 ~					<--X-->	
3	E5500-53712	TUBE 1, INJECTION	1						
3	E5500-53713	TUBE 1, INJECTION	1 ~ 923000999					<------	
3	E5500-53714	TUBE 1, DIVISION	1 123000001 ~					<--X-->	
4	E5500-53722	TUBE 2, DIVISION dnr v	1						
4	E5500-53723	TUBE 2, DIVISION	1 ~ 923000999					<------	
4	E5500-53724	TUBE 2, DIVISION	1 123000001 ~					<--X-->	
5	E5500-53732	TUBE 3, INJECTION v	1						
5	E5500-53733	TUBE 3, INJECTION v	1 ~ 923000999					<------	
5	E5500-53734	TUBE 3, DIVISION	1 123000001 ~					<--X-->	
6	15121-5385-2	CLAMP, HOSE	2						-
7	15121-5386-1	CLAMP 2, TUBE	2						T2*20*30
7	T4815-67371	HOLDER, TUBE	2					<------	-

----> Old replace New
<---> Interchangeable
* Please place an order assy(*)
<---- New replace Old
<-O-> Interchangeable with another part(s)
<-X-> Not interchangeable

https://tractormanualz.com/

TD1400-120

NOZZLE HOLDER GROUP

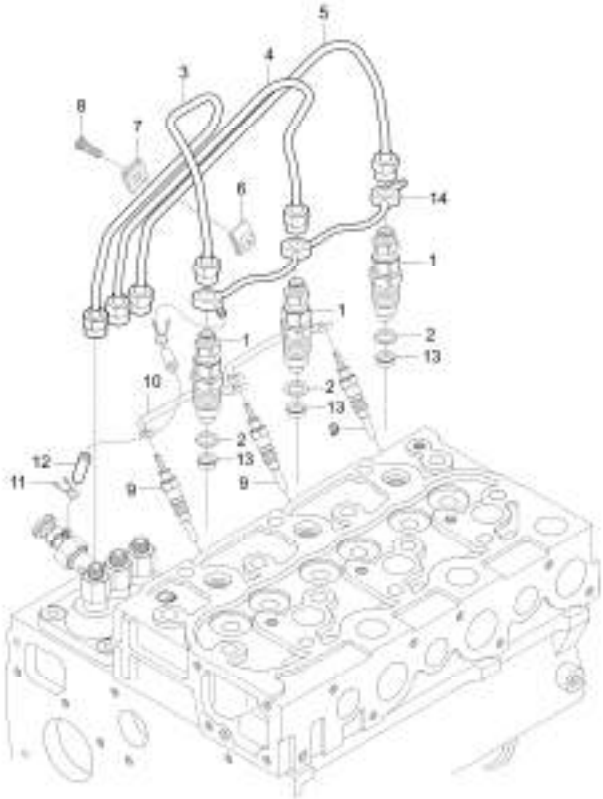

A : LK2554

No.	Part Number	Description	Qty A	Qty B	Qty C	Qty D	Qty E	I.C	Remark
8	03024-50520	SCREW, WASHER	2						DIA10*28
9	E5500-65512	USE E6303-65511, PLUG,GLOW v	3						
9	E6303-65511	PLUG,GLOW	3					<----->	N
10	15401-6556-1	CORD, GLOW PLUG	2						
11	14971-4275-1	CLAMP, HOSE	2						DIA1.0*ID7.8
12	09661-40300	HOSE, FUEL	1						
13	E6300-53651	SEAL, HEAT SHIELD	3						T0.8
14	E5500-42501	OVERFLOW HOSE ASSY	1						

----> Old replace New
<---> Interchangeable
* Please place an order assy(*)
<---- New replace Old
<-O-> Interchangeable with another part(s)
<-X-> Not interchangeable

https://tractormanualz.com/

TD1300-130

FUEL CAMSHAFT GROUP

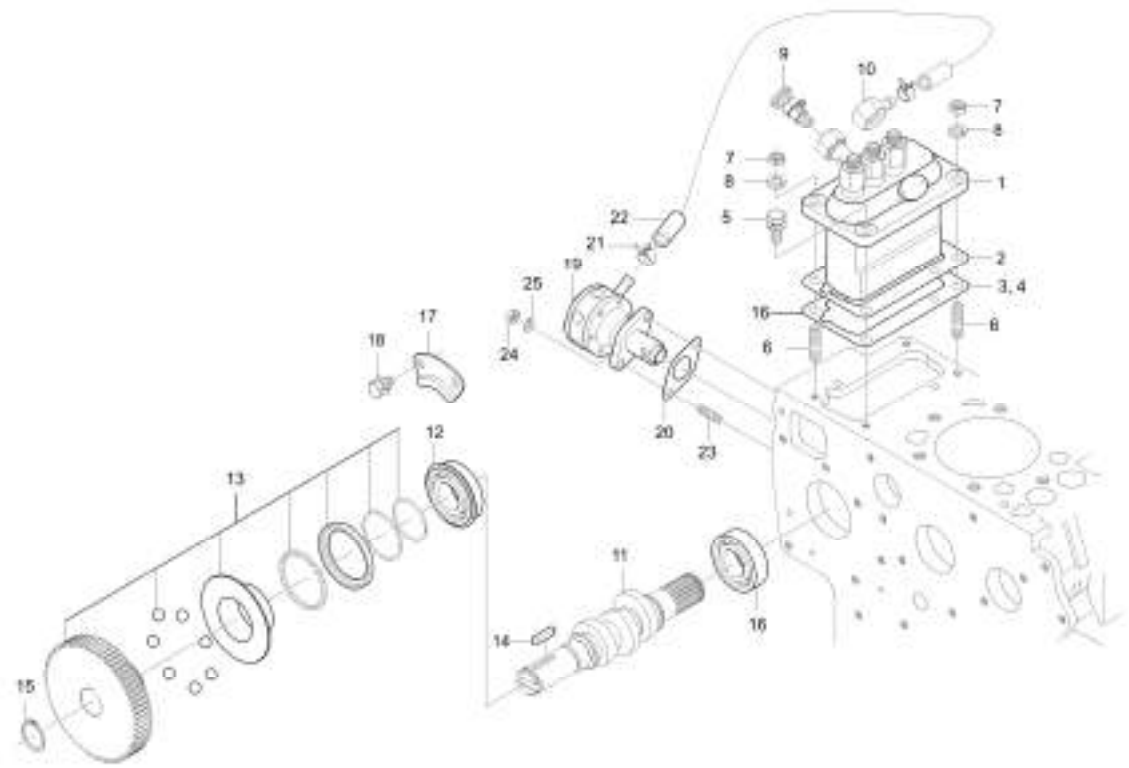

A : LK2554

No.	Part Number	Description	Qty A	Qty B	Qty C	Qty D	Qty E	I.C	Remark
1	15321-5101-3	333..ASSY PUMP,INJECTION v	1						
1	E5500-51012	INJECTION PUMP ASSY	1					<------	
2	E5500-52112	SHIM, INJECTION PUMP-0.15T dnr v	99						T0.15*80*103
3	E5500-52122	SHIM, INJECTION PUMP dnr v	99						T0.3
4	E5800-52111	SHIM 3, INJECTION PUMP v	99						
5	01123-50822	BOLT, WASHER	2						M8XP1.25
6	01513-50822	STUD	2						M8XP1.25
7	02156-50080	NUT	2						M8XP1.25
8	04512-50080	SPRING WASHER	2						M08
9	84612-6050-0	FUEL AIR BREATHER ASSY	1						
10	14111-4241-4	JOINT, FUEL HOSE	1						
10	E5500-42412	JOINT, FUEL HOSE obs v	1					<----->	
11	E5500-16172	SHAFT,FUEL CAM	1 ~ 923000999						900G
11	E5500-16173	CAMSHAFT, FUEL	1 023000001 ~					<--X-->	
12	08153-06205	BEARING,BALL	1						#6205NRC3
13	E6200-A0020	ASSY SLEEVE, GOVERNOR obs v	1						
13	E6200-A0021	GOVERNOR SLEEVE ASS'Y obs v	1					<----->	
14	05712-00525	KEY	1						7*7*29

----> Old replace New
<---- New replace Old
<-X-> Not interchangeable
<---> Interchangeable
<-O-> Interchangeable with another part(s)
* Please place an order assy(*)

https://tractormanualz.com/

TD1300-130

FUEL CAMSHAFT GROUP

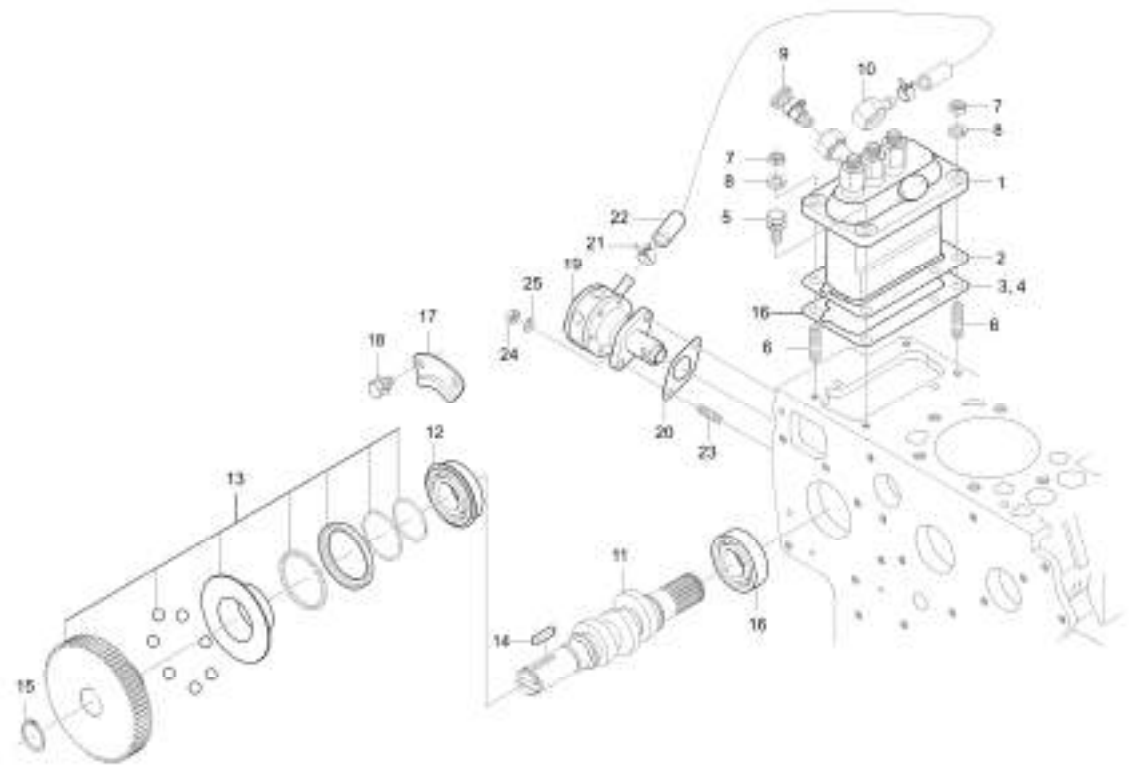

A : LK2554

No.	Part Number	Description	Qty A	Qty B	Qty C	Qty D	Qty E	I.C	Remark
15	04612-00240	SNAP RING	1						
16	08103-06205	BALL BEARING	1						6205C3
17	15221-1632-1	FUEL CAMSHAFT STOPPER	1						T2.5*62*35
18	01123-50814	BOLT, WASHER	2						M8XP1.25
19	15381-5203-0	FUEL PUMP ASSEMBLY	1						
20	15241-5214-1	GASKET	1						T0.5
20	E6200-52142	GASKET, FUEL PUMP	1					<------	t0.5
21	14301-4275-3	CLIP	2						스탠 # 1 6
21	14911-4275-1	CLIP, TUBE	2					<------	T0.8*#12
22	15471-4211-1	TUBE, FUEL obs v	1						
23	01513-50616	BOLT, STUD	2						DIA6*28
23	01513-50618	STUD	2					<------	M6*1.0
24	02056-50060	NUT	2						M6XP1.0
25	04512-50060	WASHER, SPRING	2						M06

----> Old replace New <---- New replace Old <-X-> Not interchangeable
<---> Interchangeable <-O-> Interchangeable with another part(s)
* Please place an order assy(*)

https://tractormanualz.com/

TD1300-135

GOVERNOR GROUP

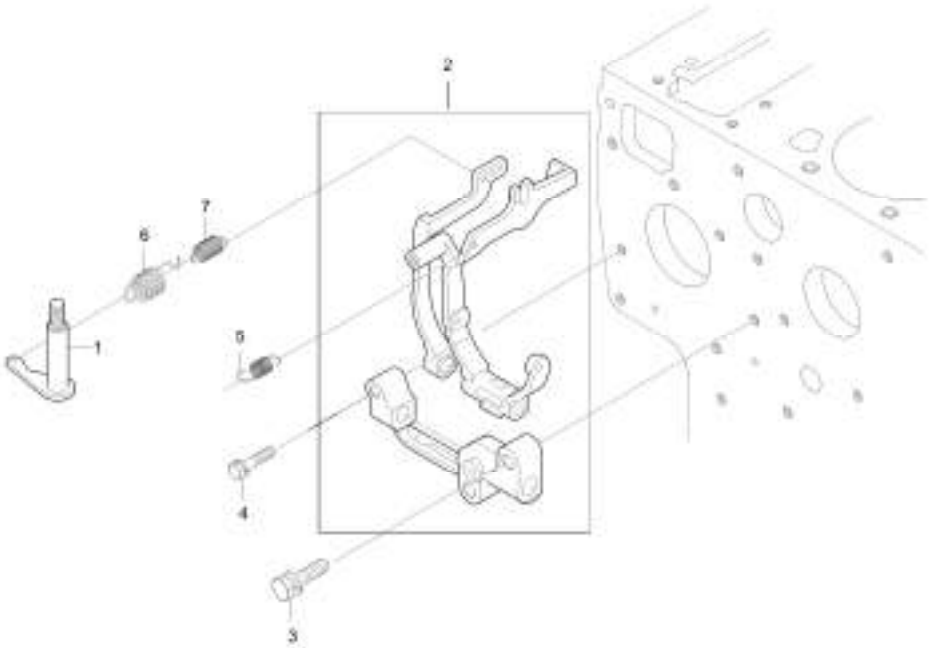

A : LK2554

No.	Part Number	Description	Qty A	Qty B	Qty C	Qty D	Qty E	I.C	Remark
1	15601-5602-1	ASSY LEVER,GOVERNOR	1						
2	15471-5605-2	ASSY LEVER,FORK	1						
2	E5900-56051	ASSY,FORK LEVER v	1					<------	
2	E5900-56052	FORK LEVER ASSEMBLY	1					<------	
3	01123-50832	BOLT, WASHER	2						HEX12*43
4	01023-50628	BOLT, WASHER	1						HEX10*38
5	15601-5648-1	SPRING, STARTER	1						DIA0.5
6	15521-5641-2	SPRING 1, GOVERNOR	1						DIA1.0
7	15521-5642-1	SPRING 2, GOVERNOR	1						DIA0.6

----> Old replace New
<---> Interchangeable
* Please place an order assy(*)
<---- New replace Old
<-O-> Interchangeable with another part(s)
<-X-> Not interchangeable

https://tractormanualz.com/

TD1300B-143

ENGINE STOP LEVER GROUP

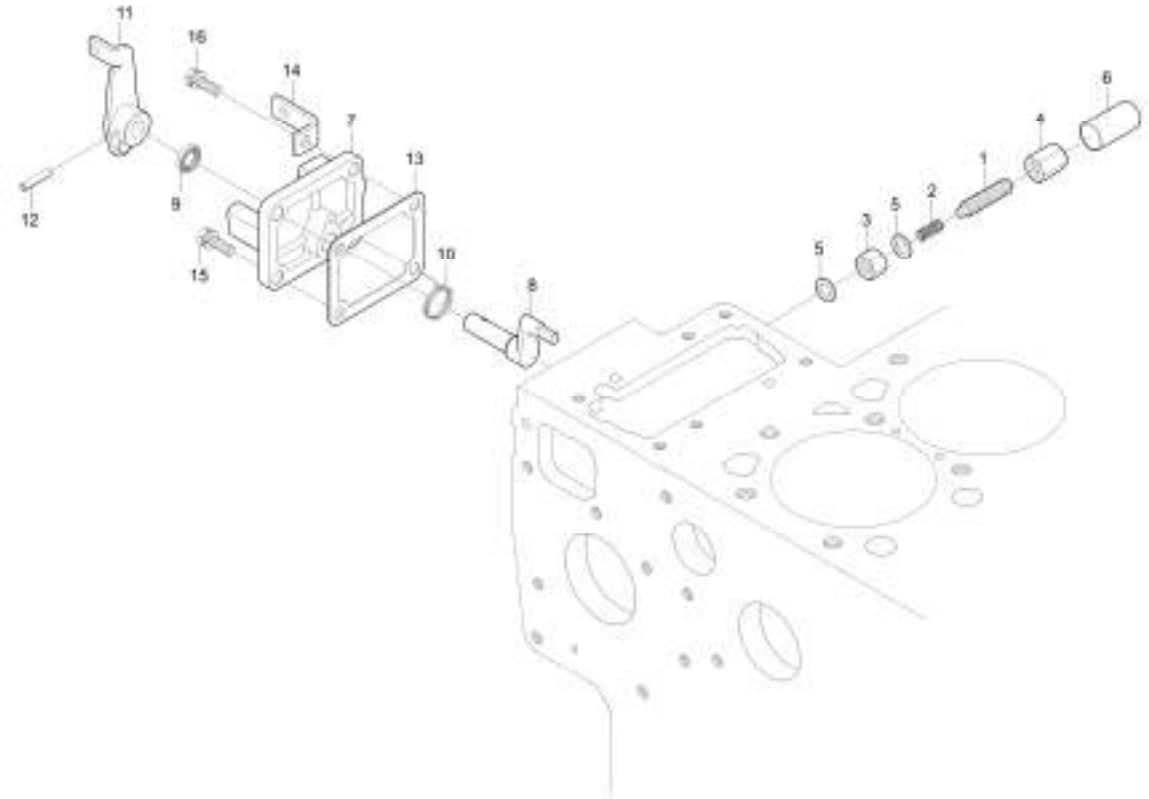

A : LK2554

No.	Part Number	Description	Qty A	Qty B	Qty C	Qty D	Qty E	I.C	Remark
1	15521-5425-1	BOLT, ADJUSTING	1						DIA10*43,M8*1.0
1	E5850-54251	IDEL ADJUSTING BOLT dnr v	1					<------	
2	15521-5426-1	SPRING	1						DIA0.5
3	15401-9201-1	NUT, FIXING	1						HEX13*15,M8*1.0
4	15521-9233-1	NUT, CAP obs v	1						HEX13*25,M8*1.0
5	15021-3366-1	GASKET	2						T1.5
6	15521-5427-1	CAP	1						DIA16*35,T0.5
7	E6200-51653	COVER INJECTION PUMP	1						
7	E6200-51654	COVER,INJECTION PUMP	1					<------	
8	15471-5774-1	SHAFT, LEVER	1						
8	E6200-57742	SHAFT, LEVER	1					<------	
8	E6200-57743	LEVER SHAFT	1					<------	
9	15471-5798-1	SEAL, OIL	1						
10	15471-5792-1	SPRING dnr v	1						DIA1.2
10	E6200-57922	SPRING	1					<------	
11	E6200-57731	LEVER,ENGINE STOP	1						
12	05411-00420	PIN, SPRING	1						DIA4.4XL20
13	15225-5166-1	GASKET	1						T1*72*57*

----> Old replace New <---- New replace Old <-X-> Not interchangeable
<---> Interchangeable <-O-> Interchangeable with another part(s)
* Please place an order assy(*)

https://tractormanualz.com/

TD1300B-143

ENGINE STOP LEVER GROUP

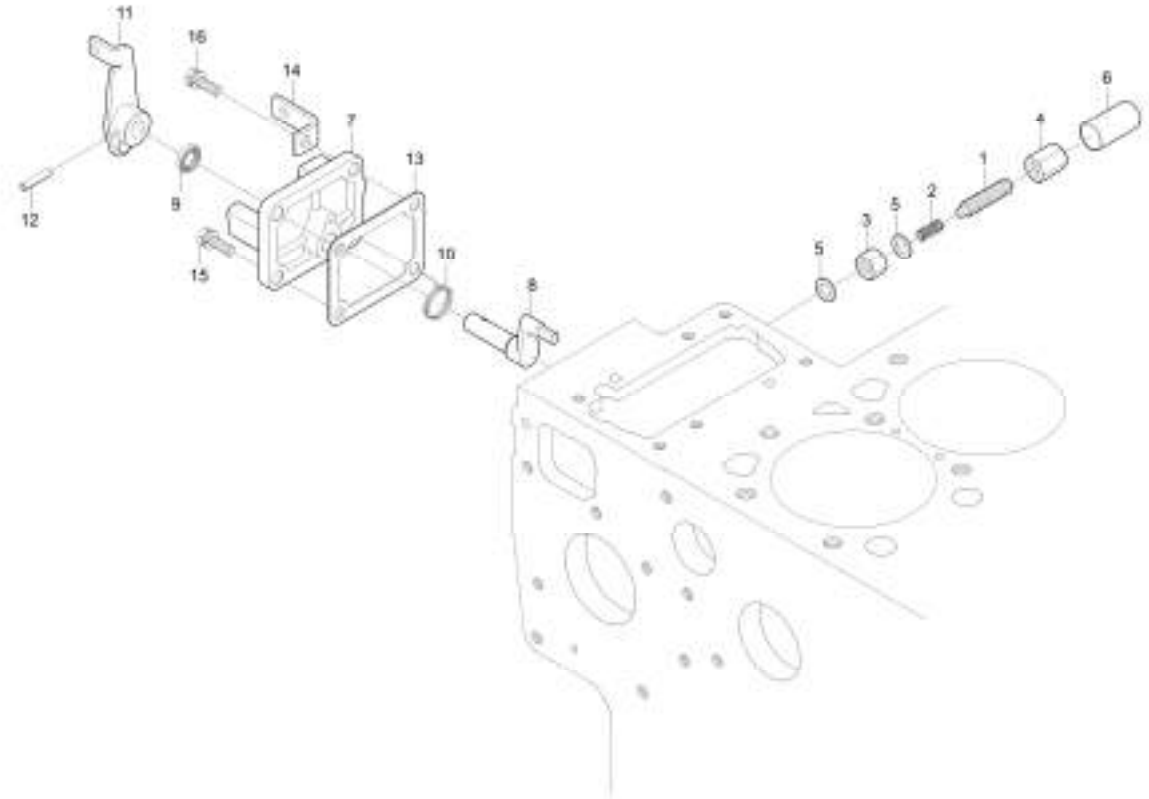

A : LK2554

No.	Part Number	Description	Qty A	Qty B	Qty C	Qty D	Qty E	I.C	Remark
13	E5500-51662	GASKET v	1					<------	t1.0
14	E5205-57482	HOLDER,WIRE	1						T2.8*55*20
15	01023-50620	BOLT, WASHER	4						M6XP1.0
15	01754-50616	BOLT, FLANGE	3 123000001 ~					<----->	M6XP1.0
16	01754-50620	BOLT, FLANGE	1						M6XP1.0

----> Old replace New
<---- New replace Old
<-X-> Not interchangeable
<---> Interchangeable
<-O-> Interchangeable with another part(s)
* Please place an order assy(*)

https://tractormanualz.com/

TD1400-150

SPEED CONTROL LEVER GROUP

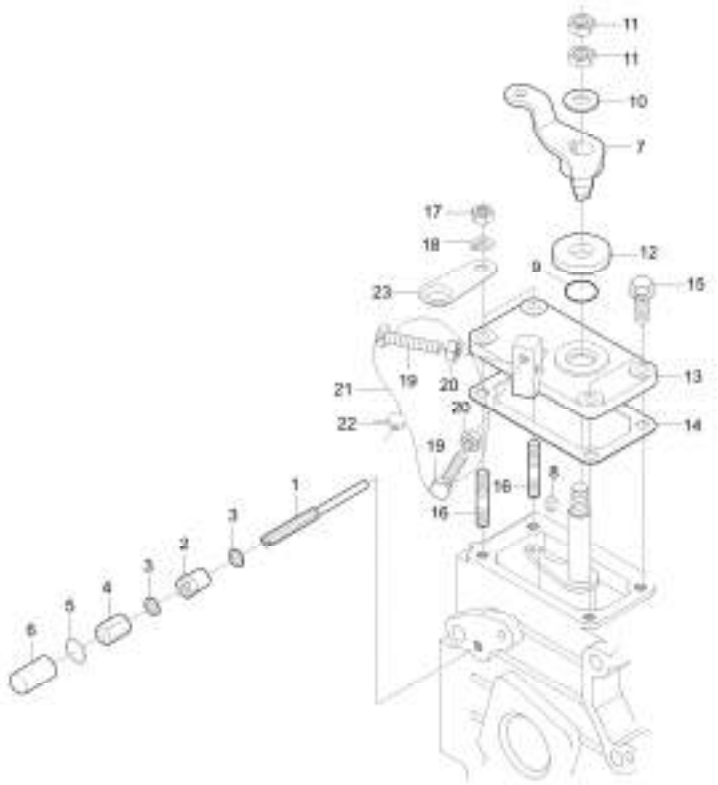

A : LK2554

No.	Part Number	Description	Qty A	Qty B	Qty C	Qty D	Qty E	I.C	Remark
1	15601-5412-1	BOLT, FUEL ADJUSTING	1						M6*1.0
1	E6301-54122	BOLT, FUEL ADJUSTING	1					<----->	
2	15601-9201-1	NUT, FIXING	1 ~ 123000200						HEX10,M6*1.0
2	E6305-92021	NUT	1 323000001 ~					<--X-->	
3	15601-9665-1	GASKET	2 ~ 123000200						T1.0
3	E6305-96651	GASKET	2 323000001 ~					<--X-->	D=9.8,T=1.0
3	E6305-96652	GASKET	2					<------	D=9.8,T=1.0
4	15601-5422-1	CAP NUT	1 ~ 123000200						HEX10,M6*1.0
4	E6305-54221	CAP NUT	1 323000001 ~					<--X-->	
5	E6305-54281	SNAP RING	1						D=0.8
6	15601-5442-2	CAP obs v	1 ~ 123000200						T0.5
6	E6305-54421	CAP	1 323000001 ~					<--X-->	D=12,T=1.0
7	E5500-57151	LEVER,SPEED CONTROL	1						
7	E5610-57151	LEVER,SPEED CONTROL	1					<------	
8	05712-00408	KEY	1						5*5*12
9	04811-00120	O RING	1						DIA11.8
10	04013-50080	WASHER	1						
11	02112-50080	NUT	2						M8*P1.25

----> Old replace New
<---> Interchangeable
* Please place an order assy(*)
<---- New replace Old
<-O-> Interchangeable with another part(s)
<-X-> Not interchangeable

https://tractormanualz.com/

TD1400-150

SPEED CONTROL LEVER GROUP

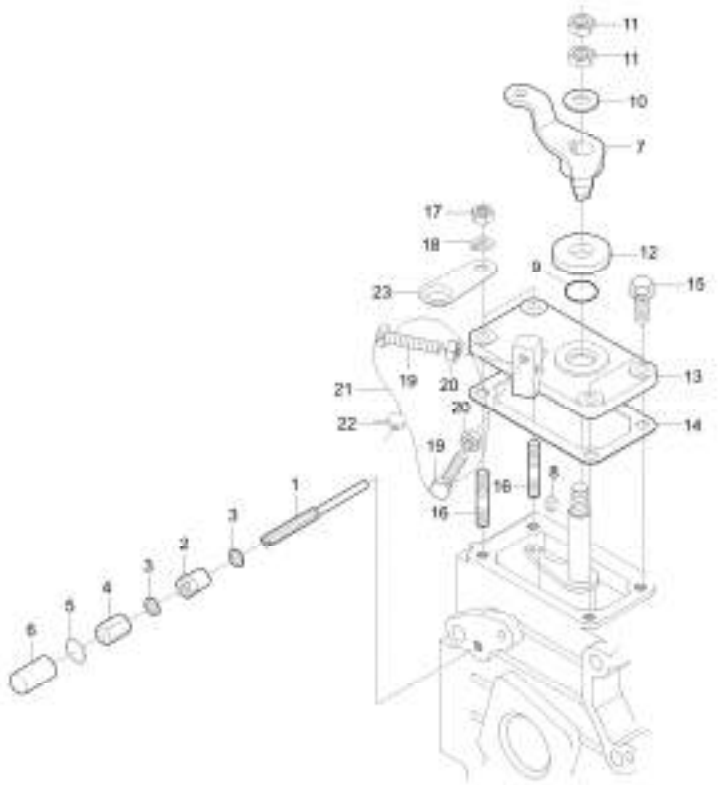

A : LK2554

No.	Part Number	Description	Qty A	Qty B	Qty C	Qty D	Qty E	I.C	Remark
12	17011-5738-3	PLATE, FRICTION	1						DIA30*10,T5.0
12	E5500-57382	LEVER, SPEED CONTROL-FRICTION PLATE	1					<------	t5
13	15521-5711-3	PLATE, SPEED CONTROL	1						100G
14	15221-5721-1	GASKET	1						T1.0*96*54
14	E5500-57212	GASKET, SPEED CONTROL PLATE	1					<------	t1.0
15	01023-50620	BOLT, WASHER	2						M6XP1.0
16	01518-50622	STUD	2						
17	02056-50060	NUT	2						M6XP1.0
18	04512-50060	WASHER, SPRING	2						M06
19	15108-5728-4	STOPPER	2						HEX10,M6*1.0
20	02056-50060	NUT	2						M6XP1.0
21	07811-11210	WIRE obs v	1						DIA1.2*110
21	07811-10820	WIRE	1					<------	
22	07918-00001	LEAD, SEALING	1						
23	E5900-72732	CLAMP, HOSE	1						T0.8

----> Old replace New
<---- New replace Old
<-X-> Not interchangeable
<---> Interchangeable
<-O-> Interchangeable with another part(s)
* Please place an order assy(*)

https://tractormanualz.com/

TD1300B-160

WATER HOSE GROUP

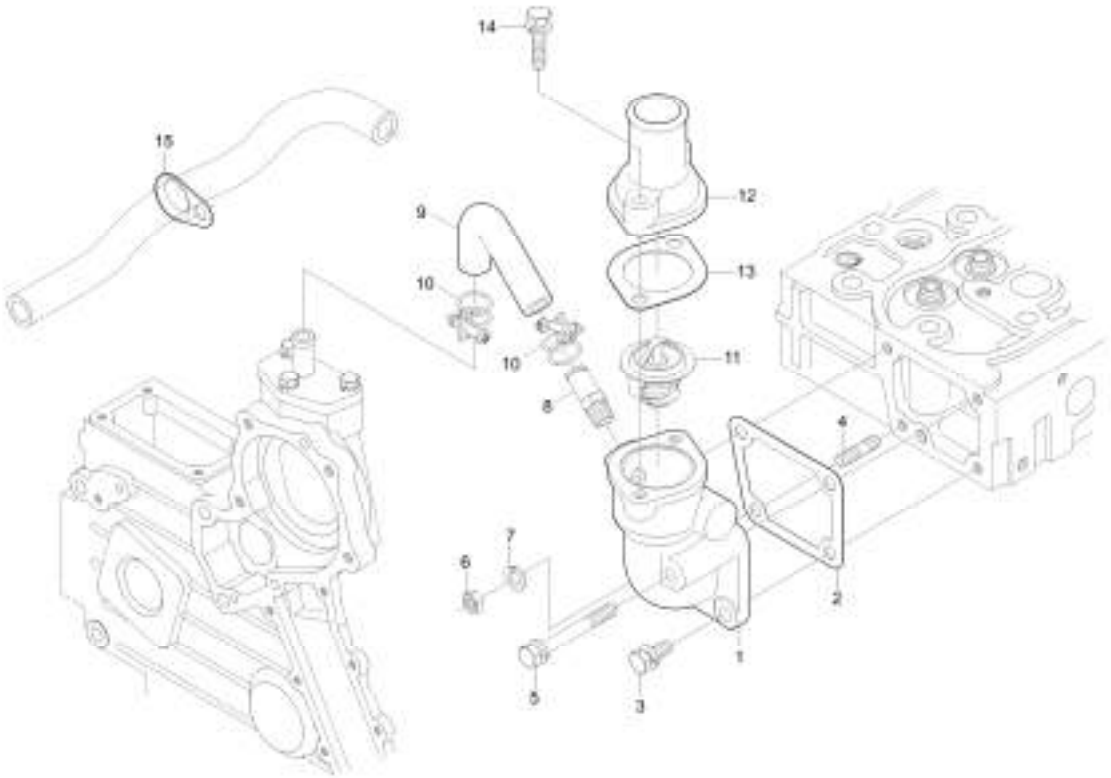

A : LK2554

No.	Part Number	Description	Qty A	Qty B	Qty C	Qty D	Qty E	I.C	Remark
1	15521-7291-1	FLANGE, COOLING WATER	1						1.35KG
1	E5500-72912	WATER FLANGE v	1					<----->	
1	E5500-72913	FLANGE, WATER v	1					<----->	
2	15525-7292-1	GASKET,WATER FLANGE	1						T0.5*166*72
3	01123-50822	BOLT, WASHER	2						M8XP1.25
4	01513-50822	STUD	1						M8XP1.25
5	01123-50870	WITH_WASHER_BOLT	1						M8XP1.25
6	02156-50080	NUT	1						M8XP1.25
7	04512-50080	SPRING WASHER	1						M08
8	15321-7334-1	PIPE, WATER RETURN	1						DIA14*39,PT 1/4
8	E5500-73342	HOSE, WATER RETURN v	1					<----->	
9	15521-7334-1	TUBE	1						OD19*ID12* 90
10	15109-7336-4	CLAMP, HOSE obs v	2						철 사19#
11	E5500-73012	THERMOSTAT	1						
12	15325-7327-1	DO NOT USE	1						60*82*T1.0
13	E5500-73262	COVER,THERMOSTAT v	1						
13	E5500-73263	COVER, THERMOSTAT	1					<----->	
14	01123-50835	BOLT, WITH WASHER	2						M8XP1.25

----> Old replace New
<---- New replace Old
<-X-> Not interchangeable
<---> Interchangeable
<-O-> Interchangeable with another part(s)
* Please place an order assy(*)

https://tractormanualz.com/

TD1300B-160

WATER HOSE GROUP

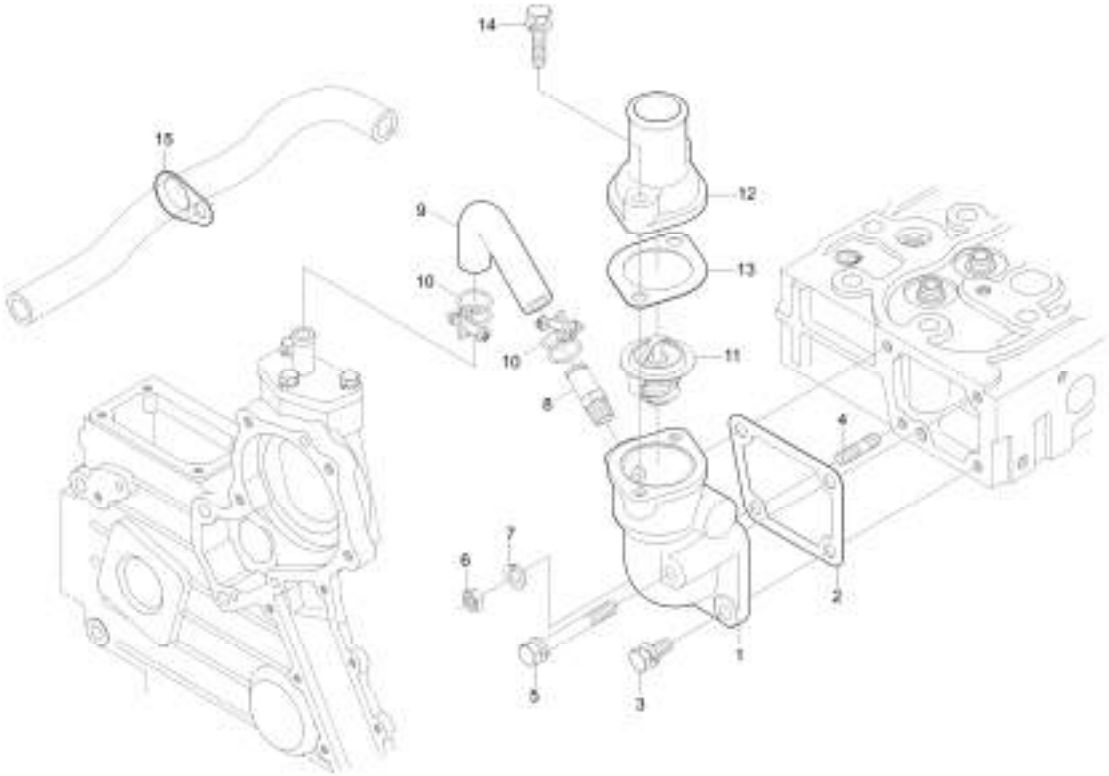

A : LK2554

No.	Part Number	Description	Qty A	Qty B	Qty C	Qty D	Qty E	I.C	Remark
15	15521-7314-1	CLAMP, PIPE	1						T1.2*32*52
15	E5500-73142	CLAMP, HOSE	1					<----->	T1.2

----> Old replace New
<---> Interchangeable
* Please place an order assy(*)
<---- New replace Old
<-O-> Interchangeable with another part(s)
<-X-> Not interchangeable

https://tractormanualz.com/

TD1300B-170

WATER PUMP GROUP

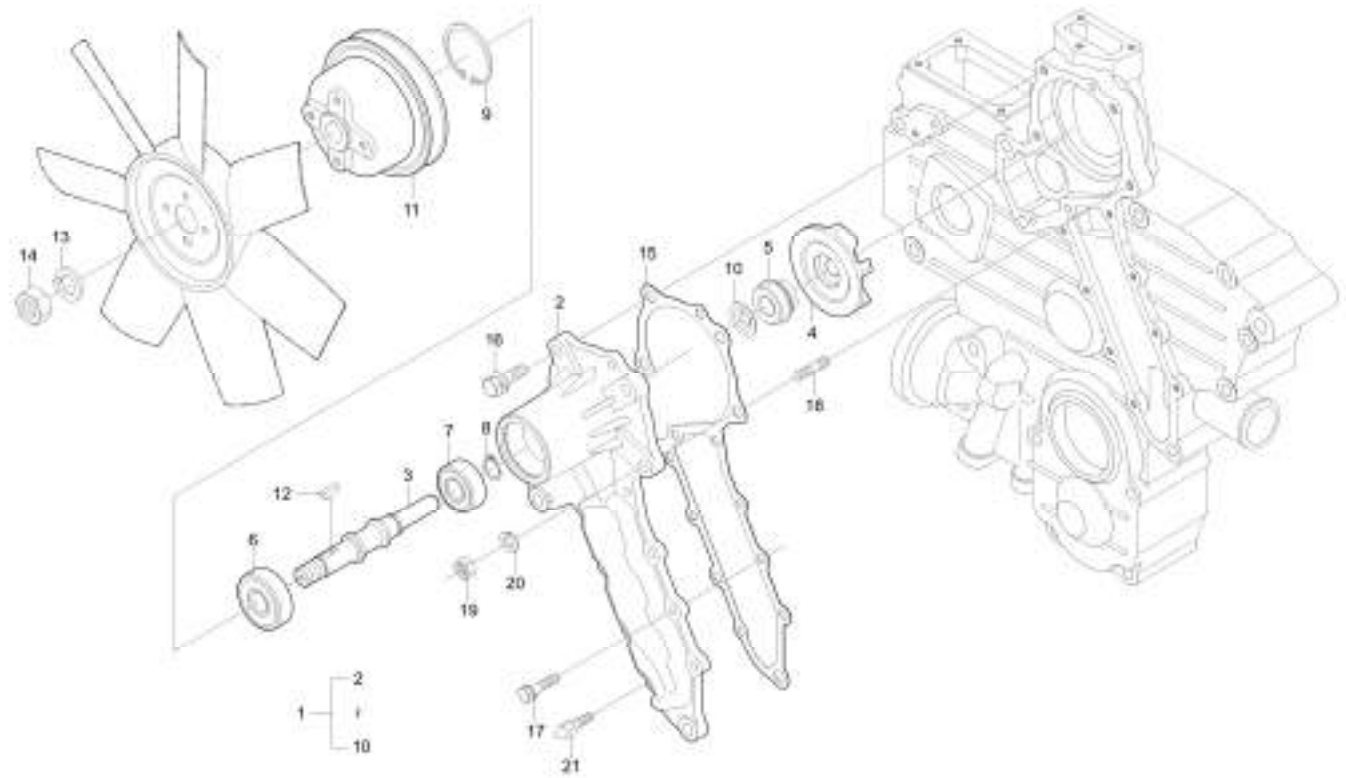

A : LK2554

No.	Part Number	Description	Qty A	Qty B	Qty C	Qty D	Qty E	I.C	Remark
1	15301-7303-0	WATER PUMP ASSY	1						
1	E5900-73031	WATER PUMP ASSY USE E5900-73032	1					<----->	
1	E5900-73032	WATER PUMP ASSY v	1					<------	
2	15521-7341-1	BODY, WATER PUMP obs v	1						650G
2	E5900-73411	BODY,WATER PUMP obs v	1 ~ 123000999					<----->	
2	E5900-73412	BODY,WATER PUMP v	1 323000001 ~					<--O-->	
3	15321-7348-1	SHAFT, WATER PUMP	1						DIA22*135
4	15321-7351-1	IMPELLER	1 ~ 123000999						200G
4	E5500-73512	IMPELLAR	1 323000001 ~					<--O-->	
5	15121-7305-7	SEAL ASSY dnr v	1 ~ 123000999						
5	E5800-73052	MECHANICAL SEAL ASSY v	1 323000001 ~					<--O-->	
6	08143-06302	BEARING,BALL	1						#6302UUC3
7	08143-06202	BEARING,BALL	1						#6202UUC3
8	04612-00150	SNAP RING	1						DIA15
9	04611-00420	SNAP RING	1						
10	10231-7362-1	SLINGER	1						T0.6*30*30
11	15321-7425-2	FAN PULLEY dnr v	1						
11	E5500-74252	FAN PULLEY obs v	1					<------	

----> Old replace New
<---- New replace Old
<-X-> Not interchangeable
<---> Interchangeable
<-O-> Interchangeable with another part(s)
* Please place an order assy(*)

https://tractormanualz.com/

TD1300B-170

WATER PUMP GROUP

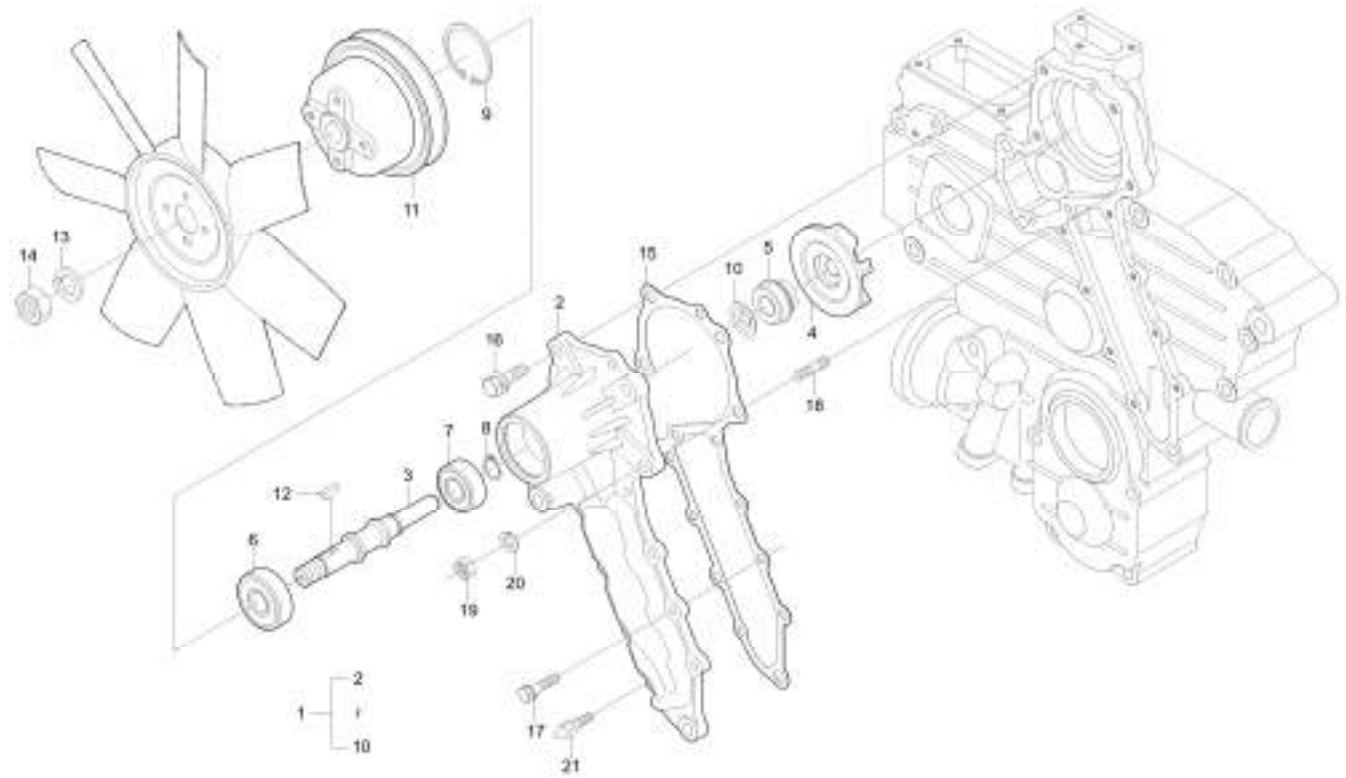

A : LK2554

No.	Part Number	Description	Qty A	Qty B	Qty C	Qty D	Qty E	I.C	Remark
12	05811-00416	KEY,WOODRUFF	1						DIA18*9
13	04512-50140	SPRING_WASHER	1						M14
14	02076-50140	NUT v	1						M14XP1.5
15	15525-7343-1	GASKET, WATER PUMP	1						T0.5*290*180
15	E5500-73432	GASKET	1					<------	t0.5
16	01123-50828	BOLT	2						
17	01023-50618	BOLT, WASHER	8						M6XP1.0
18	01518-50822	STUD	2						
19	02156-50080	NUT	2						M8XP1.25
20	04512-50080	SPRING WASHER	2						M08
21	E6201-50618	BOLT,TIMING	1						
21	E6201-50619	TIMING BOLT	1					<------	

----> Old replace New
<---- New replace Old
<-X-> Not interchangeable
<---> Interchangeable
<-O-> Interchangeable with another part(s)
* Please place an order assy(*)

https://tractormanualz.com/

TD1400-190

ALTERNATOR GROUP

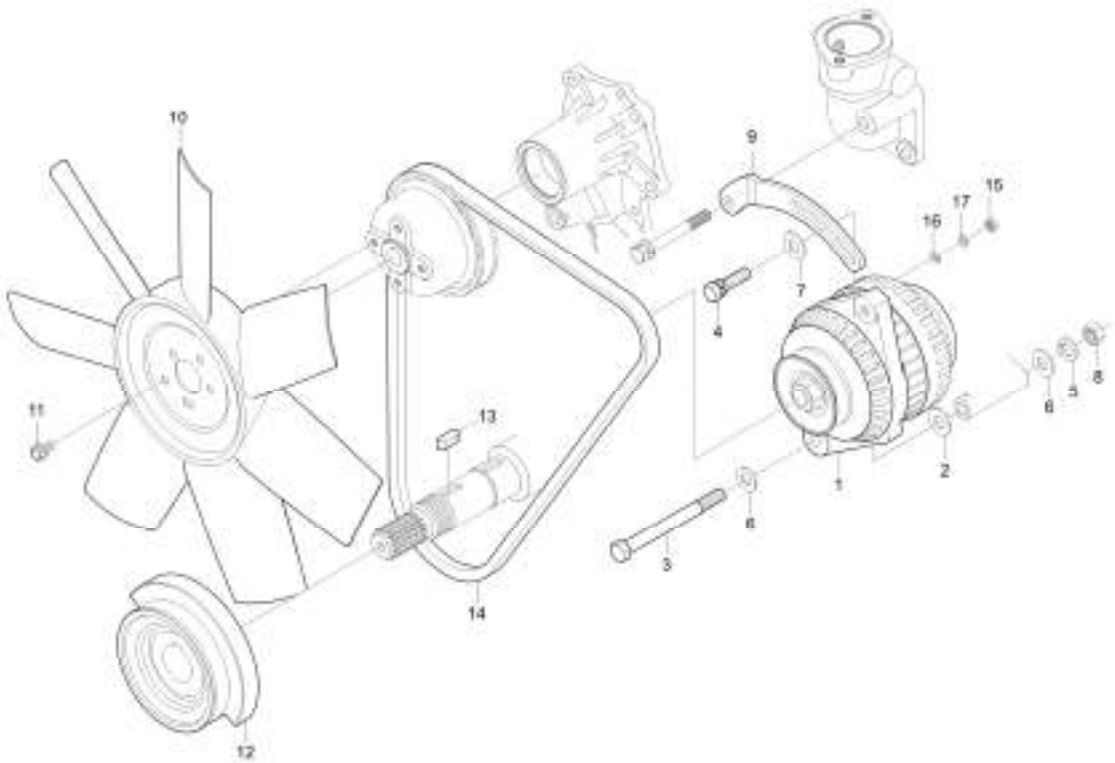

A : LK2554

No.	Part Number	Description	Qty A	Qty B	Qty C	Qty D	Qty E	I.C	Remark
1	15321-6401-2	DYNAMO ASSY {DNU} USE E5500-64012	1						12V
1	E5500-64012	ASSY,DYNAMO v	1 823000001 ~ 923000999					<------	
1	E6213-64011	ASS'Y, DYNAMO	1 023000001 ~					<--X-->	
1	E6213-64012	ALTERNATOR ASSY	1 323000001 ~					<------	
2	E5800-64102	COLLAR dnr v	1						DIA24*T5.15
3	01173-51000	BOLT	1 023000001 ~ 123000200						M10*P1.25*100
3	01173-51005	BOLT	1 323000001 ~					<--X-->	
4	01123-50830	BOLT, WASHER	1 023000001 ~ 123000200						M8P1.25*30
4	01123-50832	BOLT, WASHER	1 323000001 ~					<--X-->	HEX12*43
5	04512-50100	WASHER, SPRING v	1						M10
6	04012-50100	WASHER, PLAIN	1 823000001 ~						
6	04013-50100	PLAIN_WASHER	1 323000001 ~					<------	M10
7	04015-50080	WASHER, PLAIN	1						M8
8	02176-50100	NUT v	1						M10XP1.25
9	15321-6442-2	SUPPORT	1						T4.5
9	E5500-64422	STAY,ALTERNATOR v	1					<------	t4.5
10	15521-7411-1	FAN, COOLING	1						
11	01053-50610	BOLT	4						

----> Old replace New
<---- New replace Old
<-X-> Not interchangeable
<---> Interchangeable
<-O-> Interchangeable with another part(s)
* Please place an order assy(*)

https://tractormanualz.com/

TD1400-190

ALTERNATOR GROUP

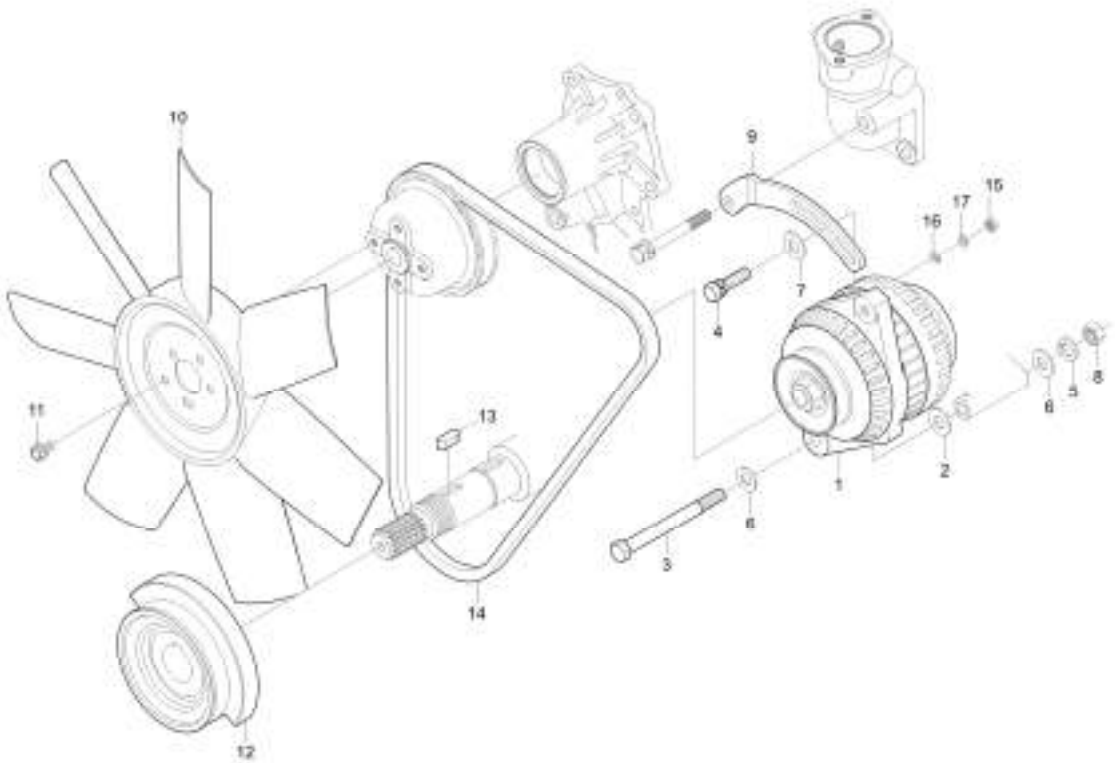

A : LK2554

No.	Part Number	Description	Qty A	Qty B	Qty C	Qty D	Qty E	I.C	Remark
11	01754-50612	BOLT, FLANGE	4 023000001 ~					<------	M6XP1.0
12	E5500-74283	PULLEY,PAN DRIVE	1						
12	E5500-74284	PULLEY,PAN DRIVE v	1					<------	
12	E5500-74285	PULLEY,FAN DRIVING v	1					<------	
12	E5500-74286	PULLEY,FAN DRIVING v	1					<----->	
12	E5500-74287	PULLEY, FAN DRIVE	1					<------	
13	05712-00720	KEY	1						W7XL20
14	E5405-72531	BELT	1						
15	02054-50050	NUT	1						M5*P1.0
16	04012-50050	WASHER, PLAIN	1						M5
17	04512-50050	WASHER, SPRING	1						M5

----> Old replace New
<---> Interchangeable
* Please place an order assy(*)
<---- New replace Old
<-O-> Interchangeable with another part(s)
<-X-> Not interchangeable

https://tractormanualz.com/

TD1400-220

RADIATOR GROUP

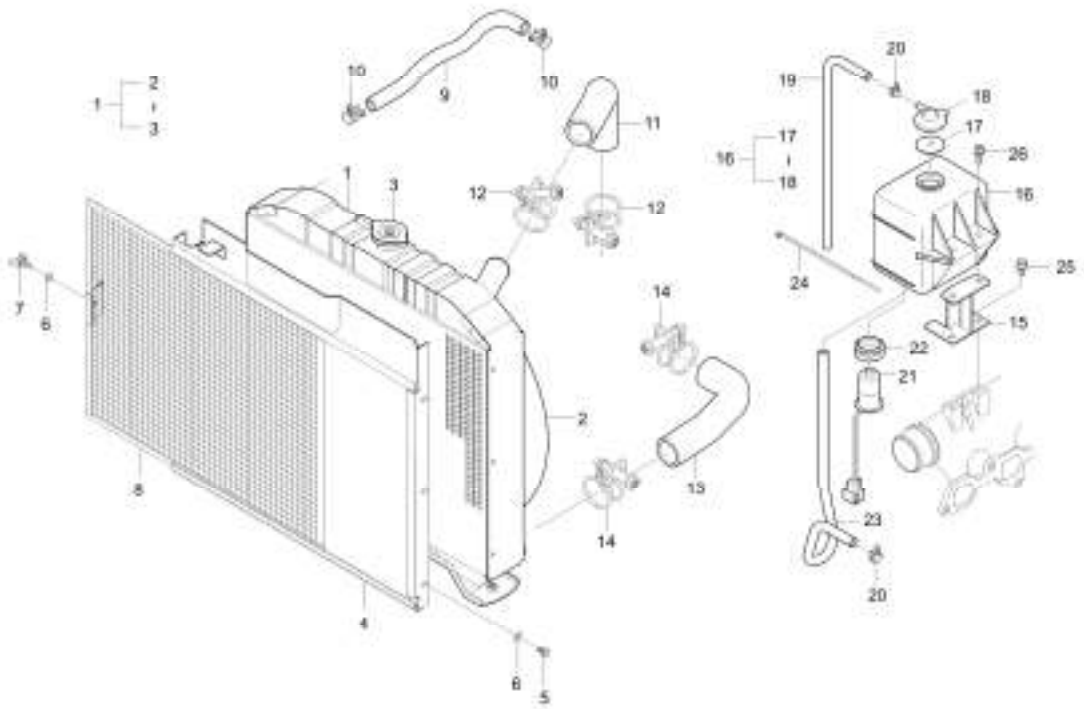

A : LK2554

No.	Part Number	Description	Qty A	Qty B	Qty C	Qty D	Qty E	I.C	Remark
1	T2540-72061	ASSY RADIATOR	1						
2	T2540-72331	SHROUD,FAN	1						
3	E6200-72631	ASS'Y CAP dnr v	1						
4	T2540-17711	GUIDE,NET	1						
5	01023-50612	BOLT, WASHER v	5						M6XP1.0
6	04013-50060	WASHER, PLAIN	6						M6
7	01811-50612	BOLT, WING	1						M6P1.0
8	T2540-17721GY	NET,RADIATOR	1						
9	T2540-73341	HOSE, WATER RETURN v	1						
10	15109-7336-4	CLAMP, HOSE obs v	2						철 사19#
10	E5700-73361	BAND, HOSE obs v	2					<------	
11	T2540-72941	HOSE, WATER (UPPER) v	1						
11	T2540-72942	HOSE WATER UPPER	1					<------	
12	15108-7287-3	BAND	2						철 사45#
13	T2540-72851	HOSE, WATER (LOW)	1						
14	15108-7287-3	BAND	2						철 사45#
15	15301-7246-0	HOLDER, WATER TANK	1						
15	E6300-72462	HOLDER, RESERVE TANK	1 423000001 ~					<------	

----> Old replace New
<---> Interchangeable
* Please place an order assy(*)
<---- New replace Old
<-O-> Interchangeable with another part(s)
<-X-> Not interchangeable

https://tractormanualz.com/

TD1400-220

RADIATOR GROUP

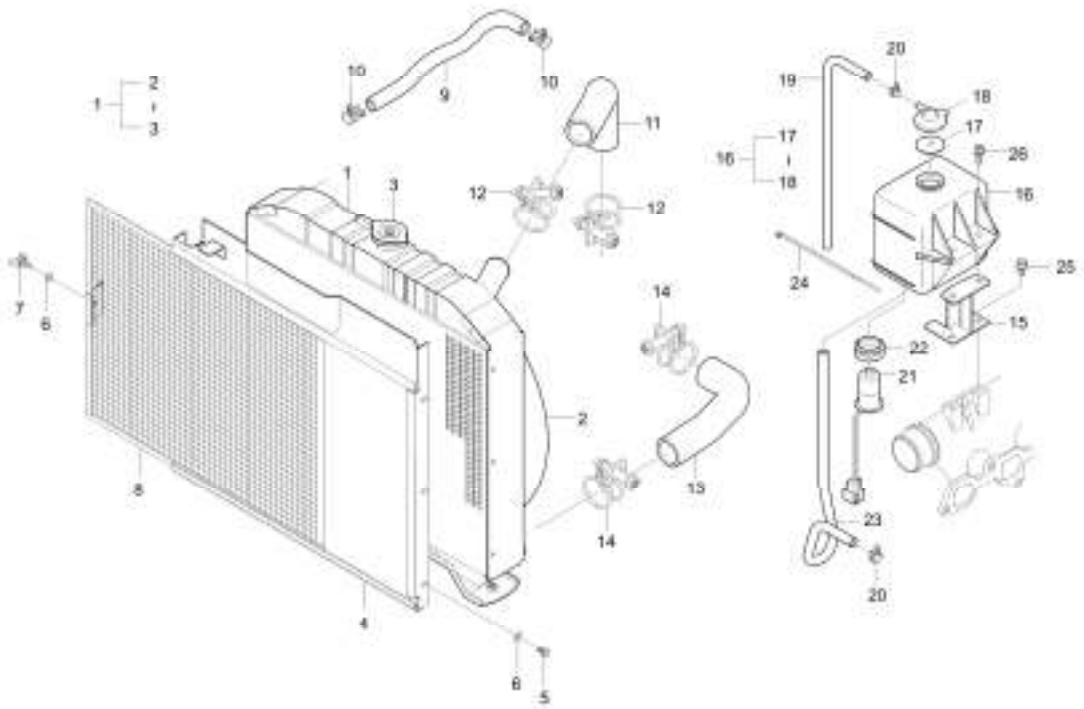

A : LK2554

No.	Part Number	Description	Qty A	Qty B	Qty C	Qty D	Qty E	I.C	Remark
16	T4340-A0110	WATER TANK ASSY dnr v	1						
16	T4710-B03000101	ASSISTANCE WATER TANK ASSEMBLY	1					<------	
17	15301-7249-0	RUBBER PLATE	1						
18	15301-7242-0	CAP, WATER TANK v	1						
19	15301-7244-0	TUBE, OVER FLOW	1						
20	15301-7247-0	CLIP, TUBE	2						스탠16#
21	15521-7299-2	SWITCH WATER obs v	1						
22	15301-7245-0	RUBBER HOLDER	1						
23	E6200-72711	HOSE 1, OVER FLOW	1						
24	T4520-82561	BAND, CORD	2						L200
25	01123-50816	Hex Head Cap Screw	2						M8XP1.25
26	01202-50820	BOLT v	2						

----> Old replace New <---- New replace Old <-X-> Not interchangeable
<---> Interchangeable <-O-> Interchangeable with another part(s)
* Please place an order assy(*)

https://tractormanualz.com/

T220F-T010A

BRAKE CASE GROUP

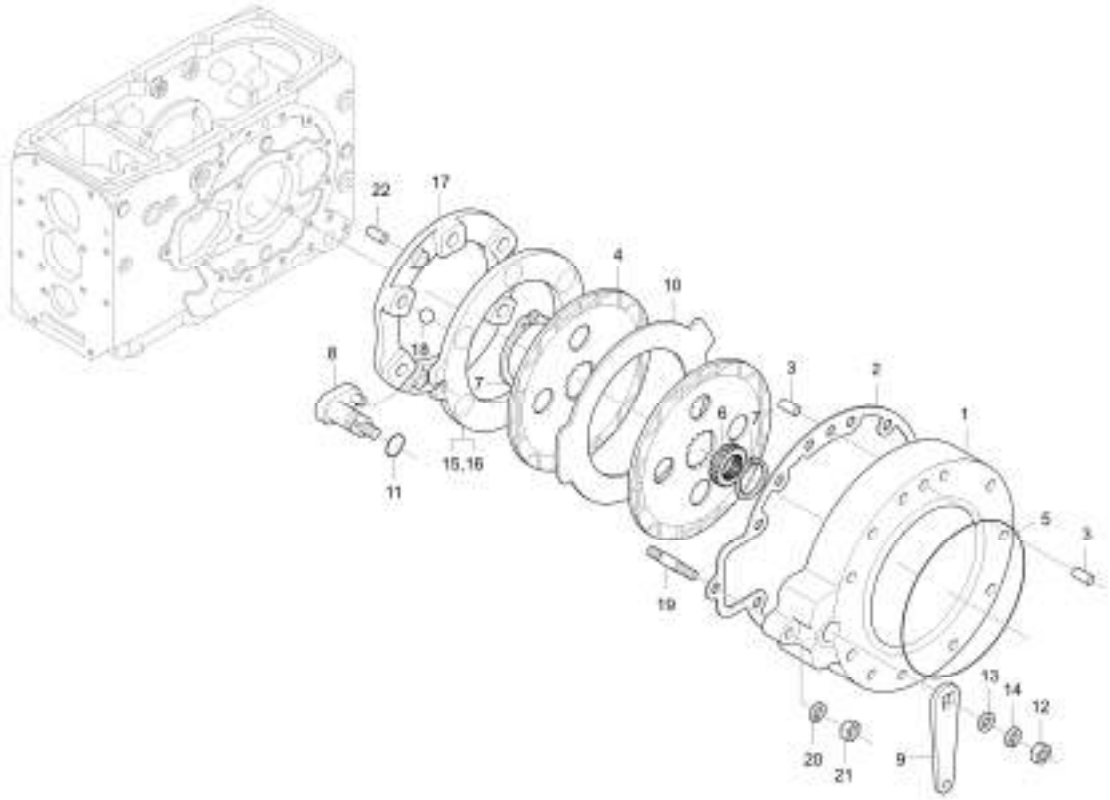

A : LK2554

No.	Part Number	Description	Qty A	Qty B	Qty C	Qty D	Qty E	I.C	Remark
1	T2242-28151	CASE, BRAKE	2						
2	37260-2816-2	PACKING	2						T0.5
3	37150-2737-1	PIN, PARALLEL	4						DIA11*21
4	T2440-28202	DISK,BRAKE v	4						
5	37150-2818-2	O RING	2						
6	37650-2819-0	BOSS, SPLINE	2						450G
7	04612-00450	SNAP RING	4						DIA45
8	38435-2821-2	CAM,BRAKE	2						
8	38435-2821-3	CAM, BRAKE	2					<------	
9	37720-2822-1	LEVER, BRAKE CAM	2						T9.0*172*45
10	T2440-28182	PLATE	2						T2.6
11	04811-00220	O RING	4						DIA21.8
12	02174-50140	NUT	2						M14*P1.5
13	04013-50140	WASHER, PLAIN	2						M14
14	04512-50140	SPRING_WASHER	2						M14
15	37150-2824-6	PLATE, CAM LH	1						
15	T2240-28242	PLATE, CAM LH	1					<------	
16	37150-2827-5	PLATE, CAM RH	1						

----> Old replace New <---- New replace Old <-X-> Not interchangeable
<---> Interchangeable <-O-> Interchangeable with another part(s)
* Please place an order assy(*)

https://tractormanualz.com/

T220F-T010A

BRAKE CASE GROUP

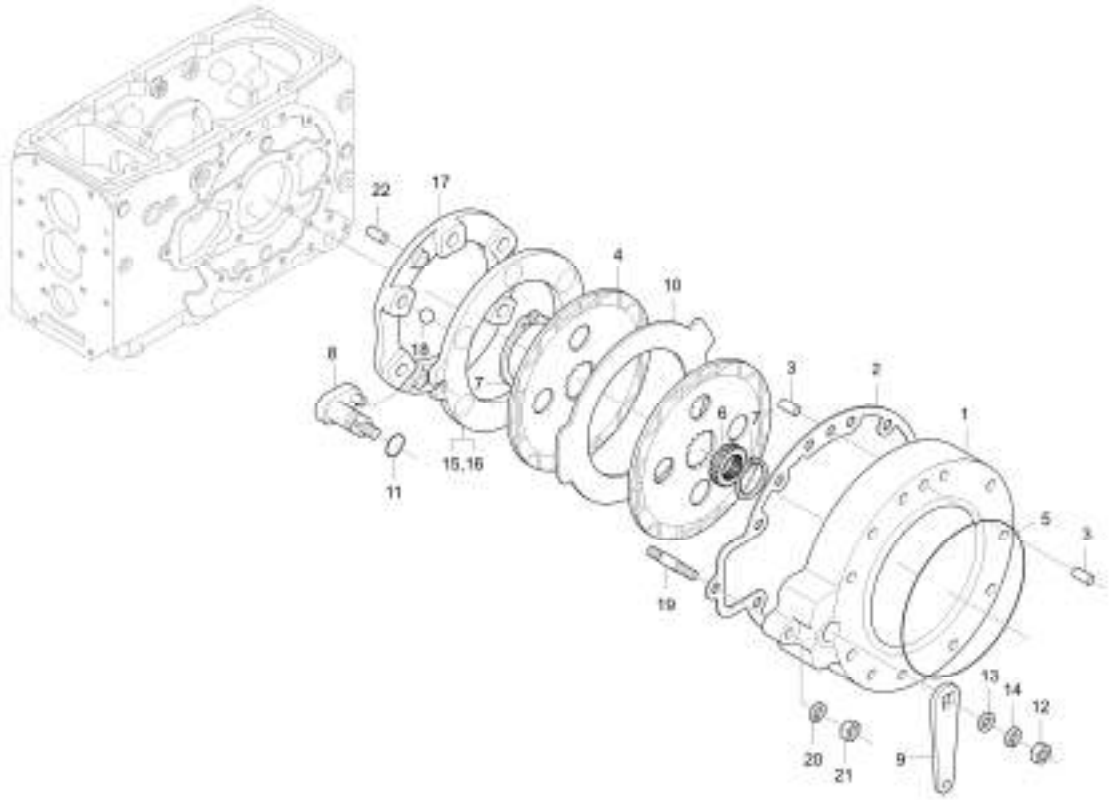

A : LK2554

No.	Part Number	Description	Qty A	Qty B	Qty C	Qty D	Qty E	I.C	Remark
16	T2240-28272	PLATE, CAM RH	1					<------	
17	T2440-26572	GUIDE, BALL	2						2.1KG
18	07715-00805	BALL,STEEL v	12						DIA15.875
19	T2242-27341	STUD	2						
19	T2242-27342	STUD	2					<------	
20	04512-50120	SPRING_WASHER v	2						M12
21	02176-50120	NUT	2						M12XP1.25
22	37805-4350-1	PIN, PARALLEL	4						

----> Old replace New
<---> Interchangeable
* Please place an order assy(*)
<---- New replace Old
<-O-> Interchangeable with another part(s)
<-X-> Not interchangeable

https://tractormanualz.com/

L2203-T030A

CLUTCH GROUP

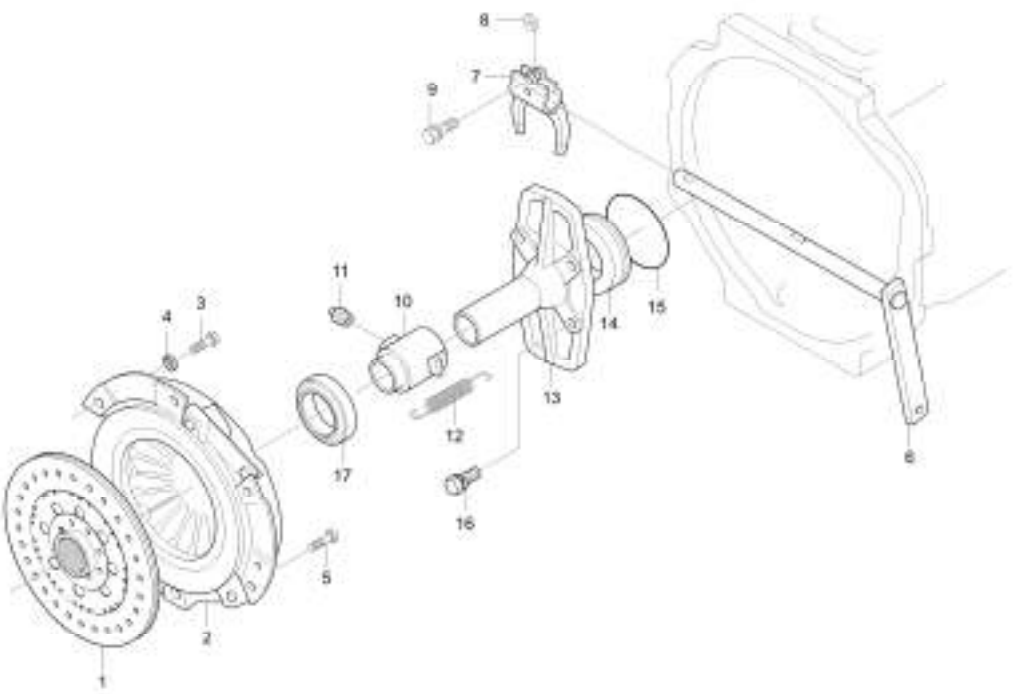

A : LK2554

No.	Part Number	Description	Qty A	Qty B	Qty C	Qty D	Qty E	I.C	Remark
1	38245-1430-1	CLUTCH DISK ASSY	1						
1	38245-1430-2	CLUTCH DISK ASSY	1 323000001 ~					<------	
2	37300-1450-1	CLUTCH PRESSURE PLATE ASSY	1						
3	34220-1451-2	REAMER BOLT	2						
4	04512-50080	SPRING WASHER	2						M08
5	01123-50816	Hex Head Cap Screw	4						M8XP1.25
6	37220-1471-4	LEVER, CLUTCH	1						
6	T2240-14712	LEVER CLUTCH v	1					<----->	
7	31150-1472-7	FORK, CLUTCH RELEASE	1						300G
8	31150-1478-4	KEY, FORK	1						DIA21
8	T2280-14781	FORK KEY v	1					<----->	
9	01123-50825	WITH_WASHER_BOLT	1						M8XP1.25
10	38430-1483-1	HUB, RELEASE BEARING	1						750G
11	06613-10010	Nipple Grease Fitting, PT1/8"	1						PT1/8
12	34150-1484-2	SPRING	1						DIA1.4
13	37150-1541-2	CASE, PROPELLAR SHAFT	1						420G
14	37150-1542-2	SPACER	1						
15	04811-50650	O RING	1						

----> Old replace New
<---- New replace Old
<-X-> Not interchangeable
<---> Interchangeable
<-O-> Interchangeable with another part(s)
* Please place an order assy(*)

https://tractormanualz.com/

L2203-T030A

CLUTCH GROUP

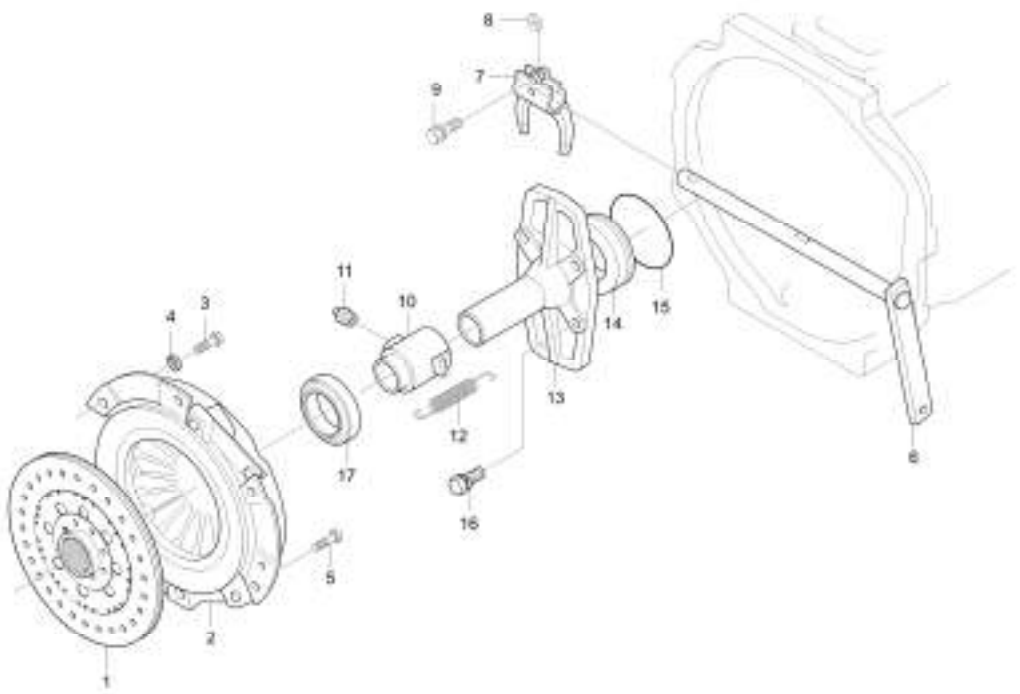

A : LK2554

No.	Part Number	Description	Qty A	Qty B	Qty C	Qty D	Qty E	I.C	Remark
16	01123-50832	BOLT, WASHER	4						HEX12*43
17	08490-00001	BEARING, THRUST BALL	1						KOYO,RCT45-1S

----> Old replace New
<----> Interchangeable
* Please place an order assy(*)
<---- New replace Old
<-O-> Interchangeable with another part(s)
<-X-> Not interchangeable

https://tractormanualz.com/

T260F-T210A

PROPER SHAFT GROUP

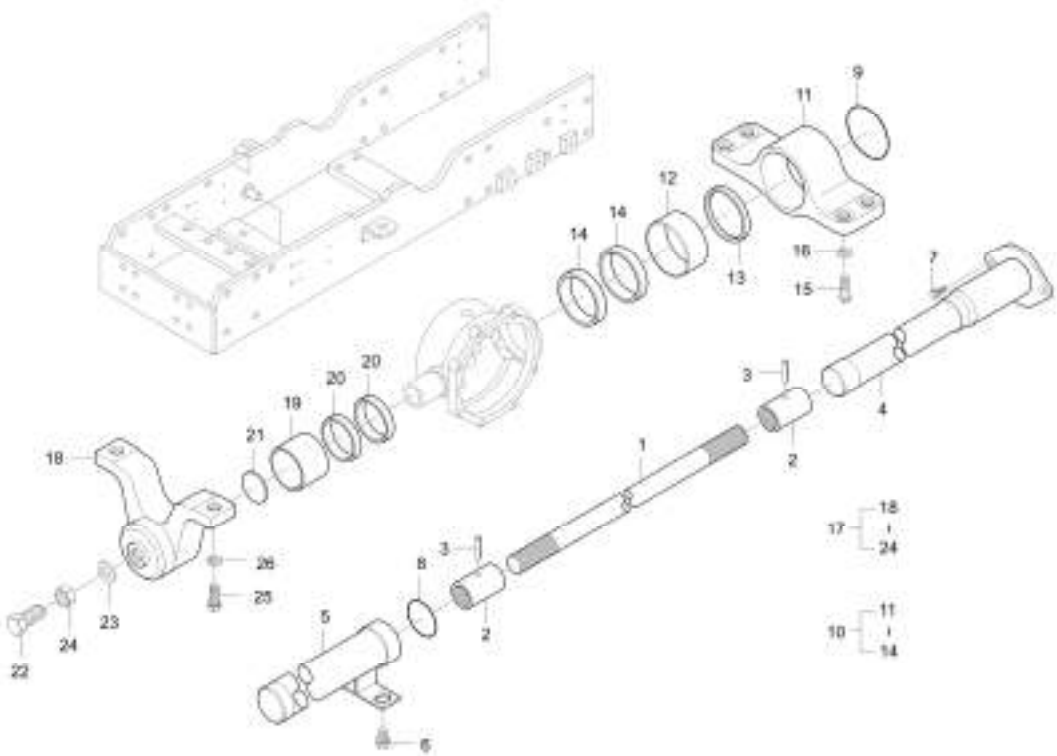

A : LK2554

No.	Part Number	Description	Qty A	Qty B	Qty C	Qty D	Qty E	I.C	Remark
1	84612-4451-0	SHAFT, PROPELLER	1						DIA20*1013
2	37650-4452-0	COUPLING	2						DIA28*50
3	05411-00628	PIN, SPRING	2						
4	84612-4457-0	COVER 1, PROPELLER SHAFT	1						
5	T2280-44591	COVER 2 PROPELLER SHAFT	1						
6	01133-51022	BOLT W/WASHER M10X1.25P	2						M10XP1.25
7	01123-50818	BOLT, WASHER	2						M8XP1.25
8	04811-00320	O RING v	2						DIA31.7
9	04811-00380	O RING	1						(P38)
10	T2280-A0200	ASSY,REAR BRACKET	1						
11	85726-4458-1	BRACKET, RR	1						
12	84612-4462-0	BUSH	1						MB6530DU
13	84612-4464-0	THRUST COLLAR	1						T1.5*70*70
14	84612-1383-0	SEAL, OIL	2						
15	84612-4453-1	REAMER BOLT	4						M12*1.25
16	04512-50120	SPRING_WASHER v	4						M12
17	T2280-A0190	ASSY,FRONT BRANKET	1						
18	84612-4461-1	BRACKET, FR	1						

----> Old replace New <---- New replace Old <-X-> Not interchangeable
<---> Interchangeable <-O-> Interchangeable with another part(s)
* Please place an order assy(*)

https://tractormanualz.com/

T260F-T210A

PROPER SHAFT GROUP

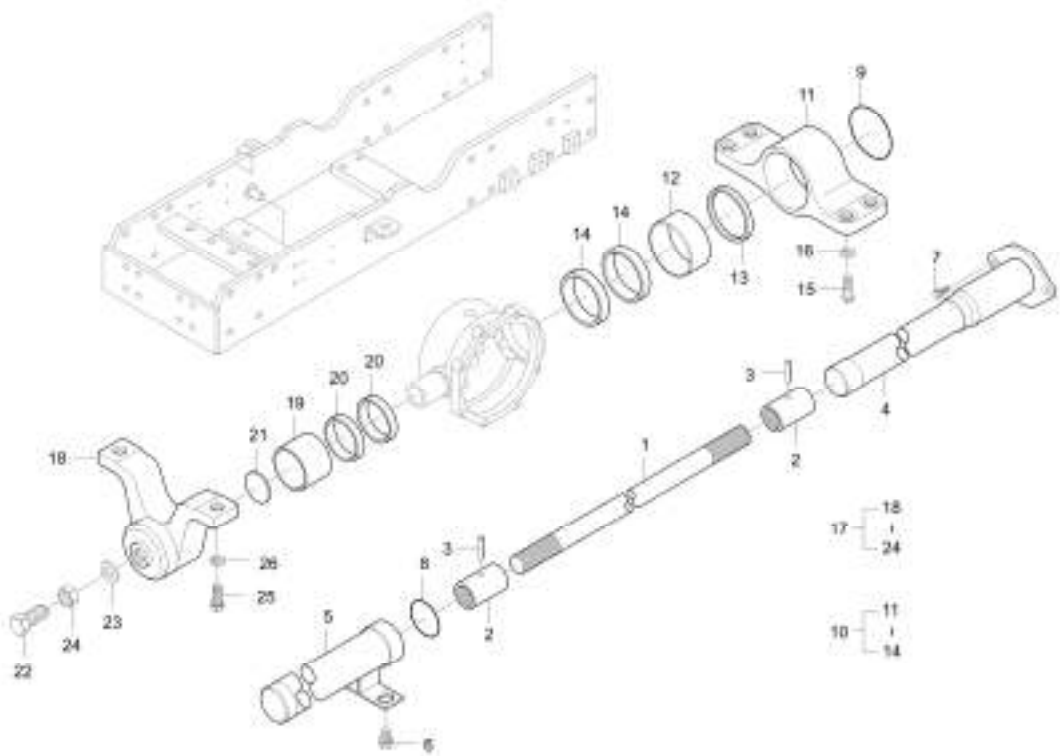

A : LK2554

No.	Part Number	Description	Qty A	Qty B	Qty C	Qty D	Qty E	I.C	Remark
19	84612-4463-0	BUSH	1						MB5030DU
20	84612-1382-0	SEAL, OIL	2						
21	84612-4465-0	COLLAR	1						T6*55*55
22	38630-4476-1	BOLT,ADJUSTING	1						DIA16
23	84612-4466-0	WASHER,SEAL	1						
23	38440-4475-1	WASHER SEAL	1					<----->	
24	02172-50160	NUT	1						M16*P1.5
25	01173-51435	BOLT v	2						M14XP1.5
26	04512-50140	SPRING_WASHER	2						M14

----> Old replace New <---- New replace Old <-X-> Not interchangeable
<---> Interchangeable <-O-> Interchangeable with another part(s)
* Please place an order assy(*)

https://tractormanualz.com/

LK2552-T235A FRONT SHIFT LEVER & MISSION CASE GROUP

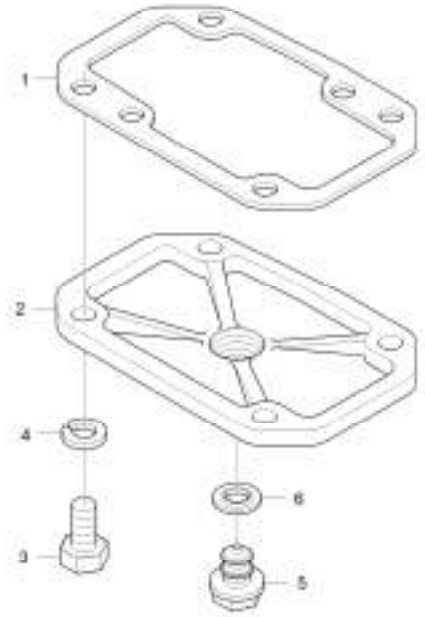

A : LK2554

No.	Part Number	Description	Qty A	Qty B	Qty C	Qty D	Qty E	I.C	Remark
1	T2215-21271	TRANSMISSION COVER	1						
2	37650-2128-2	PACKING	1						T0.5
3	S1173-51235	BOLT	4						
4	S4512-50120	WASHER-SPRING dnr v	4						
5	T4260-14271	PLUG,DRAIN dnr v	1						
6	04717-02650	WASHER, SEAL	1						PS3/4

----> Old replace New <---- New replace Old <-X-> Not interchangeable
<---> Interchangeable <-O-> Interchangeable with another part(s)
* Please place an order assy(*)

https://tractormanualz.com/

T260F-T350A

CLUTCH HOUSING GROUP

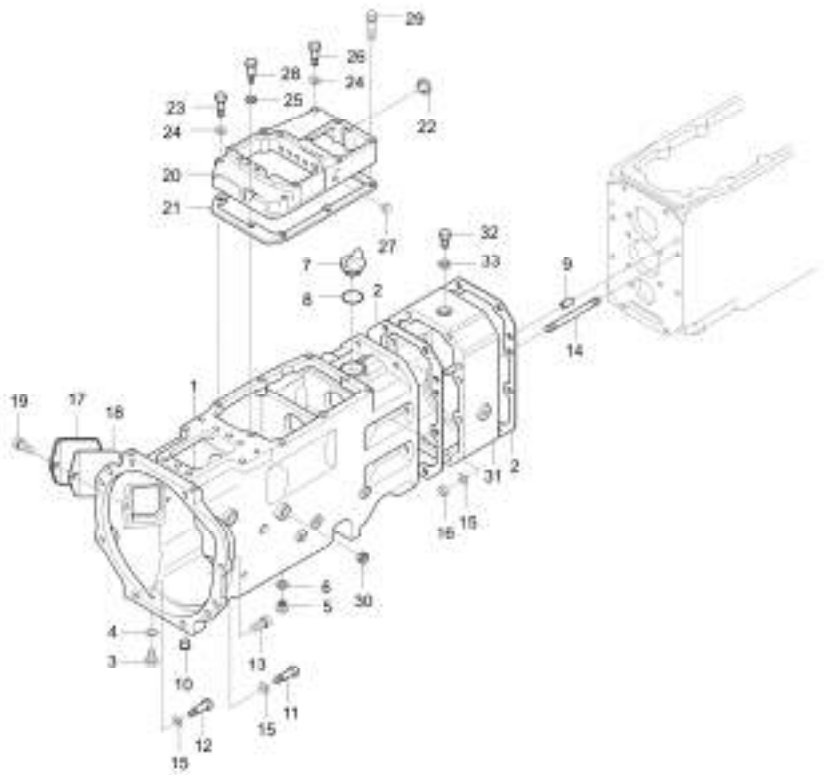

A : LK2554

No.	Part Number	Description	Qty A	Qty B	Qty C	Qty D	Qty E	I.C	Remark
1	T2240-14113	HOUSING,CLUTCH	1						
1	T2240-14114	HOUSTNG CLUTCH	1					<----->	
1	T2240-14115	HOUSING,CLUTCH v	1					<------	
2	34150-1414-4	PACKING	2						T0.5*295*190
3	06311-55010	PLUG	1						
4	04717-01000	WASHER, SEAL	1						M10
5	T4260-14271	PLUG,DRAIN dnr v	1						
6	04717-02650	WASHER, SEAL	1						PS3/4
7	38240-2141-2	COVER, OIL FILLER dnr v	1						
8	04811-50300	O RING	1						DIA29.4
9	05012-01018	PIN, STRAIGHT	4						DIA10XL18
10	32210-2758-1	PLUG	6						M12
11	01173-51070	BOLT dnr v	1						M10XP1.25
12	01173-51050	BOLT	1						M10*1.25
13	01133-51040	BOLT, WASHER	6						M10XP1.25
14	84612-1418-1	STUD	8						M10*1.25
15	04512-50100	WASHER, SPRING v	10						M10
16	02176-50100	NUT v	8						M10XP1.25

----> Old replace New <---- New replace Old <-X-> Not interchangeable
<---> Interchangeable <-O-> Interchangeable with another part(s)
* Please place an order assy(*)

https://tractormanualz.com/

T260F-T350A

CLUTCH HOUSING GROUP

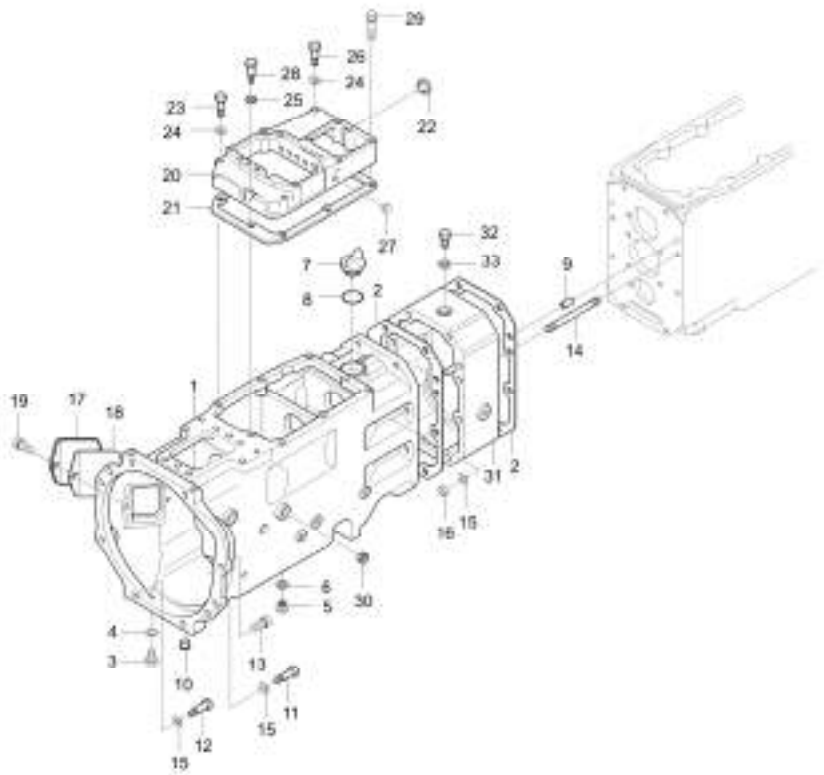

A : LK2554

No.	Part Number	Description	Qty A	Qty B	Qty C	Qty D	Qty E	I.C	Remark
17	34150-1416-2	COVER, HOUSING	1						T2.3*100*110
18	34150-1417-1	PACKING	1						T3.0
19	01123-50816	Hex Head Cap Screw	2						M8XP1.25
20	37150-2121-6	COVER, SHIFT	1						
20	T4340-21211	COVER SPEED CHANGE	1					<----->	
21	34650-5914-2	PACKING	1						T0.5
22	34150-2125-2	PLUG	5						
22	T2240-21262	PLUG	5					<------	
23	01153-50845	BOLT	1						M8*1.25
24	04512-50080	SPRING WASHER	1						M08
25	04717-00800	SEAL WASHER	1						M8
26	01153-50855	BOLT	1						HEX12.M8P1.25
27	06350-00810	PLUG v	2						
28	01123-50845	BOLT, WASHER	2						M8*P1.25
29	01123-50855	BOLT, WASHER v	2						M8XP1.25
30	T4240-14212	GAUGE,OIL	1 ~ 923000999						
30	T4680-14211	GAUGE OIL v	1 023000001 ~					<--X-->	
31	T2262-14151	COLLER	1						

----> Old replace New
<---> Interchangeable
* Please place an order assy(*)
<---- New replace Old
<-O-> Interchangeable with another part(s)
<-X-> Not interchangeable

https://tractormanualz.com/

T260F-T350A

CLUTCH HOUSING GROUP

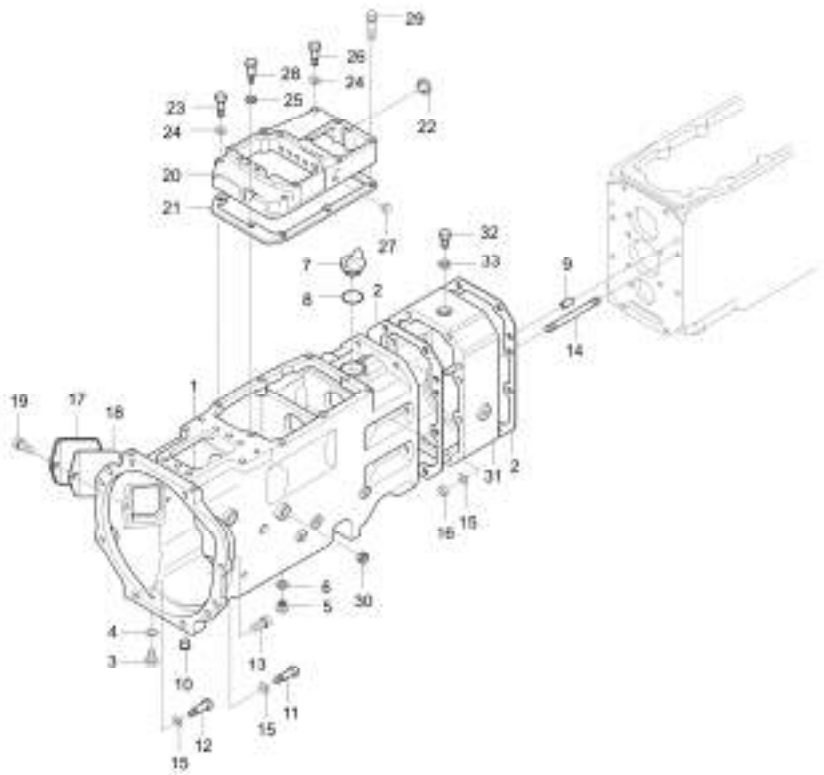

A : LK2554

No.	Part Number	Description	Qty A	Qty B	Qty C	Qty D	Qty E	I.C	Remark
32	06331-35016	PLUG	1						HEX22*25,M 16*P1.5
33	04717-01600	WASHER, SEAL	1						

----> Old replace New
<---> Interchangeable
* Please place an order assy(*)
<---- New replace Old
<-O-> Interchangeable with another part(s)
<-X-> Not interchangeable

https://tractormanualz.com/

T220F-T360A

TRANSMISSION CASE GROUP

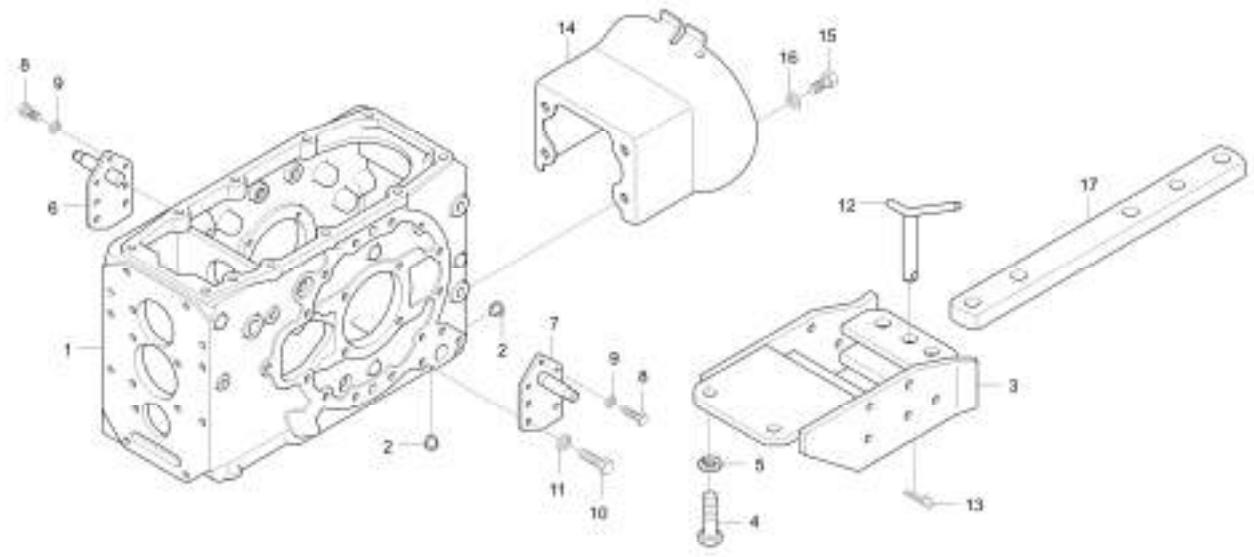

A : LK2554

No.	Part Number	Description	Qty A	Qty B	Qty C	Qty D	Qty E	I.C	Remark
1	T2240-21112	CASE,TRANSMISSION	1						38KG
1	T2240-21113	CASE TRANSMISSON	1					<----->	
2	31220-1429-3	PLUG	2						
3	84612-2981-1	FRAME, DRAWBAR	1						
4	01173-51430	BOLT	2						M14P1.5*30
5	04512-50140	SPRING_WASHER	2						M14
6	84612-2973-0	BRACKET, HITCH RH	1						
7	84612-2974-0	BRACKET, HITCH LH	1						
8	01173-51228	OB-BOLT	6						M12*1.25
9	04512-50120	SPRING_WASHER v	6						M12
10	01173-51425	BOLT	8						M14P1.5
11	04512-50140	SPRING_WASHER	8						M14
12	84612-2928-1	CONNECTING PIN ASSY	3						
13	70515-1633-4	CIR CLIP	2						DIA5.0
14	84612-2549-0	COVER, PTO	1						
15	01173-51220	HEX HEAD CAP SCREW	4						M12P1.25
16	04512-50120	SPRING_WASHER v	4						M12
17	84612-7829-0	DRAWBAR	1						T25

----> Old replace New <---- New replace Old <-X-> Not interchangeable
<---> Interchangeable <-O-> Interchangeable with another part(s)
* Please place an order assy(*)

https://tractormanualz.com/

L2203-T370A

MAIN SHAFT GROUP

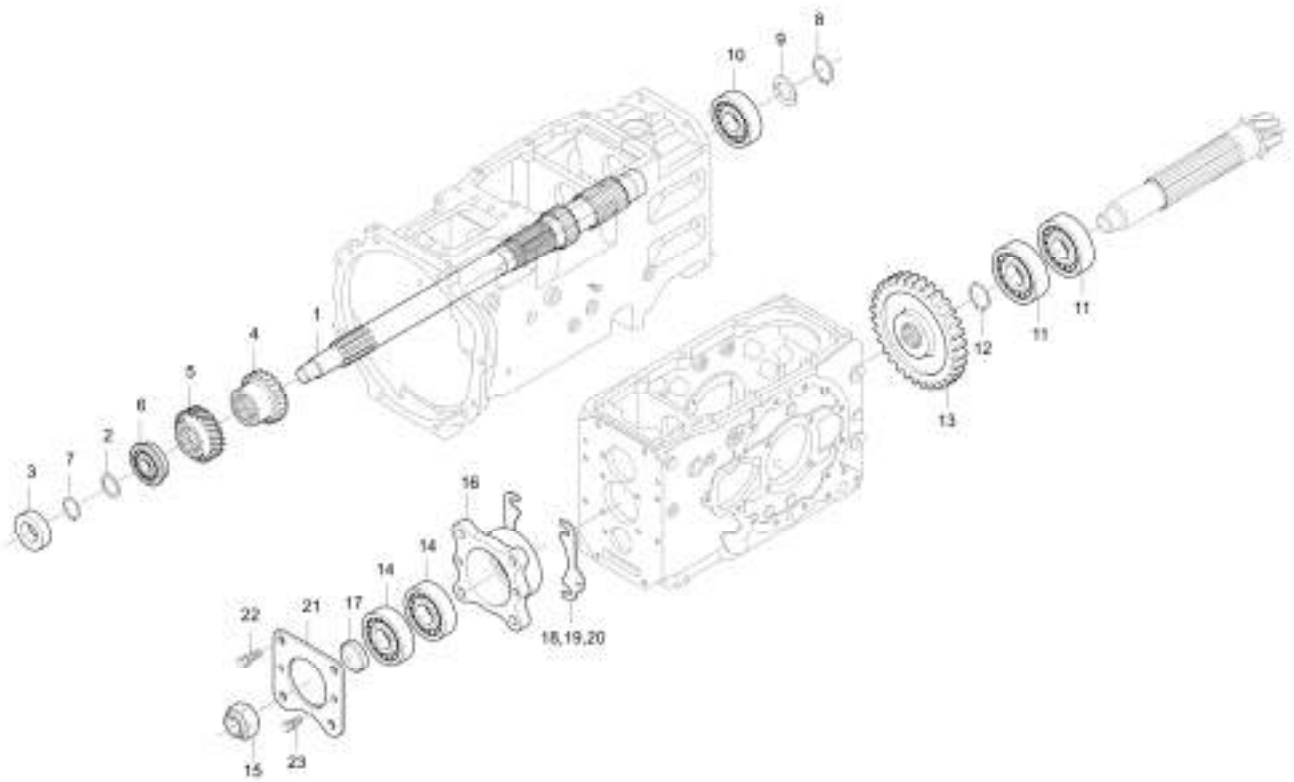

A : LK2554

No.	Part Number	Description	Qty A	Qty B	Qty C	Qty D	Qty E	I.C	Remark
1	T2280-21511	SHAFT,MAIN obs v	1						DIA42
2	34150-2156-1	COLLAR	1						T2*42*42
3	09502-55210	SEAL OIL v	1						DIA25
4	37150-2152-1	GEAR, SPUR 17	1						
5	37650-2153-0	GEAR,SPUR 21	1						
6	08151-06305	BALL BEARING	1						#6305NR
7	37150-2160-2	SNAP RING	1						T1.5
8	04612-00300	SNAP RING	1						DIA30
9	38455-2314-1	WASHER	1						
10	08241-05206	BEARING BALL	1						
11	08101-06306	BALL BEARING	2						DIA30
12	04612-00300	SNAP RING	1						DIA30
13	37650-9106-0	GEAR, 46X27	1						
14	08101-06305	BEARING,BALL v	2						DIA25
15	31220-2234-2	NUT	1						HEX32*17
16	37150-2215-1	CASE, BEARING	1						
16	T2240-22152	CASE, BEARING	1					<----->	
16	T2240-22153	CASE, BEARING	1					<----->	

----> Old replace New
<---- New replace Old
<-X-> Not interchangeable
<---> Interchangeable
<-O-> Interchangeable with another part(s)
* Please place an order assy(*)

https://tractormanualz.com/

L2203-T370A

MAIN SHAFT GROUP

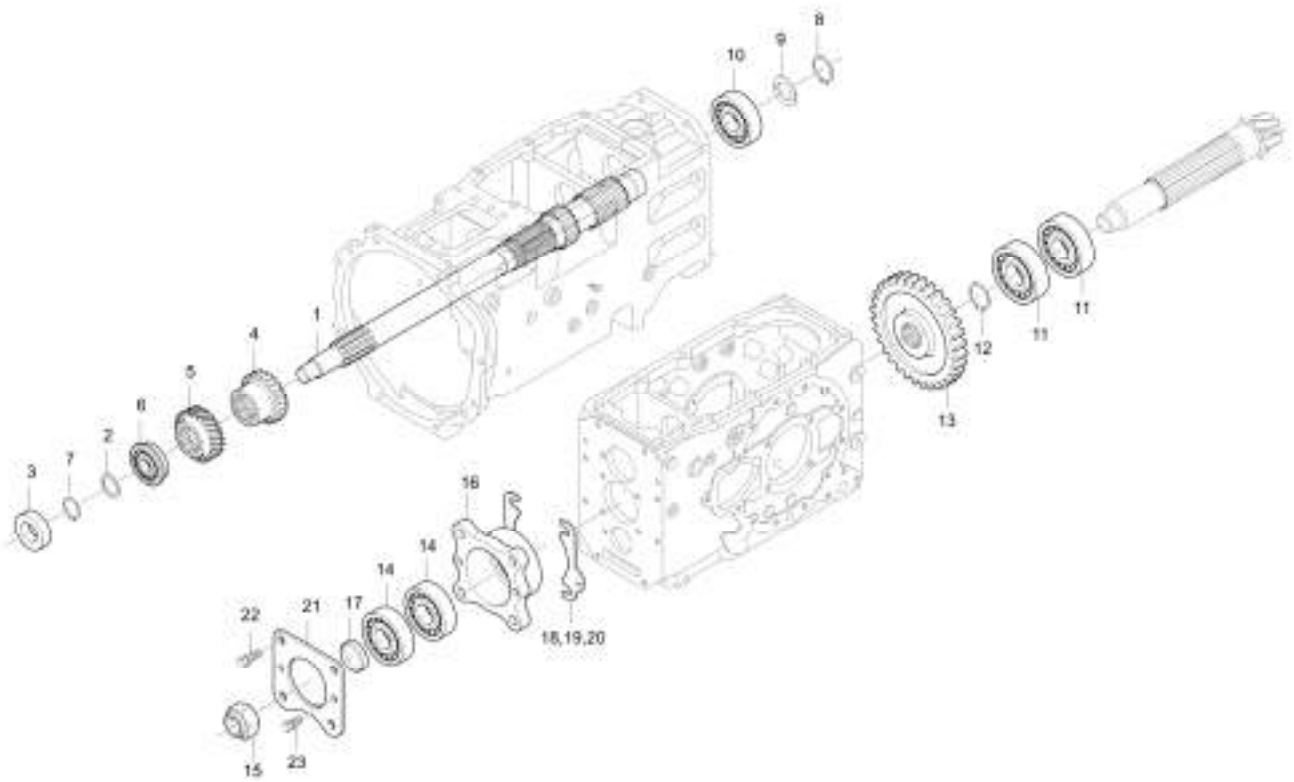

A : LK2554

No.	Part Number	Description	Qty A	Qty B	Qty C	Qty D	Qty E	I.C	Remark
17	37150-2177-1	SPACER	1						OD32*T3.2
18	34150-2261-1	SHIM, 0.5	2						T0.5
19	34150-2262-1	SHIM, 0.2	4						T0.2
20	34150-2263-1	SHIM, 0.1	2						T0.1
21	34150-2217-2	BEARING COVER	1						T4.5
22	01133-51035	WASHER BOLT	4						M10XP1.25
23	01123-50816	Hex Head Cap Screw	2						M8XP1.25

----> Old replace New
<---> Interchangeable
* Please place an order assy(*)
<---- New replace Old
<-O-> Interchangeable with another part(s)
<-X-> Not interchangeable

https://tractormanualz.com/

T260F-T380A

COUNTER SHAFT GROUP

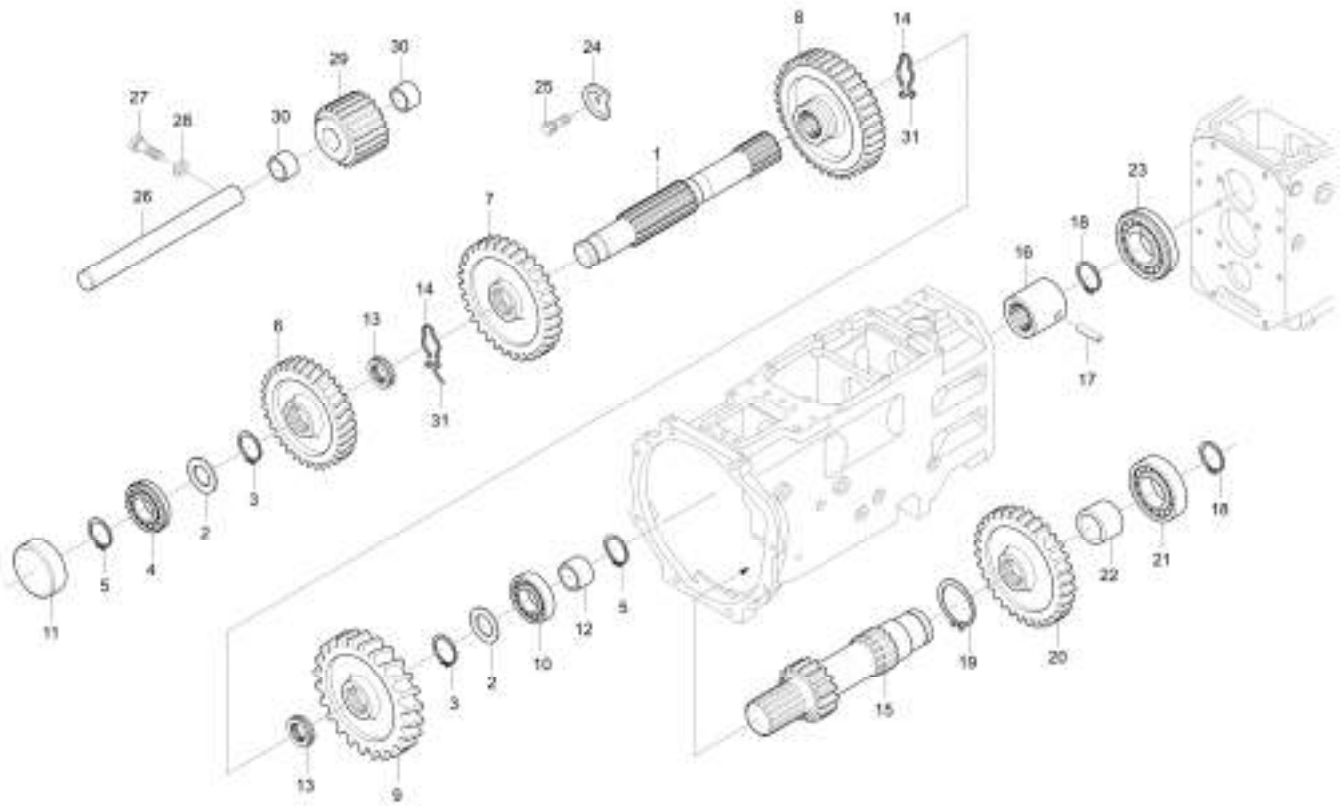

A : LK2554

No.	Part Number	Description	Qty A	Qty B	Qty C	Qty D	Qty E	I.C	Remark
1	37150-2533-2	SHAFT, COUNTER	1						DIA36*367
2	37150-2176-1	COLLAR, THRUST	2						T3.2*47*47
3	37150-2179-1	SNAP RING	2						T1.2
4	08151-06205	BEARING,BALL	1						#6205NR
5	37150-2155-1	SNAP RING	2						
6	37650-2171-0	GEAR, 34 SPUR	1						
7	37150-2172-3	GEAR, 41 SPUR	1						
8	37150-2173-3	GEAR,SPUR 45	1						
9	37150-2174-1	GEAR, 45	1						
10	08101-06205	BEARING BALL v	1						DIA25
11	34150-2165-1	BEARING COVER	1						
12	37150-2177-1	SPACER	1						OD32*T3.2
13	37150-2175-3	BOSS, SPLINE	2						DIA36*35
14	35340-2178-2	SNAP RING	2						DIA2.3
15	84612-9107-1	SHAFT, GEAR 14	1						DIA4.2
16	37150-2168-2	COUPLING	1						DIA38*50
17	05411-01040	Lock Pin	1						
18	37150-2155-1	SNAP RING	2						

----> Old replace New <---- New replace Old <-X-> Not interchangeable
<---> Interchangeable <-O-> Interchangeable with another part(s)
* Please place an order assy(*)

https://tractormanualz.com/

T260F-T380A

COUNTER SHAFT GROUP

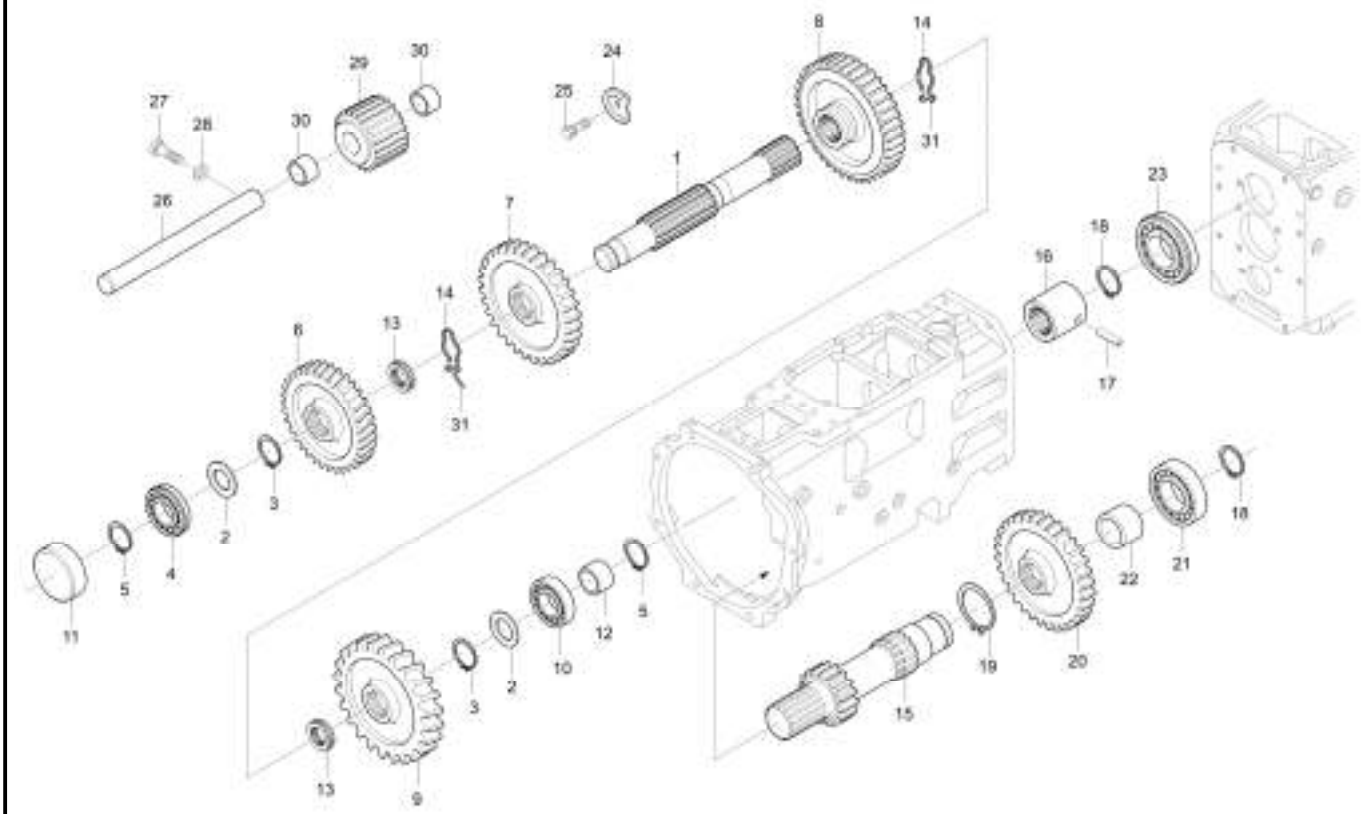

A : LK2554

No.	Part Number	Description	Qty A	Qty B	Qty C	Qty D	Qty E	I.C	Remark
19	04612-00300	SNAP RING	1						DIA30
20	37650-2192-0	GEAR, 33 SPUR	1						
21	08101-06305	BEARING,BALL v	1						DIA25
22	37150-2194-1	SPACER	1						OD34*T3.2
23	08151-06305	BALL BEARING	1						#6305NR
24	34150-2194-2	BEARING, RETAINER	1						T3.2*50*55
25	01123-50816	Hex Head Cap Screw	1						M8XP1.25
26	37150-2311-1	SHAFT, REVERSE	1						DIA22*198
27	37150-2312-3	BOLT, CLAMPING	1						HEX12*49
28	04717-00800	SEAL WASHER	1						M8
29	37150-2313-2	GEAR, 22	1						
30	31220-2636-7	BUSH	2						
31	35340-2179-2	WIRE	2						DIA1.4*48

----> Old replace New <---- New replace Old <-X-> Not interchangeable
<---> Interchangeable <-O-> Interchangeable with another part(s)
* Please place an order assy(*)

https://tractormanualz.com/

T260F-T390A

DIFF SYSTEM GROUP

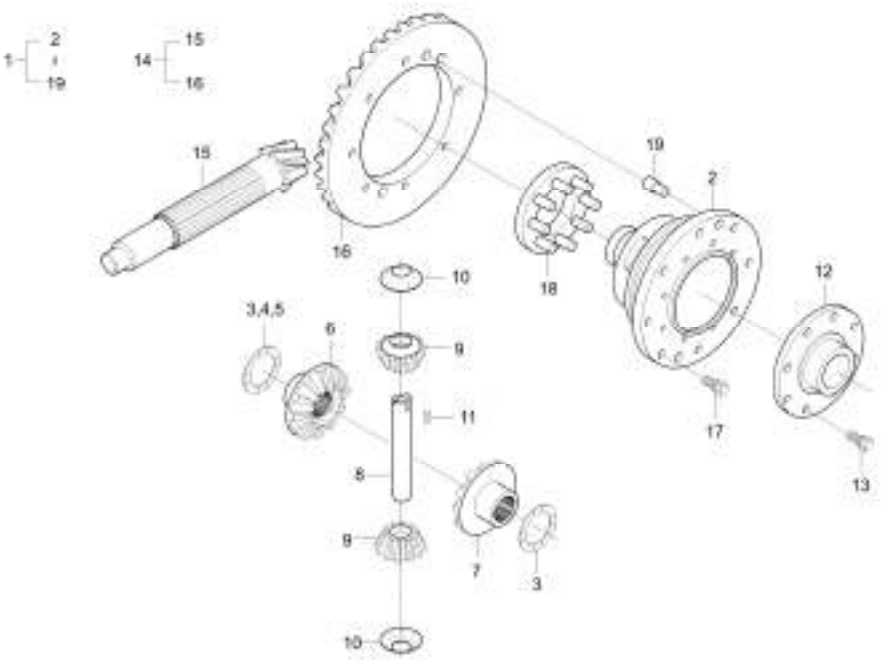

A : LK2554

No.	Part Number	Description	Qty A	Qty B	Qty C	Qty D	Qty E	I.C	Remark
1	T2261-26101	ASS'Y DIFF CASE v	1						
1	T2240-26102	ASSY DIFFRENTIAL v	1					<----->	
1	T2240-26103	ASSY,DIFF SYSTEM	1					<----->	
2	T2261-26511	CASE, DIFFERENTIAL SYSTEM	1						
3	31220-2648-3	WASHER, DIFF	2						T1.5
4	31220-2649-3	WASHER, DIFF	2						T1.6
5	37150-2648-1	WASHER, DIFF	2						T1.7
6	38180-2644-1	GEAR DIFE SIDE, LH	1						
7	38440-4498-1	GEAR, DIFF RH	1						
8	T2440-26341	SHAFT DIFF PINIO	1						
9	31220-2635-9	PINION	4						
9	T2240-26352	PINION DIFFERENTIAL obs v	2					<----->	
9	T2240-26353	PINION, DIFFERENTIAL	2					<----->	
10	31220-2639-2	WASHER, DIFF PINION	4						
11	31220-2628-1	KEY	2						
12	T2240-26521	CAP DIFFERENTIAL CASE	1						
13	01133-51035	WASHER BOLT	8						M10XP1.25
14	T2240-26111	ASSY,SPIRAL BEVEL GEAR	1						

----> Old replace New
<---- New replace Old
<-X-> Not interchangeable
<---> Interchangeable
<-O-> Interchangeable with another part(s)
* Please place an order assy(*)

https://tractormanualz.com/

T260F-T390A

DIFF SYSTEM GROUP

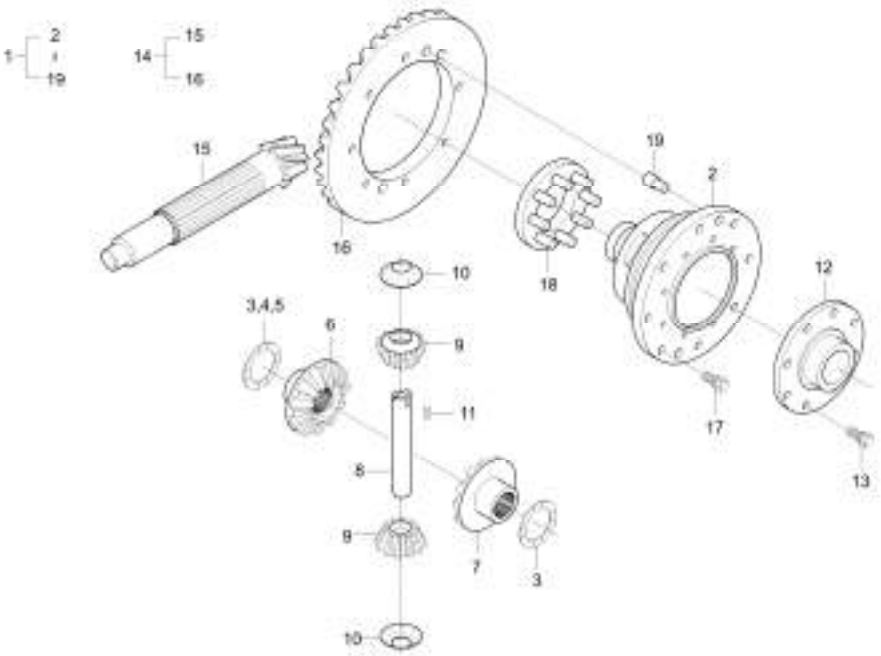

A : LK2554

No.	Part Number	Description	Qty A	Qty B	Qty C	Qty D	Qty E	I.C	Remark
15	37150-2211-3	PINION,SPIRAL BEVEL	1						
16	37300-2612-5	GEAR,SPIRAL BEVER 39	1						
17	37800-4387-1	BOLT	8						M10xP1.25
18	34150-2661-4	SHIFT, DIFFRENTIAL HOLD	1						
19	T2240-28171	PIN, PARALLEL	2						

----> Old replace New <---- New replace Old <-X-> Not interchangeable
<---> Interchangeable <-O-> Interchangeable with another part(s)
* Please place an order assy(*)

https://tractormanualz.com/

T220F-T400A

DIFF LOCK PEDAL GROUP

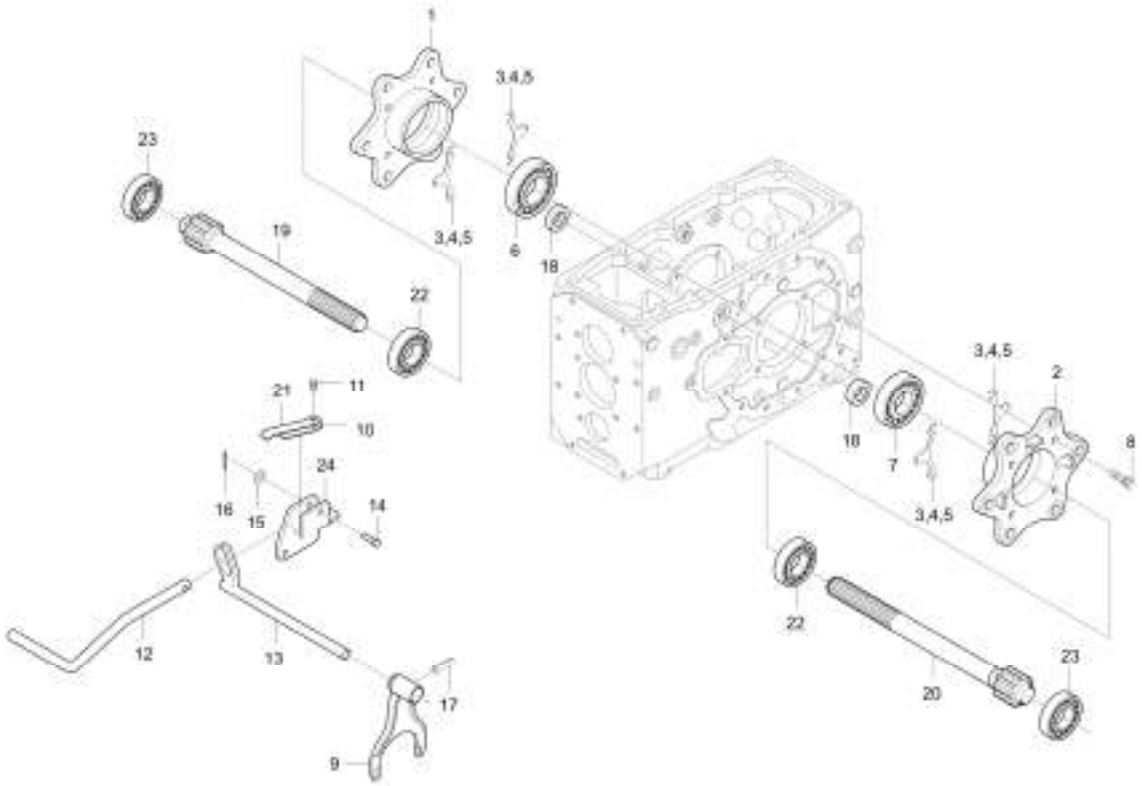

A : LK2554

No.	Part Number	Description	Qty A	Qty B	Qty C	Qty D	Qty E	I.C	Remark
1	T2242-26551	CASE, BEARING(RH)	1						2KG
2	T2242-26562	CASE, BEARING LH	1						2.5KG
3	37150-2616-1	SHIM 0.2	12						
4	37150-2617-1	SHIM 0.1	8						
5	37150-2618-1	SHIM 0.5	4						
6	08101-06210	BALL BEARING	1						#6210
7	08101-06208	BALL BEARING	1						DIA40
8	01133-51030	BOLT, WASHER	8						M10XP1.25
9	37150-2663-2	FORK, DIFFERENTIAL FIXING	1						360G
10	37150-2664-3	SPRING	1						T2.6*110*20
10	T2240-26642	SPRING	1					<----->	T2.8
11	01123-50816	Hex Head Cap Screw	1						M8XP1.25
12	T2242-26651	PEDAL DIFF LOCK	1						DIA16
13	T2242-26681	SHAFT, DIFF LOCK FORK	1						
13	T2242-26682	CAM,DIFF LOCK	1					<----->	
14	05122-50835	OB PIN,JOINT	1						
15	04013-50080	WASHER	1						
16	05511-50220	PIN, SPLIT	1						DIA1.8XL20

----> Old replace New
<---- New replace Old
<-X-> Not interchangeable
<---> Interchangeable
<-O-> Interchangeable with another part(s)
* Please place an order assy(*)

https://tractormanualz.com/

T220F-T400A

DIFF LOCK PEDAL GROUP

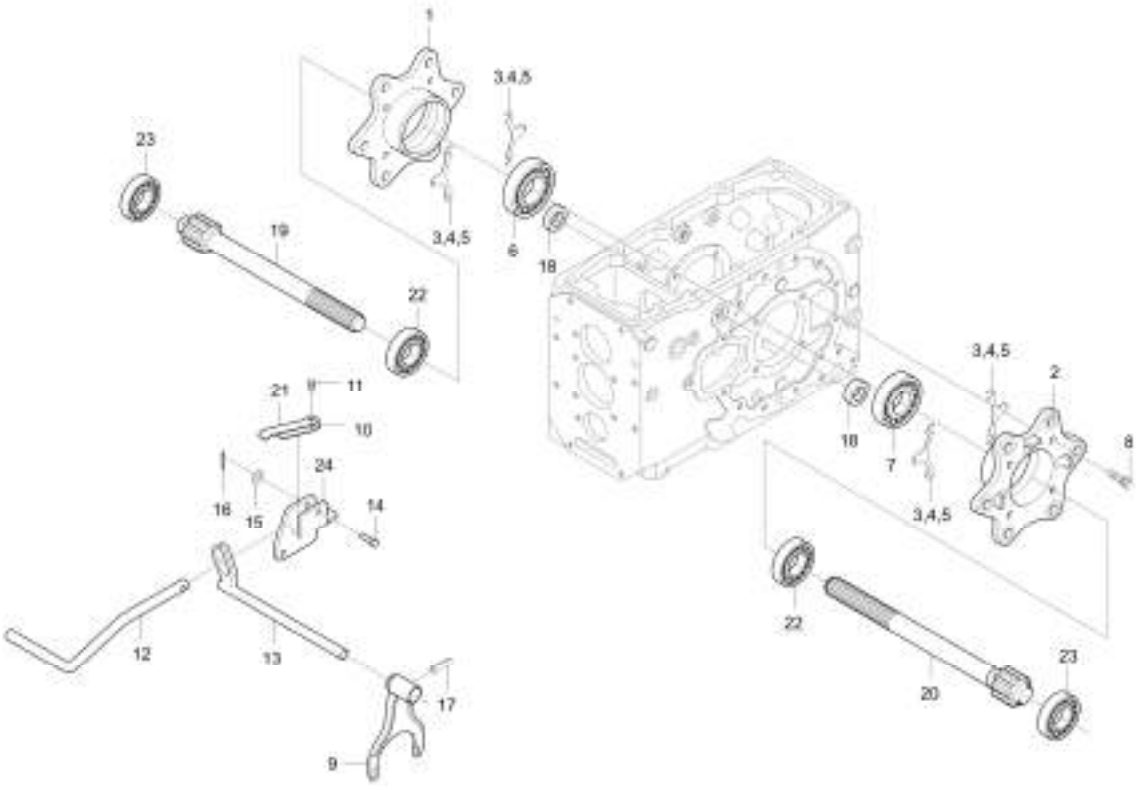

A : LK2554

No.	Part Number	Description	Qty A	Qty B	Qty C	Qty D	Qty E	I.C	Remark
17	05411-00630	PIN, SPRING	1						DIA6.4XL30
18	09500-16287	SEAL,OIL	2						DIA16
19	T2242-26711	GEAR SHAFT10(RH)	1						
20	T2242-26721	GEAR SHAFT10(LH)	1						
21	37150-2666-1	SPRING	1						T2.6
21	T2240-26742	SPRING	1					<----->	T2.8
22	38260-2216-1	BEARING BALL v	2						6306A
23	08100-00031	BEARING BALL	2						
24	37150-2667-4	BRACKET PEDAL	1						
24	37150-2667-5	BRACKET PEDAL	1					<------	T6.0

----> Old replace New
<---- New replace Old
<-X-> Not interchangeable
<---> Interchangeable
<-O-> Interchangeable with another part(s)
* Please place an order assy(*)

https://tractormanualz.com/

T260F-T410A

PTO SHAFT GROUP

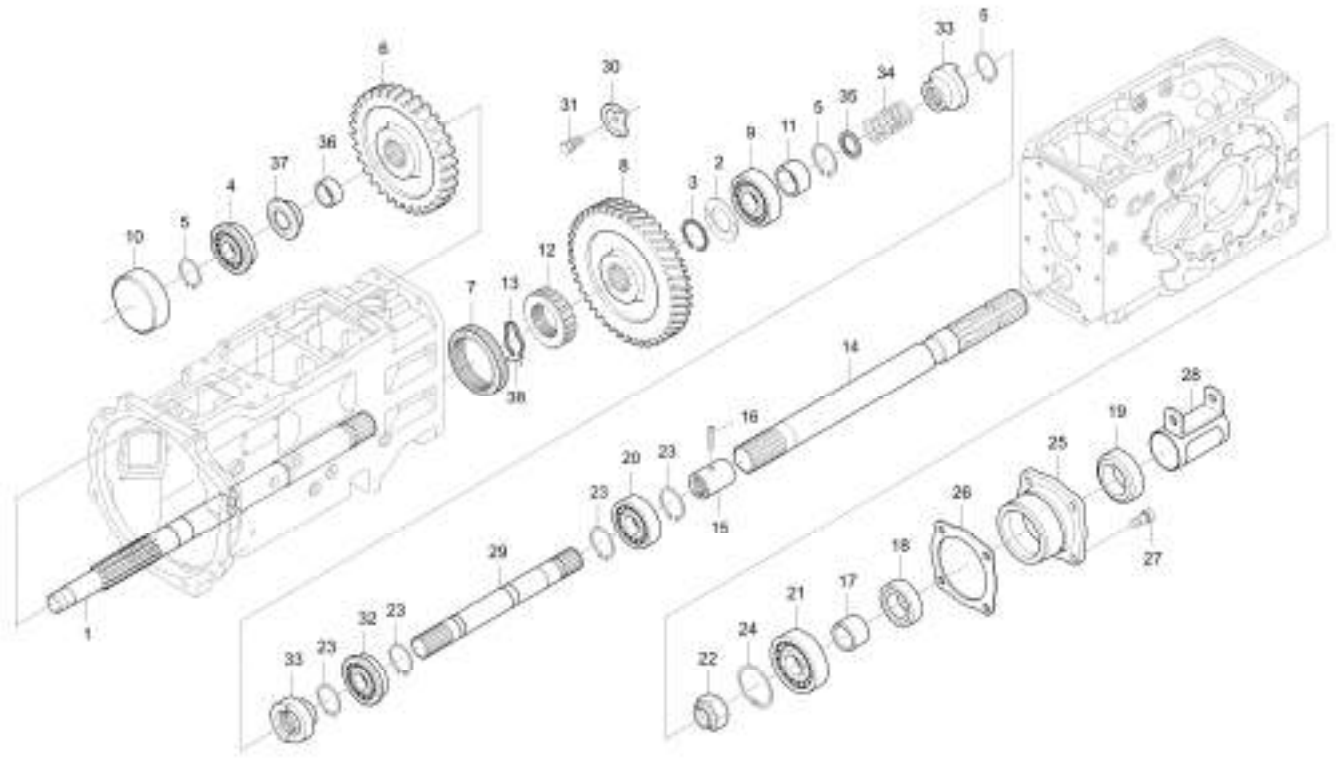

A : LK2554

No.	Part Number	Description	Qty A	Qty B	Qty C	Qty D	Qty E	I.C	Remark
1	84612-2161-0	SHAFT, PTO COUNTER	1						DIA36
2	37150-2176-1	COLLAR, THRUST	1						T3.2*47*47
3	37150-2179-1	SNAP RING	1						T1.2
4	08151-06205	BEARING,BALL	1						#6205NR
5	37150-2155-1	SNAP RING	2						
6	37150-2172-3	GEAR, 41 SPUR	1						
7	84612-2178-1	SHIFT	1						
8	37150-2174-1	GEAR, 45	1						
9	08101-06205	BEARING BALL v	1						DIA25
10	34150-2165-1	BEARING COVER	1						
11	37150-2177-1	SPACER	1						OD32*T3.2
12	37150-2175-3	BOSS, SPLINE	1						DIA36*35
13	35340-2178-2	SNAP RING	1						DIA2.3
14	37220-9126-1	SHAFT, PTO	1						
15	37150-2168-2	COUPLING	1						DIA38*50
16	05411-01040	Lock Pin	1						
17	T2240-25351	COLLER,OIL SEAL dnr v	1						DIA38*20
18	37150-2536-3	SEAL, OIL	1						

----> Old replace New <---- New replace Old <-X-> Not interchangeable
<---> Interchangeable <-O-> Interchangeable with another part(s)
* Please place an order assy(*)

https://tractormanualz.com/

T260F-T410A

PTO SHAFT GROUP

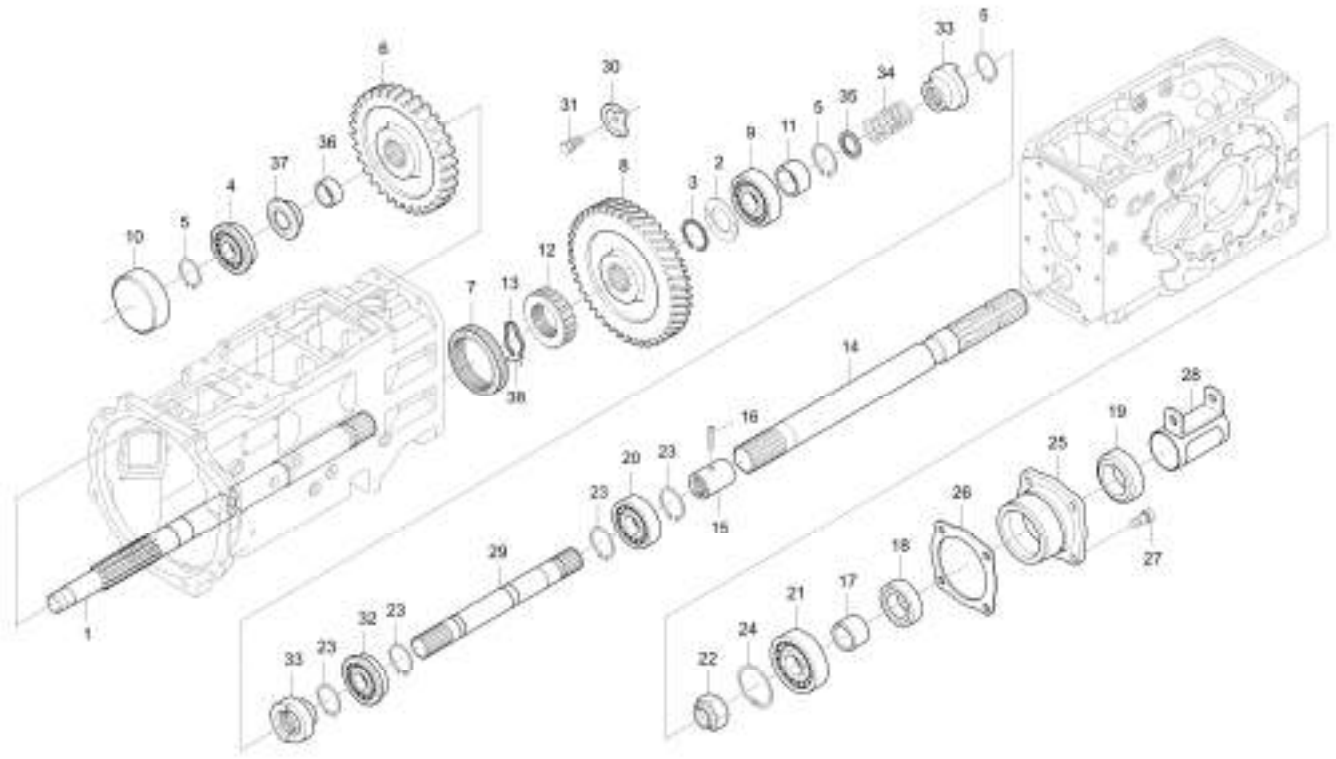

A : LK2554

No.	Part Number	Description	Qty A	Qty B	Qty C	Qty D	Qty E	I.C	Remark
19	38240-2537-1	USE 38240-25371	1						
20	08101-06205	BEARING BALL v	1						DIA25
21	08101-06206	BALL BEARING	1						#6206
22	34150-2532-1	NUT	1						HEX38*15
23	37150-2155-1	SNAP RING	6						
24	04611-00620	CIR CLIP, INTERNAL v	1						DIA62
25	37150-2541-3	CASE, BEARING	1						1.3KG
26	37150-2542-2	PACKING	1						T0.5
27	01123-50822	BOLT, WASHER	4						M8XP1.25
28	76706-1481-1	COVER, PTO	1						
28	T2240-25452	COVER,P.T.O.SHAFT	1					<------	
29	84612-9127-0	SHAFT, PTO DRIVE	1						DIA26
30	34150-2194-2	BEARING, RETAINER	1						T3.2*50*55
31	01123-50820	BOLT, WASHER v	1						M8XP1.25
32	08151-06205	BEARING,BALL	1						#6205NR
33	84612-1438-0	CAM, CLUTCH	2						
34	84612-1439-0	SPRING	1						DIA2.6
35	84612-1445-0	COLLAR dnr v	1						DIA36*8

----> Old replace New <---- New replace Old <-X-> Not interchangeable
<---> Interchangeable <-O-> Interchangeable with another part(s)
* Please place an order assy(*)

https://tractormanualz.com/

T260F-T410A

PTO SHAFT GROUP

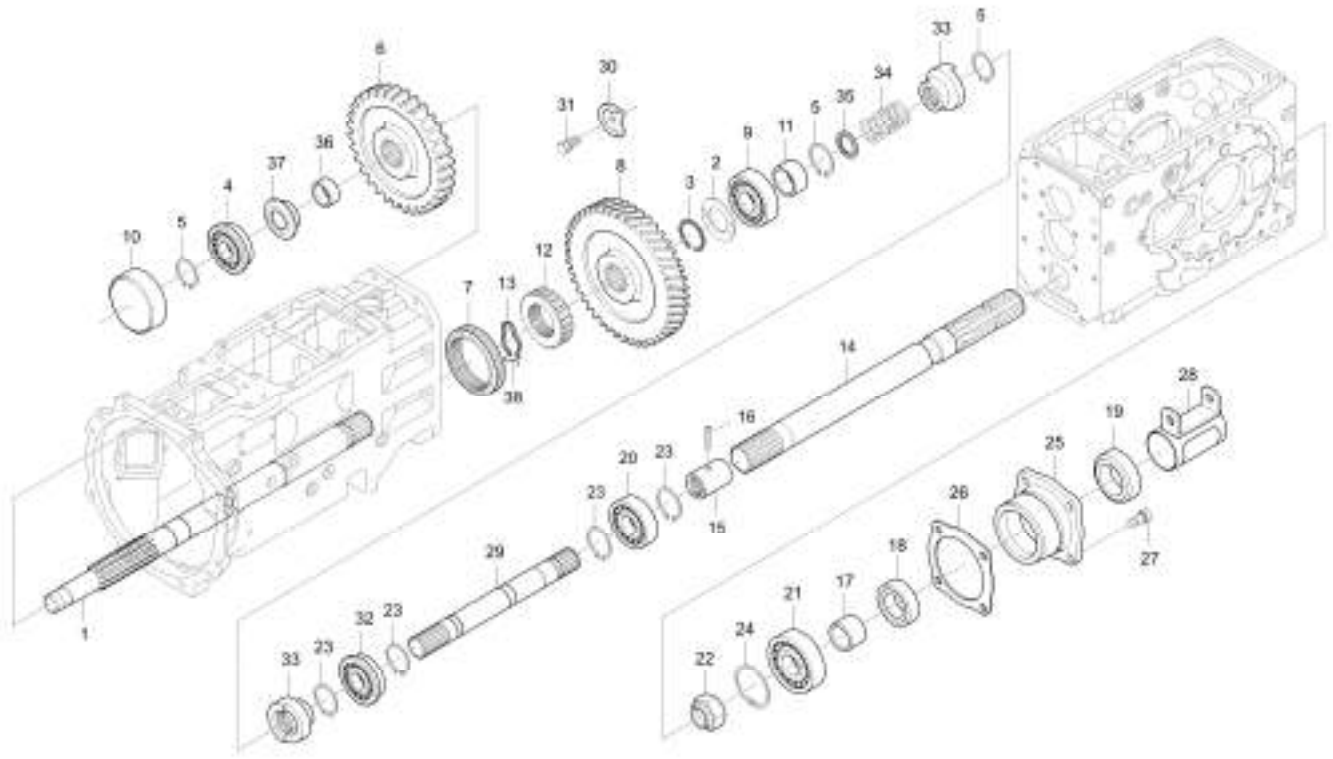

A : LK2554

No.	Part Number	Description	Qty A	Qty B	Qty C	Qty D	Qty E	I.C	Remark
36	84612-2174-1	SPACER	1						OD32*T3.2
37	84612-2176-1	COLLAR, THRUST	1						
38	35340-2179-2	WIRE	1						DIA1.4*48

----> Old replace New
<---> Interchangeable
* Please place an order assy(*)
<---- New replace Old
<-O-> Interchangeable with another part(s)
<-X-> Not interchangeable

https://tractormanualz.com/

T260F-T420A

SHIFT SYSTEM 1 GROUP

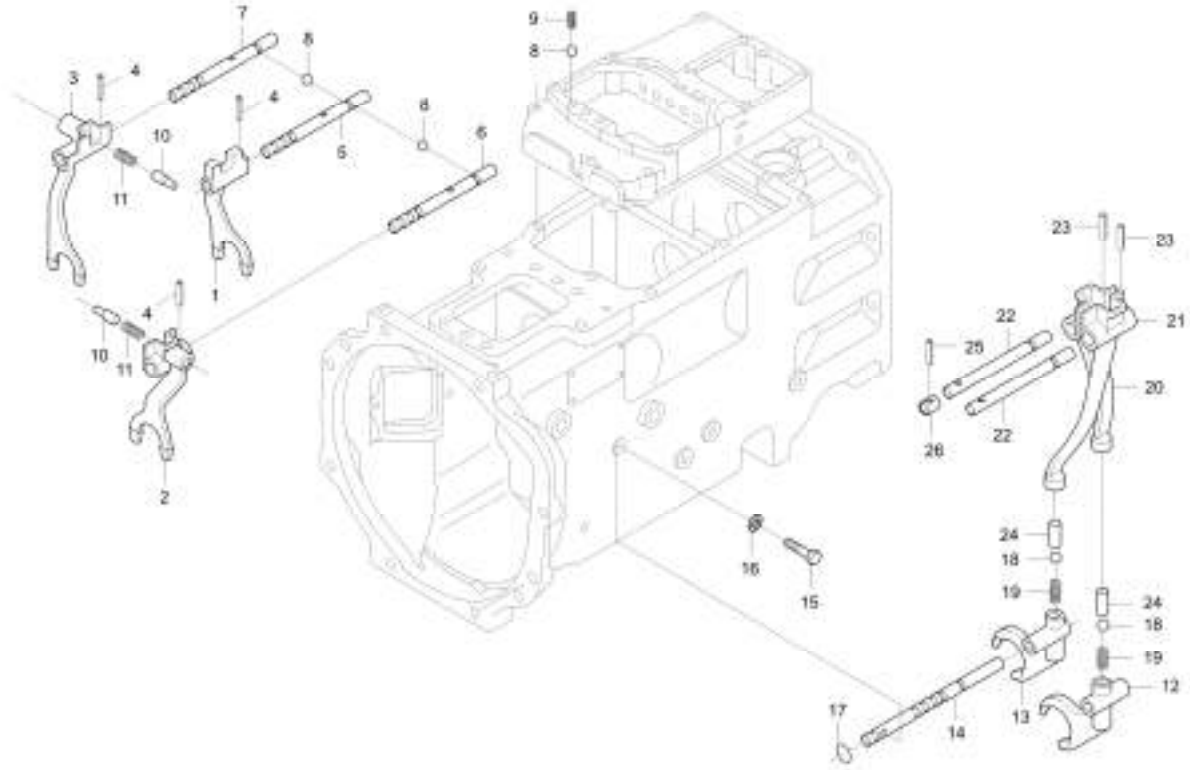

A : LK2554

No.	Part Number	Description	Qty A	Qty B	Qty C	Qty D	Qty E	I.C	Remark
1	35305-2351-2	FORK, SHIFT 1X2	1						300G
2	35305-2352-2	FORK,SHIFT(3. 4)	1						
3	35305-2353-1	FORK, SHIFT	1						280G
4	05411-00420	PIN, SPRING	3						DIA4.4XL20
5	37150-2354-2	ROD, FORK	1						DIA13*148
6	37150-2355-1	ROD, FORK	1						DIA13*148
7	37150-2357-2	ROD, FORK	1						DIA13*148
8	07715-01605	STEEL BALL	5						DIA7.9375
9	62331-1853-2	SPRING v	3						DIA1.4
10	34150-2361-3	PIECE, NEUTRAL	2						DIA12*33
11	34150-2362-1	SPRING	2						DIA1.2
12	37150-2461-2	FORK, PTO SHIFT 1X2	1						280G
13	37150-2462-2	FORK, PTO SHIFT 3X4	1						300G
14	37150-2463-1	FORK ROD, PTO	1						DIA13*202
15	34150-2468-1	SCREW,SET	1						HEX12*34
16	04717-00800	SEAL WASHER	1						M8
17	04811-00090	O RING	1						DIA8.8
18	07715-01605	STEEL BALL	3						DIA7.9375

----> Old replace New <---- New replace Old <-X-> Not interchangeable
<---> Interchangeable <-O-> Interchangeable with another part(s)
* Please place an order assy(*)

https://tractormanualz.com/

T260F-T420A

SHIFT SYSTEM 1 GROUP

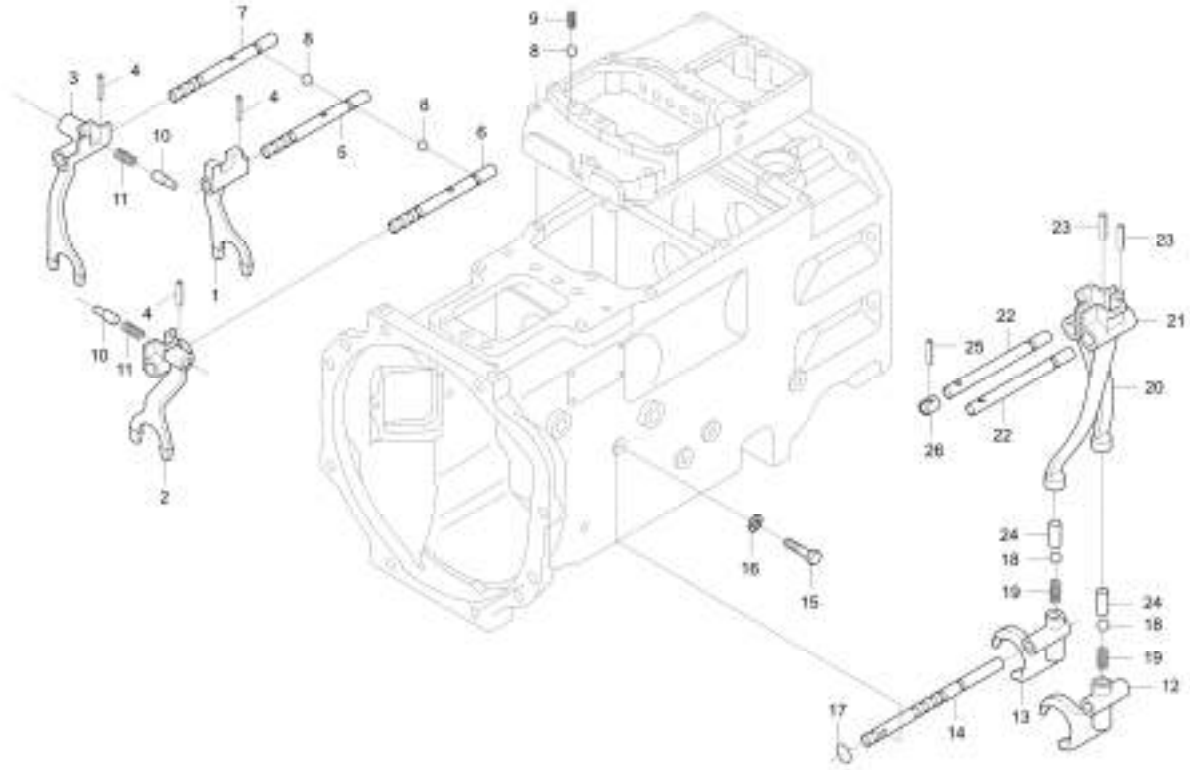

A : LK2554

No.	Part Number	Description	Qty A	Qty B	Qty C	Qty D	Qty E	I.C	Remark
19	62331-1853-2	SPRING v	2						DIA1.4
20	35170-2471-1	LEVER, PTO FORK 1X2	1						290G
21	35170-2472-1	LEVER, PTO FORK 3X4	1						290G
22	37150-2476-1	SHAFT, PTO FORK LEVER	2						
23	05411-00425	PIN, SPRING	2						
24	34150-2469-1	PIN	2						DIA11*29
25	05411-00432	PIN,SPRING	1						
26	84612-2359-1	COLLAR	1						DIA22

----> Old replace New <---- New replace Old <-X-> Not interchangeable
<---> Interchangeable <-O-> Interchangeable with another part(s)
* Please place an order assy(*)

https://tractormanualz.com/

LK2554-T430A

MAIN SHIFT LEVER GROUP

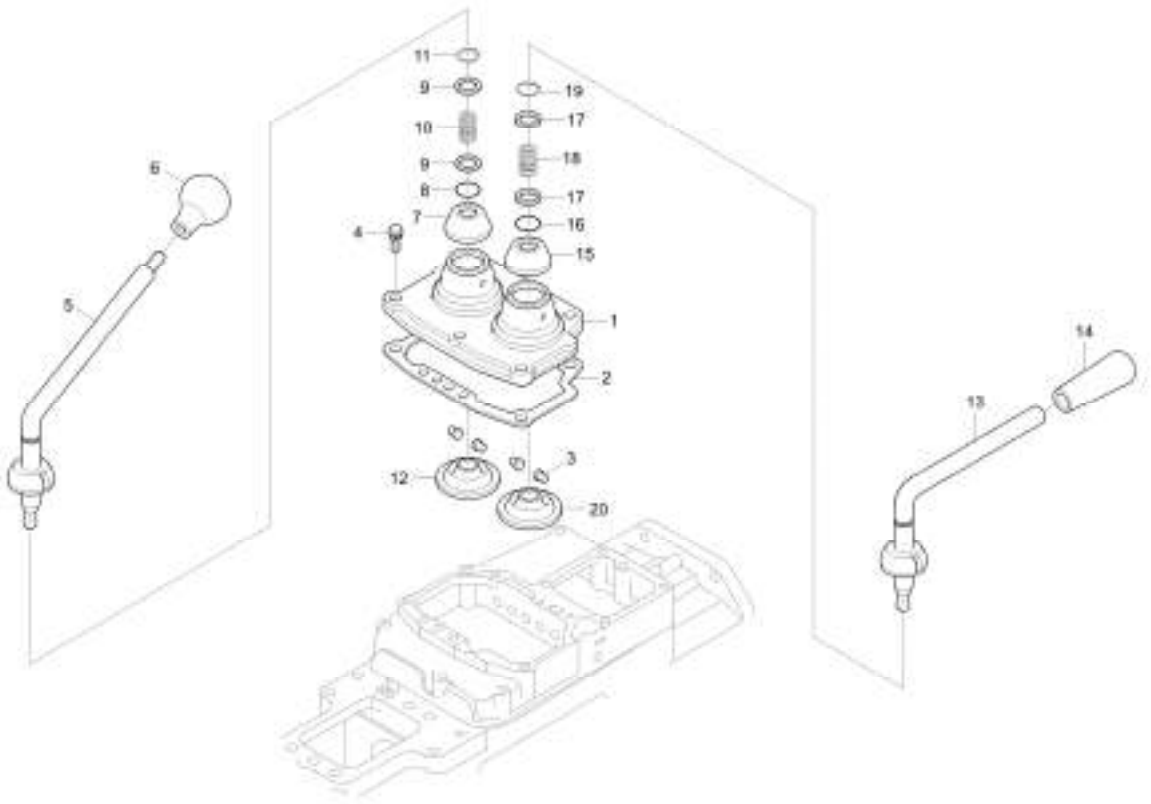

A : LK2554

No.	Part Number	Description	Qty A	Qty B	Qty C	Qty D	Qty E	I.C	Remark
1	T2265-23711	PLATE, SHIFT	1						
1	37150-2371-4	BASE,SPEED CHANGE	1					<----->	2KG
2	34150-2372-2	PACKING	1						T0.5
3	34150-2374-2	PIN, FIXING	4						DIA6
4	01123-50832	BOLT, WASHER	3						HEX12*43
5	37150-2381-2	LEVER, MAIN SHIFT obs v	1						DIA13
6	32150-2386-2	GRIP, MAIN SHIFT LEVER	1						
7	34150-2394-1	SHIELD, OIL	1						T1.2
8	04811-00120	O RING	1						DIA11.8
9	32240-2395-1	WASHER	2						T1.0
10	32240-2392-1	SPRING, SHIFT LEVER	1						DIA1.8
11	31220-2393-2	SNAP RING	1						DIA2.0
12	T4124-2387-1	SHIELD	1						
12	T4240-23871	SHIELD	1					<------	
13	37150-2485-5	LEVER,P.T.O	1						
14	84612-2492-2	GRIP, LEVER	1						
15	34150-2394-1	SHIELD, OIL	1						T1.2
16	04811-00120	O RING	1						DIA11.8

----> Old replace New <---- New replace Old <-X-> Not interchangeable
<---> Interchangeable <-O-> Interchangeable with another part(s)
* Please place an order assy(*)

https://tractormanualz.com/

LK2554-T430A

MAIN SHIFT LEVER GROUP

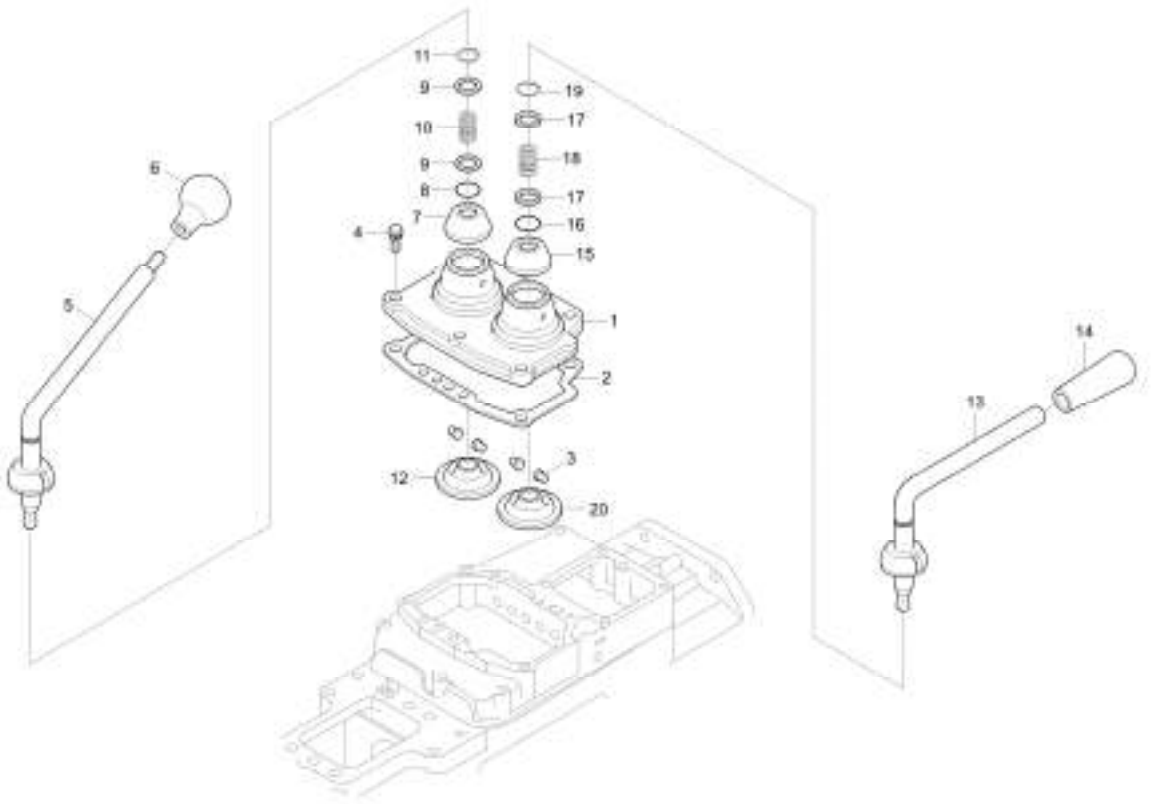

A : LK2554

No.	Part Number	Description	Qty A	Qty B	Qty C	Qty D	Qty E	I.C	Remark
17	32240-2395-1	WASHER	2						T1.0
18	32240-2392-1	SPRING, SHIFT LEVER	1						DIA1.8
19	31220-2393-2	SNAP RING	1						DIA2.0
20	T4124-2387-1	SHIELD	1						

----> Old replace New <---- New replace Old <-X-> Not interchangeable
<---> Interchangeable <-O-> Interchangeable with another part(s)
* Please place an order assy(*)

https://tractormanualz.com/

L2203-T440A

SHIFT SYSTEM 2 GROUP

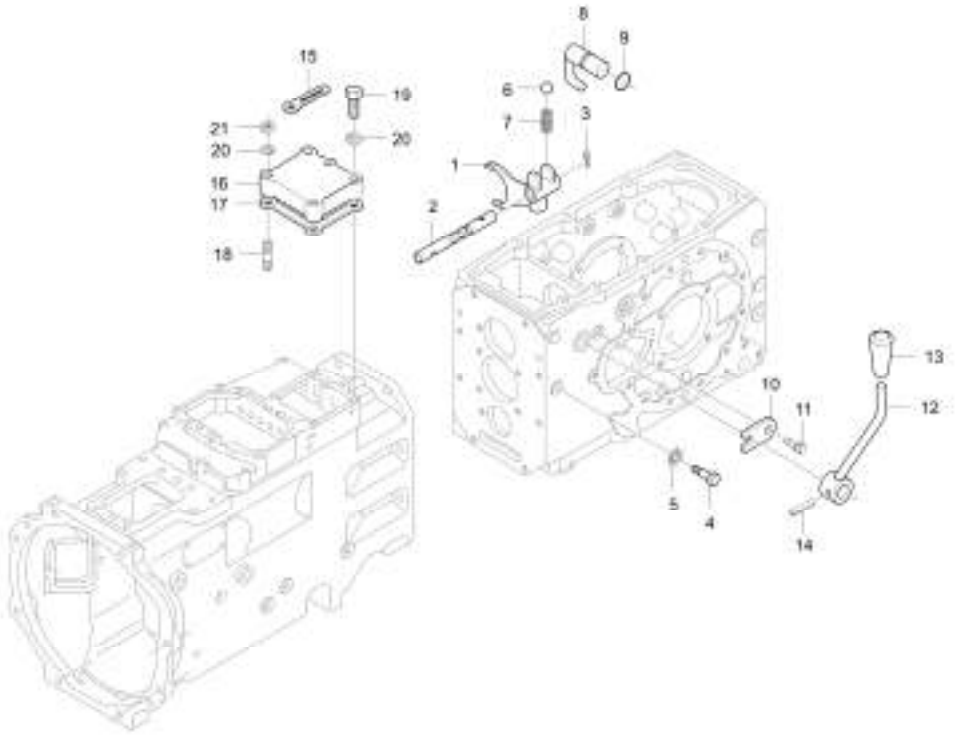

A : LK2554

No.	Part Number	Description	Qty A	Qty B	Qty C	Qty D	Qty E	I.C	Remark
1	37150-2411-2	FORK, SUBMISSION	1						240G
2	37150-2413-4	ROD, SUBMISSION FORK	1						DIA13*144
3	05515-51200	PIN, SNAP	1						DIA12
4	37150-2312-3	BOLT, CLAMPING	1						HEX12*49
5	04717-00800	SEAL WASHER	1						M8
6	07715-01605	STEEL BALL	1						DIA7.9375
7	62331-1853-2	SPRING v	1						DIA1.4
8	37150-2431-1	ARM, SUBMISSION	1						
9	04811-00150	O RING	1						DIA14.8
10	34150-2435-1	STOPPER	1						T2.6*20*43
11	01123-50816	Hex Head Cap Screw	1						M8XP1.25
12	85726-2443-1	LEVER, SUBMISSION	1						
13	76KP-1737-1	GRIP	1						
14	05411-00628	PIN, SPRING	1						
15	37150-3447-1	CLAMP	2						T0.5
16	84612-9102-1	COVER	1						700G
17	34650-5933-2	PACKING	1						T0.5*100*108
18	01513-50828	BOLT, STUD	3						M8XP1.25

----> Old replace New <---- New replace Old <-X-> Not interchangeable
<---> Interchangeable <-O-> Interchangeable with another part(s)
* Please place an order assy(*)

https://tractormanualz.com/

L2203-T440A

SHIFT SYSTEM 2 GROUP

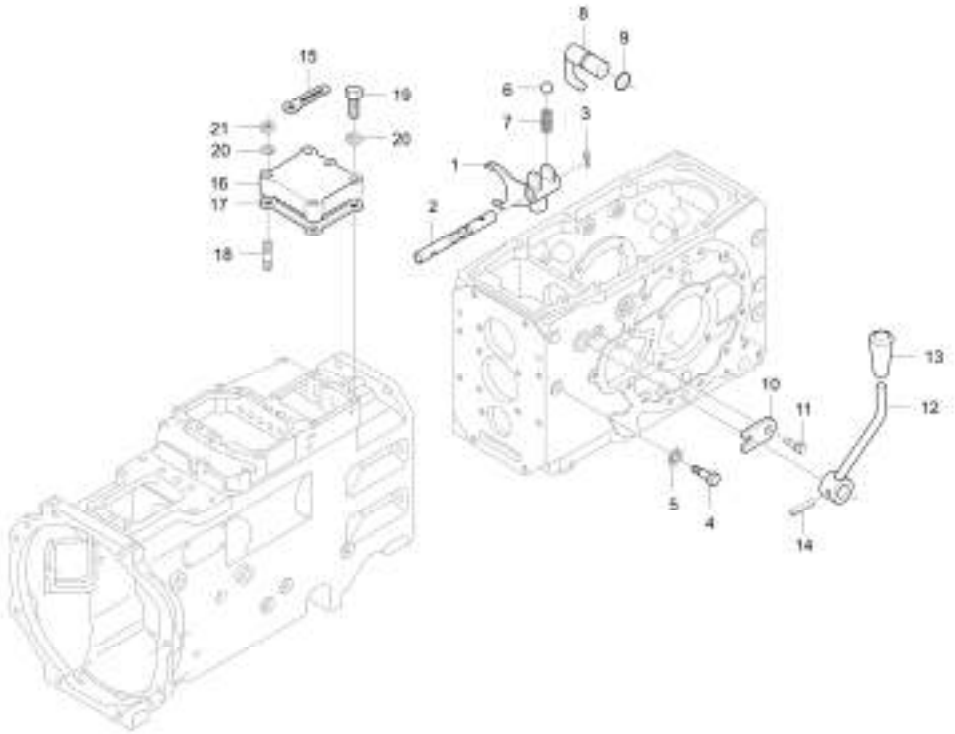

A : LK2554

No.	Part Number	Description	Qty A	Qty B	Qty C	Qty D	Qty E	I.C	Remark
19	01153-50870	BOLT	2						M8*P1.25
20	04512-50080	SPRING WASHER	5						M08
21	02114-50080	NUT v	3						M8*P1.25

----> Old replace New
<---- New replace Old
<-X-> Not interchangeable
<---> Interchangeable
<-O-> Interchangeable with another part(s)
* Please place an order assy(*)

https://tractormanualz.com/

T220F-T450A

REAR AXLE CASE GROUP

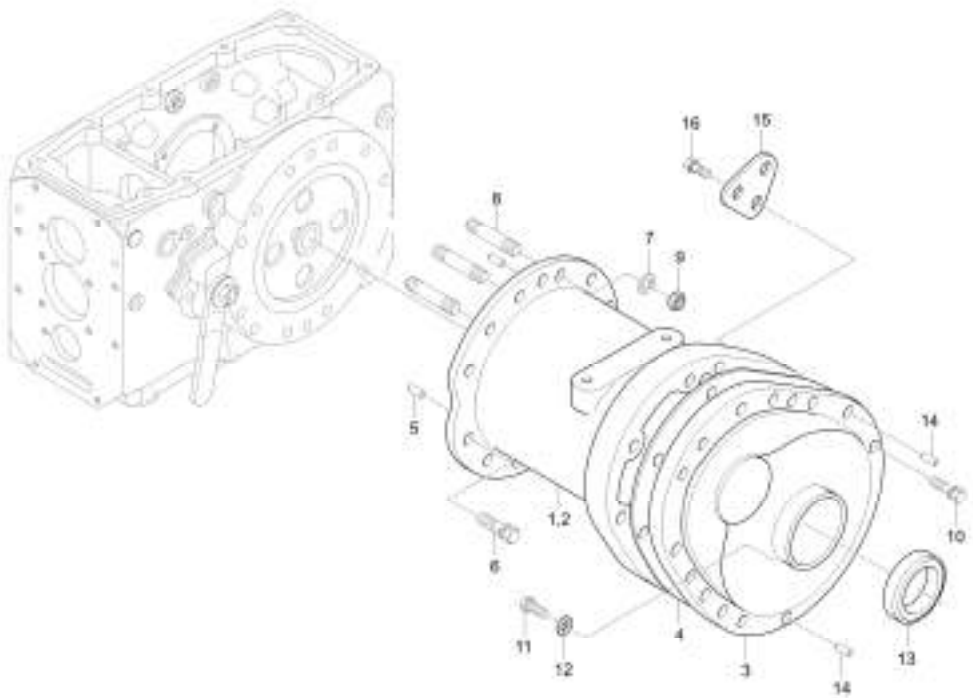

A : LK2554

No.	Part Number	Description	Qty A	Qty B	Qty C	Qty D	Qty E	I.C	Remark
1	84612-9138-0	CASE, AXLE RR RH	1						
2	84612-9139-0	CASE, AXLE RR LH obs v	1						
3	84612-9137-0	COVER,REAR AXLE HOUSING	2						
3	T2240-27332	COVER,REAR AXLE HOUSING	2					<------	
4	84612-2734-1	PACKING	2						T0.5
5	37150-2737-1	PIN, PARALLEL	4						DIA11*21
6	01133-51280	BOLT	18						M12XP1.25
7	04512-50120	SPRING_WASHER v	6						M12
8	T2242-27351	STUD v	6						
9	02176-50120	NUT	6						M12XP1.25
10	01133-51035	WASHER BOLT	22						M10XP1.25
11	06331-35016	PLUG	2						HEX22*25,M 16*P1.5
12	04717-01600	WASHER, SEAL	2						
13	37150-2756-1	SEAL, OIL	2						
14	05012-01025	PIN,STRAIGHT	4						
15	84612-9140-0	HOLDER, CHECK CHAIN	2						T12*90*62
16	01133-51230	BOLT, WASHER	4						M12XP1.25

----> Old replace New <---- New replace Old <-X-> Not interchangeable
<---> Interchangeable <-O-> Interchangeable with another part(s)
* Please place an order assy(*)

https://tractormanualz.com/

L2203-T460A

REAR AXLE GROUP

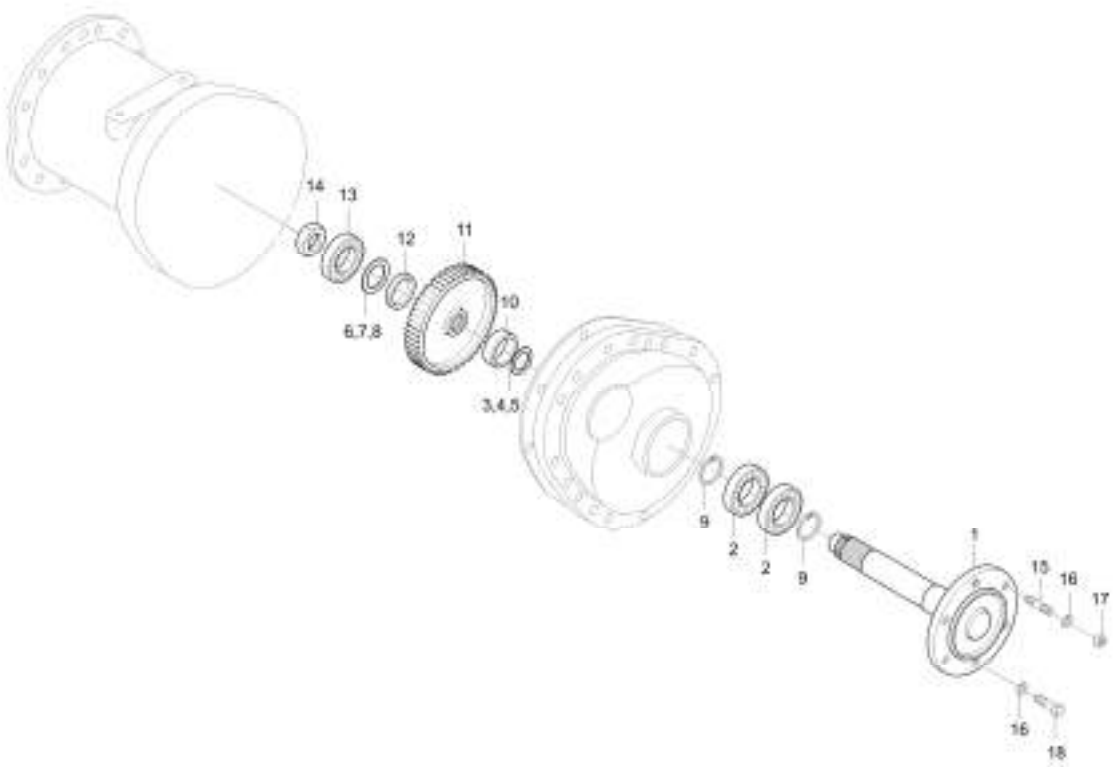

A : LK2554

No.	Part Number	Description	Qty A	Qty B	Qty C	Qty D	Qty E	I.C	Remark
1	84612-9136-4	SHAFT, REAR AXLE	2						
1	T2261-27112	AXLE REAR v	2					<----->	
2	08101-06209	BEARING, BALL v	4						#6209
3	35240-9916-0	SHIM, 0.1	2						T0.1*61*61
4	35240-9917-0	SHIM, 0.2	2						T0.2*61*61
5	35240-9918-0	SHIM, 0.5	2						T0.5*61*61
6	37220-9146-0	SHIM	2						T0.1*90*90
7	37220-9147-0	SHIM	2						T0.2*90*90
8	37220-9148-0	SHIM	2						T0.5*90*90
9	04611-00850	RING,SNAP	4						
10	37220-2714-1	SPACER	2						OD54*T4*18
11	37230-2683-3	GEAR, 49	2						
12	37220-9134-1	SPACER	2						DIA54*21
13	08101-06307	BALL_BEARING	2						DIA35
14	70416-5144-1	NUT, 30	2						HEX46*17
15	01517-51632	STUD v	4						M16*1.5*32
16	04512-50160	SPRING_WASHER	12						M16
17	02076-50160	NUT	4						

----> Old replace New
<---> Interchangeable
* Please place an order assy(*)
<---- New replace Old
<-O-> Interchangeable with another part(s)
<-X-> Not interchangeable

https://tractormanualz.com/

L2203-T460A

REAR AXLE GROUP

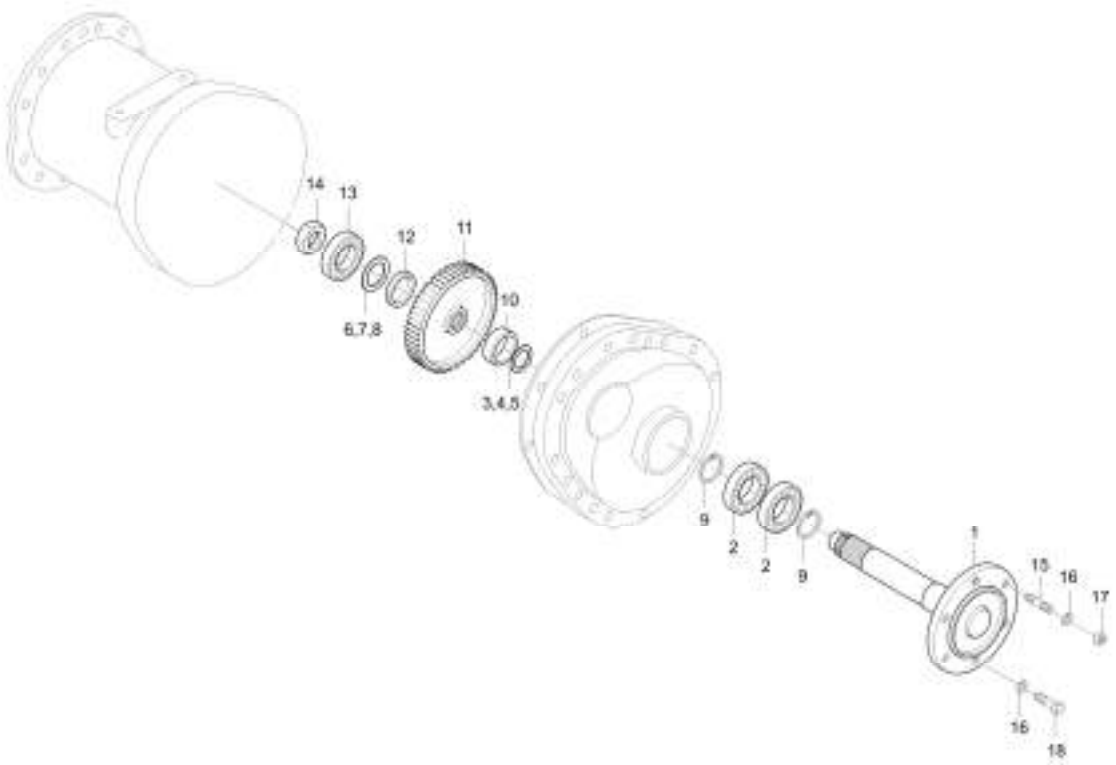

A : LK2554

No.	Part Number	Description	Qty A	Qty B	Qty C	Qty D	Qty E	I.C	Remark
18	01173-51635	BOLT	8						M16*P1.5

----> Old replace New
<---> Interchangeable
* Please place an order assy(*)
<---- New replace Old
<-O-> Interchangeable with another part(s)
<-X-> Not interchangeable

https://tractormanualz.com/

L2203-T170A

FRONT AXLE GROUP

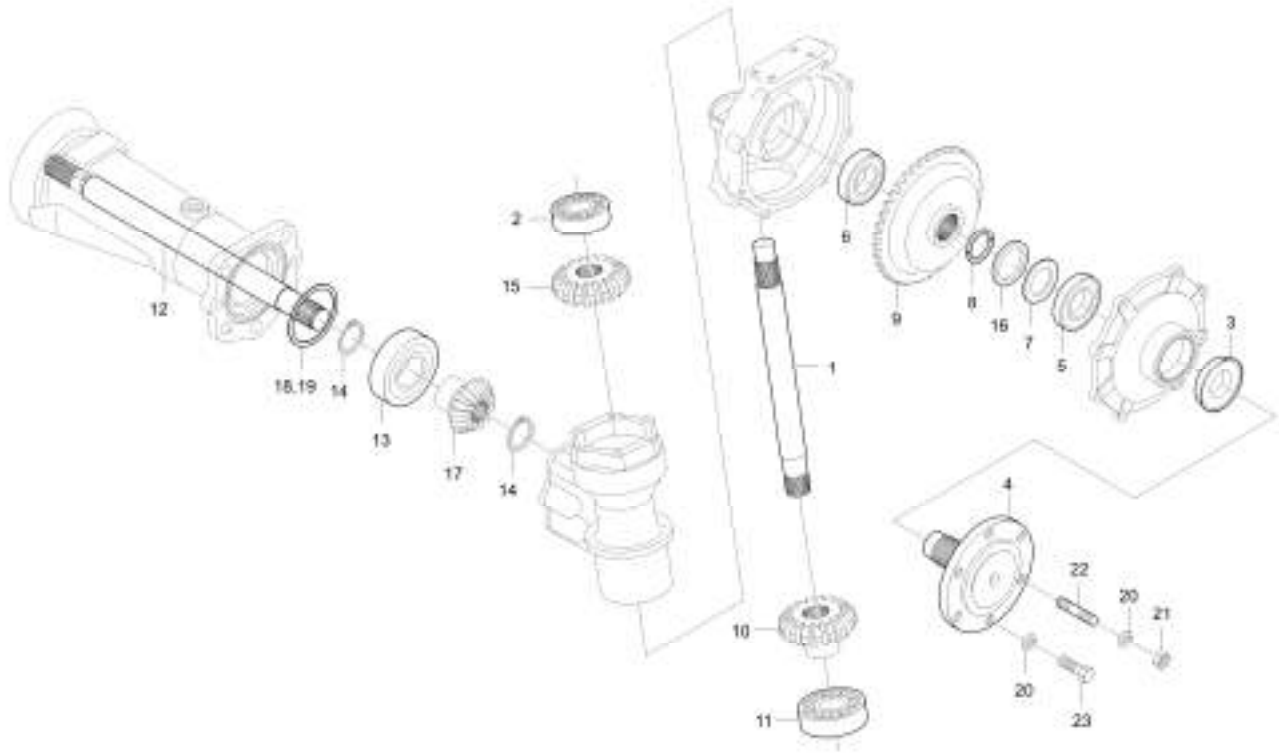

A : LK2554

No.	Part Number	Description	Qty A	Qty B	Qty C	Qty D	Qty E	I.C	Remark
1	T2440-43461	SHAFT,BEVEL GEAR	2						DIA32
2	08711-30305	BEARING, TAPER ROLLER v	2						#30305
3	T2440-43492	SEAL, OIL	2						
4	T2440-43611	FRONT AXLE	2						
5	08101-06207	BEARING BALL	2						DIA35
6	08101-06306	BALL BEARING	2						DIA30
7	37650-4367-0	COLLAR, THRUST	2						T3.0
8	37650-4368-0	PIN	4						DIA5*55
9	37720-4366-0	GEAR, 38 BEVEL	2						
10	37720-4365-0	GEAR, 17 BEVEL	2						
11	08101-06208	BALL BEARING	2						DIA40
12	T2440-43811	SHAFT,DIFF.YOKE	2						DIA32
13	08101-06208	BALL BEARING	2						DIA40
14	04612-00300	SNAP RING	4						DIA30
15	T2440-43821	GEAR,BEVEL 14	2						
16	37720-4369-0	COLLAR	2						DIA55*9
17	T2440-43831	BEVEL GEAR, 14	2						
18	37650-4317-0	SHIM, 0.1	2						T0.1

----> Old replace New
<---> Interchangeable
* Please place an order assy(*)
<---- New replace Old
<-O-> Interchangeable with another part(s)
<-X-> Not interchangeable

https://tractormanualz.com/

L2203-T170A

FRONT AXLE GROUP

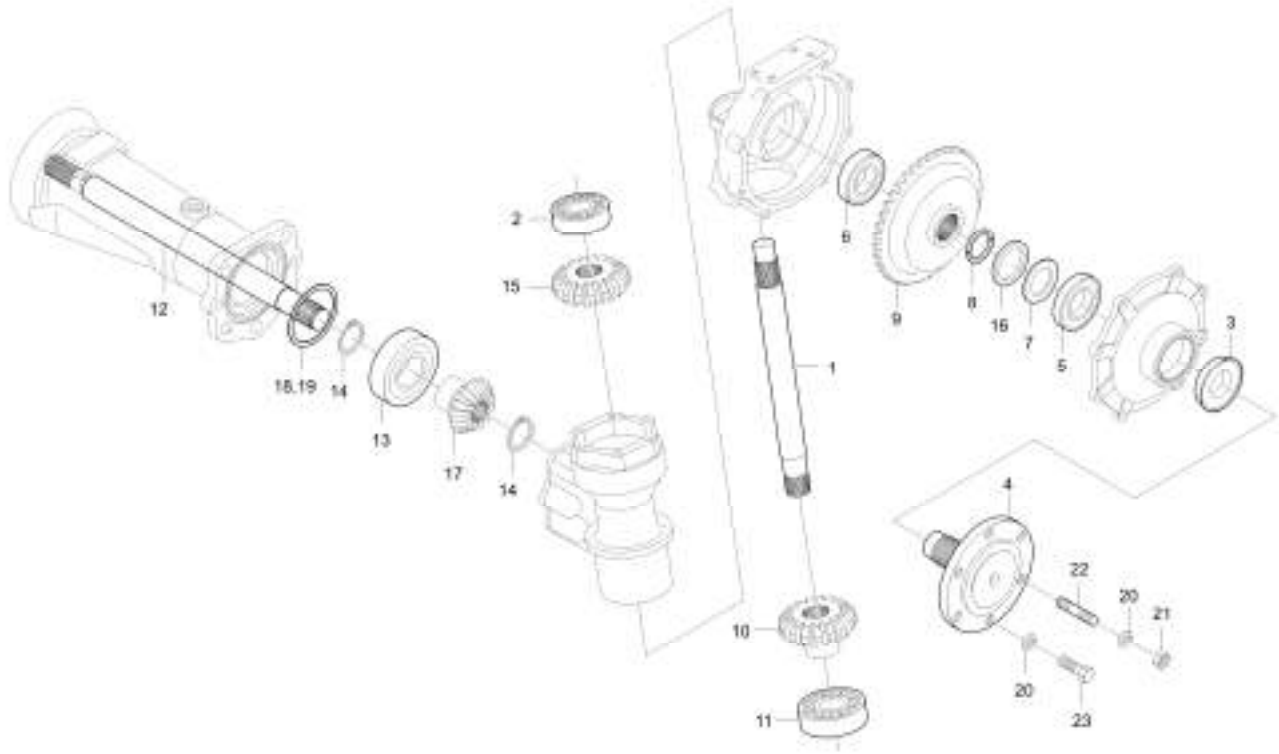

A : LK2554

No.	Part Number	Description	Qty A	Qty B	Qty C	Qty D	Qty E	I.C	Remark
19	37650-4314-0	SHIM, 0.2	4						T0.2
20	04512-50120	SPRING_WASHER v	12						M12
21	02176-50120	NUT	12						M12XP1.25
22	01574-51225	STUD	4						M12XP1.25
23	01173-51225	Hex Head Cap Screw	8						M10*1.25

----> Old replace New <---- New replace Old <-X-> Not interchangeable
<---> Interchangeable <-O-> Interchangeable with another part(s)
* Please place an order assy(*)

https://tractormanualz.com/

LK2552-T175A

FRONT AXLE GROUP

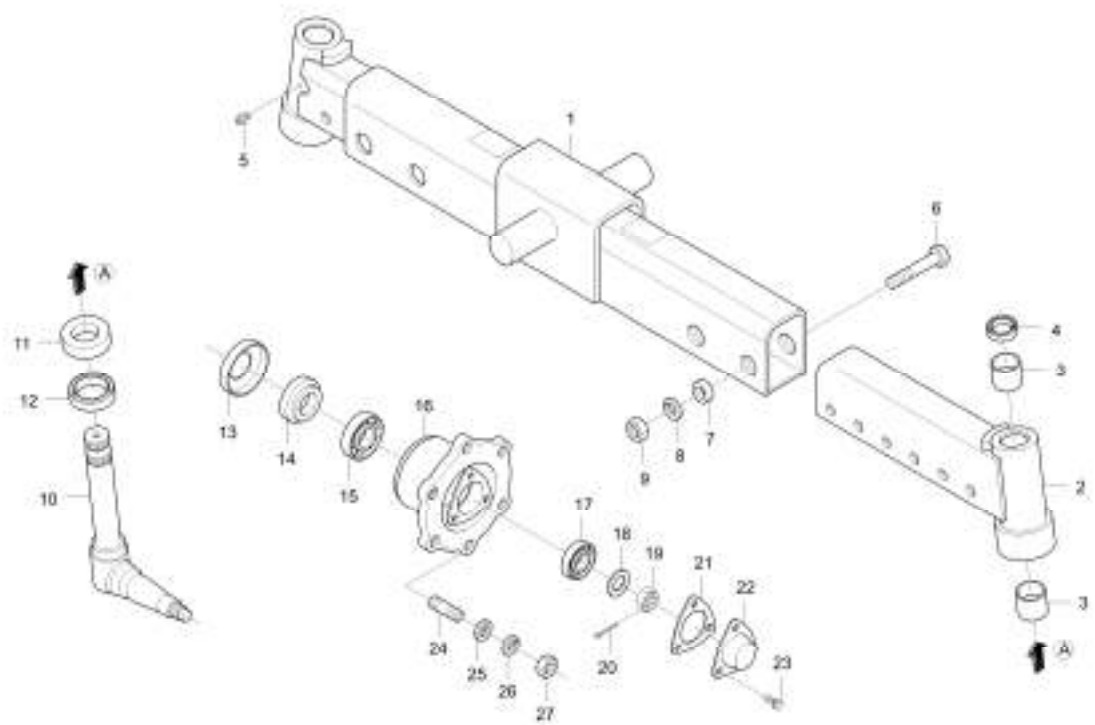

A : LK2554

No.	Part Number	Description	Qty A	Qty B	Qty C	Qty D	Qty E	I.C	Remark
1	T2215-13111	AXLE, FR MID	2						
2	T2515-13123	AXLE, FRONT(OUT)	2						
3	T2420-13131	BUSH obs v	4						JISB1518-SBF1118
4	T2420-13141	SEAL OIL	2						
5	06611-15675	NIPPLE, GREASE v	2						A-M6F
6	01173-51400	BOLT	4						M14XP1.5
7	T2515-13151	COLLAR	4						DIA28
8	04512-50140	SPRING_WASHER	4						M14
9	02176-50140	NUT	4						M14XP1.5
10	T2515-11111	KNUCKLE SHAFT	2						
11	T2515-11512	BEARING THRUST BALL	2						
12	T2515-11431	SEAL, OIL	2						
13	T2420-11481	COVER,DUST	2						T1.6
14	T2515-11331	SEAL,OIL v	2						
15	08721-30206	TAPER ROLLER BEARING	2						
16	T2420-11312	HUB,FRONT WHEEL	2						
17	08721-30205	BEARING, TAPER ROLLER	2						
18	04011-50200	WASHER, PLAIN	2						M20

----> Old replace New <---- New replace Old <-X-> Not interchangeable
<---> Interchangeable <-O-> Interchangeable with another part(s)
* Please place an order assy(*)

https://tractormanualz.com/

LK2552-T175A

FRONT AXLE GROUP

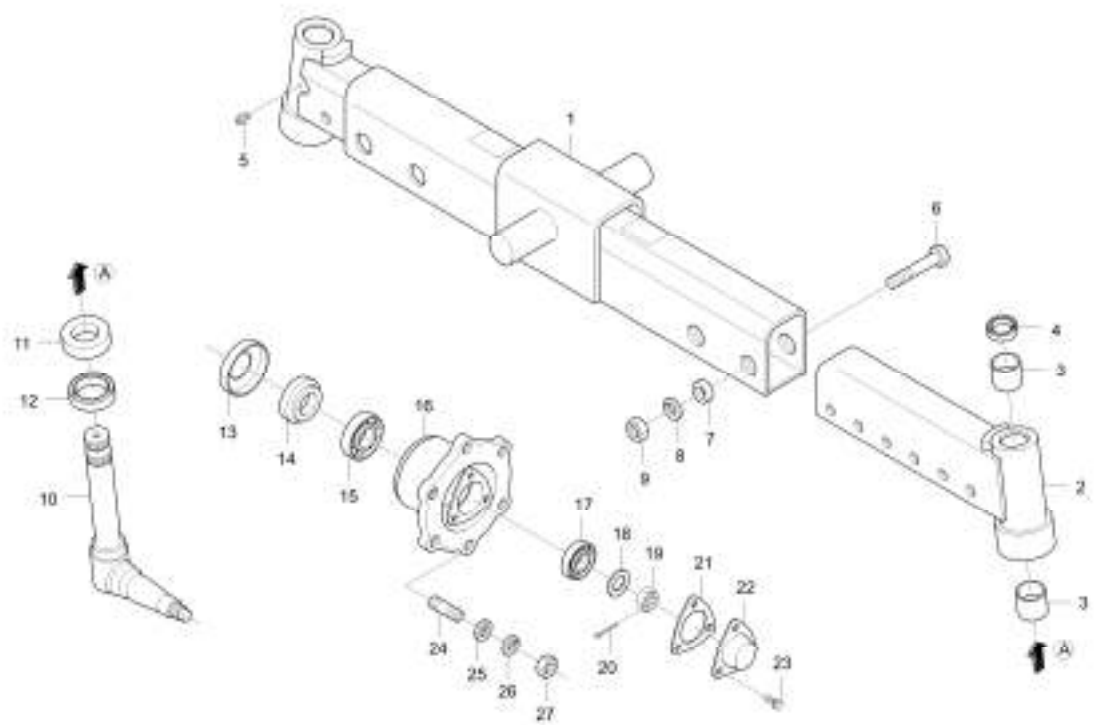

A : LK2554

No.	Part Number	Description	Qty A	Qty B	Qty C	Qty D	Qty E	I.C	Remark
19	02372-50200	OBS-NUT	2						
20	05511-50430	SPLIT_PIN	2						DIA3.6XL30
21	T2420-11361	GASKET obs v	2						
22	T2420-11351	CAP, FRONT WHEEL	2						T1.2
23	01123-50814	BOLT, WASHER	6						M8XP1.25
24	01574-51225	STUD	12						M12XP1.25
25	04014-50120	PLAIN WASHER	12						M12
26	04512-50120	SPRING_WASHER v	12						M12
27	02174-50120	NUT	12						M12*P1.25

----> Old replace New
<---> Interchangeable
* Please place an order assy(*)
<---- New replace Old
<-O-> Interchangeable with another part(s)
<-X-> Not interchangeable

https://tractormanualz.com/

L2203-T180A

FRONT AXLE SUPPORT GROUP

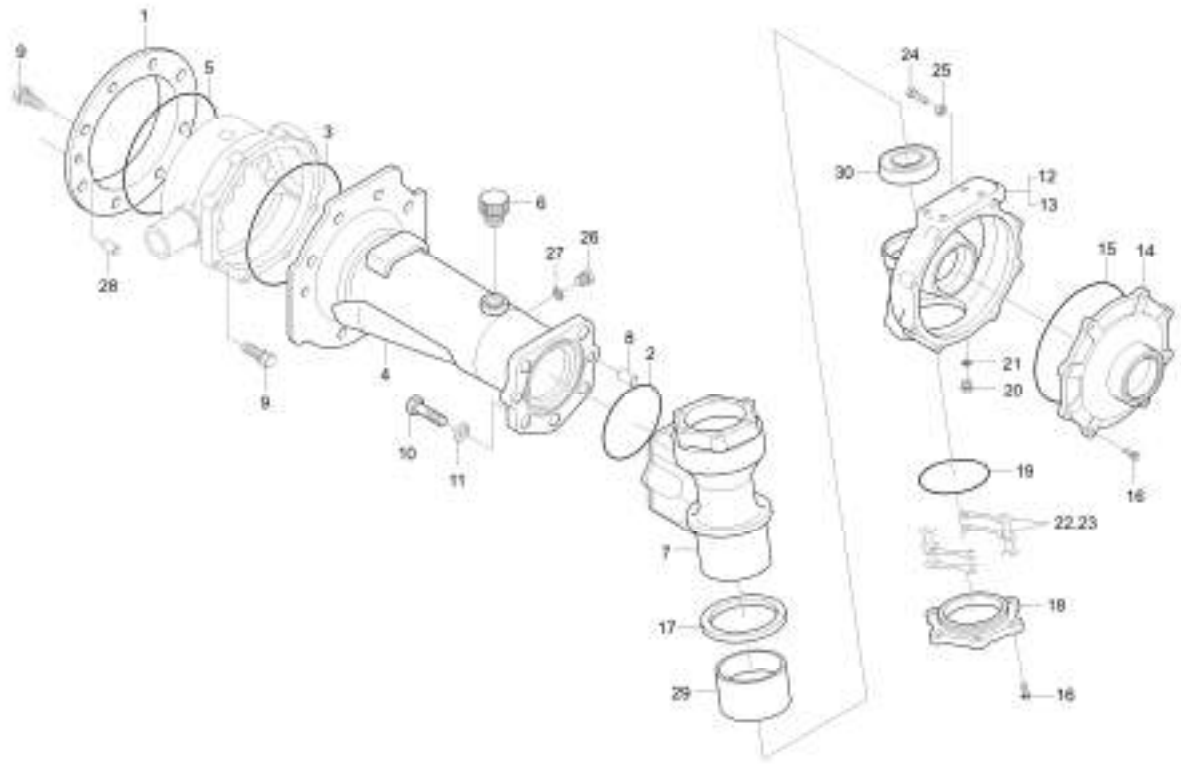

A : LK2554

No.	Part Number	Description	Qty A	Qty B	Qty C	Qty D	Qty E	I.C	Remark
1	T2280-43411	SUPPORT FRONT AXLE	1						
2	04811-50900	O RING	2						G90
3	04811-51300	O RING	1						1A,C135
4	T2280-43431	SUPPORT FRONT AXLE v	1						
5	37650-4344-0	O RING	1						
6	T4240-43102	PLUG,OIL FILLER v	1						
6	T4240-43103	OIL PLUG ASSY v	1					<----->	
7	T2440-43422	CASE,BEVEL GEAR v	2						3.0KG
8	05012-01018	PIN, STRAIGHT	2						DIA10XL18
9	01133-51028	BOLT	16						M10*1.25
10	01173-51435	BOLT v	10						M14XP1.5
11	04512-50140	SPRING_WASHER	10						M14
12	T2440-43511	CASE,FRONT AXLE LH v	1						8.7KG
13	T2440-43541	CASE, FRONT AXLE RH obs v	1						8.7KG
14	37720-4352-0	COVER, FRONT AXLE	2						5KG
15	37720-4355-0	USE 37720-43550 (O-Ring) 03/2005	2						
16	01123-50822	BOLT, WASHER	28						M8XP1.25
17	T2440-43532	SEAL,OIL	2						

----> Old replace New
<---- New replace Old
<-X-> Not interchangeable
<---> Interchangeable
<-O-> Interchangeable with another part(s)
* Please place an order assy(*)

https://tractormanualz.com/

L2203-T180A

FRONT AXLE SUPPORT GROUP

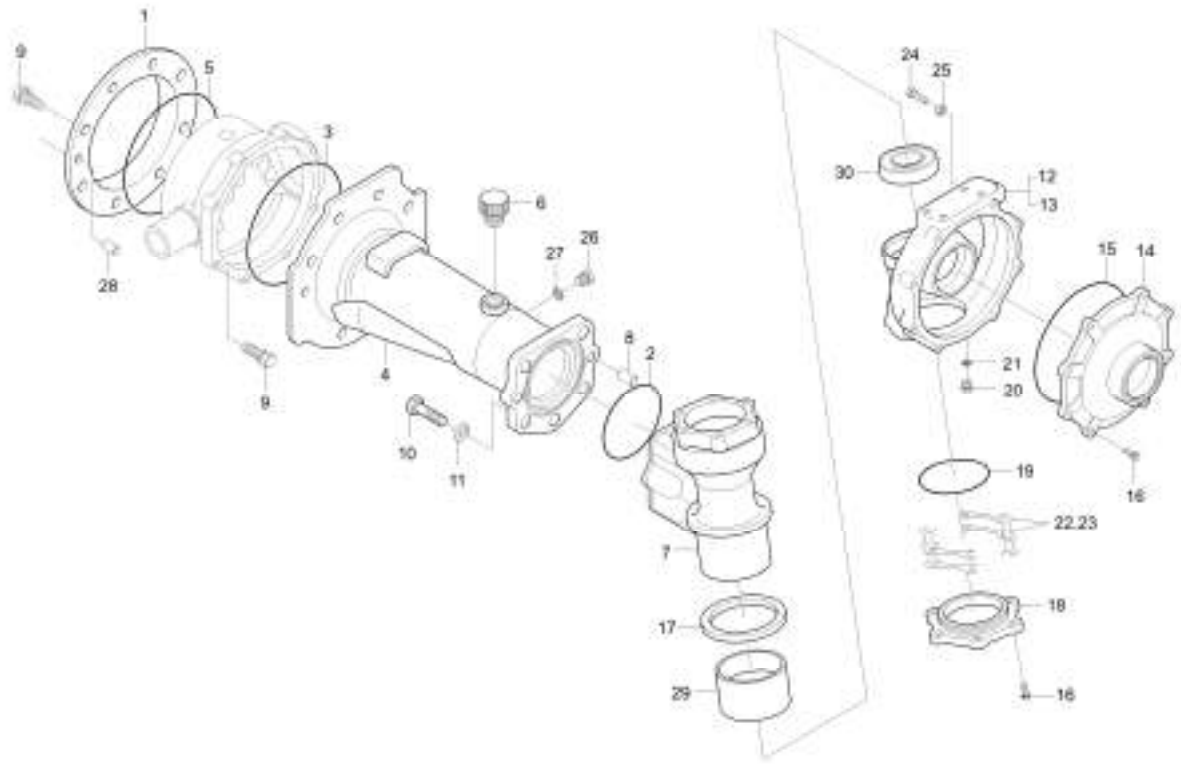

A : LK2554

No.	Part Number	Description	Qty A	Qty B	Qty C	Qty D	Qty E	I.C	Remark
18	T2440-43581	CASE,BEARING obs v	2						0.5KG
19	04811-50900	O RING	2						G90
20	06331-35012	PLUG v	2						M12*P1.25
21	04717-01200	WASHER, SEAL	2						
22	37650-4357-0	SHIM, 0.1	8						T0.1*140*46
23	37650-4359-0	SHIM, 0.2	8						T0.2*140*46
24	37650-4362-0	BOLT	2						HEX22*54
24	01173-51450	BOLT	2					<------	M14*P1.5*50
25	02176-50140	NUT	2						M14XP1.5
26	06331-35010	PLUG	1						M10XP1.25
27	04717-01000	WASHER, SEAL	1						M10
28	37805-4350-1	PIN, PARALLEL	4						
29	T2440-43483	BUSH	2						
30	08401-51109	BEARING,THRUST BALL	2						

----> Old replace New
<---- New replace Old
<-X-> Not interchangeable
<---> Interchangeable
<-O-> Interchangeable with another part(s)
* Please place an order assy(*)

https://tractormanualz.com/

L2203-T190A

DIFF GEAR CASE GROUP

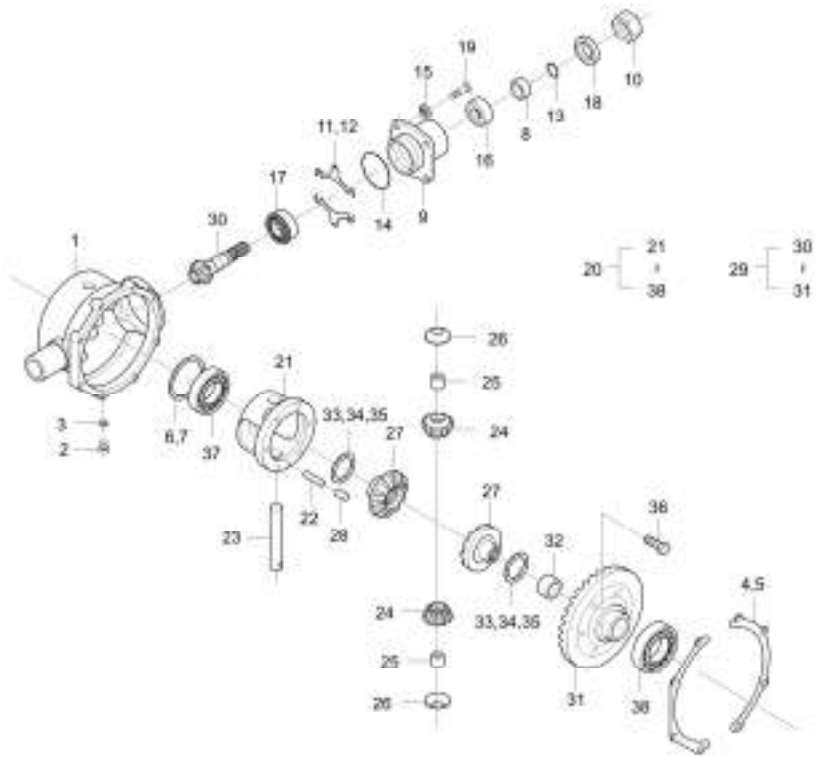

A : LK2554

No.	Part Number	Description	Qty A	Qty B	Qty C	Qty D	Qty E	I.C	Remark
1	T2280-43111	CASE DIFFERENTIAL	1						9KG
2	06331-35012	PLUG v	1						M12*P1.25
3	04717-01200	WASHER, SEAL	1						
4	37650-4316-0	SHIM, 0.1	4						T0.1*235*81
5	37650-4313-0	SHIM, 0.2	4						T0.2*235*81
6	37650-4317-0	SHIM, 0.1	2						T0.1
7	37650-4314-0	SHIM, 0.2	2						T0.2
8	37650-4322-1	COLLAR, OIL SEAL	1						DIA35*12
8	37650-4322-2	COLLAR, OIL SEAL	1					<----->	
9	84612-4323-1	CASE,PINION BEARING	1						1.8KG
10	31220-2234-0	NUT	1						HEX32*16
11	37650-4328-0	SHIM, 0.1	4						T0.1*100*20
12	37650-4327-0	SHIM, 0.2	6						T0.2*100*20
13	04811-00240	O RING	1						P24
14	04811-50700	O RING	1						
15	04512-50080	SPRING WASHER	4						M08
16	08711-30205	BEARING, TAPER ROLLER	1						#30205
17	08711-30305	BEARING, TAPER ROLLER v	1						#30305

----> Old replace New
<---> Interchangeable
* Please place an order assy(*)
<---- New replace Old
<-O-> Interchangeable with another part(s)
<-X-> Not interchangeable

https://tractormanualz.com/

L2203-T190A

DIFF GEAR CASE GROUP

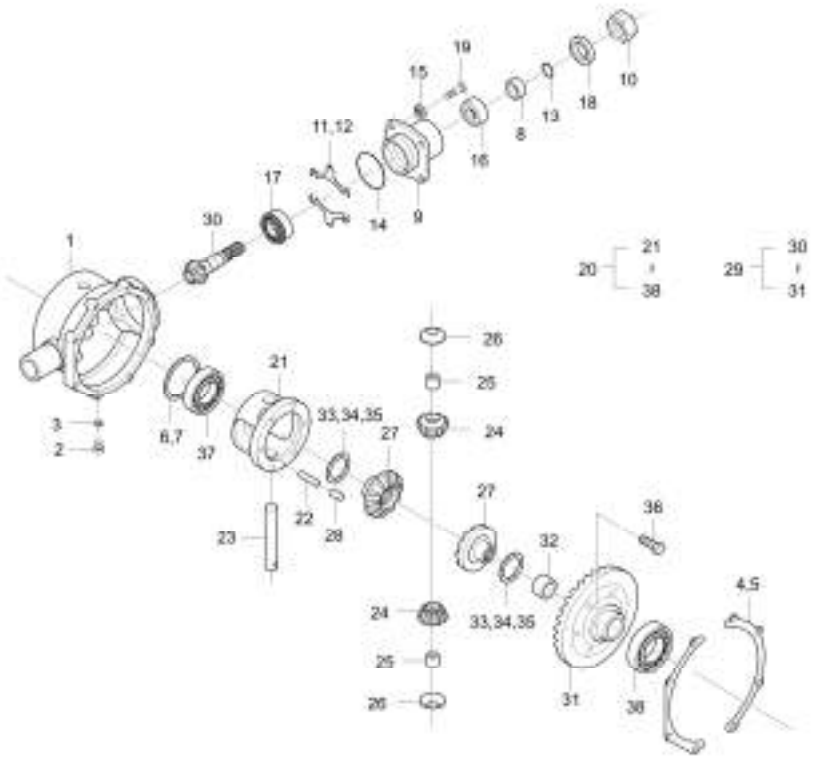

A : LK2554

No.	Part Number	Description	Qty A	Qty B	Qty C	Qty D	Qty E	I.C	Remark
18	09500-35528	SEAL,OIL	1						DIA35
19	01153-50822	BOLT	4						M8XP1.25
20	37650-4490-0	SUNROOF ASSY	1						
20	T2240-44902	FRONT DIFFERENTIAL assy	1					<----->	
20	T2240-44903	ASSY, FRONT DIFF SYSTEM obs v	1					<----->	
21	38440-4331-4	CASE, DIFFERENTIAL SYSTEM	1						3.1KG
22	37650-4332-1	PIN	1						DIA6*35
23	37650-4333-4	SHAFT, DIFFERENTIAL PINION	1						DIA21*129
24	31220-2635-9	PINION	2						
24	T2240-26352	PINION DIFFERENTIAL obs v	2					<----->	
24	T2240-26353	PINION, DIFFERENTIAL	2					<----->	
25	31220-2636-7	BUSH	2						
26	31220-2639-2	WASHER, DIFF PINION	2						
27	38440-4498-1	GEAR, DIFF RH	2						
28	38440-4388-1	PIN, PARALLEL	2						DIA13*22
29	T2240-43201	COMP.GEAR,SPIRAL BEVEL	1						
30	35250-4321-0	PINION,SPIRAL BEVEL	1						
31	38440-4335-4	GEAR,SPIRAL BEVEL 34	1						

----> Old replace New <---- New replace Old <-X-> Not interchangeable
<---> Interchangeable <-O-> Interchangeable with another part(s)
* Please place an order assy(*)

https://tractormanualz.com/

L2203-T190A

DIFF GEAR CASE GROUP

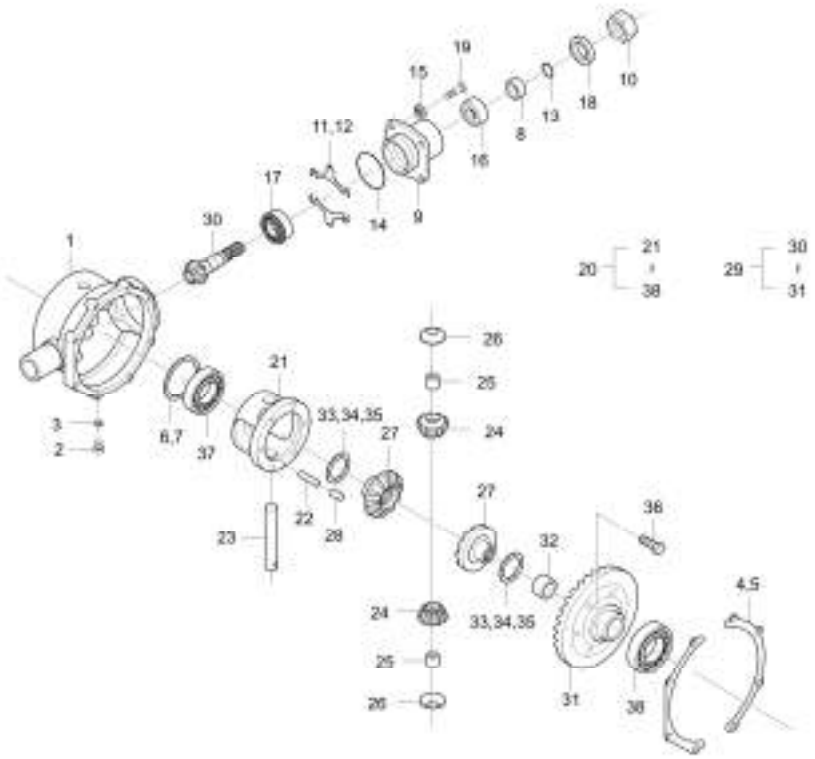

A : LK2554

No.	Part Number	Description	Qty A	Qty B	Qty C	Qty D	Qty E	I.C	Remark
32	37650-4336-1	BUSH v	1						
33	37150-2648-1	WASHER, DIFF	2						T1.7
34	31220-2648-3	WASHER, DIFF	2						T1.5
35	31220-2649-3	WASHER, DIFF	2						T1.6
36	37800-4387-1	BOLT	6						M10xP1.25
37	08101-06011	BEARING, BALL v	1						#6011
38	08101-06010	BALL BEARING	1						#6010

----> Old replace New
<---- New replace Old
<-X-> Not interchangeable
<---> Interchangeable
<-O-> Interchangeable with another part(s)
* Please place an order assy(*)

https://tractormanualz.com/

L2601-T240A

FRONT AXLE FRAME GROUP

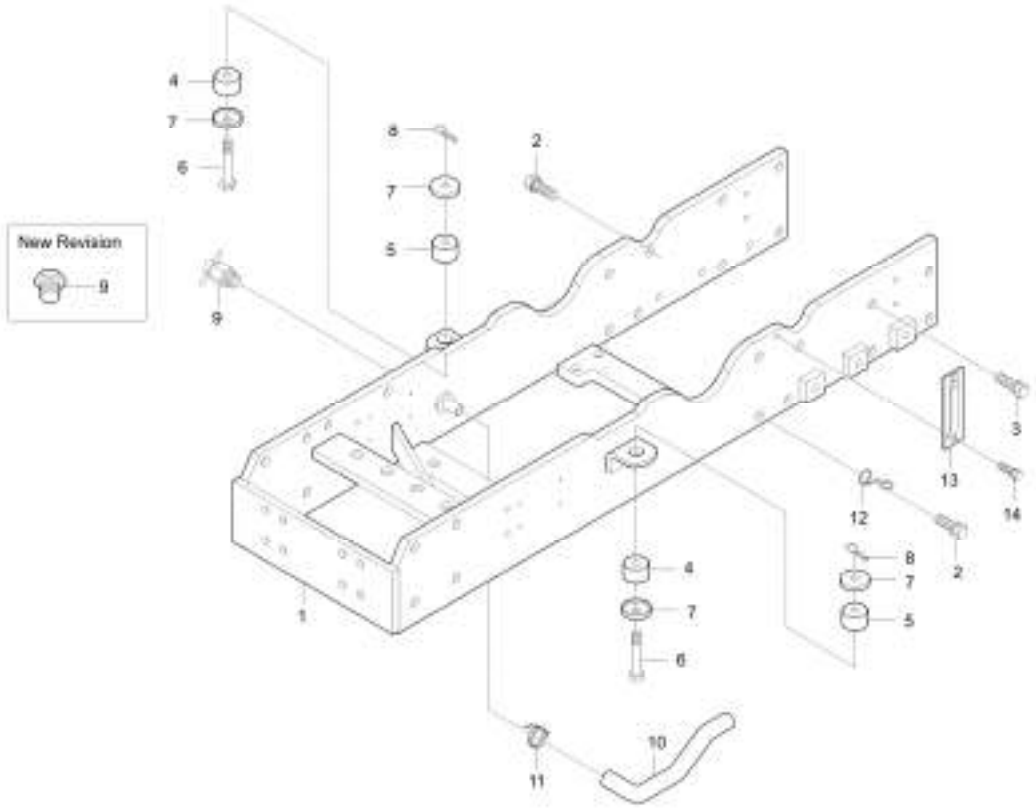

A : LK2554

No.	Part Number	Description	Qty A	Qty B	Qty C	Qty D	Qty E	I.C	Remark
1	T2547-44713	TRK - FRAME,FRONT AXLE	1						
2	01173-51235	BOLT	15						M12P1.25*35
2	01133-51235	WASHER BOLT	15					<------	M12XP1.25
3	01173-51030	Hex Head Bolt, 10mmx30mm	1						M10XP1.25
3	01133-51030	BOLT, WASHER	1					<------	M10XP1.25
4	15111-7218-1	CUSHION, RADIATOR	2						
5	15111-7219-1	CUSHION, RADIATOR	2						
6	15108-7238-2	BOLT, RADIATOR	2						M10*60*P1.25
7	15111-7220-2	WASHER	2						T1.6
7	T2240-13202	WASHER, RADIATOR	4					<------	T1.6
8	05515-51000	CIR CLIP	2						DIA10
9	14412-7311-2	COCK, DRAIN	1						
9	76KD-0121-2	COCK, DRAIN	1					<------	
9	06311-45030	PLUG	1					<------	
10	38325-1351-1	HOSE, DRAIN	1						
10	T2540-13511	HOSE,DRAIN	1					<------	
11	15109-7336-4	CLAMP, HOSE obs v	2						철 사19#
11	E5700-73361	BAND, HOSE obs v	2					<------	

----> Old replace New
<---> Interchangeable
* Please place an order assy(*)
<---- New replace Old
<-O-> Interchangeable with another part(s)
<-X-> Not interchangeable

https://tractormanualz.com/

L2601-T240A

FRONT AXLE FRAME GROUP

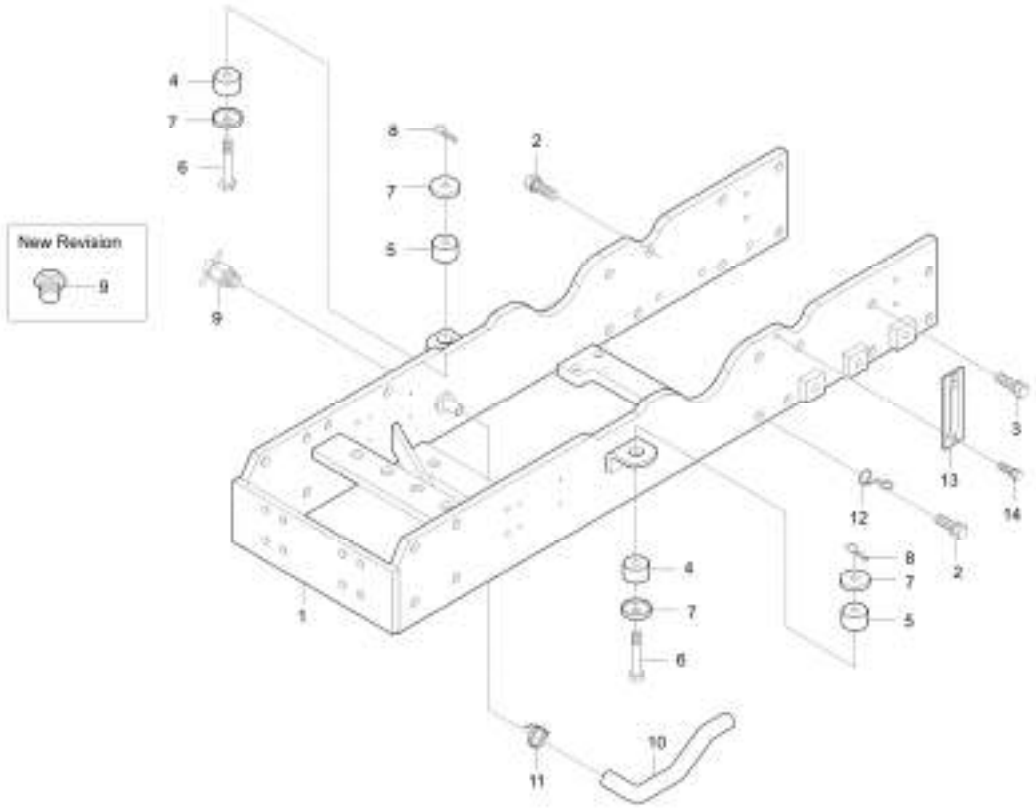

A : LK2554

No.	Part Number	Description	Qty A	Qty B	Qty C	Qty D	Qty E	I.C	Remark
12	15341-0559-1	CLAMP	1						DIA2*106
13	T2567-44721	BRACKET, HARNESS HOLDER	1						
14	01123-50812	BOLT	1						M8P1.25

----> Old replace New
<---> Interchangeable
* Please place an order assy(*)
<---- New replace Old
<-O-> Interchangeable with another part(s)
<-X-> Not interchangeable

https://tractormanualz.com/

LK2552-T215A

FRONT STEERING SYSTEM GROUP

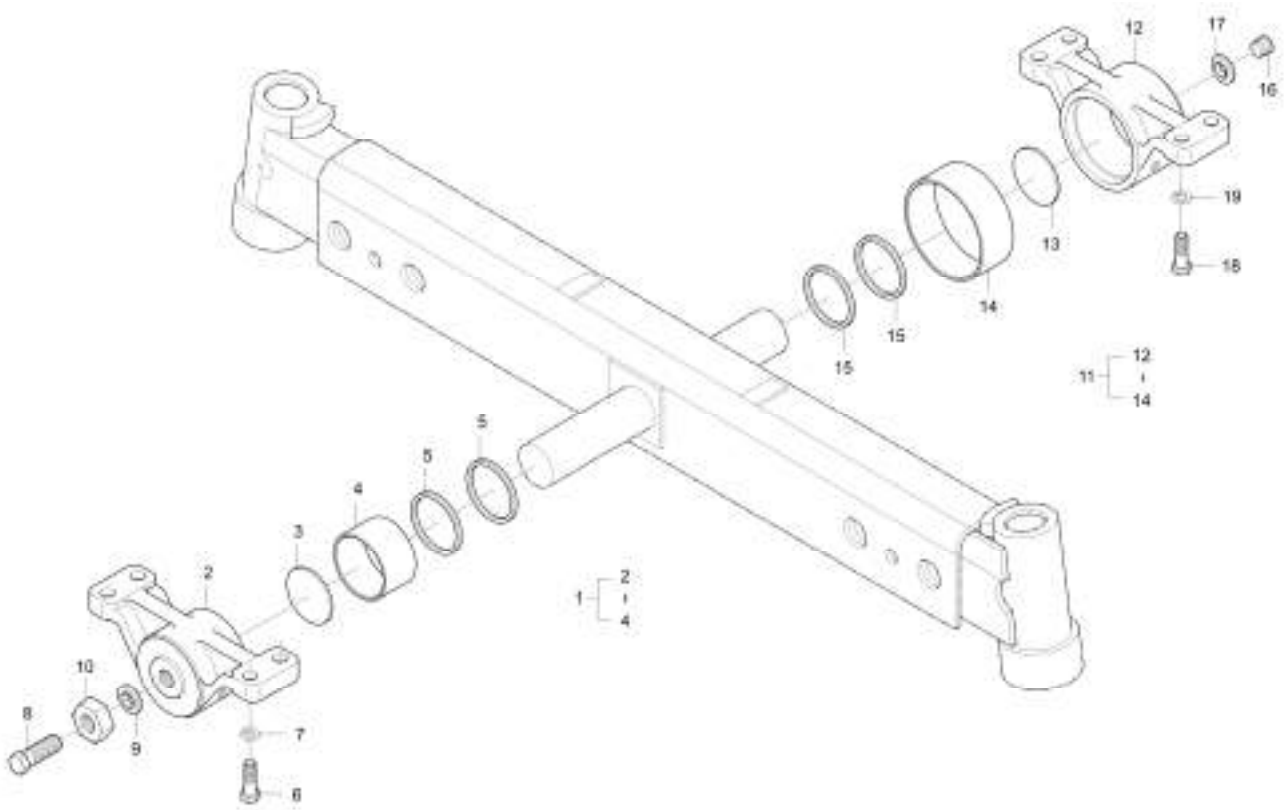

A : LK2554

No.	Part Number	Description	Qty A	Qty B	Qty C	Qty D	Qty E	I.C	Remark
1	T2515-13361	BRACKET ASSY, FR	1						
2	T2515-13671	BRACKET, FRONT	1						
3	T2420-13191	WASHER obs v	1						T6.0
4	08511-04030	BUSH,DU	1						
5	T2420-13161	SEAL,OIL	2						
6	01173-51435	BOLT v	2						M14XP1.5
7	04512-50140	SPRING_WASHER	2						M14
8	38630-4476-1	BOLT,ADJUSTING	1						DIA16
9	38440-4475-1	WASHER SEAL	1						
10	02176-50160	NUT	1						M16XP1.5
11	T2515-13691	BRACKET ASSY, RR	1						
12	T2515-13681	BRACKET,REAR	1						
13	T2420-13191	WASHER obs v	1						T6.0
14	08511-04030	BUSH,DU	1						
15	T2420-13161	SEAL,OIL	2						
16	06331-35012	PLUG v	1						M12*P1.25
17	04717-01200	WASHER, SEAL	1						
18	84612-4453-1	REAMER BOLT	4						M12*1.25

----> Old replace New <---- New replace Old <-X-> Not interchangeable
<---> Interchangeable <-O-> Interchangeable with another part(s)
* Please place an order assy(*)

https://tractormanualz.com/

LK2552-T215A

FRONT STEERING SYSTEM GROUP

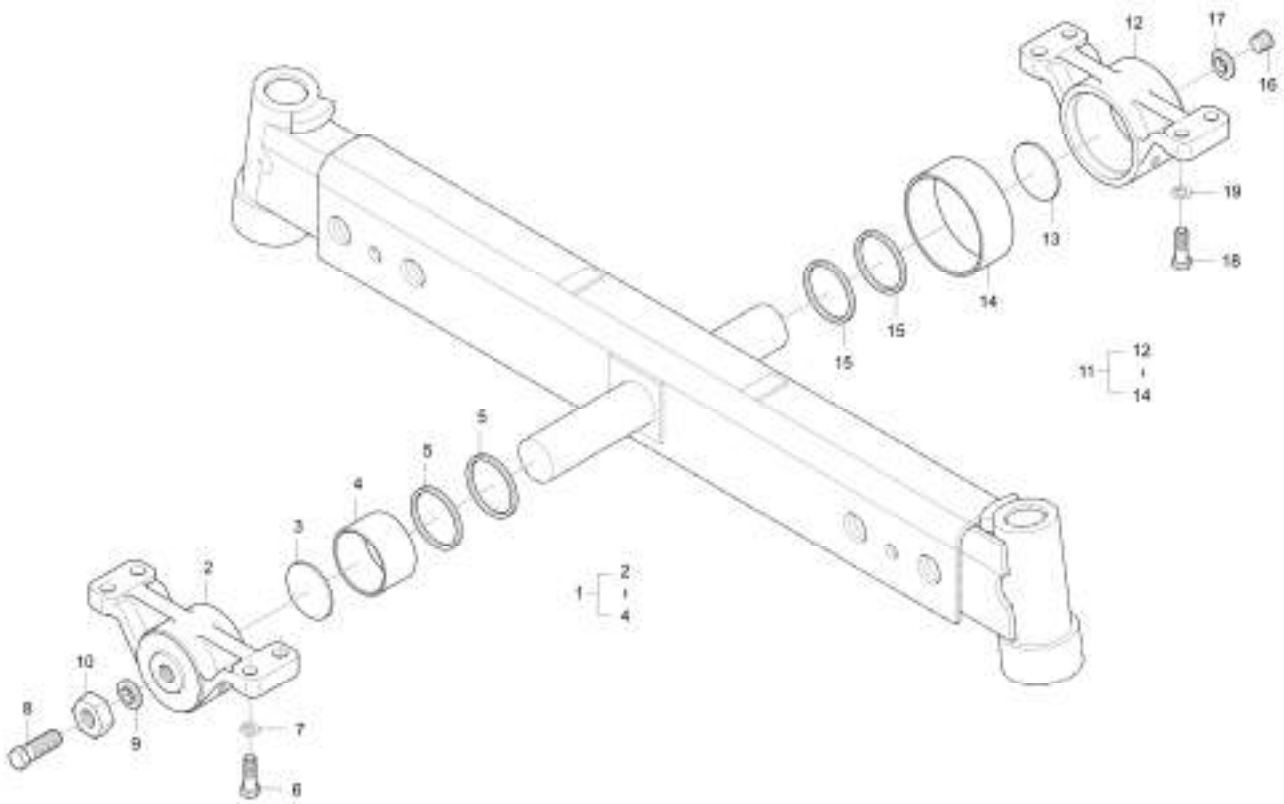

A : LK2554

No.	Part Number	Description	Qty A	Qty B	Qty C	Qty D	Qty E	I.C	Remark
19	04512-50120	SPRING_WASHER v	4						M12

----> Old replace New
<---> Interchangeable
* Please place an order assy(*)
<---- New replace Old
<-O-> Interchangeable with another part(s)
<-X-> Not interchangeable

https://tractormanualz.com/

T260F-T220A

FRONT STEERING SYSTEM GROUP

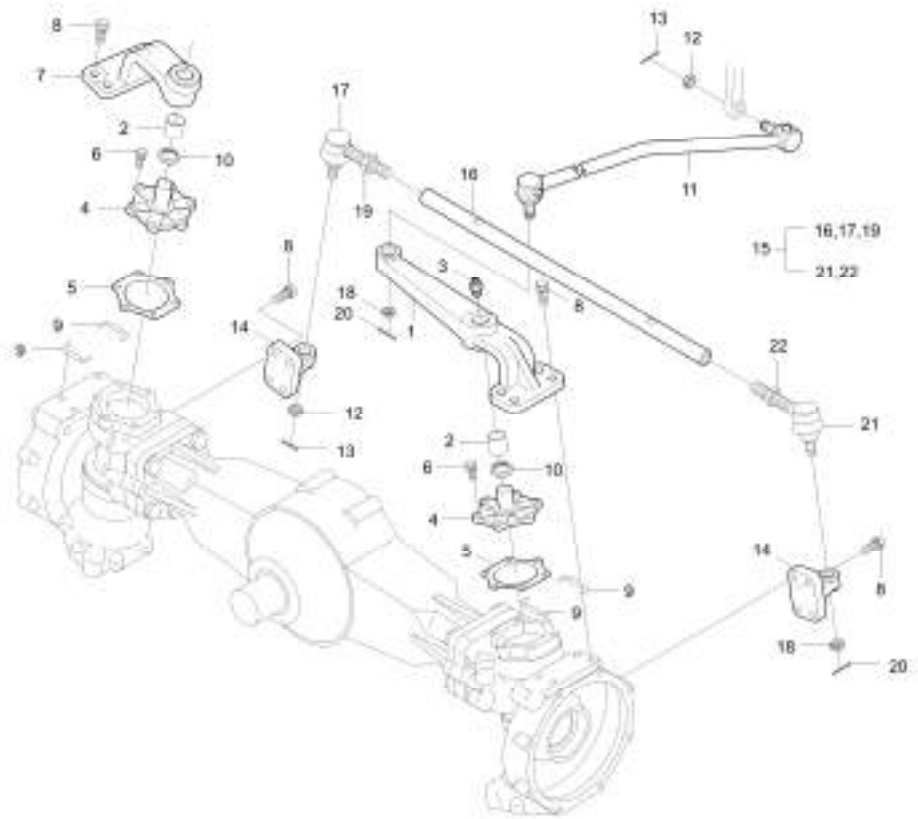

A : LK2554

No.	Part Number	Description	Qty A	Qty B	Qty C	Qty D	Qty E	I.C	Remark
1	T2280-43911	ARM DRAG LINK	1						1.7KG
1	T2280-43912	ARM DRAG LINK v	1					<------	1.7KG
2	T2440-13431	BUSH	2						
3	06611-15675	NIPPLE, GREASE v	2						A-M6F
4	T2440-43921	PIN,KNUCKLE	2						700G
5	T2440-43982	PACKING	2						T0.5
6	01123-50822	BOLT, WASHER	12						M8XP1.25
7	T2440-43951	SUPPORT,KNUCKLE LH obs v	1						1.2KG
7	T2440-43932	SUPPORT, KNUCK LE LH v	1					<------	1.2KG
8	01133-51028	BOLT	16						M10*1.25
9	37650-4386-0	SHIM, 0.2	12						T0.2
10	T2440-43941	SEAL,OIL v	2						
11	T2262-43971	ASSY DRAG LINK	1						
12	34150-1283-0	NUT	2						
13	05511-50325	PIN, SPLIT	2						
14	37650-4394-0	KNUCKLE ARM	2						850G
15	37650-4399-1	TIE ROD ASSY, 2	1						
15	T2240-43992	ASS'Y ROD,TIE	1 423000001 ~					<----->	

----> Old replace New <---- New replace Old <-X-> Not interchangeable
<---> Interchangeable <-O-> Interchangeable with another part(s)
* Please place an order assy(*)

https://tractormanualz.com/

T260F-T220A

FRONT STEERING SYSTEM GROUP

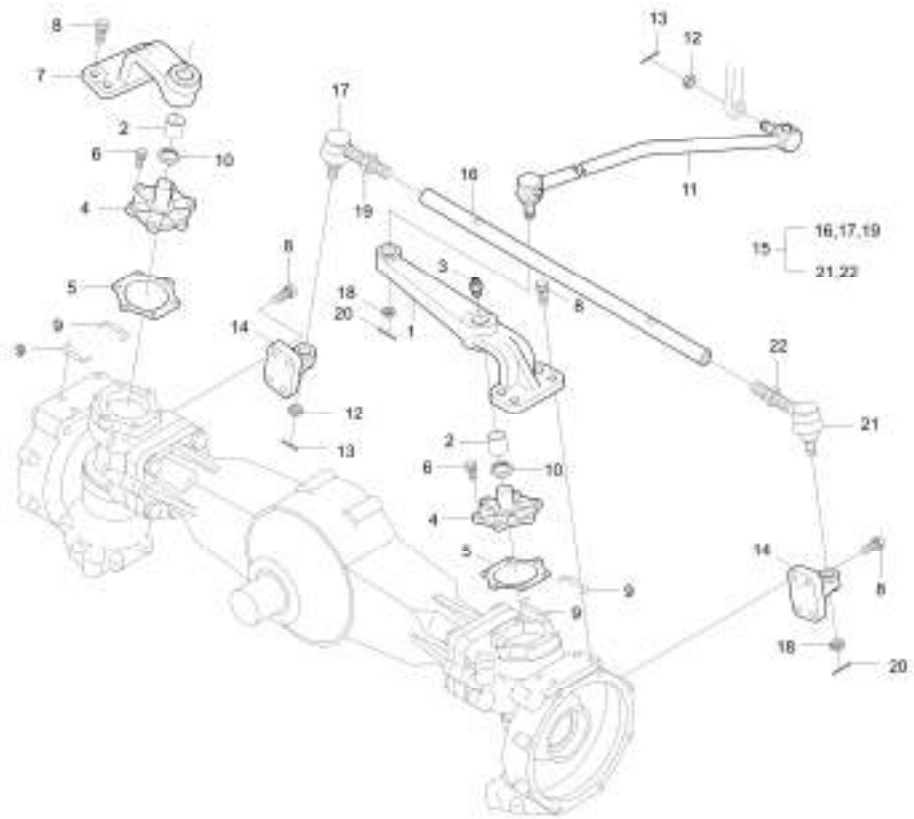

A : LK2554

No.	Part Number	Description	Qty A	Qty B	Qty C	Qty D	Qty E	I.C	Remark
16	37650-4396-1	ROD, TIE 2 v	1						
16	T2240-43962	ROD,TIE v	1					<----->	
17	37650-1260-1	TIE ROD END ASSY, RH	1						
17	T2240-12602	ASSY END, TIE FOD-RH	1					<----->	
18	34150-1283-0	NUT	2						
19	02172-50160	NUT	1						M16*P1.5
20	05511-50325	PIN, SPLIT	2						
21	37650-1270-1	TIE FOD END ASSY, LH dnr v	1						
21	T2240-12702	ASSY END, TIE FOD-LH	1					<----->	
22	37650-1128-1	NUT	1						M16*1.5(좌나사)

----> Old replace New
<---> Interchangeable
* Please place an order assy(*)
<---- New replace Old
<-O-> Interchangeable with another part(s)
<-X-> Not interchangeable

https://tractormanualz.com/

LK2552-T225A

FRONT STEERING SYSTEM GROUP

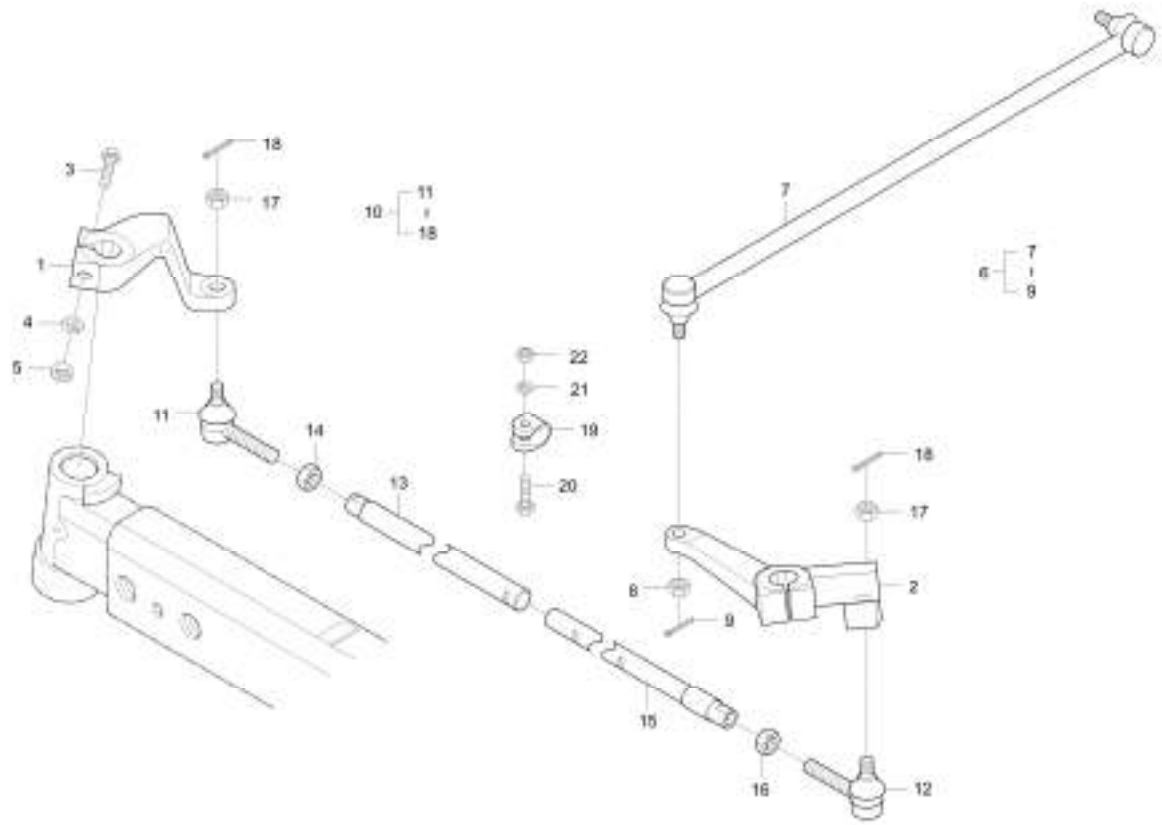

A : LK2554

No.	Part Number	Description	Qty A	Qty B	Qty C	Qty D	Qty E	I.C	Remark
1	T2515-11211	ARM,KNUCKLR(RH)	1						
2	T2515-11221	ARM,KNUCKLR(LH) v	1						
3	01153-51270	BOLT v	2						
4	04512-50120	SPRING_WASHER v	2						M12
5	02176-50120	NUT	2						M12XP1.25
6	T2540-43971	COMP LINK DRAG	1						
7	T2540-66971	ARM, DRAG LINK	1						
8	34150-1283-0	NUT	2						
9	05511-50325	PIN, SPLIT	2						
10	T2515-12501	ASS'Y ROD TIE	1						
11	37650-1260-1	TIE ROD END ASSY, RH	1						
12	37650-1270-1	TIE FOD END ASSY, LH dnr v	1						
13	T2515-12521	ROD, RH TIE	1						
14	02172-50160	NUT	1						M16*P1.5
15	T2515-12531	USE T2515-12501	1						
16	37650-1128-1	NUT	1						M16*1.5(좌나사)
17	34150-1283-1	NUT, SLOTIED	2						
18	05511-50325	PIN, SPLIT	2						

----> Old replace New
<---> Interchangeable
<---- New replace Old
<-O-> Interchangeable with another part(s)
<-X-> Not interchangeable
* Please place an order assy(*)

https://tractormanualz.com/

LK2552-T225A

FRONT STEERING SYSTEM GROUP

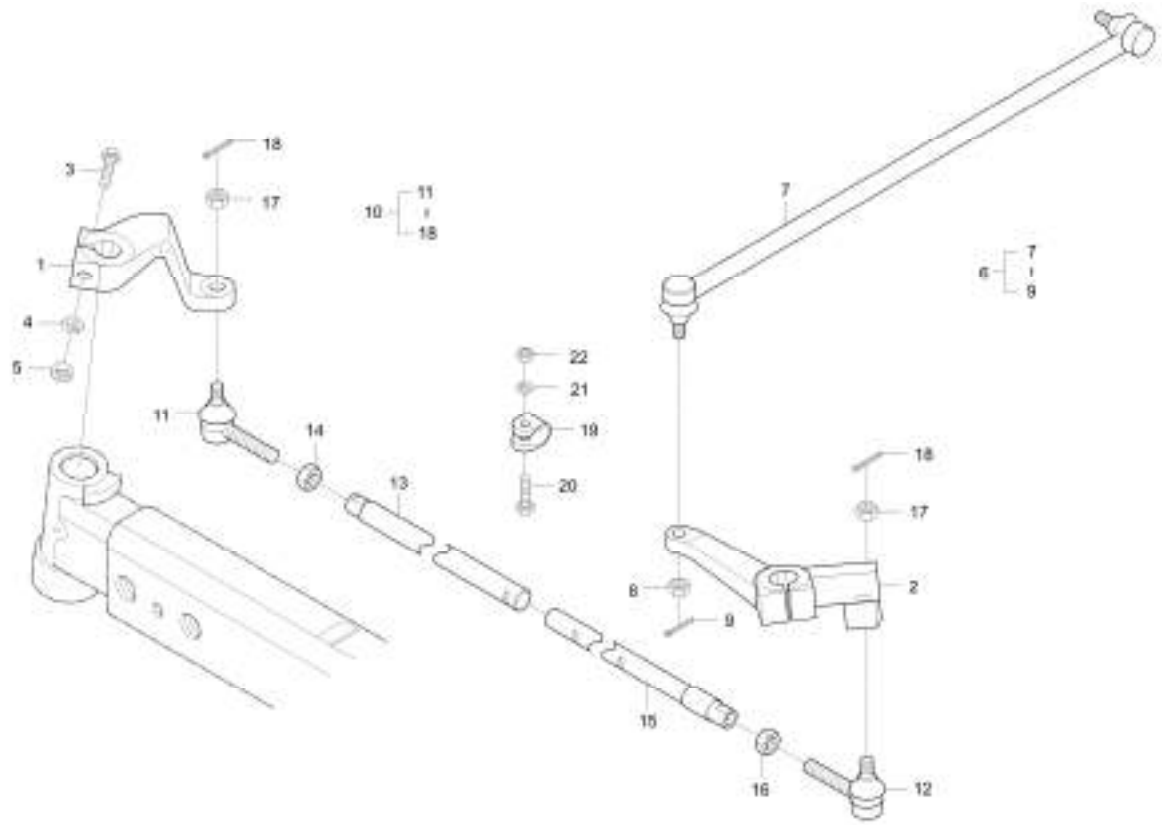

A : LK2554

No.	Part Number	Description	Qty A	Qty B	Qty C	Qty D	Qty E	I.C	Remark
19	T2515-12571	CLAMP,TIE ROD	1						T3.2
20	T2515-12561	BOLT	1						
21	04512-50100	WASHER, SPRING v	1						M10
22	02176-50100	NUT v	1						M10XP1.25

----> Old replace New <---- New replace Old <-X-> Not interchangeable
<---> Interchangeable <-O-> Interchangeable with another part(s)
* Please place an order assy(*)

https://tractormanualz.com/

T260F-T280A

HYDRAULIC TUBE GROUP

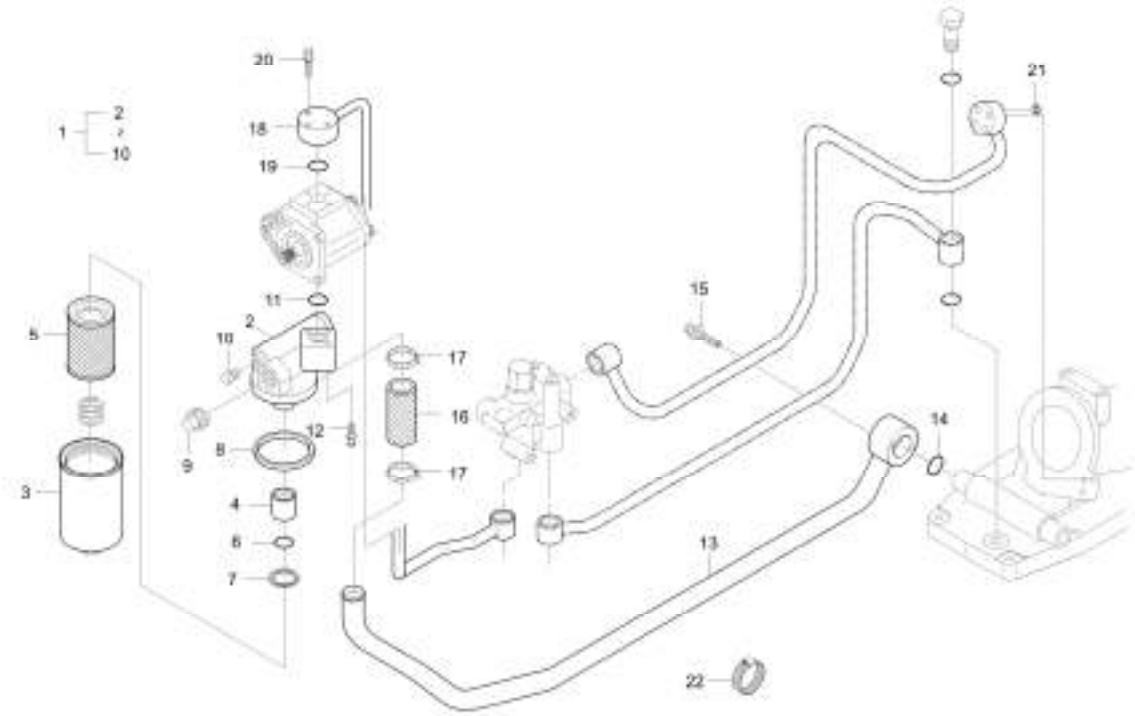

A : LK2554

No.	Part Number	Description	Qty A	Qty B	Qty C	Qty D	Qty E	I.C	Remark
1	T2305-38801	ASS'Y FILTER,OIL v	1						
2	T2305-38711	COVER FILTER	1						
3	T2305-38811	CASE,HYD.FILTER dnr v	1						
4	T2305-38821	MAGNET	4						T1.2
5	T2305-38831	FILTER, HYD ELEMENT ASSY	1						
6	04811-05220	O RING	1						
7	T2305-38851	GROMMET	1						
8	T2305-38871	GASKET	1						
9	06312-10060	PLUG	1						
10	06312-10010	PLUG	2						P/T1/8
11	04811-00200	O RING v	1						DIA19.8
12	01025-50650	BOLT	3						M6*1.0
13	T2262-38131	TUBE, INLET	1						
14	04811-00200	O RING v	1						DIA19.8
15	01125-50850	BOLT, WASHER	2						M8XP1.25
16	84612-3777-0	HOSE,RUBBER dnr v	1						
17	KX97248-A	CLAMP	2						스텐38#
17	31355-3819-1	HOSE BAND	2 423000001 ~					<------	스탠40#

----> Old replace New
<---> Interchangeable
* Please place an order assy(*)
<---- New replace Old
<-O-> Interchangeable with another part(s)
<-X-> Not interchangeable

https://tractormanualz.com/

T260F-T280A

HYDRAULIC TUBE GROUP

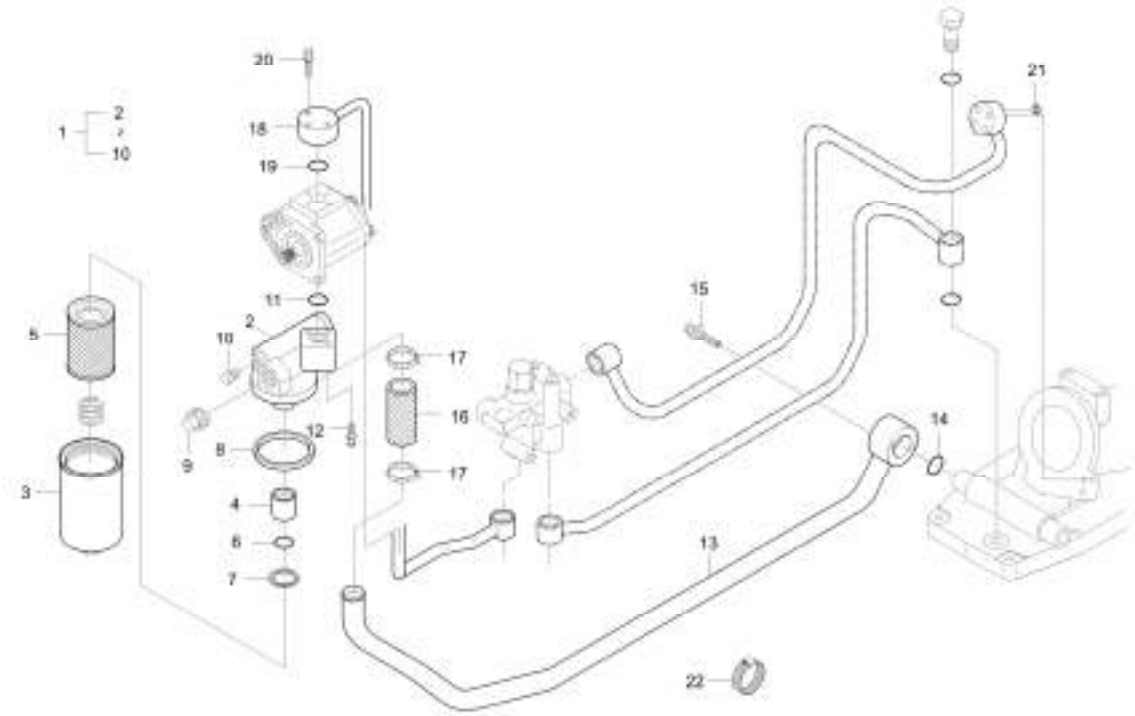

A : LK2554

No.	Part Number	Description	Qty A	Qty B	Qty C	Qty D	Qty E	I.C	Remark
18	T2262-38211	TUBE 1- DELIVERY v	1						
19	04810-00200	O RING dnr v	1						DIA19.8
20	01025-50638	BOLT	3						M6*1.0
21	04810-00100	O RING	1						
22	T4340-38231	BAND, HOSE	3						스 탠45#

----> Old replace New
<---> Interchangeable
* Please place an order assy(*)
<---- New replace Old
<-O-> Interchangeable with another part(s)
<-X-> Not interchangeable

https://tractormanualz.com/

LK2554-T295A

HYDRAULIC CYLINDER GROUP

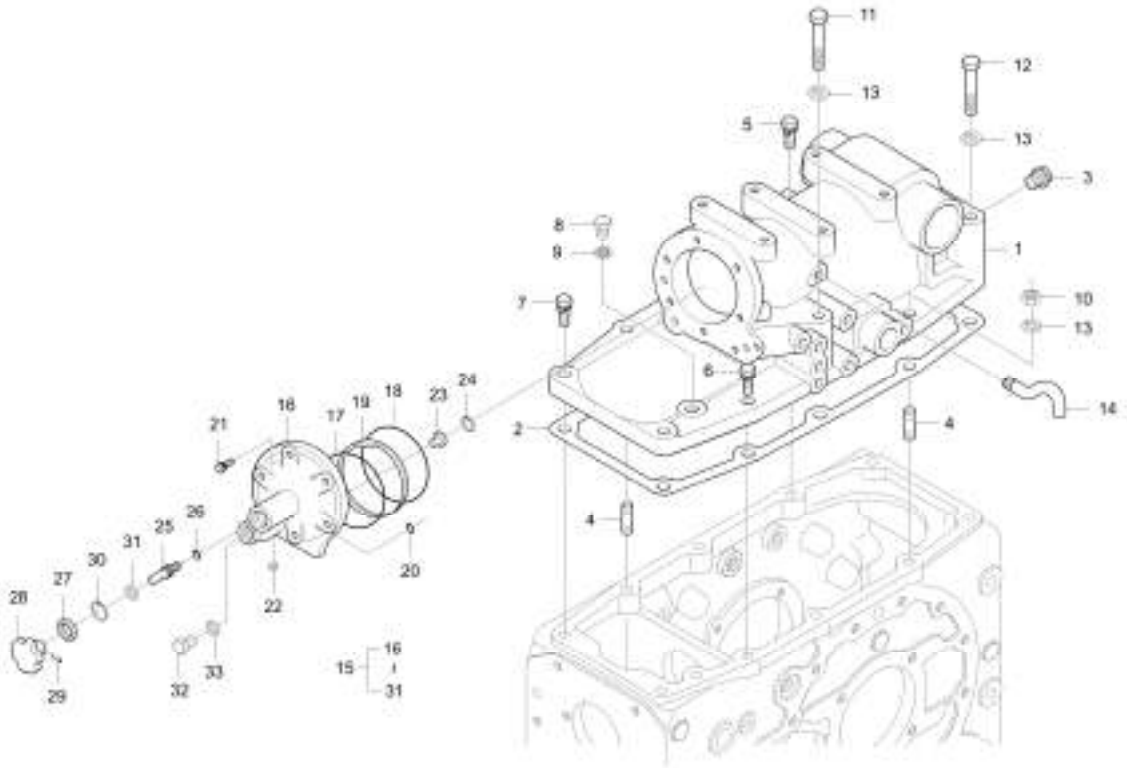

A : LK2554

No.	Part Number	Description	Qty A	Qty B	Qty C	Qty D	Qty E	I.C	Remark
1	T2280-37111	ASSY CYLINDER	1						21.5KG
2	37150-3712-2	PACKING	1						T0.5
3	32210-2758-1	PLUG	2						M12
4	01574-51235	STUD	2						M12*1.25*30
5	01133-51235	WASHER BOLT	2						M12XP1.25
6	01133-51230	BOLT, WASHER	1						M12XP1.25
7	01133-51240	BOLT, WASHER	2						M12XP1.25
8	06311-35030	PLUG	1						HEX23*30
9	04717-01700	WASHER, SEAL	1						
10	02176-50120	NUT	2						M12XP1.25
11	01173-51295	BOLT	1						M12*1.25*95
12	01173-51200	BOLT	2						M12*1.25*100
13	04512-50120	SPRING_WASHER v	5						M12
14	34260-3727-1	BREATHER	1						OD10*T2-2.3
15	T2280-A0041	ASSY COVER O/P CYLDER	1						
16	T2240-37213	COVER, O/P CYLINDER FRONT	1						3.2KG
17	04811-50900	O RING	1						G90
18	04811-50700	O RING	1						

----> Old replace New <---- New replace Old <-X-> Not interchangeable
<---> Interchangeable <-O-> Interchangeable with another part(s)
* Please place an order assy(*)

https://tractormanualz.com/

LK2554-T295A

HYDRAULIC CYLINDER GROUP

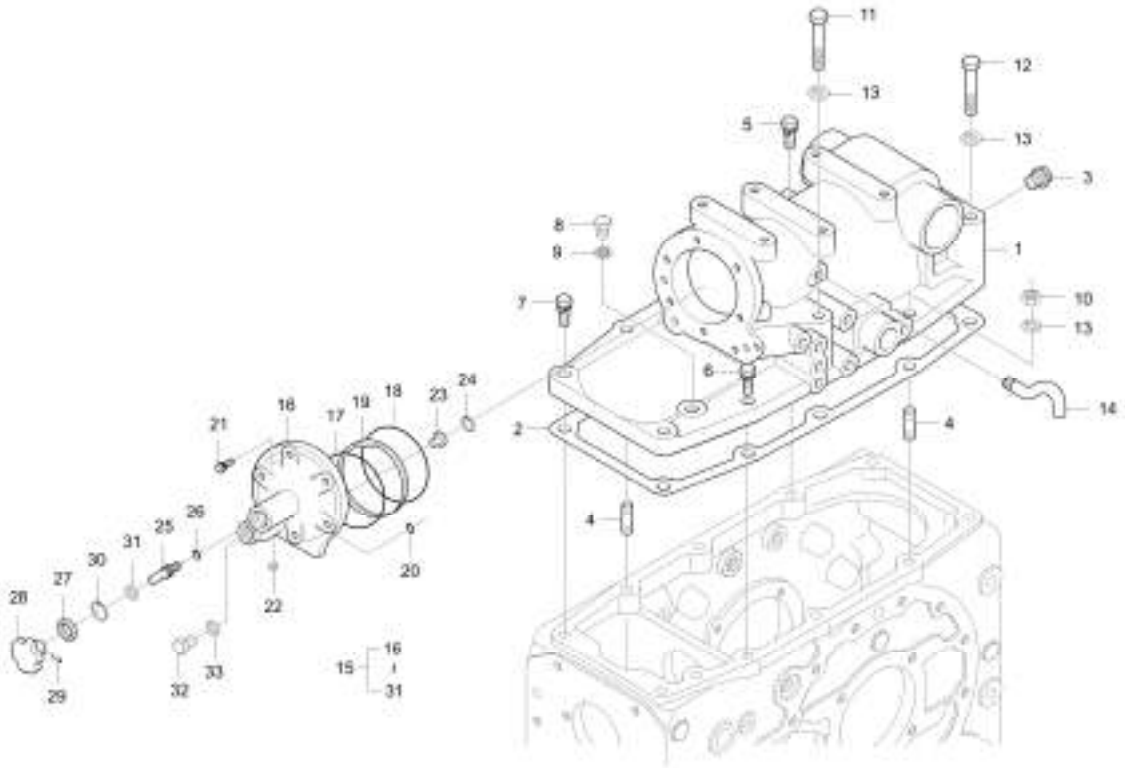

A : LK2554

No.	Part Number	Description	Qty A	Qty B	Qty C	Qty D	Qty E	I.C	Remark
19	T2240-37292	RING,BACK-UP	1						엔드리스형
20	04810-00140	O RING	1						P14
21	01133-51038	BOLT	6						M10XP1.25
22	06350-00810	PLUG v	1						
23	34150-3725-2	COLLAR, ADJUSTING	1						OD20*25
24	04611-00180	RING,SNAP	1						
25	T2240-37223	SCREW,ADJUSTING	1						OD15
26	04810-00100	O RING	1						
27	09230-08164	SEAL,OIL	1						
28	34150-3723-2	GRIP	1						80G
29	05411-00418	PIN, SPRING	1						DIA4*18
30	34150-3726-1	SNAP RING	1						T1.2
31	04012-50080	WASHER, PLAIN	1						M8
32	06331-35012	PLUG v	1						M12*P1.25
33	04724-00120	PACKING	1						내경DIA12.1

----> Old replace New <---- New replace Old <-X-> Not interchangeable
<---> Interchangeable <-O-> Interchangeable with another part(s)
* Please place an order assy(*)

https://tractormanualz.com/

T260F-T300A

CONTROL VALVE GROUP

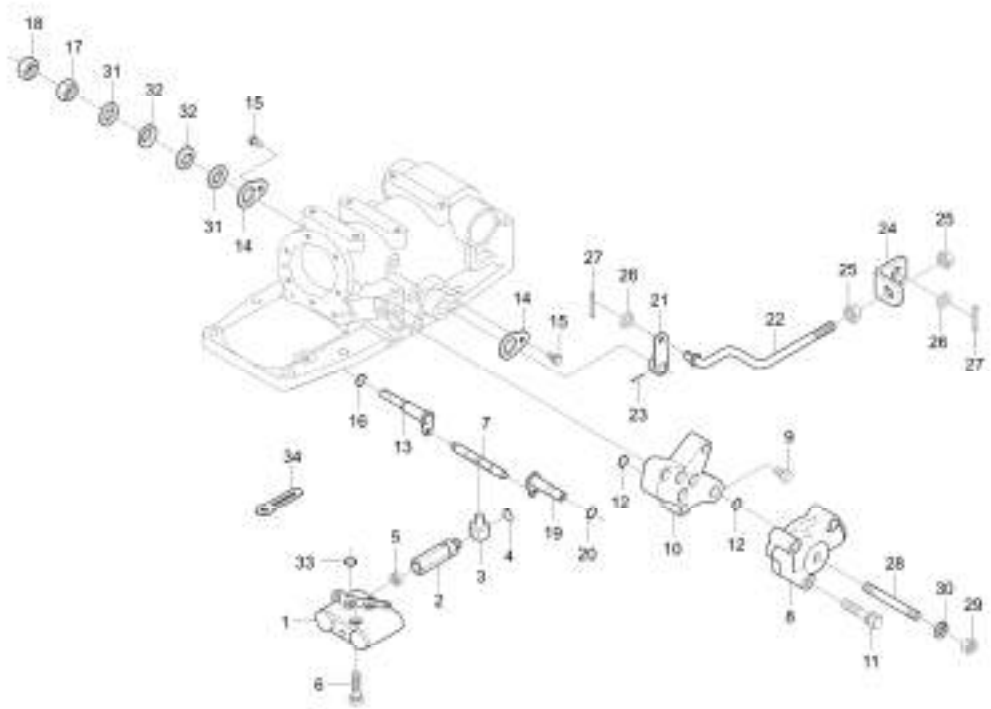

A : LK2554

No.	Part Number	Description	Qty A	Qty B	Qty C	Qty D	Qty E	I.C	Remark
1	37150-3640-5	VALVE,CONTROL	1						
2	37150-3641-1	SPOOL 1, JOINT	1						HEX12*45
3	37150-3642-1	SPOOL 2, JOINT	1						HQE13
4	04613-00060	RING,SNAP	1						
5	02112-50080	NUT	1						M8*P1.25
6	01123-50850	Hex Head Cap Screw with Spring Washer 8mmx55mm v	3						M8XP1.25
7	37150-3643-1	LEVER, OPERATION	1						OD12
8	37150-3660-4	VALVE, RELIEF	1						
8	T2440-37281	COVER,CYLINDER LH	1					<------	0.44KG
9	06350-00810	PLUG v	1						
10	37150-3661-4	SPACER, VALVE	1						
11	01123-50865	BOLT, WASHER	2						M8XP1.25
12	04810-00140	O RING	6						P14
13	37150-3765-3	ARM, ADJUSTMENT	1						
13	T2240-37652	ARM, CONTROL	1					<----->	
14	34260-3689-1	STOPPER	1						T2.0
15	01123-50816	Hex Head Cap Screw	1						M8XP1.25
16	04811-00110	O RING	1						

----> Old replace New <---- New replace Old <-X-> Not interchangeable
<---> Interchangeable <-O-> Interchangeable with another part(s)
* Please place an order assy(*)

https://tractormanualz.com/

T260F-T300A

CONTROL VALVE GROUP

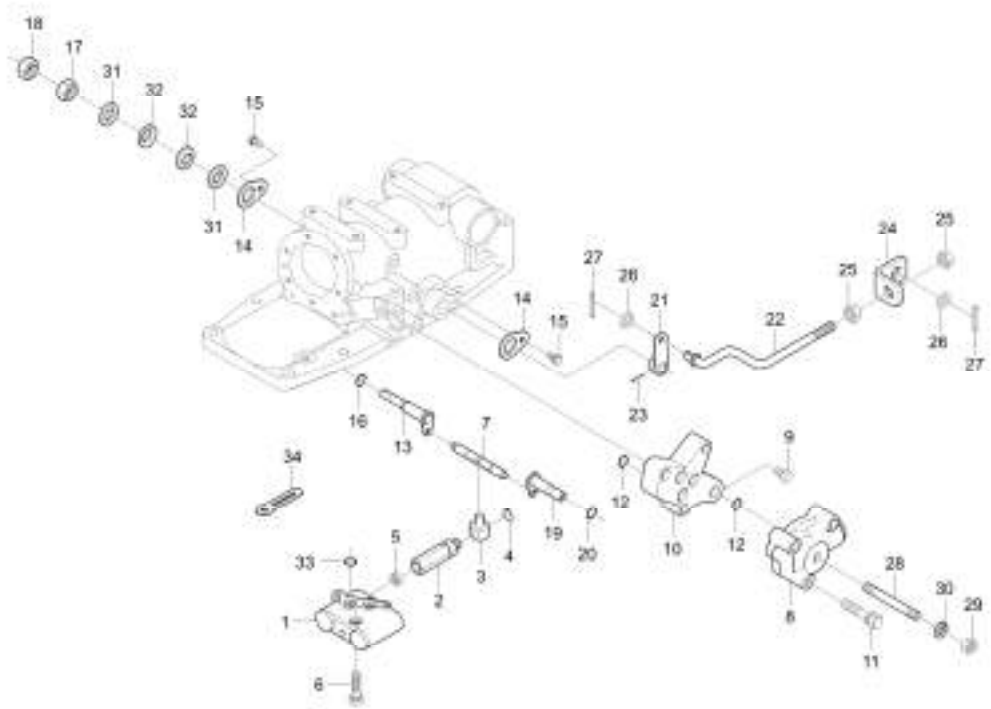

A : LK2554

No.	Part Number	Description	Qty A	Qty B	Qty C	Qty D	Qty E	I.C	Remark
17	02176-50140	NUT	1						M14XP1.5
18	02172-50140	OB NUT	1						M14*P1.5
19	37150-3767-3	LEVER SHAFT	1						
20	04811-00110	O RING	1						
21	37150-3768-5	LEVER	1						
22	37220-3769-3	ROD, 1	1						
23	05411-00420	PIN, SPRING	1						DIA4.4XL20
24	37220-3764-2	PLATE, ADJUSTMENT	1						T4.5
25	02114-50080	NUT v	2						M8*P1.25
26	04013-50080	WASHER	2						
27	05511-50218	PIN, SPLIT	2						DIA1.8XL18
28	37220-3663-1	STUD	1						
29	02114-50080	NUT v	1						M8*P1.25
30	04512-50080	SPRING WASHER	1						M08
31	38430-3689-1	WASHER	2						T 1.5
32	34260-3688-1	SPRING, PLATE	2						T1.5
33	04810-00120	O RING	2						DIA11.8
34	37150-3447-1	CLAMP	2						T0.5

----> Old replace New <---- New replace Old <-X-> Not interchangeable
<---> Interchangeable <-O-> Interchangeable with another part(s)
* Please place an order assy(*)

https://tractormanualz.com/

L2601-T320A

HYDRAULIC PUMP GROUP

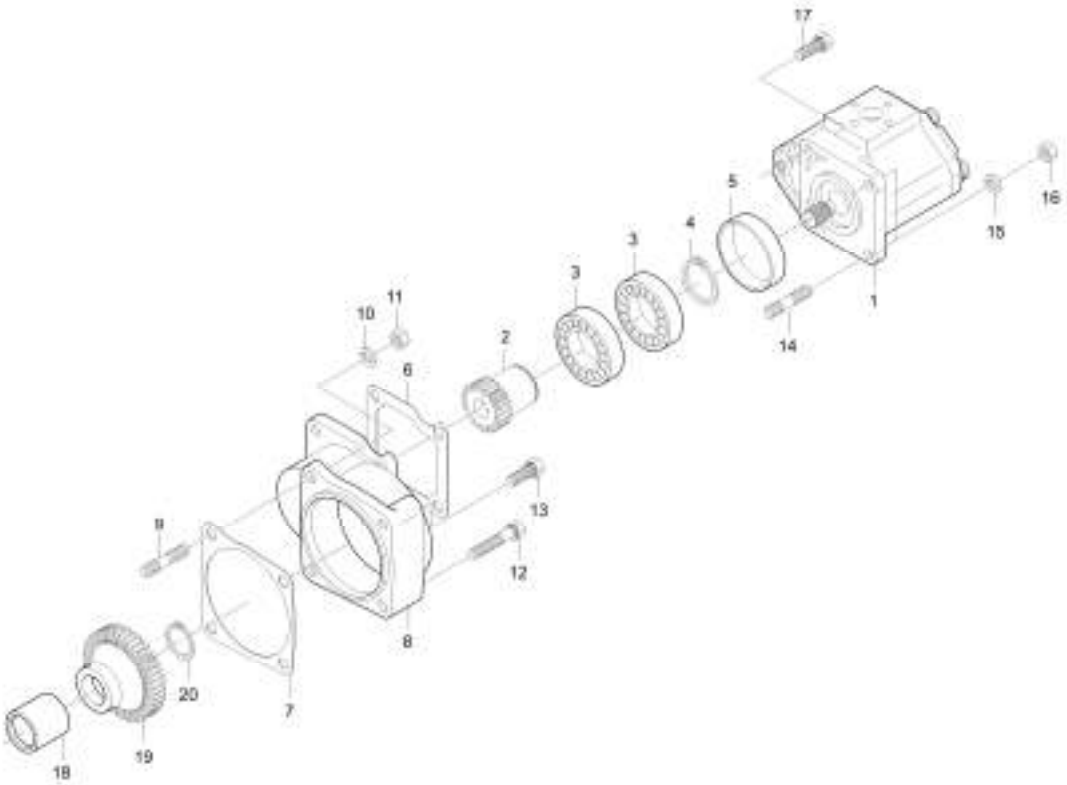

A : LK2554

No.	Part Number	Description	Qty A	Qty B	Qty C	Qty D	Qty E	I.C	Remark
1	T2540-76102	GEAR PUMP, ASSY v obs	1						
2	T2440-36352	GEAR,SPUR 22	1						
3	T2540-36371	BEARING,BALL	2						#6006HL1
4	04612-00300	SNAP RING	1						DIA30
5	T2440-36361	COLLAR	1						OD59.6,T6.2
6	34150-3787-2	PACKING	1						T0.5*8.5*8.5
7	34150-3786-3	PACKING	1						T0.5*105*100
8	84612-3784-0	USE 84612-37840	1						
9	01513-50822	STUD	1						M8XP1.25
10	04512-50080	SPRING WASHER	1						M08
11	02114-50080	NUT v	1						M8*P1.25
12	01123-50845	BOLT, WASHER	2						M8*P1.25
13	01123-50822	BOLT, WASHER	1						M8XP1.25
14	01513-50822	STUD	2						M8XP1.25
15	04512-50080	SPRING WASHER	2						M08
16	02114-50080	NUT v	2						M8*P1.25
17	01123-50822	BOLT, WASHER	2						M8XP1.25
18	34150-3782-1	SPACER	1						OD32*T3.2*26

----> Old replace New <---- New replace Old <-X-> Not interchangeable
<---> Interchangeable <-O-> Interchangeable with another part(s)
* Please place an order assy(*)

https://tractormanualz.com/

L2601-T320A

HYDRAULIC PUMP GROUP

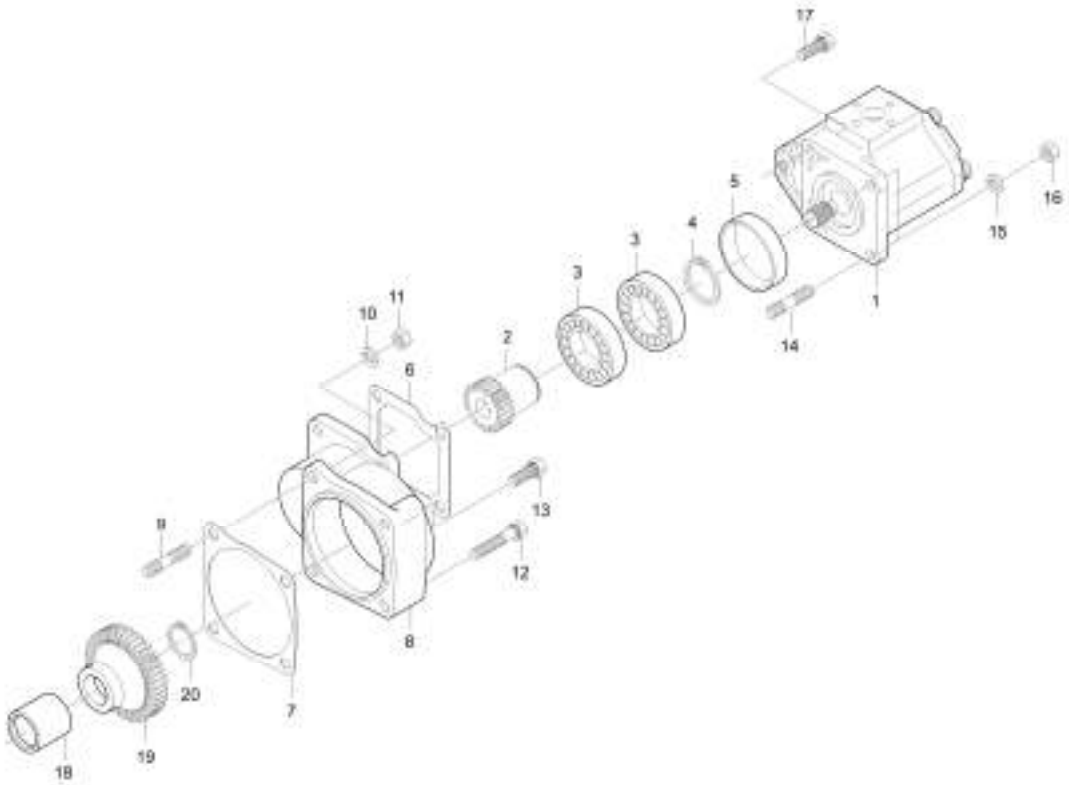

A : LK2554

No.	Part Number	Description	Qty A	Qty B	Qty C	Qty D	Qty E	I.C	Remark
19	84612-3781-1	GEAR, 45	1						
20	04612-00250	CIR-CLIP	1						DIA25

----> Old replace New
<---> Interchangeable
* Please place an order assy(*)
<---- New replace Old
<-O-> Interchangeable with another part(s)
<-X-> Not interchangeable

https://tractormanualz.com/

T260F-T325A

HYDRAULIC RELIEF GROUP

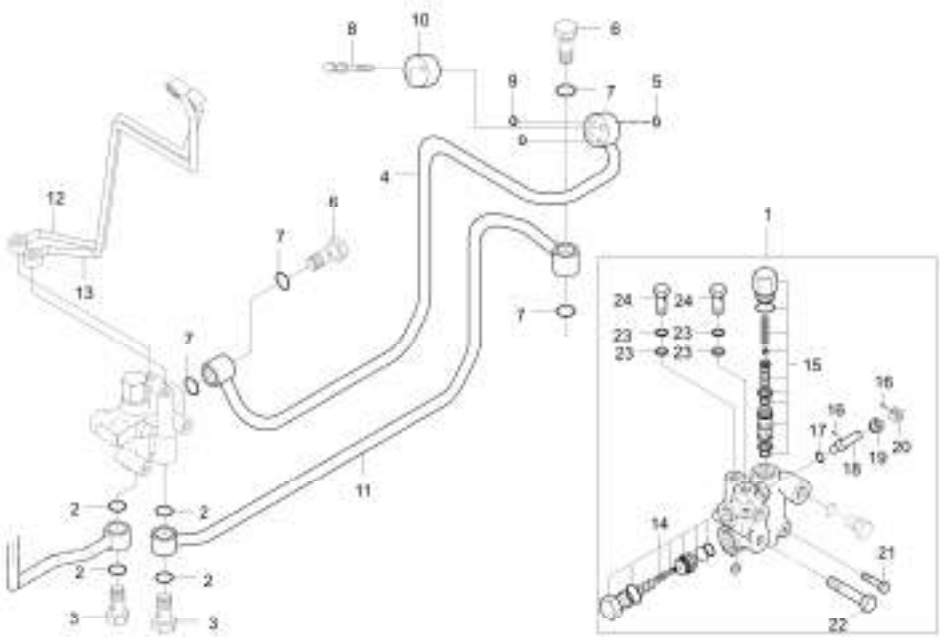

A : LK2554

No.	Part Number	Description	Qty A	Qty B	Qty C	Qty D	Qty E	I.C	Remark
1	T2540-38302	ASS'Y RELIEF,HYD. v	1						
1	T2540-38303	ASSY RELIEF,HYD v	1 423000001 ~					<------	
1	T2540-38304	ASS'Y, RELIEF HYD.	1 D23000001 ~					<------	
2	04811-00200	O RING v	2						DIA19.8
3	84612-3626-0	TUBE, JOINT	1						HEX27
4	T2262-38221	TUBE 2- DELIVERY v	1						
5	04810-00100	O RING	1						
6	76591-3625-1	TUBE, JOINT	1						HEX27
7	04810-00200	O RING dnr v	2						DIA19.8
8	01123-50850	Hex Head Cap Screw with Spring Washer 8mmx55mm v	2						M8XP1.25
9	04810-00120	O RING	2						DIA11.8
10	31355-3831-1	CAP	1						
11	T2262-38231	TUBE, RETURN	1						
11	T2262-38232	TUBE- RETURN v	1 023000001 ~					<------	
12	T2262-45201	TUBE, DELIVERY	1						
12	T2262-45202	TUBE- DELIVERY obs v	1 323000001 ~					<----->	
13	T2262-45301	TUBE, RETURN	1						
13	T2262-45302	TUBE-RETURN obs v	1 323000001 ~					<----->	

----> Old replace New <---- New replace Old <-X-> Not interchangeable
<---> Interchangeable <-O-> Interchangeable with another part(s)
* Please place an order assy(*)

https://tractormanualz.com/

T260F-T325A

HYDRAULIC RELIEF GROUP

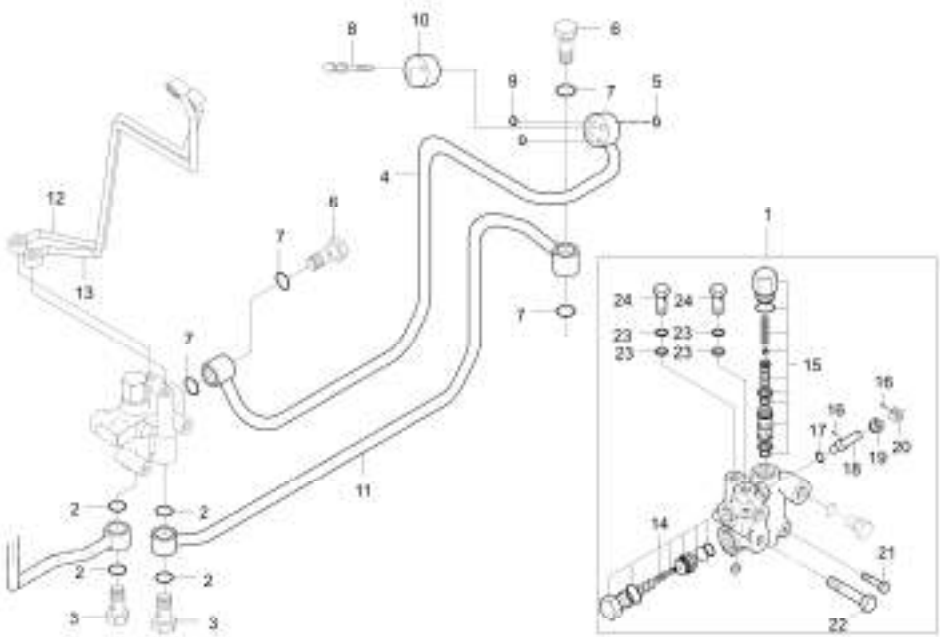

A : LK2554

No.	Part Number	Description	Qty A	Qty B	Qty C	Qty D	Qty E	I.C	Remark
14	T2445-38421	ASS'Y VALVE,RELIEF obs v	1						
15	T2445-38623	ASSY, FLOW DIVIDE	1						
15	T2540-38621	ASS'Y, FLOW DIVIDE	1					<------	
16	05411-00316	PIN,SPRING	2						
17	04811-00090	O RING	1						DIA8.8
18	T2445-38341	SHAFT, SPOOL v	1						
19	T2445-38401	BOLT	1						
20	T2445-38371	NUT obs v	1						
21	01123-50860	BOLT, WASHER	1						M8XP1.25
22	01123-50875	OB-BOLT	1						M8XP1.25
23	04714-00120	PACKING	4						
24	T2445-38891	BOLT	2						

----> Old replace New <---- New replace Old <-X-> Not interchangeable
<---> Interchangeable <-O-> Interchangeable with another part(s)
* Please place an order assy(*)

https://tractormanualz.com/

L2203-T330A

LIFT ARM GROUP

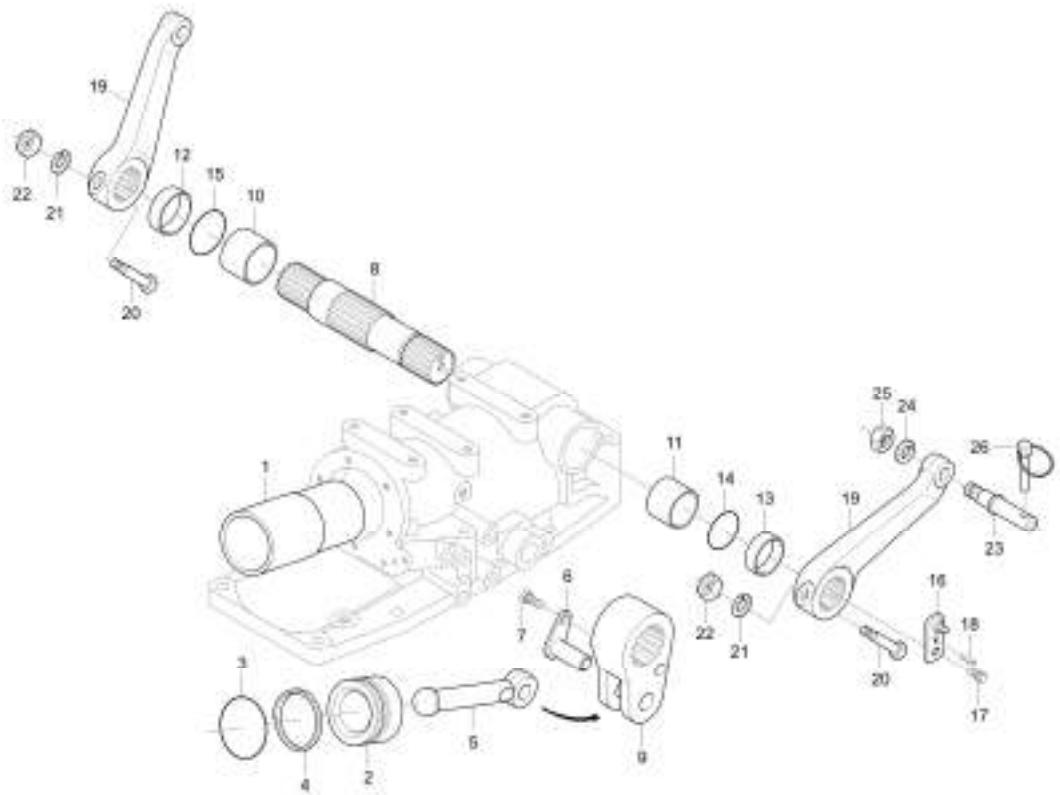

A : LK2554

No.	Part Number	Description	Qty A	Qty B	Qty C	Qty D	Qty E	I.C	Remark
1	37220-3713-2	SLEEVE, CYLINDER	1						OD90*T9.0
2	37220-3731-1	PISTON, HYDRAULIC	1						1.25KG
3	04811-00650	O RING dnr v	1						
4	34220-3738-1	BACK UP RING	1						P65스파이럴
5	37300-3732-4	ROD, HYDRAULIC	1						
6	32240-3734-2	PIN, FIXING	1						
7	01133-51018	BOLT dnr , v	1						M10XP1.25
8	37220-3743-3	SHAFT, HYDRAULIC ARM	1						DIA55*261
9	37220-3744-1	ARM, HYDRAULIC	1						
10	32240-3745-1	BUSH	1						ID45, OD50
11	32240-3746-1	BUSH	1						
12	34220-3748-2	SPACER	1						DIA52*T4*31
13	37300-3749-1	SPACER	1						
14	04811-50450	O_RING	1						
15	04811-50500	O RING	1						
16	37150-3766-1	PLATE, CONNECTING	1						
17	01123-50816	Hex Head Cap Screw	1						M8XP1.25
18	05411-00412	OB PIN,SPRING	1						

----> Old replace New <---- New replace Old <-X-> Not interchangeable
<---> Interchangeable <-O-> Interchangeable with another part(s)
* Please place an order assy(*)

https://tractormanualz.com/

L2203-T330A

LIFT ARM GROUP

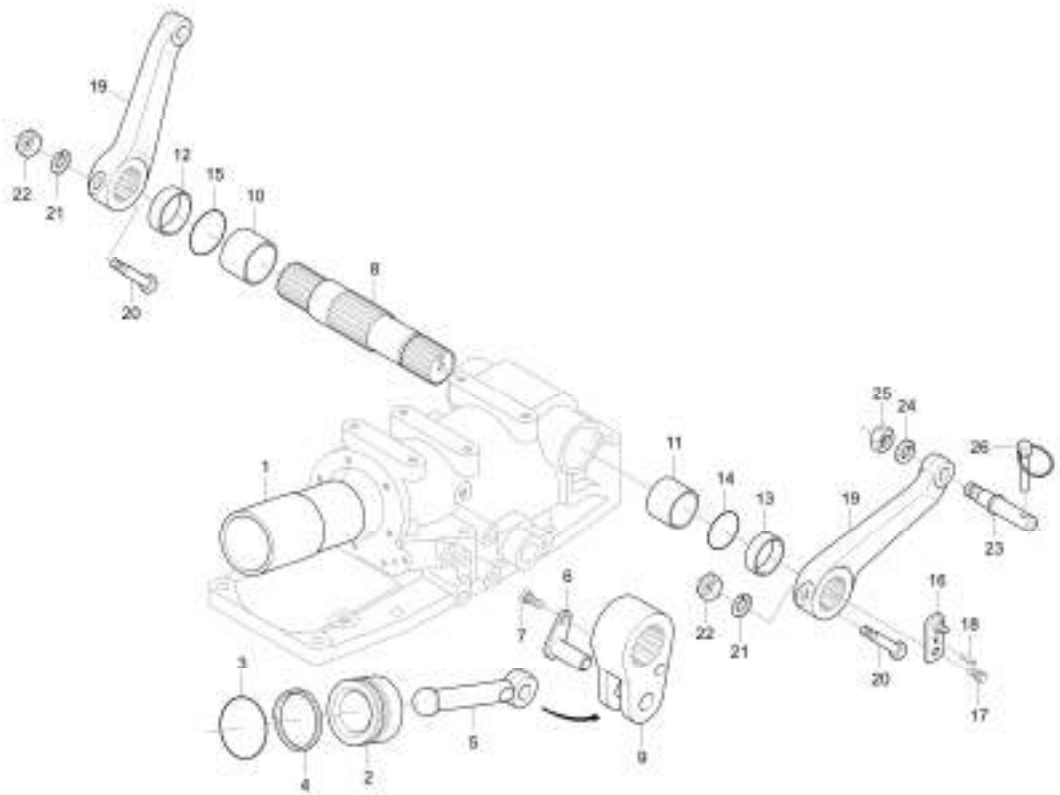

A : LK2554

No.	Part Number	Description	Qty A	Qty B	Qty C	Qty D	Qty E	I.C	Remark
19	37220-3761-4	ARM, LIFT	2						
20	01173-51275	BOLT obs v	2						M12*1.25
21	04512-50120	SPRING_WASHER v	2						M12
22	02176-50120	NUT	2						M12XP1.25
23	32240-3769-6	PIN obs v	2						OD25
24	04512-50160	SPRING_WASHER	2						M16
25	02076-50160	NUT	2						
26	34150-3764-4	PIN,CLIP	2						DIA10.0

----> Old replace New <---- New replace Old <-X-> Not interchangeable
<---> Interchangeable <-O-> Interchangeable with another part(s)
* Please place an order assy(*)

https://tractormanualz.com/

T260F-T470A

STEERING SYSTEM GROUP

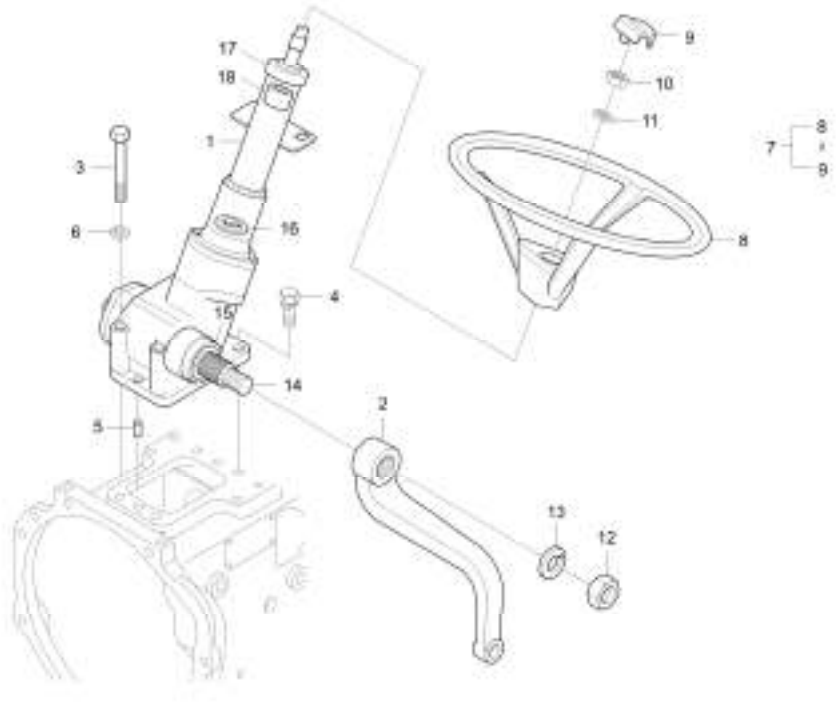

A : LK2554

No.	Part Number	Description	Qty A	Qty B	Qty C	Qty D	Qty E	I.C	Remark
1	T2540-A0030	ASSY POWER STEERING DNR v	1						
2	T2540-16341	ARM,PITMAN obs v	1						
3	01173-51090	BOLT	2						
4	01133-51028	BOLT	2						M10*1.25
5	05012-01018	PIN, STRAIGHT	2						DIA10XL18
5	37150-2737-1	PIN, PARALLEL	2					<------	DIA11*21
6	04512-50100	WASHER, SPRING v	2						M10
7	85726-1680-1	HANDLE ASSY	1						
8	84612-1681-1	HANDLE	1						
9	37150-1682-4	CAP,HANDLE	1						
10	02174-50120	NUT	1						M12*P1.25
11	04512-50120	SPRING_WASHER v	1						M12
12	02176-50220	NUT dnr v	1						M22*P1.5
13	04512-50220	WASHER, SPRING	1						M22
14	23451-00415	SHAFT, SECTOR (use 35270-16600)	1						
15	23451-03113	OIL SEAL(SECTOR) (AC1871G) dnr v	1						
16	23641-06501	OIL SEAL(SHAFT STEERING) v	1						
17	38240-1639-0	SEAL OIL dnr v	1						

----> Old replace New
<---- New replace Old
<-X-> Not interchangeable
<---> Interchangeable
<-O-> Interchangeable with another part(s)
* Please place an order assy(*)

https://tractormanualz.com/

T260F-T470A

STEERING SYSTEM GROUP

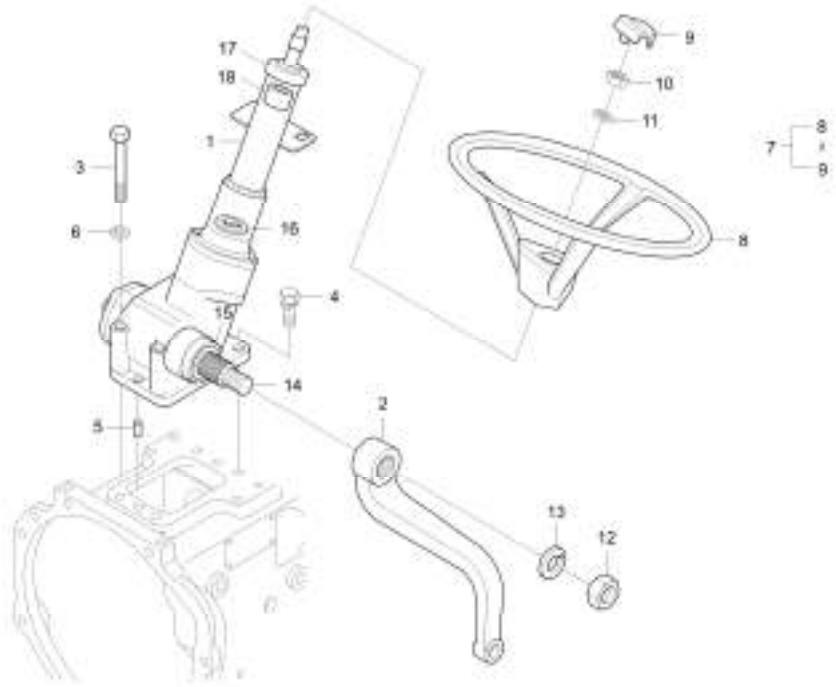

A : LK2554

No.	Part Number	Description	Qty A	Qty B	Qty C	Qty D	Qty E	I.C	Remark
18	38240-1652-0	BUSH,COLUM	1						

----> Old replace New
<---> Interchangeable
* Please place an order assy(*)
<---- New replace Old
<-O-> Interchangeable with another part(s)
<-X-> Not interchangeable

https://tractormanualz.com/

LK2554-T120A

BATTERY GROUP

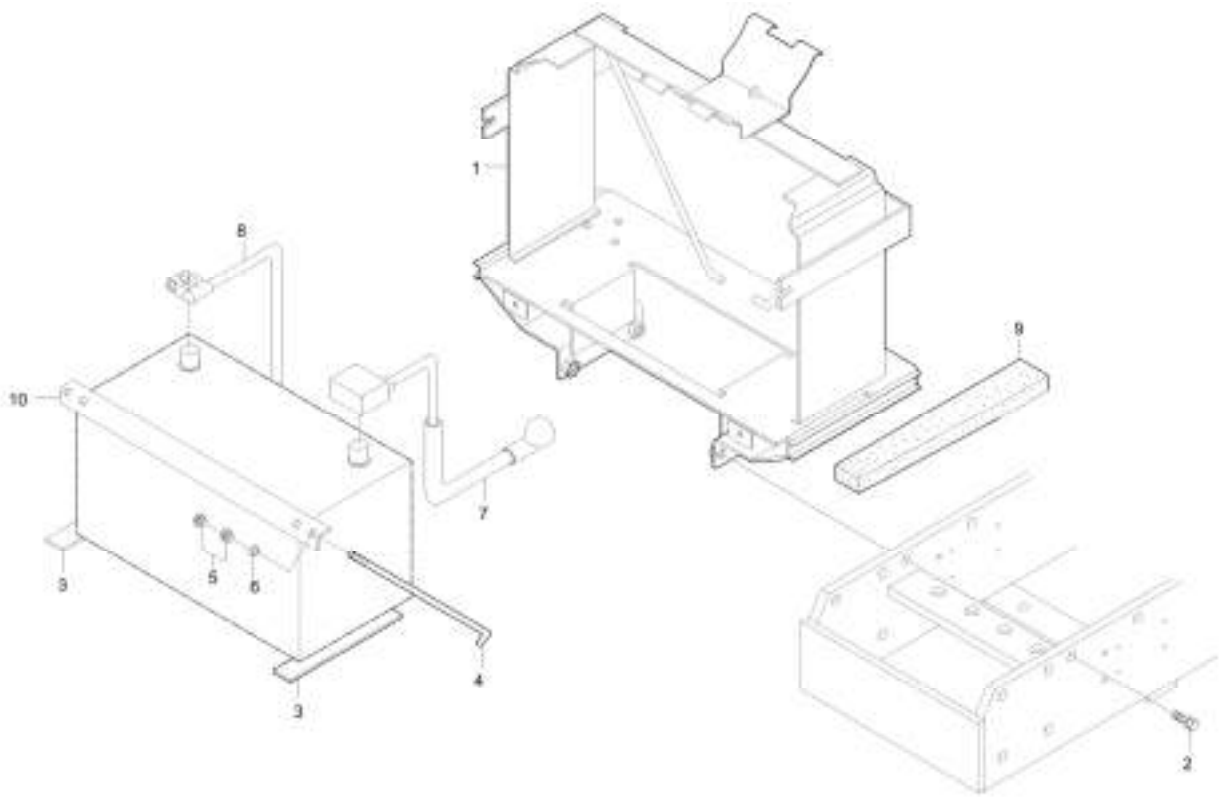

A : LK2554

No.	Part Number	Description	Qty A	Qty B	Qty C	Qty D	Qty E	I.C	Remark
1	T2280-33212	SUPPORT, BATTERY v	1						
1	T2280-33213	BATTERY SUPPORT v	1					<------	
2	01133-51030	BOLT, WASHER	4						M10XP1.25
3	T2610-50271	RUBBER, CUSHION v	2						
4	76591-5449-0	BOLT, BATTERY CLAMPING	2						DIA6*25
5	02014-50060	NUT	4						M6*P1.0
6	04015-50060	WASHER, PLAIN	2						M6
7	T2540-33332	CORD BATTERY v	1						
8	T2240-31352	CORD,BATTERY EARTH V	1						
9	84612-1337-0	USE 84612-13370	2						
10	T2540-33273	RETAINER, BATTERY obs v	1						
10	T2545-33271	RETAINER, BATTERY v	1					<------	
10	T2545-33271GY	PLATE,BATTERY LOCK v	1					<------	

----> Old replace New
<---- New replace Old
<-X-> Not interchangeable
<---> Interchangeable
<-O-> Interchangeable with another part(s)
* Please place an order assy(*)

https://tractormanualz.com/

LK2554-T130A

FENDER LIGHT GROUP

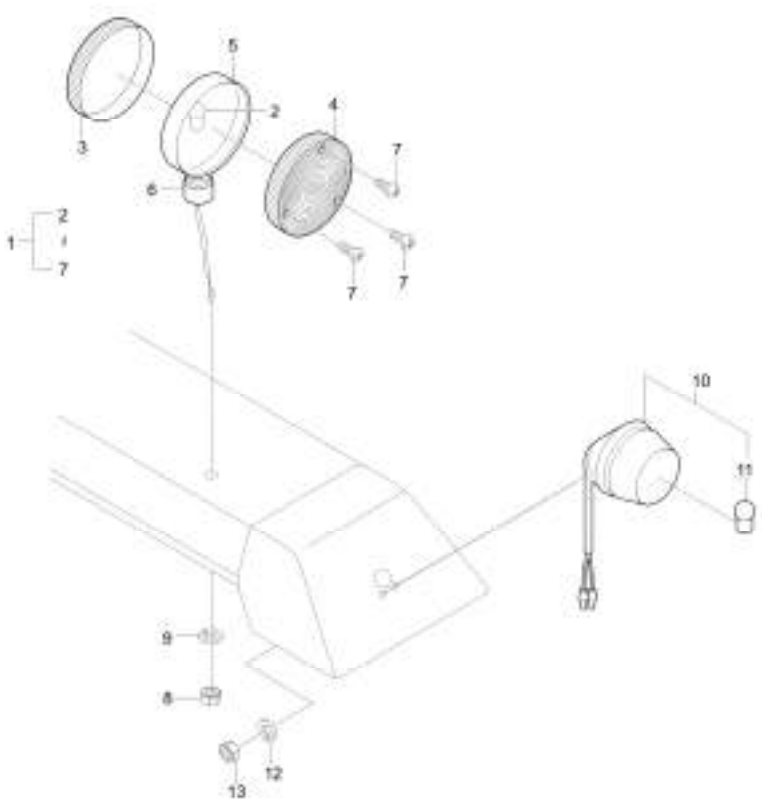

A : LK2554

No.	Part Number	Description	Qty A	Qty B	Qty C	Qty D	Qty E	I.C	Remark
1	84612-3423-1	LAMP, DIRECTION	2 123000001 ~						
1	84612-3423-2	TURN SIGNAL LAMP v	2 D23000001 ~					<----->	
2	84612-3428-1	BULB-12VX21W dnr v	2						12V/21W
2	T4620-69272	BULB, 12VX21W	2					<----->	12V21W (S25S)
3	84612-3424-0	COVER, LH	2						
4	84612-3425-0	COVER, RH	2						
5	84612-3426-0	FRAME	2						
6	84612-3427-0	PACKING, RUBBER	2						
7	84612-3430-0	SCREW	6						
8	02014-50100	NUT	2						M10XP1.5
9	04512-50100	WASHER, SPRING v	2						M10
10	84612-3401-1OE	REAR LAMP ASSY	2 023000001 ~						
10	84612-3401-2	REAR LAMP ASSY	2 D23000001 ~					<----->	
11	84612-3404-0	BULB	2						12V-23/8W
11	T4340-33682	BULB (12V 21W/5W)	2					<----->	12V21/5W (S25D)
12	04512-50060	WASHER, SPRING	4						M06
13	02014-50060	NUT	4						M6*P1.0

----> Old replace New
<---- New replace Old
<-X-> Not interchangeable
<---> Interchangeable
<-O-> Interchangeable with another part(s)
* Please place an order assy(*)

https://tractormanualz.com/

LK2554-T140A

ELECTRICITY SYSTEM 1GROUP

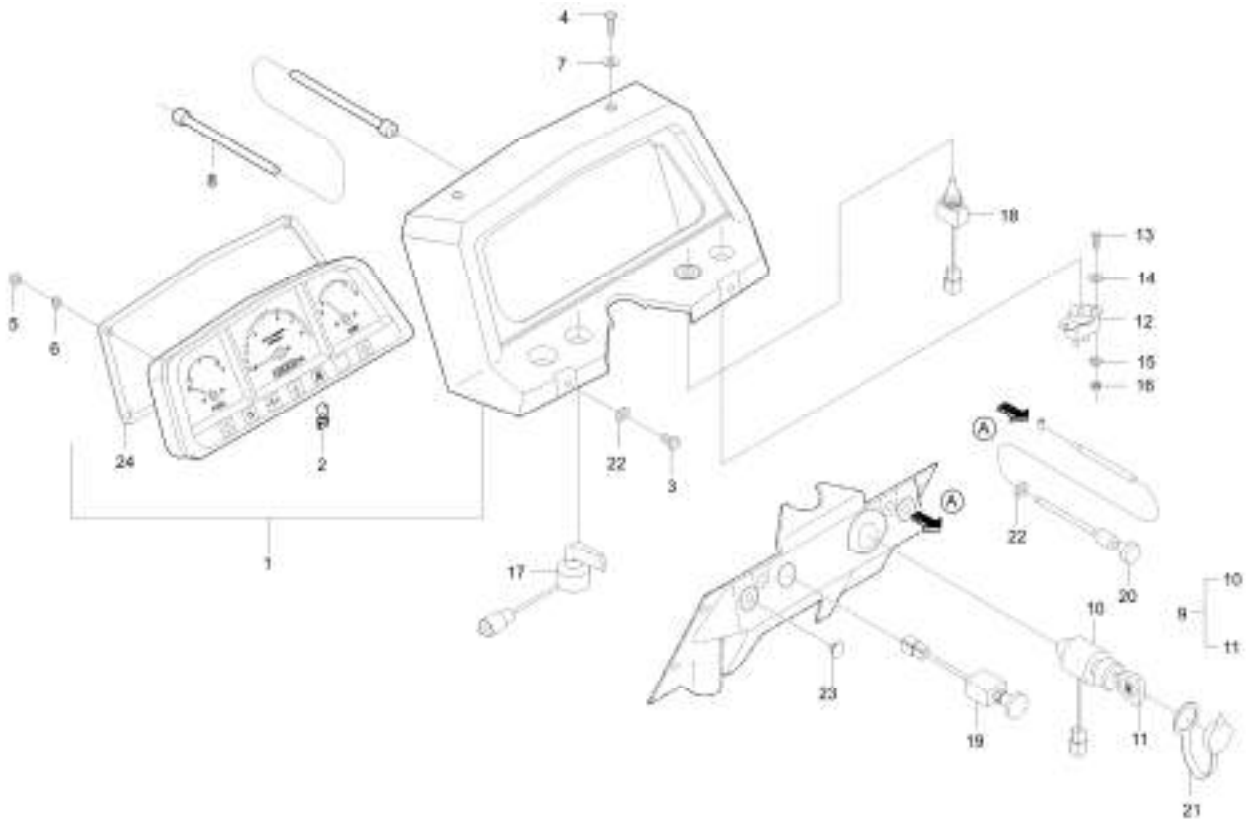

A : LK2554

No.	Part Number	Description	Qty A	Qty B	Qty C	Qty D	Qty E	I.C	Remark
1	T2540-31202	ASS'Y INSTRUMENT v	1						
1	T2540-31203	ASS'Y INSTRUMENT v	1					<----->	
2	T2540-31391	BULB 12V,1.7W obs v	9						
3	T2540-41251	SCREW	2						M8*1.25
4	03017-50625	SCREW	2						M6*1.0*25
5	02054-50050	NUT	5						M5*P1.0
6	04012-50050	WASHER, PLAIN	6						M5
7	53143-7311-2	WASHER, SPUR 16	2						T1.0*18*18
8	35240-3465-1	CABLE,TRACTOR METER	1						
9	T2540-41131	ASSY SWITCH,STARTER v	1						
9	T2540-41133	STARTER SWITCH W/OUT KEY v	1 123000001 ~					<----->	
10	T2540-41141	SWITCH, STARTING	1						
10	T2540-41142	ASS'Y SWITCH,STARTER v	1					<----->	
11	T2540-41151	KEY,STARTER v	2						
11	T2545-41151	KEY v	2 123000001 ~					<----->	
12	15321-6595-5	INDICATIOR, PREHEATER PLUG	1						
13	03054-50514	SCREW	2						
14	04013-50050	WASHER, PLAIN	1						

----> Old replace New
<---- New replace Old
<-X-> Not interchangeable
<---> Interchangeable
<-O-> Interchangeable with another part(s)
* Please place an order assy(*)

https://tractormanualz.com/

LK2554-T140A

ELECTRICITY SYSTEM 1GROUP

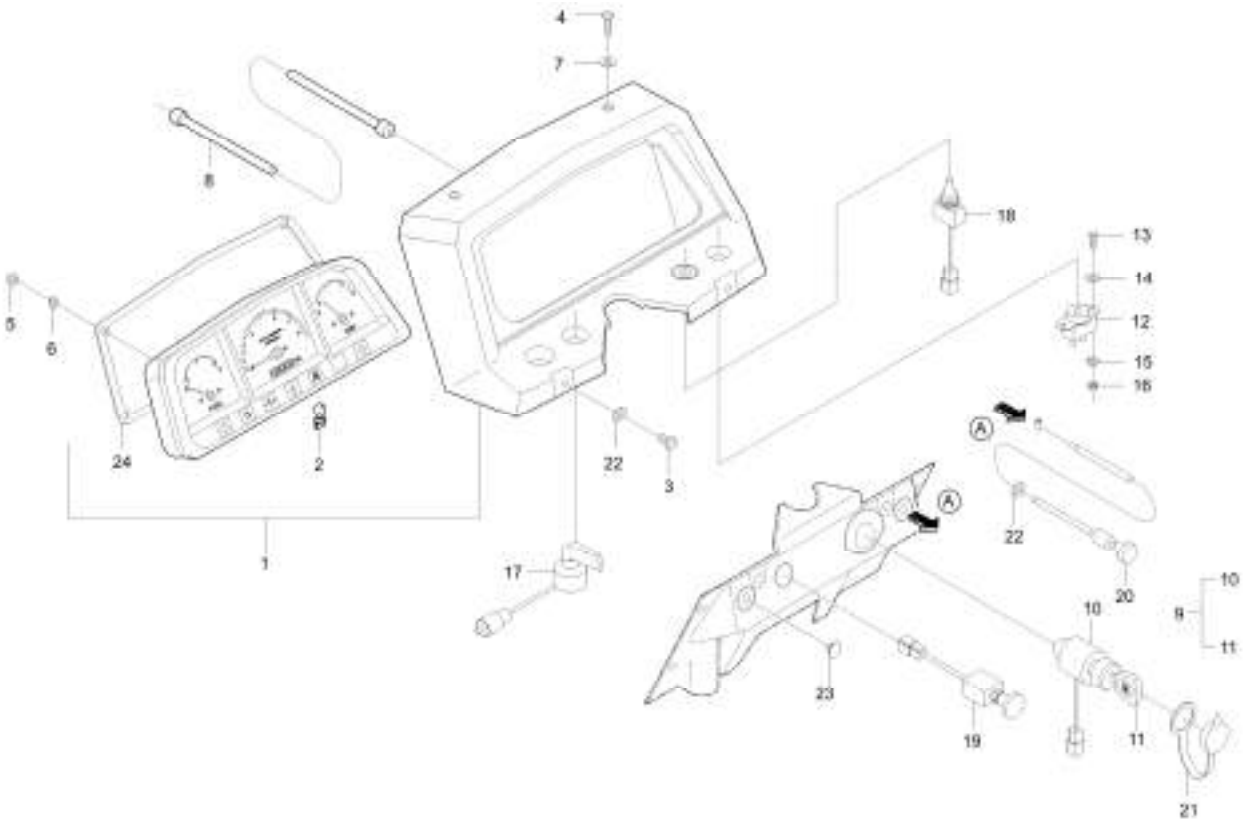

A : LK2554

No.	Part Number	Description	Qty A	Qty B	Qty C	Qty D	Qty E	I.C	Remark
15	04512-50050	WASHER, SPRING	2						M5
16	02054-50050	NUT	2						M5*P1.0
17	T2540-31892	SWITCH,HEAD LIGHTv	1						
18	84612-3261-0	DIRECTION LAMP SWITCH ASSY	1						
19	84612-3262-0	HAZARD SWITCH ASSY	1						
19	84612-3262-1	HAZARD SWITCH assy	1 723000001 ~					<----->	
19	84612-3262-2	DO NOT USE, USE 84612-32622	1 D23000001 ~					<----->	
20	T2305-34801	WIRE,ENGINE STOP dnr v	1						
21	T2540-77771	CAP, STARTER SWITCH dnr v	1						
22	04013-50080	WASHER	4						
23	84612-2929-1	PLUG	1						
24	T2540-31261	PACKING, RUBBER	1						

----> Old replace New
<---> Interchangeable
* Please place an order assy(*)
<---- New replace Old
<-O-> Interchangeable with another part(s)
<-X-> Not interchangeable

https://tractormanualz.com/

LK2554-T150A

ELECTRICITY SYSTEM 2 GROUP

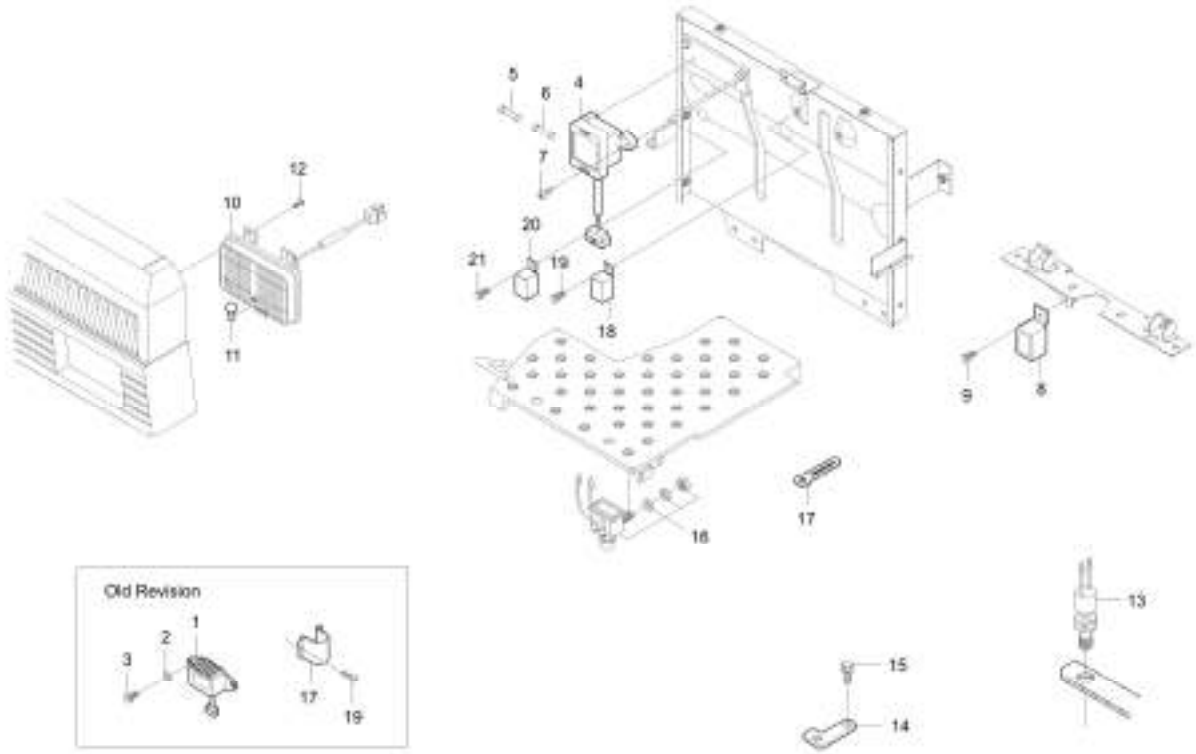

A : LK2554

No.	Part Number	Description	Qty A	Qty B	Qty C	Qty D	Qty E	I.C	Remark
1	33255-7401-2	REGULATOR	1						
1	T4260-74011	REGULATOR	1 923000001 ~					<----->	
2	01023-50616	BOLT, WASHER	2						M6XP1.0
3	04013-50060	WASHER, PLAIN	2						M6
4	T2545-33602	ASS'Y CASE,FUSE	1 723000001 ~						
4	T2545-33603	ASS'Y FUSE CASE v	1 223000001 ~					<------	
4	T2545-33604	ASS'Y FUSE CASE v	1 D23000001 ~					<------	
5	T4260-33631	FUSE, 10A	6						
6	36919-5665-0	FUSE, 20A	2						
7	03024-50520	SCREW, WASHER	2						DIA10*28
8	84612-3370-0	UNIT, FLASHER	1						
8	T4240-31052	FLASH UNIT	1					<----->	
9	01023-50616	BOLT, WASHER	1						M6XP1.0
10	T2540-33802	ASS'Y HEADLIGHT dnr v	2 423000001 ~						
10	T2540-33803	ASS'Y HEADLIGHT	2 123000001 ~					<----->	
11	T2305-33861	USE T2305-33862 BULB v	1						12V35/35W
11	T2305-33862	BULB(12V35W)	2					<----->	12V35W/35 W
12	84612-1823-0	SCREW obs v	6						M6X16

----> Old replace New
<---> Interchangeable
* Please place an order assy(*)
<---- New replace Old
<-O-> Interchangeable with another part(s)
<-X-> Not interchangeable

https://tractormanualz.com/

LK2554-T150A

ELECTRICITY SYSTEM 2 GROUP

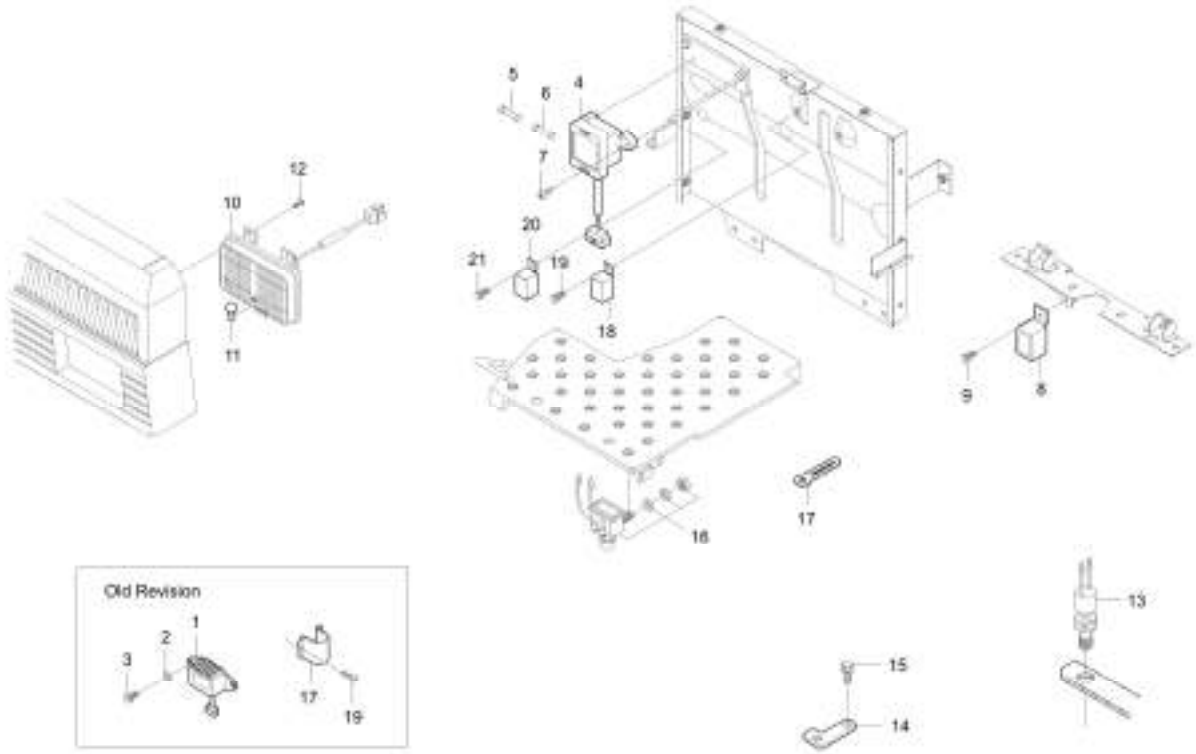

A : LK2554

No.	Part Number	Description	Qty A	Qty B	Qty C	Qty D	Qty E	I.C	Remark
13	C7810-43211	ASS'Y, SAFETY STARTER SWITCH dnr v	1						
14	37150-3456-4	LEVER, SWITCH	1						T4.5*28*80
15	01120-50820	BOLT	1						
16	36225-7549-2	SWITCH, STOP dnr v	1						
17	34150-2939-1	CLAMP, CORD v	1						-
18	C5510-43101	GLOW RELAY v	1						
19	01754-50616	BOLT, FLANGE	1						M6XP1.0
20	C5510-43101	GLOW RELAY v	1						
21	01754-50616	BOLT, FLANGE	1						M6XP1.0

----> Old replace New
<---> Interchangeable
* Please place an order assy(*)
<---- New replace Old
<-O-> Interchangeable with another part(s)
<-X-> Not interchangeable

https://tractormanualz.com/

LK2554-T160A

WIRING GROUP

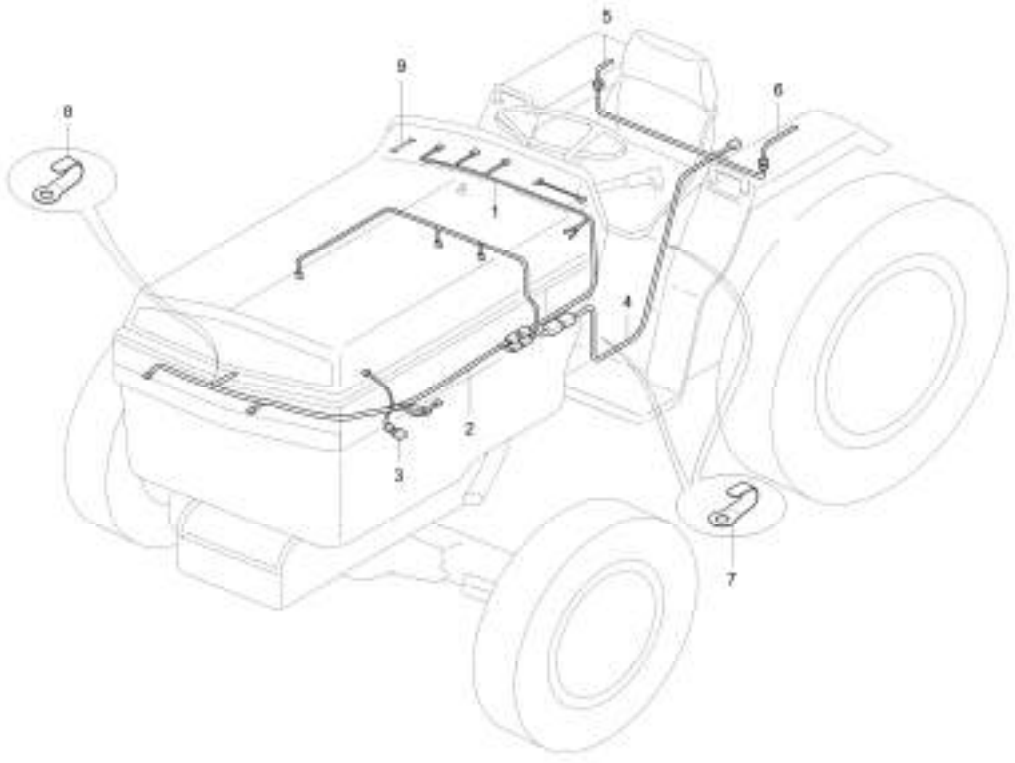

A : LK2554

No.	Part Number	Description	Qty A	Qty B	Qty C	Qty D	Qty E	I.C	Remark
1	T2280-34422	ASSY,WIRE HARNESS PANEL v	1 ~ 723000999						
1	T2280-34423	ASSY,WIRE HARNESS PANEL	1 823000001 ~ 923000999					<--X-->	
1	T2280-34424	ASS'Y WIRE HARNESS PANEL	1 023000001 ~ 123000050					<--X-->	
1	T2280-34425	OB ASS'Y WIRE PANEL	1 123000051 ~ 123000200					<--X-->	
1	T2280-34426	ASSY,PANEL WIRE HARNESS	1 323000001 ~					<--X-->	
2	T2540-34433	WIRE HARNESS ASSY, BONNET obs v	1 523000001 ~						
2	T2540-34435	BONNET HARNESS ASS'Y	1 123000001 ~ 323000050					<----->	
2	T2540-34436	ASS'Y WIRE HARNESS BONNET	1 323000051 ~					<------	
2	T2560-34432	ASS'Y WIRE HARNESS BONNET	1 D23000001 ~					<----->	
3	84612-3447-1	BLINK, FUSE	1						
3	T2540-32472	FUSE	1					<--X-->	30A
4	84612-3444-2	ASSY WIRE HARNESS,FENDER	1						
4	T2240-32442	ASSY, FENDER WIRE HARENSS	1 ~ 723000999					<--X-->	
4	T2240-32443	ASSY,WIRE HARNESS FENDER	1 823000001 ~					<--X-->	
5	T2280-32451	ASSY WIRE (LH)	1						
6	84612-3446-2	WIRE HARNESS ASSY, 6	1						
7	37150-3447-1	CLAMP	2						T0.5
8	32240-3446-1	CLAMP, NOZZLE dnr v	2						

----> Old replace New
<---> Interchangeable
<---- New replace Old
<-O-> Interchangeable with another part(s)
<-X-> Not interchangeable
* Please place an order assy(*)

https://tractormanualz.com/

LK2554-T160A

WIRING GROUP

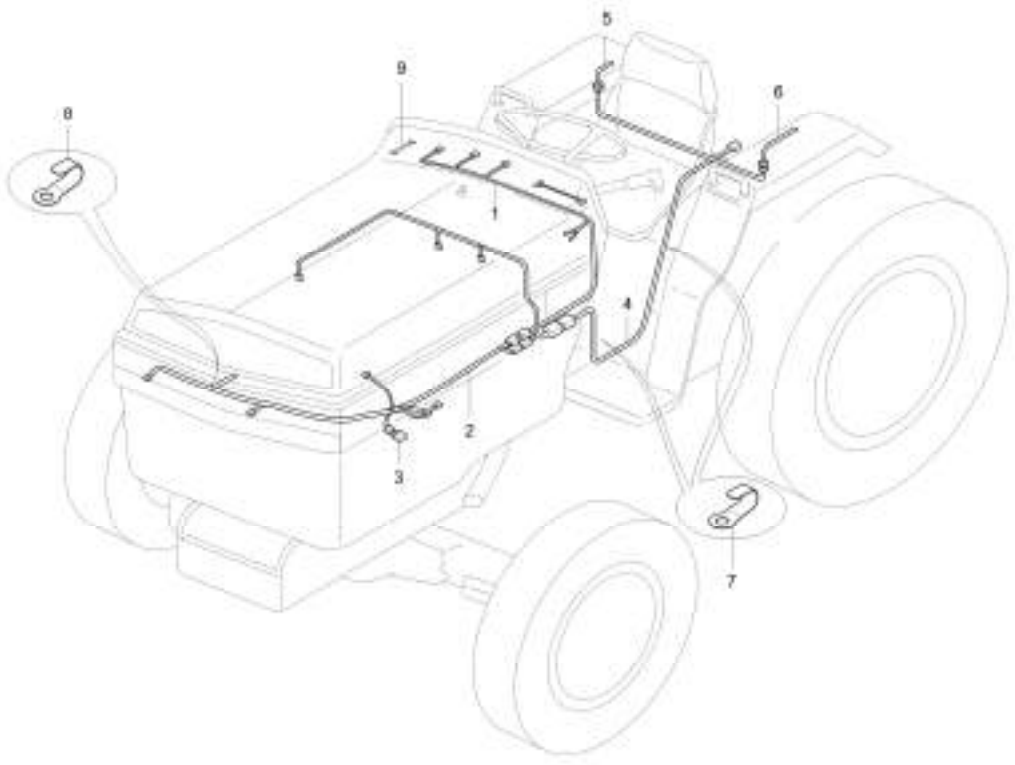

A : LK2554

No.	Part Number	Description	Qty A	Qty B	Qty C	Qty D	Qty E	I.C	Remark
9	T2540-33521	WIRE, GLOW PLUG	2 ~ 123000200						
9	T2540-33522	CORD, GLOW PLUG	2 323000001 ~					<--X-->	

----> Old replace New
<---> Interchangeable
* Please place an order assy(*)
<---- New replace Old
<-O-> Interchangeable with another part(s)
<-X-> Not interchangeable

https://tractormanualz.com/

T260F-T020A

BRAKE PEDAL GROUP

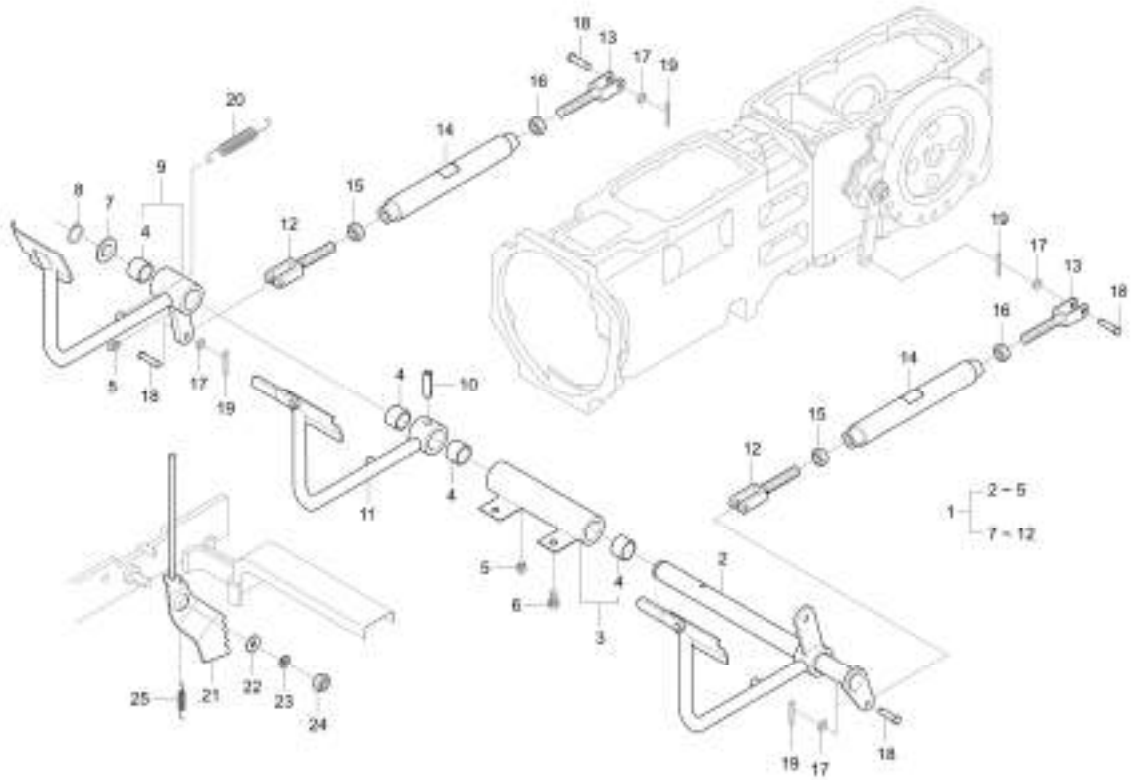

A : LK2554

No.	Part Number	Description	Qty A	Qty B	Qty C	Qty D	Qty E	I.C	Remark
1	T2540-A0102	ASSY,PEDAL	1						
2	37220-9133-1	SHAFT, BRAKE PEDAL	1						
3	37150-2842-1	STAY, PEDAL SHAFT	1						
4	34150-28431	BUSH	4						
4	34150-2843-1	BUSH	4					<------	
5	06611-15675	NIPPLE, GREASE v	1						A-M6F
6	01133-51018	BOLT dnr , v	2						M10XP1.25
7	32150-2846-1	COLLAR, BRAKE dnr v	1						T2*41*41
8	04612-00250	CIR-CLIP	1						DIA25
9	T2280-28622	PEDAL BRAKE(LH)	1						
9	T2280-28623	PEDAL(LH)BRAKE	1					<------	
10	05411-00840	PIN, SPRING	1						DIA8.6XL40
11	T2280-28612	PEDAL BRAKE(RH)	1						
11	T2280-28613	PEDAL(RH)BRAKE	1					<------	
12	37220-9108-3	ROD 1, BRAKE	2						-
13	37220-9109-3	ROD 2, BRAKE	2						
14	84612-9110-0	BUCKLE, TURN	2						OD22.2*T4*275
14	T4340-28982	TURN BUCKLE	2 D23000001 ~					<------	PI22.2 T4.0

----> Old replace New
<---- New replace Old
<-X-> Not interchangeable
<---> Interchangeable
<-O-> Interchangeable with another part(s)
* Please place an order assy(*)

https://tractormanualz.com/

T260F-T020A

BRAKE PEDAL GROUP

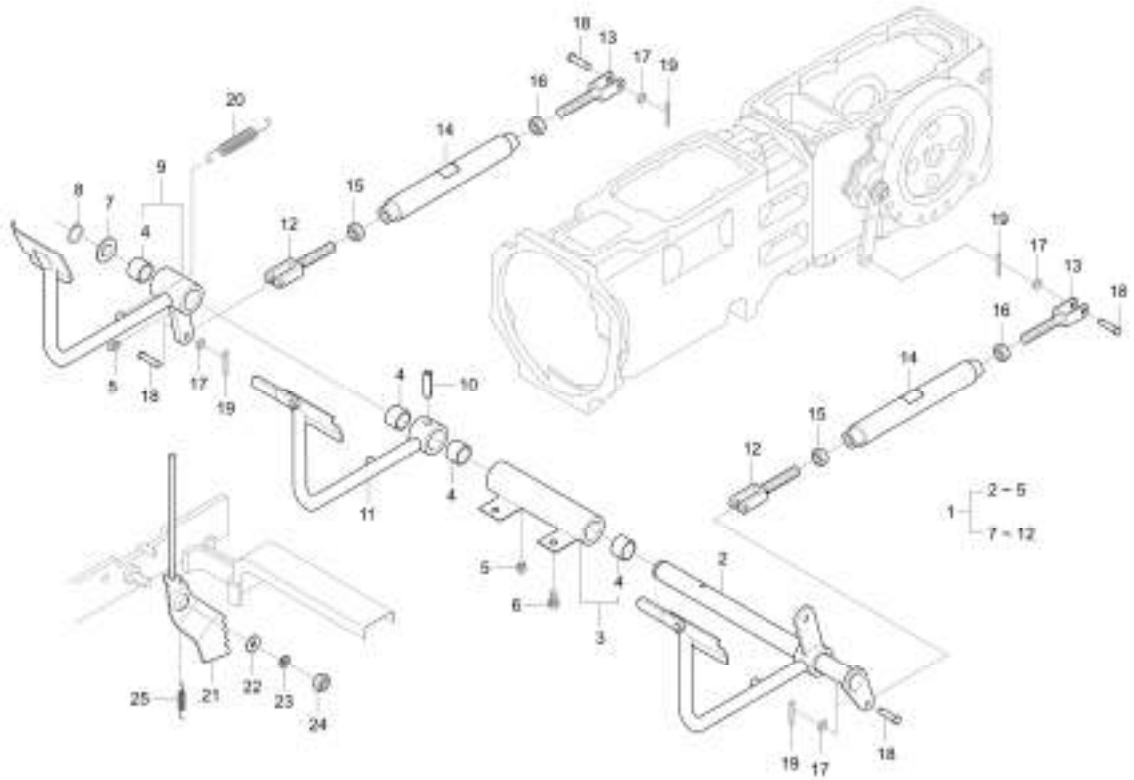

A : LK2554

No.	Part Number	Description	Qty A	Qty B	Qty C	Qty D	Qty E	I.C	Remark
15	37300-2891-2	NUT, LEFT	2						M14XP1.5 좌나사
16	02174-50140	NUT	2						M14*P1.5
16	02176-50140	NUT	2					<--O-->	M14XP1.5
17	04013-50080	WASHER	4						
18	05122-50828	JOINT PIN	4						DIA8XL28
19	05511-50220	PIN, SPLIT	4						DIA1.8XL20
20	37150-1584-2	SPRING, CLUCH HOLD	2						DIA2.6
20	76591-4319-0	SPRING, BREAK	2					<------	DIA2.6
21	T2280-28811	BRAEE PEDAL LOCK	1						
22	04013-50080	WASHER	1						
23	04512-50080	SPRING WASHER	1						M08
24	02156-50080	NUT	1						M8XP1.25
25	T2440-28851	SPRING-Parking Brake	1						

----> Old replace New
<---- New replace Old
<-X-> Not interchangeable
<---> Interchangeable
<-O-> Interchangeable with another part(s)
* Please place an order assy(*)

https://tractormanualz.com/

L2203-T040A

CLUTCH PEDAL GROUP

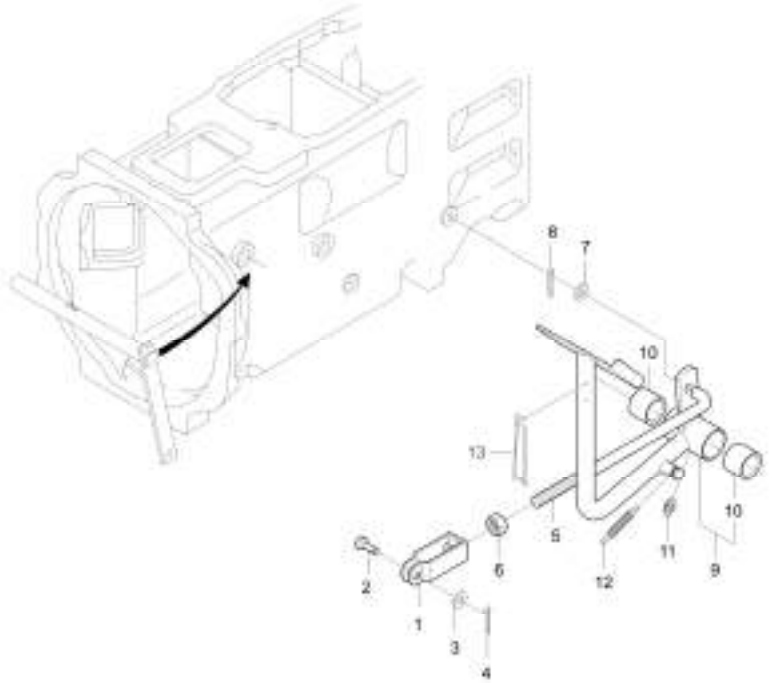

A : LK2554

No.	Part Number	Description	Qty A	Qty B	Qty C	Qty D	Qty E	I.C	Remark
1	34150-1563-2	U RINK	1						T3.2
2	05122-50822	PIN, JOINT	1						
3	04013-50080	WASHER	1						
4	05511-50220	PIN, SPLIT	1						DIA1.8XL20
5	T2280-15651	CLUTCH ROD	1						DIA12
6	02174-50120	NUT	1						M12*P1.25
7	04013-50120	PLAIN_WASHER	1						M12
8	05511-50425	PIN, SPLIT	1						DIA4*25
9	T2280-15713	PDEAL,CLUTCH	1						
9	T2280-15714	PEDAL,CLUTCH	1					<------	
10	38180-2867-1	BUSH	2						
11	06611-15675	NIPPLE, GREASE v	1						A-M6F
12	37150-1584-2	SPRING, CLUCH HOLD	1						DIA2.6
13	T2280-17991	SPRING v	1						DIA2.9
13	T2280-17992	SPRING, STOPPER obs v	1					<----->	DIA2.9

----> Old replace New
<---- New replace Old
<-X-> Not interchangeable
<---> Interchangeable
<-O-> Interchangeable with another part(s)
* Please place an order assy(*)

https://tractormanualz.com/

L2203-T050A

BONNET 1 GROUP

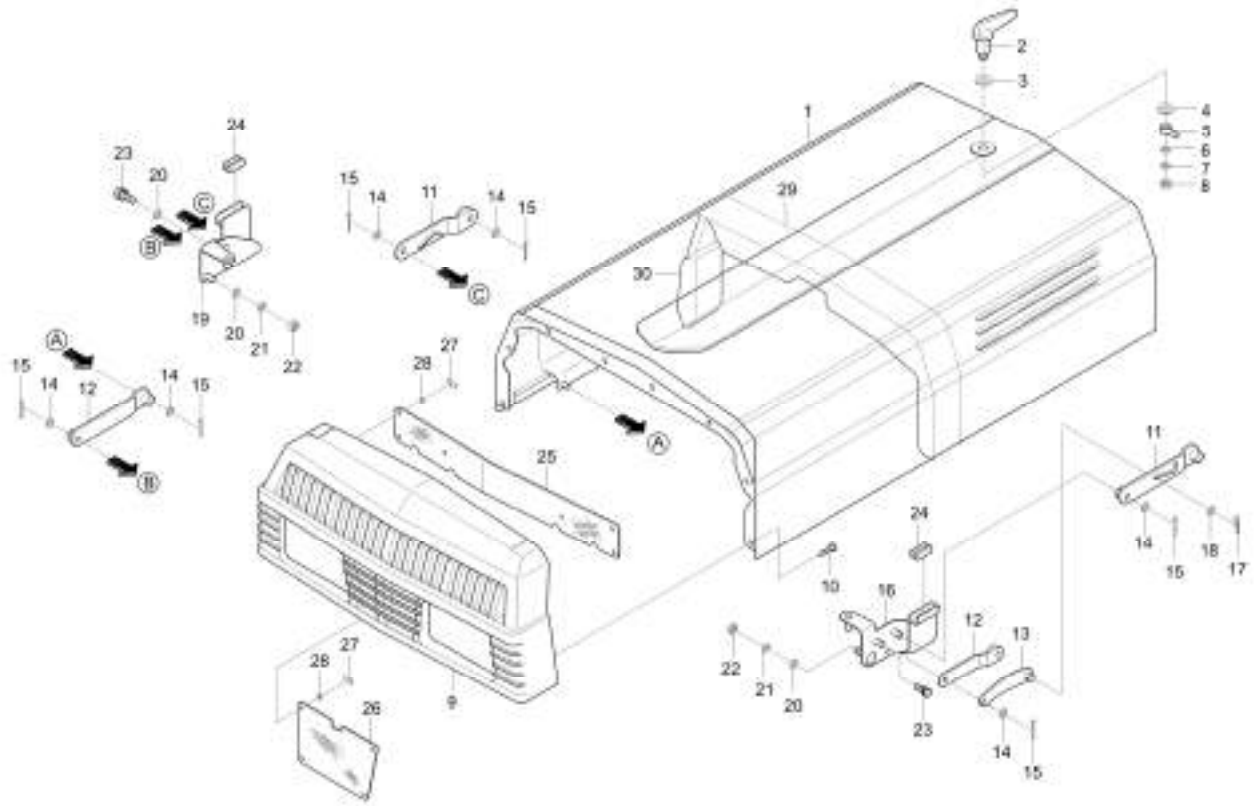

A : LK2554

No.	Part Number	Description	Qty A	Qty B	Qty C	Qty D	Qty E	I.C	Remark
1	T2540-18102	ASS'Y BONNET	1						
1	T2540-18103OE	ASS'Y BONNET v	1					<------	
1	T2540-18104OE	ASS'Y, BONNET obs v	1					<------	
2	84612-1824-0	HANDLE,BONNET COVER	1						
2	T4240-18242	HANDLE,BONNET COVER v	1					<------	
3	84612-8385-0	WASHER,HANDLE	1						T1.5*21.5*21.5
3	76KD-0168	WASHER,HANDLE	1					<------	T1.5*21.5*21.5
4	84612-8395-0	SPRING, PLATE	1						T1.2*21.5*21.5
5	84612-1825-0	LEVER, BONNET HANDLE	1						
6	04012-50080	WASHER, PLAIN	1						M8
7	04512-50080	SPRING WASHER	1						M08
8	02112-50080	NUT	1						M8*P1.25
8	02114-50080	NUT v	1 (123000001 ~)					<----->	M8*P1.25
9	T2540-84151	GRIL,HEAD LAMP v	1						
9	T2540-84153OE	GRILL,HEADLAMP v	1					<------	
10	84612-1823-0	SCREW obs v	8						M6X16
11	T2540-18143	LINK BONNET REAR	2						
12	T2540-18132	LINK,BONNET FRONT	2						

----> Old replace New
<---> Interchangeable
* Please place an order assy(*)
<---- New replace Old
<-O-> Interchangeable with another part(s)
<-X-> Not interchangeable

https://tractormanualz.com/

L2203-T050A

BONNET 1 GROUP

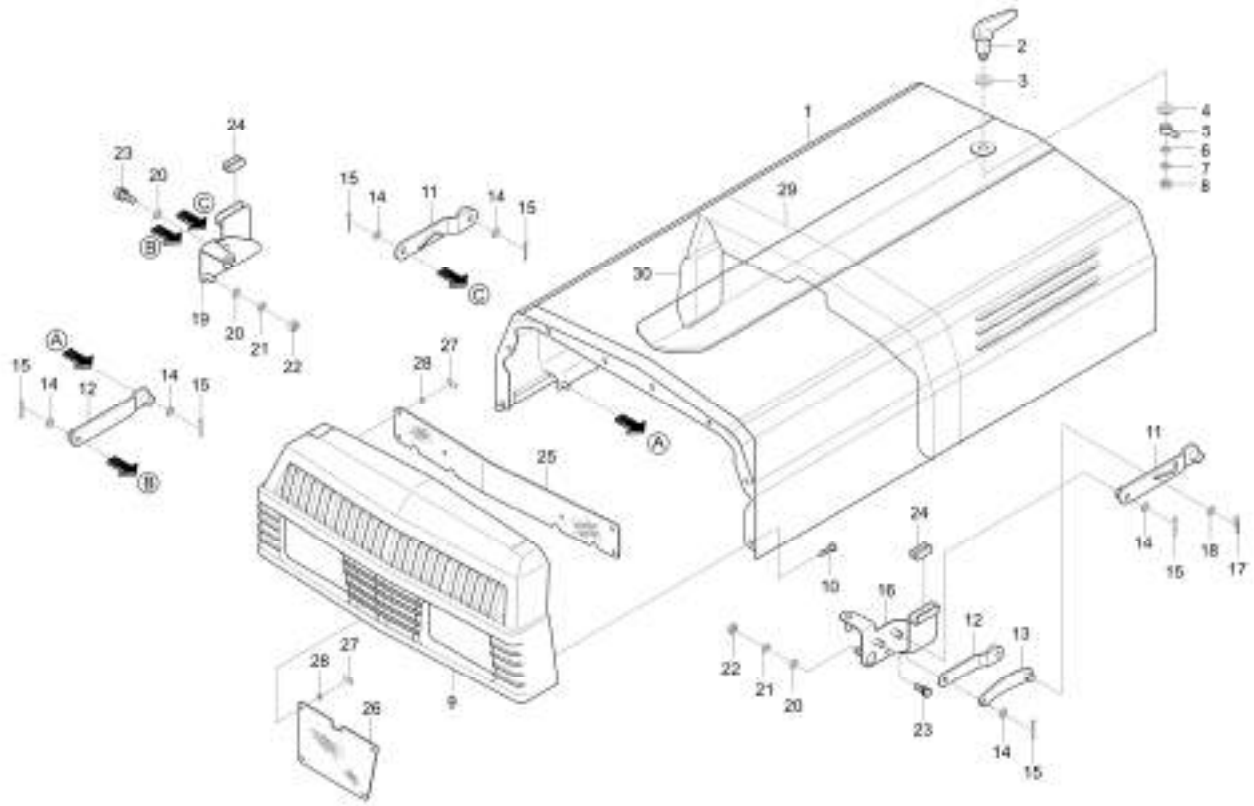

A : LK2554

No.	Part Number	Description	Qty A	Qty B	Qty C	Qty D	Qty E	I.C	Remark
13	T2540-18673	LINK,BONNET LOCK	1						
14	04013-50080	WASHER	8						
15	05511-50218	PIN, SPLIT	8						DIA1.8XL18
16	T2540-18263	SUPPORT,LINK LH	1						
16	T2540-18264	SUPPORT LINK(LH) obs v	1					<----->	
17	05515-50600	PIN, SNAP	1						
18	04013-50060	WASHER, PLAIN	1						M6
19	T2540-18253	SUPPORT,LINK RH	1						
19	T2540-18254	SUPPORT LINK(RH) v	1					<----->	
20	04013-50080	WASHER	4						
21	04512-50080	SPRING WASHER	2						M08
22	02114-50080	NUT v	2						M8*P1.25
23	01123-50820	BOLT, WASHER v	2						M8XP1.25
24	T2305-18271	CUSHION	2						
25	T2540-18181OE	NET,HEADLAMP GRILL 1	1						T0.8
26	T2540-18171GY	NET,HEADLAMP GRILL 2 v	1						T0.8
27	82KC-0640	PLATE,RUBBER	13						T0.4
28	82KC-0641	PLATE,RUBBER	13						

----> Old replace New
<---- New replace Old
<-X-> Not interchangeable
<---> Interchangeable
<-O-> Interchangeable with another part(s)
* Please place an order assy(*)

https://tractormanualz.com/

L2203-T050A

BONNET 1 GROUP

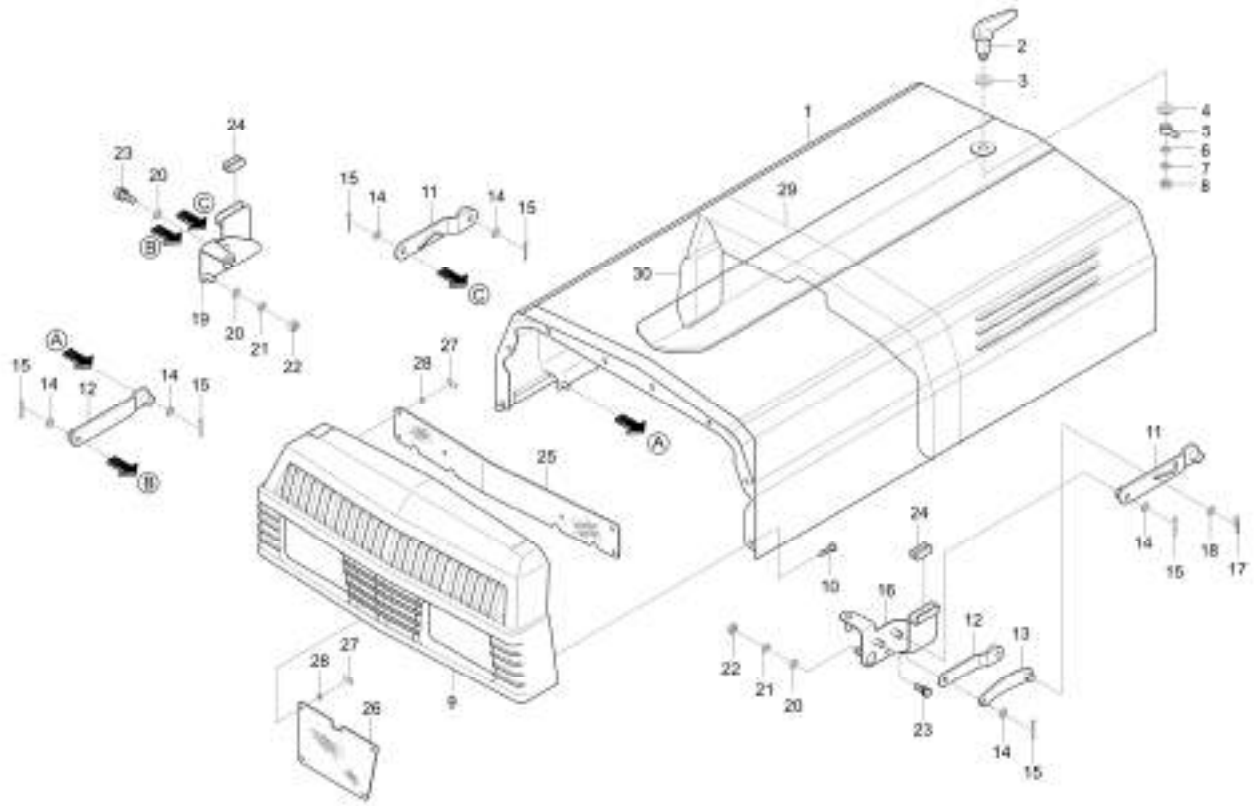

A : LK2554

No.	Part Number	Description	Qty A	Qty B	Qty C	Qty D	Qty E	I.C	Remark
29	T2540-17841	SPONGE	1						T60
30	T2540-17811	SPONGE	2						T60

----> Old replace New
<----> Interchangeable
* Please place an order assy(*)
<---- New replace Old
<-O-> Interchangeable with another part(s)
<-X-> Not interchangeable

https://tractormanualz.com/

T220F-T060A

BONNET 2 GROUP

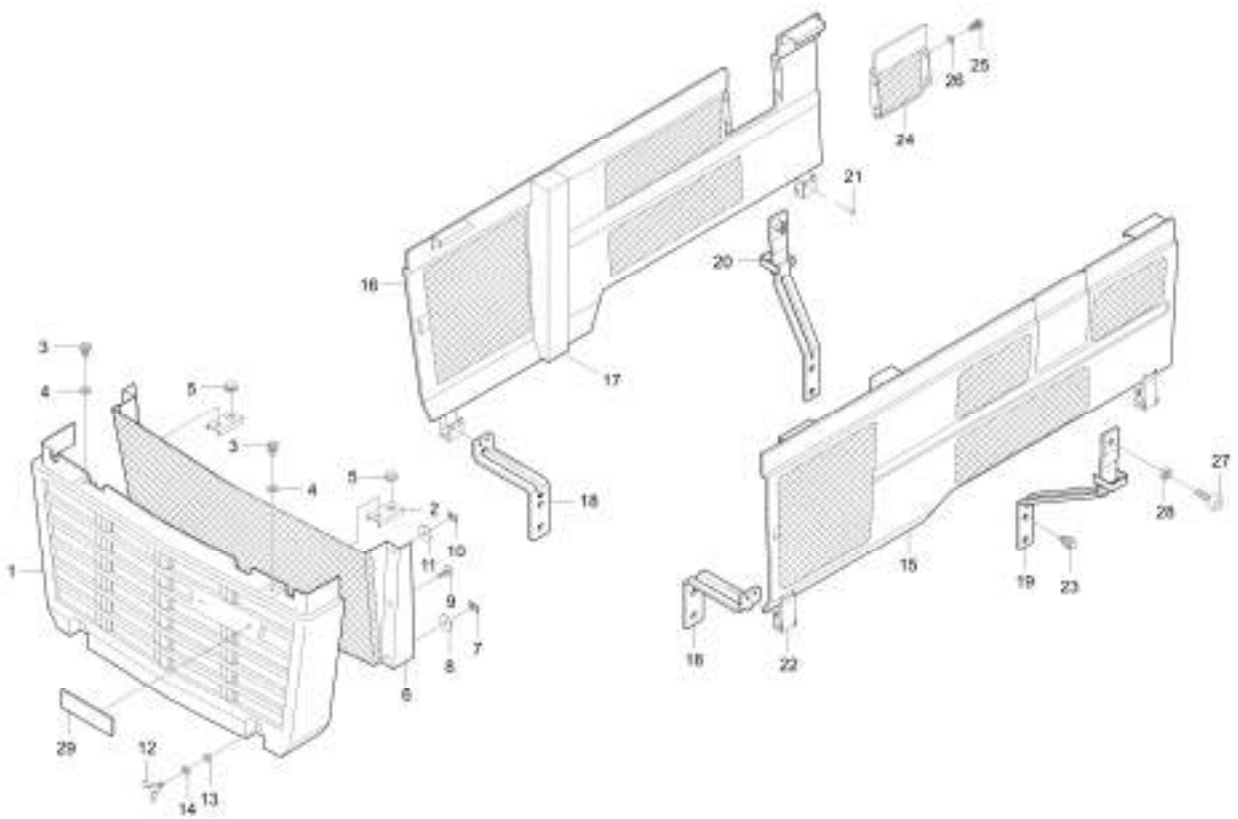

A : LK2554

No.	Part Number	Description	Qty A	Qty B	Qty C	Qty D	Qty E	I.C	Remark
1	T2540-18191OE	GRILL,FRONT v	1						
2	T2540-18282	RETAINER,FRONT GRILL	2						
3	01202-50614	BOLT, WASHER	2						4T
4	04013-50060	WASHER, PLAIN	2						M6
4	04015-50060	WASHER, PLAIN	2					<------	M6
5	84612-1822-0	CUSHION	2						
6	T2540-18161OE	NET,FRONT GRILL v	1						
7	82KC-0640	PLATE,RUBBER	12						T0.4
8	82KC-0641	PLATE,RUBBER	12						
9	84612-1823-0	SCREW obs v	6						M6X16
10	82KC-0640	PLATE,RUBBER	2						T0.4
11	82KC-0641	PLATE,RUBBER	2						
12	01811-50612	BOLT, WING	2						M6P1.0
13	04013-50060	WASHER, PLAIN	2						M6
14	04512-50060	WASHER, SPRING	2						M06
15	T2540-18852	COVER,SIDE LH v	1						
15	T2540-18853OE	COVER,SIDE LH v	1					<------	
16	T2540-18862	COVER,SIDE RH v	1						

----> Old replace New
<---> Interchangeable
* Please place an order assy(*)
<---- New replace Old
<-O-> Interchangeable with another part(s)
<-X-> Not interchangeable

https://tractormanualz.com/

T220F-T060A

BONNET 2 GROUP

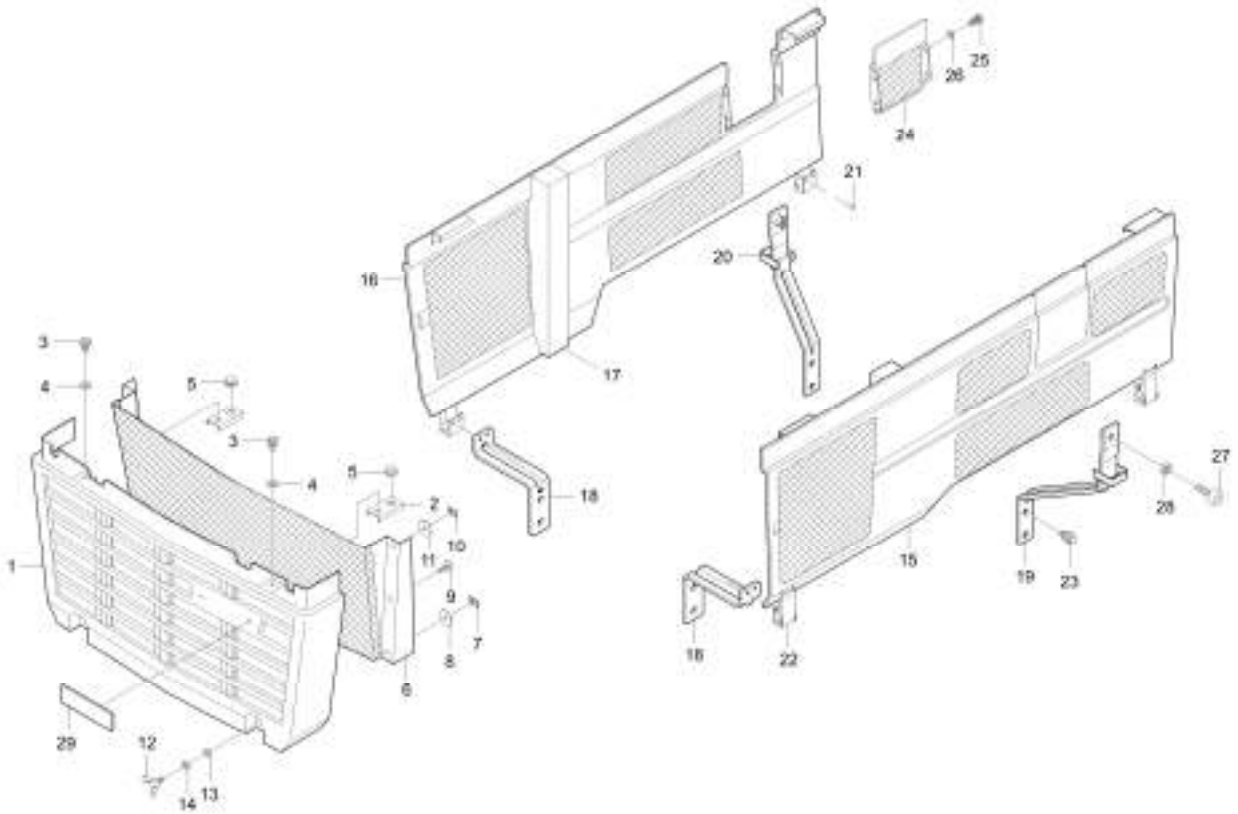

A : LK2554

No.	Part Number	Description	Qty A	Qty B	Qty C	Qty D	Qty E	I.C	Remark
16	T2540-18863OE	COVER,SIDE RH obs v	1					<------	
17	T2540-17891	SPONGE	2						T40
18	T2280-18711	HOLDER,SIDE COVER FRONT	1						T4.5*32
18	T2280-18711GY	HOLDER,SIDE COVER FRONT	2					<------	T4.5*32
19	T2540-18732	HOLDER,SIDE COVER (RE) v	1						T4.0
19	T2280-18732GY	HOLDER,SIDE COVER(REAR,LH) v	1					<------	T4.0
20	T2540-18742	HOLDER,SIDE COVER(REAR,RH)	1						T4.0
20	T2280-18742GY	HOLDER,SIDE COVER(REAR,RH)	1 923000001 ~					<------	T4.0
21	05621-10514	RIVET	8						
22	T2540-18751	ASS'Y HOOK	4						
23	01153-50820	BOLT	8						M8*P1.25
23	01123-50816	Hex Head Cap Screw	8					<------	M8XP1.25
24	T2545-18871	COVER	1						
25	01023-50616	BOLT, WASHER	4						M6XP1.0
26	04013-50060	WASHER, PLAIN	4						M6
27	T4260-19221	BOLT,CUSHION	1						
28	03014-50830	SCREW	1						M8*1.25
29	94612-1826-1	LABEL, KIOTI	1						

----> Old replace New <---- New replace Old <-X-> Not interchangeable
<---> Interchangeable <-O-> Interchangeable with another part(s)
* Please place an order assy(*)

https://tractormanualz.com/

L2203-T070A

BONNET 3 GROUP

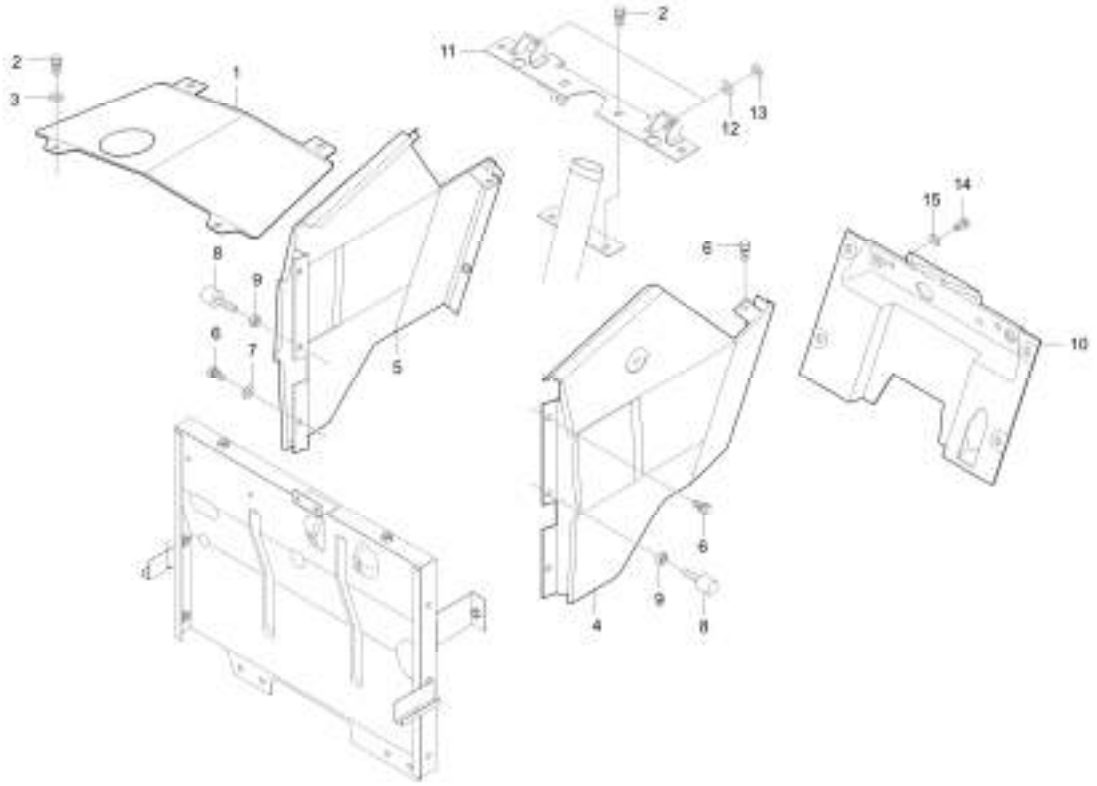

A : LK2554

No.	Part Number	Description	Qty A	Qty B	Qty C	Qty D	Qty E	I.C	Remark
1	T2540-18771OE	COVER,PANEL FRONT	1						T1.0
2	01120-50814	BOLT, WASHER	2						
2	01123-50816	Hex Head Cap Screw	10 623000001 ~					<----->	M8XP1.25
3	04013-50080	WASHER	2						
4	T2540-18811	COVER,PANEL LH	1						
4	T2540-18812	COVER,PANEL LH	1					<------	
4	T2540-18813	COVER,PANEL(LH)	1 123000001 ~					<------	
5	T2540-18821	COVER,PANEL RH	1						
5	T2540-18822	COVER,PANEL RH	1					<------	
5	T2540-18823	COVER (RH), INSTRUMENT v	1 123000001 ~					<------	
6	01120-50814	BOLT, WASHER	4						
7	04013-50080	WASHER	4						
8	T2305-18222	BOLT,CUSHION	2						
9	02114-50080	NUT v	2						M8*P1.25
10	T2540-18841	COVER, PANEL REAR obs v	1						
11	T2540-18883	SUPPORT,PANEL COVER	1						
11	T2540-18884	COVER SUPPORT PANEL v	1					<------	
11	T2540-18885	SUPPORT, INSTRUMENT METER	1					<----->	

----> Old replace New
<---- New replace Old
<-X-> Not interchangeable
<---> Interchangeable
<-O-> Interchangeable with another part(s)
* Please place an order assy(*)

https://tractormanualz.com/

L2203-T070A

BONNET 3 GROUP

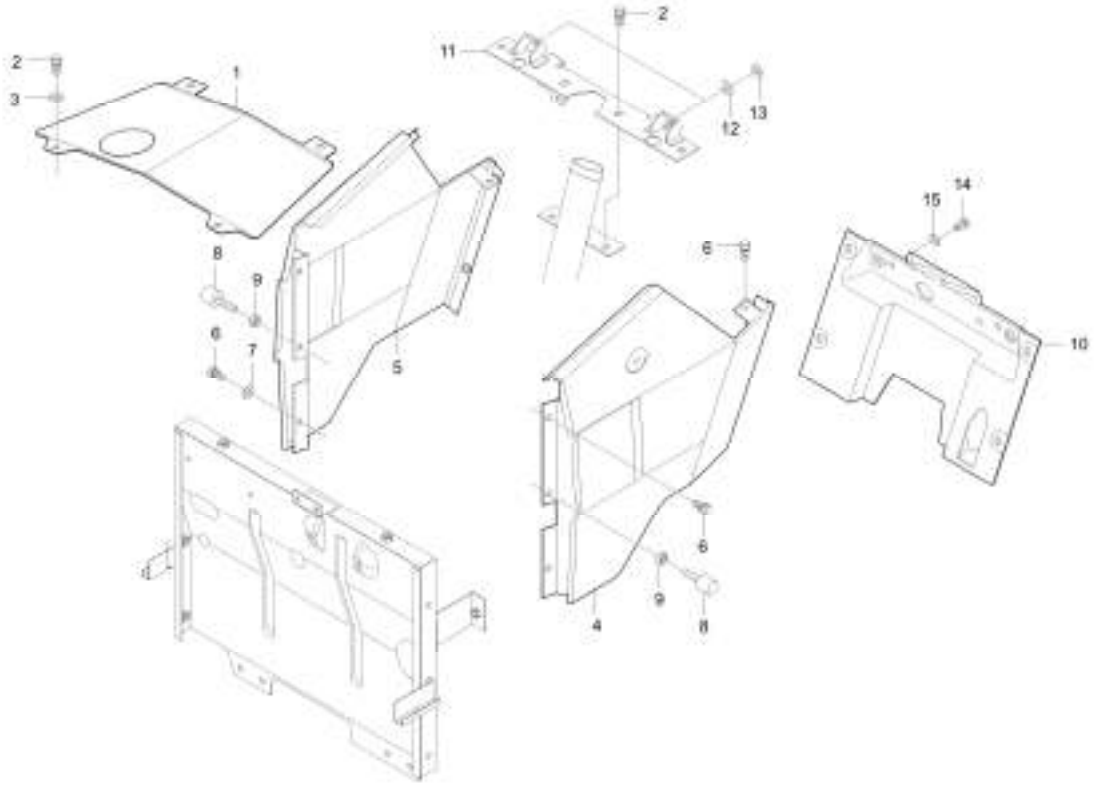

A : LK2554

No.	Part Number	Description	Qty A	Qty B	Qty C	Qty D	Qty E	I.C	Remark
12	54207-6325-1	RUBBER, CUSHION	2						
13	04013-50080	WASHER	2						
14	T2540-41251	SCREW	6						M8*1.25
15	04013-50080	WASHER	8						

----> Old replace New
<---> Interchangeable
* Please place an order assy(*)
<---- New replace Old
<-O-> Interchangeable with another part(s)
<-X-> Not interchangeable

https://tractormanualz.com/

LK2554-T080A

FENDER GROUP

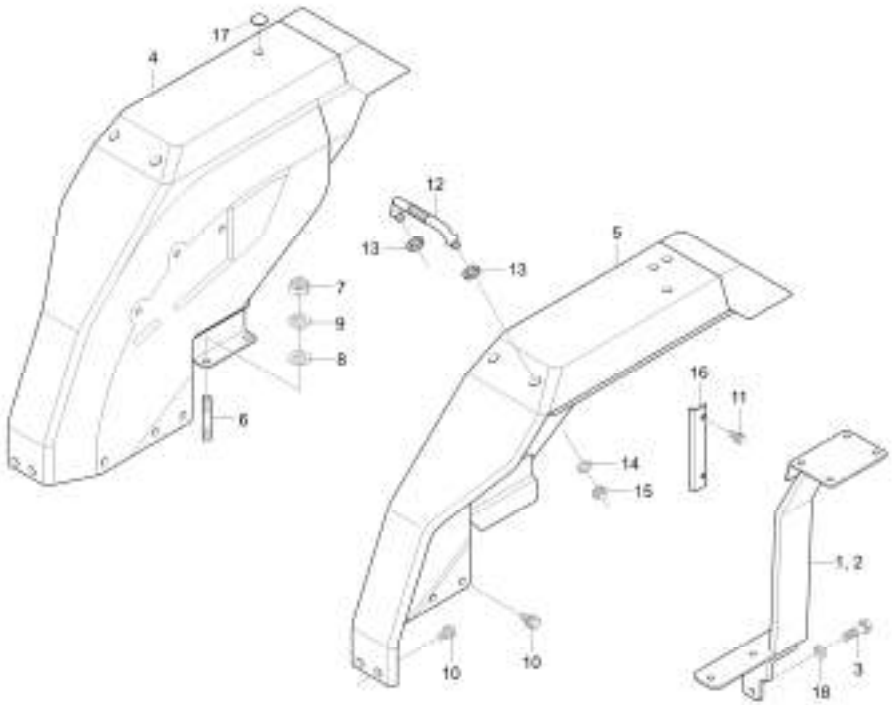

A : LK2554

No.	Part Number	Description	Qty A	Qty B	Qty C	Qty D	Qty E	I.C	Remark
1	T2280-29222	SUPPORT(LH)FENDER	1						
2	T2280-29232	SUPPORT(RH) FENDER	1						
3	T2230-85242	BOLT	4						M14*2.0*32
4	T2280-29105	OBSOLETE - FENDER (RH)	1						
4	T2280-29105OE	FENDER(RH)	1					<------	
5	T2280-29205	FENDER(LH)	1						
5	T2280-29205OE	FENDER(LH)	1					<------	
6	01574-51232	OBSOLETE STUD	4						M12*1.25*32
7	02176-50120	NUT	4						M12XP1.25
8	04013-50120	PLAIN_WASHER	8						M12
9	04512-50120	SPRING_WASHER v	4						M12
10	01754-50812	BOLT, FLANGE	14						M8XP1.25
11	01123-50820	BOLT, WASHER v	6						M8XP1.25
12	T4240-29173	BALUSTRADE	2						
13	32260-2918-2	CUSHION	4						
14	04013-50140	WASHER, PLAIN	4						M14
15	02174-50140	NUT	4						M14*P1.5
16	T2280-29891	RETANER	2						T1.2

----> Old replace New
<---- New replace Old
<-X-> Not interchangeable
<---> Interchangeable
<-O-> Interchangeable with another part(s)
* Please place an order assy(*)

https://tractormanualz.com/

LK2554-T080A

FENDER GROUP

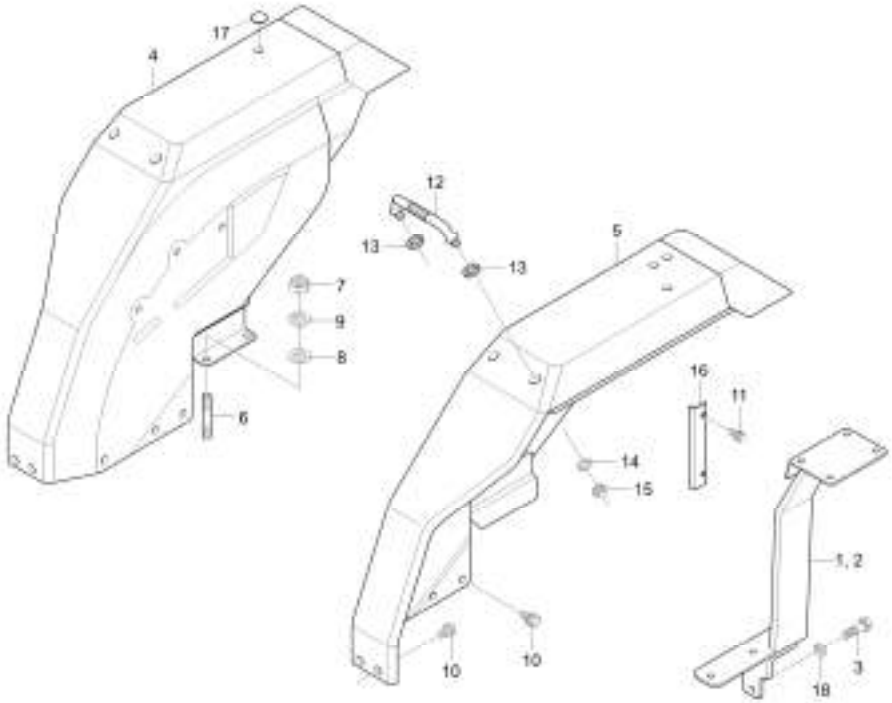

A : LK2554

No.	Part Number	Description	Qty A	Qty B	Qty C	Qty D	Qty E	I.C	Remark
17	T4260-87511	COVER LABEL v	2						
18	04513-50140	WASHER,SPRING v	4						

----> Old replace New
<---> Interchangeable
* Please place an order assy(*)
<---- New replace Old
<-O-> Interchangeable with another part(s)
<-X-> Not interchangeable

https://tractormanualz.com/

T260F-T090A

STEP GROUP

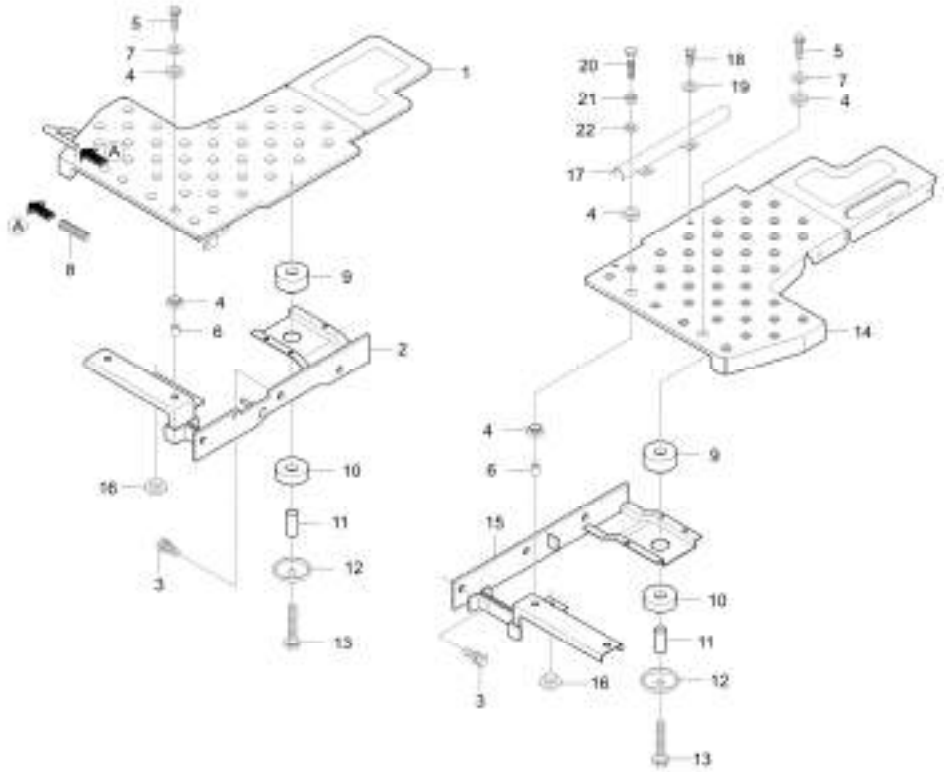

A : LK2554

No.	Part Number	Description	Qty A	Qty B	Qty C	Qty D	Qty E	I.C	Remark
1	T2262-29921	ASSY,STEP(RH)	1						
2	T2280-29511	SUPPORT STEP (RH)	1						
3	01133-51020	BOLT	6						M10XP1.25
4	31355-2958-1	CUSHION	8						
5	01123-50830	BOLT, WASHER	4						M8P1.25*30
5	01754-50830	BOLT FLANGE	3					<------	M8XP1.25
6	T4240-29591	SPACER	4						DIA12
7	04015-50080	WASHER, PLAIN	4						M8
8	32435-1759-1	RUBBER	1						DIA15.0
8	T4240-17592	RUBBER	1					<------	
9	31355-2926-1	CUSHION, UPR	2						
10	T2440-29271	CUSHION,LOWER	2						
11	T2440-29281	COLLER	2						DIA17.3*T2.3
11	T2440-29282	COLLER	2					<------	
12	T2445-29311	RETAINER	2						T2.3
13	01774-51260	BOLT, FLANGE	2						
14	T2262-29911	ASSY,STEP(LH)	1						
15	T2280-29521	SUPPORT STEP (LH) v	1						

----> Old replace New <---- New replace Old <-X-> Not interchangeable
<---> Interchangeable <-O-> Interchangeable with another part(s)
* Please place an order assy(*)

https://tractormanualz.com/

T260F-T090A

STEP GROUP

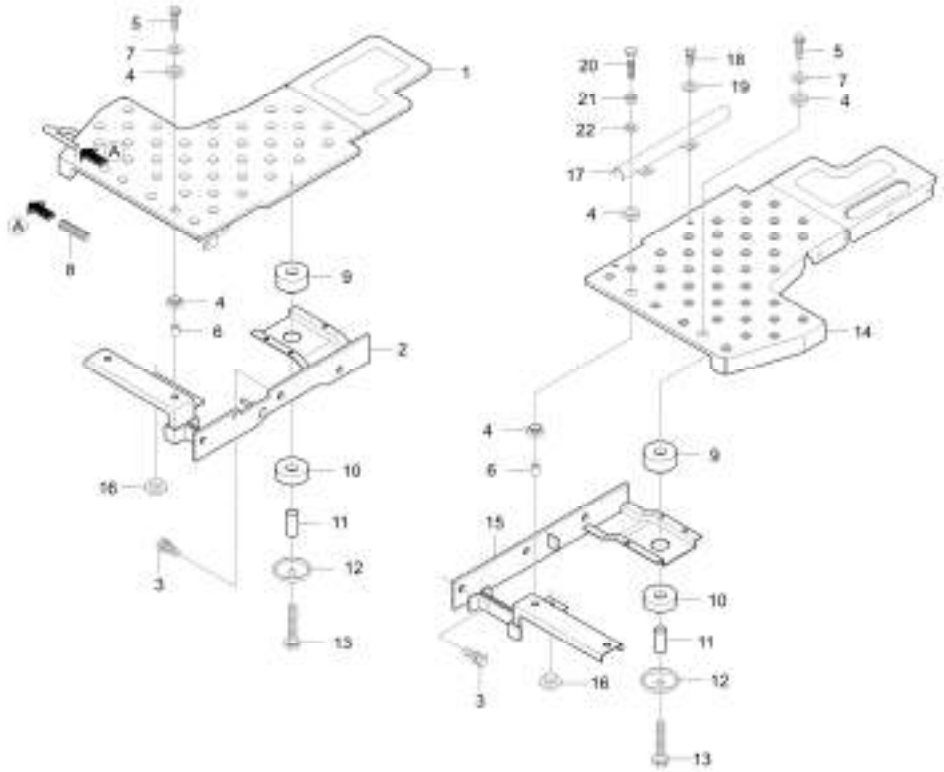

A : LK2554

No.	Part Number	Description	Qty A	Qty B	Qty C	Qty D	Qty E	I.C	Remark
15	T2280-29522	SUPPORT STEP(LH) v	1					<------	
15	T2280-29523	SUPPORT STEP (LH) v	1					<------	
16	T2305-15871	RUBBER, CUSHION STEP SUPPORT	3						
17	T2540-29901	RETAINER	1						T1.0
17	T2540-29902	RETAINER	1					<------	T1.0
17	T2540-29903	RETANER,CORD	1					<------	T1.0
17	T2540-29904	RETAINER OBS V	1					<------	T1.0
18	01023-50614	BOLT, WASHER	2						M6P1.0
19	04013-50060	WASHER, PLAIN	2						M6
20	01155-50860	OB-BOLT v	1						
21	02114-50080	NUT v	1						M8*P1.25
22	04512-50080	SPRING WASHER	1						M08

----> Old replace New <---- New replace Old <-X-> Not interchangeable
<---> Interchangeable <-O-> Interchangeable with another part(s)
* Please place an order assy(*)

https://tractormanualz.com/

LK2552-T110A

LABEL GROUP

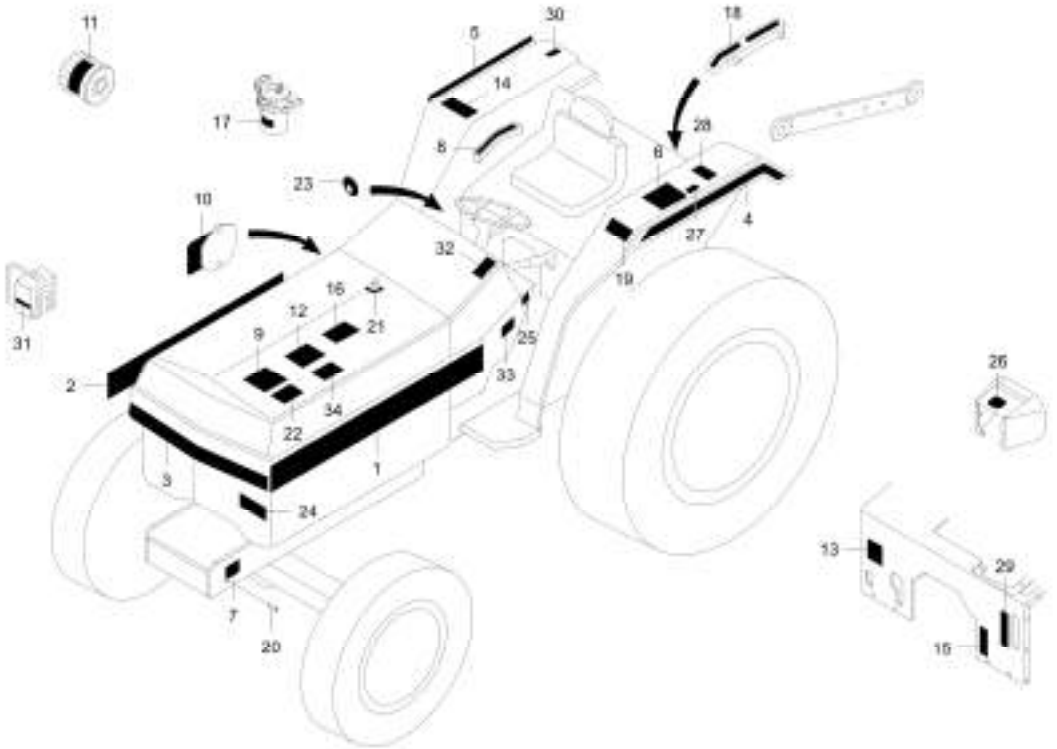

A : LK2554

No.	Part Number	Description	Qty A	Qty B	Qty C	Qty D	Qty E	I.C	Remark
1	T2215-50541	LABEL(LH),NAME	1						
2	T2215-50551	LABEL(RH),NAME	1						
3	T2540-50362	LABEL,NAME FRONT	1						
4	T2540-50032	LABEL,FENDER LH v	1						
5	T2540-50042	LABEL,FENDER RH v	1						
6	94612-9125-1	LABEL, SPEED	1						
7	T2265-18303	LABEL	1						(T0.5)
8	T2445-36982	LABEL,POSITION CONTROL	1						T0.5
9	94612-9104-1	LABEL, LUBRICATING OIL	1						
10	94612-1836-1	LABEL, VALVE	1						
11	T2565-94401	LABEL	1						
12	94612-9459-1	OIL CHANGE LABEL	1						
13	T2611-26692	LABEL, DIFFERENTIAL FIXING v	1						
14	T2325-50512	LABEL, SAFETY	1						
15	94612-4817-1	LABEL, FWD	1						T0.05-0.07
16	94612-9361-1	LABEL, RADIATOR	1						
17	T2325-50192	LABEL, FUEL FILTER	1						
18	T2280-24951	LABEL	1						T0.05-0.08

----> Old replace New <---- New replace Old <-X-> Not interchangeable
<---> Interchangeable <-O-> Interchangeable with another part(s)
* Please place an order assy(*)

https://tractormanualz.com/

LK2552-T110A

LABEL GROUP

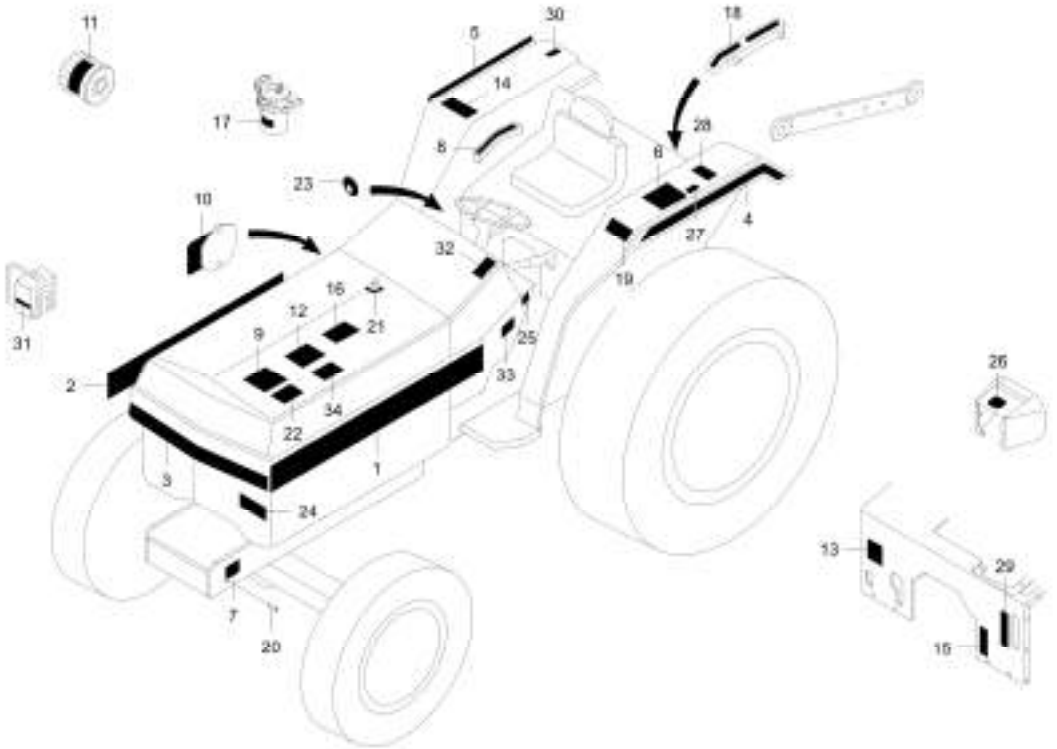

A : LK2554

No.	Part Number	Description	Qty A	Qty B	Qty C	Qty D	Qty E	I.C	Remark
19	38430-4529-2	LABEL, STEERING	1						T0.05-0.08
20	05624-20408	RIVET	8						
21	T2541-94021	LABEL,BONNET LOCK	8						
22	T2541-94011	LABEL,BONNET CLOSE	1						
23	94612-5515-1	LABEL, START SWITCH	1						T0.5
24	94612-1826-1	LABEL, KIOTI	1						
25	94612-2328-2	LABEL, MAIN SHIFT	1						T0.5
26	T2325-50743	LABEL, PTO CAUTION	1						T0.05-0.08
27	T2241-50702	LABEL, REMINDER	1						
28	T2445-50724	LABEL, ROPS WARNING	1						T0.05-0.08
29	T2265-24581	LEBEL PTO	1						
30	T4260-87511	COVER LABEL v	1						
31	T2541-88212	LABEL,COOLING WATER	1						
32	T2615-54112	LABEL, FUEL WARNING v	1						T0.05-0.08
33	T2615-55112	LABEL, MUFFLER CAUTION	1						
34	T2615-53561	LABEL, RADIATOR	1						

----> Old replace New
<---- New replace Old
<-X-> Not interchangeable
<---> Interchangeable
<-O-> Interchangeable with another part(s)
* Please place an order assy(*)

https://tractormanualz.com/

LK2554-T110A

LABEL GROUP

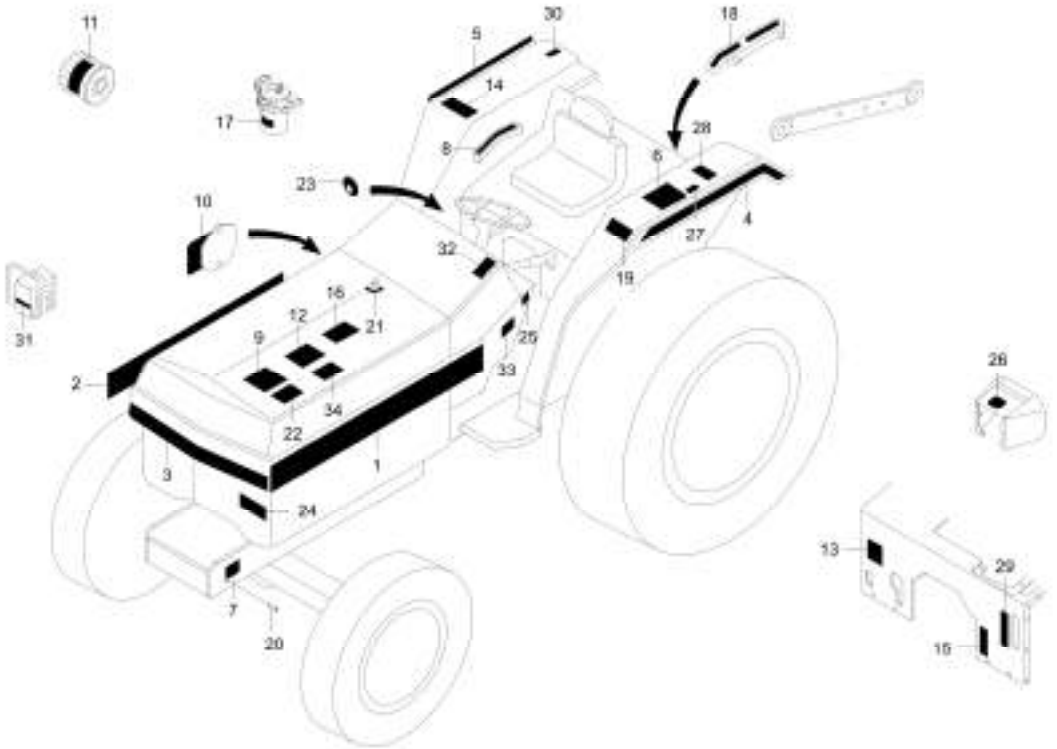

A : LK2554

No.	Part Number	Description	Qty A	Qty B	Qty C	Qty D	Qty E	I.C	Remark
1	T2265-50541	LEBEL(LKH)NAME	1						
2	T2265-50551	LEBEL(RH)NAME	1						
3	T2540-50362	LABEL,NAME FRONT	1						
4	T2540-50032	LABEL,FENDER LH v	1						
5	T2540-50042	LABEL,FENDER RH v	1						
6	94612-9125-1	LABEL, SPEED	1						
7	T2265-18303	LABEL	1						(T0.5)
8	T2445-36982	LABEL,POSITION CONTROL	1						T0.5
9	94612-9104-1	LABEL, LUBRICATING OIL	1						
10	94612-1836-1	LABEL, VALVE	1						
11	T2565-94401	LABEL	1						
12	94612-9459-1	OIL CHANGE LABEL	1						
13	T2611-26692	LABEL, DIFFERENTIAL FIXING v	1						
14	T2325-50512	LABEL, SAFETY	1						
15	94612-4817-1	LABEL, FWD	1						T0.05-0.07
16	94612-9361-1	LABEL, RADIATOR	1						
17	T2325-50192	LABEL, FUEL FILTER	1						
18	T2280-24951	LABEL	1						T0.05-0.08

----> Old replace New <---- New replace Old <-X-> Not interchangeable
<---> Interchangeable <-O-> Interchangeable with another part(s)
* Please place an order assy(*)

https://tractormanualz.com/

LK2554-T110A

LABEL GROUP

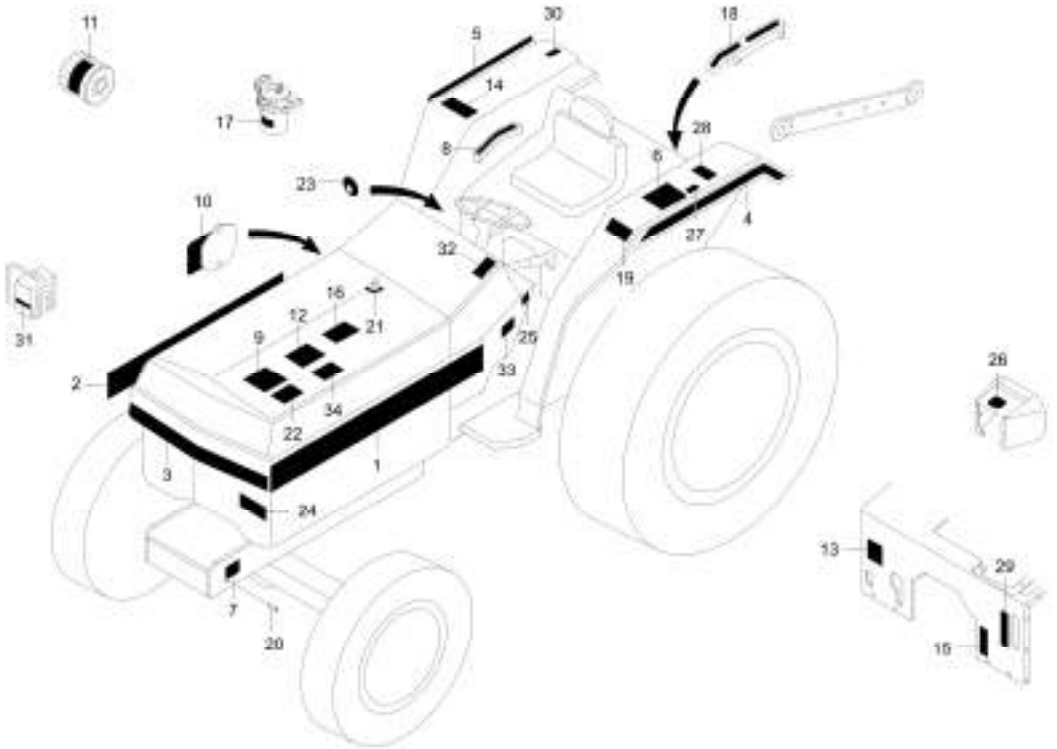

A : LK2554

No.	Part Number	Description	Qty A	Qty B	Qty C	Qty D	Qty E	I.C	Remark
19	38430-4529-2	LABEL, STEERING	1						T0.05-0.08
20	05624-20408	RIVET	8						
21	T2541-94021	LABEL,BONNET LOCK	1						
22	T2541-94011	LABEL,BONNET CLOSE	1						
23	94612-5515-1	LABEL, START SWITCH	1						T0.5
24	94612-1826-1	LABEL, KIOTI	1						
25	94612-2328-2	LABEL, MAIN SHIFT	1						T0.5
26	T2325-50743	LABEL, PTO CAUTION	1						T0.05-0.08
27	T2241-50702	LABEL, REMINDER	1						
28	T2445-50724	LABEL, ROPS WARNING	1						T0.05-0.08
29	T2265-24581	LEBEL PTO	1						
30	T4260-87511	COVER LABEL v	1						
31	T2541-88212	LABEL,COOLING WATER	1						
32	T2615-54112	LABEL, FUEL WARNING v	1						T0.05-0.08
33	T2615-55112	LABEL, MUFFLER CAUTION	1						
34	T2615-53561	LABEL, RADIATOR	1						

----> Old replace New
<---- New replace Old
<-X-> Not interchangeable
<---> Interchangeable
<-O-> Interchangeable with another part(s)
* Please place an order assy(*)

https://tractormanualz.com/

L2203-T200A

FRONT AXLE FRAME GROUP

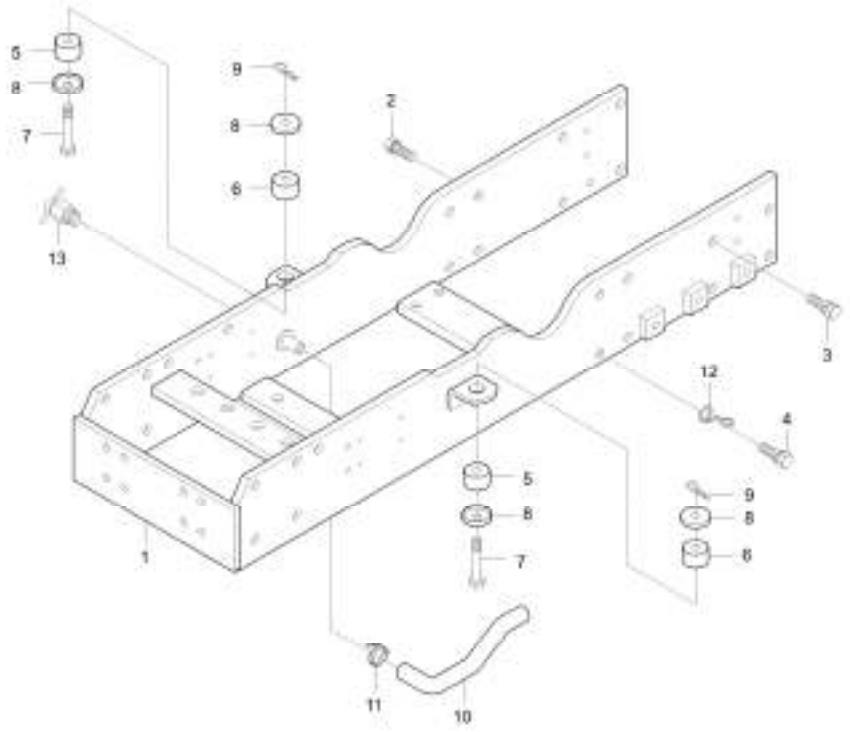

A : LK2554

No.	Part Number	Description	Qty A	Qty B	Qty C	Qty D	Qty E	I.C	Remark
1	T2280-44711	FRAME,FRONT AXLE	1						
1	T2280-44712	FRAME, FRONT AXLE	1 623000001 ~					<------	
1	T2280-44713	FRAME, FRONT AXLE	1					<------	
1	T2280-44714	FRAME, FRONT AXLE	1 023000001 ~					<------	
2	01173-51235	BOLT	13						M12P1.25*35
2	01133-51235	WASHER BOLT	13 723000001 ~					<----->	M12XP1.25
3	01173-51030	Hex Head Bolt, 10mmx30mm	1						M10XP1.25
3	01133-51030	BOLT, WASHER	1 723000001 ~					<----->	M10XP1.25
4	01173-51250	BOLT	2						M12P1.25*50
4	01133-51250	BOLT	2 723000001 ~					<----->	
5	15111-7218-1	CUSHION, RADIATOR	2						
6	15111-7219-1	CUSHION, RADIATOR	2						
7	15108-7238-1	BOLT	2						HEX14*70
7	15108-7238-2	BOLT, RADIATOR	2					<----->	M10*60*P1.25
8	15111-7220-2	WASHER	4						T1.6
8	T2240-13202	WASHER, RADIATOR	4					<----->	T1.6
9	05515-51000	CIR CLIP	2						DIA10
10	T2540-13511	HOSE,DRAIN	1						

----> Old replace New
<---- New replace Old
<-X-> Not interchangeable
<---> Interchangeable
<-O-> Interchangeable with another part(s)
* Please place an order assy(*)

https://tractormanualz.com/

L2203-T200A

FRONT AXLE FRAME GROUP

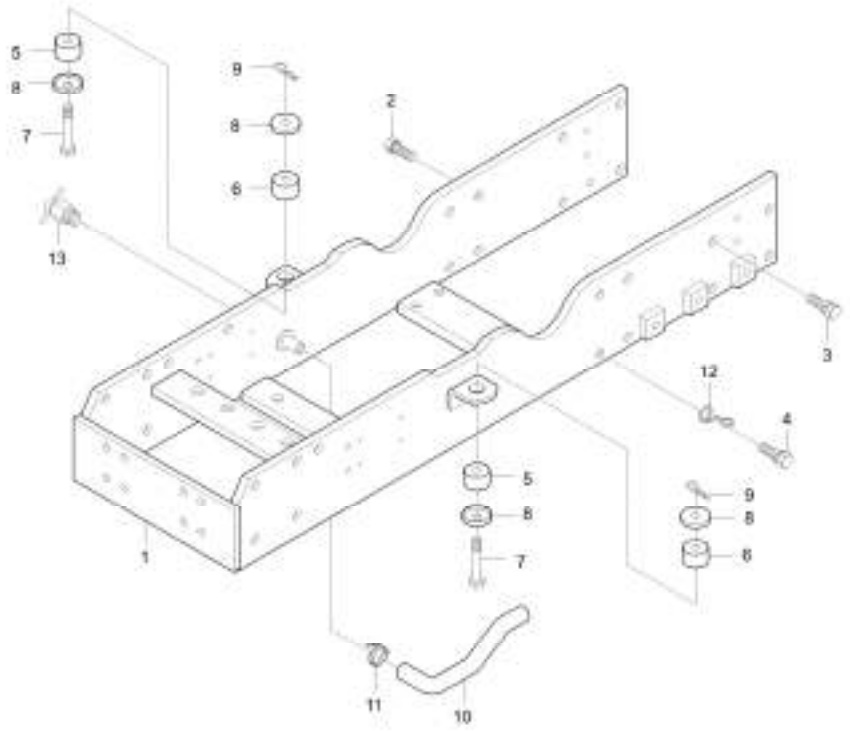

A : LK2554

No.	Part Number	Description	Qty A	Qty B	Qty C	Qty D	Qty E	I.C	Remark
11	15109-7336-4	CLAMP, HOSE obs v	2						철 사19#
11	E5700-73361	BAND, HOSE obs v	2					<----->	
12	15341-0559-1	CLAMP	1						DIA2*106
13	76KD-0121-2	COCK, DRAIN	1						

----> Old replace New
<---- New replace Old
<-X-> Not interchangeable
<---> Interchangeable
<-O-> Interchangeable with another part(s)
* Please place an order assy(*)

https://tractormanualz.com/

L2203-T230A

FRONT DRIVE SHIFT GROUP

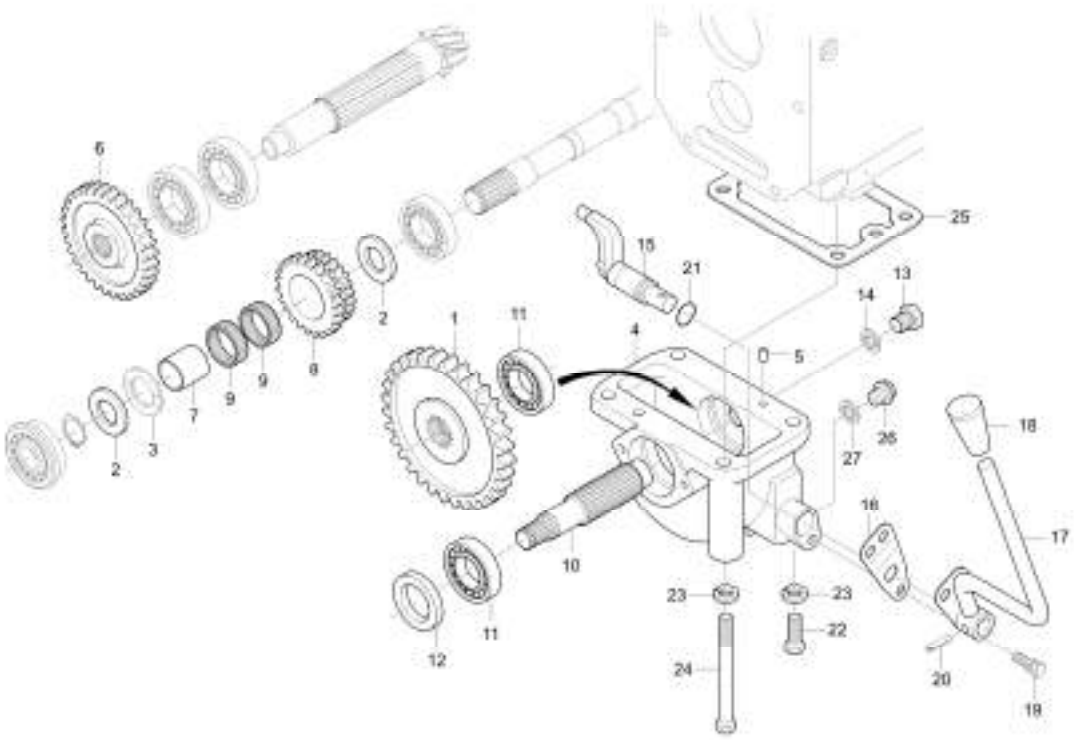

A : LK2554

No.	Part Number	Description	Qty A	Qty B	Qty C	Qty D	Qty E	I.C	Remark
1	37720-4423-0	GEAR, 45	1						
2	37150-2538-0	COLLAR	2						OD40*T1.8
3	37650-4428-1	COLLAR, THRUST	1						OD40*T2.0
4	37720-4411-1	CASE, 4WD obs v	1						4.4KG
4	T2240-44112	CASE,FRONT DRIVE	1					<----->	
5	05012-01018	PIN, STRAIGHT	2						DIA10XL18
6	37720-4415-0	GEAR, 31	1						
7	37650-4417-0	INNER, LACE	1						IR25*30*30
8	37720-4418-1	GEAR, 21X18	1						
9	08823-03614	BEARING,NEEDLE	2						KMJ30*36*14
10	37650-4419-0	SHAFT, FRONT DRIVE	1						DIA71*28
11	08101-06304	BALL BEARING	2						#6304
12	38440-4424-0	SEAL OIL v	1						
13	34150-1426-1	PLUG, OIL DRAIN v	1						DIA30X34
14	04717-02150	WASHER,SEAL	1						PS1/2
15	37720-4431-0	LEVER, FWD SHIFT	1						200G
16	37650-4435-0	PLATE, GUIDE	1						T2.0*92*46
17	84612-4436-0	LEVER, FWD	1						

----> Old replace New <---- New replace Old <-X-> Not interchangeable
<---> Interchangeable <-O-> Interchangeable with another part(s)
* Please place an order assy(*)

https://tractormanualz.com/

L2203-T230A

FRONT DRIVE SHIFT GROUP

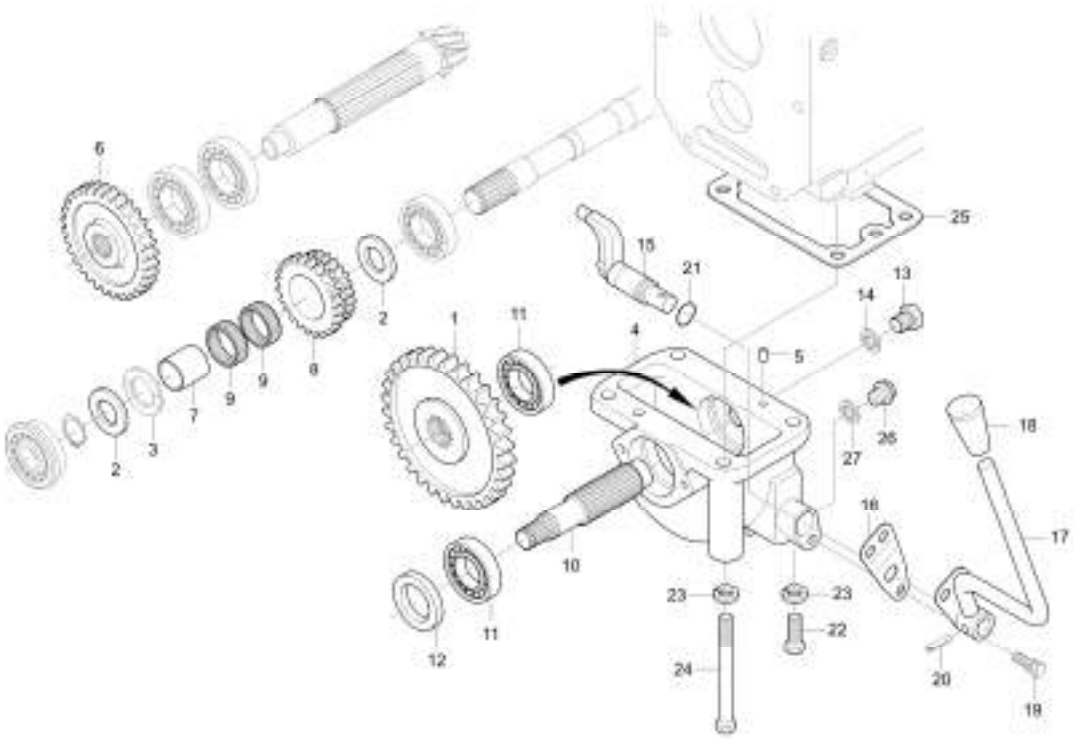

A : LK2554

No.	Part Number	Description	Qty A	Qty B	Qty C	Qty D	Qty E	I.C	Remark
17	T2280-44361	LEVER	1					<------	
18	55611-3146-1	GRIP 2, LEVER	1						
18	55611-3146-2	GRIP 2, LEVER	1					<----->	
19	01123-50816	Hex Head Cap Screw	1						M8XP1.25
20	05411-00625	PIN, SPRING	1						DIA6.4XL25
21	04811-00150	O RING	1						DIA14.8
22	01173-51235	BOLT	2						M12P1.25*35
22	01133-51235	WASHER BOLT	2					<------	M12XP1.25
23	04512-50120	SPRING_WASHER v	2						M12
24	01173-51203	OB-BOLT	2						
25	37650-2128-2	PACKING	1						T0.5
26	06331-35012	PLUG v	1						M12*P1.25
27	04717-01200	WASHER, SEAL	1						

----> Old replace New
<---- New replace Old
<-X-> Not interchangeable
<---> Interchangeable
<-O-> Interchangeable with another part(s)
* Please place an order assy(*)

https://tractormanualz.com/

L2203-T240A

FUEL TANK GROUP

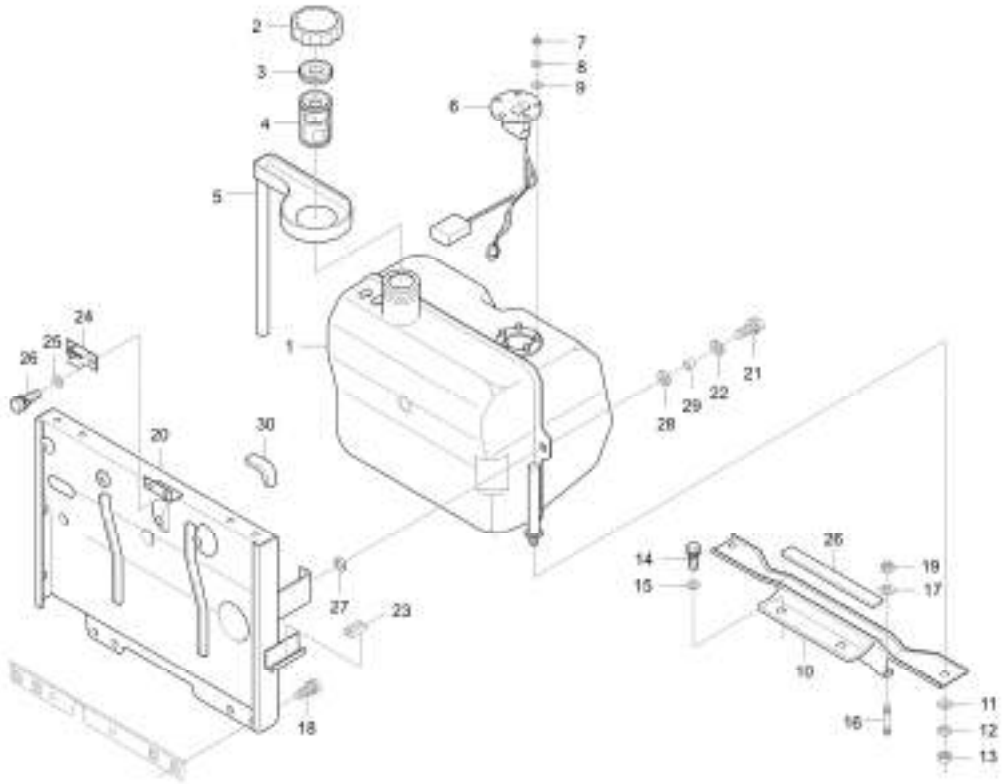

A : LK2554

No.	Part Number	Description	Qty A	Qty B	Qty C	Qty D	Qty E	I.C	Remark
1	T2540-35101	TANK, FUEL obs v	1						
1	T2540-35102	TANK,FUEL v	1 023000001 ~					<----->	
1	T2540-35103	FUEL,TANK obs v	1 123000001 ~					<----->	
2	T2540-54821	ASS'Y, FUEL CAP v	1						
3	T2540-41342	PACKING	1						
4	T2540-41351	ASS'Y FILTER,FUEL	1						
4	T4682-41351	NET, FUEL FILTER v	1					<------	
5	T2540-35311	DISH,FUEL RECEIVE	1						
6	T2540-35212	ASS'Y UNIT, FUEL v	1						
7	02054-50040	NUT	5						M4XP0.7
8	04512-50040	WASHER, SPRING	5						M04
9	04012-50040	WASHER, PLAIN	5						
10	T2540-35282	SUPPORT,FUEL TANK	1						
11	04013-50100	PLAIN_WASHER	2						M10
12	04512-50100	WASHER, SPRING v	2						M10
13	02118-50100	NUT	2						M10*P1.25
14	01123-50820	BOLT, WASHER v	2						M8XP1.25
15	04013-50080	WASHER	2 123000001 ~						

----> Old replace New
<---> Interchangeable
* Please place an order assy(*)
<---- New replace Old
<-O-> Interchangeable with another part(s)
<-X-> Not interchangeable

https://tractormanualz.com/

L2203-T240A

FUEL TANK GROUP

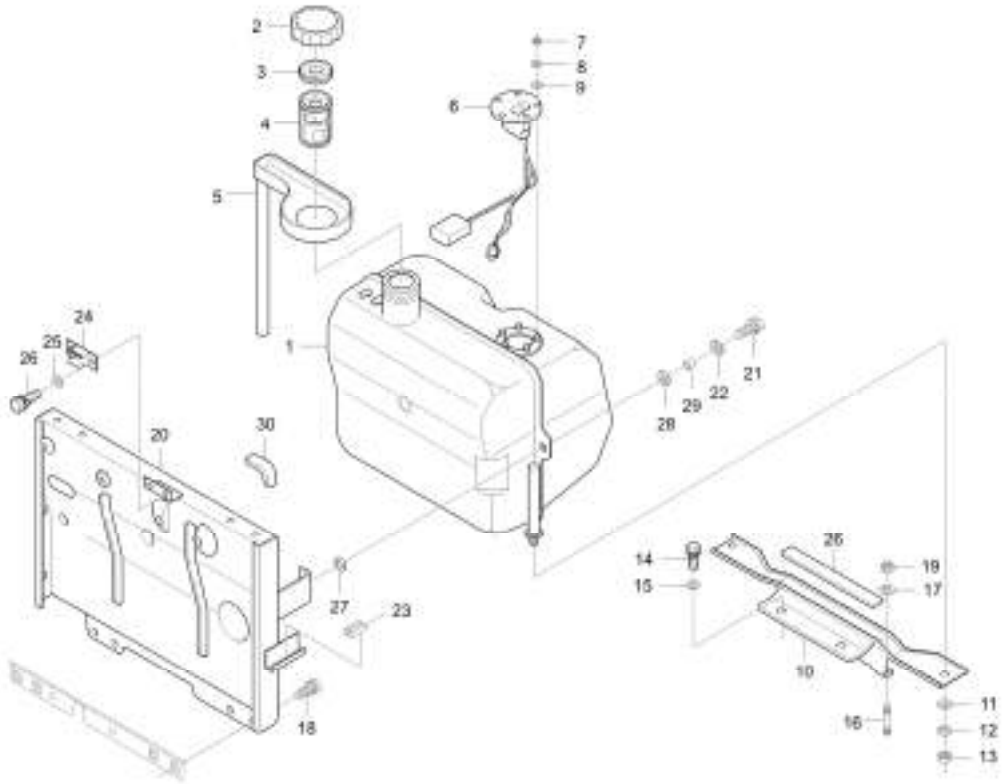

A : LK2554

No.	Part Number	Description	Qty A	Qty B	Qty C	Qty D	Qty E	I.C	Remark
15	04015-50080	WASHER, PLAIN	2					<------	M8
16	01513-50822	STUD	2 323000001 ~						M8XP1.25
16	01513-50820	STUD	2					<------	M8XP1.25
17	04512-50080	SPRING WASHER	2						M08
18	01120-50818	BOLT	4						M8P1.25*18
19	02114-50080	NUT v	2						M8*P1.25
20	T2540-18061	PLATE SHUTTER	1						
20	T2540-18062	FLATE,SHVTTER	1					<------	
20	T2540-18062GY	FLATE,SHVTTER v	1					<------	
21	01123-50832	BOLT, WASHER	2						HEX12*43
21	01125-50832	BOLT	2					<------	
22	04013-50080	WASHER	2						
23	T2305-18271	CUSHION	2						
24	T2540-18271	CLIP	1						T1.2
25	04013-50060	WASHER, PLAIN	2						M6
26	01023-50614	BOLT, WASHER	2						M6P1.0
27	T2540-33231	CUSHION (use T2610-50271) v	1						T5.0
27	T2610-50271	RUBBER, CUSHION v	1 023000001 ~					<------	

----> Old replace New <---- New replace Old <-X-> Not interchangeable
<---> Interchangeable <-O-> Interchangeable with another part(s)
* Please place an order assy(*)

https://tractormanualz.com/

L2203-T240A

FUEL TANK GROUP

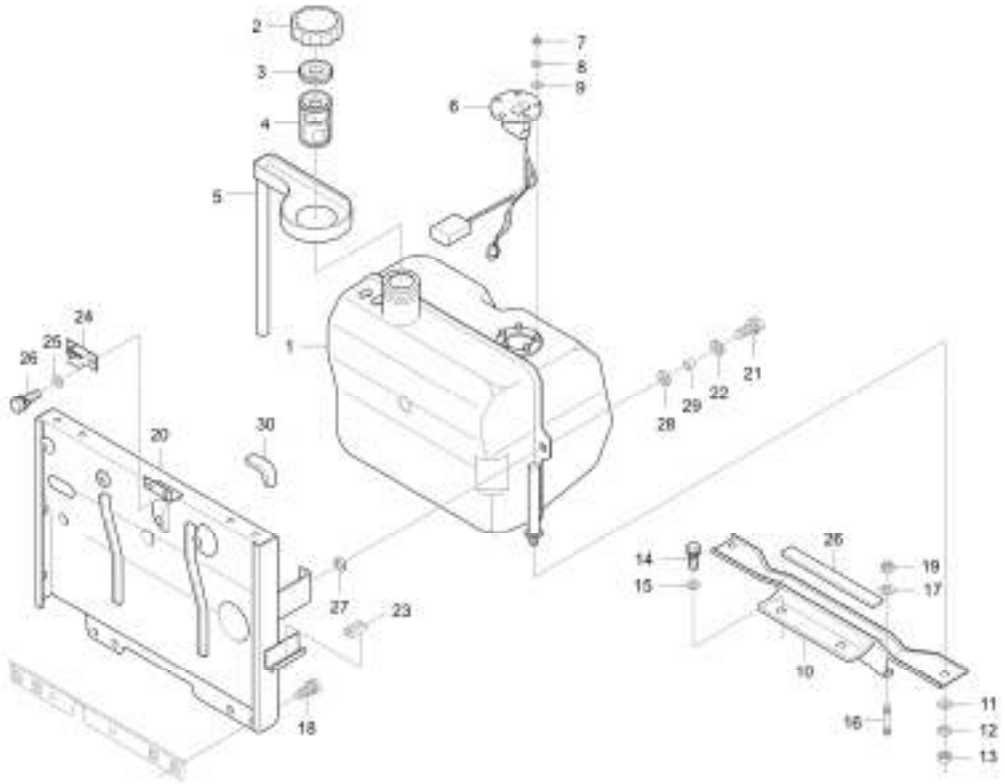

A : LK2554

No.	Part Number	Description	Qty A	Qty B	Qty C	Qty D	Qty E	I.C	Remark
28	37300-3512-1	CUSHION, FUEL TANK	4						
29	37300-35141	SPACER	2						OD13.8*T2.3
30	T2540-83491	CUSHION	2						
30	T2540-83492	CUSHION	2					<------	

----> Old replace New
<---> Interchangeable
* Please place an order assy(*)
<---- New replace Old
<-O-> Interchangeable with another part(s)
<-X-> Not interchangeable

https://tractormanualz.com/

L2203-T250A

OIL FILTER GROUP

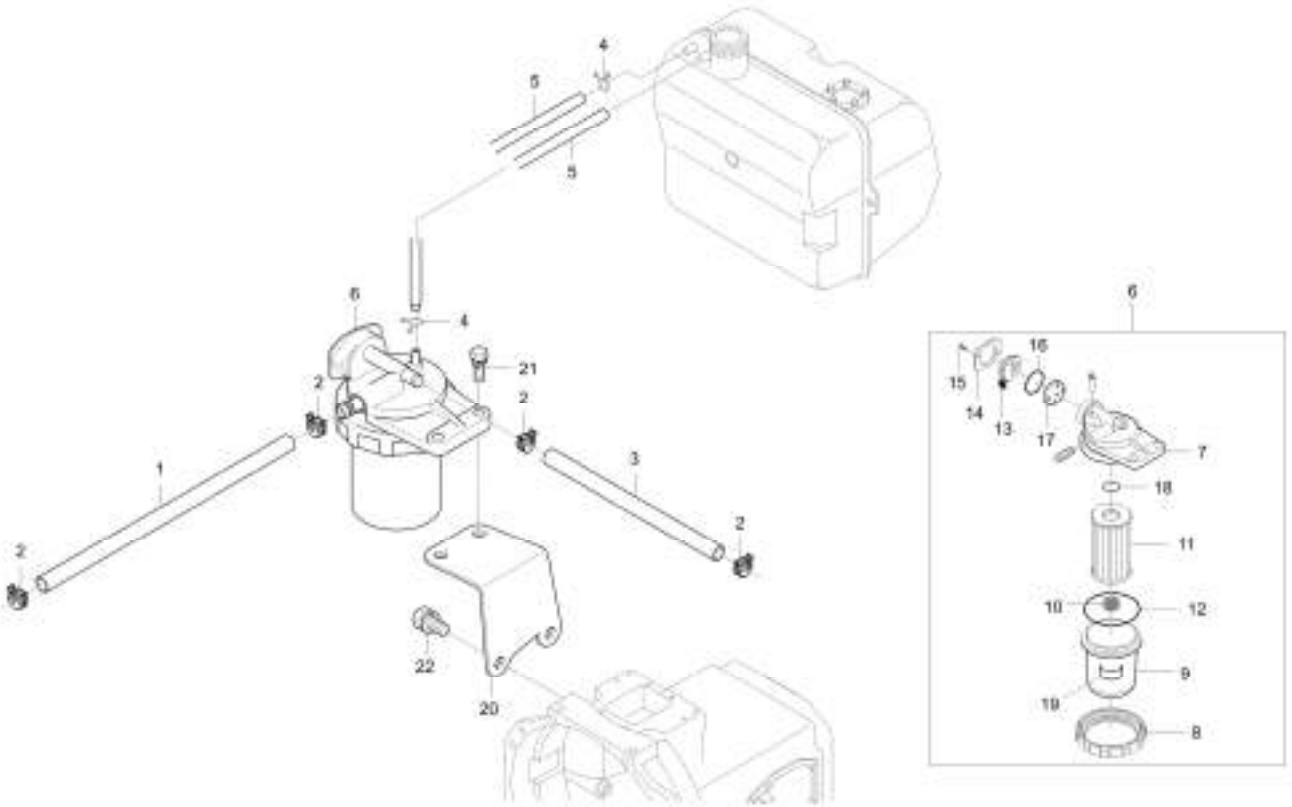

A : LK2554

No.	Part Number	Description	Qty A	Qty B	Qty C	Qty D	Qty E	I.C	Remark
1	T2540-35521	HOSE 2, FUEL	1						DIA14*T2.5
2	14911-4275-1	CLIP, TUBE	4						T0.8*#12
3	15471-4211-1	TUBE, FUEL obs v	1						
4	14971-4275-1	CLAMP, HOSE	4						DIA1.0*ID7.8
5	84612-3561-0	TUBE 5, FUEL	2						DIA8*T2*570
6	84612-4301-0	FUEL FILTER assy	1						
6	T4240-35012	ASSY,FUEL FILTER v	1					<----->	
6	T4240-35013	ASSY,FUEL FILTER v	1					<----->	
6	T4240-35014	ASS'Y,FUEL FILTER v	1 923000001 ~					<----->	
6	T4240-35015	FUEL FILTER ASSY dnr v	1 D23000001 ~					<----->	
6	T4240-35016	ASSY FILTER,FUEL v	1					<----->	
7	84612-4312-0	BODY,FUEL FILTER	1						
7	T4240-35022	BODY,FUEL FILTER v	1					<----->	
7	T4240-35023	BODY, FUEL FILTER	1					<------	
8	84612-4315-0	NUT, STOPPER	1						
9	84612-4313-0	USE T4240-43134 FILTER POT	1						
9	T4240-43132	USE T4240-43134 FILTER POT	1					<----->	
9	T4240-43133	POT, FILTER	1					<----->	

----> Old replace New
<---- New replace Old
<-X-> Not interchangeable
<---> Interchangeable
<-O-> Interchangeable with another part(s)
* Please place an order assy(*)

https://tractormanualz.com/

L2203-T250A

OIL FILTER GROUP

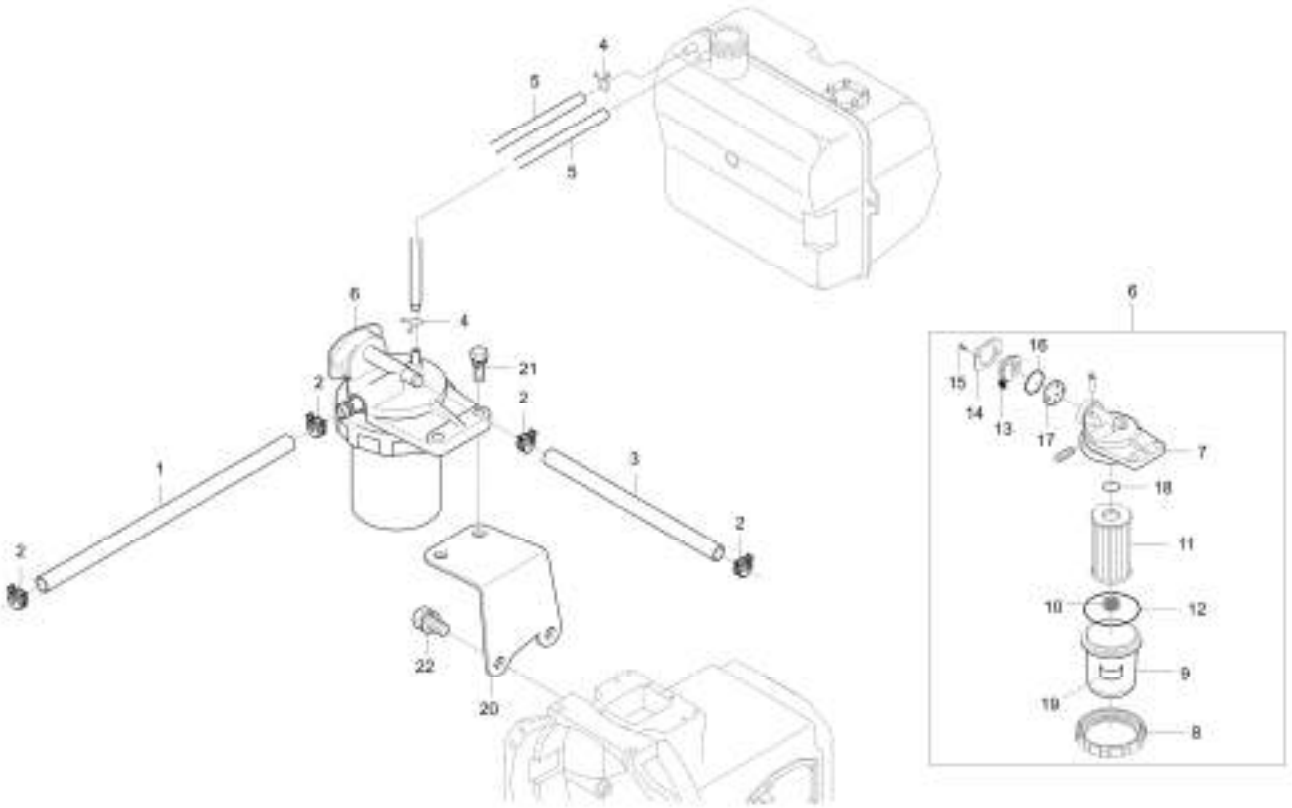

A : LK2554

No.	Part Number	Description	Qty A	Qty B	Qty C	Qty D	Qty E	I.C	Remark
10	84612-4393-0	SPRING v	1						DIA1.2
11	84612-4316-0	ELEMENT, FUEL FILTER	1						
12	04811-50650	O RING	1						
13	84612-4352-0	GRIP, FILTER	1						
13	T4240-35082	FILTER GRIP v	1					<----->	
13	T4240-35083	FILTER GRIP	1					<------	
14	84612-4355-0	SUPPORT, HANDLE	1						T1.8
14	T4240-35092	SUPPORT,HANDLE	1					<----->	
15	84612-4319-0	SCREW	1						
16	04811-10290	O RING	1						
17	84612-4367-0	GASKET	1						
17	T2240-35342	GASKET v	1					<------	
18	04811-00160	O RING obs v	1						DIA15.8
19	T4240-35101	LABEL(FULL FILTER)	1						
20	84612-3581-4	BRACKET,FILTER	1						
20	T2240-35812	BRACKET,FILTER	1					<------	
21	01123-50822	BOLT, WASHER	2						M8XP1.25
22	01123-50816	Hex Head Cap Screw	2						M8XP1.25

----> Old replace New <---- New replace Old <-X-> Not interchangeable
<---> Interchangeable <-O-> Interchangeable with another part(s)
* Please place an order assy(*)

https://tractormanualz.com/

L2203-T260A

HAND SPEED GOVERNOR GROUP

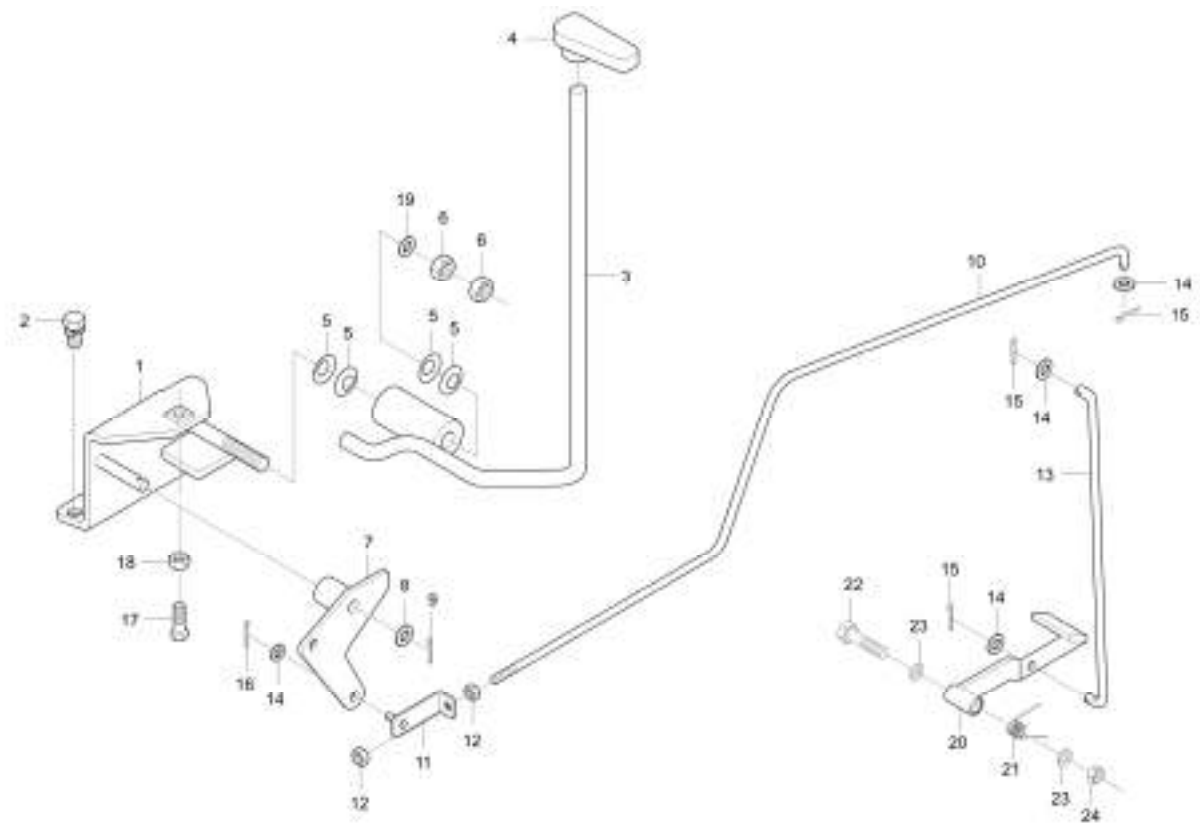

A : LK2554

No.	Part Number	Description	Qty A	Qty B	Qty C	Qty D	Qty E	I.C	Remark
1	T2540-17631	SUPPORT,THROTTLE LEVER	1						
1	T2540-17632	SUPPORT,THROTTLE LEVER obs v	1					<------	
1	T2540-17633	SUPPORT,THROTTLE LEVER	1 123000001 ~					<------	
2	01123-50820	BOLT, WASHER v	2						M8XP1.25
2	01123-50816	Hex Head Cap Screw	2					<----->	M8XP1.25
3	T2540-17121	LEVER,HAND THROTTLE v	1						
3	T2540-17122	LEVER,HAND THROTTLE	1					<------	
3	T2540-17123	LEVER, HAND THROTTLE v	1 223000001 ~					<------	
3	T2540-17124	LEVER, HAND v	1					<------	
4	35320-1717-3	GRIP, LEVER	1						
5	34260-1719-1	SPRING	4						T0.8*30*30
5	T4835-17241	SPRING	3 123000001 ~					<------	
6	02118-50100	NUT	2						M10*P1.25
6	02172-50120	NUT	2 123000001 ~					<------	
7	T2540-17322	LINK,ACCELATOR	1						
8	04013-50080	WASHER	1						
9	05511-50212	PIN,SPLIT	1						DIA2*12
10	T2540-17361	ROD,THROTTLE	1						DIA6

----> Old replace New <---- New replace Old <-X-> Not interchangeable
<---> Interchangeable <-O-> Interchangeable with another part(s)
* Please place an order assy(*)

https://tractormanualz.com/

L2203-T260A

HAND SPEED GOVERNOR GROUP

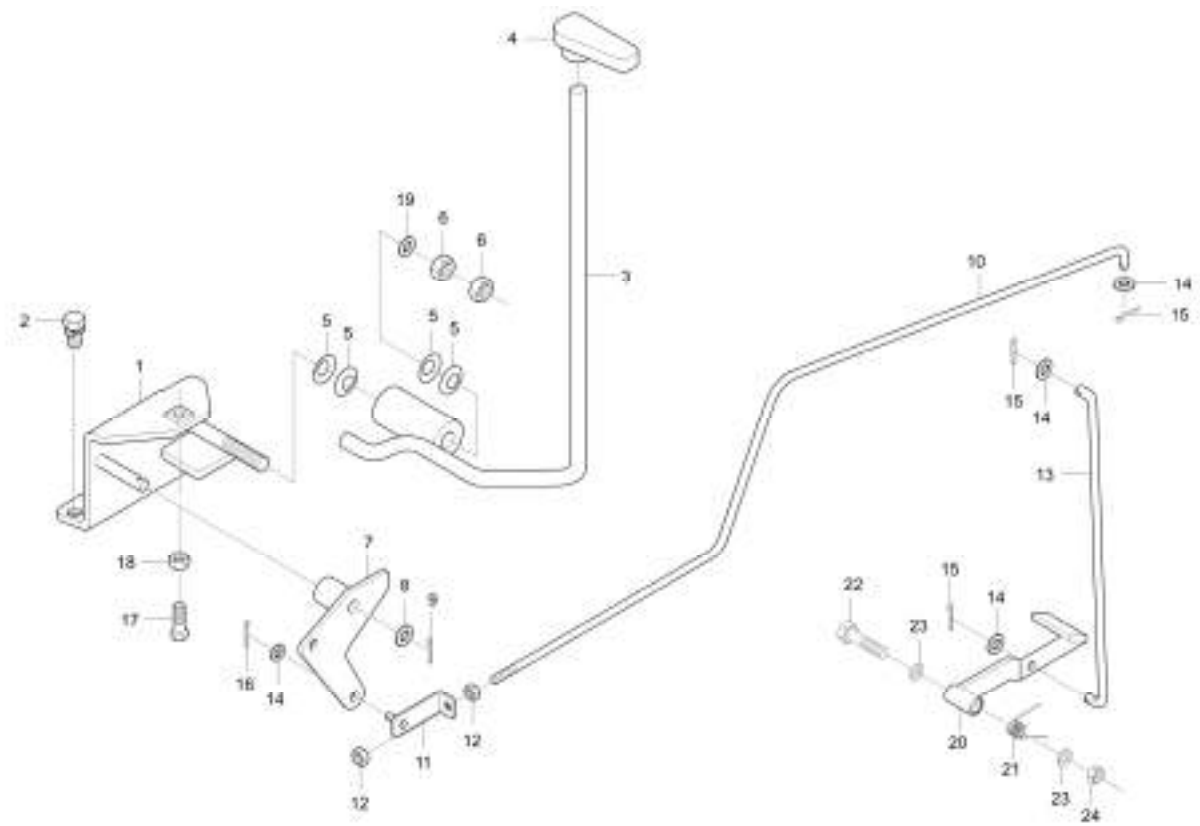

A : LK2554

No.	Part Number	Description	Qty A	Qty B	Qty C	Qty D	Qty E	I.C	Remark
11	34150-1739-2	JOINT, ROD	1						T3.2
12	02012-50060	NUT	2						
13	T2280-17572	ROD, THROTTLE	1						DIA6
13	T2280-17573	ROD,THROTTLE	1					<----->	
14	04013-50060	WASHER, PLAIN	4						M6
15	05511-50212	PIN,SPLIT	3						DIA2*12
16	05511-51612	PIN, SPLIT	1						
17	01153-50835	BOLT	1						M8*P1.25
18	02112-50080	NUT	1						M8*P1.25
18	02114-50080	NUT v	1					<----->	M8*P1.25
19	04011-50120	WASHER, PLAIN	2						M12
20	T2280-17521	PEDAL ACCELERATOR	1						
20	T2280-17522	PEDAI THPOTTLE	1					<------	
21	T2280-17531	SPRING	1						DIA3.5
22	01173-51260	BOLT	1						M12*1.25*60
23	04013-50120	PLAIN_WASHER	2						M12
24	02176-50120	NUT	1						M12XP1.25

----> Old replace New
<---- New replace Old
<-X-> Not interchangeable
<---> Interchangeable
<-O-> Interchangeable with another part(s)
* Please place an order assy(*)

https://tractormanualz.com/

T220F-T310A

POSITION CONTROL LEVER GROUP

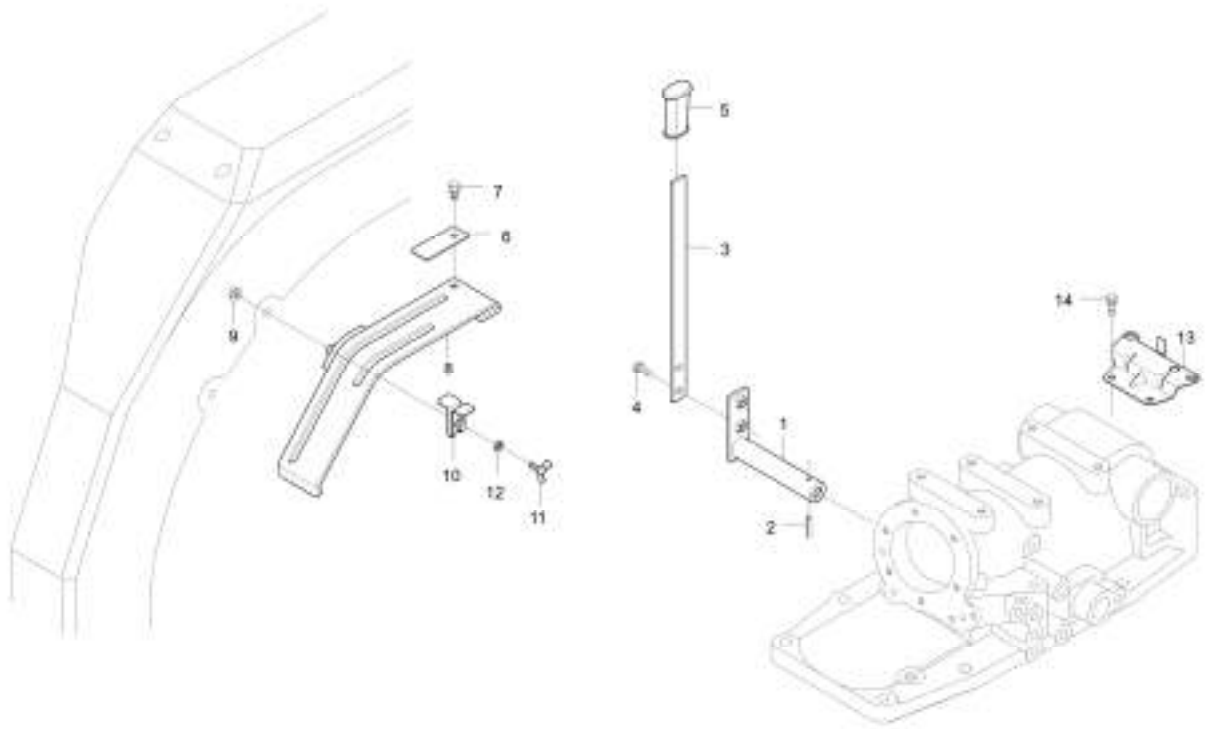

A : LK2554

No.	Part Number	Description	Qty A	Qty B	Qty C	Qty D	Qty E	I.C	Remark
1	T2242-36851	LEVER,POSITION CONTROL	1						
1	T2242-36852	LEVER 1, POSITION CONTROL	1					<----->	
2	05411-00525	PIN,SPRING	1						DIA5.4XL25
3	T2440-36862	LEVER,POSITION CONTROL 2 v	1						T3.2
4	01023-50616	BOLT, WASHER	2						M6XP1.0
5	34350-3689-2	GRIP	1						
6	T2440-36932	STOPPER 1	1						T2.0
7	01123-50816	Hex Head Cap Screw	1						M8XP1.25
8	T2280-36811OE	GUIDE, LEVER	1						
9	02751-50080	FLANGE NUT 8MMX1.25P	3						M8XP1.25
10	T2440-36912	STOPPER 2 v	1						
11	01811-50815	BOLT,WING	1						M8XP1.25
12	04013-50080	WASHER	1						
13	T2280-90402	BRACKET, SOCKET	1						
14	01133-51220	BOLT, WASHER	2						M12*P1.25

----> Old replace New
<---- New replace Old
<-X-> Not interchangeable
<---> Interchangeable
<-O-> Interchangeable with another part(s)
* Please place an order assy(*)

https://tractormanualz.com/

L2203-T340A

THREE POINT LINKAGE GROUP

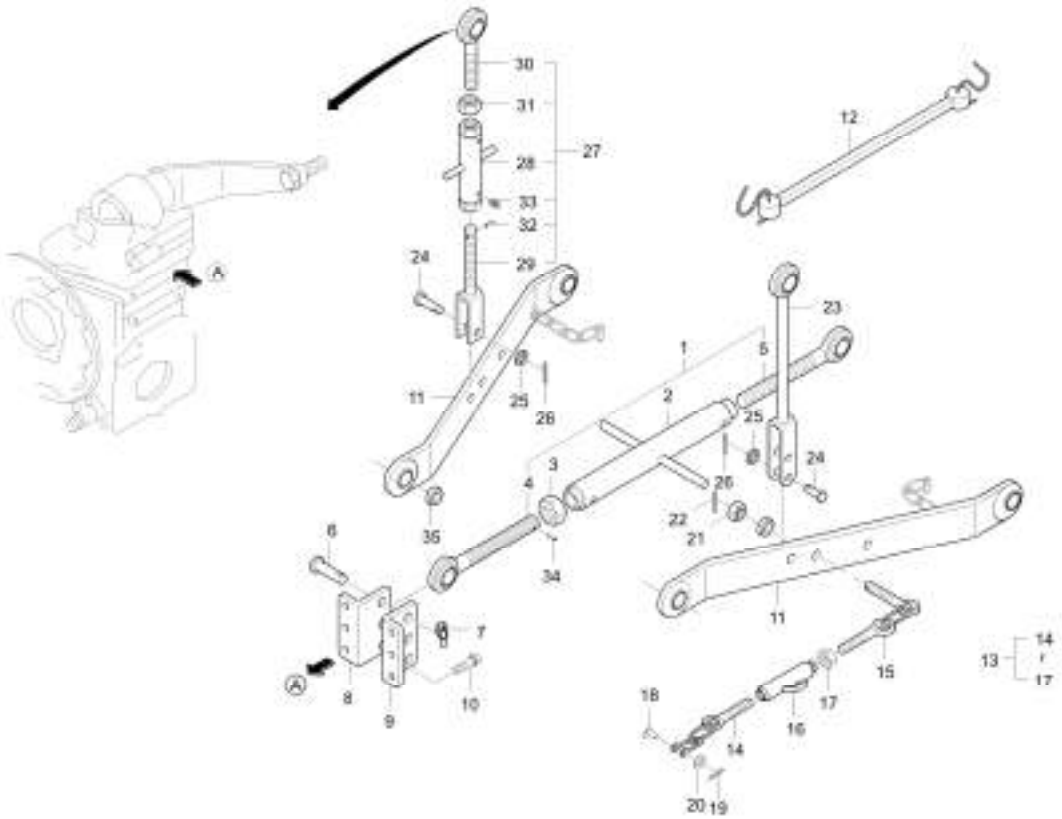

A : LK2554

No.	Part Number	Description	Qty A	Qty B	Qty C	Qty D	Qty E	I.C	Remark
1	99471-2210-3	TOP LINK ASSY	1						
2	32240-7111-3	LINK, TOP	1						
3	32244-7118-1	NUT, TOP LINK	1						M24P3.0
4	32240-7121-4	TOP LINK JOINT, RH	1						
5	32240-7122-4	USE 32240-71224	1						
6	31150-7136-5	PIN TOP LINK	1						DIA19
7	34150-3764-4	PIN,CLIP	3						DIA10.0
8	99571-2214-4	HOLDER, TOP LINK RH	1						T9*185*110
8	T2240-71042	HOLDER, TOP LINK(RH)	1					<----->	T9*185*110
8	T2240-71043	HOLDER, TOP LINK (RH)	1					<----->	T9*185*110
9	99571-2215-4	HOLDER, TOP LINK LH	1						T9*185*110
9	T2240-71062	HOLDER TOP LINK(LH)	1					<----->	T9*185*110
9	T2240-71063	HOLDER TOP LINK(LH)	1					<----->	T9*185*110
10	01133-51230	BOLT, WASHER	6						M12XP1.25
11	84612-2131-2	LWR LINK ASSY	2						
11	84612-2131-3	LWR LINK ASSY	2 123000001 ~					<------	
12	T2610-21321	CHECK LINK ASSY	1						
13	35110-7180-0	ASSY CHAIN, CHECK	2						

----> Old replace New
<---- New replace Old
<-X-> Not interchangeable
<---> Interchangeable
<-O-> Interchangeable with another part(s)
* Please place an order assy(*)

https://tractormanualz.com/

L2203-T340A

THREE POINT LINKAGE GROUP

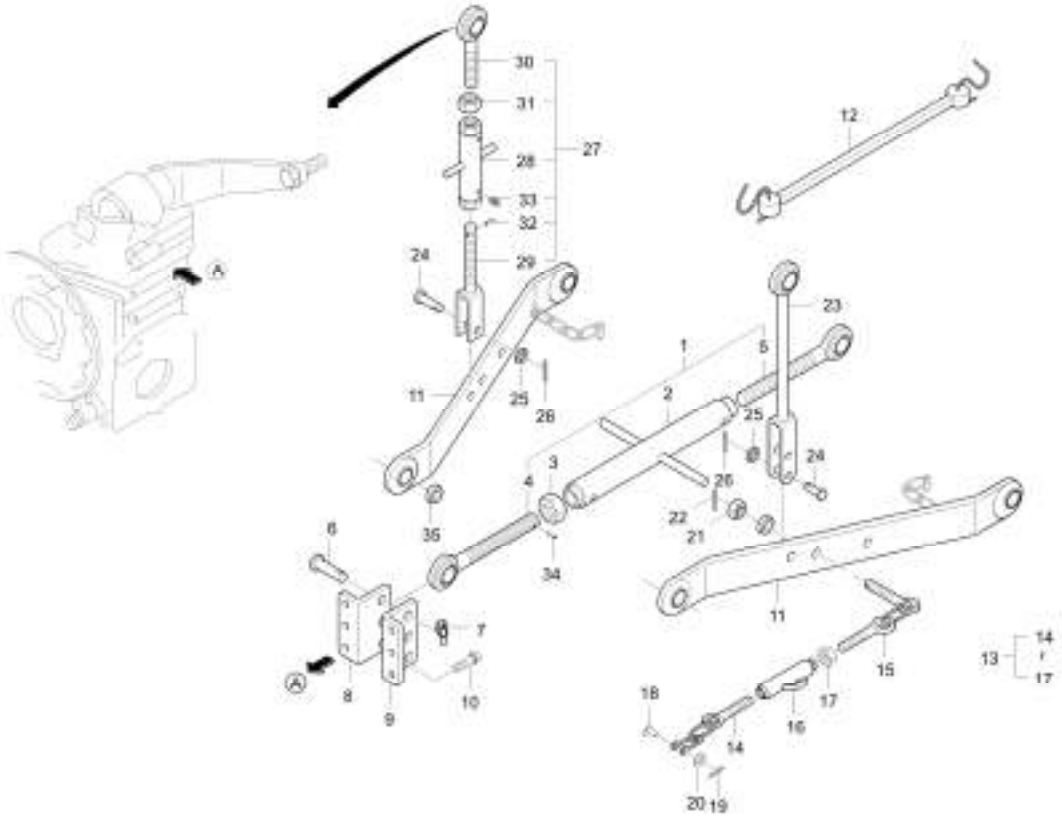

A : LK2554

No.	Part Number	Description	Qty A	Qty B	Qty C	Qty D	Qty E	I.C	Remark
13	35110-7180-1	CHECK CHAIN ASSY	2					<------	
14	35110-7181-1	CHAIN, CHECK FR	2						
15	35110-7182-1	CHAIN, CHECK RR	2						
16	99571-2284-1	BUCKLE, TURN	2						
17	02052-50140	NUT	2						M14*2.0
18	99571-2282-3	PIN	2						
19	05515-51600	PIN, SNAP	2						DIA16
20	04013-50100	PLAIN_WASHER	2						M10
21	02374-50140	NUT	2						M14*1.5
22	05511-50335	PIN, SPLIT	2						DIA3*35
23	35110-7154-2	LIFT ROD ASSY, LH	1						
23	T2240-71542	ASSY ROD,LIFT (LH) v	1 423000001 ~					<----->	
24	05122-51450	PIN, JOINT	2						
25	04013-50140	WASHER, PLAIN	2						M14
26	05511-50425	PIN, SPLIT	2						DIA4*25
27	35110-7151-2	LIFT ROD ASSY, RH	1						
28	35110-7153-1	ROD, LIFT MID	1						
29	35110-7152-4	ROD, LIFT LWR	1						

----> Old replace New
<---- New replace Old
<-X-> Not interchangeable
<---> Interchangeable
<-O-> Interchangeable with another part(s)
* Please place an order assy(*)

https://tractormanualz.com/

L2203-T340A

THREE POINT LINKAGE GROUP

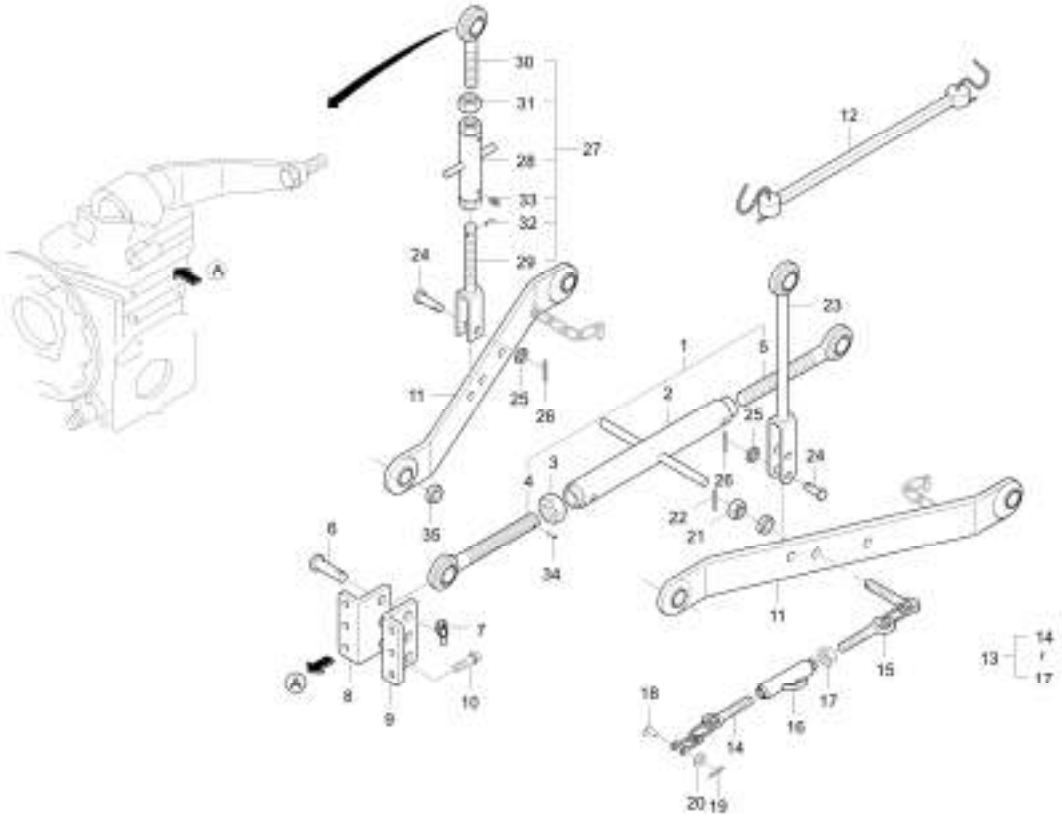

A : LK2554

No.	Part Number	Description	Qty A	Qty B	Qty C	Qty D	Qty E	I.C	Remark
30	35110-7155-1	LIFT ROD ASSY, UP	1						
31	35110-7157-1	NUT	1						HEX30*17
32	05411-50422	PIN,SPRING	1						DIA4*22
33	06611-15675	NIPPLE, GREASE v	1						A-M6F
34	05411-50425	PIN,SPRING	2						DIA4*25
35	T2440-71832	COLLAR v	2						DIA48*11

----> Old replace New
<---- New replace Old
<-X-> Not interchangeable
<---> Interchangeable
<-O-> Interchangeable with another part(s)
* Please place an order assy(*)

https://tractormanualz.com/

L2203-T480A

FRONT WHEEL GROUP

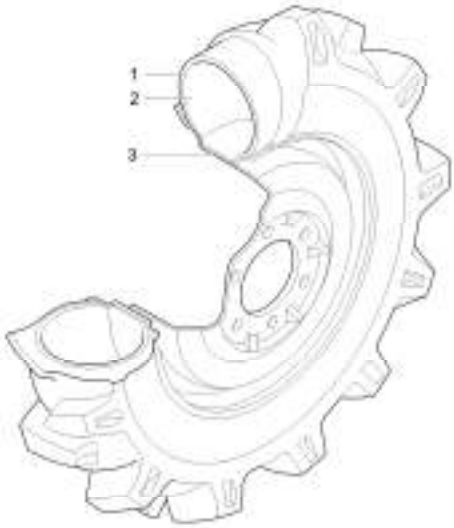

A : LK2554

No.	Part Number	Description	Qty A	Qty B	Qty C	Qty D	Qty E	I.C	Remark
1	37650-4375-0	TIRE, 6X14 4L	1						6-14,4PR
2	37650-4376-0	TUBE, 6X14	1						6-14
3	T2261-43733	WHEEL,FRONT v	1						5JA*14

----> Old replace New
<---- New replace Old
<-X-> Not interchangeable
<---> Interchangeable
<-O-> Interchangeable with another part(s)
* Please place an order assy(*)

https://tractormanualz.com/

L2203-T490A

REAR WHEEL GROUP

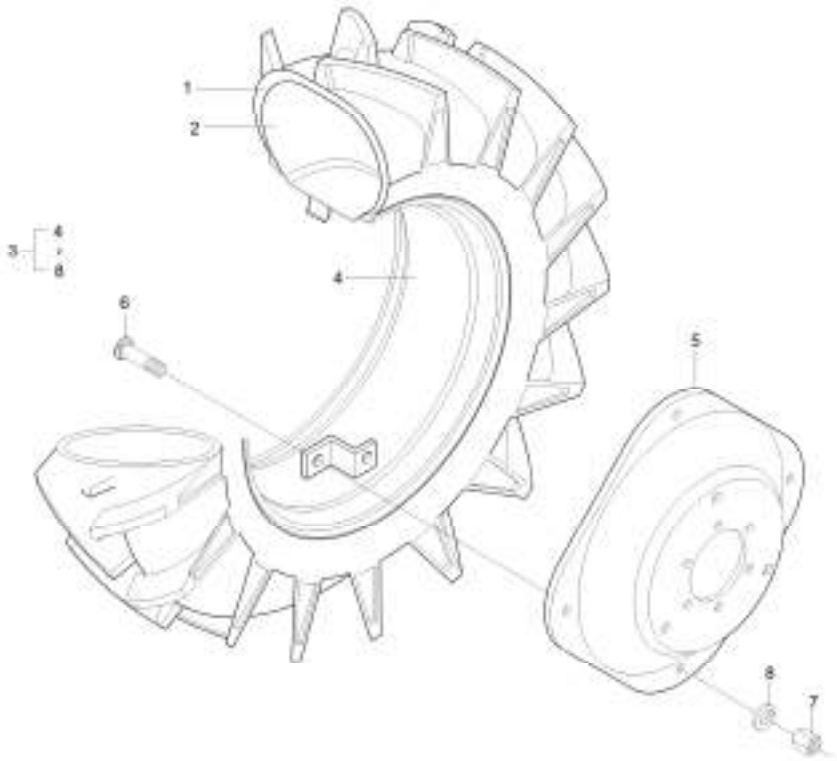

A : LK2554

No.	Part Number	Description	Qty A	Qty B	Qty C	Qty D	Qty E	I.C	Remark
1	T2280-27621	TIRE 9.5-24	1						9.5-24.4FM2
2	T2280-27631	TUBE 9.5-24	1						9.5-24
3	T2261-27721	REAR WHEEL ASSY	1						
4	84612-2765-0	WHEEL, REAR	1						W8-24
5	T4240-27672	DISK	1						T8.0
6	T4240-27682	BOLT, DISK v	4						M16P1.5*40
7	T4260-27691	NUT, LOCK	4						
8	04512-50160	SPRING_WASHER	8						M16

----> Old replace New
<---> Interchangeable
* Please place an order assy(*)
<---- New replace Old
<-O-> Interchangeable with another part(s)
<-X-> Not interchangeable

https://tractormanualz.com/

L2203-T500A

WEIGHT GROUP

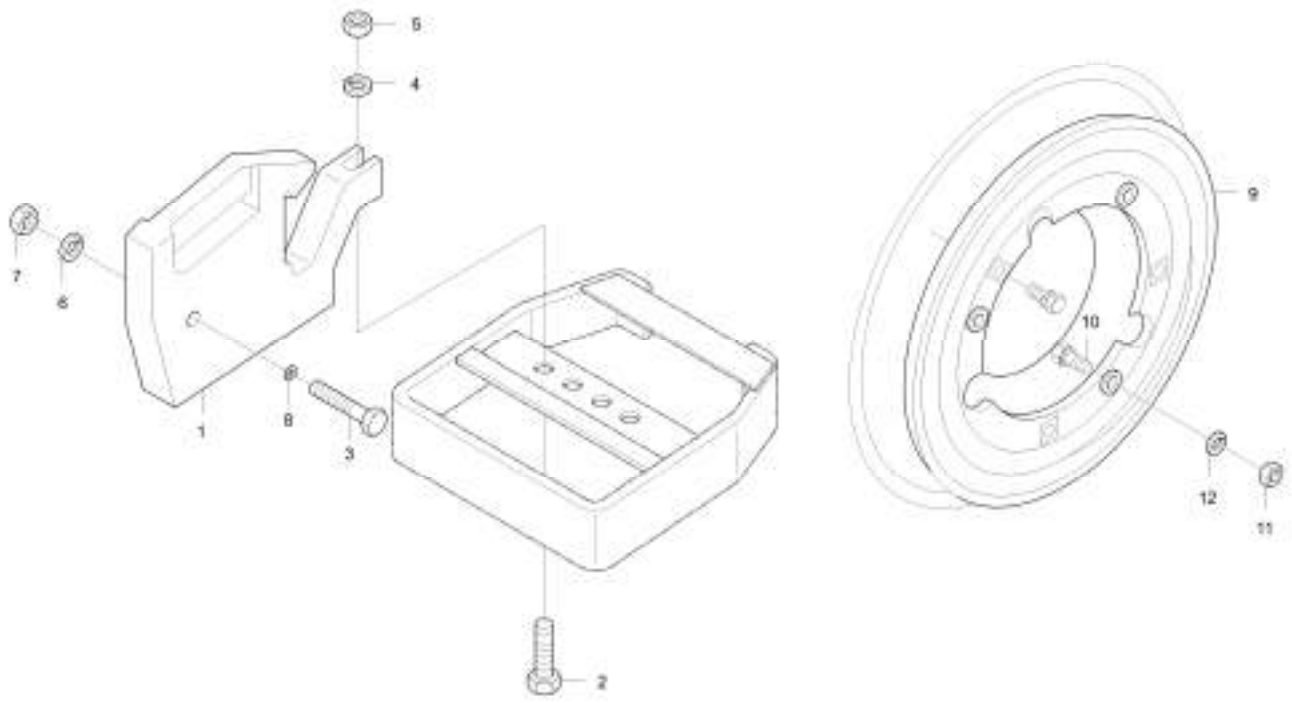

A : LK2554

No.	Part Number	Description	Qty A	Qty B	Qty C	Qty D	Qty E	I.C	Remark
1	T2540-54601	WEIGHT, BALANCE	4						20KG
2	01073-51460	BOLT	4						
3	85726-5463-1	BOLT, WEIGHT	1						M12*1.25
4	04512-50140	SPRING_WASHER	4						M14
5	02176-50140	NUT	4						M14XP1.5
6	04512-50120	SPRING_WASHER v	1						M12
7	02076-50120	NUT v	1						
8	04011-50120	WASHER, PLAIN	2						M12
9	T4240-27742	WEIGHT	2						
9	T4240-27743	WEIGHT	2					<------	
10	99415-1503-1	BOLT, WEIGHT	6						
11	02076-50160	NUT	6						
12	04512-50160	SPRING_WASHER	6						M16

----> Old replace New
<---> Interchangeable
* Please place an order assy(*)
<---- New replace Old
<-O-> Interchangeable with another part(s)
<-X-> Not interchangeable

https://tractormanualz.com/

INDEX 1

https://tractormanualz.com/

PART NO.	PAGE	PART NO.	PAGE	PART NO.	PAGE	PART NO.	PAGE	PART NO.	PAGE
01023-50612	40	01123-50822	86	01133-51235	130	01513-50828	68	02114-50080	115
01023-50614	16	01123-50822	96	01133-51235	133	01517-51028	24	02114-50080	116
01023-50614	125	01123-50822	96	01133-51240	23	01517-51632	71	02114-50080	120
01023-50614	135	01123-50822	138	01133-51240	92	01518-50622	33	02114-50080	125
01023-50616	108	01123-50825	12	01133-51250	130	01518-50822	37	02114-50080	135
01023-50616	108	01123-50825	12	01133-51280	70	01574-51225	74	02114-50080	140
01023-50616	119	01123-50825	44	01153-50820	119	01574-51225	76	02118-50100	134
01023-50616	141	01123-50828	37	01153-50822	80	01574-51232	122	02118-50100	139
01023-50618	37	01123-50830	38	01153-50835	140	01574-51235	92	02156-50080	5
01023-50620	7	01123-50830	124	01153-50845	50	01654-50820	3	02156-50080	12
01023-50620	31	01123-50832	29	01153-50855	50	01654-50820	19	02156-50080	13
01023-50620	33	01123-50832	38	01153-50870	69	01654-50830	8	02156-50080	24
01023-50628	29	01123-50832	45	01153-51270	88	01674-51032	3	02156-50080	27
01023-50650	2	01123-50832	66	01155-50860	125	01674-51032	23	02156-50080	34
01025-50638	91	01123-50832	135	01173-51000	38	01674-51032	24	02156-50080	37
01025-50650	90	01123-50835	34	01173-51005	38	01754-50612	39	02156-50080	113
01050-50628	13	01123-50845	50	01173-51030	82	01754-50616	31	02172-50120	139
01053-50610	38	01123-50845	96	01173-51030	130	01754-50616	109	02172-50140	95
01073-51460	147	01123-50850	94	01173-51050	49	01754-50616	109	02172-50160	47
01120-50814	120	01123-50850	98	01173-51070	49	01754-50620	31	02172-50160	87
01120-50814	120	01123-50855	50	01173-51090	102	01754-50812	122	02172-50160	88
01120-50818	135	01123-50860	6	01173-51200	92	01754-50820	19	02174-50120	76
01120-50820	109	01123-50860	99	01173-51203	133	01754-50830	124	02174-50120	102
01123-50812	83	01123-50865	94	01173-51220	52	01774-51260	124	02174-50120	114
01123-50814	28	01123-50870	6	01173-51225	74	01811-50612	40	02174-50140	42
01123-50814	76	01123-50870	34	01173-51228	52	01811-50612	118	02174-50140	113
01123-50816	5	01123-50875	99	01173-51235	82	01811-50815	141	02174-50140	122
01123-50816	23	01123-50880	6	01173-51235	130	02012-50060	140	02176-50100	24
01123-50816	41	01123-50885	6	01173-51235	133	02014-50060	13	02176-50100	38
01123-50816	44	01123-50895	6	01173-51250	130	02014-50060	104	02176-50100	49
01123-50816	50	01125-50832	135	01173-51260	140	02014-50060	105	02176-50100	89
01123-50816	54	01125-50850	90	01173-51275	101	02014-50100	105	02176-50120	43
01123-50816	56	01133-51018	100	01173-51295	92	02052-50140	143	02176-50120	70
01123-50816	59	01133-51018	112	01173-51400	75	02054-50040	134	02176-50120	74
01123-50816	68	01133-51020	124	01173-51425	52	02054-50050	39	02176-50120	88
01123-50816	94	01133-51022	46	01173-51430	52	02054-50050	106	02176-50120	92
01123-50816	100	01133-51028	77	01173-51435	47	02054-50050	107	02176-50120	101
01123-50816	119	01133-51028	86	01173-51435	77	02056-50060	7	02176-50120	122
01123-50816	120	01133-51028	102	01173-51435	84	02056-50060	28	02176-50120	140
01123-50816	133	01133-51030	24	01173-51450	78	02056-50060	33	02176-50140	75
01123-50816	138	01133-51030	59	01173-51635	72	02056-50060	33	02176-50140	78
01123-50816	139	01133-51030	82	01202-50612	13	02076-50120	147	02176-50140	95
01123-50816	141	01133-51030	104	01202-50614	118	02076-50140	37	02176-50140	113
01123-50818	18	01133-51030	130	01202-50820	41	02076-50160	71	02176-50140	147
01123-50818	46	01133-51035	54	01513-50616	28	02076-50160	101	02176-50160	84
01123-50820	62	01133-51035	57	01513-50618	28	02076-50160	147	02176-50220	102
01123-50820	116	01133-51035	70	01513-50820	135	02112-50080	32	02372-50200	76
01123-50820	122	01133-51038	93	01513-50822	5	02112-50080	94	02374-50140	143
01123-50820	134	01133-51040	49	01513-50822	10	02112-50080	115	02751-50080	10
01123-50820	139	01133-51220	141	01513-50822	12	02112-50080	140	02751-50080	141
01123-50822	10	01133-51230	70	01513-50822	27	02114-50080	69	02870-50100	11
01123-50822	27	01133-51230	92	01513-50822	34	02114-50080	95	03014-50830	119
01123-50822	34	01133-51230	142	01513-50822	96	02114-50080	95	03017-50625	106
01123-50822	62	01133-51235	82	01513-50822	96	02114-50080	96	03024-50520	26
01123-50822	77	01133-51235	92	01513-50822	135	02114-50080	96	03024-50520	108

https://tractormanualz.com/

PART NO.	PAGE	PART NO.	PAGE	PART NO.	PAGE	PART NO.	PAGE	PART NO.	PAGE
03054-50514	106	04015-50080	135	04512-50140	52	04811-00090	64	05411-00420	30
04011-50120	140	04512-50040	134	04512-50140	75	04811-00090	99	05411-00420	64
04011-50120	147	04512-50050	39	04512-50140	77	04811-00110	94	05411-00420	95
04011-50180	7	04512-50050	107	04512-50140	84	04811-00110	95	05411-00425	65
04011-50200	75	04512-50060	7	04512-50140	147	04811-00120	32	05411-00432	65
04012-50040	134	04512-50060	13	04512-50160	71	04811-00120	66	05411-00525	141
04012-50050	39	04512-50060	28	04512-50160	101	04811-00120	66	05411-00625	133
04012-50050	106	04512-50060	33	04512-50160	146	04811-00140	3	05411-00628	46
04012-50080	93	04512-50060	105	04512-50160	147	04811-00150	6	05411-00628	68
04012-50080	115	04512-50060	118	04512-50220	102	04811-00150	68	05411-00630	60
04012-50100	38	04512-50080	5	04513-50140	123	04811-00150	133	05411-00840	112
04013-50050	106	04512-50080	12	04611-00180	93	04811-00160	138	05411-01040	55
04013-50060	13	04512-50080	12	04611-00420	36	04811-00200	6	05411-01040	61
04013-50060	40	04512-50080	24	04611-00620	62	04811-00200	90	05411-50422	144
04013-50060	108	04512-50080	27	04611-00850	71	04811-00200	90	05411-50425	144
04013-50060	116	04512-50080	34	04612-00140	14	04811-00200	98	05511-50212	139
04013-50060	118	04512-50080	37	04612-00150	36	04811-00220	42	05511-50212	140
04013-50060	118	04512-50080	44	04612-00240	28	04811-00240	79	05511-50218	95
04013-50060	119	04512-50080	50	04612-00250	97	04811-00320	46	05511-50218	116
04013-50060	125	04512-50080	69	04612-00250	112	04811-00360	6	05511-50220	59
04013-50060	135	04512-50080	79	04612-00300	53	04811-00380	46	05511-50220	113
04013-50060	140	04512-50080	95	04612-00300	53	04811-00650	100	05511-50220	114
04013-50080	12	04512-50080	96	04612-00300	56	04811-05220	90	05511-50325	86
04013-50080	32	04512-50080	96	04612-00300	73	04811-10290	138	05511-50325	87
04013-50080	59	04512-50080	113	04612-00300	96	04811-10300	21	05511-50325	88
04013-50080	95	04512-50080	115	04612-00450	42	04811-50300	16	05511-50325	88
04013-50080	107	04512-50080	116	04613-00060	94	04811-50300	49	05511-50335	143
04013-50080	113	04512-50080	125	04714-00120	99	04811-50450	100	05511-50425	114
04013-50080	113	04512-50080	135	04717-00800	50	04811-50500	100	05511-50425	143
04013-50080	114	04512-50100	24	04717-00800	56	04811-50650	44	05511-50430	76
04013-50080	116	04512-50100	38	04717-00800	64	04811-50650	138	05511-51612	140
04013-50080	116	04512-50100	49	04717-00800	68	04811-50700	79	05515-50600	116
04013-50080	120	04512-50100	89	04717-01000	49	04811-50700	92	05515-51000	82
04013-50080	120	04512-50100	102	04717-01000	78	04811-50900	77	05515-51000	130
04013-50080	121	04512-50100	105	04717-01200	3	04811-50900	78	05515-51200	68
04013-50080	121	04512-50100	134	04717-01200	78	04811-50900	92	05515-51600	143
04013-50080	134	04512-50120	43	04717-01200	79	04811-51300	77	05621-10514	119
04013-50080	135	04512-50120	46	04717-01200	84	05012-00408	1	05624-20408	127
04013-50080	139	04512-50120	52	04717-01200	133	05012-00609	1	05624-20408	129
04013-50080	141	04512-50120	52	04717-01600	51	05012-00612	1	05712-00408	32
04013-50100	38	04512-50120	70	04717-01600	70	05012-00612	6	05712-00410	2
04013-50100	134	04512-50120	74	04717-01700	92	05012-01018	1	05712-00525	27
04013-50100	143	04512-50120	76	04717-02150	132	05012-01018	49	05712-00720	18
04013-50120	114	04512-50120	85	04717-02650	48	05012-01018	77	05712-00720	21
04013-50120	122	04512-50120	88	04717-02650	49	05012-01018	102	05712-00720	39
04013-50120	140	04512-50120	92	04724-00120	93	05012-01018	132	05811-00416	37
04013-50140	42	04512-50120	101	04810-00100	91	05012-01025	23	06311-35030	92
04013-50140	122	04512-50120	102	04810-00100	93	05012-01025	70	06311-45030	82
04013-50140	143	04512-50120	122	04810-00100	98	05122-50822	114	06311-55010	49
04014-50100	9	04512-50120	133	04810-00120	95	05122-50828	113	06311-75015	1
04014-50120	76	04512-50120	147	04810-00120	98	05122-50835	59	06311-75045	1
04015-50060	104	04512-50140	37	04810-00140	93	05122-51450	143	06312-10010	90
04015-50060	118	04512-50140	42	04810-00140	94	05411-00316	99	06312-10060	90
04015-50080	38	04512-50140	47	04810-00200	91	05411-00412	100	06331-35010	78
04015-50080	124	04512-50140	52	04810-00200	98	05411-00418	93	06331-35012	78

https://tractormanualz.com/

PART NO.	PAGE	PART NO.	PAGE	PART NO.	PAGE	PART NO.	PAGE	PART NO.	PAGE
06331-35012	79	08511-04030	84	15221-1431-2	14	15381-5203-0	28	15525-7343-1	37
06331-35012	84	08511-04030	84	15221-1435-1	14	15401-1172-1	11	15601-1403-1	14
06331-35012	93	08711-30205	79	15221-1442-1	14	15401-6556-1	26	15601-5412-1	32
06331-35012	133	08711-30305	73	15221-1443-1	14	15401-9201-1	30	15601-5422-1	32
06331-35016	51	08711-30305	79	15221-1511-2	18	15451-9233-2	17	15601-5442-2	32
06331-35016	70	08721-30205	75	15221-1627-3	18	15471-2331-1	21	15601-5602-1	29
06350-00810	50	08721-30206	75	15221-1632-1	28	15471-2411-1	21	15601-5648-1	29
06350-00810	93	08823-03614	132	15221-2133-1	20	15471-4211-1	28	15601-9201-1	32
06350-00810	94	09230-08164	93	15221-2336-1	21	15471-4211-1	137	15601-9665-1	32
06611-15675	75	09500-16287	60	15221-2338-1	21	15471-5605-2	29	17011-5362-1	25
06611-15675	86	09500-35528	80	15221-2401-1	18	15471-5774-1	30	17011-5738-3	33
06611-15675	112	09502-55210	53	15221-2428-1	18	15471-5792-1	30	19202-2325-1	21
06611-15675	114	09661-40300	26	15221-2432-1	18	15471-5798-1	30	19202-2354-1	22
06611-15675	144	10231-7362-1	36	15221-3314-2	16	15521-0454-3	8	19202-3566-1	2
06613-10010	44	14111-4241-4	27	15221-3361-1	1	15521-0468-2	23	23451-00415	102
07715-00805	43	14301-4275-3	28	15221-3365-1	1	15521-0479-2	23	23451-03113	102
07715-01605	64	14412-7311-2	82	15221-3375-2	3	15521-0514-1	16	23641-06501	102
07715-01605	64	14911-4275-1	28	15221-5628-2	6	15521-0537-1	16	31150-1472-7	44
07715-01605	68	14911-4275-1	137	15221-5721-1	33	15521-1182-1	10	31150-1478-4	44
07715-03213	7	14971-4275-1	26	15221-6382-4	23	15521-1235-1	10	31150-7136-5	142
07811-10820	33	14971-4275-1	137	15221-6663-3	16	15521-1423-1	15	31220-1429-3	23
07811-11210	33	15021-1424-1	15	15221-6664-1	16	15521-1452-2	16	31220-1429-3	52
07918-00001	33	15021-3366-1	2	15221-8813-1	7	15521-1651-1	18	31220-2234-0	79
08100-00031	60	15021-3366-1	17	15221-8821-1	7	15521-2131-1	20	31220-2234-2	53
08101-06010	81	15021-3366-1	30	15225-5166-1	30	15521-2214-1	20	31220-2393-2	66
08101-06011	81	15108-5728-4	33	15241-3695-2	7	15521-2353-1	21	31220-2393-2	67
08101-06205	55	15108-7238-1	130	15241-5214-1	28	15521-2436-1	18	31220-2628-1	57
08101-06205	61	15108-7238-2	82	15271-5302-1	25	15521-2437-1	18	31220-2635-9	57
08101-06205	62	15108-7238-2	130	15291-0456-2	8	15521-3229-1	7	31220-2635-9	80
08101-06206	62	15108-7287-3	40	15301-1116-1	11	15521-5425-1	30	31220-2636-7	56
08101-06207	73	15108-7287-3	40	15301-1241-0	12	15521-5426-1	30	31220-2636-7	80
08101-06208	59	15109-7336-4	34	15301-3283-0	5	15521-5427-1	30	31220-2639-2	57
08101-06208	73	15109-7336-4	40	15301-7242-0	41	15521-5641-2	29	31220-2639-2	80
08101-06208	73	15109-7336-4	82	15301-7244-0	41	15521-5642-1	29	31220-2648-3	57
08101-06209	71	15109-7336-4	131	15301-7245-0	41	15521-5711-3	33	31220-2648-3	81
08101-06210	59	15111-7218-1	82	15301-7246-0	40	15521-6604-1	16	31220-2649-3	57
08101-06304	132	15111-7218-1	130	15301-7247-0	41	15521-7291-1	34	31220-2649-3	81
08101-06305	53	15111-7219-1	82	15301-7249-0	41	15521-7299-2	41	31355-2926-1	124
08101-06305	56	15111-7219-1	130	15301-7303-0	36	15521-7314-1	35	31355-2958-1	124
08101-06306	53	15111-7220-2	82	15307-1108-1	11	15521-7332-1	7	31355-3819-1	90
08101-06306	73	15111-7220-2	130	15321-0551-4	16	15521-7333-1	7	31355-3831-1	98
08101-06307	71	15121-5385-2	25	15321-1405-1	14	15521-7334-1	34	32150-2386-2	66
08103-06205	28	15121-5386-1	25	15321-5101-3	27	15521-7341-1	36	32150-2846-1	112
08121-06002	21	15121-7305-7	36	15321-6401-2	38	15521-7411-1	38	32210-2758-1	49
08143-06202	36	15201-2105-2	20	15321-6442-2	38	15521-9150-1	15	32210-2758-1	92
08143-06302	36	15221-0175-1	5	15321-6595-5	106	15521-9233-1	30	32240-2392-1	66
08151-06205	55	15221-0337-3	4	15321-7334-1	34	15521-9331-1	16	32240-2392-1	67
08151-06205	61	15221-0338-3	1	15321-7348-1	36	15521-9401-1	8	32240-2395-1	66
08151-06205	62	15221-0339-2	1	15321-7351-1	36	15521-9402-1	9	32240-2395-1	67
08151-06305	53	15221-0349-3	4	15321-7425-2	36	15521-9602-2	1	32240-3446-1	110
08151-06305	56	15221-1311-4	14	15325-0001-A	14	15521-9602-2	4	32240-3734-2	100
08153-06205	27	15221-1312-4	14	15325-7327-1	34	15521-9603-2	1	32240-3745-1	100
08241-05206	53	15221-1315-2	14	15341-0559-1	16	15521-9603-2	6	32240-3746-1	100
08401-51109	78	15221-1324-2	14	15341-0559-1	83	15525-0011-A	16	32240-3769-6	101
08490-00001	45	15221-1336-1	14	15341-0559-1	131	15525-7292-1	34	32240-7111-3	142

https://tractormanualz.com/

PART NO.	PAGE	PART NO.	PAGE	PART NO.	PAGE	PART NO.	PAGE	PART NO.	PAGE
32240-7121-4	142	34260-3727-1	92	37150-2177-1	55	37150-3660-4	94	37650-4328-0	79
32240-7122-4	142	34350-3689-2	141	37150-2177-1	61	37150-3661-4	94	37650-4332-1	80
32244-7118-1	142	34650-5914-2	50	37150-2179-1	55	37150-3712-2	92	37650-4333-4	80
32260-2918-2	122	34650-5933-2	68	37150-2179-1	61	37150-3765-3	94	37650-4336-1	81
32435-1759-1	124	35110-7151-2	143	37150-2194-1	56	37150-3766-1	100	37650-4344-0	77
33255-7401-2	108	35110-7152-4	143	37150-2211-3	58	37150-3767-3	95	37650-4357-0	78
34150-1283-0	86	35110-7153-1	143	37150-2215-1	53	37150-3768-5	95	37650-4359-0	78
34150-1283-0	87	35110-7154-2	143	37150-2311-1	56	37220-1471-4	44	37650-4362-0	78
34150-1283-0	88	35110-7155-1	144	37150-2312-3	56	37220-2714-1	71	37650-4367-0	73
34150-1283-1	88	35110-7157-1	144	37150-2312-3	68	37220-3663-1	95	37650-4368-0	73
34150-1414-4	49	35110-7180-0	142	37150-2313-2	56	37220-3713-2	100	37650-4375-0	145
34150-1416-2	50	35110-7180-1	143	37150-2354-2	64	37220-3731-1	100	37650-4376-0	145
34150-1417-1	50	35110-7181-1	143	37150-2355-1	64	37220-3743-3	100	37650-4386-0	86
34150-1426-1	132	35110-7182-1	143	37150-2357-2	64	37220-3744-1	100	37650-4394-0	86
34150-1484-2	44	35170-2471-1	65	37150-2371-4	66	37220-3761-4	101	37650-4396-1	87
34150-1563-2	114	35170-2472-1	65	37150-2381-2	66	37220-3764-2	95	37650-4399-1	86
34150-1739-2	140	35240-3465-1	106	37150-2411-2	68	37220-3769-3	95	37650-4417-0	132
34150-2125-2	50	35240-9916-0	71	37150-2413-4	68	37220-9108-3	112	37650-4419-0	132
34150-2156-1	53	35240-9917-0	71	37150-2431-1	68	37220-9109-3	112	37650-4428-1	132
34150-2165-1	55	35240-9918-0	71	37150-2461-2	64	37220-9126-1	61	37650-4435-0	132
34150-2165-1	61	35250-4321-0	80	37150-2462-2	64	37220-9133-1	112	37650-4452-0	46
34150-2194-2	56	35305-2351-2	64	37150-2463-1	64	37220-9134-1	71	37650-4490-0	80
34150-2194-2	62	35305-2352-2	64	37150-2476-1	65	37220-9146-0	71	37650-9106-0	53
34150-2217-2	54	35305-2353-1	64	37150-2485-5	66	37220-9147-0	71	37720-2822-1	42
34150-2261-1	54	35320-1717-3	139	37150-2533-2	55	37220-9148-0	71	37720-4352-0	77
34150-2262-1	54	35340-2178-2	55	37150-2536-3	61	37230-2683-3	71	37720-4355-0	77
34150-2263-1	54	35340-2178-2	61	37150-2538-0	132	37260-2816-2	42	37720-4365-0	73
34150-2361-3	64	35340-2179-2	56	37150-2541-3	62	37300-1450-1	44	37720-4366-0	73
34150-2362-1	64	35340-2179-2	63	37150-2542-2	62	37300-2612-5	58	37720-4369-0	73
34150-2372-2	66	36225-7549-2	109	37150-2616-1	59	37300-2891-2	113	37720-4411-1	132
34150-2374-2	66	36919-5665-0	108	37150-2617-1	59	37300-3512-1	136	37720-4415-0	132
34150-2394-1	66	37150-1541-2	44	37150-2618-1	59	37300-35141	136	37720-4418-1	132
34150-2394-1	66	37150-1542-2	44	37150-2648-1	57	37300-3732-4	100	37720-4423-0	132
34150-2435-1	68	37150-1584-2	113	37150-2648-1	81	37300-3749-1	100	37720-4431-0	132
34150-2468-1	64	37150-1584-2	114	37150-2663-2	59	37650-1128-1	87	37800-4387-1	58
34150-2469-1	65	37150-1682-4	102	37150-2664-3	59	37650-1128-1	88	37800-4387-1	81
34150-2532-1	62	37150-2121-6	50	37150-2666-1	60	37650-1260-1	87	37805-4350-1	43
34150-2661-4	58	37150-2152-1	53	37150-2667-4	60	37650-1260-1	88	37805-4350-1	78
34150-28431	112	37150-2155-1	55	37150-2667-5	60	37650-1270-1	87	38180-2644-1	57
34150-2843-1	112	37150-2155-1	55	37150-2737-1	42	37650-1270-1	88	38180-2867-1	114
34150-2939-1	109	37150-2155-1	61	37150-2737-1	70	37650-2128-2	48	38240-1639-0	102
34150-3723-2	93	37150-2155-1	62	37150-2737-1	102	37650-2128-2	133	38240-1652-0	103
34150-3725-2	93	37150-2160-2	53	37150-2756-1	70	37650-2153-0	53	38240-2141-2	49
34150-3726-1	93	37150-2168-2	55	37150-2818-2	42	37650-2171-0	55	38240-2537-1	62
34150-3764-4	101	37150-2168-2	61	37150-2824-6	42	37650-2192-0	56	38245-1430-1	44
34150-3764-4	142	37150-2172-3	55	37150-2827-5	42	37650-2819-0	42	38245-1430-2	44
34150-3782-1	96	37150-2172-3	61	37150-2842-1	112	37650-4313-0	79	38260-2216-1	60
34150-3786-3	96	37150-2173-3	55	37150-3447-1	68	37650-4314-0	74	38325-1351-1	82
34150-3787-2	96	37150-2174-1	55	37150-3447-1	95	37650-4314-0	79	38430-1483-1	44
34220-1451-2	44	37150-2174-1	61	37150-3447-1	110	37650-4316-0	79	38430-3689-1	95
34220-3738-1	100	37150-2175-3	55	37150-3456-4	109	37650-4317-0	73	38430-4529-2	127
34220-3748-2	100	37150-2175-3	61	37150-3640-5	94	37650-4317-0	79	38430-4529-2	129
34260-1719-1	139	37150-2176-1	55	37150-3641-1	94	37650-4322-1	79	38435-2821-2	42
34260-3688-1	95	37150-2176-1	61	37150-3642-1	94	37650-4322-2	79	38435-2821-3	42
34260-3689-1	94	37150-2177-1	54	37150-3643-1	94	37650-4327-0	79	38440-4331-4	80

https://tractormanualz.com/

PART NO.	PAGE	PART NO.	PAGE	PART NO.	PAGE	PART NO.	PAGE	PART NO.	PAGE
38440-4335-4	80	84612-2492-2	66	84612-4466-0	47	E5500-03142	4	E5500-21353	20
38440-4388-1	80	84612-2549-0	52	84612-6050-0	27	E5500-03143	4	E5500-22014	20
38440-4424-0	132	84612-2734-1	70	84612-7829-0	52	E5500-03313	4	E5500-22015	20
38440-4475-1	47	84612-2765-0	146	84612-8385-0	115	E5500-03314	4	E5500-22016	20
38440-4475-1	84	84612-2928-1	52	84612-8395-0	115	E5500-03315	4	E5500-22142	21
38440-4498-1	57	84612-2929-1	107	84612-9102-1	68	E5500-03451	4	E5500-23382	21
38440-4498-1	80	84612-2973-0	52	84612-9107-1	55	E5500-03452	4	E5500-24012	18
38455-2314-1	53	84612-2974-0	52	84612-9110-0	112	E5500-04362	8	E5500-24252	18
38630-4476-1	47	84612-2981-1	52	84612-9127-0	62	E5500-04363	8	E5500-25013	23
38630-4476-1	84	84612-3261-0	107	84612-9136-4	71	E5500-04364	8	E5500-25014	23
53143-7311-2	106	84612-3262-0	107	84612-9137-0	70	E5500-04365	8	E5500-25015	23
54207-6325-1	121	84612-3262-1	107	84612-9138-0	70	E5500-04462	8	E5500-25163	23
55611-3146-1	133	84612-3262-2	107	84612-9139-0	70	E5500-04463	8	E5500-25164	23
55611-3146-2	133	84612-3370-0	108	84612-9140-0	70	E5500-04464	8	E5500-33142	16
62331-1853-2	64	84612-3401-1OE	105	85726-1680-1	102	E5500-04812	8	E5500-35152	2
62331-1853-2	65	84612-3401-2	105	85726-2443-1	68	E5500-04813	8	E5500-35153	2
62331-1853-2	68	84612-3404-0	105	85726-4458-1	46	E5500-04822	8	E5500-35154	2
70416-5144-1	71	84612-3423-1	105	85726-5463-1	147	E5500-04823	8	E5500-36932	7
70515-1633-4	52	84612-3423-2	105	94612-1826-1	119	E5500-11301	22	E5500-39013	2
76591-3625-1	98	84612-3424-0	105	94612-1826-1	127	E5500-11302	22	E5500-42412	27
76591-4319-0	113	84612-3425-0	105	94612-1826-1	129	E5500-11762	10	E5500-42501	26
76591-5449-0	104	84612-3426-0	105	94612-1836-1	126	E5500-11763	10	E5500-51012	27
76706-1481-1	62	84612-3427-0	105	94612-1836-1	128	E5500-11822	10	E5500-51662	31
76711-5452-0	13	84612-3428-1	105	94612-2328-2	127	E5500-12372	12	E5500-52112	27
76KD-0121-2	82	84612-3430-0	105	94612-2328-2	129	E5500-12412	12	E5500-52122	27
76KD-0121-2	131	84612-3444-2	110	94612-4817-1	126	E5500-12432	12	E5500-53712	25
76KD-0168	115	84612-3446-2	110	94612-4817-1	128	E5500-12433	12	E5500-53713	25
76KP-1737-1	68	84612-3447-1	110	94612-5515-1	127	E5500-12434	12	E5500-53714	25
82KC-0640	116	84612-3561-0	137	94612-5515-1	129	E5500-12435	12	E5500-53722	25
82KC-0640	118	84612-3581-4	138	94612-9104-1	126	E5500-13112	14	E5500-53723	25
82KC-0640	118	84612-3626-0	98	94612-9104-1	128	E5500-13122	14	E5500-53724	25
82KC-0641	116	84612-3777-0	90	94612-9125-1	126	E5500-13152	14	E5500-53732	25
82KC-0641	118	84612-3781-1	97	94612-9125-1	128	E5500-13332	14	E5500-53733	25
82KC-0641	118	84612-3784-0	96	94612-9361-1	126	E5500-13362	14	E5500-53734	25
84612-1337-0	104	84612-4301-0	137	94612-9361-1	128	E5500-14232	15	E5500-54522	13
84612-1382-0	47	84612-4312-0	137	94612-9459-1	126	E5500-14502	16	E5500-54552	13
84612-1383-0	46	84612-4313-0	137	94612-9459-1	128	E5500-14505	16	E5500-54553	13
84612-1418-1	49	84612-4315-0	137	99415-1503-1	147	E5500-14522	17	E5500-54562	13
84612-1438-0	62	84612-4316-0	138	99471-2210-3	142	E5500-14523	17	E5500-54563	13
84612-1439-0	62	84612-4319-0	138	99571-2214-4	142	E5500-15112	18	E5500-57151	32
84612-1445-0	62	84612-4323-1	79	99571-2215-4	142	E5500-15552	18	E5500-57212	33
84612-1681-1	102	84612-4352-0	138	99571-2282-3	143	E5500-15553	18	E5500-57382	33
84612-1822-0	118	84612-4355-0	138	99571-2284-1	143	E5500-16172	27	E5500-63014	23
84612-1823-0	108	84612-4367-0	138	C5510-43101	109	E5500-16173	27	E5500-63015	23
84612-1823-0	115	84612-4393-0	138	C5510-43101	109	E5500-16272	18	E5500-63016	23
84612-1823-0	118	84612-4436-0	132	C7810-43211	109	E5500-21014	20	E5500-64012	38
84612-1824-0	115	84612-4451-0	46	E5205-05552	16	E5500-21015	20	E5500-64422	38
84612-1825-0	115	84612-4453-1	46	E5205-57482	31	E5500-21053	20	E5500-65512	26
84612-2131-2	142	84612-4453-1	84	E5205-58812	7	E5500-21115	20	E5500-72912	34
84612-2131-3	142	84612-4457-0	46	E5405-14514	16	E5500-21116	20	E5500-72913	34
84612-2161-0	61	84612-4461-1	46	E5405-72531	39	E5500-21153	20	E5500-73012	34
84612-2174-1	63	84612-4462-0	46	E5500-02313	1	E5500-21164	20	E5500-73142	35
84612-2176-1	63	84612-4463-0	47	E5500-03042	4	E5500-21203	20	E5500-73262	34
84612-2178-1	61	84612-4464-0	46	E5500-03045	4	E5500-21332	20	E5500-73263	34
84612-2359-1	65	84612-4465-0	47	E5500-03046	4	E5500-21352	20	E5500-73342	1

https://tractormanualz.com/

PART NO.	PAGE	PART NO.	PAGE	PART NO.	PAGE	PART NO.	PAGE	PART NO.	PAGE
E5500-73342	34	E6200-04622	24	E6305-54421	32	T2240-44112	132	T2280-17572	140
E5500-73432	37	E6200-04623	24	E6305-92021	32	T2240-44902	80	T2280-17573	140
E5500-73512	36	E6200-22312	21	E6305-96651	32	T2240-44903	80	T2280-17991	114
E5500-74252	36	E6200-23472	21	E6305-96652	32	T2240-71042	142	T2280-17992	114
E5500-74283	39	E6200-23482	21	E6850-13561	4	T2240-71043	142	T2280-18711	119
E5500-74284	39	E6200-24112	21	E6850-13581	4	T2240-71062	142	T2280-18711GY	119
E5500-74285	39	E6200-35012	2	KX97248-A	90	T2240-71063	142	T2280-18732GY	119
E5500-74286	39	E6200-51653	30	S1173-51235	48	T2240-71542	143	T2280-18742GY	119
E5500-74287	39	E6200-51654	30	S4512-50120	48	T2241-50702	127	T2280-21511	53
E5500-91501	15	E6200-52142	28	T2215-13111	75	T2241-50702	129	T2280-24951	126
E5500-92332	17	E6200-57731	30	T2215-21271	48	T2242-26551	59	T2280-24951	128
E5500-A0071	3	E6200-57742	30	T2215-50541	126	T2242-26562	59	T2280-27621	146
E5500-A0072	3	E6200-57743	30	T2215-50551	126	T2242-26651	59	T2280-27631	146
E5500-A0092	21	E6200-57922	30	T2230-85242	122	T2242-26681	59	T2280-28612	112
E5500-A0110	18	E6200-72631	40	T2240-12602	87	T2242-26682	59	T2280-28613	112
E5500-A0111	18	E6200-72711	41	T2240-12702	87	T2242-26711	60	T2280-28622	112
E5500-A1002	1	E6200-91092	3	T2240-13202	82	T2242-26721	60	T2280-28623	112
E5500-A1006	1	E6200-92620	11	T2240-13202	130	T2242-27341	43	T2280-28811	113
E5515-01622	3	E6200-A0020	27	T2240-14113	49	T2242-27342	43	T2280-29105	122
E5610-57151	32	E6200-A0021	27	T2240-14114	49	T2242-27351	70	T2280-29105OE	122
E5700-73361	40	E6200-A0080	8	T2240-14115	49	T2242-28151	42	T2280-29205	122
E5700-73361	82	E6200-A0090	8	T2240-14712	44	T2242-36851	141	T2280-29205OE	122
E5700-73361	131	E6200-A0100	8	T2240-21112	52	T2242-36852	141	T2280-29222	122
E5800-11161	11	E6200-A0200	6	T2240-21113	52	T2261-26101	57	T2280-29232	122
E5800-12351	10	E6201-32443	7	T2240-21262	50	T2261-26511	57	T2280-29511	124
E5800-12352	10	E6201-50618	37	T2240-22152	53	T2261-27112	71	T2280-29521	124
E5800-12373	12	E6201-50619	37	T2240-22153	53	T2261-27721	146	T2280-29522	125
E5800-22141	21	E6213-64011	38	T2240-25351	61	T2261-43733	145	T2280-29523	125
E5800-52111	27	E6213-64012	38	T2240-25452	62	T2262-14151	50	T2280-29891	122
E5800-64102	38	E6300-04112	6	T2240-26102	57	T2262-29911	124	T2280-32451	110
E5800-73052	36	E6300-04113	6	T2240-26103	57	T2262-29921	124	T2280-33212	104
E5850-54251	30	E6300-04114	6	T2240-26111	57	T2262-38131	90	T2280-33213	104
E5900-04614	23	E6300-04133	6	T2240-26352	57	T2262-38211	91	T2280-34422	110
E5900-04615	23	E6300-04134	6	T2240-26352	80	T2262-38221	98	T2280-34423	110
E5900-11111	11	E6300-04135	6	T2240-26353	57	T2262-38231	98	T2280-34424	110
E5900-12312	10	E6300-11081	11	T2240-26353	80	T2262-38232	98	T2280-34425	110
E5900-12313	10	E6300-11091	11	T2240-26521	57	T2262-43971	86	T2280-34426	110
E5900-32112	3	E6300-23531	21	T2240-26642	59	T2262-45201	98	T2280-36811OE	141
E5900-36412	3	E6300-23541	22	T2240-26742	60	T2262-45202	98	T2280-37111	92
E5900-36413	3	E6300-35681	2	T2240-27332	70	T2262-45301	98	T2280-43111	79
E5900-36414	3	E6300-35692	2	T2240-28171	58	T2262-45302	98	T2280-43411	77
E5900-36415	3	E6300-53003	25	T2240-28242	42	T2265-18303	126	T2280-43431	77
E5900-56051	29	E6300-53004	25	T2240-28272	43	T2265-18303	128	T2280-43911	86
E5900-56052	29	E6300-53005	25	T2240-31352	104	T2265-23711	66	T2280-43912	86
E5900-72732	33	E6300-53621	25	T2240-32442	110	T2265-24581	127	T2280-44361	133
E5900-73031	36	E6300-53651	26	T2240-32443	110	T2265-24581	129	T2280-44591	46
E5900-73032	36	E6300-72462	40	T2240-35342	138	T2265-50541	128	T2280-44711	130
E5900-73411	36	E6301-13561	4	T2240-35812	138	T2265-50551	128	T2280-44712	130
E5900-73412	36	E6301-13581	4	T2240-37213	92	T2280-14781	44	T2280-44713	130
E5900-96021	1	E6301-33812	2	T2240-37223	93	T2280-15651	114	T2280-44714	130
E5900-96021	4	E6301-54122	32	T2240-37292	93	T2280-15713	114	T2280-90402	141
E5900-96031	1	E6303-65511	26	T2240-37652	94	T2280-15714	114	T2280-A0041	92
E5905-11621	11	E6305-01751	5	T2240-43201	80	T2280-17521	140	T2280-A0071	12
E5905-A0011	11	E6305-54221	32	T2240-43962	87	T2280-17522	140	T2280-A0072	12
E5905-A0012	11	E6305-54281	32	T2240-43992	86	T2280-17531	140	T2280-A0073	12

https://tractormanualz.com/

PART NO.	PAGE	PART NO.	PAGE	PART NO.	PAGE	PART NO.	PAGE	PART NO.	PAGE
T2280-A0190	46	T2440-43611	73	T2540-18061	135	T2540-34435	110	T2545-18871	119
T2280-A0200	46	T2440-43811	73	T2540-18062	135	T2540-34436	110	T2545-33271	104
T2305-15871	125	T2440-43821	73	T2540-18062GY	135	T2540-35101	134	T2545-33271GY	104
T2305-18222	120	T2440-43831	73	T2540-18102	115	T2540-35102	134	T2545-33602	108
T2305-18271	116	T2440-43921	86	T2540-18103OE	115	T2540-35103	134	T2545-33603	108
T2305-18271	135	T2440-43932	86	T2540-18104OE	115	T2540-35212	134	T2545-33604	108
T2305-33861	108	T2440-43941	86	T2540-18132	115	T2540-35231	24	T2545-41151	106
T2305-33862	108	T2440-43951	86	T2540-18143	115	T2540-35232	24	T2547-44713	82
T2305-34801	107	T2440-43982	86	T2540-18161OE	118	T2540-35282	134	T2560-34432	110
T2305-38711	90	T2440-71832	144	T2540-18171GY	116	T2540-35311	134	T2565-94401	126
T2305-38801	90	T2445-29311	124	T2540-18181OE	116	T2540-35521	137	T2565-94401	128
T2305-38811	90	T2445-36982	126	T2540-18191OE	118	T2540-36371	96	T2567-44721	83
T2305-38821	90	T2445-36982	128	T2540-18253	116	T2540-38302	98	T2610-21321	142
T2305-38831	90	T2445-38341	99	T2540-18254	116	T2540-38303	98	T2610-50271	104
T2305-38851	90	T2445-38371	99	T2540-18263	116	T2540-38304	98	T2610-50271	135
T2305-38871	90	T2445-38401	99	T2540-18264	116	T2540-38621	99	T2611-26692	126
T2325-50192	126	T2445-38421	99	T2540-18271	135	T2540-41131	106	T2611-26692	128
T2325-50192	128	T2445-38623	99	T2540-18282	118	T2540-41133	106	T2615-53561	127
T2325-50512	126	T2445-38891	99	T2540-18673	116	T2540-41141	106	T2615-53561	129
T2325-50512	128	T2445-50724	127	T2540-18732	119	T2540-41142	106	T2615-54112	127
T2325-50743	127	T2445-50724	129	T2540-18742	119	T2540-41151	106	T2615-54112	129
T2325-50743	129	T2515-11111	75	T2540-18751	119	T2540-41251	106	T2615-55112	127
T2420-11312	75	T2515-11211	88	T2540-18771OE	120	T2540-41251	121	T2615-55112	129
T2420-11351	76	T2515-11221	88	T2540-18811	120	T2540-41342	134	T4124-2387-1	66
T2420-11361	76	T2515-11331	75	T2540-18812	120	T2540-41351	134	T4124-2387-1	67
T2420-11481	75	T2515-11431	75	T2540-18813	120	T2540-43971	88	T4240-14212	50
T2420-13131	75	T2515-11512	75	T2540-18821	120	T2540-50032	126	T4240-17592	124
T2420-13141	75	T2515-12501	88	T2540-18822	120	T2540-50032	128	T4240-18242	115
T2420-13161	84	T2515-12521	88	T2540-18823	120	T2540-50042	126	T4240-23871	66
T2420-13161	84	T2515-12531	88	T2540-18841	120	T2540-50042	128	T4240-27672	146
T2420-13191	84	T2515-12561	89	T2540-18852	118	T2540-50362	126	T4240-27682	146
T2420-13191	84	T2515-12571	89	T2540-18853OE	118	T2540-50362	128	T4240-27742	147
T2440-13431	86	T2515-13123	75	T2540-18862	118	T2540-54601	147	T4240-27743	147
T2440-26341	57	T2515-13151	75	T2540-18863OE	119	T2540-54821	134	T4240-29173	122
T2440-26572	43	T2515-13361	84	T2540-18883	120	T2540-66971	88	T4240-29591	124
T2440-28182	42	T2515-13671	84	T2540-18884	120	T2540-72061	40	T4240-31052	108
T2440-28202	42	T2515-13681	84	T2540-18885	120	T2540-72331	40	T4240-35012	137
T2440-28851	113	T2515-13691	84	T2540-29901	125	T2540-72851	40	T4240-35013	137
T2440-29271	124	T2540-13511	82	T2540-29902	125	T2540-72941	40	T4240-35014	137
T2440-29281	124	T2540-13511	130	T2540-29903	125	T2540-72942	40	T4240-35015	137
T2440-29282	124	T2540-16341	102	T2540-29904	125	T2540-73341	40	T4240-35016	137
T2440-36352	96	T2540-17121	139	T2540-31202	106	T2540-76102	96	T4240-35022	137
T2440-36361	96	T2540-17122	139	T2540-31203	106	T2540-77771	107	T4240-35023	137
T2440-36862	141	T2540-17123	139	T2540-31261	107	T2540-83491	136	T4240-35082	138
T2440-36912	141	T2540-17124	139	T2540-31391	106	T2540-83492	136	T4240-35083	138
T2440-36932	141	T2540-17322	139	T2540-31892	107	T2540-84151	115	T4240-35092	138
T2440-37281	94	T2540-17361	139	T2540-32472	110	T2540-84153OE	115	T4240-35101	138
T2440-43422	77	T2540-17631	139	T2540-33231	135	T2540-A0030	102	T4240-43102	77
T2440-43461	73	T2540-17632	139	T2540-33273	104	T2540-A0102	112	T4240-43103	77
T2440-43483	78	T2540-17633	139	T2540-33332	104	T2541-88212	127	T4240-43132	137
T2440-43492	73	T2540-17711	40	T2540-33521	111	T2541-88212	129	T4240-43133	137
T2440-43511	77	T2540-17721GY	40	T2540-33522	111	T2541-94011	127	T4260-14271	48
T2440-43532	77	T2540-17811	117	T2540-33802	108	T2541-94011	129	T4260-14271	49
T2440-43541	77	T2540-17841	117	T2540-33803	108	T2541-94021	127	T4260-19221	119
T2440-43581	78	T2540-17891	119	T2540-34433	110	T2541-94021	129	T4260-27691	146

https://tractormanualz.com/

PART NO.	PAGE	PART NO.	PAGE	PART NO.	PAGE	PART NO.	PAGE	PART NO.	PAGE
T4260-33631	108								
T4260-74011	108								
T4260-87511	123								
T4260-87511	127								
T4260-87511	129								
T4340-21211	50								
T4340-28982	112								
T4340-33682	105								
T4340-38231	91								
T4340-A0110	41								
T4520-82561	41								
T4620-69272	105								
T4680-14211	50								
T4682-41351	134								
T4710-B03000101	41								
T4815-67371	25								
T4835-17241	139								

https://tractormanualz.com/

INDEX 2

https://tractormanualz.com/

PARTS GROUP	GROUP NO.	PAGE	PARTS GROUP	GROUP NO.	PAGE
<CHASSIS>			FRONT AXLE GROUP	L2203-T170A	73
BONNET 1 GROUP	L2203-T050A	115	FRONT AXLE GROUP	LK2552-T175A	75
BONNET 2 GROUP	T220F-T060A	118	FRONT AXLE SUPPORT GROUP	L2203-T180A	77
BONNET 3 GROUP	L2203-T070A	120	**<HYDRAULIC>**		
BRAKE PEDAL GROUP	T260F-T020A	112	CONTROL VALVE GROUP	T260F-T300A	94
CLUTCH PEDAL GROUP	L2203-T040A	114	FRONT STEERING SYSTEM GROUP	LK2552-T215A	84
FENDER GROUP	LK2554-T080A	122	FRONT STEERING SYSTEM GROUP	T260F-T220A	86
FRONT AXLE FRAME GROUP	L2203-T200A	130	FRONT STEERING SYSTEM GROUP	LK2552-T225A	88
FRONT DRIVE SHIFT GROUP	L2203-T230A	132	HYDRAULIC CYLINDER GROUP	LK2554-T295A	92
FUEL TANK GROUP	L2203-T240A	134	HYDRAULIC PUMP GROUP	L2601-T320A	96
HAND SPEED GOVERNOR GROUP	L2203-T260A	139	HYDRAULIC RELIEF GROUP	T260F-T325A	98
LABEL GROUP	LK2552-T110A	126	HYDRAULIC TUBE GROUP	T260F-T280A	90
LABEL GROUP	LK2554-T110A	128	LIFT ARM GROUP	L2203-T330A	100
OIL FILTER GROUP	L2203-T250A	137	STEERING SYSTEM GROUP	T260F-T470A	102
POSITION CONTROL LEVER GROUP	T220F-T310A	141	**<OPTION>**		
STEP GROUP	T260F-T090A	124	FRONT WHEEL GROUP	L2203-T480A	145
THREE POINT LINKAGE GROUP	L2203-T340A	142	REAR WHEEL GROUP	L2203-T490A	146
<ELECTRICAL>			WEIGHT GROUP	L2203-T500A	147
BATTERY GROUP	LK2554-T120A	104	**<TRANSMISSION>**		
ELECTRICITY SYSTEM 1GROUP	LK2554-T140A	106	BRAKE CASE GROUP	T220F-T010A	42
ELECTRICITY SYSTEM 2 GROUP	LK2554-T150A	108	CLUTCH GROUP	L2203-T030A	44
FENDER LIGHT GROUP	LK2554-T130A	105	CLUTCH HOUSING GROUP	T260F-T350A	49
WIRING GROUP	LK2554-T160A	110	COUNTER SHAFT GROUP	T260F-T380A	55
<ENGINE>			DIFF LOCK PEDAL GROUP	T220F-T400A	59
AIR CLEANER GROUP	TD1400B-1-063	11	DIFF SYSTEM GROUP	T260F-T390A	57
ALTERNATOR GROUP	TD1400-190	38	FRONT SHIFT LEVER & MISSION CASE GR	LK2552-T235A	48
CAMSHAFT GROUP	TD1300-090	18	MAIN SHAFT GROUP	L2203-T370A	53
CYLINDER BLOCK GROUP	TD1300-010	1	MAIN SHIFT LEVER GROUP	LK2554-T430A	66
CYLINDER HEAD COVER GROUP	TD1300-020	4	PROPER SHAFT GROUP	T260F-T210A	46
CYLINDER HEAD COVER GROUP	TD1300B-080	16	PTO SHAFT GROUP	T260F-T410A	61
ENGINE STOP LEVER GROUP	TD1300B-143	30	REAR AXLE CASE GROUP	T220F-T450A	70
FLYWHEEL GROUP	TD1300F-110	23	REAR AXLE GROUP	L2203-T460A	71
FUEL CAMSHAFT GROUP	TD1300-130	27	SHIFT SYSTEM 1 GROUP	T260F-T420A	64
GEAR CASE GROUP	TD1300-030	6	SHIFT SYSTEM 2 GROUP	L2203-T440A	68
GOVERNOR GROUP	TD1300-135	29	TRANSMISSION CASE GROUP	T220F-T360A	52
MAIN BEARING CASE GROUP	TD1400-050	8			
MANIFOLD GROUP	TD1400B-1-060	10			
MUFFLER GROUP	TD1300B-066	12			
NOZZLE HOLDER GROUP	TD1400-120	25			
OIL PAN GROUP	TD1300F-1-015	3			
PISTON & CRANKSHAFT GROUP	TD1300-100	20			
RADIATOR GROUP	TD1400-220	40			
SPEED CONTROL LEVER GROUP	TD1400-150	32			
VALVE ROCKER ARM GROUP	TD1300-070	14			
WATER HOSE GROUP	TD1300B-160	34			
WATER PUMP GROUP	TD1300B-170	36			
<FRONT AXLE>					
DIFF GEAR CASE GROUP	L2203-T190A	79			
FRONT AXLE FRAME GROUP	L2601-T240A	82			

https://tractormanualz.com/