KUKJE Branson 2100 Branson Tractor

Parts Catalogue

BRANSON TRACTOR

CONTENTS

GROUP NO	GROUP NAME	PAGE
000	00 TRACTOR PARTS(2014~)	6
T001A	1. AIR CLEANER	8
T002A	2. COMP MUFFLER	10
T003	3. ACCELERATOR LEVER	12
T005	5. FUEL TANK	14
T006	6. FUEL FILTER & PIPE	16
T007	7. WATER PIPE	18
T008	8. RADIATOR	20
T009	9. RESERVE TANK	22
T010A	10. BATTERY	24
T011-1A	11. SWITCH	26
T011-2A	SWITCH(2017.11)	28
T012-2A	SWITCH PANEL BOARD(2017.11)	30
T012A	12. SWITCH PANEL BOARD	32
T013.1	13. HEAD LIGHT	34
T013.2	13. HEAD LIGHT	36
T014A	14. TAIL LIGHT	38
T015	15. WINKER LAMP	40
T016A	16. ELECTRICAL WIRING	42
T017	17. CLUTCH	44
T018	18. CLUTCH ROD & RELEASE	46
T019	19. CLUTCH PEDAL	48
T020-1	20. CLUTCH HOUSING	50
T020-2	20. CLUTCH HOUSING	52
T021-1	21. CENTER FRAME	54
T021-2	21. CENTER FRAME	56
T022	22. TRANSMISSION CASE	58
T024	24. DIFFERENTIAL GEAR CASE	60
T025	25. REAR CASE	62
T026	26. CLUTCH SHAFT	64
T027	27. PROPELLER SHAFT	66
T030	30. FRONT SHAFT	68
T032-1	32. PTO SHAFT	70
T032-2	32. PTO SHAFT	72
T034	34. MID PTO	74

GROUP NO	GROUP NAME	PAGE
T036	36. MID PTO COVER	76
T037	37. REAR DIFFERENTIAL	78
T038	38. FRONT WHEEL PROPELLER SHAFT	80
T040	40. 2ND SHAFT	82
T042	42. 3RD.SHAFT	84
T044	44. 4TH. SHAFT	86
T046	46. MAIN GEAR SHIFT FORK	88
T047	47. RANGE GEAR SHIFT FORK	90
T048	48. PTO GEAR SHIFT FORK	92
T050	50. DIFFERENTIAL LOCK SHIFT FORK	94
T051	51. REAR AXLE	96
T052	52. BRAKE	98
T053	53. BRAKE ROD	100
T054	54. BRAKE PEDAL	102
T055	55. BRAKE SWITCH	104
T056	56. SIDE BRAKE	106
T057	57. MAIN GEAR SHIFT LEVER	108
T061	61. RANGE GEAR SHIFT LEVER	110
T062	62. FRONT WHEEL DRIVE LEVER	112
T063	63. PTO GEAR SHIFT LEVER	114
T065	65. POSITION CONTROL LEVER	116
T066	66. DIFFERENTIAL LOCK PEDAL	118
T068-1	68. FRONT AXLE FRAME	120
T068-2	68. FRONT AXLE FRAME	122
T069	69. FRONT AXLE CASE	124
T070-1	70. FRONT DIFFERENTIAL	126
T070-2	FRONT DIFFERENTIAL	128
T071	71. DIFFERENTIAL GEAR SHAFT	130
T072-1	72. BEVEL GEAR CASE	132
T072-2	BEVEL GEAR CASE(2017.05)	134
T073	73. FRONT AXLE CASE	136
T074	74. FRONT SPINDLE	138
T075	75. FORNT DRIVE SHAFT	140
T077	77. PST CYLINDER COVER	142
T078	78. TIE ROD	144

GROUP NO	GROUP NAME	PAGE
T079	79. STEERING WHEEL	146
T080	80. STEERING POST	148
T081	81. PST UNIT	150
T082	82. HYDRAULIC PUMP	152
T083	83. HYDRAULIC OIL LINE (SUCTION)	154
T084A	84. HYDRAULIC OIL LINE (DELIVERY)	156
T085A	85. HYDRAULIC STEERING LINE	158
T086-2H	86. HYDRAULIC OIL LINE - HST	160
T088	88. HYDRAULIC OIL LINE (F/M)	162
T090	90. HYDRAULIC CYLINDER	164
T091	91. HYDRAULIC CYLINDER (POSITION TYPE)	166
T092	92. HYDRAULIC PISTON / LIFT ARM	168
T093	93. FEED BACK LEVER	170
T094	94. FEED BACK LEVER (POSITION TYPE)	172
T095	95. CONTROL VALVE	174
T096	96. 3PT LIFT VALVE (POSITION TYPE)	176
T097	97. LIFT LINK	178
T098	98. LIFT ARM	180
T099	99. TOP LINK	182
T100	100. CHECK CHAIN	184
T101	101. DRAW BAR	186
T102	102. PTO SHEILD	188
T103-1	103. HOOD	190
T103-2	103. HOOD	192
T104	104. PANEL COVER	194
T105	105. SHUTTER PLATE	196
T106	106. LEVER GUIDE	198
T108	108. FENDER	200
T109	109. FENDER STAY	202
T110	110. FLOOR SEAT	204
T111	111. SEAT	206
T112	112. SEAT - EU	208
T114	114. STEP	210
T115	115. ROPS	212
T116	116. MID ROPS - PO	214

GROUP NO	GROUP NAME	PAGE
T117	117. SMV BRACKET	216
T118	118. NAME PLATE LAMP ASSY - EU	218
T119	119. 작업등 조합	220
T120A	120. FRONT WHEEL	222
T121A	121. REAR WHEEL	224
T122.1-1A	122. DECAL	226
T122.1-2A	122. DECAL	228
T122.2-1A	122. DECAL	230
T122.2-2A	122. DECAL	232
T124	124. BALLAST WEIGHT	234
T125	125. MIRROR	236
T126	126. SINGLE REMOTE	238
T127	127. LEVER LOADER	240
T128	128. CANOPY - OPTION	242

FIG 000 Branson 2100	00 TRACTOR PARTS(2014~)	Year/Month 2020/02

00 TRACTOR PARTS

ENGINE

FIG 000 Branson 2100	00 TRACTOR PARTS(2014~)	Year/Month 2020/02

KeyNo.	Part Number	Part Name	Quantity	Other
00 TRACTOR P	00 SERIES(2014~)	00 TRACTOR PARTS[2014~]	0	

FIG T001A Branson 2100	1. AIR CLEANER	Year/Month 2020/02

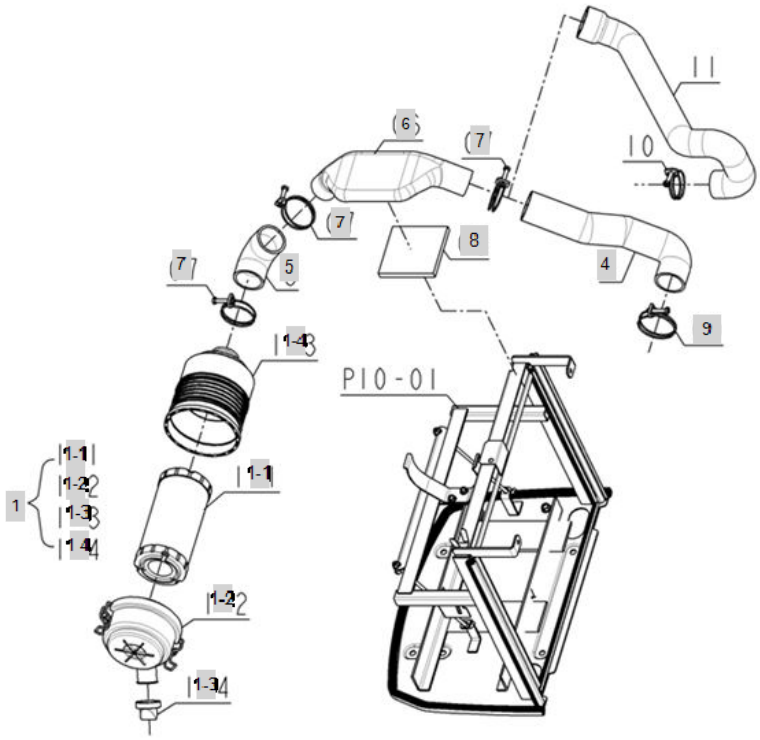

FIG T001A Branson 2100	1. AIR CLEANER	Year/Month 2020/02

KeyNo.	Part Number	Part Name	Quantity	Other
1	EA00000431A	AIR CLEANER ASSY	1	
1-1	EA00000985A	ELEMENT, AIRCLEANER (PRIMARY)	1	
1-2	EA00000986A	BODY	1	
1-3	EA00000987A	COVER ASS'Y	1	
1-4	EA00000988A	VACCUATOR	1	
4	FE02040000A	HOSE, ENGINE(00 SEIRES)	1	
5	FE02050000A	HOSE, AIR CLEANER (00 SERIES)	1	
6	FE02060000A	HOSE, ENGINE II (00 SEIRES)	1	
7	23010-054000	BAND,AIR CLEANER	3	
8	FE02080000A	SPONGE, HOSE(00 SERIES)	1	
9	23010-600000	HOSE BAND	1	

FIG T002A Branson 2100	2. COMP MUFFLER	Year/Month 2020/02

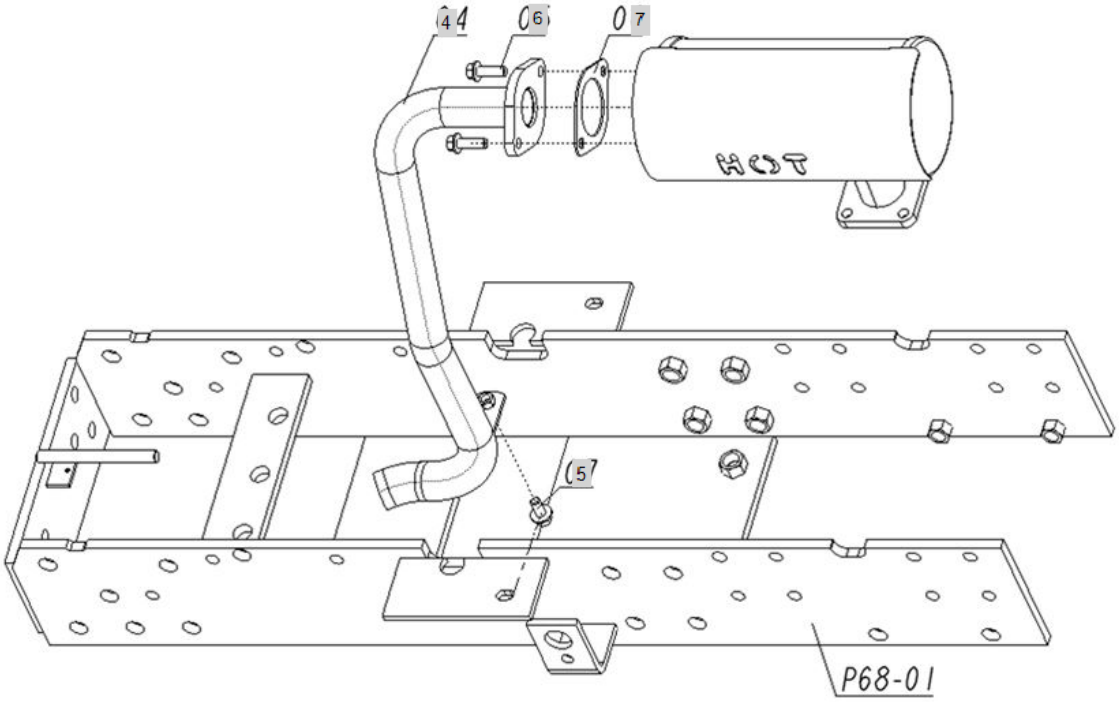

FIG T002A Branson 2100	2. COMP MUFFLER	Year/Month 2020/02

KeyNo.	Part Number	Part Name	Quantity	Other
4	FE03040000A	PIPE, EXHAUST (00 SERIES)	1	
5	26106-080252	SCREW,HEXFLANGEHEADCAP	2	
6	HK0514000EA4	GASKET	1	
7	26014-080202	Bolt, Hexa (8-20)	1	

FIG T003 Branson 2100	3. ACCELERATOR LEVER	Year/Month 2020/02

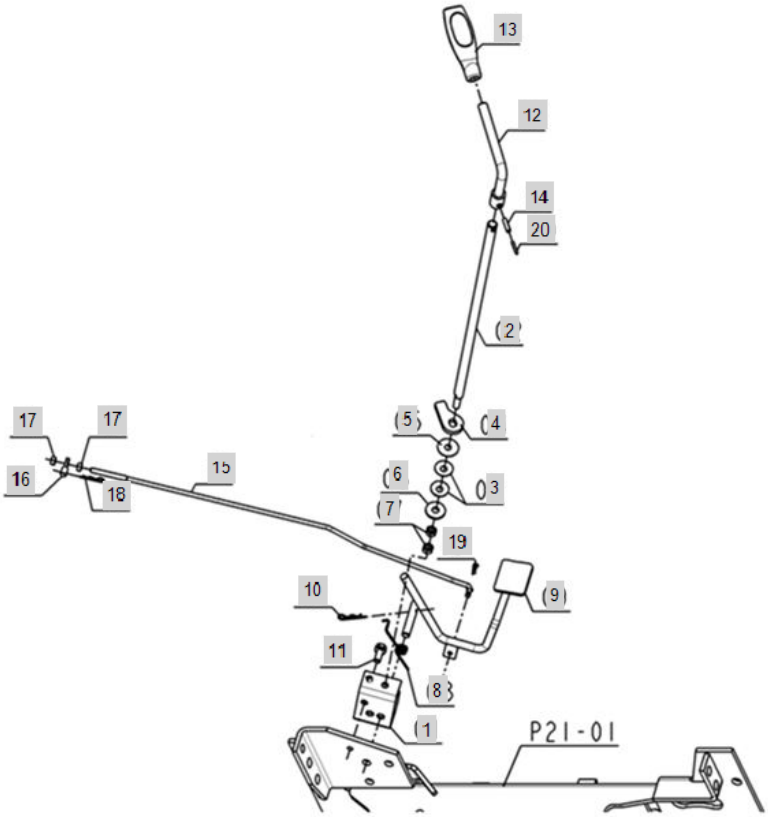

FIG T003 Branson 2100	3. ACCELERATOR LEVER	Year/Month 2020/02

KeyNo.	Part Number	Part Name	Quantity	Other
1	FE04010000A	BRACKET, ACCELATOR (00 SERIES)	1	
2	FE04020000A	ROD, ACCELERATOR	1	
3	FE04030000A	SPRING, ACCELERATOR PLATE (00 SERIES)	2	
4	FE04040000A	ARM, ACCELERATOR (00 SERIES)	1	
5	FE04050000A	WASHER,ACCEL	1	
6	22157-080000	WASHER, PLAIN (Φ 08)	1	
7	26716-080002	NUT,HEX (D8)	2	
8	FE04090000A	SPRING,ACCEL	1	
9	TA00003092A	ACCEL LINK ASSY	1	
10	22360-100000	PIN , SNAP (10Φ)	1	
11	26013-080202	Bolt, Hexa (8-20)	1	
12	FE04140000B	LEVER, ACCEL	1	
13	TA00015801A	KNOB, ACCELERATOR -> TA00015801B	1	
14	22351-050020	PIN, SPRING (5-20)	1	
15	FE04170000A	ROD,CONNECTING ASS'Y	1	
16	FE04180000A	CONNECTOR	1	
17	26712-060002	NUT	2	
18	22360-080000	PIN , SNAP (8Φ)	1	
19	22360-060000	PIN , SNAP (6Φ)	1	
20	22351-030020	PIN, SPRING (3X20)	1	

FIG T005 Branson 2100	5. FUEL TANK	Year/Month 2020/02

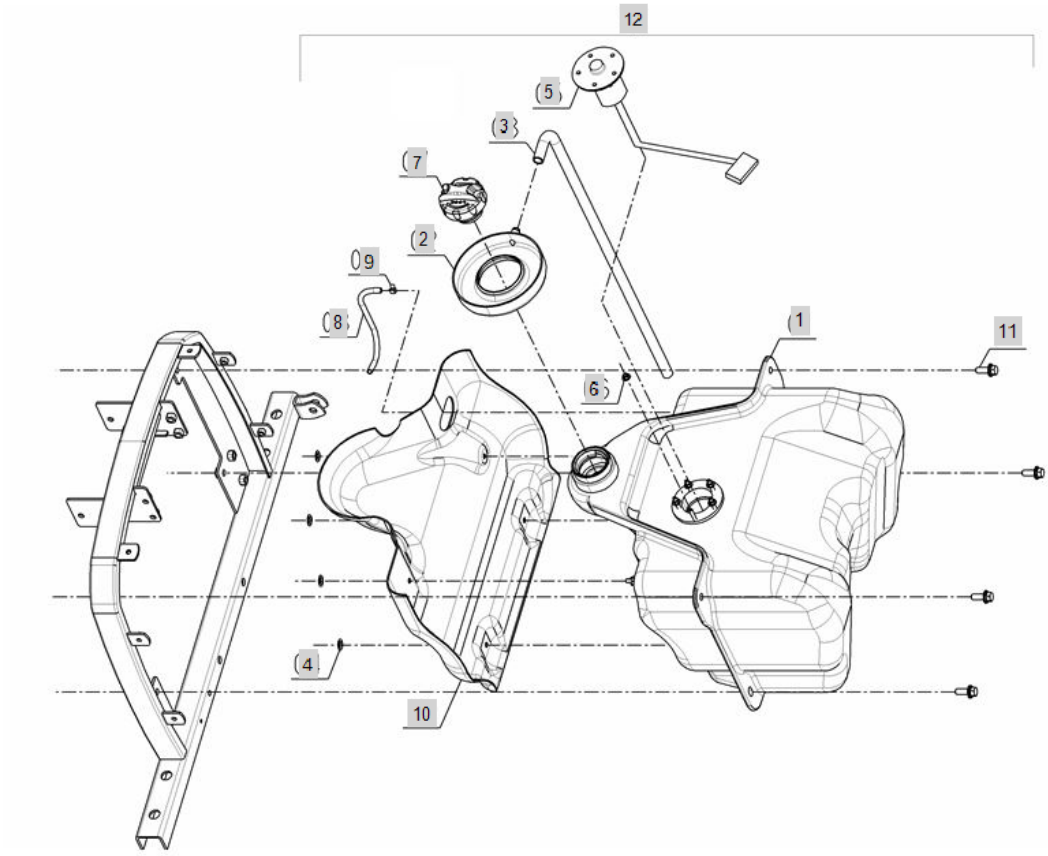

FIG T005 Branson 2100	5. FUEL TANK	Year/Month 2020/02

KeyNo.	Part Number	Part Name	Quantity	Other
1	FE06010000B	FUEL TANK ASSY -> FED0620000D	1	
2	FE06020000A	TRAY,FUEL	1	
3	FE06003000A	PIPE	1	
4	FE06040000A	NUT 6, PUSH	4	
5	HA00000016A	GAUGE,FUEL	1	
6	26367-050002	HEX FLANGE NUT Φ5)	5	
7	TA00017995A	CAP, FUEL FILLER	1	
8	FE07250000B		1	
9	23080-007000	CLIP, PIPE	2	
10	FEB3080000A	COVER,HEAT TROOF	1	
11	26014-080252	Bolt, Hexa (8-25)	4	
12	FE06200000D	FUEL TANK SUB ASS'Y	1	

FIG T006 Branson 2100	6. FUEL FILTER & PIPE	Year/Month 2020/02

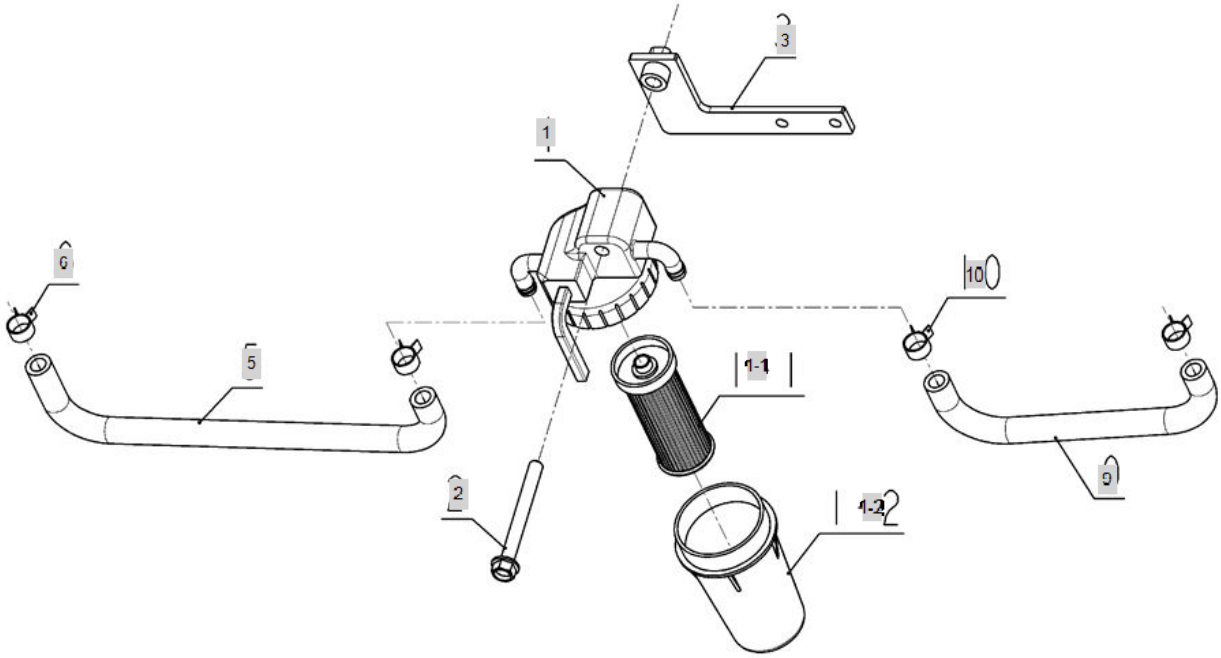

FIG T006 Branson 2100	6. FUEL FILTER & PIPE	Year/Month 2020/02

KeyNo.	Part Number	Part Name	Quantity	Other
1	HK13010000C2	FUEL FILTER ASSY	1	
1-1	HA13040000A4	ELEMENT, FUEL FILTER	1	
1-2	HA13050000B4	FILTER CUP	1	
2	26106-080752	SCREW,HEXFLANGEHEADCAP	1	
3	FE07030000B	BRACKET, FUEL FITLER	1	
5	FE07050000B	TUBE, FUEL	1	
6	23080-013000	Clamp, Hose (Φ13)	2	
9	FE07090000A	TUBE,FUEL	1	
10	23080-013000	Clamp, Hose (Φ13)	2	

FIG T007 Branson 2100	7. WATER PIPE	Year/Month 2020/02

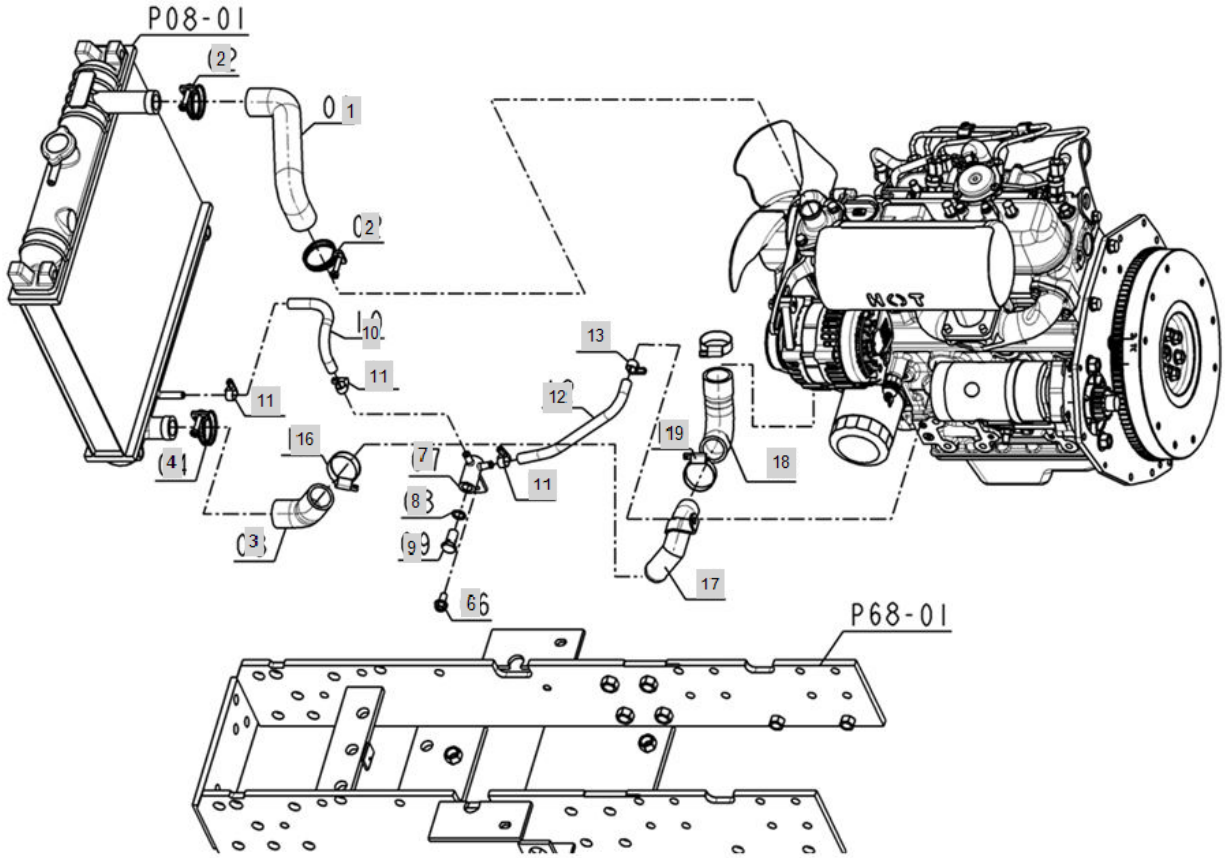

FIG T007 Branson 2100	7. WATER PIPE	Year/Month 2020/02

KeyNo.	Part Number	Part Name	Quantity	Other
1	FE08010000B	HOSE, WATER	1	
2	23010-040000	HOSEBAND	2	
3	FE08030000B	HOSE, WATER	1	
4	23010-040000	HOSEBAND	1	
6	26106-080162	SCREW,HEXFLANGEHEADCAP	1	
7	FBV2300000A	SUB TO-> FBV2300000A3	1	
8	23414-120000	WASHER, PLAIN (Φ 12)	1	
9	23857-060000	BOLT, CONNECTING	1	
10	FE08100000A	HOSE,DRAIN	1	
11	23000-013000	Clip, Hose (Φ13)	3	
12	FE08120000A	HOSE,DRAIN	1	
13	23000-013000	Clip, Hose (Φ13)	1	
16	23000-041000	HOSECLAMP	1	
17	EA00000450C	PIPE WATER	1	
18	EA00000451B	HOSE WATER	1	
19	23000-041000	HOSECLAMP	2	

FIG T008 Branson 2100	8. RADIATOR	Year/Month 2020/02

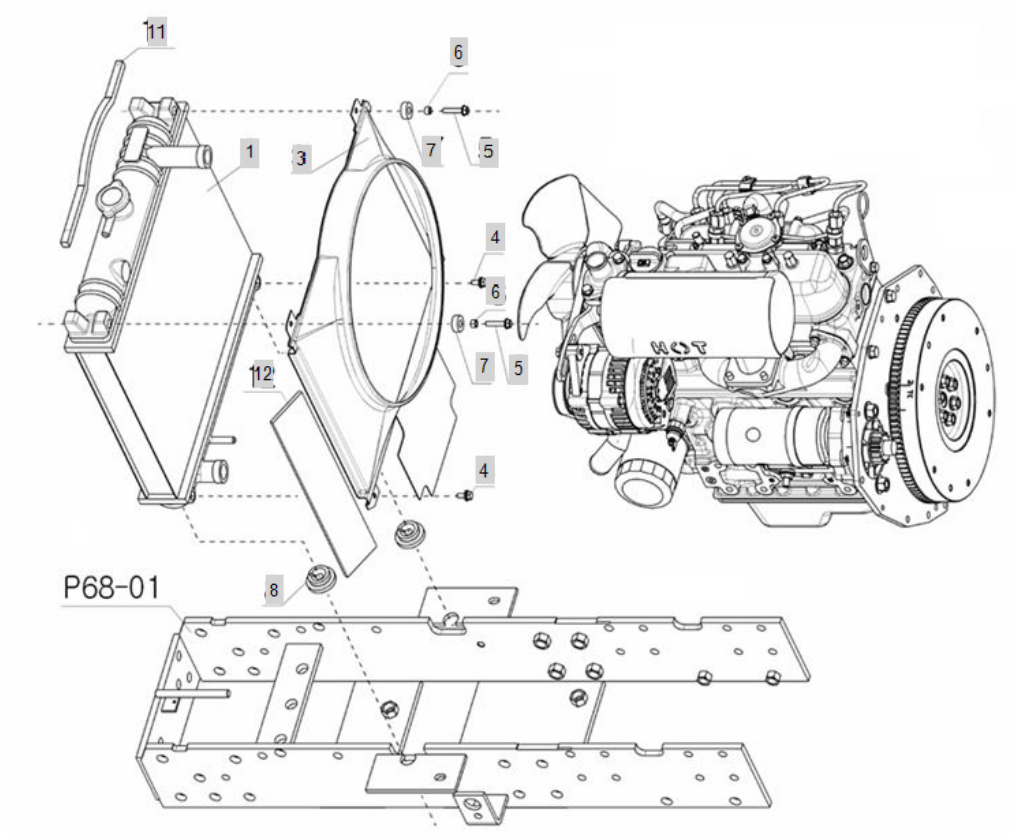

FIG T008 Branson 2100	8. RADIATOR	Year/Month 2020/02

KeyNo.	Part Number	Part Name	Quantity	Other
1	EA00000401B	RADIATOR ASS'Y	1	
3	FE09030000B	KIT SHROUD, FAN	1	
4	26014-060162	Bolt, Hexa (6-16)	2	
5	26106-060302	Bolt, Hexa (6-30)	2	
6	FE11220000A	COLLAR	2	
7	FE11230000A	RUBBER	2	
8	HRA1203300A4	RUBEER, VIBRATION PROOF	2	
11	FE09110000A	SPONGE, RADIATOR	5	
12	FE09120000A	TAPE,RADIATOR	1	

FIG T009 Branson 2100	9. RESERVE TANK	Year/Month 2020/02

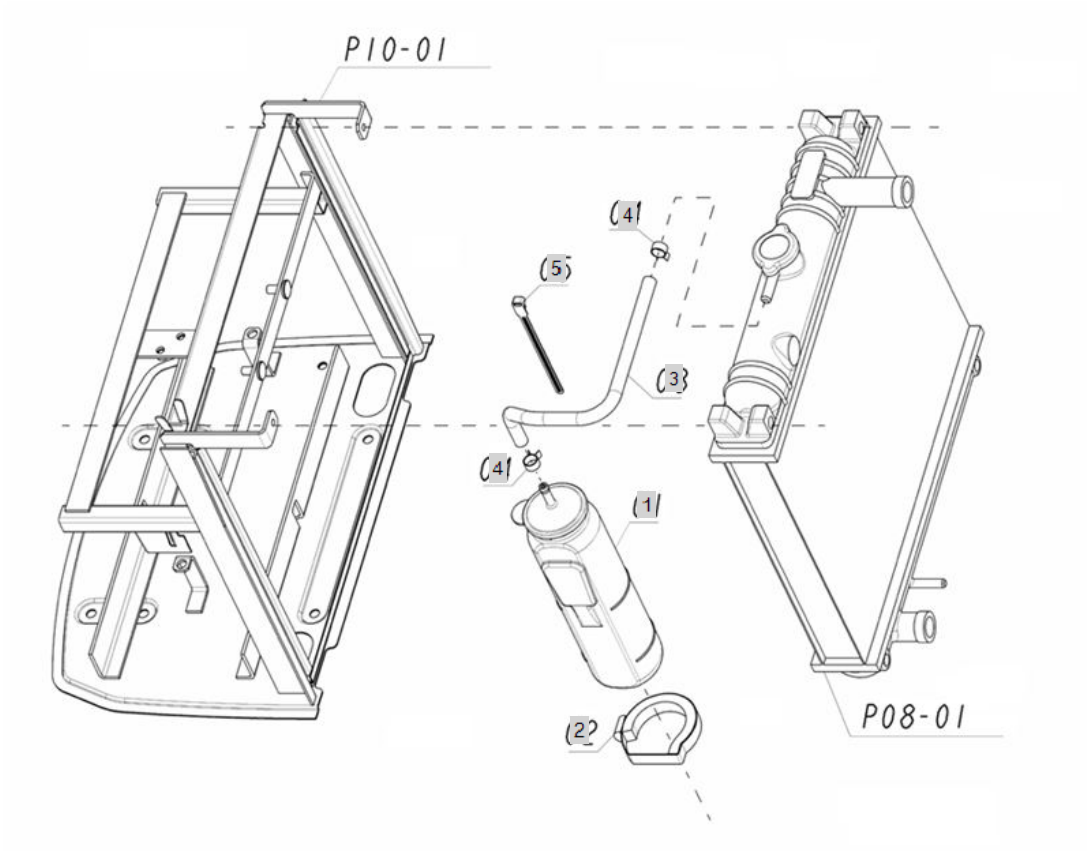

FIG T009 Branson 2100	9. RESERVE TANK	Year/Month 2020/02

KeyNo.	Part Number	Part Name	Quantity	Other
1	CA09270000C2	COOLANT RESERVOIR	1	
2	CA09310000A4	STRAP,SUBTANKMTG	1	
3	FE10020000A	HOSE,TUBE	1	
4	23080-013000	Clamp, Hose (Φ13)	2	
5	TB39260000A4	BAND	1	

FIG T010A Branson 2100	10. BATTERY	Year/Month 2020/02

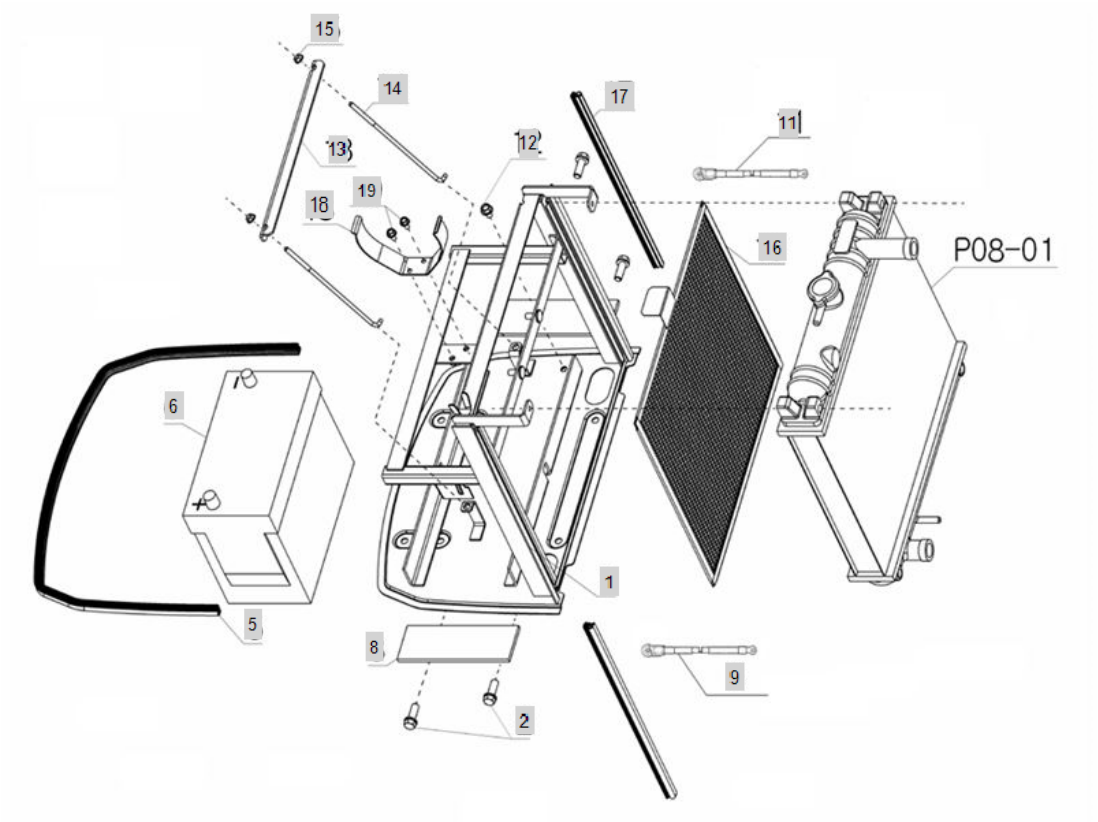

FIG T010A Branson 2100	10. BATTERY	Year/Month 2020/02

KeyNo.	Part Number	Part Name	Quantity	Other
1	FE11010000G	BRACKET, BATTERY	1	
2	26013-100302	SCREW,CAPTIVEWASHERCAP	4	
5	FE11050000A	STRIP	1	
6	HA00000925A	BATT(60AH)	1	
8	TTC4010000A4	TANKRUBBER,DUSTPROOF	2	
9	HA00000075C	CABLE BATTERY(+)	1	
11	HA00000076C	BATTERY CABLE (-)	1	
12	26106-080122	Bolt, Hexa (8-12)	1	
13	FE11130000C	BATTERY FIX BRAKET	1	
14	FE11140000B	BOLT	2	
15	26366-060002	Nut, Hexa (Φ6)	2	
16	FE11180000B	NET, RADIATOR	1	
17	FE11190000A	STRIP B	2	
18	FE11200000A	BRACKET,AIRLEANER	1	
19	26106-060122	HEX BOLT (6-12)	2	

FIG T011-1A Branson 2100	11. SWITCH	Year/Month 2020/02

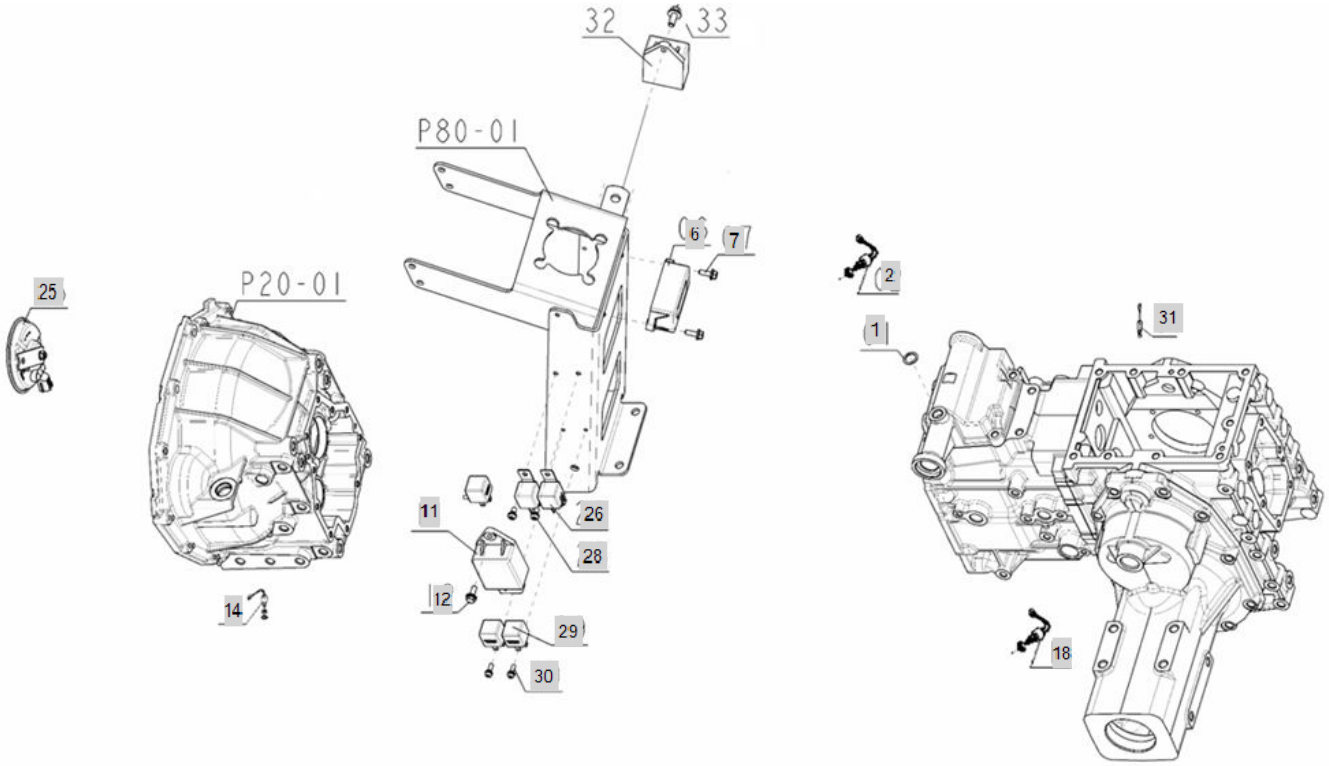

FIG T011-1A Branson 2100	11. SWITCH	Year/Month 2020/02

KeyNo.	Part Number	Part Name	Quantity	Other
1	23414-140000	PACKING14	1	
2	HA00000012A	SWITCH,SAFETY	1	
6	NTC5510000A3	FLASH RELAY	1	
7	26014-060202	BOLT(PW+SW)	2	
11	HA00000013A	CONTROLLER, OPC	1	
12	26014-060202	BOLT(PW+SW)	1	
13	CQI3010000A3	SWTICH, NEUTRAL	1	
14	TZC5140000A3	SAFETY S/W, START	1	
18	TZC5140000A3	SAFETY S/W, START	1	
25	TTD1040000B3	HORN	1	
26	FTB9160000A3	GLOW RELAY (12V-70A)	2	
28	26022-060122	SCREW BOLT W/WASHER	2	
29	FTC5130000A3	RELAY(5P)	2	
30	26023-050162	Screw (5-16)	2	
31	HA00000100A	SWITCH, SEAT SAFETY	1	

FIG T011-2A Branson 2100	SWITCH(2017.11)	Year/Month 2020/02

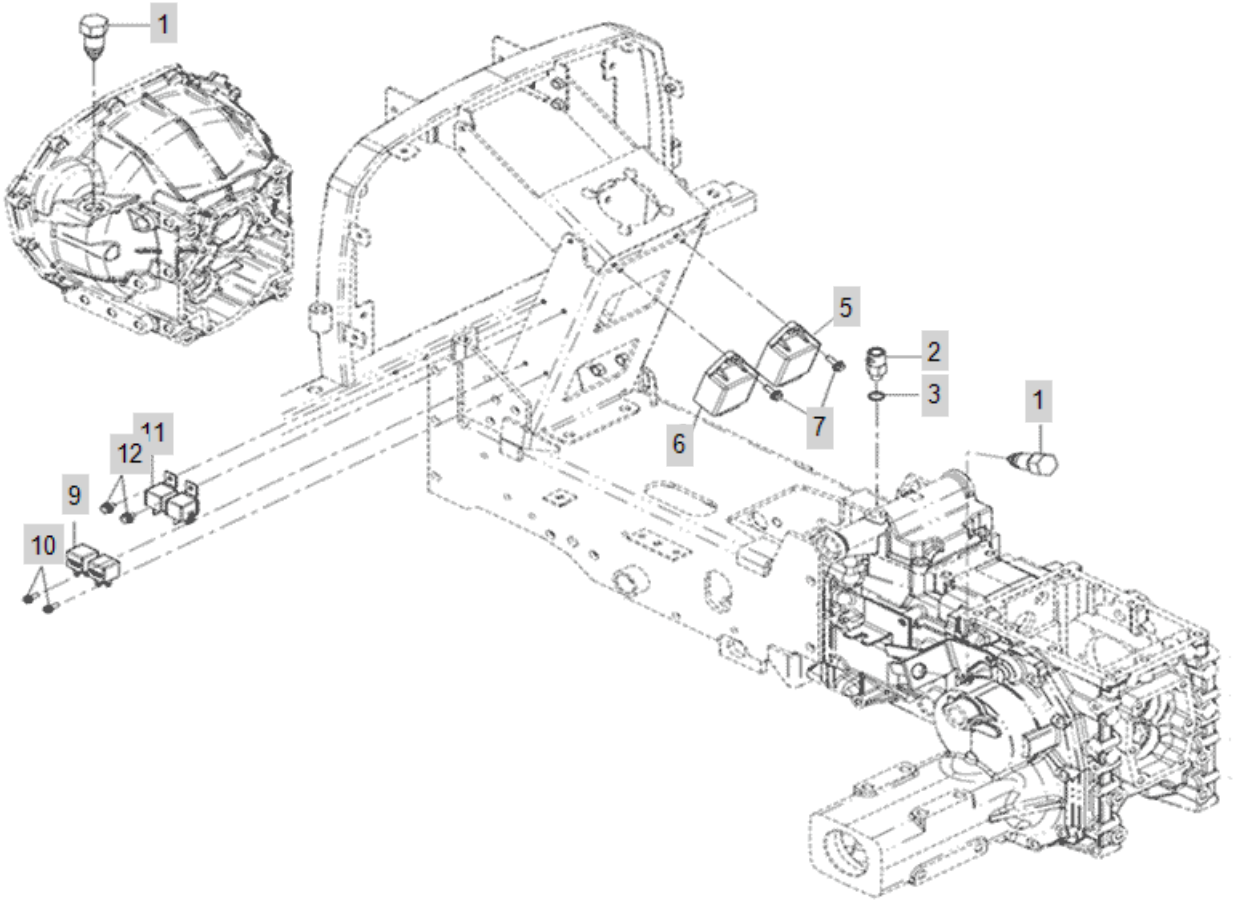

FIG T011-2A Branson 2100	SWITCH(2017.11)	Year/Month 2020/02

KeyNo.	Part Number	Part Name	Quantity	Other
1	TZC5140000A3	SAFETY S/W, START	2	
2	HA00000012A	SWITCH,SAFETY	1	
3	23414-140000	PACKING14	1	
5	HA00000821A	FLASHER RELAY	1	
6	HA00001334A	CONTROL UNIT	1	
7	26014-060202	BOLT(PW+SW)	2	
8	RN66310000A3	Buzzer	1	delete
9	FTC5130000A3	RELAY(5P)	3	
10	26023-050162	Screw (5-16)	1	
11	FTB9160000A3	GLOW RELAY (12V-70A)	2	
12	26022-060122	SCREW BOLT W/WASHER	2	

FIG T012-2A Branson 2100	SWITCH PANEL BOARD(2017.11)	Year/Month 2020/02

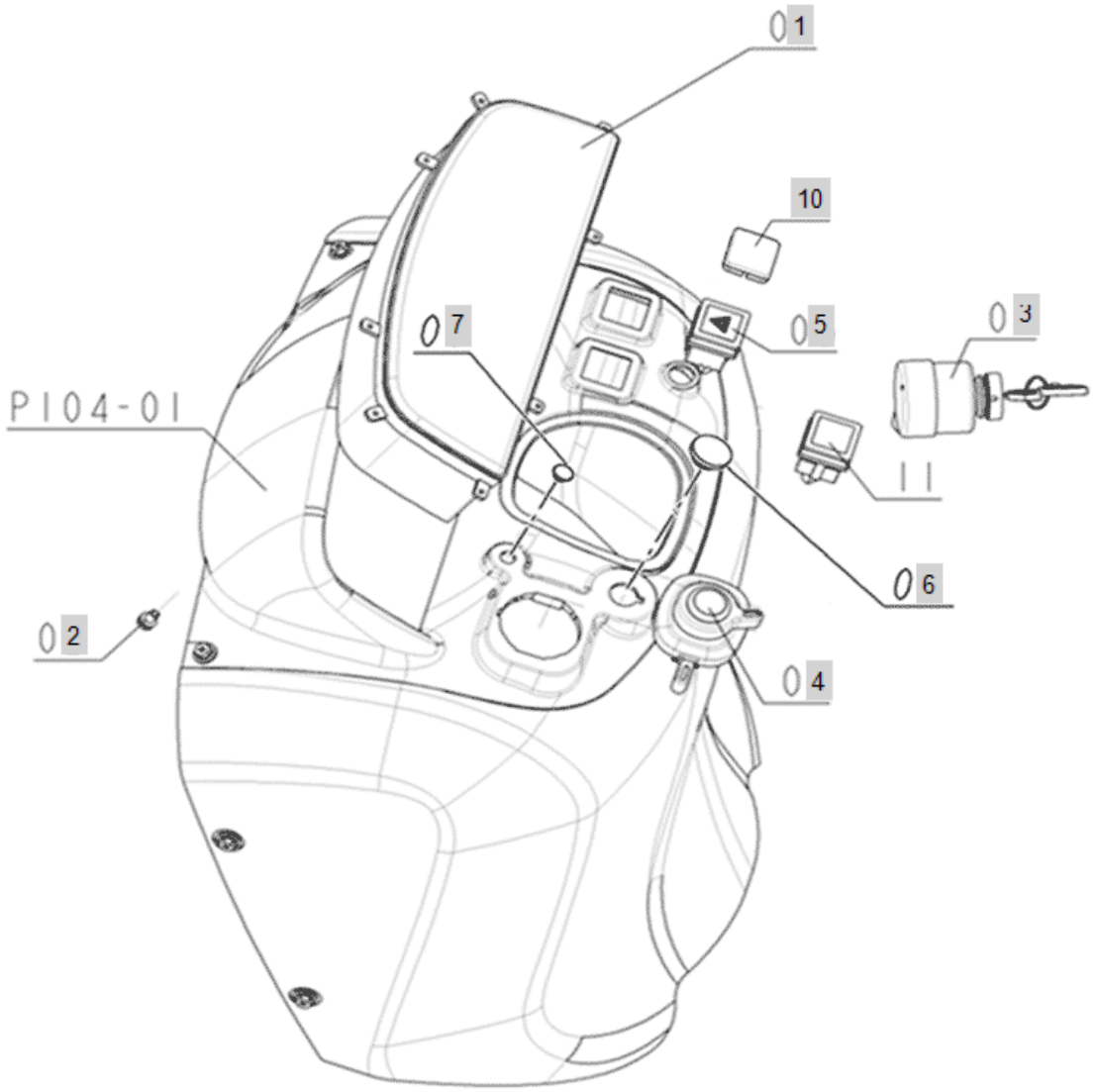

FIG T012-2A Branson 2100	SWITCH PANEL BOARD(2017.11)	Year/Month 2020/02

KeyNo.	Part Number	Part Name	Quantity	Other
1	HA00000722B	METER ASSY	1	
2	22857-400080	TAPPING BOLT	8	
3	TTC5030000C3	IGNITION SWITCH	1	
4	HA00000067A	COMBINATION SWITCH	1	
5	FBK3510000A3	EMERGENCY SWITCH	1	
6	TTC5190000A4	GROMMET20.5	1	
7	TTD6650000A4	RUBBER	1	
10	FEB1030000A	SWITCH RUBBER	1	

FIG T012A Branson 2100	12. SWITCH PANEL BOARD	Year/Month 2020/02

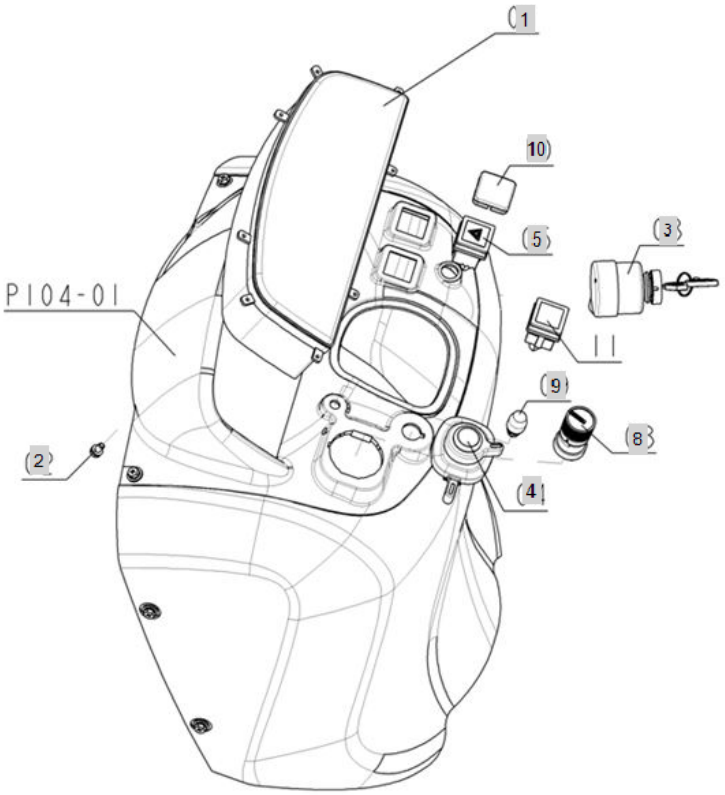

FIG T012A Branson 2100	12. SWITCH PANEL BOARD	Year/Month 2020/02

KeyNo.	Part Number	Part Name	Quantity	Other
1	HA00000722B	METER ASSY	1	
2	22857-400080	TAPPING BOLT	8	
3	TTC5030000C3	IGNITION SWITCH	1	
4	HA00000067A	COMBINATION SWITCH	1	
5	FBK3510000A3	EMERGENCY SWITCH	1	
8	TTC5120000A3	SWITCH.PACKING	1	
9	NTC555E000A3	EMERGENCY STOP SWITCH	1	
10	FEB1030000A	SWITCH RUBBER	1	

FIG T013.1 Branson 2100	13. HEAD LIGHT	Year/Month 2020/02

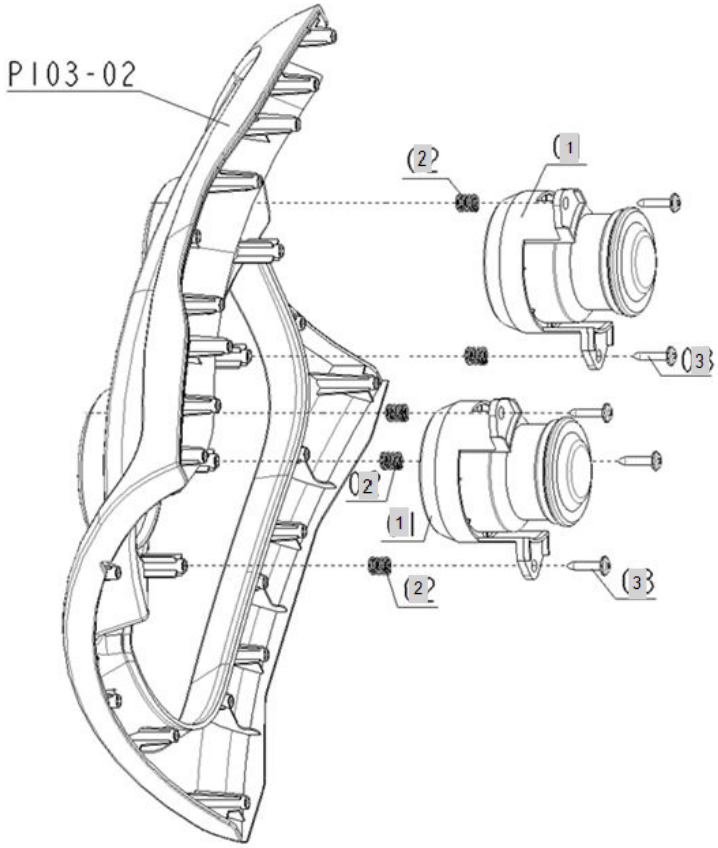

FIG T013.1 Branson 2100	13. HEAD LIGHT	Year/Month 2020/02

KeyNo.	Part Number	Part Name	Quantity	Other
1	TA00030968A	HEAD LAMP(EU)	2	
2	FE15020000A	SPRING,HEADLAMP	6	
3	FE15030000A	(+)SCREW	6	

FIG T013.2 Branson 2100	13. HEAD LIGHT	Year/Month 2020/02

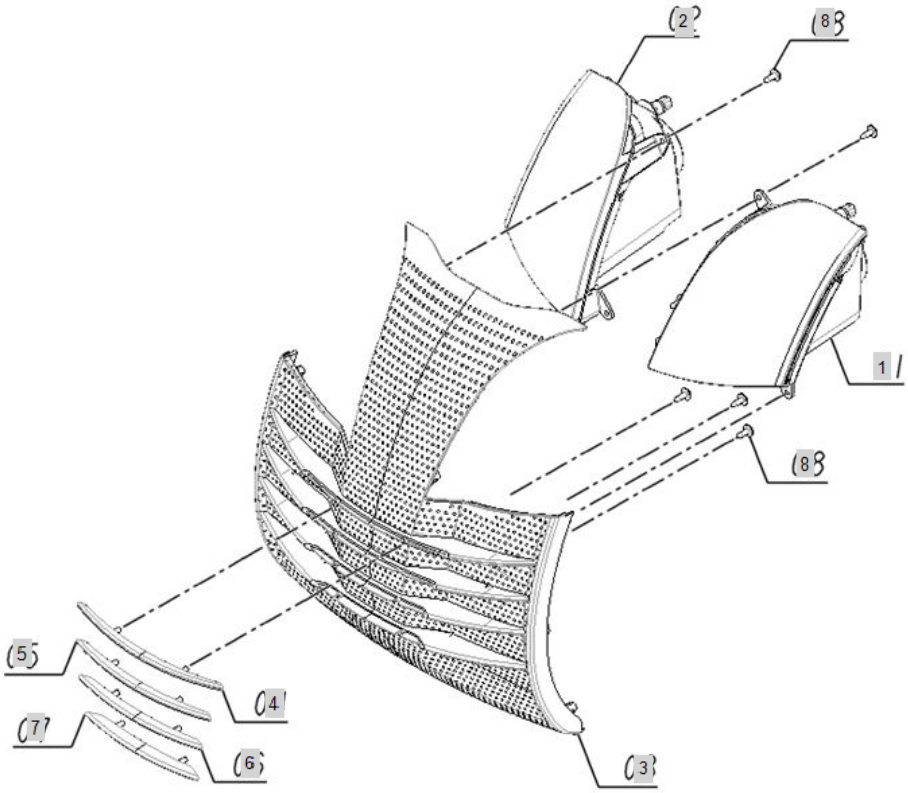

FIG T013.2 Branson 2100	13. HEAD LIGHT	Year/Month 2020/02

KeyNo.	Part Number	Part Name	Quantity	Other
1	HA00000981A	HEAD LAMP(L)	1	
2	HA00000982A	HEAD LAMP(R)	1	
3	TA00041012A	FRONT MASK	1	
4	TA00041013A	DECORATION 1	1	
5	TA00041014A	DECORATION 2	1	
6	TA00041015A	DECORATION 3	1	
7	TA00041016A	DECORATION	1	
8	TTD7090000A4	CROSSRECESSEDHEADTAPPINGSCREW	8	

FIG T014A Branson 2100	14. TAIL LIGHT	Year/Month 2020/02

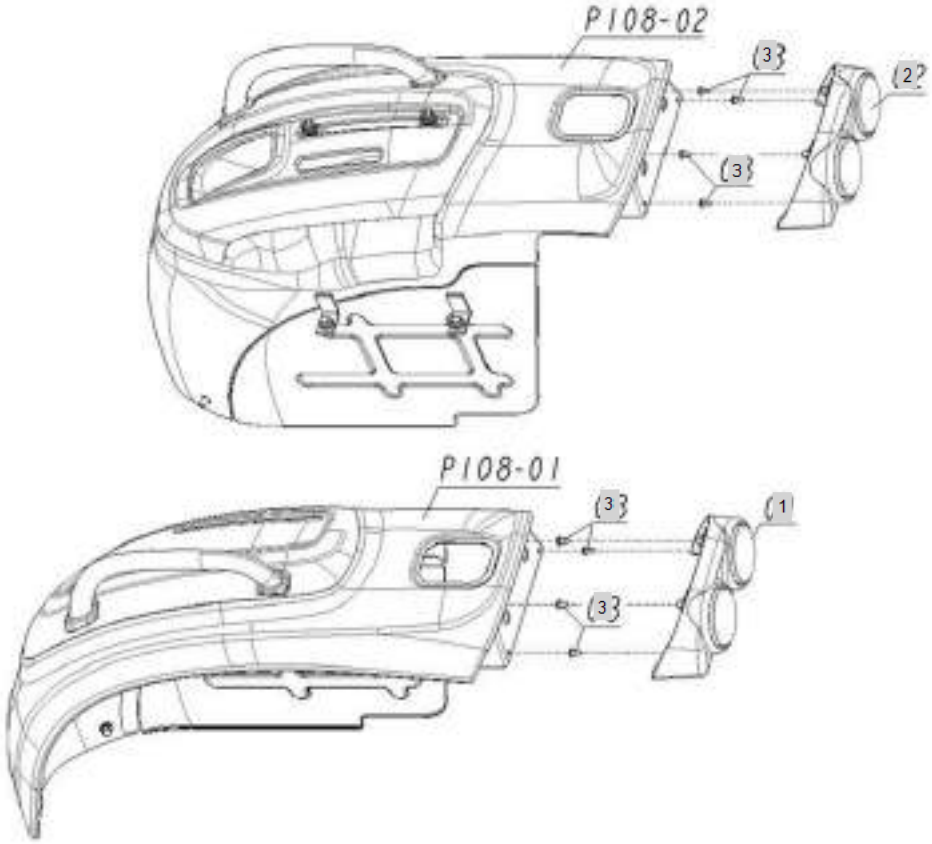

FIG T014A Branson 2100	14. TAIL LIGHT	Year/Month 2020/02

KeyNo.	Part Number	Part Name	Quantity	Other
1	FE17010000B	TAIL RAMP L ASS'Y	1	
2	FE17020000B	TAIL RAMP R ASS'Y	1	
3	TTD7090000A4	CROSSRECESSEDHEADTAPPINGSCREW	8	

FIG T015 Branson 2100	15. WINKER LAMP	Year/Month 2020/02

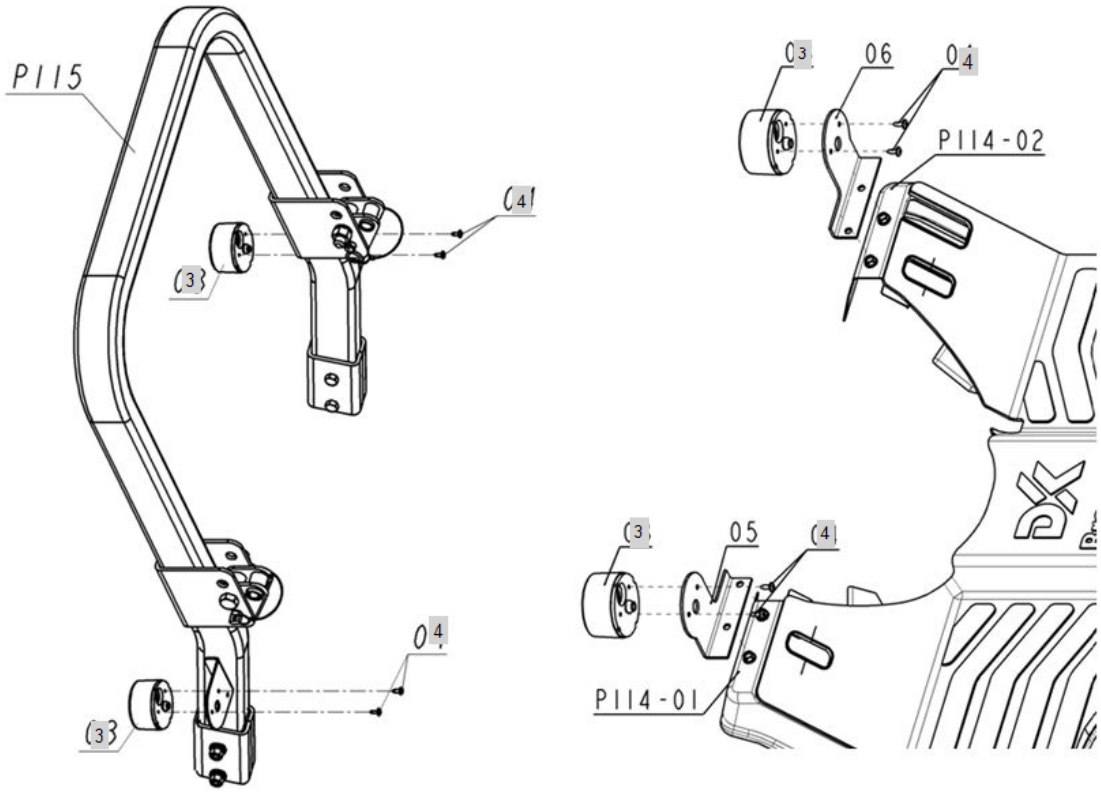

FIG T015 Branson 2100	15. WINKER LAMP	Year/Month 2020/02

KeyNo.	Part Number	Part Name	Quantity	Other
3	HA00000341A	TURN LAMP	2	
4	TTD7090000A4	CROSSRECESSEDHEADTAPPINGSCREW	4	

FIG T016A Branson 2100	16. ELECTRICAL WIRING	Year/Month 2020/02

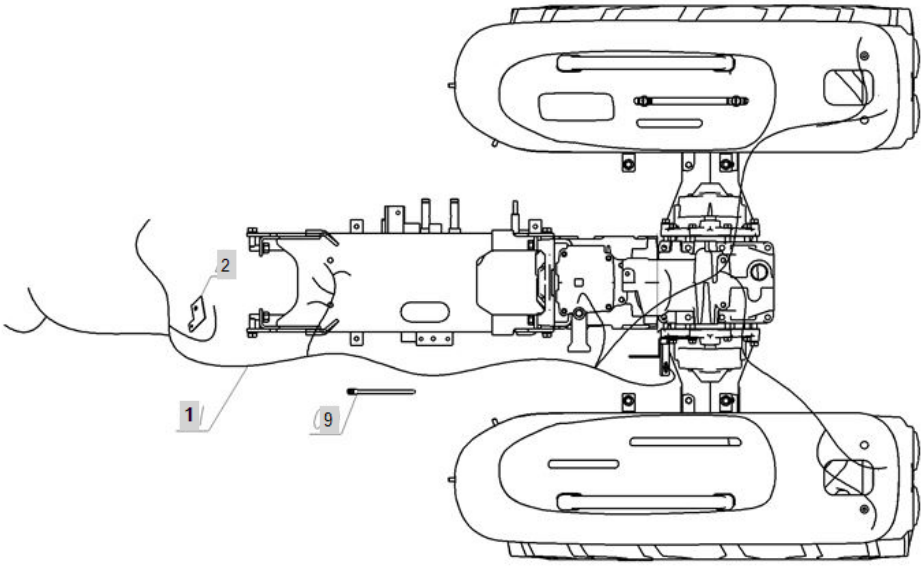

FIG T016A Branson 2100	16. ELECTRICAL WIRING	Year/Month 2020/02

KeyNo.	Part Number	Part Name	Quantity	Other
1	HA00000014H	ASSY WIRE HARNESS	1	
2	FE19020000C	BRAKET	1	
9	TB39260000A4	BAND	5	

FIG T017 Branson 2100	17. CLUTCH	Year/Month 2020/02

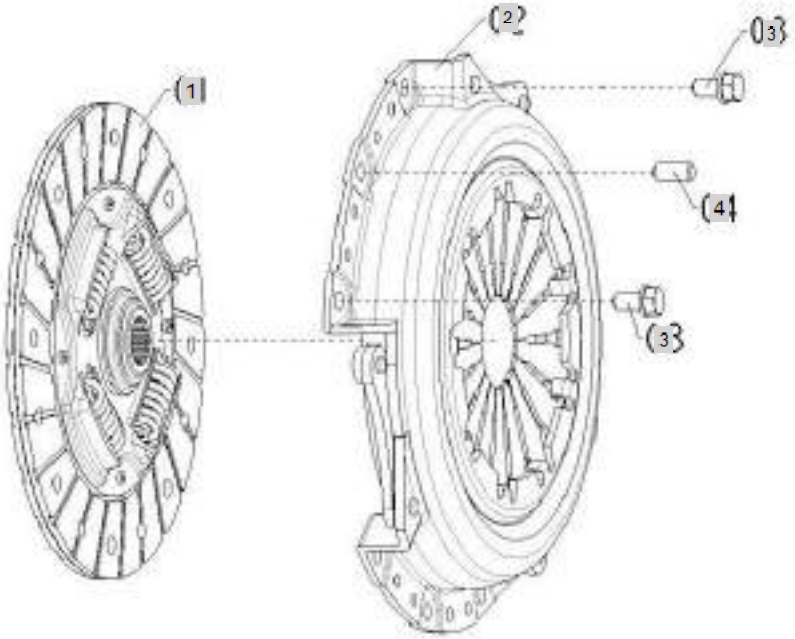

FIG T017 Branson 2100	17. CLUTCH	Year/Month 2020/02

KeyNo.	Part Number	Part Name	Quantity	Other
1	FE21010000A	CLUTCH DISC	1	
2	FE21020000A	CLUTCH COVER ASSY	1	
3	26013-080162	Bolt, Hexa (8-16)	6	
4	22351-080016	PIN, SPRING (8-16)	3	

FIG T018 Branson 2100	18. CLUTCH ROD & RELEASE	Year/Month 2020/02

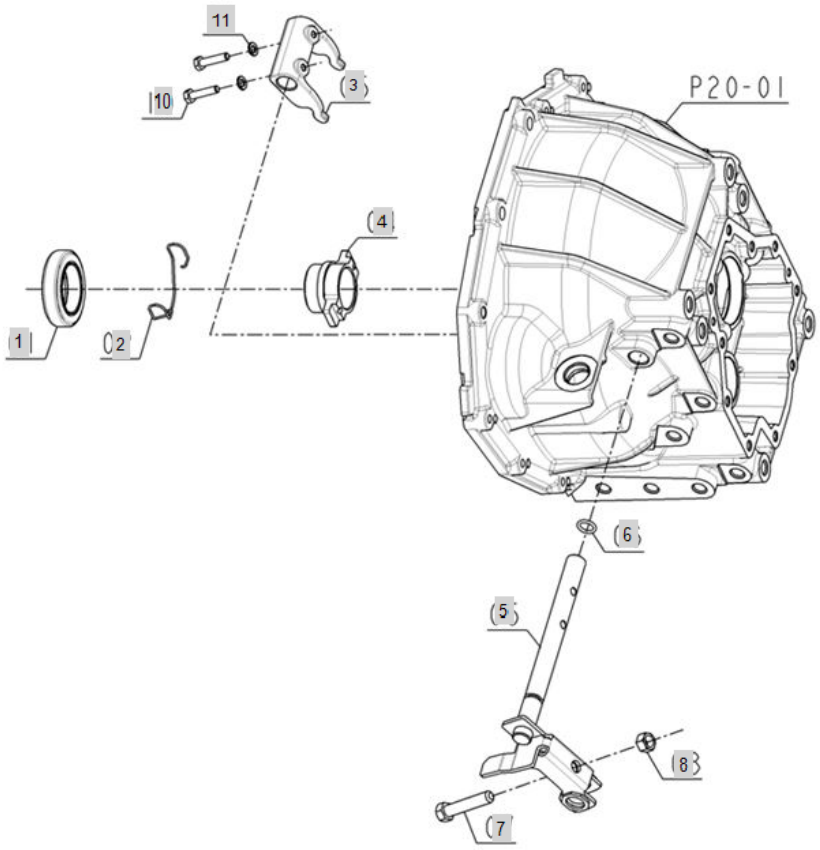

FIG T018 Branson 2100	18. CLUTCH ROD & RELEASE	Year/Month 2020/02

KeyNo.	Part Number	Part Name	Quantity	Other
1	FE22010000A	BEARING,RELEASE	1	
2	FE22020000A	HOLDER, BEARING	1	
3	TA00019426A	CLUTCH RELEASE FORK	1	
4	FE22040000A	SPRING,RELEASE	1	
5	FE22050000C	SHAFT, CLUTCH ROD	1	
6	24311-000120	O-RING, DYNAMIC (Φ12)	1	
7	26116-100504	HEXFLANGEBOLT	1	
8	26712-100002	HEX NUT	1	
10	TA00019440A	REAMER BOLT M6X28	2	
11	22217-060000	WASHER, SPRING (Φ 06)	2	

FIG T019 Branson 2100	19. CLUTCH PEDAL	Year/Month 2020/02

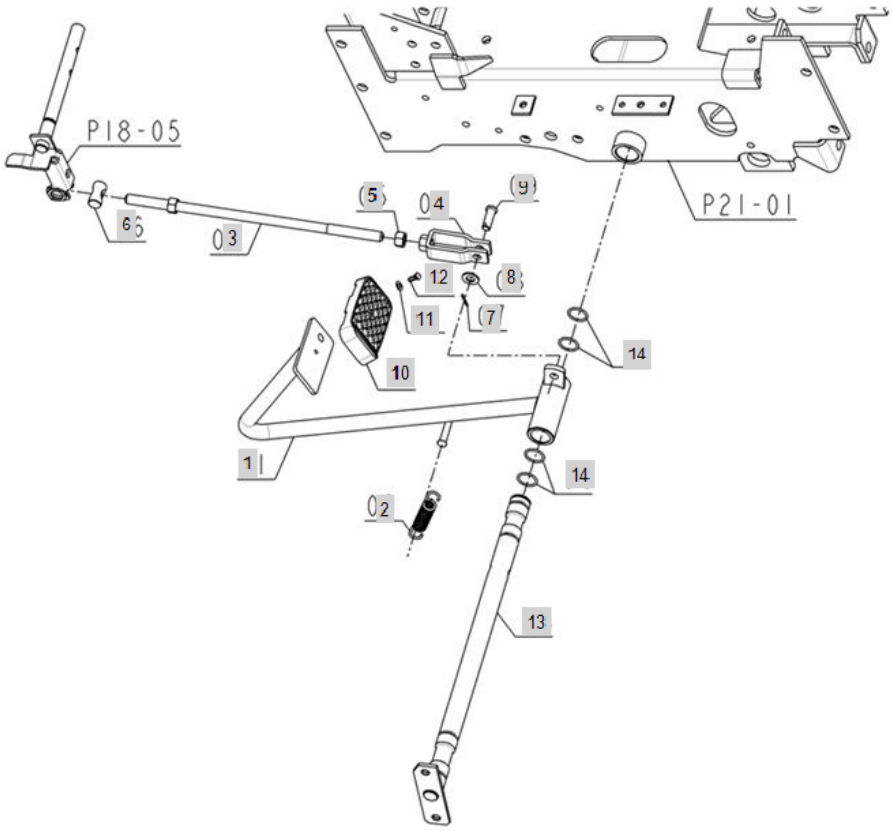

FIG T019 Branson 2100	19. CLUTCH PEDAL	Year/Month 2020/02

KeyNo.	Part Number	Part Name	Quantity	Other
1	FE23010000A	PEDAL,CLUTCH	1	
2	FE23030000A	SPRING,CLUTCH	1	
3	FE23050000A	CLUTCH ROD	1	
4	FE23060000A	U-JOINT	1	
5	TT67040000A4	NUT.LH	1	
6	FE23080000A	PIN	1	
7	22417-200160	PIN , COTTER (2-16)	1	
8	22127-100000	WASHER, PLAIN (Φ 10)	1	
9	22486-100240	PIN, FASTENER	1	
10	TC73050000A3	PEDALHEADCOVER	1	
11	TC73040000A4	WASHER(REVET)	1	
12	TC73030000A4	RIVET(PEDALHEAD)	1	
13	TA00017078A	Shaft, Pedal	1	
14	24311-000210	O-RING, DYNAMIC (Φ21)	4	

FIG T020-1 Branson 2100	20. CLUTCH HOUSING	Year/Month 2020/02

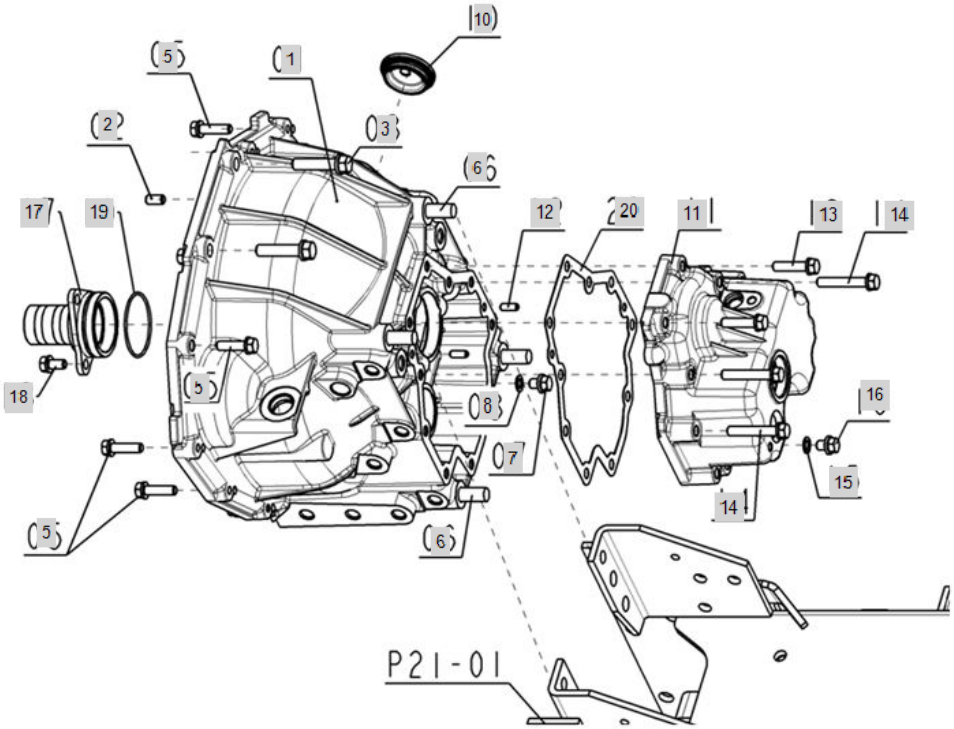

FIG T020-1 Branson 2100	20. CLUTCH HOUSING	Year/Month 2020/02

KeyNo.	Part Number	Part Name	Quantity	Other
1	FE24010000B	Housing, Clutch	1	
2	22312-080140	PIN, DOWEL (8-14)	2	
3	26013-100452	HEX BOLT W/WASHER	2	
4	26013-080452	SCREW,CAPTIVEWASHERCAP	2	
5	26013-080302	HEX BOLT W/WASHER	11	
6	26216-120252	STUD BOLT	4	
7	26116-080122	SCREW,HEXAGONHEADCAP	1	
8	23414-080000	WASHER, PLAIN (Φ8)	1	
10	FE24100000A	CAP,SEAL	1	
11	FE24110000B	COVER, CLUTCH HOUSING	1	
12	22312-060140	PIN, DOWEL (6-14)	2	
13	26013-080352	SCREW,CAPTIVEWASHERCAP	4	
14	26013-080502	Bolt, Hexa (8-50)	6	
15	23414-080000	WASHER, PLAIN (Φ8)	1	
16	26116-080162	SCREW,HEXAGONHEADCAP	1	
17	FE24170000A	Case, Bearing	1	
18	26013-080162	Bolt, Hexa (8-16)	3	
19	24341-000530	O-RING, FIX (Φ53)	1	
20	FE24200000A	PACKING,CLUTCH HOUSING	1	

FIG T020-2 Branson 2100	20. CLUTCH HOUSING	Year/Month 2020/02

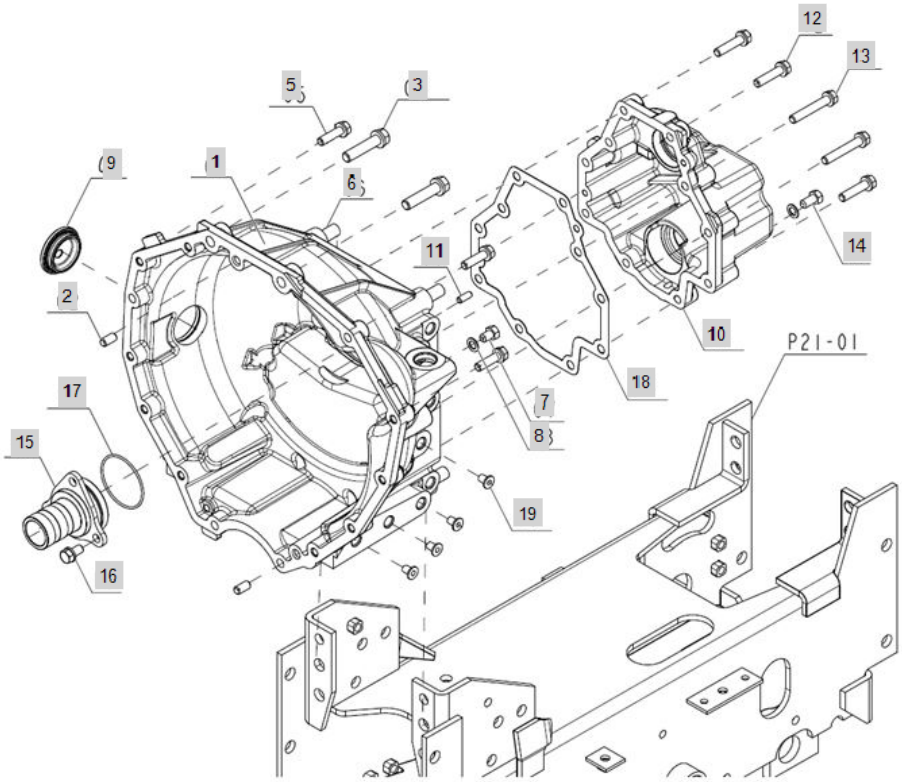

FIG T020-2 Branson 2100	20. CLUTCH HOUSING	Year/Month 2020/02

KeyNo.	Part Number	Part Name	Quantity	Other
1	FE24010000B	Housing, Clutch	1	
2	22312-080140	PIN, DOWEL (8-14)	2	
3	26013-100452	HEX BOLT W/WASHER	2	
4	26013-080452	SCREW,CAPTIVEWASHERCAP	2	
5	26013-080302	HEX BOLT W/WASHER	11	
6	26216-120252	STUD BOLT	4	
7	26116-080122	SCREW,HEXAGONHEADCAP	1	
8	23414-080000	WASHER, PLAIN (Φ8)	2	
9	FE24100000A	CAP,SEAL	1	
10	FE24110000B	COVER, CLUTCH HOUSING	1	
11	22312-060140	PIN, DOWEL (6-14)	2	
12	26013-080352	SCREW,CAPTIVEWASHERCAP	4	
13	26013-080502	Bolt, Hexa (8-50)	6	
14	26116-080162	SCREW,HEXAGONHEADCAP	1	
15	FE24170000A	Case, Bearing	1	
16	26013-080162	Bolt, Hexa (8-16)	3	
17	24341-000530	O-RING, FIX (Φ53)	1	
18	FE24200000A	PACKING,CLUTCH HOUSING	1	
19	TB26060000A4	PLUGRUBBER	8	

FIG T021-1 Branson 2100	21. CENTER FRAME	Year/Month 2020/02

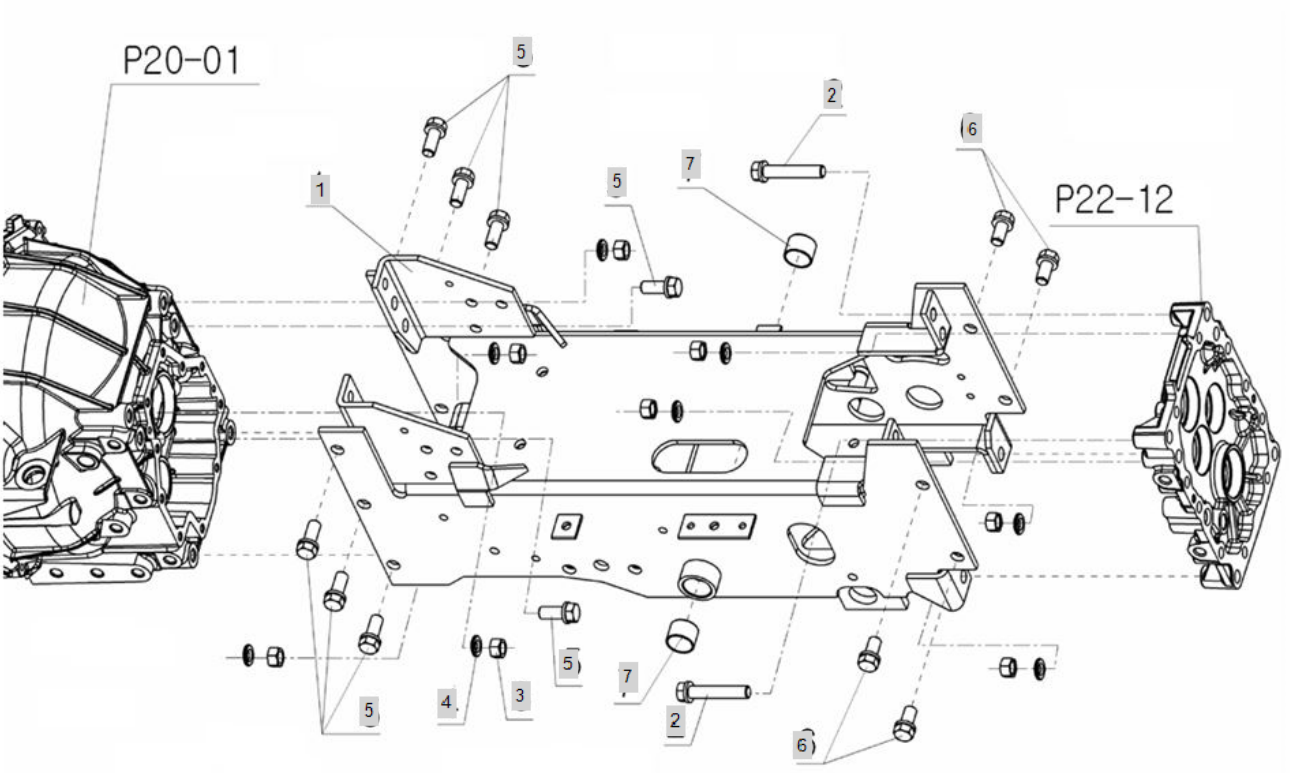

FIG T021-1 Branson 2100	21. CENTER FRAME	Year/Month 2020/02

KeyNo.	Part Number	Part Name	Quantity	Other
1	FE25010000F		1	
2	26013-120652	BOLT	2	
3	26716-120002	BOLT,CYLINDER HEAD(B)	8	
4	22217-120000	WASHER, SPRING (Φ 12)	8	
5	26013-120302	HEX BOLT W/WASHER	8	
6	26013-120252	SCREW,CAPTIVEWASHERCAP	4	
7	24550-025200	BUSH,DRY	2	

FIG T021-2 Branson 2100	21. CENTER FRAME	Year/Month 2020/02

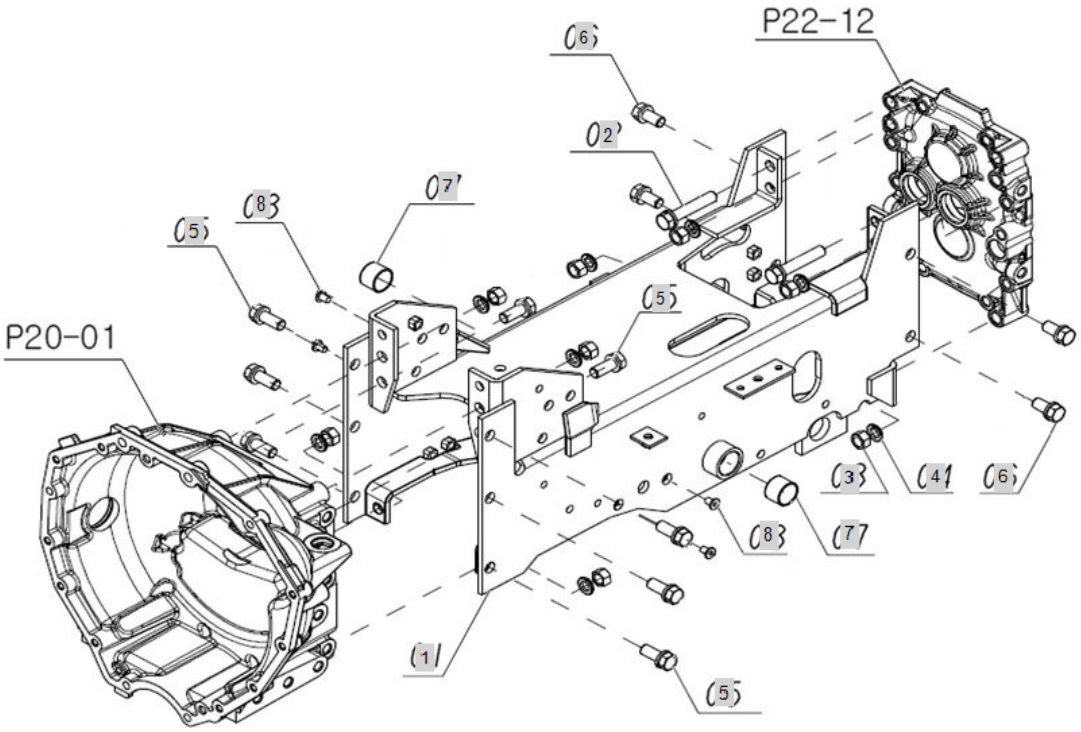

FIG T021-2 Branson 2100	21. CENTER FRAME	Year/Month 2020/02

KeyNo.	Part Number	Part Name	Quantity	Other
1	FE25010000F		1	
2	26013-120652	BOLT	2	
3	26716-120002	BOLT,CYLINDER HEAD(B)	8	
4	22217-120000	WASHER, SPRING (Φ 12)	8	
5	26013-120302	HEX BOLT W/WASHER	8	
6	26013-120252	SCREW,CAPTIVEWASHERCAP	4	
7	24550-025200	BUSH,DRY	2	
8	TB26060000A4	PLUGRUBBER	4	

FIG T022 Branson 2100	22. TRANSMISSION CASE	Year/Month 2020/02

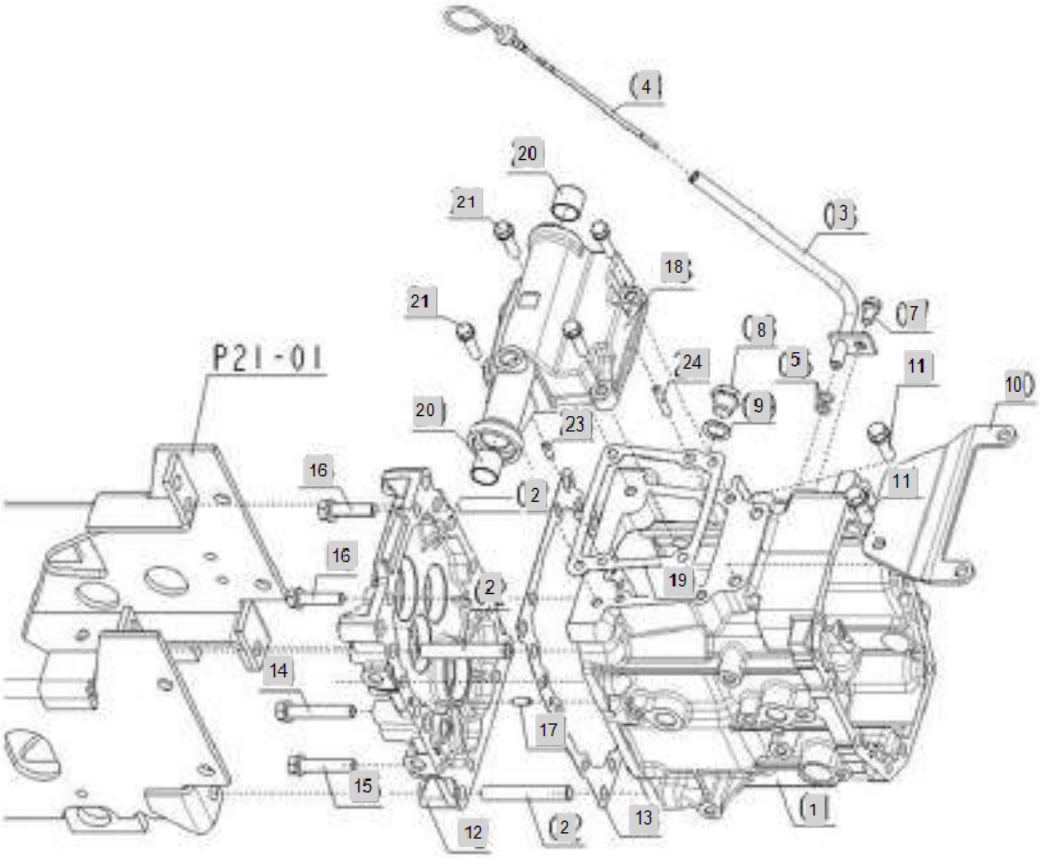

FIG T022 Branson 2100	22. TRANSMISSION CASE	Year/Month 2020/02

KeyNo.	Part Number	Part Name	Quantity	Other
1	TA00003027A	TRANSMISSION CASE (HST)	1	
2	26216-120602	STUD,BOLT	4	
3	FE27030000A	PIPE,OIL GAUGE	1	
4	FE27040000A	GAUGE,OIL	1	
5	24311-000100	O-RING, DYNAMIC (Φ10)	2	
7	26013-080162	Bolt, Hexa (8-16)	1	
8	23887-160002	PLUG	1	
9	23414-160000	WASHER,SEALING	1	
10	FE27100000A	BRACKET	1	
11	26013-100302	SCREW,CAPTIVEWASHERCAP	2	
12	TA00003024A	HOLDER,BEARING	1	
13	TA00016301A	BOLT	3	
14	22217-100000	WASHER, SPRING (Φ 10)	3	
15	TA00017200A	UPPER COVER (HST) ASSY	1	
16	26013-080202	Bolt, Hexa (8-20)	4	
17	FE27130000A	PACKING,FORNT COVER	1	
18	FE27180000A	PACKING,UP-COVER	1	
19	FE27180000A	PACKING,UP-COVER	1	
20	24550-020200	DRY BUSH (20X20)	2	
21	26013-080302	HEX BOLT W/WASHER	4	
23	22312-060140	PIN, DOWEL (6-14)	1	
24	22312-060320	PIN	1	

FIG T024 Branson 2100	24. DIFFERENTIAL GEAR CASE	Year/Month 2020/02

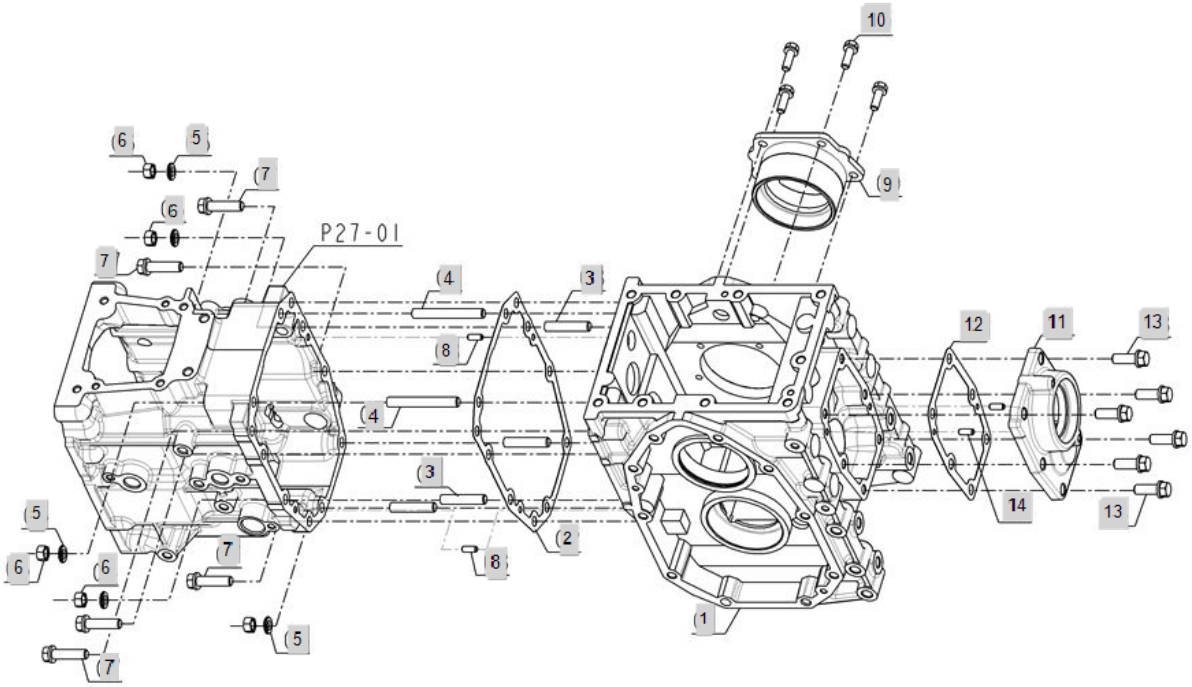

FIG T024 Branson 2100	24. DIFFERENTIAL GEAR CASE	Year/Month 2020/02

KeyNo.	Part Number	Part Name	Quantity	Other
1	FE29010000C	CASE, DIFF. GEAR	1	
2	FE29020000A	PACKING, CASE.DIFF.GEAR	1	
3	26216-100352	BOLT	4	
4	26216-100652	STUD,BOLT	2	
5	22217-100000	WASHER, SPRING (Φ 10)	6	
6	26716-100002	Nut, Hexa (Φ10)	6	
7	26013-100402	Bolt, Hexa (10-40)	5	
8	22312-060140	PIN, DOWEL (6-14)	2	
9	FE29080000A	HOLDER	1	
10	26013-080252	Bolt, Hexa (8-25)	4	
11	FE29100000A	COVER,REAR	1	
12	FE29110000A	PACKING,REAR COVER	1	
13	26013-100302	SCREW,CAPTIVEWASHERCAP	6	
14	22312-060140	PIN, DOWEL (6-14)	2	

FIG T025 Branson 2100	25. REAR CASE	Year/Month 2020/02

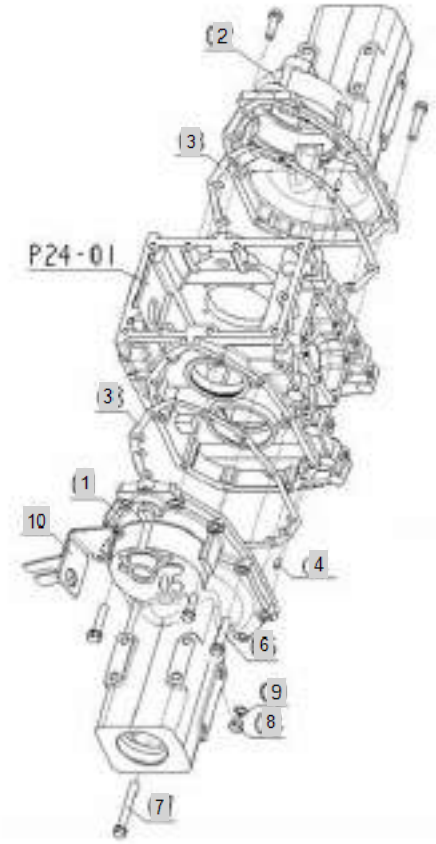

FIG T025 Branson 2100	25. REAR CASE	Year/Month 2020/02

KeyNo.	Part Number	Part Name	Quantity	Other
1	FE30010000A	CASE, AXLE LH	1	
2	FE30020000A	CASE, AXLE RH	1	
3	FE30030000A	PACKING, REAR AXLE CASE	2	
4	22312-060140	PIN, DOWEL (6-14)	4	
5	26013-100352	Bolt, Hexa (10-35)	8	
6	26013-100502	BOLT,W/SW	10	
7	26013-100802	HEX BOLT W/WASHER	2	
8	23887-120002	BOLT	2	
9	23414-120000	WASHER, PLAIN (Φ 12)	2	
10	FE30120000A	STAY NUETRAL SWITCH	1	

FIG T026 Branson 2100	26. CLUTCH SHAFT	Year/Month 2020/02

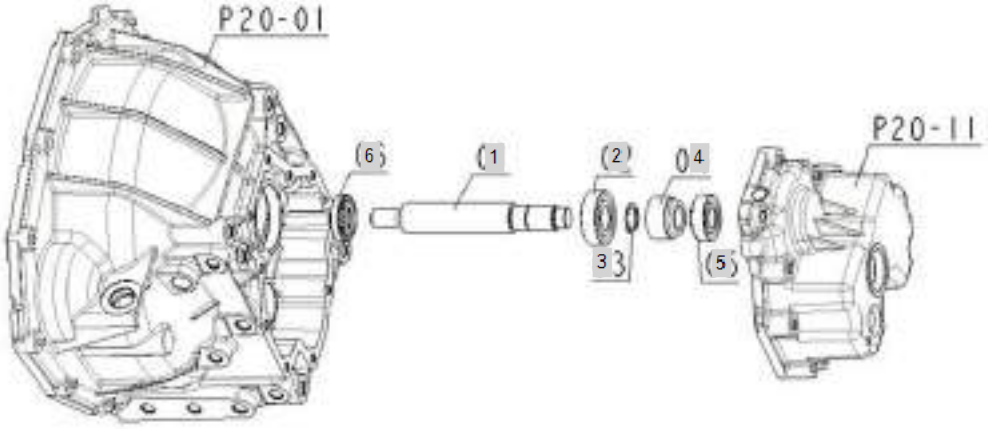

FIG T026 Branson 2100	26. CLUTCH SHAFT	Year/Month 2020/02

KeyNo.	Part Number	Part Name	Quantity	Other
1	FE31010000A	SHAFT,CLUTCH	1	
2	24101-062044	Bearing, Ball (#6204)	1	
2-1	TA00016550A	BALL BEARING	1	
3	22242-000200	SNAP RING, SHAFT (Φ 20)	1	
4	FE31040000A	GEAR, CLUTCH SHAFT	1	
5	24101-062034	Bearing, Ball (#6203)	1	
5-1	TA00016549A	BALL BEARING	1	
6	FE31060000A	OIL SEAL25*40*8	1	

FIG T027 Branson 2100	27. PROPELLER SHAFT	Year/Month 2020/02

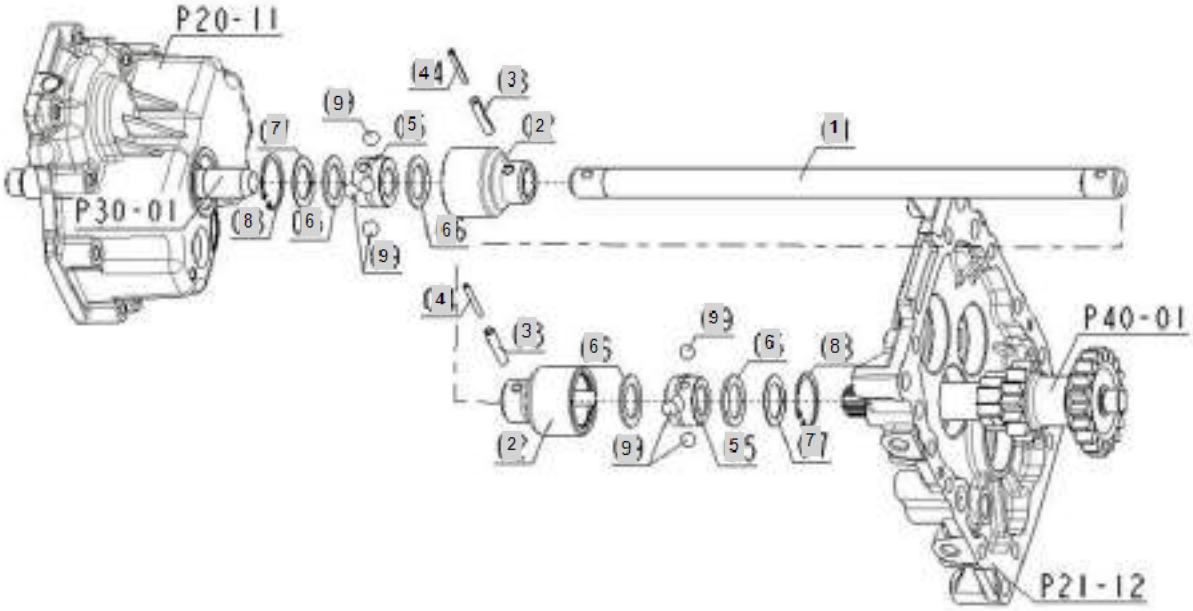

FIG T027 Branson 2100	27. PROPELLER SHAFT	Year/Month 2020/02

KeyNo.	Part Number	Part Name	Quantity	Other
1	FE32010000A	SHAFT, PROPELLER	1	
2	FE32020000A	COUPLING,BALL OUTER	2	
3	22351-060032	PIN, SPRING (6-32)	2	
4	22351-035032	PIN, SPRING (3.5-32)	2	
5	FE32050000A	COUPLING,BALL INNER	2	
6	FE32060000A	GASKET, BALL JOINT	4	
7	FE32070000A	SUPPORT,GASKET	2	
8	22252-000350	RING, CIRCLIP (Φ 35)	2	
9	24190-120001	STEELBALL	8	

FIG T030 Branson 2100	30. FRONT SHAFT	Year/Month 2020/02

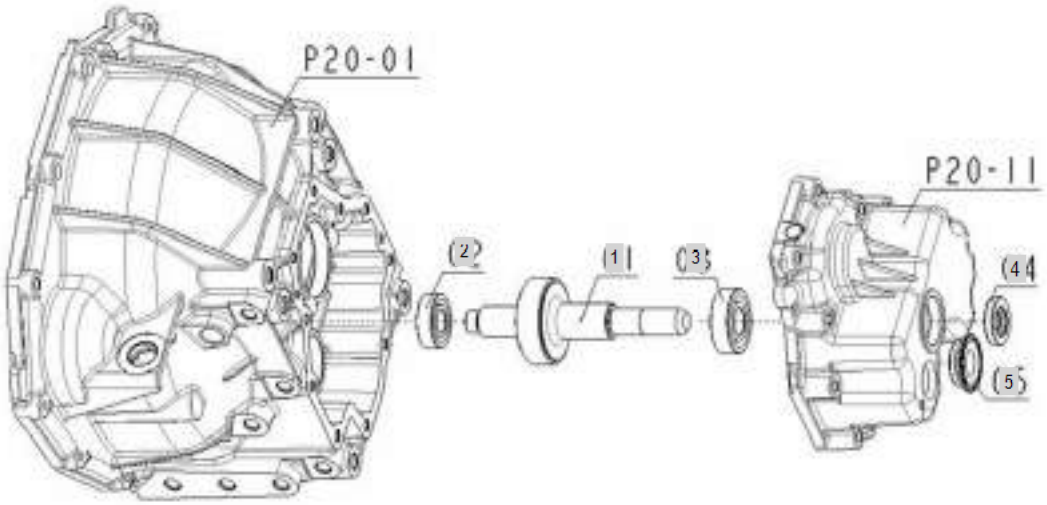

FIG T030 Branson 2100	30. FRONT SHAFT	Year/Month 2020/02

KeyNo.	Part Number	Part Name	Quantity	Other
1	FE35010000A	SHAFT, FRONT	1	
2	RR19170000A3	BEARING,BALL	1	
3	TA00016550A	BALL BEARING	1	
4	FE35040000A	OIL SEAL20*35*7	1	
5	FE35050000A	CAP, SEAL	1	

FIG T032-1 Branson 2100	32. PTO SHAFT	Year/Month 2020/02

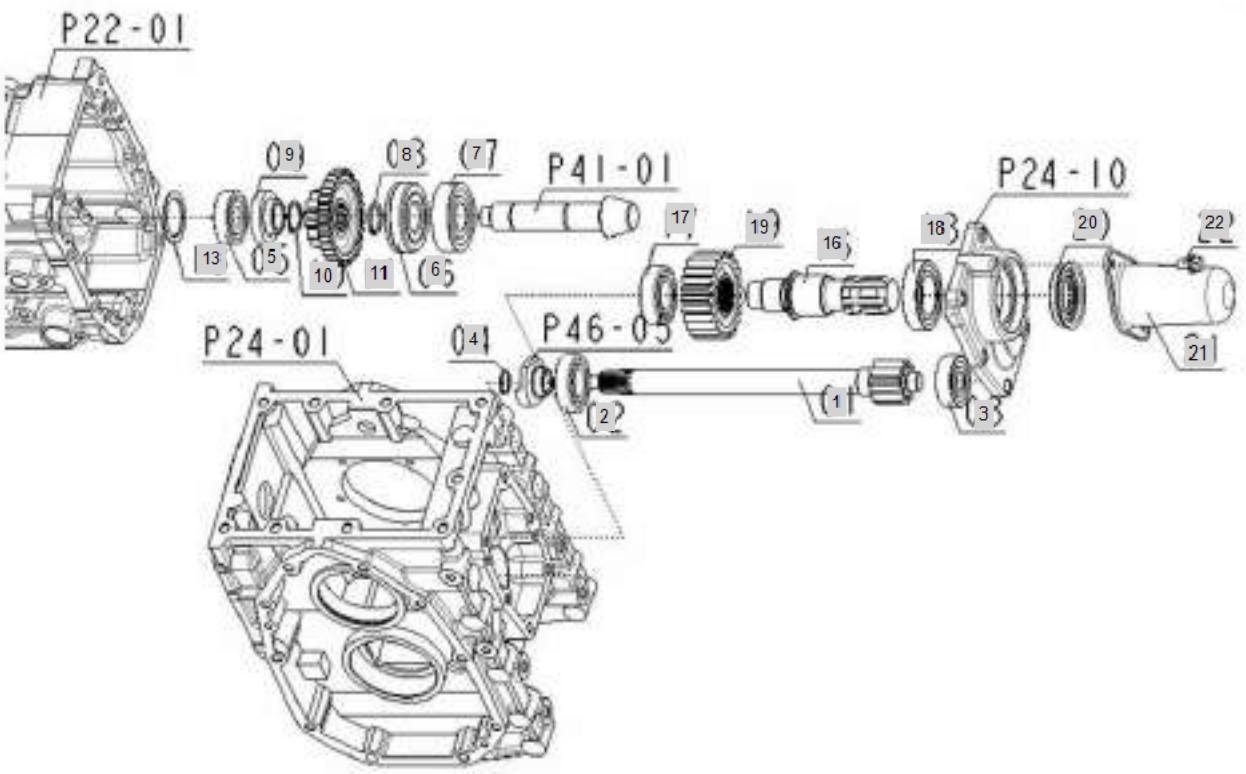

FIG T032-1 Branson 2100	32. PTO SHAFT	Year/Month 2020/02

KeyNo.	Part Number	Part Name	Quantity	Other
1	FE37010000A	GEAR SHAFT 11T	1	
2	TT58010000A4	BALL BEARING (6205HL)	1	
3	TA00016553A	BALL BEARING	1	
4	22242-000190	SNAP RING, SHAFT (Φ 19)	1	
5	24510-730320	BALLBEARING,ANGULAR	1	
6	24121-063054	BALLBEARING	1	
7	TA00016555A	BALL BEARING	1	
8	FE37080000B	CIR CLIP, EXTERNAL	1	
9	FE37090000A	GEAR,4WD(13)	1	
10	22242-000250	SNAP RING, SHAFT (Φ 25)	1	
11	TA00031467A	GEAR(12T-32T)	1	
13	FE37130000A	SHIM(1.4)	1	
16	FE37160000B	SHAFT, PTO	1	
17	TT58010000A4	BALL BEARING (6205HL)	1	
18	TA00016548A	BALL BEARING	1	
19	FE37190000A	GEAR 24T	1	
20	FE37200000A	OIL SEAL, PTO (35X55X9/10.5)	1	
21	TT80030000A3	P.T.OCOVER	1	
22	26014-080162	Bolt, Hexa (8-16)	2	

FIG T032-2 Branson 2100	32. PTO SHAFT	Year/Month 2020/02

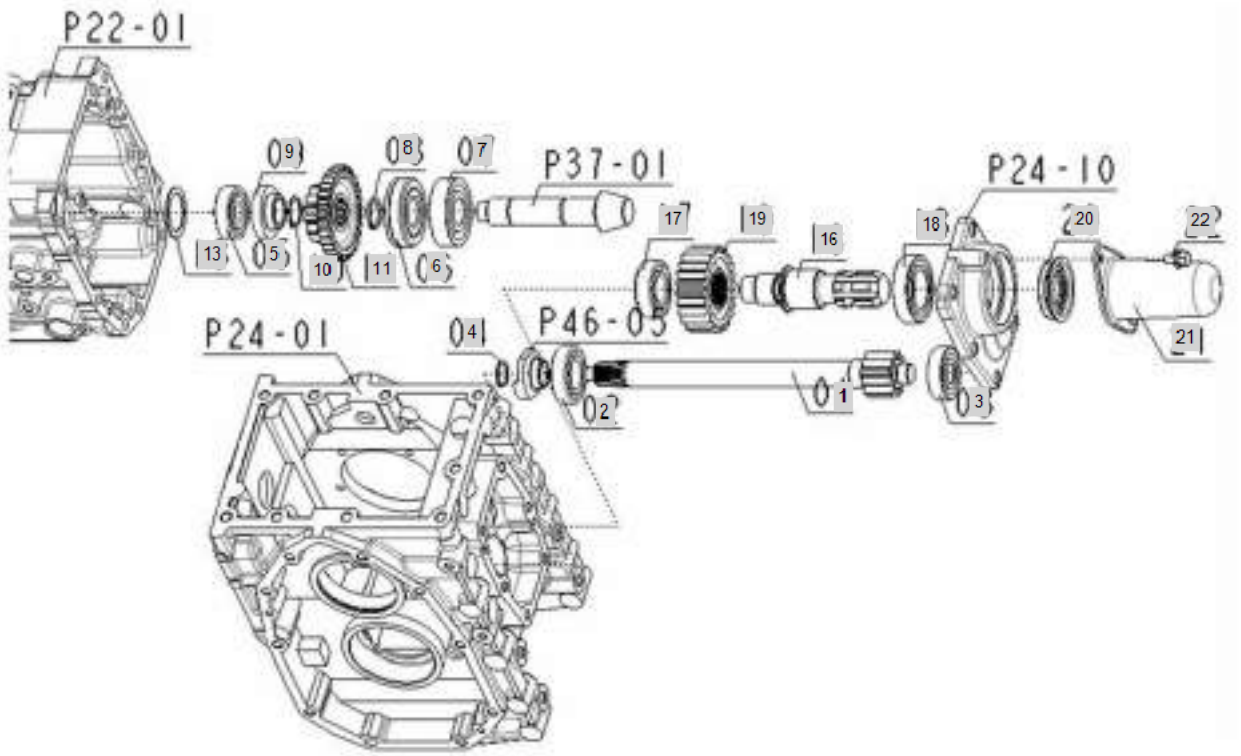

FIG T032-2 Branson 2100	32. PTO SHAFT	Year/Month 2020/02

KeyNo.	Part Number	Part Name	Quantity	Other
1	FE37010000A	GEAR SHAFT 11T	1	
2	TT58010000A4	BALL BEARING (6205HL)	1	
3	TA00016553A	BALL BEARING	1	
4	22242-000190	SNAP RING, SHAFT (Φ 19)	1	
5	24510-730320	BALLBEARING,ANGULAR	1	
6	24121-063054	BALLBEARING	1	
7	TA00016555A	BALL BEARING	1	
8	FE37080000B	CIR CLIP, EXTERNAL	1	
9	FE37090000A	GEAR,4WD(13)	1	
10	22242-000250	SNAP RING, SHAFT (Φ 25)	1	
11	TA00031467A	GEAR(12T-32T)	1	
13	FE37130000A	SHIM(1.4)	1	
16	FE37160000B	SHAFT, PTO	1	
17	TT58010000A4	BALL BEARING (6205HL)	1	
18	24101-060074	Bearing, Ball (#6007)	1	
19	FE37190000A	GEAR 24T	1	
20	FE37200000A	OIL SEAL, PTO (35X55X9/10.5)	1	
21	TT80030000A3	P.T.OCOVER	1	
22	26014-080162	Bolt, Hexa (8-16)	2	

FIG T034 Branson 2100	34. MID PTO	Year/Month 2020/02

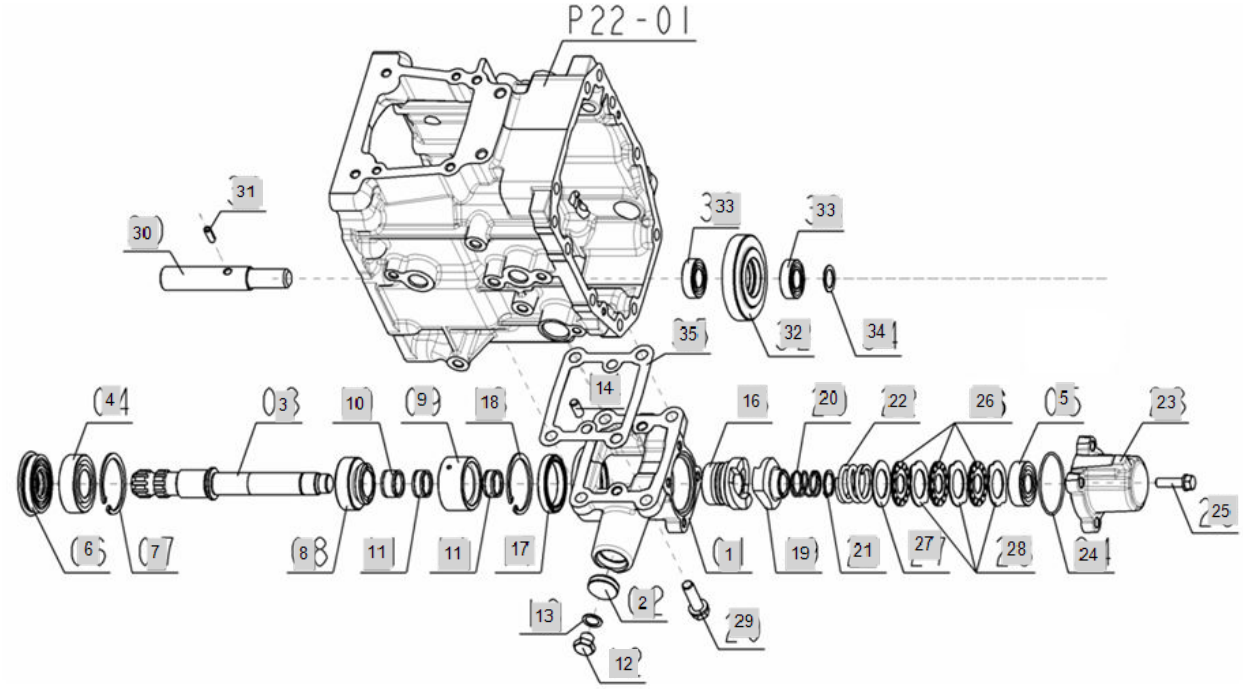

FIG T034 Branson 2100	34. MID PTO	Year/Month 2020/02

KeyNo.	Part Number	Part Name	Quantity	Other
1	FE39010000A	Case, PTO Middle	1	
2	FE39020000A	CAP,SEAL	1	
3	FE39030000A	SHAFT,MID PTO	1	
4	TA00000753A	BALL BEARING	1	
5	TA00016549A	BALL BEARING	1	
6	FE39060000A	Seal, Mid PTO Oil (25-52-9/11)	1	
7	22252-000520	RING, CIRCLIP (Φ 52)	1	
8	FE39080000A	GEAR 11T,MID PTO	1	
9	FE39090000A	COUPLING,MID PTO	1	
10	24161-202413	NEEDLE BEARING	1	
11	24161-202410	Bearing, Needle (20-24-10)	2	
12	23887-120002	BOLT	1	
13	23414-120000	WASHER, PLAIN (Φ 12)	1	
14	22312-080160	PIN, DOWEL (8-16)	2	
16	FE39160000A	Cam,One Way Clutch	1	
17	TA00016556A	BALL BEARING	1	
18	22252-000520	RING, CIRCLIP (Φ 52)	1	
19	FE46050000A	Cam,One Way Clutch	1	
20	FE39200000A	SPRING,MID PTO(INNER)	1	
21	22242-000200	SNAP RING, SHAFT (Φ 20)	1	
22	FE39220000A	SPRING,MID PTO(OUTER)	1	
23	FE39230000A	CASE,ONE WAY	1	
24	24341-000530	O-RING, FIX (Φ53)	1	
25	26013-080302	HEX BOLT W/WASHER	4	
26	FE39260000A	Disk, Clutch Friction	3	
27	FE39270000A	PLATE,FRICTION	1	
28	FE39280000A	Disk, Clutch Saperation	3	
29	26013-100352	Bolt, Hexa (10-35)	4	
30	FE39300000A	SHAFT,IDLE	1	
31	22351-060016	PIN, SPRING (6-16)	1	
32	FE39320000A	GEAR 19T,MID PTO	1	
33	CTC1040000A4	Bearing #6003	2	
34	FE39340000A	COLLAR,THRUST	1	
35	FE39350000A	PACKING,MID PTO CASE	1	

FIG T036 Branson 2100	36. MID PTO COVER	Year/Month 2020/02

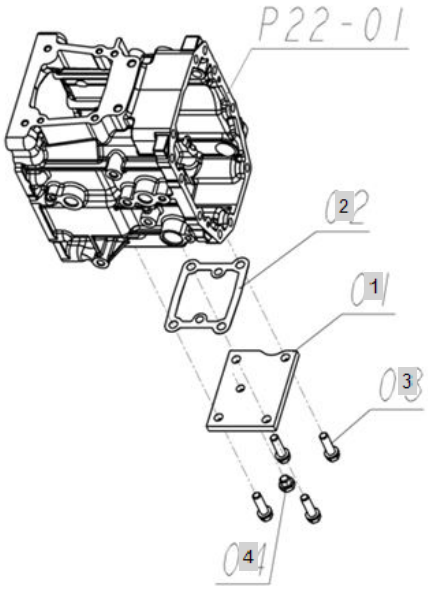

FIG T036 Branson 2100	36. MID PTO COVER	Year/Month 2020/02

KeyNo.	Part Number	Part Name	Quantity	Other
1	TA00018459A	MID PTO COER	1	
2	EA39350000A		1	
3	26013-100352	Bolt, Hexa (10-35)	4	
4	23887-120002	BOLT	1	
5	23414-120000	WASHER, PLAIN (Φ 12)	1	

FIG T037 Branson 2100	37. REAR DIFFERENTIAL	Year/Month 2020/02

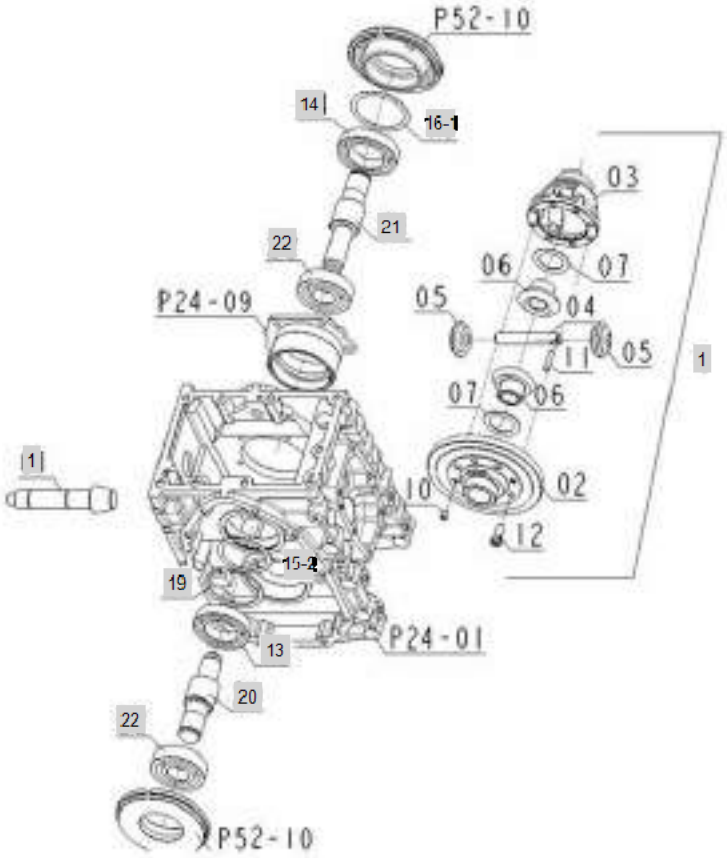

FIG T037 Branson 2100	37. REAR DIFFERENTIAL	Year/Month 2020/02

KeyNo.	Part Number	Part Name	Quantity	Other
1	FE41010000A	GEAR SUB ASS'Y, BEVEL	1	
1-1	FE41020100A	DRIVE PINION	1	
1-2	FE41020200A	RING GEAR	1	
1-3	FE41030000A	CASE,DIFFRENTIAL -> FE41010000A	1	
1-4	FE41040000B	SHAFT, DIFF. PINION	1	
1-5	FE41050000B	PINION, DIFF.	2	
1-6	FE41060000B	GEAR, DIFF. SIDE	2	
1-7	FE41070000A	SHIM1.0	2	
1-10	FE41100000A	PIN	1	
1-11	FE41110000A	PIN	1	
1-12	TC57080000A4	BOLT M8X22	6	
13	TA00000749A	BALL BEARING	1	
14	TA00000750A	BALL BEARING	1	
15-2	FE41160000A	SHIM, DIFF. SIDE	1	
15-3	TA00018029A	SHIM 0.1T	1	
16-1	FE41170000A	SHIM	1	
16-2	FE41180000A	SHIM, DIFF. SIDE	1	
19	22252-000750	RING, CIRCLIP (Φ 75)	1	
20	FE41200000A	SHAFT(L),DEFFENTIAL GEAR	1	
21	FE41210000A	SHAFT(R),DIFFERENTIAL GEAR	1	
22	TA00000760A	BALL BEARING	2	

FIG T038 Branson 2100	38. FRONT WHEEL PROPELLER SHAFT	Year/Month 2020/02

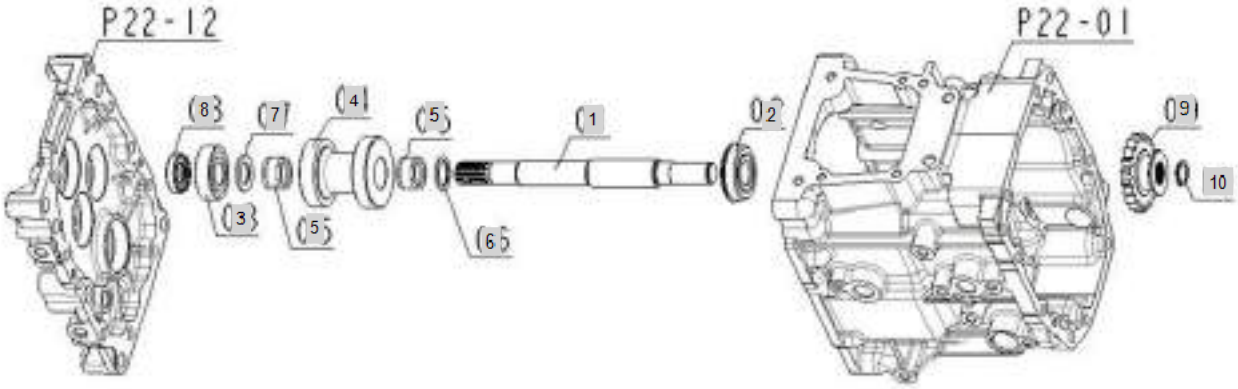

FIG T038 Branson 2100	38. FRONT WHEEL PROPELLER SHAFT	Year/Month 2020/02

KeyNo.	Part Number	Part Name	Quantity	Other
1	FE42010000B	SHAFT, 4WD	1	
2	24121-062044	BEARING	1	
3	TA00016550A	BALL BEARING	1	
4	FE42040000B	GEAR,REAR(16-20)	1	
5	24161-222817	NEEDLE BEARING	2	
6	FE42060000B	COLLAR	1	
7	FE42070000A	COLLAR	1	
8	FE42080000A	SEAL,OIL	1	
9	FE42090000A	GEAR,4WD(20)	1	
10	22242-000190	SNAP RING, SHAFT (Φ 19)	1	

FIG T040 Branson 2100	40. 2ND SHAFT	Year/Month 2020/02

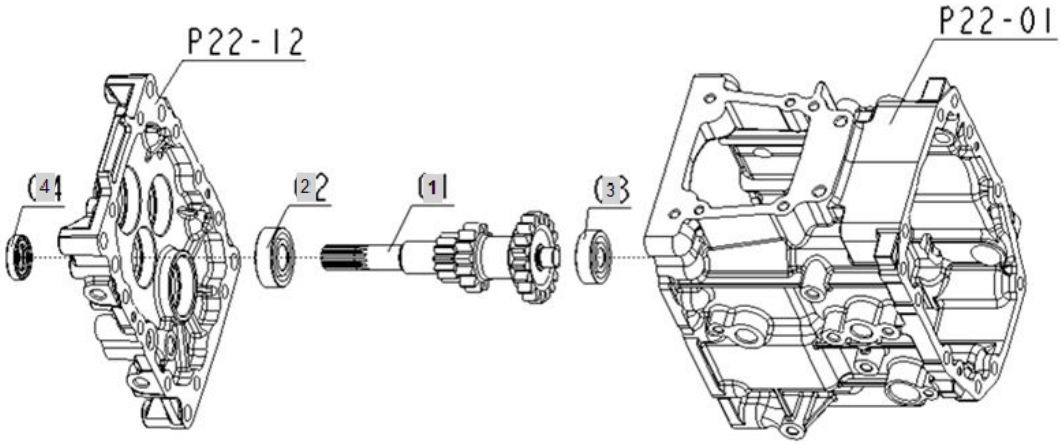

FIG T040 Branson 2100	40. 2ND SHAFT	Year/Month 2020/02

KeyNo.	Part Number	Part Name	Quantity	Other
1	FE44010000A	GEAR(13-13-18)	1	
2	TA00016550A	BALL BEARING	1	
3	TA00016552A	BALL BEARING	1	
4	FE42080000A	SEAL,OIL	1	

FIG T042 Branson 2100	42. 3RD.SHAFT	Year/Month 2020/02

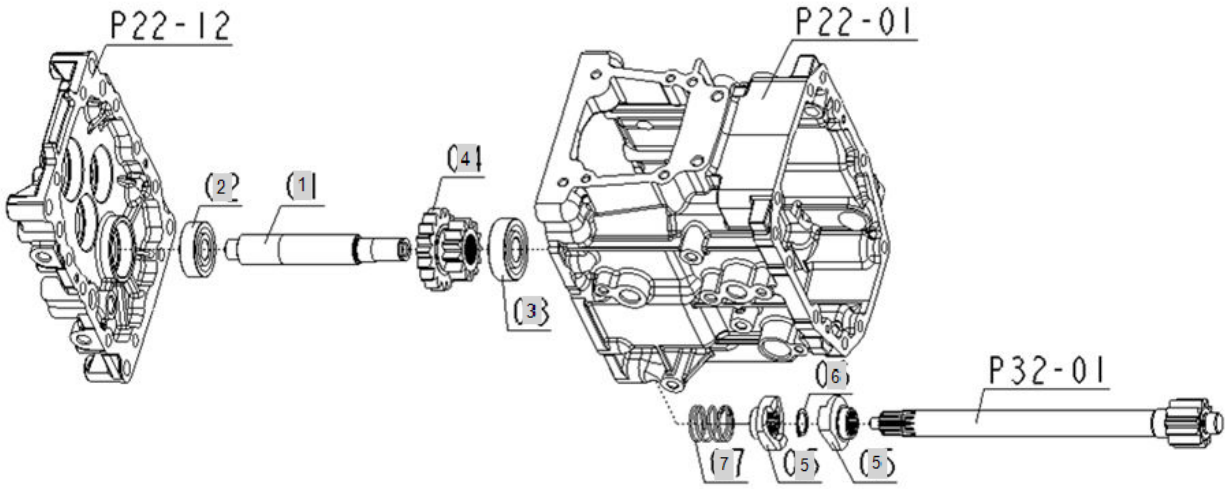

FIG T042 Branson 2100	42. 3RD.SHAFT	Year/Month 2020/02

KeyNo.	Part Number	Part Name	Quantity	Other
1	FE46010000A	SHAFT	1	
2	TA00016553A	BALL BEARING	1	
3	TA00016554A	BALL BEARING	1	
4	FE46040000B	GEAR(17-13)	1	
5	FE46050000A	Cam,One Way Clutch	2	
6	22242-000190	SNAP RING, SHAFT (Φ 19)	1	
7	FE46070000A	SPRING, ONE WAY CLUTCH	1	

FIG T044 Branson 2100	44. 4TH. SHAFT	Year/Month 2020/02

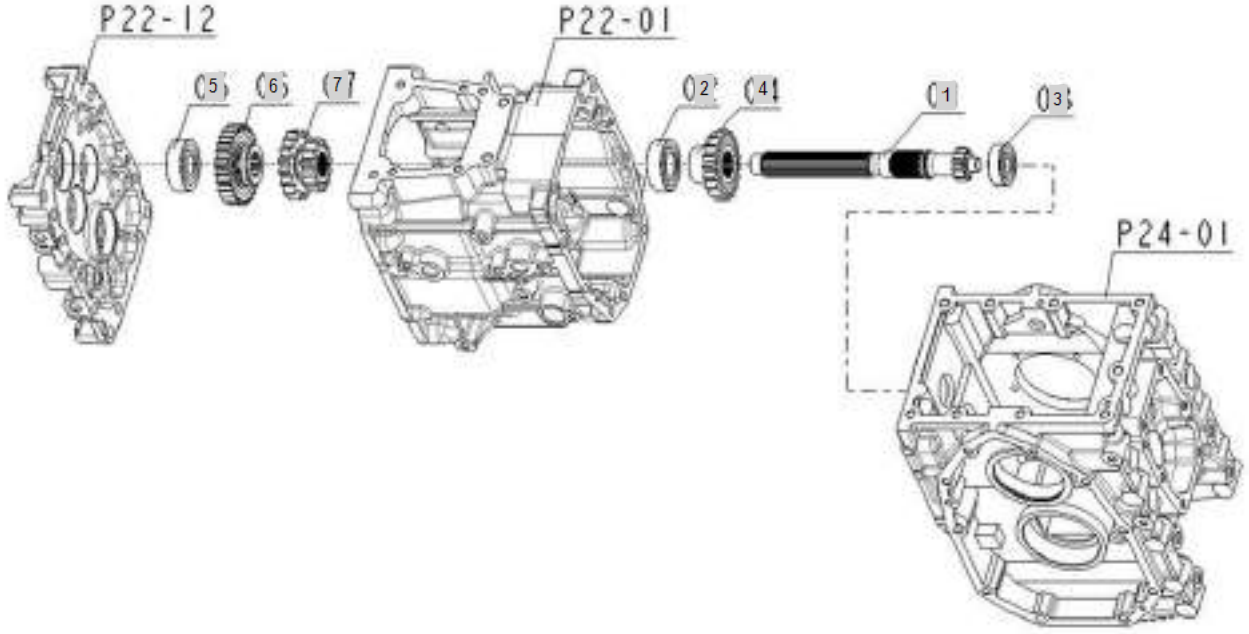

FIG T044 Branson 2100	44. 4TH. SHAFT	Year/Month 2020/02

KeyNo.	Part Number	Part Name	Quantity	Other
1	FE48010000A	Shaft, 4 Stage	1	
2	TA00000753A	BALL BEARING	1	
3	TT72040000A4	BEARING	1	
4	TA00031466A	GEAR(22T)	1	
5	TA00016554A	BALL BEARING	1	
6	FE48060000B	Gear, 4th Shaft 30T	1	
7	FE48070000A	Gear, 4th Shaft 17T-13T	1	

FIG T046 Branson 2100	46. MAIN GEAR SHIFT FORK	Year/Month 2020/02

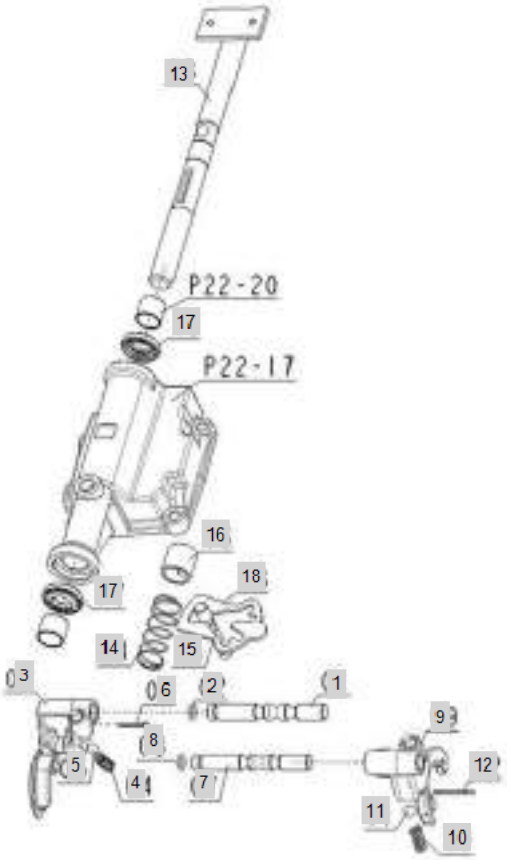

FIG T046 Branson 2100	46. MAIN GEAR SHIFT FORK	Year/Month 2020/02

KeyNo.	Part Number	Part Name	Quantity	Other
1	FE50010000A	Rod, Main Gear Shift Fork	1	
2	24311-240100	SEAL, O-RING	1	
3	FE50030000B	FORK, BACK SHIFT	1	
4	FE50040000A	SPRING	1	
5	24190-120001	STEELBALL	1	
6	22417-300220	PIN , COTTER (3-22)	1	
7	FE50010000A	Rod, Main Gear Shift Fork	1	
8	24311-240100	SEAL, O-RING	1	
9	FE50090000B	FORK, MAIN SHIFT	1	
10	FE50040000A	SPRING	1	
11	24190-120001	STEELBALL	1	
12	22417-300300	PIN , COTTER (3-30)	1	
13	FE50130000A	SHAFT	1	
14	FE50140000A	SPRING,RETURN	1	
15	FE50150000A	ARM,MAIN SHIFT	1	
16	FE50160000A	COLLAR	1	
17	FE50170000A	SEAL,OIL	2	
18	FE50180000A	PLATE,SHIFT GUIDE	1	

FIG T047 Branson 2100	47. RANGE GEAR SHIFT FORK	Year/Month 2020/02

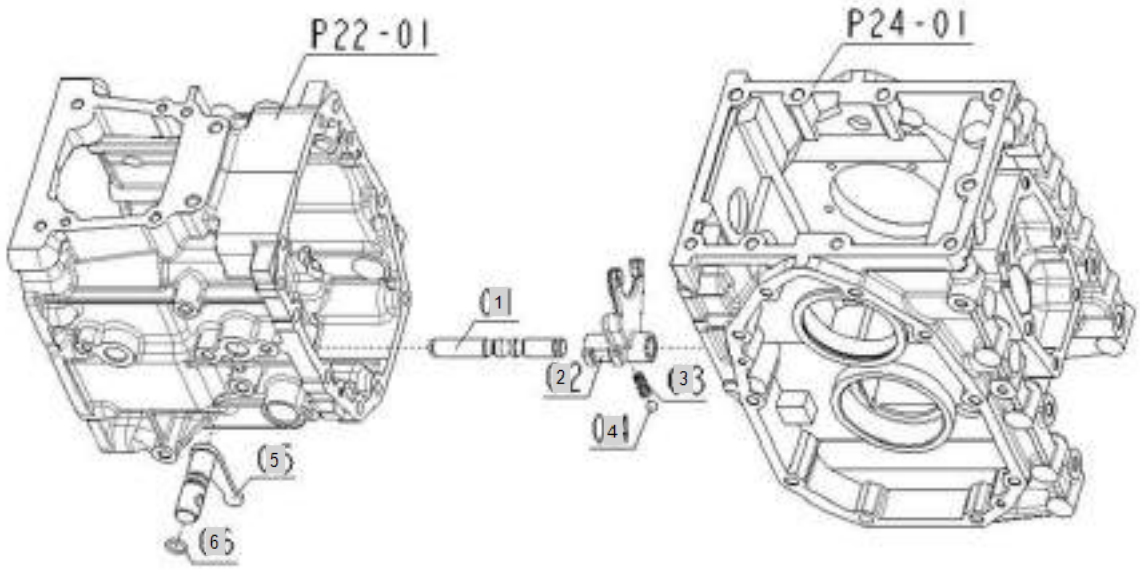

FIG T047 Branson 2100	47. RANGE GEAR SHIFT FORK	Year/Month 2020/02

KeyNo.	Part Number	Part Name	Quantity	Other
1	FE51010000A	Rod, Main Gear Shift Fork	1	
2	FE51020000B	FORK, Range Gear Shift	1	
3	FE51030000B	SPRING	1	
4	24190-100001	Ball, Steel (5/16)	1	
5	FE51050000B	ARM, RANGE SHIFT	1	
6	24311-000125	O-RING, DYNAMIC (Φ12.5)	1	

FIG T048 Branson 2100	48. PTO GEAR SHIFT FORK	Year/Month 2020/02

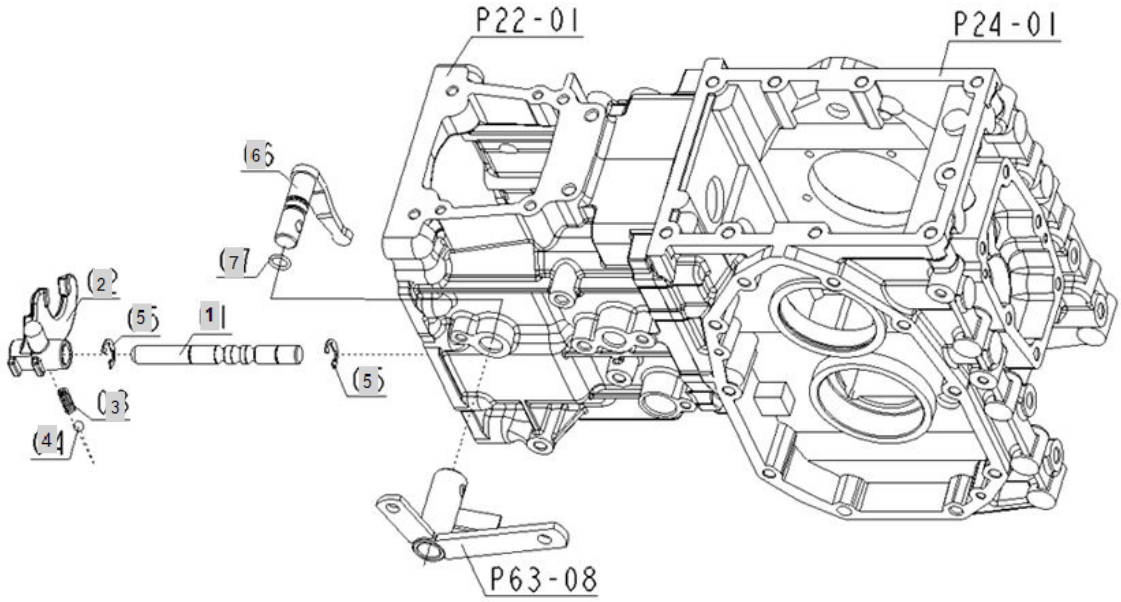

FIG T048 Branson 2100	48. PTO GEAR SHIFT FORK	Year/Month 2020/02

KeyNo.	Part Number	Part Name	Quantity	Other
1	FE53010000A	ROD,FORK	1	
2	FE53020000A	FORK,PTO SHIFT	1	
3	FE51030000B	SPRING	1	
4	24190-100001	Ball, Steel (5/16)	1	
5	22272-000120	RING, CIRCLIP (Φ 12)	2	
6	FE53060000A	ARM,PTO SHIFT	1	
7	24311-000125	O-RING, DYNAMIC (Φ12.5)	1	

FIG T050 Branson 2100	50. DIFFERENTIAL LOCK SHIFT FORK	Year/Month 2020/02

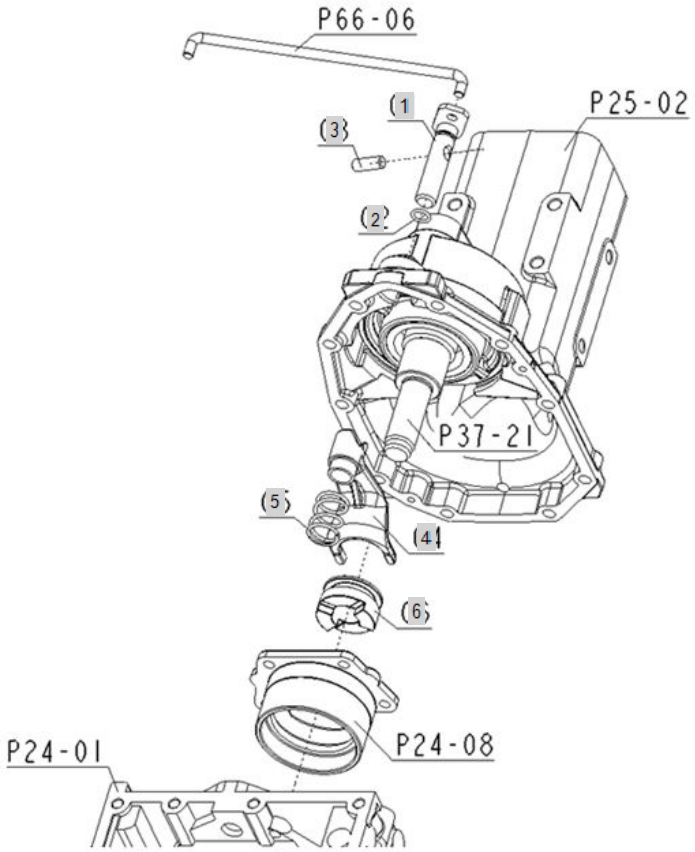

FIG T050 Branson 2100	50. DIFFERENTIAL LOCK SHIFT FORK	Year/Month 2020/02

KeyNo.	Part Number	Part Name	Quantity	Other
1	FE55010000B	ROD, FORK	1	
2	24311-000125	O-RING, DYNAMIC (Φ12.5)	1	
3	22312-100250	PIN, DOWEL (10-25)	1	
4	FE55040000B	FORK, DIFF. LOCK SHIFT	1	
5	FE55050000A	Spring, Differntial Lock Shift Fork	1	
6	FE55060000A	Clutch, Differntial Lock Shift	1	

FIG T051 Branson 2100	51. REAR AXLE	Year/Month 2020/02

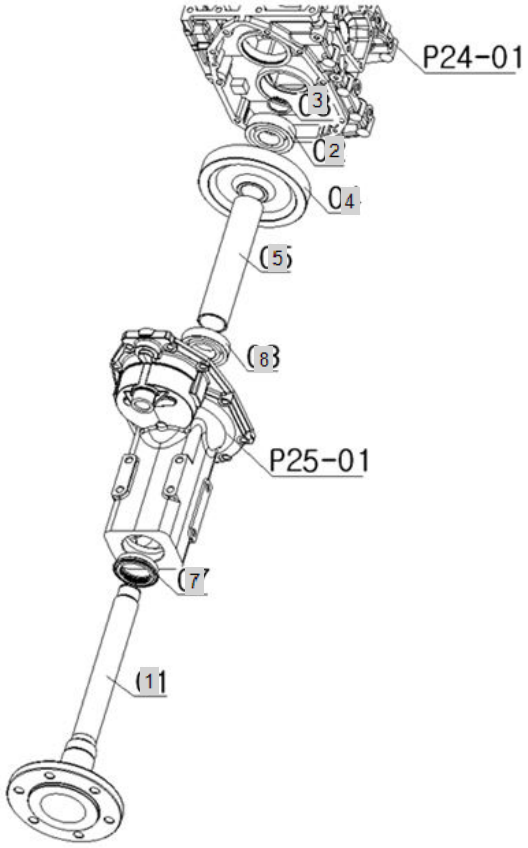

FIG T051 Branson 2100	51. REAR AXLE	Year/Month 2020/02

KeyNo.	Part Number	Part Name	Quantity	Other
1	FE56010000A	AXLE, REAR	2	
2	TA00000761A	BALL BEARING	2	
3	22242-000350	SNAP RING, SHAFT (Φ 35)	2	
4	FE56040000A	GEAR(57)	2	
5	FE56050000A	COLLAR 152	2	
7	FE56070000A	SEAL,OIL	2	
8	TA00000755A	BALL BEARING	2	

FIG T052 Branson 2100	52. BRAKE	Year/Month 2020/02

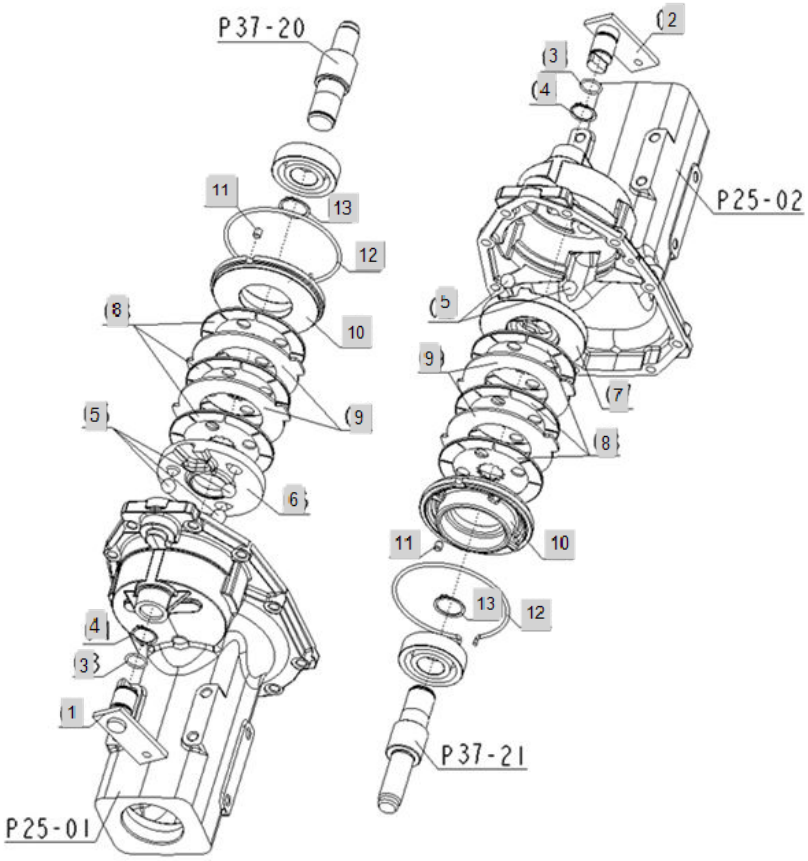

FIG T052 Branson 2100	52. BRAKE	Year/Month 2020/02

KeyNo.	Part Number	Part Name	Quantity	Other
1	FE57010000A	LEVER(L),BRAKE CAM	1	
2	FE57020000A	LEVER(R),BRAKE CAM	1	
3	24311-000210	O-RING, DYNAMIC (Φ21)	2	
4	22242-000250	SNAP RING, SHAFT (Φ 25)	2	
5	24190-200001	Ball, Steel	6	
6	FE57060000A	ACTUATOR(L)	1	
7	FE57070000A	ACTUATOR...	1	
8	FE57080000A	Plate, Brake Friction	6	
9	FE57090000A	Plate, Brake Iron	4	
10	FE57100000A	HOLDER,BEARING	2	
11	FE57110000A	PIN	2	
12	FE57120000A	CLIP	2	
13	22242-000300	SNAP RING, SHAFT (Φ 30)	2	

FIG T053 Branson 2100	53. BRAKE ROD	Year/Month 2020/02

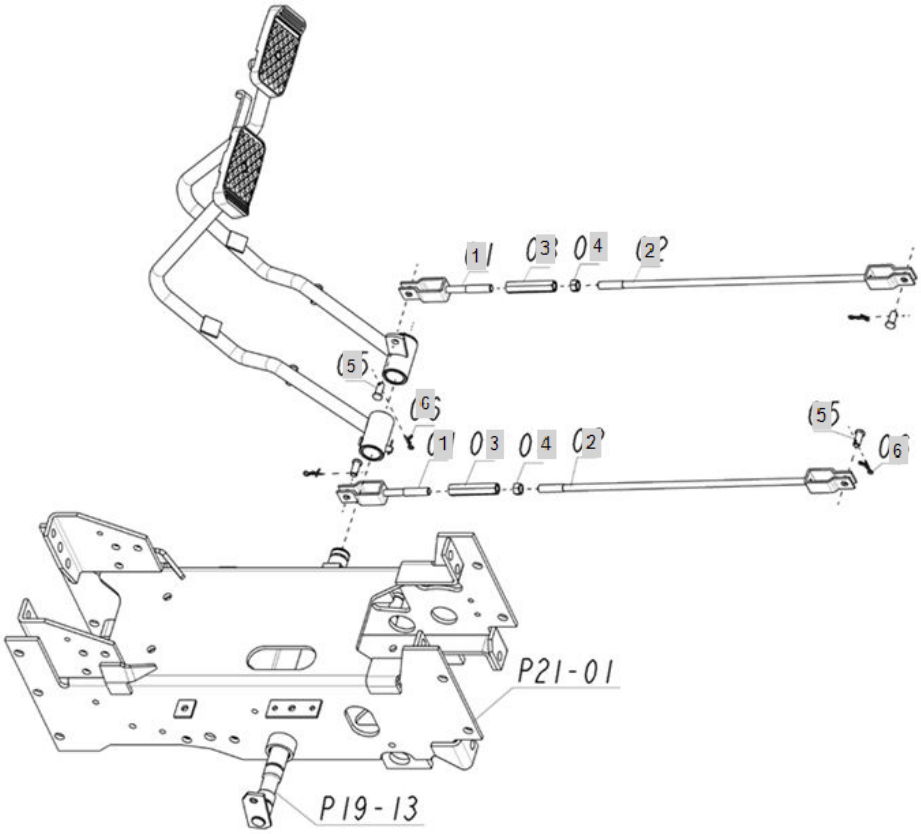

FIG T053 Branson 2100	53. BRAKE ROD	Year/Month 2020/02

KeyNo.	Part Number	Part Name	Quantity	Other
1	FE59010000A	BRAKE ROD, FRONT	2	
2	FE59020000B	BRAKE ROD, REAR	2	
3	TC73080300A4	TURN BUCKLE, 10X70	2	
4	26716-100002	Nut, Hexa (Φ10)	2	
5	TT83010000A4	TURN BUCKLE, 10X70	4	
6	RR64050000A4	Pin, Come-Off Snap (Φ8)	4	

FIG T054 Branson 2100	54. BRAKE PEDAL	Year/Month 2020/02

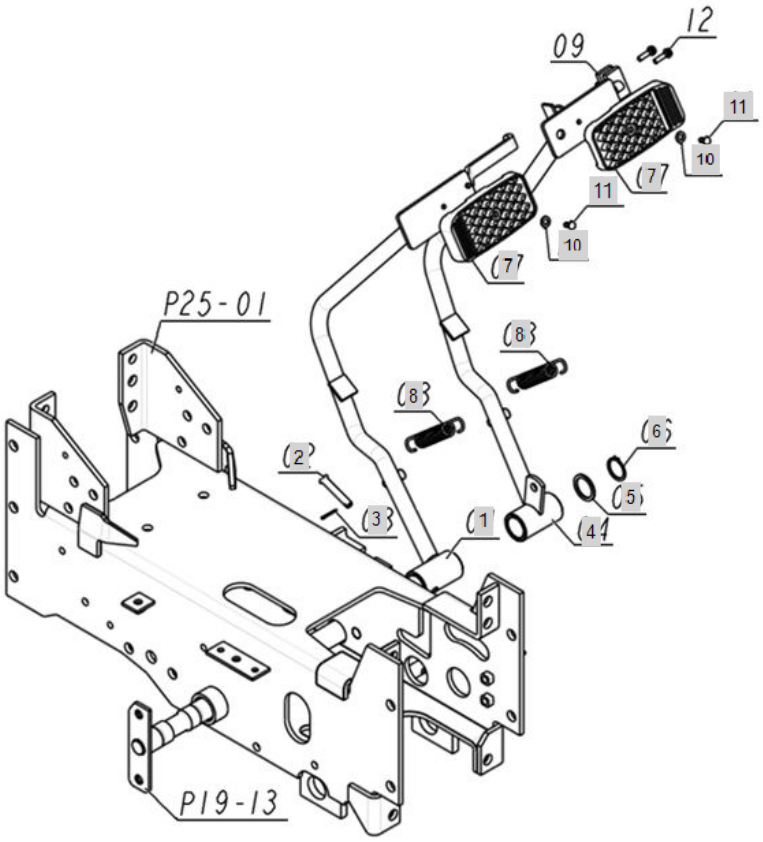

FIG T054 Branson 2100	54. BRAKE PEDAL	Year/Month 2020/02

KeyNo.	Part Number	Part Name	Quantity	Other
1	FE71010000E		1	
2	22487-080400	PIN 8X40	1	
3	22417-200180	PIN , COTTER (2-18)	1	
4	FE71040000E		1	
5	FE71050000A	COLLER	1	
6	22242-000240	SNAP RING, SHAFT (Φ 24)	1	
7	TC73050000A3	PEDALHEADCOVER	2	
8	FE23040000A	SPRING, BRAKE RETURN	2	
10	TC73040000A4	WASHER(REVET)	2	
11	TC73030000A	SUB TO-> TC73030000A4	2	

FIG T055 Branson 2100	55. BRAKE SWITCH	Year/Month 2020/02

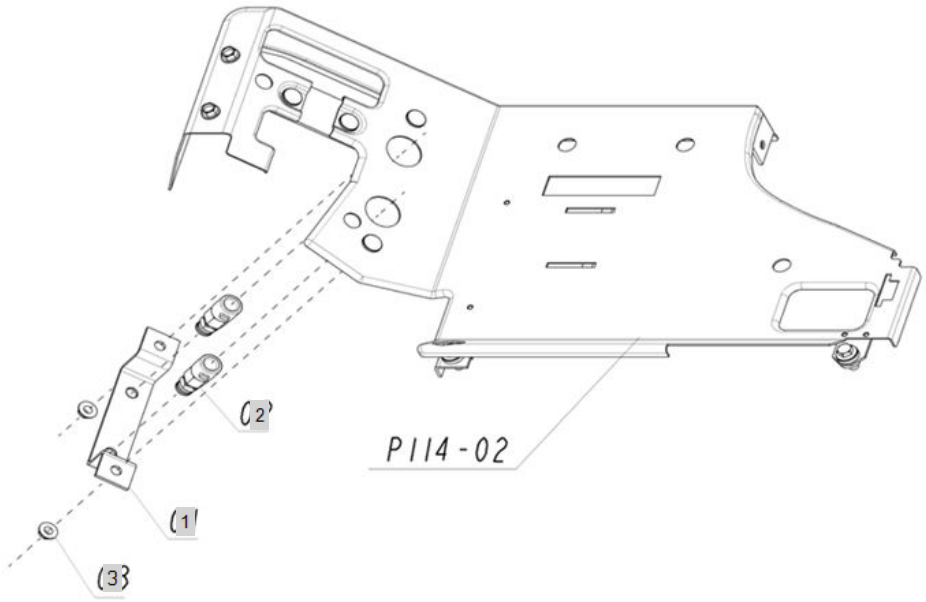

FIG T055 Branson 2100	55. BRAKE SWITCH	Year/Month 2020/02

KeyNo.	Part Number	Part Name	Quantity	Other
1	TA00016905B	BRAKET SWITCH	1	
2	TZC5110000A3	STOPLAMPSWITCH	2	
3	26366-080002	Nut, Hexa (Φ8)	2	

FIG T056 Branson 2100	56. SIDE BRAKE	Year/Month 2020/02

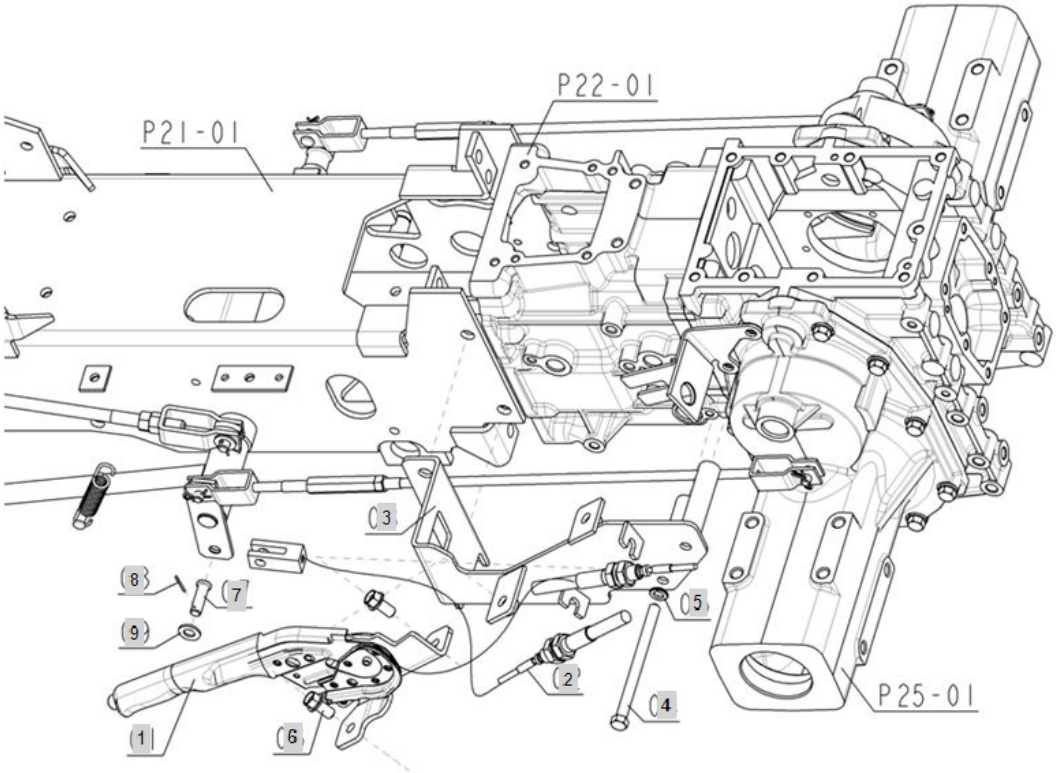

FIG T056 Branson 2100	56. SIDE BRAKE	Year/Month 2020/02

KeyNo.	Part Number	Part Name	Quantity	Other
1	TA00001403A	PARKING BRAKE	1	
2	TA00017080A	PARKING BRAKE WIRE	1	
3	TA00016435C	PARKING BRAKE BRAKET ASSY	1	
4	26116-101352	BOLT	2	
5	22217-100000	WASHER, SPRING (Φ 10)	2	
6	26106-100202	HEX BOLT, (10-20)	2	
7	22486-100280	PIN, FLAT HEAD	1	
8	22417-200160	PIN , COTTER (2-16)	1	
9	22127-100000	WASHER, PLAIN (Φ 10)	1	

FIG T057 Branson 2100	57. MAIN GEAR SHIFT LEVER	Year/Month 2020/02

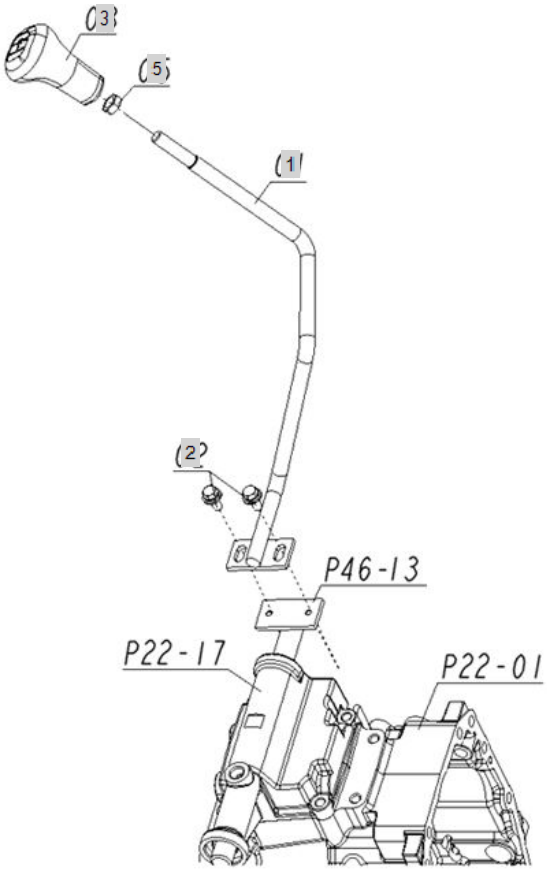

FIG T057 Branson 2100	57. MAIN GEAR SHIFT LEVER	Year/Month 2020/02

KeyNo.	Part Number	Part Name	Quantity	Other
1	FE64010000B	LEVER, MAIN GEAR SHIFT	1	
2	26014-080202	Bolt, Hexa (8-20)	2	
3	FE64030000A	KNOB, MAIN SHIFT (00 SERIES)	1	
5	26756-120002	LOCKNUTM12PLATED	1	

FIG T061 Branson 2100	61. RANGE GEAR SHIFT LEVER	Year/Month 2020/02

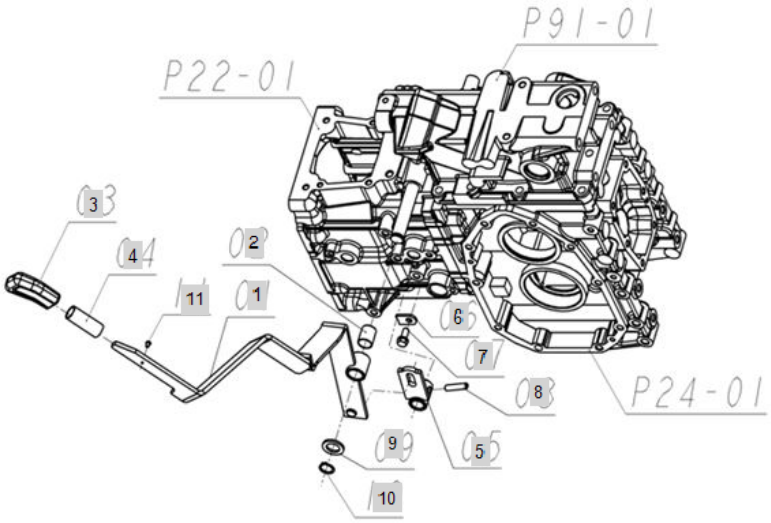

FIG T061 Branson 2100	61. RANGE GEAR SHIFT LEVER	Year/Month 2020/02

KeyNo.	Part Number	Part Name	Quantity	Other
1	FE67010000D	LEVER, RANGE SHIFT	1	
2	24550-018250	DRYBUSH	1	
3	TA00017708A	KNOB(RED)	1	
4	TA00016636A	LEVER HOSE 16X60	1	
5	FE67050000B	LEVER,SHIFT ARM	1	
6	RN41050000A4	PLATE, KEEP	1	
7	26013-080202	Bolt, Hexa (8-20)	1	
8	22351-080032	PIN, SPRING (8-32)	1	
9	22117-180000	WASHER, PLAIN (Φ 18)	1	
10	22242-000180	SNAP RING, SHAFT (Φ 18)	1	
11	26557-040062	SCREW	1	

FIG T062 Branson 2100	62. FRONT WHEEL DRIVE LEVER	Year/Month 2020/02

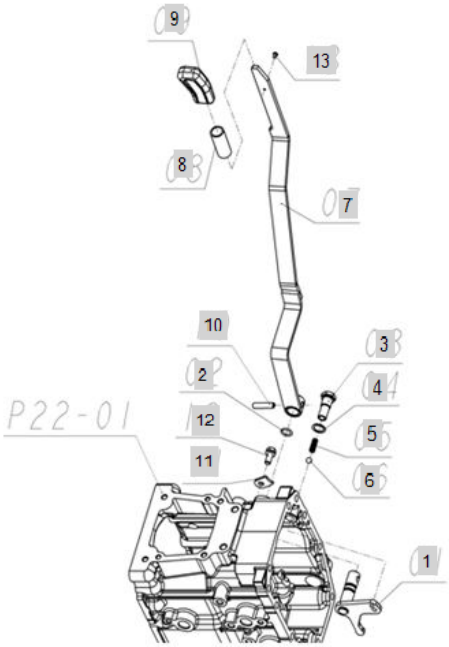

FIG T062 Branson 2100	62. FRONT WHEEL DRIVE LEVER	Year/Month 2020/02

KeyNo.	Part Number	Part Name	Quantity	Other
1	FE68010000A	ARM, 4WD SHIFT	1	
2	24311-000125	O-RING, DYNAMIC (Φ12.5)	1	
3	FE68030000A	PULG, 4WD	1	
4	23414-140000	PACKING14	1	
5	FE51030000B	SPRING	1	
6	24190-100001	Ball, Steel (5/16)	1	
7	FE68070000D	LEVEL, 4WD CHANGE	1	
8	TA00016637A	LEVER HOSE 16X80	1	
9	TA00017708A	KNOB(RED)	1	
10	22351-080032	PIN, SPRING (8-32)	1	
11	RN41050000A4	PLATE, KEEP	1	
12	26013-080202	Bolt, Hexa (8-20)	1	
13	26557-040062	SCREW	1	

FIG T063 Branson 2100	63. PTO GEAR SHIFT LEVER	Year/Month 2020/02

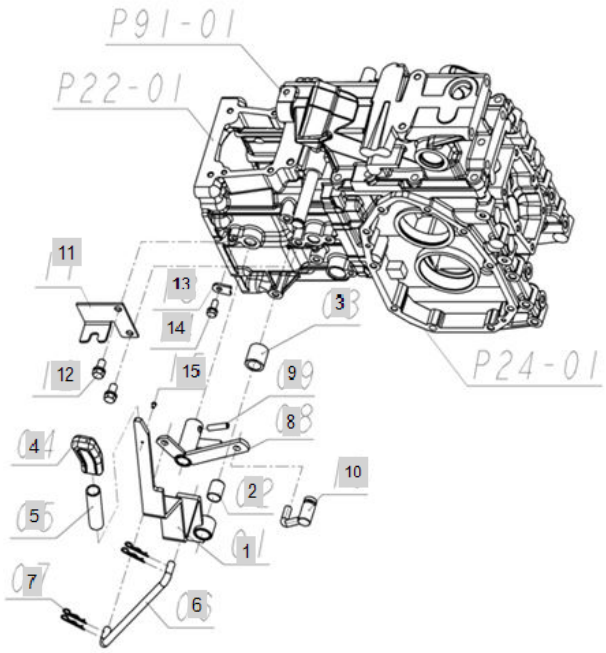

FIG T063 Branson 2100	63. PTO GEAR SHIFT LEVER	Year/Month 2020/02

KeyNo.	Part Number	Part Name	Quantity	Other
1	FE69010000D	LEVER, PTO SHIFT	1	
2	24550-018250	DRYBUSH	1	
3	FE69030000A	Collar	1	
4	TA00017709A	KNOB(YELLOW)	1	
5	TA00016637A	LEVER HOSE 16X80	1	
6	FE69060000A	Rod, PTO	1	
7	22360-100000	PIN , SNAP (10Φ)	4	
8	FE69080000B	PTO LEVER	1	
9	22351-080032	PIN, SPRING (8-32)	1	
10	FE69100000A	ROD	1	
11	FE69110000B	STAY	1	
12	26013-100202	BOLT(+SW)	2	
13	RN41050000A4	PLATE, KEEP	1	
14	26013-080202	Bolt, Hexa (8-20)	1	
15	26557-040062	SCREW	1	

FIG T065 Branson 2100	65. POSITION CONTROL LEVER	Year/Month 2020/02

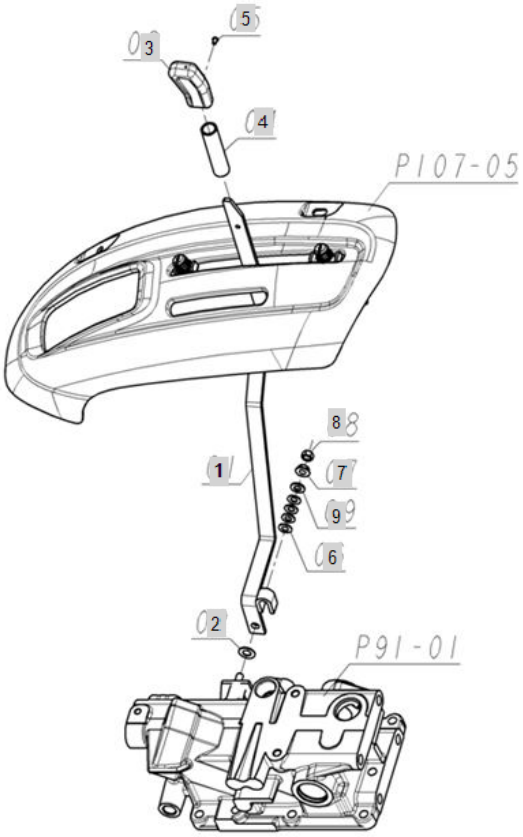

FIG T065 Branson 2100	65. POSITION CONTROL LEVER	Year/Month 2020/02

KeyNo.	Part Number	Part Name	Quantity	Other
1	TA00019121A	HYD. CONTROL LEVER	1	
2	TA00019119A	SHIM	1	
3	TA00017710A	KNOB(BLACK)	1	
4	TA00016637A	LEVER HOSE 16X80	1	
5	26557-040062	SCREW	1	
6	RRD3060000A4	SPRING, BELLEVILLE	4	
7	26366-080002	Nut, Hexa (Φ8)	1	
8	26712-080002	HEX NUT	1	
9	22127-080000	WASHER, PLAIN (D80)	1	

FIG T066 Branson 2100	66. DIFFERENTIAL LOCK PEDAL	Year/Month 2020/02

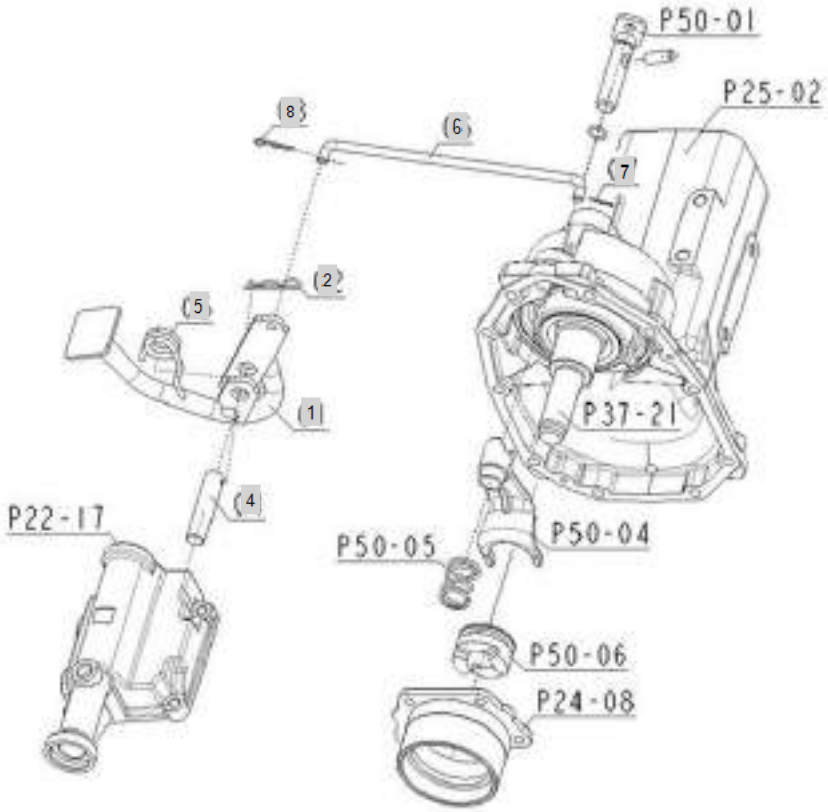

FIG T066 Branson 2100	66. DIFFERENTIAL LOCK PEDAL	Year/Month 2020/02

KeyNo.	Part Number	Part Name	Quantity	Other
1	FE72010000B	DIFFERANTIAL FIXING PEDAL	1	
2	22360-160000	PIN , SNAP (6Φ)	1	
4	FE72040000A	PIVOT SHAFT, DIFF PEDAL	1	
5	FE72050000B		1	
6	FE72060000A	ROD, DIFF LOCK	1	
7	22417-200160	PIN , COTTER (2-16)	1	
8	22360-080000	PIN , SNAP (8Φ)	1	

FIG T068-1 Branson 2100	68. FRONT AXLE FRAME	Year/Month 2020/02

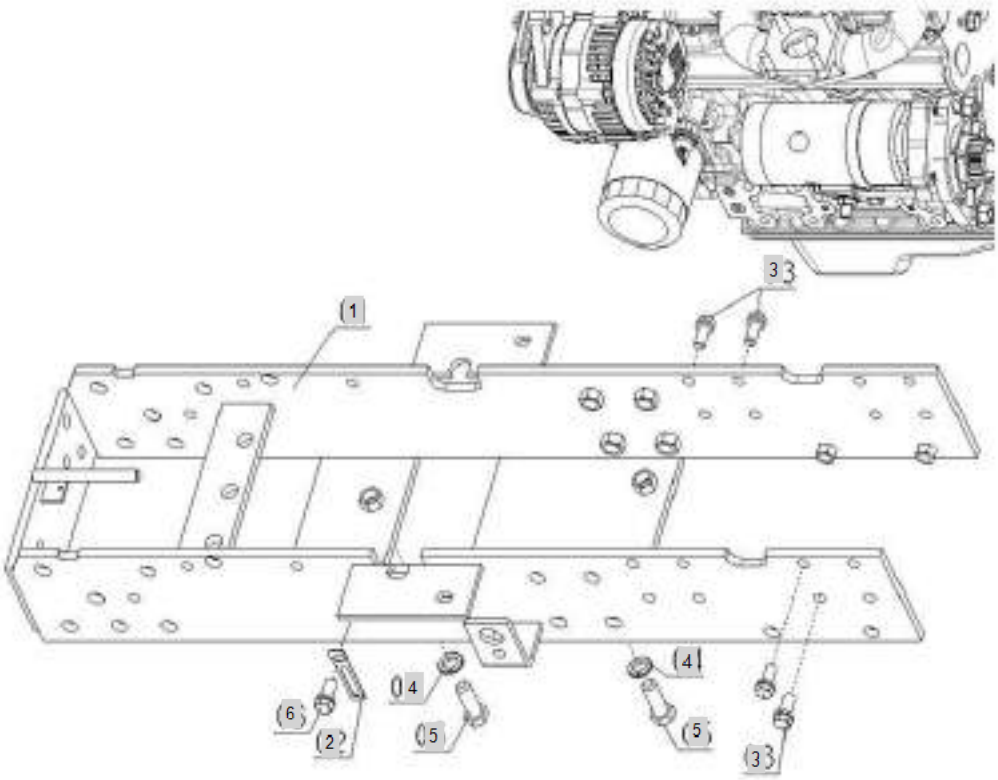

FIG T068-1 Branson 2100	68. FRONT AXLE FRAME	Year/Month 2020/02

KeyNo.	Part Number	Part Name	Quantity	Other
1	FE74010000F	COMP. FRAME, FRONT	1	
2	TCD5320000A4	Clamp, Wire D	1	
3	26013-100252	SCREW,CAPTIVEWASHERCAP	16	
4	22217-140000	WASHER, SPRING (Φ 14)	4	
5	26116-140402	BOLT	4	
6	26014-100162	HEX BOLT W/WASHER	1	

FIG T068-2 Branson 2100	68. FRONT AXLE FRAME	Year/Month 2020/02

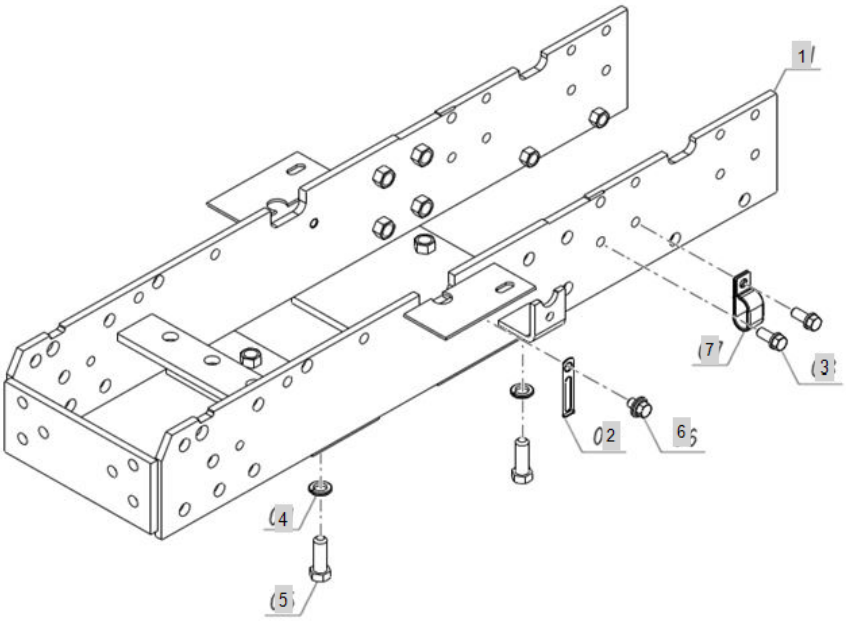

FIG T068-2 Branson 2100	68. FRONT AXLE FRAME	Year/Month 2020/02

KeyNo.	Part Number	Part Name	Quantity	Other
1	FE74010000F	COMP. FRAME, FRONT	1	
2	TCD5320000A4	Clamp, Wire D	1	
3	26013-100252	SCREW,CAPTIVEWASHERCAP	16	
4	22217-140000	WASHER, SPRING (Φ 14)	4	
5	26116-140402	BOLT	4	
6	26014-100162	HEX BOLT W/WASHER	1	
7	CA18080000A4	CLIPCDD-173219	1	

FIG T069 Branson 2100	69. FRONT AXLE CASE	Year/Month 2020/02

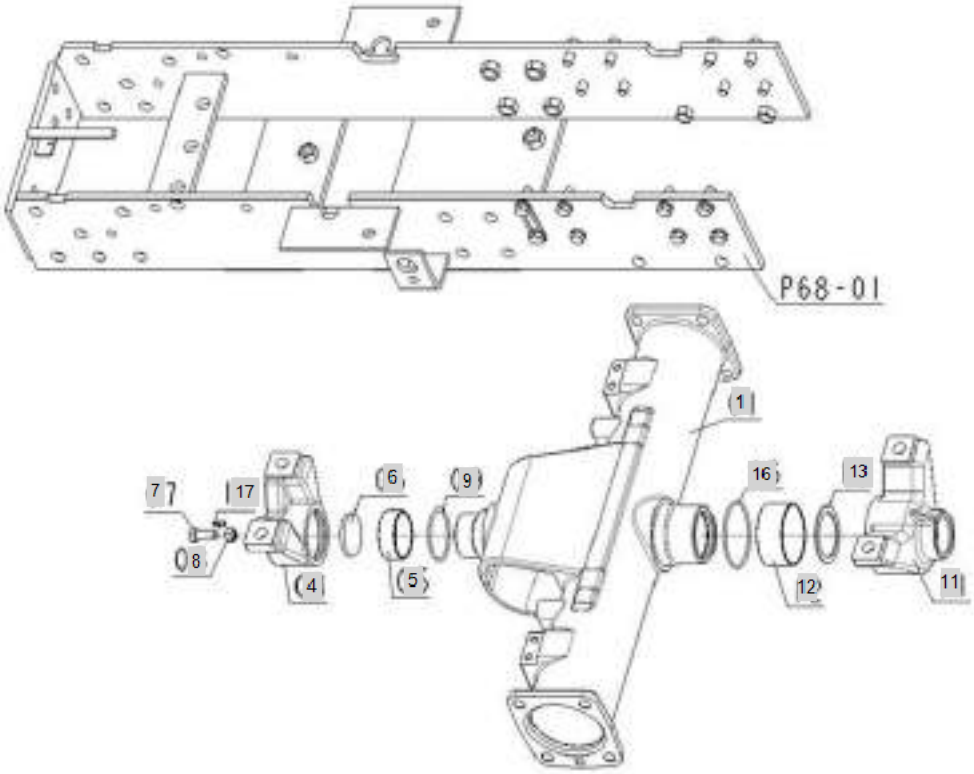

FIG T069 Branson 2100	69. FRONT AXLE CASE	Year/Month 2020/02

KeyNo.	Part Number	Part Name	Quantity	Other
1	FE76010000A	CASE, FRONT AXLE	1	
4	FE76040000A	HOLDER,FRONT	1	
5	24550-050200	BUSH,DRY	1	
6	FE76060000A	COLLAR, THRUST	1	
7	26116-100252	BOLT7T(100X25)	1	
8	26716-100002	Nut, Hexa (Φ10)	1	
9	24321-000550	SEAL,O-RING	1	
11	FE76100000A	HOLDER	1	
12	24550-065300	DRY BUSH	1	
13	FE76120000A	COLLAR, THRUST	1	
16	24321-000700	O-RING1AG-70	1	
17	24764-060000	GREASE NIPPLE	1	

FIG T070-1 Branson 2100	70. FRONT DIFFERENTIAL	Year/Month 2020/02

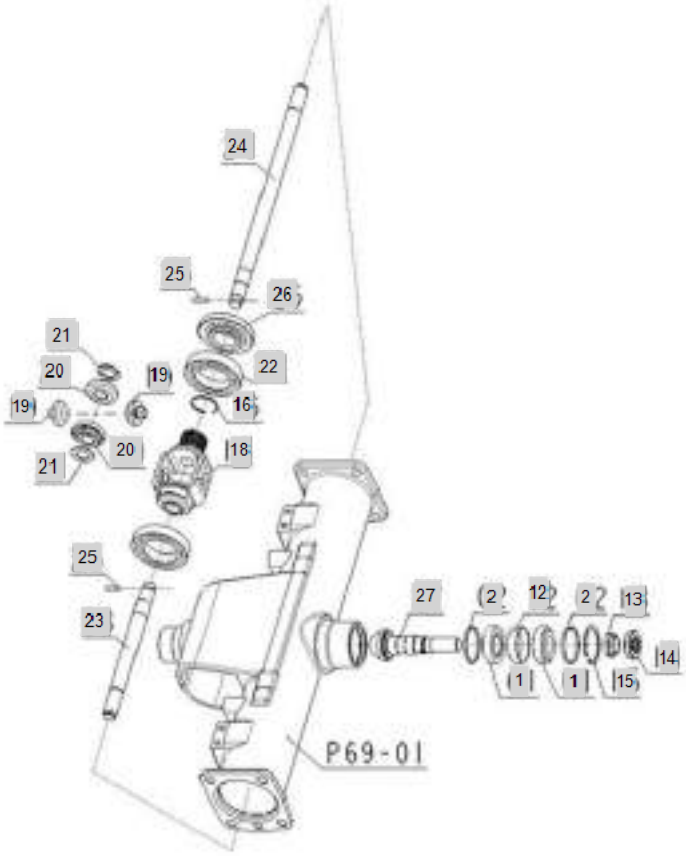

FIG T070-1 Branson 2100	70. FRONT DIFFERENTIAL	Year/Month 2020/02

KeyNo.	Part Number	Part Name	Quantity	Other
1	24142-302050	ROLLER BEARING	2	
2	FE77020000A	COLLAR(2.0T)	2	
12	FE77120000A	COLLAR	1	
13	FE77130000A	LOCK NUT, PINION	1	
14	FE77140000A	OIL SEAL, FRONT AXLE	1	
15	22252-000520	RING, CIRCLIP (Φ 52)	1	
16	24164-000352	STOP RING	1	
18	FE77180000A	Case, Front Differential	1	
19	FE77190000A	Pinion, Front Differential Bevel Gear	2	
20	FE77200000A	Gear, Bevel 14T	2	
21	FE77210000A	Collar, Front Differential Pinion	2	
22	TA00000750A	BALL BEARING	2	
23	FE77230000A	Shaft, Front Differential York L	1	
24	FE77240000A	Shaft, Front Differential York R	1	
25	22351-050020	PIN, SPRING (5-20)	2	
26	FE77260200A	Gear, Front Differential Ring	1	
27	FE77260100A	PINION, DRIVE	1	

FIG T070-2 Branson 2100	FRONT DIFFERENTIAL	Year/Month 2020/02

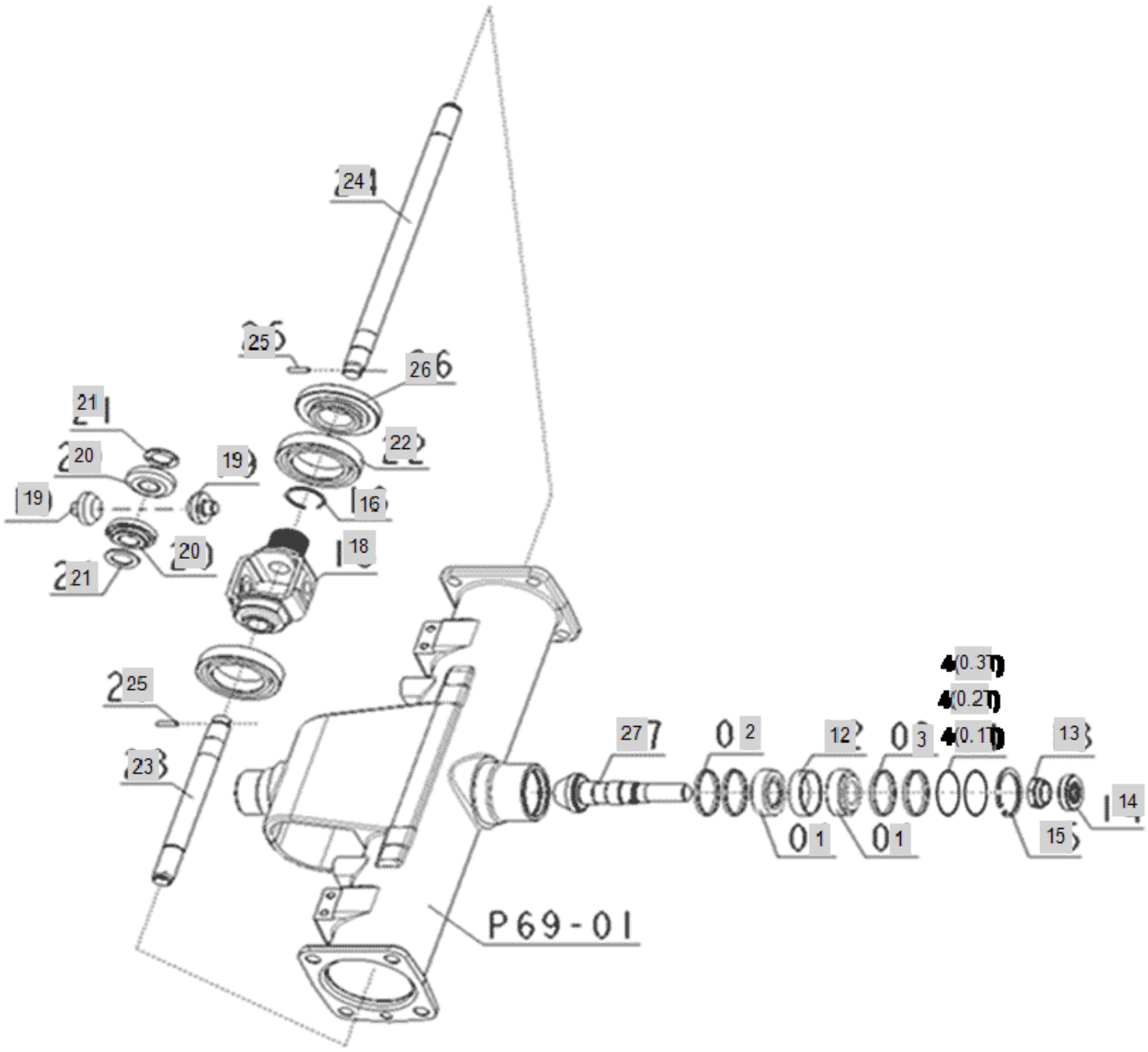

FIG T070-2 Branson 2100	FRONT DIFFERENTIAL	Year/Month 2020/02

KeyNo.	Part Number	Part Name	Quantity	Other
1	24142-302050	ROLLER BEARING	2	
2	TA00060445A	COLLAR(2.0T)	2	
3	TA00060444A	COLLAR(1.6T)	2	
4(0.1T)	TA00060446A	SHIM(0.1)	2	
4(0.2T)	TA00060447A	SHIM(0.2)	2	
4(0.3T)	TA00060448A	SHIM(0.3)	2	
12	FE77120000A	COLLAR	1	
13	FE77130000A	LOCK NUT, PINION	1	
14	FE77140000A	OIL SEAL, FRONT AXLE	1	
15	22252-000520	RING, CIRCLIP (Φ 52)	1	
16	24164-000352	STOP RING	1	
18	FE77180000A	Case, Front Differential	1	
19	FE77190000A	Pinion, Front Differential Bevel Gear	2	
20	FE77200000A	Gear, Bevel 14T	2	
21	FE77210000A	Collar, Front Differential Pinion	2	
22	24101-060104	Bearing, Ball (#6010)	2	
23	FE77230000A	Shaft, Front Differential York L	1	
24	FE77240000A	Shaft, Front Differential York R	1	
25	22351-050020	PIN, SPRING (5-20)	2	
26	FE77260200A	Gear, Front Differential Ring	1	
27	FE77260100A	PINION, DRIVE	1	

FIG T071 Branson 2100	71. DIFFERENTIAL GEAR SHAFT	Year/Month 2020/02

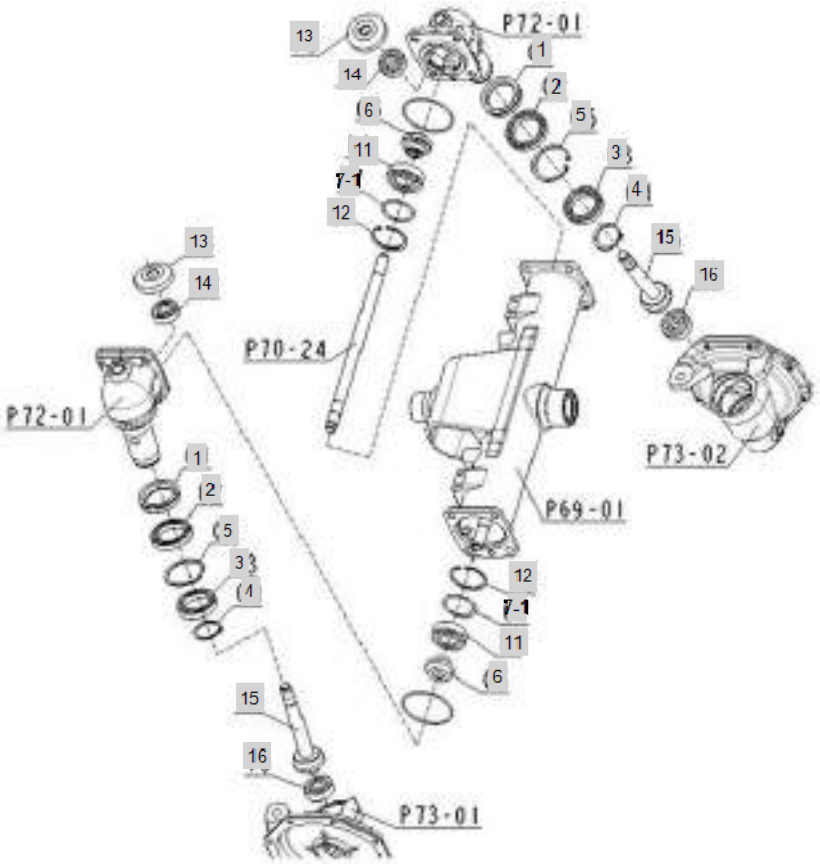

FIG T071 Branson 2100	71. DIFFERENTIAL GEAR SHAFT	Year/Month 2020/02

KeyNo.	Part Number	Part Name	Quantity	Other
1	FE78010000B	OIL SEAL (55X72X13.5)	2	
2	TA00016999A	BALL BEARING #6910	2	
3	TA00017000A	BALL BEARING#6909	2	
4	22242-000450	SNAP RING, SHAFT (Φ 45)	2	
5	22252-000680	RING, CIRCLIP (Φ 68)	2	
6	FE78060000A	GEAR	2	
7-1	FE78070000A	SHIM 0.8	2	
7-2	FE78080000A	SHIM 1.0	2	
7-3	FE78090000A	SHIM 0.6	2	
7-4	FE78100000A	SHIM 1.4	2	
11	TA00017001A	BALL DEARING#6206	2	
12	22252-000620	RING, CIRCLIP (Φ 62)	2	
13	FE78130000A	GEAR	2	
14	TA00016550A	BALL BEARING	2	
15	FE78150000A	SHAFT, BEVEL GEAR	2	
16	TA00016554A	BALL BEARING	2	

FIG T072-1 Branson 2100	72. BEVEL GEAR CASE	Year/Month 2020/02

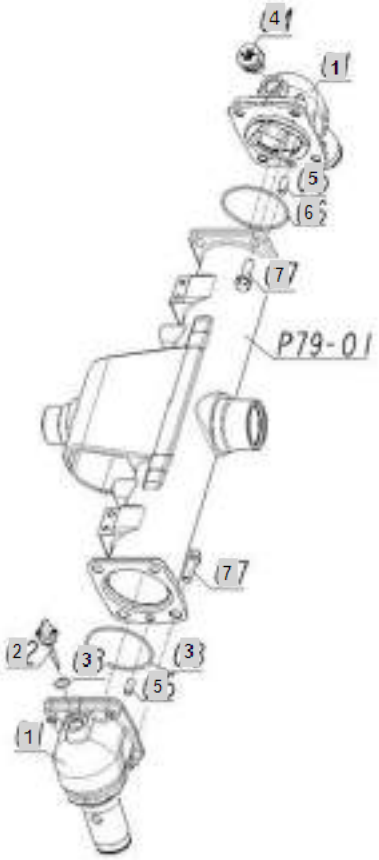

FIG T072-1 Branson 2100	72. BEVEL GEAR CASE	Year/Month 2020/02

KeyNo.	Part Number	Part Name	Quantity	Other
1	FE79010000B	CASE, BEVEL GEAR	2	
2	FE79020000A	GUAGE,OIL	1	
3	24311-000180	O-RING, DYNAMIC (Φ18)	1	
4	TC60790000B3	CAP(M20),OIL	1	
5	22312-100200	PIN, DOWEL (10-20)	2	
6	24321-000850	ORING(G85)	2	
7	26013-120352	SCREW,CAPTIVEWASHERCAP	8	

FIG T072-2 Branson 2100	BEVEL GEAR CASE(2017.05)	Year/Month 2020/02

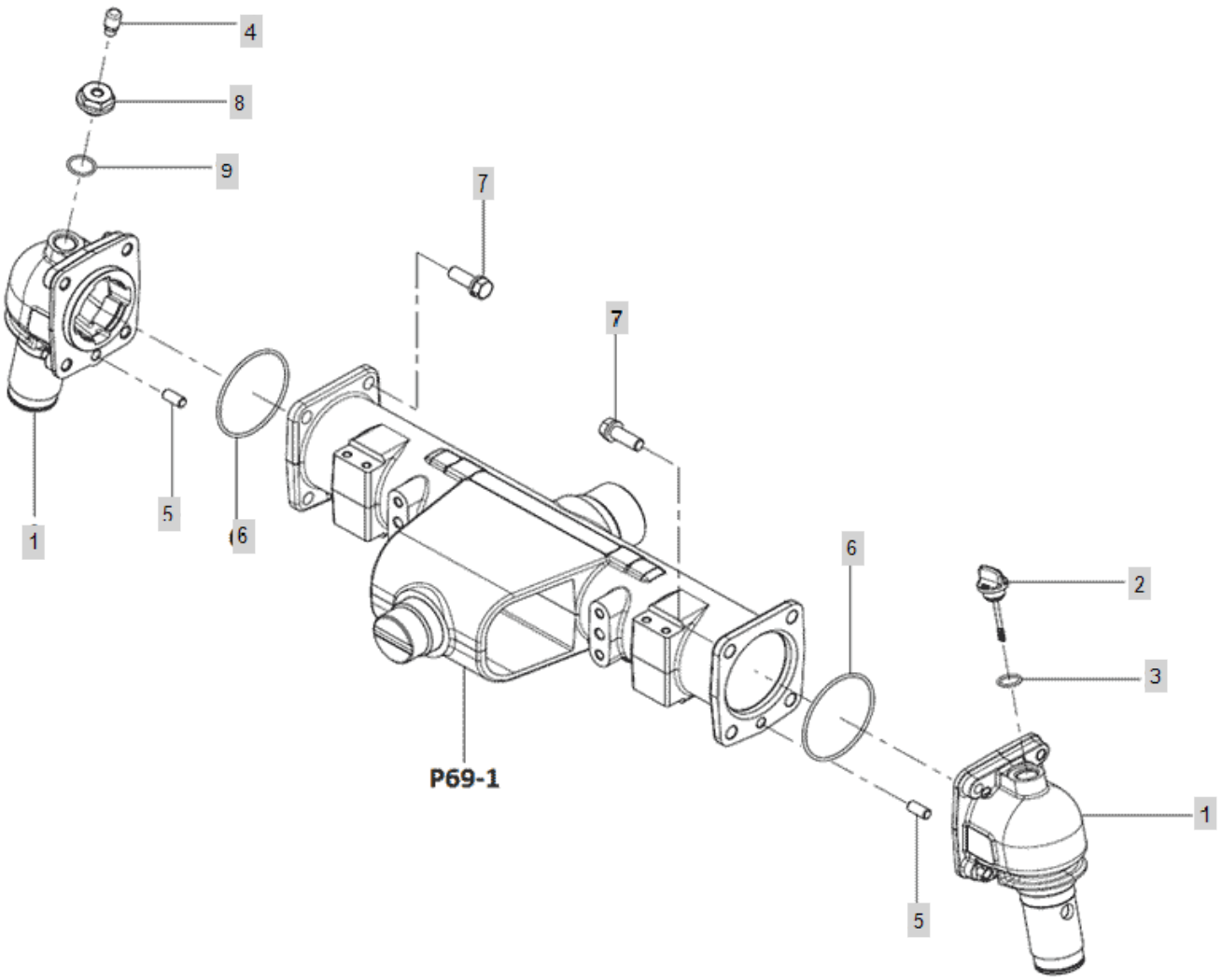

FIG T072-2 Branson 2100	BEVEL GEAR CASE(2017.05)	Year/Month 2020/02

KeyNo.	Part Number	Part Name	Quantity	Other
1	FE79010000B	CASE, BEVEL GEAR	2	
2	FE79020000A	GUAGE,OIL	1	
3	24311-000180	O-RING, DYNAMIC (Φ18)	1	
4	TA00049842A	AIR BREATHER	1	
5	22312-100200	PIN, DOWEL (10-20)	2	
6	24321-000850	ORING(G85)	2	
7	26013-120352	SCREW,CAPTIVEWASHERCAP	8	
8	TA00049843A	ADAPTHER	1	
9	24311-000220	O-RING, DYNAMIC (Φ22)	1	

FIG T073 Branson 2100	73. FRONT AXLE CASE	Year/Month 2020/02

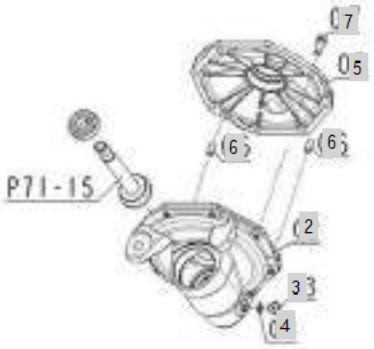

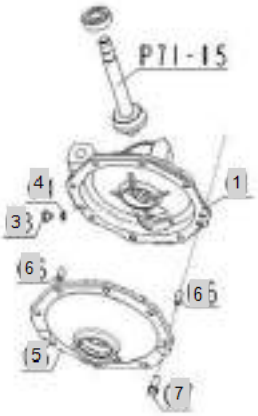

FIG T073 Branson 2100	73. FRONT AXLE CASE	Year/Month 2020/02

KeyNo.	Part Number	Part Name	Quantity	Other
1	FE80010000C	CASE, GEAR LH	1	
2	FE80020000C	CASE, GEAR RH	1	
3	23887-100002	SCREW,HEXAGONHEADCAP	2	
4	23414-100000	PLAIN WASHER (D10)	2	
5	FE80050000A	COVER,GEAR CASE	2	
6	22312-100200	PIN, DOWEL (10-20)	4	
7	26013-100282	BOLT	16	

FIG T074 Branson 2100	74. FRONT SPINDLE	Year/Month 2020/02

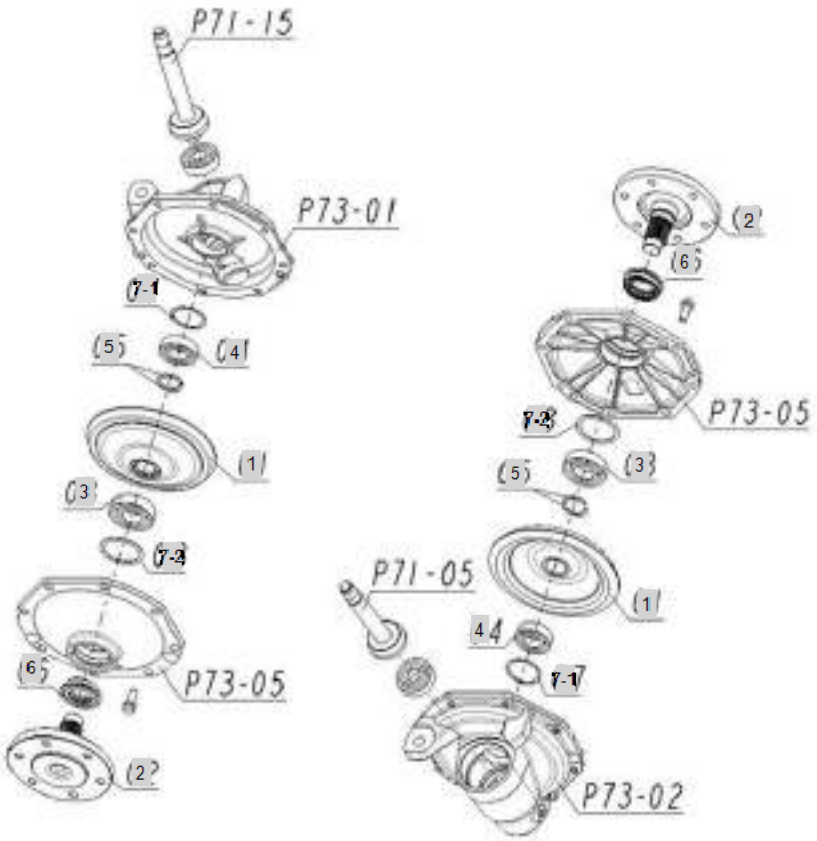

FIG T074 Branson 2100	74. FRONT SPINDLE	Year/Month 2020/02

KeyNo.	Part Number	Part Name	Quantity	Other
1	FE81010000A	BEVEL GEAR	2	
2	FE81020000A	FRONT SPINDLE	2	
3	TA00017001A	BALL DEARING#6206	2	
4	TA00000753A	BALL BEARING	2	
5	FE81060000A	SET COLLAR	4	
6	FE81070000A	SEAL,OIL	2	
7-1	FE81080000A	SHIM 0.8	2	
7-2	FE81090000A	SHIM 1.0	2	
7-3	FE81100000A	SHIM 1.2	2	
8-1	FE78070000A	SHIM 0.8	2	
8-2	FE78080000A	SHIM 1.0	2	
8-3	FE78090000A	SHIM 0.6	2	
8-4	FE78100000A	SHIM 1.4	2	

FIG T075 Branson 2100	75. FORNT DRIVE SHAFT	Year/Month 2020/02

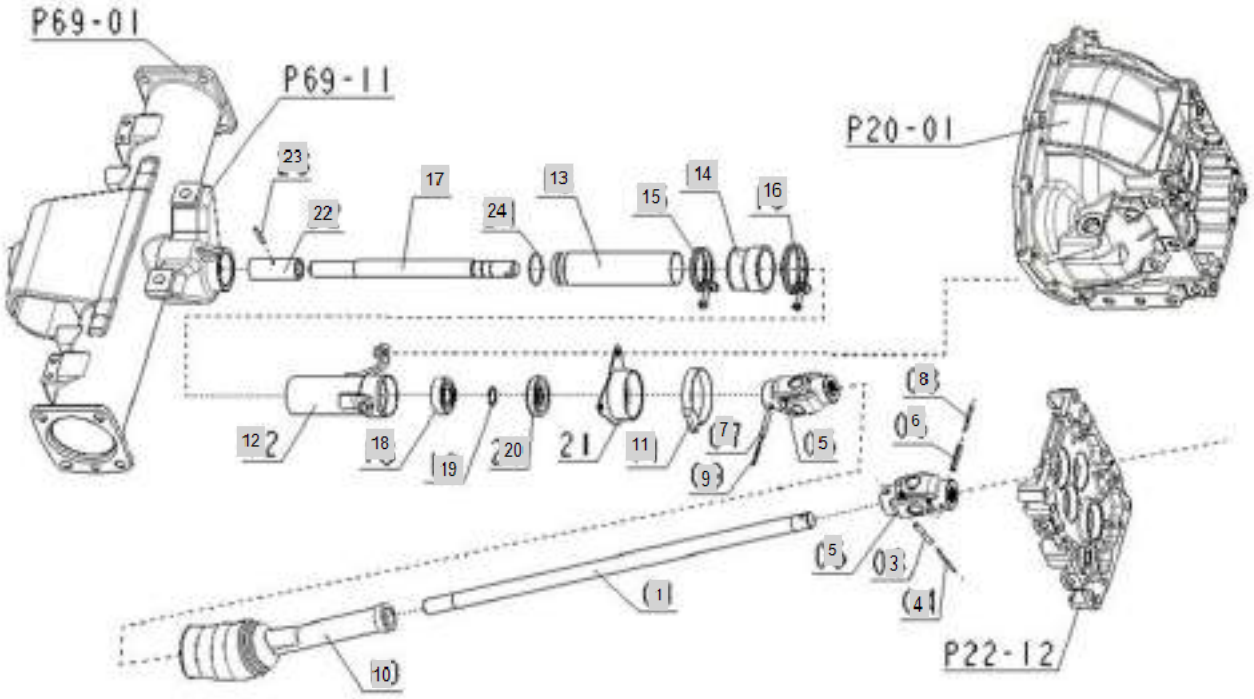

FIG T075 Branson 2100	75. FORNT DRIVE SHAFT	Year/Month 2020/02

KeyNo.	Part Number	Part Name	Quantity	Other
1	FE82010000A	SHAFT,DRIVE	1	
3	22351-060040	PIN, SPRING (6-40)	1	
4	22351-035040	PIN, SPRING (3-04)	1	
5	FE82050000A	ASS'Y JOINT, UNIVERSAL	2	
6	22351-060040	PIN, SPRING (6-40)	1	
7	22351-060040	PIN, SPRING (6-40)	1	
8	22351-035040	PIN, SPRING (3-04)	1	
9	22351-035040	PIN, SPRING (3-04)	1	
10	FE82100000A	COVER	1	
11	23000-070000	CLAMP,HOSE	1	
12	FE82120000B	COVER A, FRONT DRIVE SHAFT	1	
13	TA00041304A	COVER ASS'Y	1	
13-1	FE82130000A	COVER B	1	
14	FE82140000A	COVER C	1	
15	23010-050000	HOSEBAND50	1	
16	23010-058000	HOSEBAND58	1	
17	FE82170000A	DRIVE SHAFT,FRONT	1	
18	TA00016551A	BALL BEARING	1	
19	22242-000200	SNAP RING, SHAFT (Φ 20)	1	
20	FE82200000A	SEAL,OIL	1	delete
21	FE82210000A	SUPPORT	1	
22	FE82220000A	COUPLING	1	
23	22351-040030	PIN, SPRING (4-03)	1	
24	24341-000390	O-RING, FIX (Φ39)	1	

FIG T077 Branson 2100	77. PST CYLINDER COVER	Year/Month 2020/02

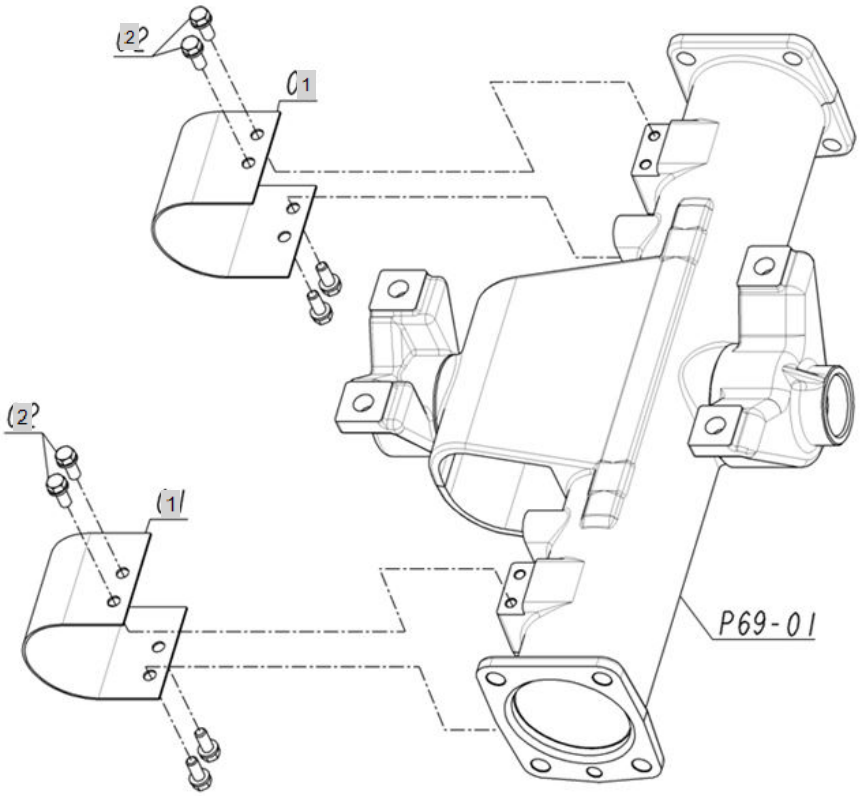

FIG T077 Branson 2100	77. PST CYLINDER COVER	Year/Month 2020/02

KeyNo.	Part Number	Part Name	Quantity	Other
1	FE86040000A	SAFETY COVER, TIE ROD	2	
2	26013-080202	Bolt, Hexa (8-20)	8	

FIG T078 Branson 2100	78. TIE ROD	Year/Month 2020/02

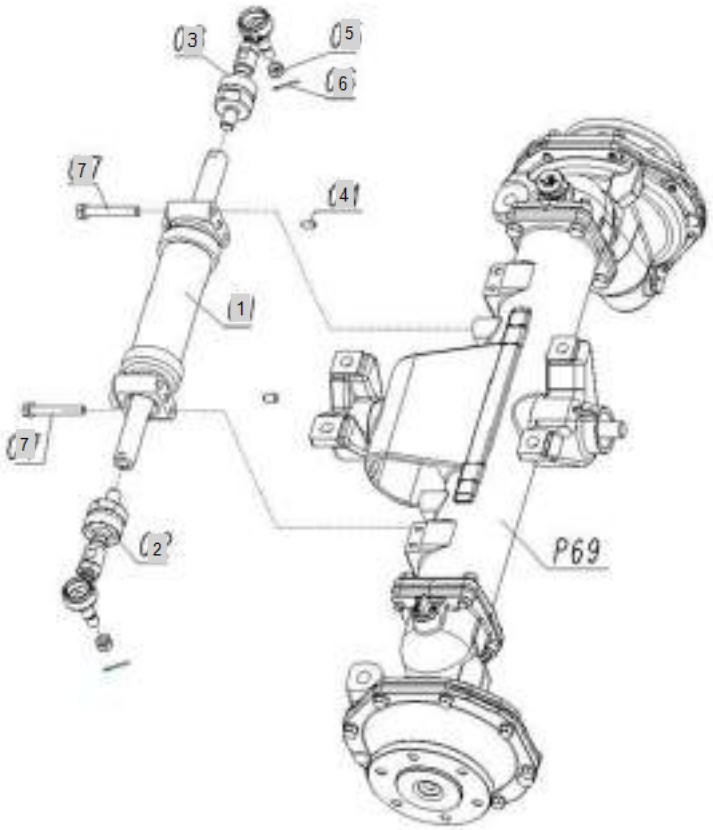

FIG T078 Branson 2100	78. TIE ROD	Year/Month 2020/02

KeyNo.	Part Number	Part Name	Quantity	Other
1	FE86010000A	CYLINDER ASS'Y, PST	1	
2	FE86020000B	TIE ROD ASSY LH	1	
3	FE86030000B	TIE ROD ASSY RH	1	
4	22312-100140	PIN,STRAIGHT	2	
5	26877-120002	CASTLENUT12	2	
6	22417-300250	PIN , COTTER (3-25)	2	
7	26013-100702	HEX BOLT W/WASHER	4	

FIG T079 Branson 2100	79. STEERING WHEEL	Year/Month 2020/02

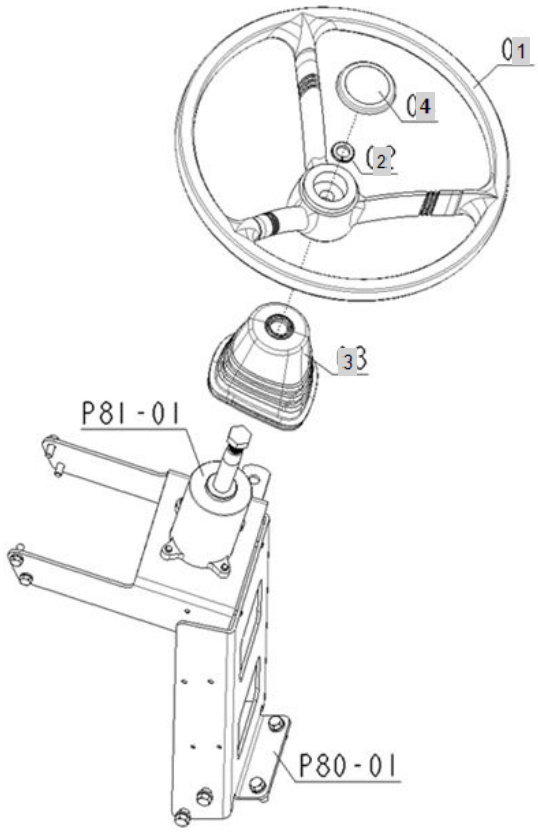

FIG T079 Branson 2100	79. STEERING WHEEL	Year/Month 2020/02

KeyNo.	Part Number	Part Name	Quantity	Other
1	TZ29030000A1	STEERING WHEEL	1	
2	22217-160000	WASHER, SPRING (Φ 16)	1	
3	FE87030000A	BOOT,STEARING	1	
4	TA00026432A	STEERING WHEEL CAP (BRANSON)	1	

FIG T080 Branson 2100	80. STEERING POST	Year/Month 2020/02

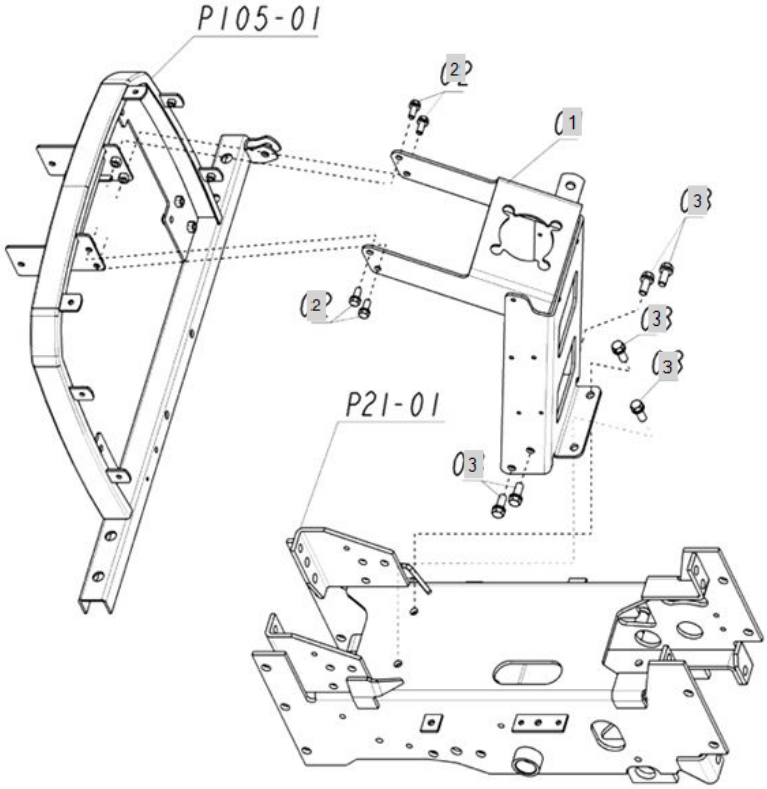

FIG T080 Branson 2100	80. STEERING POST	Year/Month 2020/02

KeyNo.	Part Number	Part Name	Quantity	Other
1	FE88010000C	POST, STEERING	1	
2	26013-080202	Bolt, Hexa (8-20)	4	
3	26106-100252	SCREW,HEXFLANGEHEADCAP	6	

FIG T081 Branson 2100	81. PST UNIT	Year/Month 2020/02

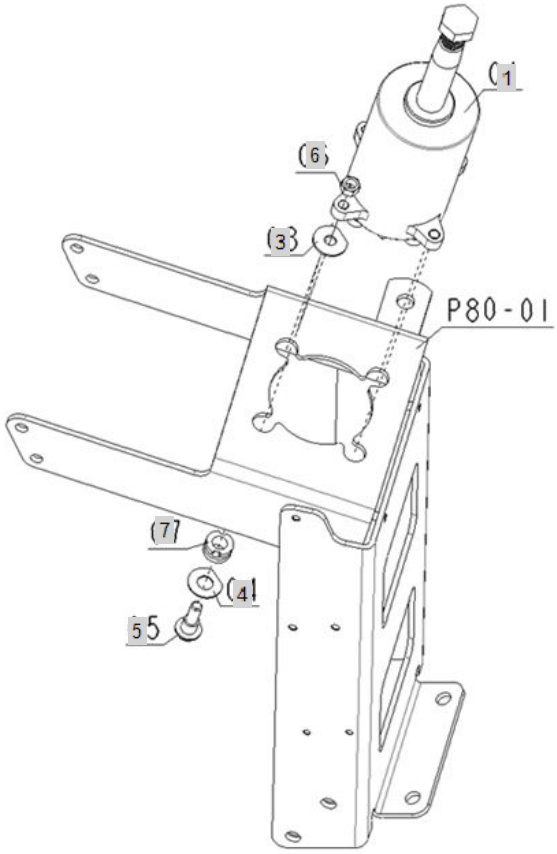

FIG T081 Branson 2100	81. PST UNIT	Year/Month 2020/02

KeyNo.	Part Number	Part Name	Quantity	Other
1	FE89010000A	POWER STEERING UNIT	1	
3	TA00016425A	PLAIN WASHER 8.5X21X1.6	4	
4	TA00016426A	PLAIN WASHER 11.5X21X1.6	4	
5	TA00016566A	PST BOLT	4	
6	26716-080002	NUT,HEX (D8)	4	
7	FEB6050000A	CUSHION	4	

FIG T082 Branson 2100	82. HYDRAULIC PUMP	Year/Month 2020/02

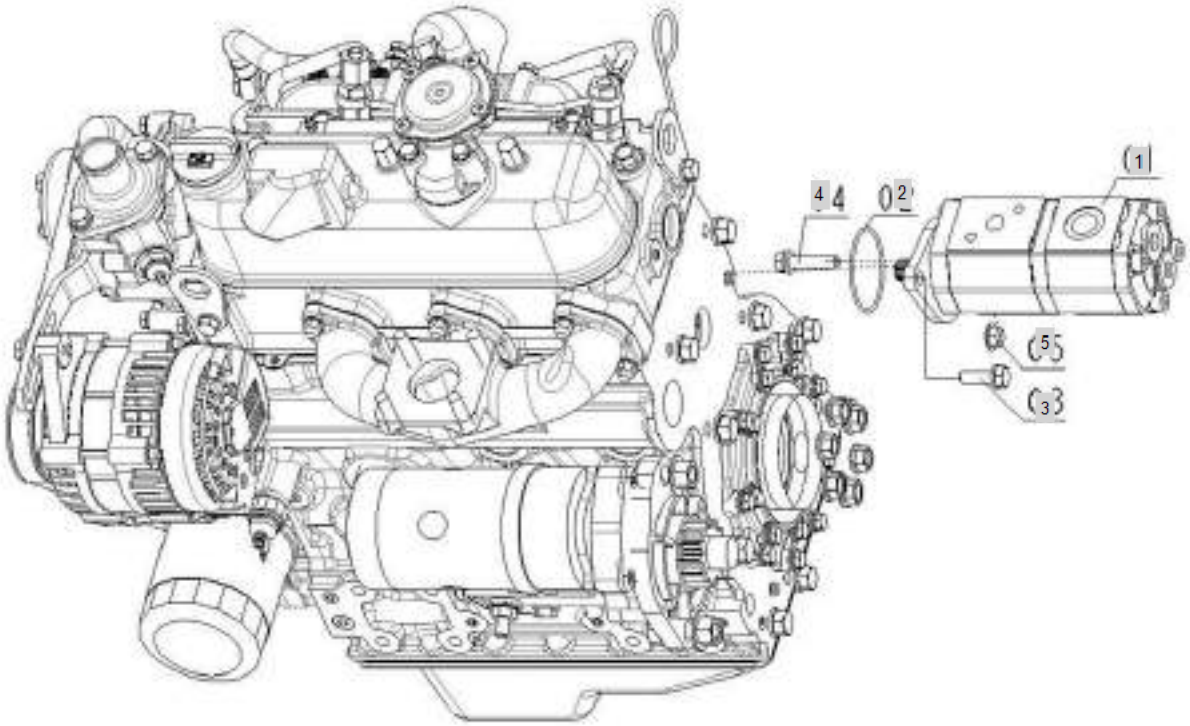

FIG T082 Branson 2100	82. HYDRAULIC PUMP	Year/Month 2020/02

KeyNo.	Part Number	Part Name	Quantity	Other
1	FE90010000A	PUMP ASS'Y,HYDRAULIC	1	
2	24341-000500	O-RING, FIX (Φ50)	1	
3	26013-080252	Bolt, Hexa (8-25)	1	
4	26013-080352	SCREW,CAPTIVEWASHERCAP	1	
5	26366-080002	Nut, Hexa (Φ8)	1	

FIG T083 Branson 2100	83. HYDRAULIC OIL LINE (SUCTION)	Year/Month 2020/02

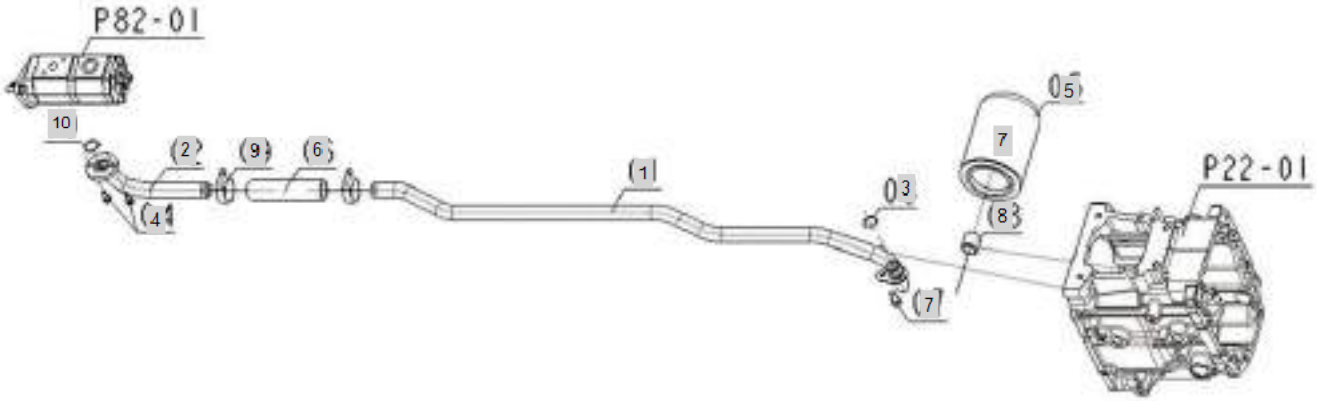

FIG T083 Branson 2100	83. HYDRAULIC OIL LINE (SUCTION)	Year/Month 2020/02

KeyNo.	Part Number	Part Name	Quantity	Other
1	FE91010000C	PIPE, SUCTION	1	
2	FE91020000A	Pipe, Suction (Oil Pump)	1	
3	24311-000200	O-RING, DYNAMIC (Φ20)	1	
4	26012-060169	BOLT	2	
5	FE91050000A	FILTER,HYDRAULIC OIL (00S)	1	
6	FE91060000A	HOSE	1	
7	26013-080202	Bolt, Hexa (8-20)	1	
8	RN24110000A4	SCREW, CONNECTING	1	
9	23000-035000	HOSECLAMP	2	
10	24311-000200	O-RING, DYNAMIC (Φ20)	1	

FIG T084A Branson 2100	84. HYDRAULIC OIL LINE (DELIVERY)	Year/Month 2020/02

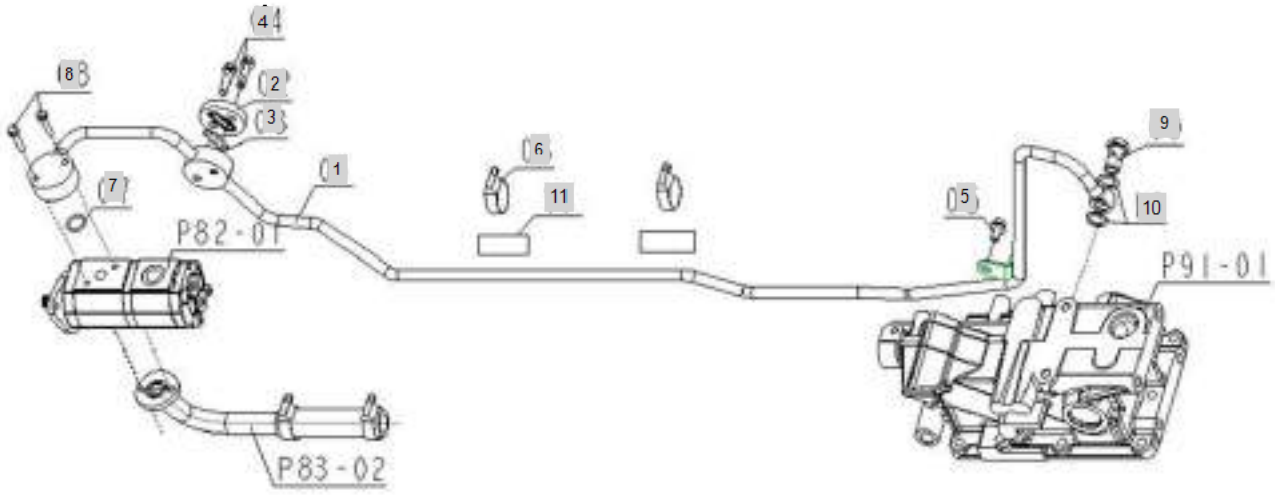

FIG T084A Branson 2100	84. HYDRAULIC OIL LINE (DELIVERY)	Year/Month 2020/02

KeyNo.	Part Number	Part Name	Quantity	Other
1	FE92010000A	PIPE,EXHAUST	1	
1B	TA00019027B	DELIVERY PIPE	1	
2	FE92020000B	CAP	1	
3	FE92030000A	O RING	1	
4	26013-080302	HEX BOLT W/WASHER	2	
5	26014-080202	Bolt, Hexa (8-20)	1	
6	23000-035000	HOSECLAMP	2	
7	24311-000200	O-RING, DYNAMIC (Φ20)	1	
8	26013-060322	BOLT	2	
9	TCC9020000A4	Bolt, (d=16mm)	1	
10	23414-160000	WASHER,SEALING	2	
11	TA00016619A	PAD	2	

FIG T085A Branson 2100	85. HYDRAULIC STEERING LINE	Year/Month 2020/02

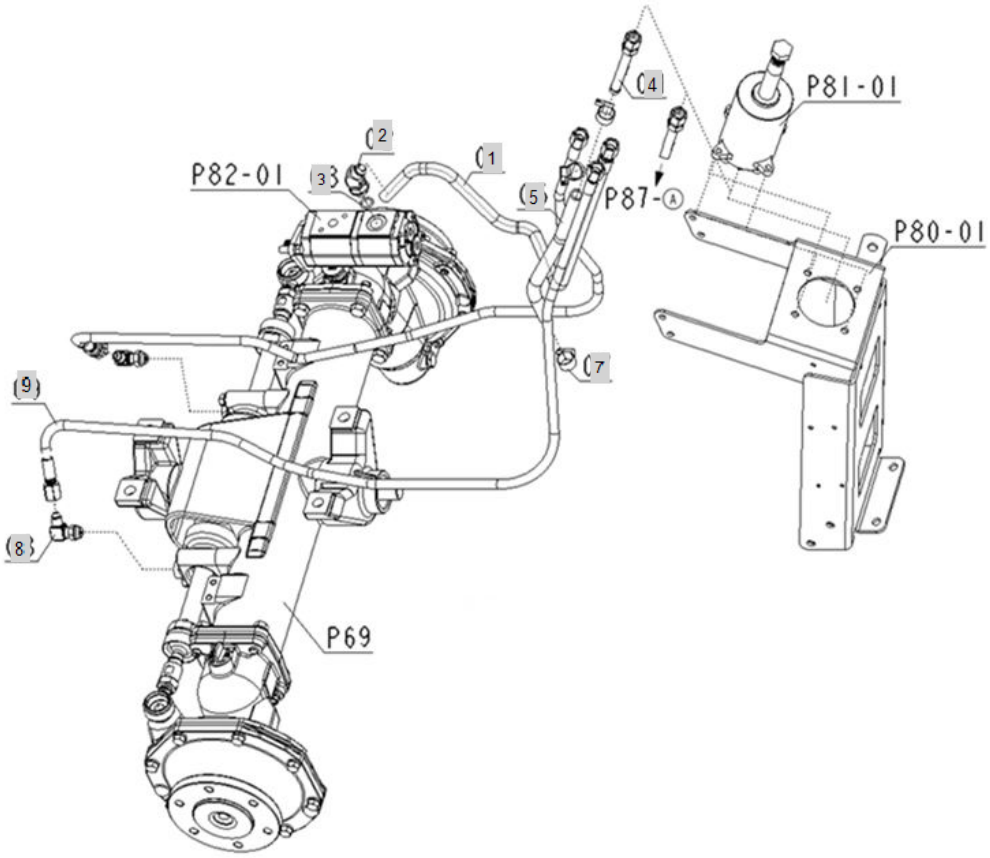

FIG T085A Branson 2100	85. HYDRAULIC STEERING LINE	Year/Month 2020/02

KeyNo.	Part Number	Part Name	Quantity	Other
1	FE93010000B	PIPE, DELIVERY	1	
2	FT33060000A4	45ELBOW[3/8]	1	
3	24311-000140	O-RING, DYNAMIC (Φ14)	1	
4	FE93040000B	PIPE	1	
5	FE93050000B	HOSE A, RETURN RUBBER	1	
7	23000-022000	CLAMP,HOSE	2	
8	RRA4220000A4	ELBOW, L-TYPE W/LOCKNUT	2	
9	FE93090000A	PST HOSE	2	
10	TA00003081A	CLIP	2	

FIG T086-2H Branson 2100	86. HYDRAULIC OIL LINE - HST	Year/Month 2020/02

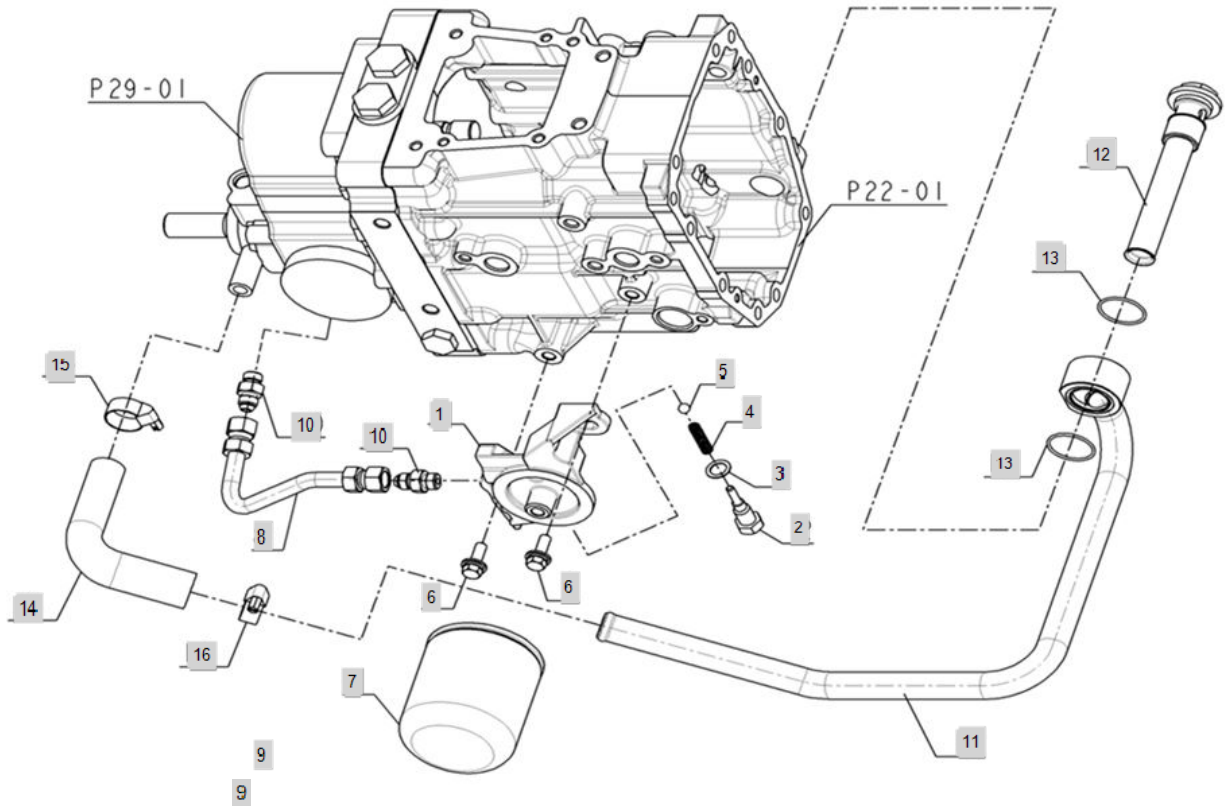

FIG T086-2H Branson 2100	86. HYDRAULIC OIL LINE - HST	Year/Month 2020/02

KeyNo.	Part Number	Part Name	Quantity	Other
1	TA00015425B	BRACKET_FILTER	1	
2	TA00015441A	BOLT	1	
3	23414-120000	WASHER, PLAIN (Φ 12)	1	
4	TA00015442A	SPRING	1	
5	24190-100001	Ball, Steel (5/16)	1	
6	26014-080252	Bolt, Hexa (8-25)	2	
7	TA00016986A	FILTER, HST OIL (00 SERIES)	1	
8	TA00015423B	PIPE_HYDRAULIC OIL LINE(HST)	1	
9	24311-000110	O-RING, DYNAMIC (Φ11)	2	
10	TA00017958A	NIBBLE	2	
11	TA00016262A	PIPE	1	
12	TA00016987A	OIL STRANER	1	
13	24341-000315	O-RING, FIX (Φ31.5)	2	
14	TA00015414A	HOSE_HYDRAULIC OIL LINE(HST)	1	
15	23000-028000	Clamp, Hose (Φ28)	1	
16	23000-028000	Clamp, Hose (Φ28)	1	

FIG T088 Branson 2100	88. HYDRAULIC OIL LINE (F/M)	Year/Month 2020/02

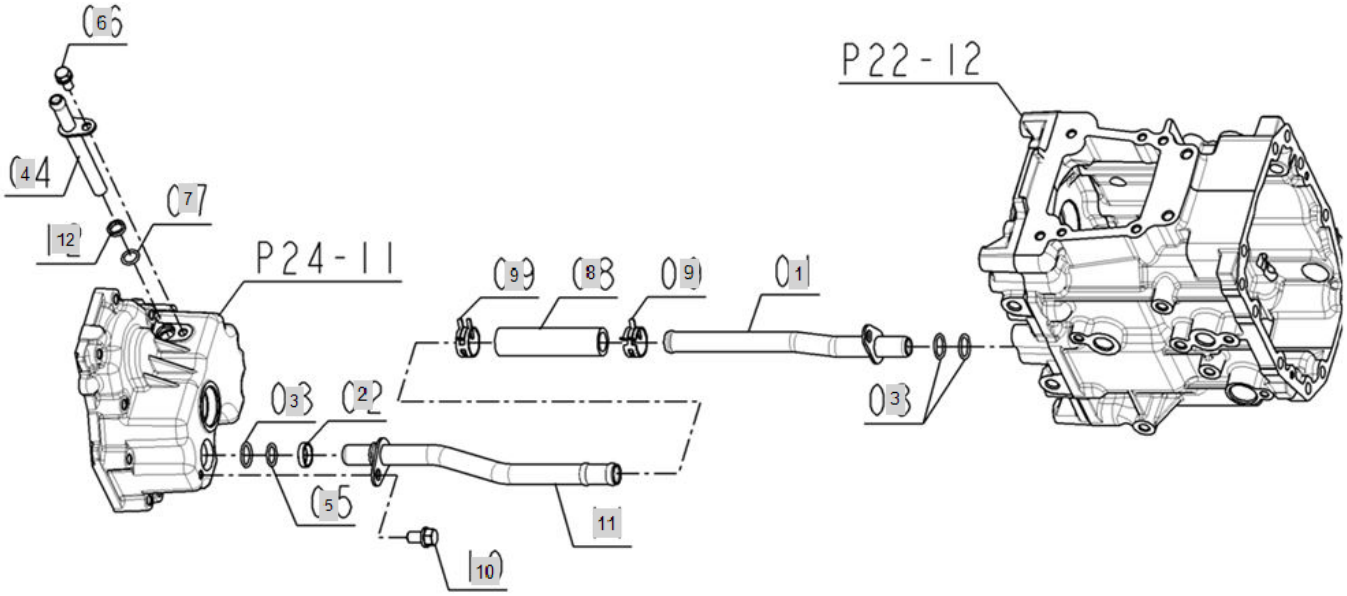

FIG T088 Branson 2100	88. HYDRAULIC OIL LINE (F/M)	Year/Month 2020/02

KeyNo.	Part Number	Part Name	Quantity	Other
1	FE96010000B	PIPE, CLUTCH HOUSING-TM	1	
2	FE96020000A	RING	1	
3	24311-000180	O-RING, DYNAMIC (Φ18)	3	
4	TA00016863A	RETURN PIPE	1	
5	24311-000160	O-RING, DYNAMIC (Φ16)	1	
6	26013-080162	Bolt, Hexa (8-16)	1	
7	24311-000120	O-RING, DYNAMIC (Φ12)	1	
8	TA00017667A	HOSE(CLUTCH-MISSION)	1	
9	TA00016988A	HOSE CLAMP 24	2	
10	26013-100182	BOLT	1	
11	TA00003097A	PIPE(HST)	1	
12	TA00020843A	COLLAR	1	

FIG T090 Branson 2100	90. HYDRAULIC CYLINDER	Year/Month 2020/02

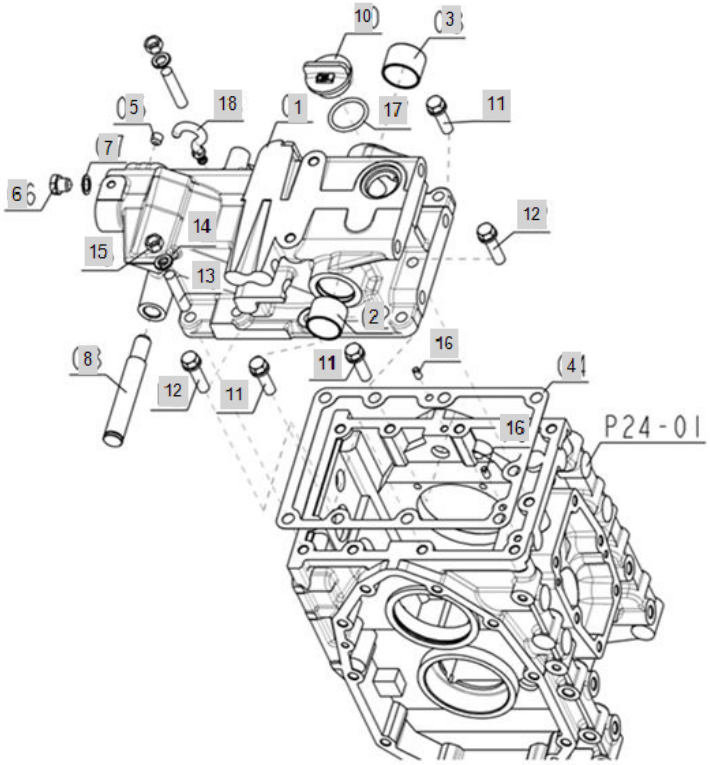

FIG T090 Branson 2100	90. HYDRAULIC CYLINDER	Year/Month 2020/02

KeyNo.	Part Number	Part Name	Quantity	Other
1	FE98010000F	ASS'Y CASE, CYLINDER	1	
2	TA00022682B	BUSH 34X41X25	1	
3	TA00022683A	BUSH 38X42X20	1	
4	FE98040000C	PACKING,CYLINDER CASE	1	
5	23871-010000	PLUG	1	
6	23887-120002	BOLT	1	
7	23414-120000	WASHER, PLAIN (Φ 12)	1	
8	FE98070000A	shaft	1	
10	HC03470000B4	CAP,FILTER	2	
11	26013-100352	Bolt, Hexa (10-35)	5	
12	26016-100402		2	
13	26216-100352	BOLT	2	
14	22217-100000	WASHER, SPRING (Φ 10)	2	
15	26712-100002	HEX NUT	2	
16	22312-060100	PIN, DOWEL (6-10)	2	
17	24311-000320	O-RING, DYNAMIC (Φ32)	1	
18	TA00019614A	CAP	1	

FIG T091 Branson 2100	91. HYDRAULIC CYLINDER (POSITION TYPE)	Year/Month 2020/02

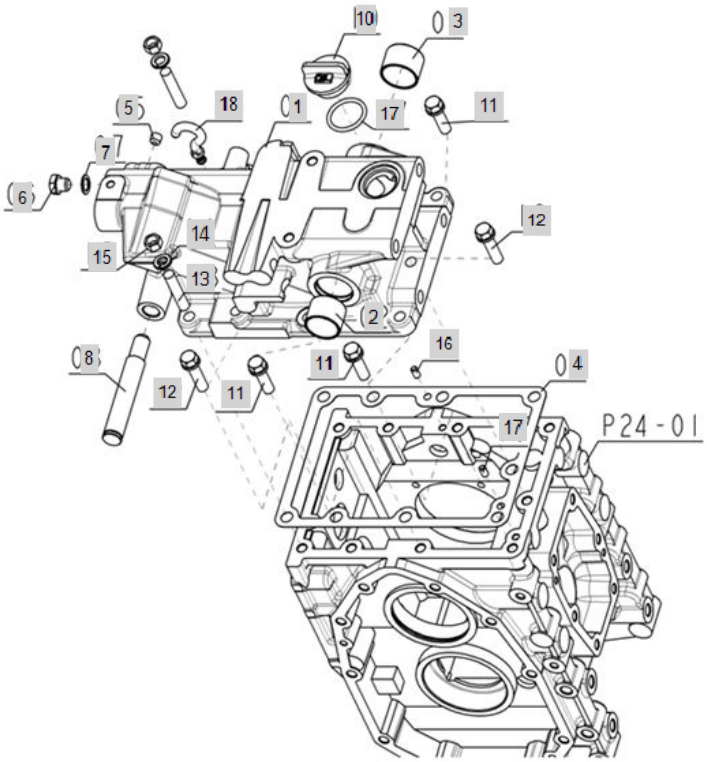

FIG T091 Branson 2100	91. HYDRAULIC CYLINDER (POSITION TYPE)	Year/Month 2020/02

KeyNo.	Part Number	Part Name	Quantity	Other
1	TA00022498B	CASE_CYLINDER	1	
2	TA00022682B	BUSH 34X41X25	1	
3	TA00022683A	BUSH 38X42X20	1	
4	FE98040000C	PACKING,CYLINDER CASE	1	
5	23871-010000	PLUG	1	
6	23887-120002	BOLT	1	
7	23414-120000	WASHER, PLAIN (Φ 12)	1	
8	FE98070000A	shaft	1	
10	HC03470000B4	CAP,FILTER	1	
11	26013-100352	Bolt, Hexa (10-35)	5	
12	26013-100402	Bolt, Hexa (10-40)	2	
13	26216-100352	BOLT	2	
14	22217-100000	WASHER, SPRING (Φ 10)	2	
15	26712-100002	HEX NUT	2	
16	22312-060100	PIN, DOWEL (6-10)	2	
17	24311-000320	O-RING, DYNAMIC (Φ32)	1	
18	TA00019614A	CAP	1	

FIG T092 Branson 2100	92. HYDRAULIC PISTON / LIFT ARM	Year/Month 2020/02

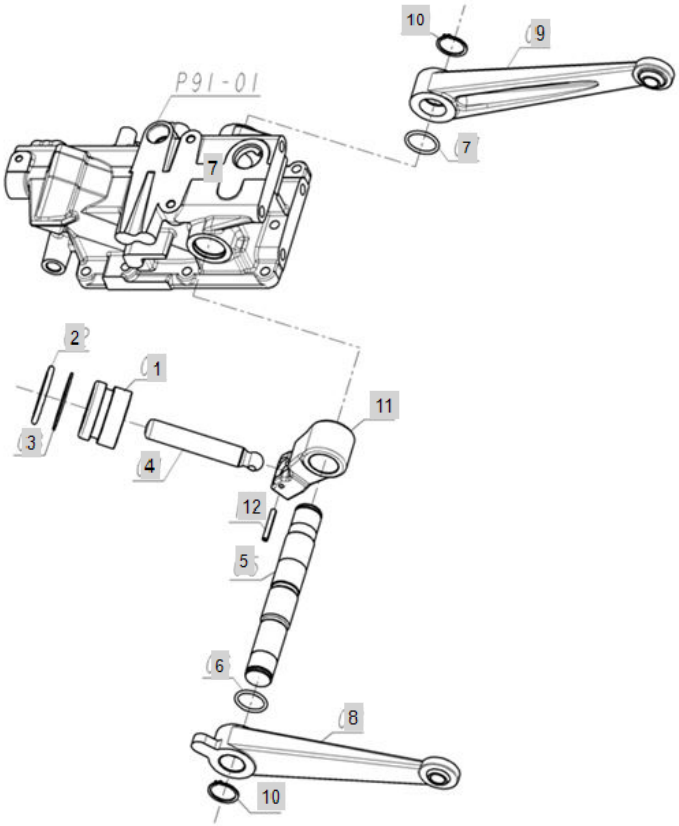

FIG T092 Branson 2100	92. HYDRAULIC PISTON / LIFT ARM	Year/Month 2020/02

KeyNo.	Part Number	Part Name	Quantity	Other
1	TA00022494A	PISTON -> TA00022494B	1	
2	TA00022680A	O-RING, HYD PISTON	1	
3	TA00022681A	BACK UP RING	1	
4	TA00022679A	ROD, HYD. PISTON	1	
5	TA00022493C	SHAFT, HYD. ARM	1	
6	TA00035991A	O RING	1	
7	24311-000380	O-RING, DYNAMIC (Φ38)	1	
8	TA00022496B	LIFT ARM_L	1	
9	TA00022497B	LIFT ARM_R	1	
10	22242-000320	SNAP RING, SHAFT (Φ 32)	2	
11	TA00022966A	ARM, HYDRAULIC	1	
12	22351-060040	PIN, SPRING (6-40)	1	

FIG T093 Branson 2100	93. FEED BACK LEVER	Year/Month 2020/02

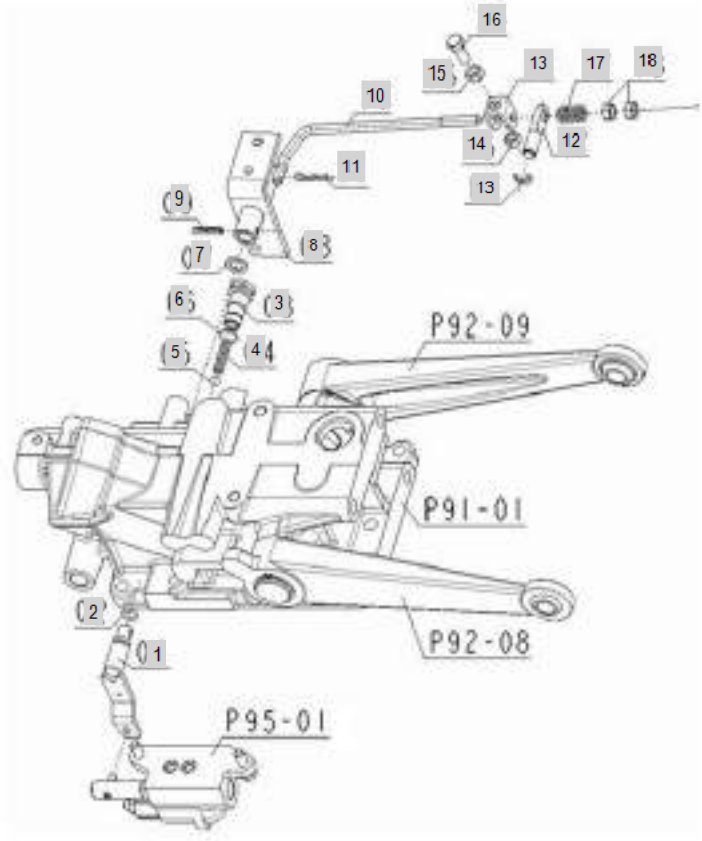

FIG T093 Branson 2100	93. FEED BACK LEVER	Year/Month 2020/02

KeyNo.	Part Number	Part Name	Quantity	Other
1	FEA0010000B	SHAFT, CONTROL LEVER	1	
2	24311-000110	O-RING, DYNAMIC (Φ11)	1	
3	FEA0030000A	PULG	1	
4	FEA0040000A	SPRING	1	
5	24190-100001	Ball, Steel (5/16)	1	
6	24341-000140	O-RING, FIX (Φ14)	1	
7	FEA0070000A	COLLAR, ARM HYD	1	
8	FEA0080000B	ARM, CONTROL LEVER	1	
9	22351-050025	PIN, SPRING (5-02)	1	
10	FEA0100000B	ROD, PEED BACK	1	
11	22360-080000	PIN , SNAP (8Φ)	1	
12	FEA0120000A	PIN, FEED BACK	1	
13	22272-000080	RING, CIRCLIP (Φ 08)	1	
14	FEA0140000A	INTERLOCKER	1	
15	26712-080002	HEX NUT	2	
16	26116-080222	BOLT7T(8X22)	1	
17	FEA0170000A	SPRING, FIEEDBACK	1	
18	26712-080002	HEX NUT	2	

FIG T094 Branson 2100	94. FEED BACK LEVER (POSITION TYPE)	Year/Month 2020/02

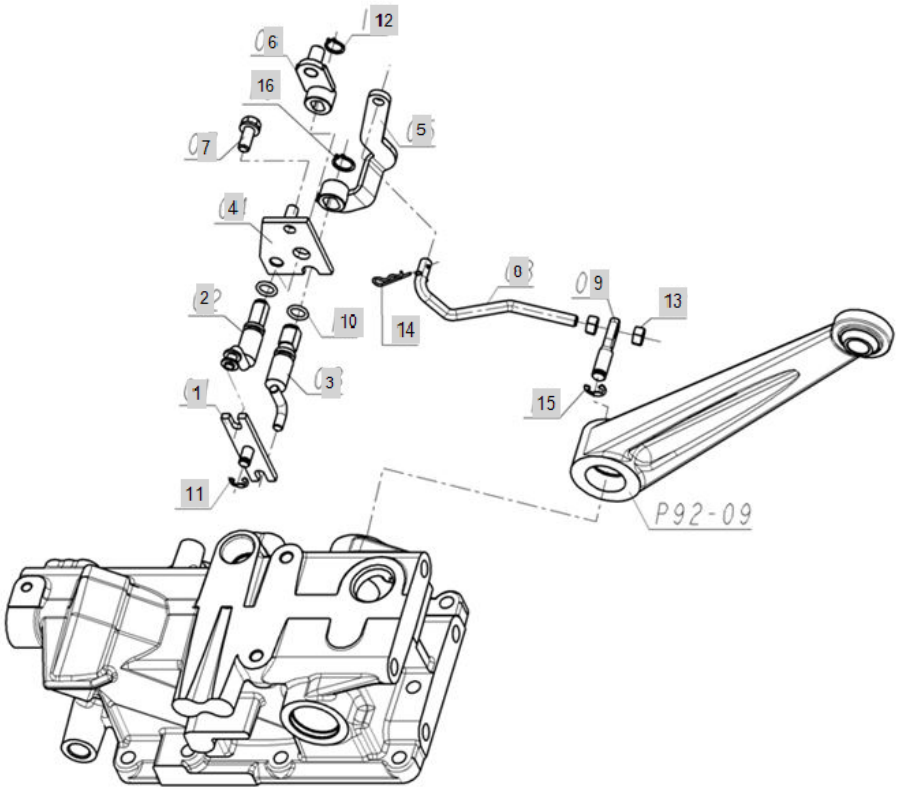

FIG T094 Branson 2100	94. FEED BACK LEVER (POSITION TYPE)	Year/Month 2020/02

KeyNo.	Part Number	Part Name	Quantity	Other
1	TA00018854A	LINK	1	
2	TA00018858A	LEVER, SHIFT CONTROL	1	
3	TA00018862A	SHAFT, FEEDBACK	1	
4	TA00018903A	PLATE ASSY	1	
5	TA00018870B	ARM, FEED BACK	1	
6	TA00018867A	ASS'Y, CONTROL ARM	1	
7	26013-080202	Bolt, Hexa (8-20)	1	
8	TA00018871B	ROD, FEEDBACK	1	
9	FEA0120000A	PIN, FEED BACK	1	
10	24311-000110	O-RING, DYNAMIC (Φ11)	2	
11	22272-000070	RING, CIRCLIP (Φ 07)	1	
12	22242-000120	SNAP RING, SHAFT (Φ 12)	1	
13	26712-080002	HEX NUT	2	
14	22360-080000	PIN , SNAP (8Φ)	1	
15	22272-000080	RING, CIRCLIP (Φ 08)	1	
16	22242-000140	SNAP RING, SHAFT (Φ 14)	1	

FIG T095 Branson 2100	95. CONTROL VALVE	Year/Month 2020/02

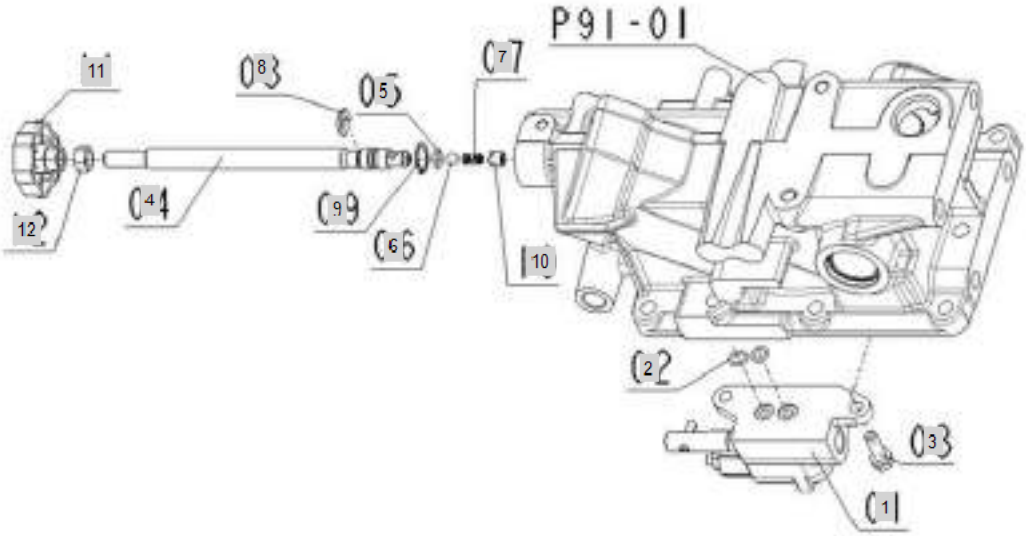

FIG T095 Branson 2100	95. CONTROL VALVE	Year/Month 2020/02

KeyNo.	Part Number	Part Name	Quantity	Other
1	FEA1010000B	CONTROL VALVE ASSY	1	
2	24311-000100	O-RING, DYNAMIC (Φ10)	2	
3	26013-080252	Bolt, Hexa (8-25)	2	
4	FEA1040000B	SHAFT, HYD. ADJUST	1	
5	24311-000100	O-RING, DYNAMIC (Φ10)	1	
6	24190-090001	SGEELBALL9/32	1	
7	FEA1070000A	SPRING	1	
8	FEA1080000A	STOPPER	1	
9	22252-000190	RING, CIRCLIP (Φ 19)	1	
10	FEA1100000A	COLLAR	1	
11	TTA9040000A4	KNOB	1	
12	26716-100002	Nut, Hexa (Φ10)	1	

FIG T096 Branson 2100	96. 3PT LIFT VALVE (POSITION TYPE)	Year/Month 2020/02

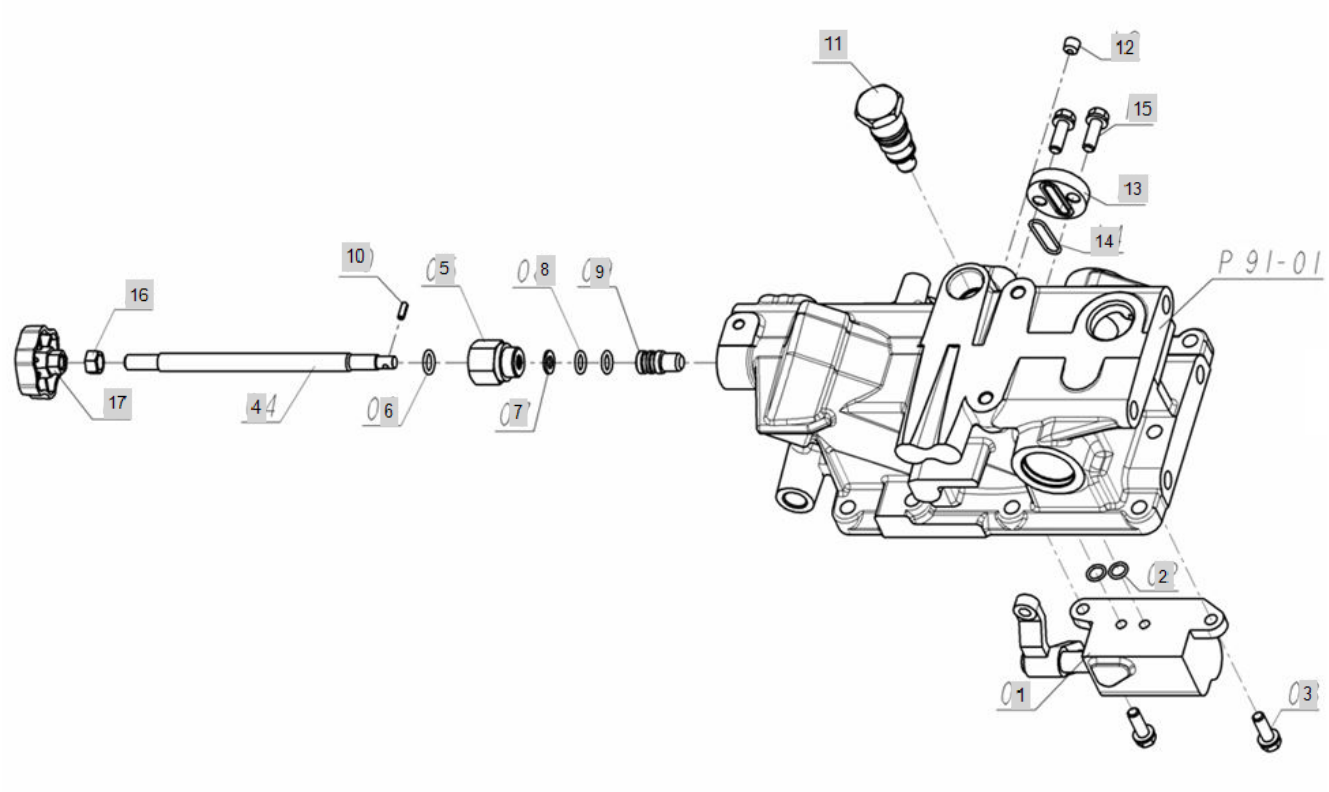

FIG T096 Branson 2100	96. 3PT LIFT VALVE (POSITION TYPE)	Year/Month 2020/02

KeyNo.	Part Number	Part Name	Quantity	Other
1	TA00019098B	CONTROL VALVE, POSITION	1	
2	24311-000100	O-RING, DYNAMIC (Φ10)	2	
3	26013-080252	Bolt, Hexa (8-25)	2	
4	TA00019112A	STOP BOLT	1	
5	TTA9030000A4	HOLDER	1	
6	24311-000120	O-RING, DYNAMIC (Φ12)	1	
7	22117-080000	WASHER, PLAIN (Φ 08)	1	
8	24311-000110	O-RING, DYNAMIC (Φ11)	2	
9	TA00019111A	STOP VALVE	1	
10	22351-040012	PIN, SPRING (4-01)	1	
11	TA00019113A	SAFETY VALVE ASSY	1	
12	23871-010000	PLUG	1	
13	FE92020000B	CAP	1	
14	FE92030000A	O RING	1	
15	26013-080252	Bolt, Hexa (8-25)	2	
16	26716-100002	Nut, Hexa (Φ10)	1	
17	TTA9040000A4	KNOB	1	

FIG T097 Branson 2100	97. LIFT LINK	Year/Month 2020/02

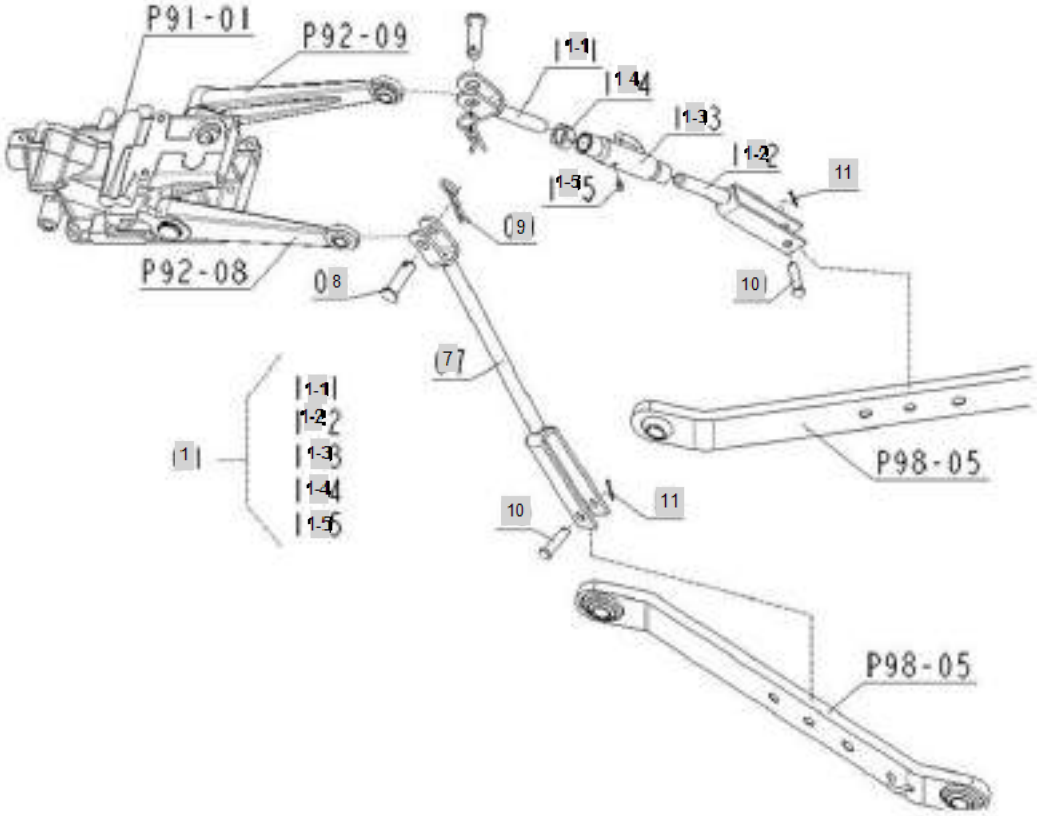

FIG T097 Branson 2100	97. LIFT LINK	Year/Month 2020/02

KeyNo.	Part Number	Part Name	Quantity	Other
1	FEA2010000A	ASS'Y ROD, LIFT RH	1	
1-1	FEA2020000A		1	
1-2	FEA2030000A		1	
1-3	FEA2040000A		1	
1-4	FEA2020100A		1	
1-5	24764-060000	GREASE NIPPLE	1	
7	FEA2070000A	ROD ASS'Y(L), LIFT	1	
8	TZE7300000A4	PIN,LIFTLINK	2	
9	TTE7010000A4	SNAPPIN	2	
10	22486-120350	PIN, HEAD (12-35)	2	
11	22417-250280	PIN , COTTER (2-28)	2	

FIG T098 Branson 2100	98. LIFT ARM	Year/Month 2020/02

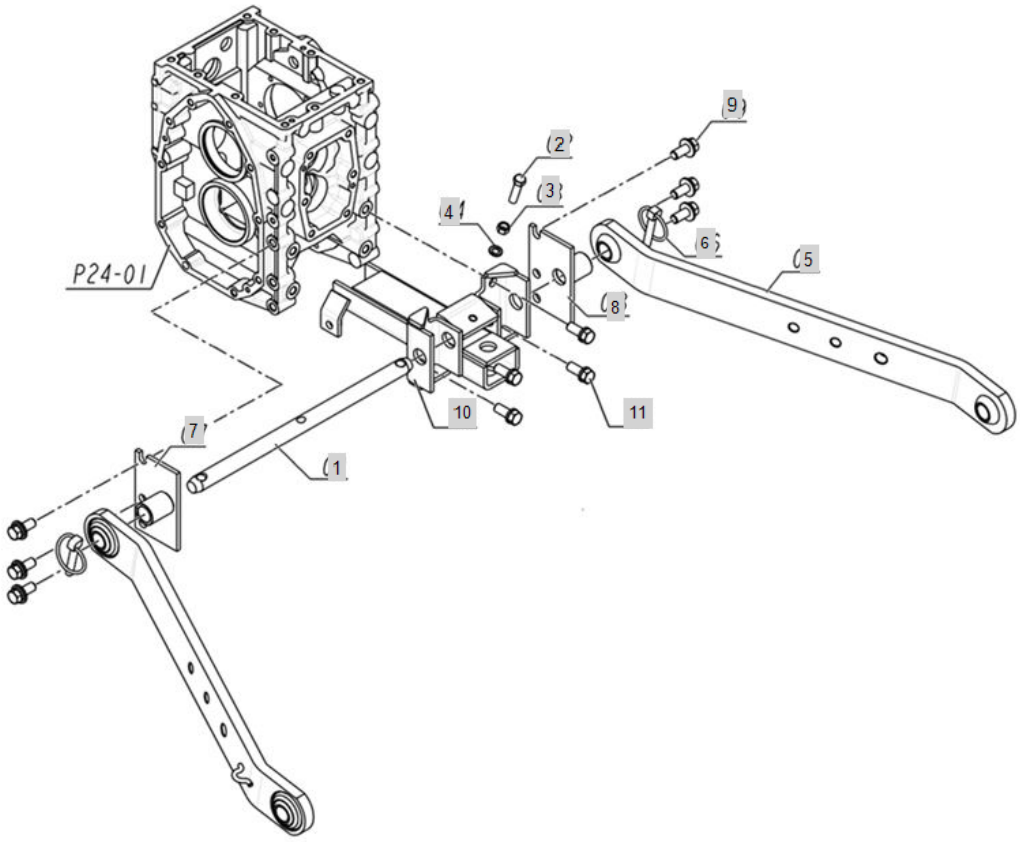

FIG T098 Branson 2100	98. LIFT ARM	Year/Month 2020/02

KeyNo.	Part Number	Part Name	Quantity	Other
1	FEA3010000B	PIN, LOWER LINK	1	
2	26156-100404	BOLT	1	
3	26716-100002	Nut, Hexa (Φ10)	1	
4	22217-100000	WASHER, SPRING (Φ 10)	1	
5	FEA3050000B	COMP. LINK, LOWER	2	
6	TB44030000B4	RING PIN ASSY	2	
7	TA00019170A	SPACER (LH)	1	
8	TA00019171A	SPACER (RH)	1	
9	26014-120302	BOLT	6	
10	FEA7010000B	HITCH FRAME(REAR)	1	
11	26013-120302	HEX BOLT W/WASHER	4	

FIG T099 Branson 2100	99. TOP LINK	Year/Month 2020/02

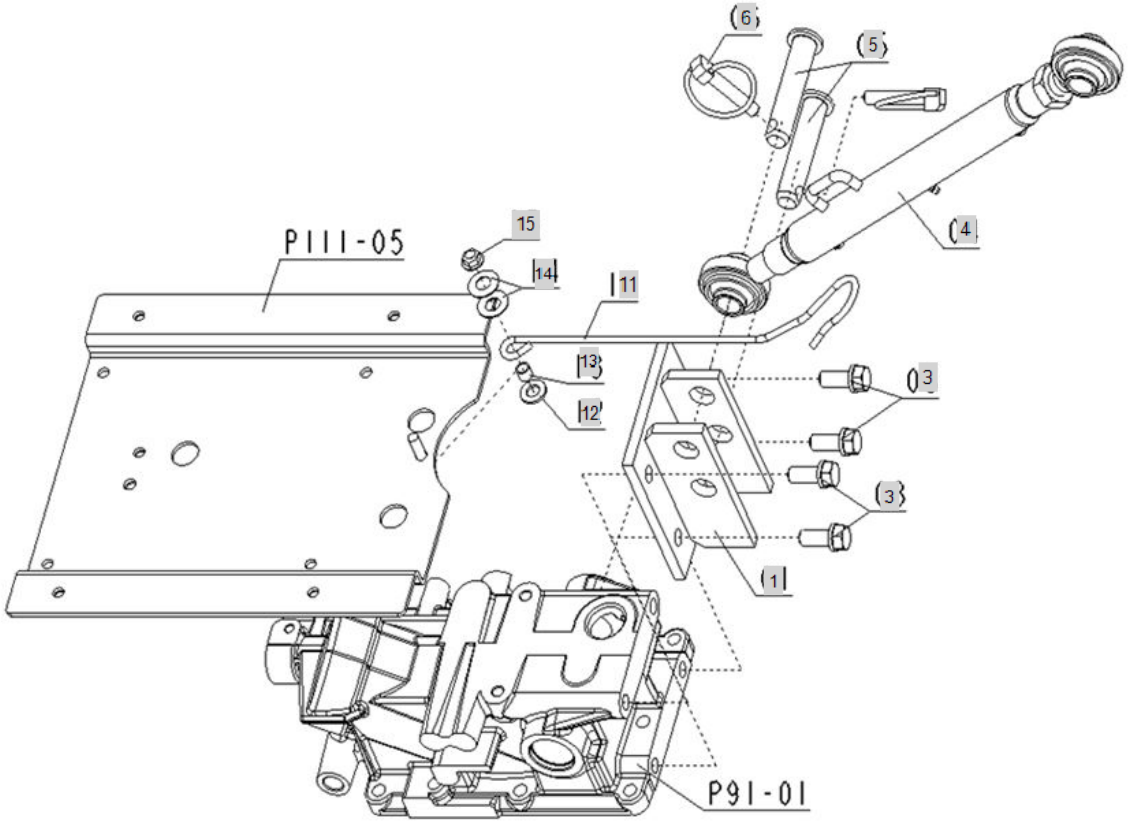

FIG T099 Branson 2100	99. TOP LINK	Year/Month 2020/02

KeyNo.	Part Number	Part Name	Quantity	Other
1	FEA4010000A	BRACKET, TOP LINK LH	1	
3	26013-120302	HEX BOLT W/WASHER	4	
4	FEA4040000A	TOP LINK ASS'Y	1	
5	TTE6130000A4	PIN	2	
6	TJ30110000A4	RING PIN	2	
11	FEA4110000B	HOLDER,TOPLINK	1	
12	22127-100000	WASHER, PLAIN (Φ 10)	1	
13	TCG1160000A4	COLLAR	1	
14	TC94060000A4	PRING12	2	
15	26366-080002	Nut, Hexa (Φ8)	1	

FIG T100 Branson 2100	100. CHECK CHAIN	Year/Month 2020/02

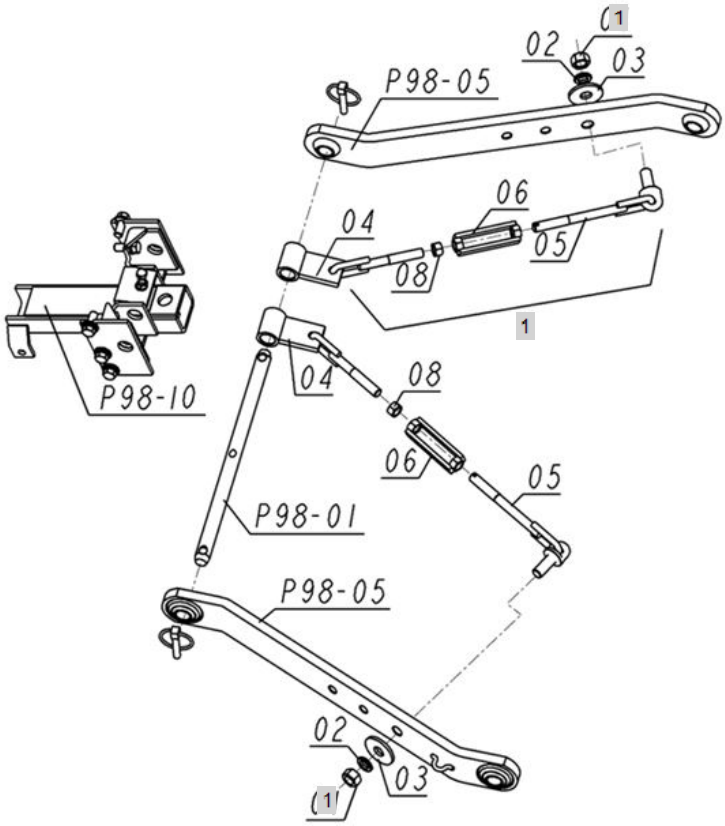

FIG T100 Branson 2100	100. CHECK CHAIN	Year/Month 2020/02

KeyNo.	Part Number	Part Name	Quantity	Other
1	FEA5010000C	STABILIZER LINK ASSY	2	
1)1	26716-160002	NUT	2	
1)2	22217-160000	WASHER, SPRING (Φ 16)	2	
1)3	22157-160000	WASHER, PLAIN (Φ 16)	2	
1)4	FEA5040000B	BRACKET, CHECK CHAIN	2	
1)5	FEA5050000A	BOLT,TURN BUCKLE	2	
1)6	TA00042012A	TURNBUCKLE	0	
1)6-1	FEA5060000A	TURNBUCKLE	2	
1)8	26716-140002	NUT	2	

FIG T101 Branson 2100	101. DRAW BAR	Year/Month 2020/02

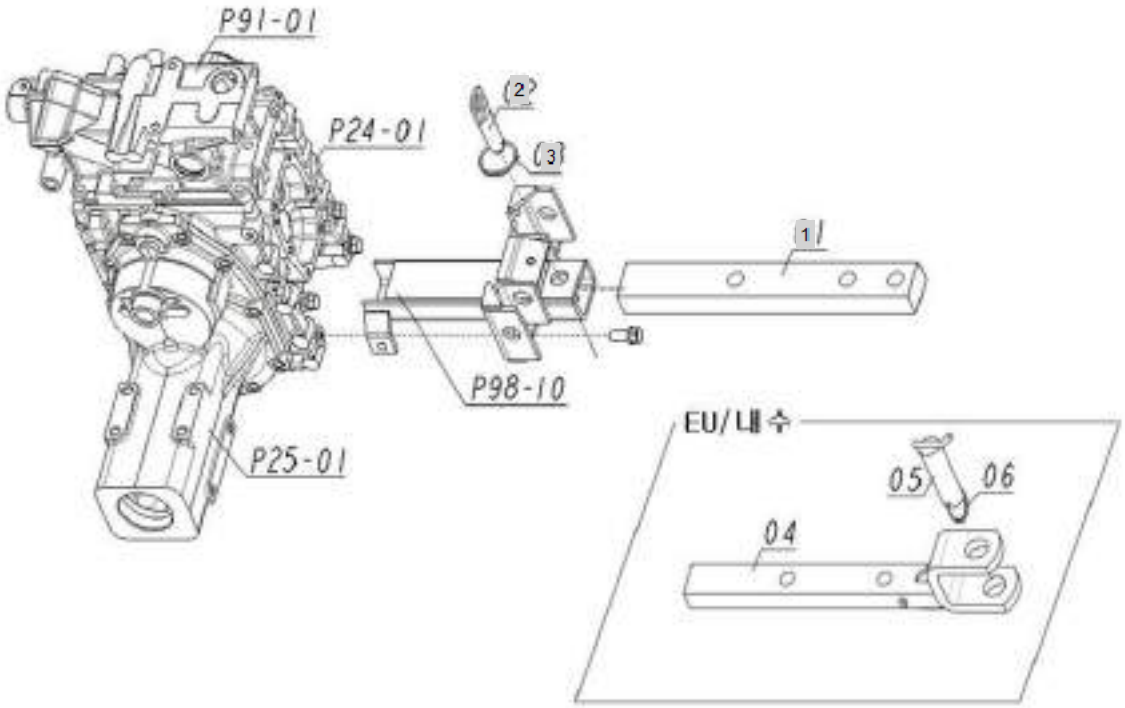

FIG T101 Branson 2100	101. DRAW BAR	Year/Month 2020/02

KeyNo.	Part Number	Part Name	Quantity	Other
1	FEA6010000A	DRAWBAR ASSY	1	
2	FEA6020000A	PIN	1	
3	TB46070000A4	RING	1	

FIG T102 Branson 2100	102. PTO SHEILD	Year/Month 2020/02

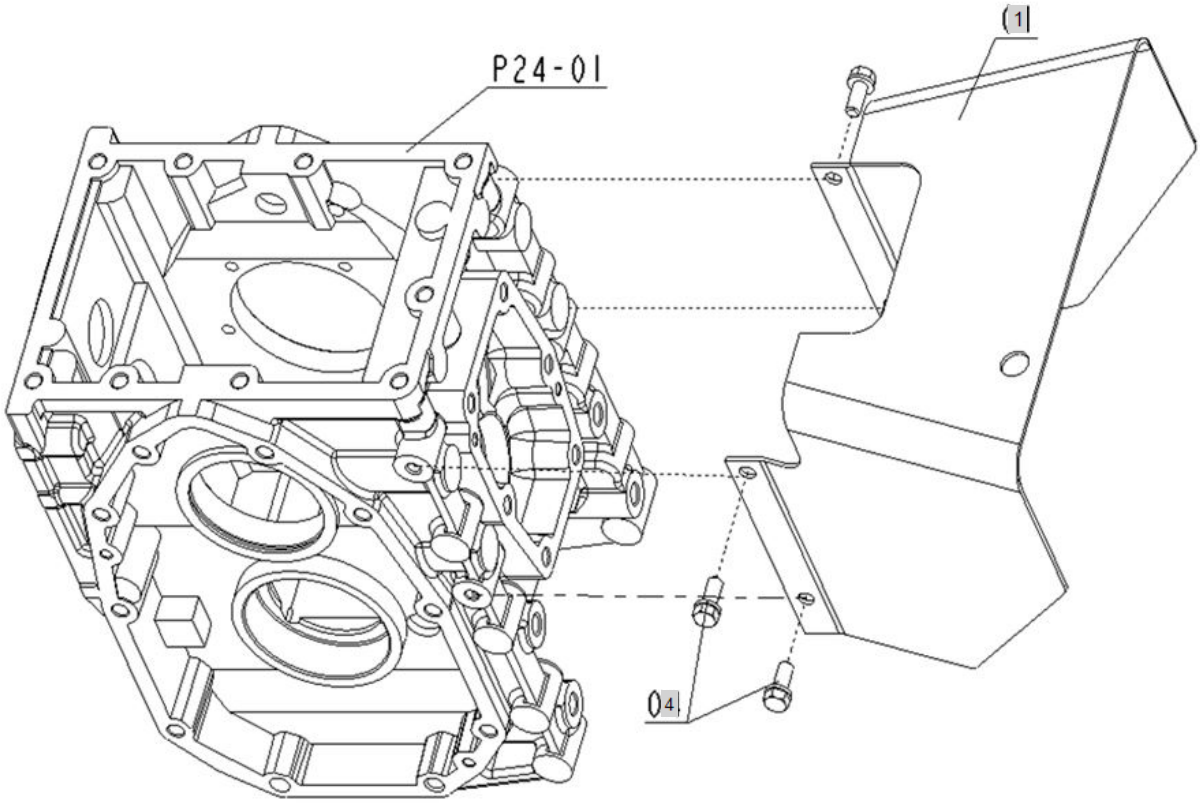

FIG T102 Branson 2100	102. PTO SHEILD	Year/Month 2020/02

KeyNo.	Part Number	Part Name	Quantity	Other
1	FEA8010000A	COVER, PTO	1	
4	26013-080202	Bolt, Hexa (8-20)	4	

FIG T103-1 Branson 2100	103. HOOD	Year/Month 2020/02

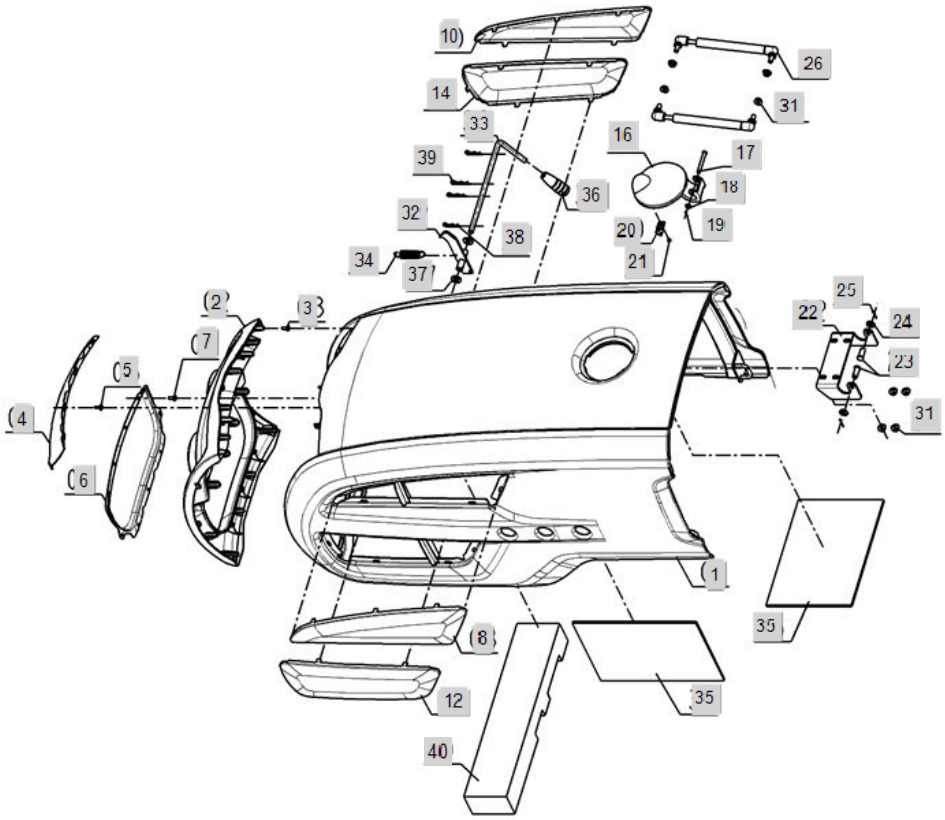

FIG T103-1 Branson 2100	103. HOOD	Year/Month 2020/02

KeyNo.	Part Number	Part Name	Quantity	Other
1	FEB0010000D	HOOD (00 SERIES)	1	
2	FEB0020000A	FRONT MASK -> TA00015768B	2	
3	TTD7090000A4	CROSSRECESSEDHEADTAPPINGSCREW	13	
4	FEB0030000A	COVER (FRONT, UPPER)->TA00015768A	1	
5	TTD7090000A4	CROSSRECESSEDHEADTAPPINGSCREW	8	
6	FEB0040000A	COVER (FRONT, LOWER) -> TA00015768A	1	
7	TTD7090000A4	CROSSRECESSEDHEADTAPPINGSCREW	9	
8	FEB0050100B	COVER(L,U)	2	
10	FEB0060100B	COVER(R,U)	1	
12	FEB0070100B	COVER(L,D)	1	
14	FEB0080100B	COVER(R,D)	1	
16	FEB0090000A	COVER,FUEL FILLER	1	
17	22487-060500	PIN, HEAD (06-50)	1	
18	22127-060000	WASHER, PLAIN (Φ 06)	1	
19	22417-160120	PIN , COTTER (1-12)	1	
20	FEB0100000B	SPRING	1	
21	22587-350102	TAPPING SCREW	1	
22	FEB0110000B	HINGE,BONNET	1	
23	22487-100200	PIN, HEAD (10-20)	2	
24	22117-100000	WASHER, PLAIN (Φ 10)	2	
25	22417-200200	PIN , COTTER (2-20)	2	
26	FEB0120000A	GAS SPRING	2	
31	26366-080002	Nut, Hexa (Φ8)	8	
32	FEB0130000B	HOOK	1	
33	FEB0140000A	LEVER	1	
34	FEB0150000B	SPRING	1	
35	FTD6290000B4	FUSE BOX INSULATION PLATE	2	
36	VD05460000A4	LEVER(BLACK)	1	
37	22127-100000	WASHER, PLAIN (Φ 10)	2	
38	22360-100000	PIN , SNAP (10Φ)	2	
39	22360-120000	PIN , SNAP (2Φ)	2	
40	FEB0160000A	SPONGE, BONNET	1	

FIG T103-2 Branson 2100	103. HOOD	Year/Month 2020/02

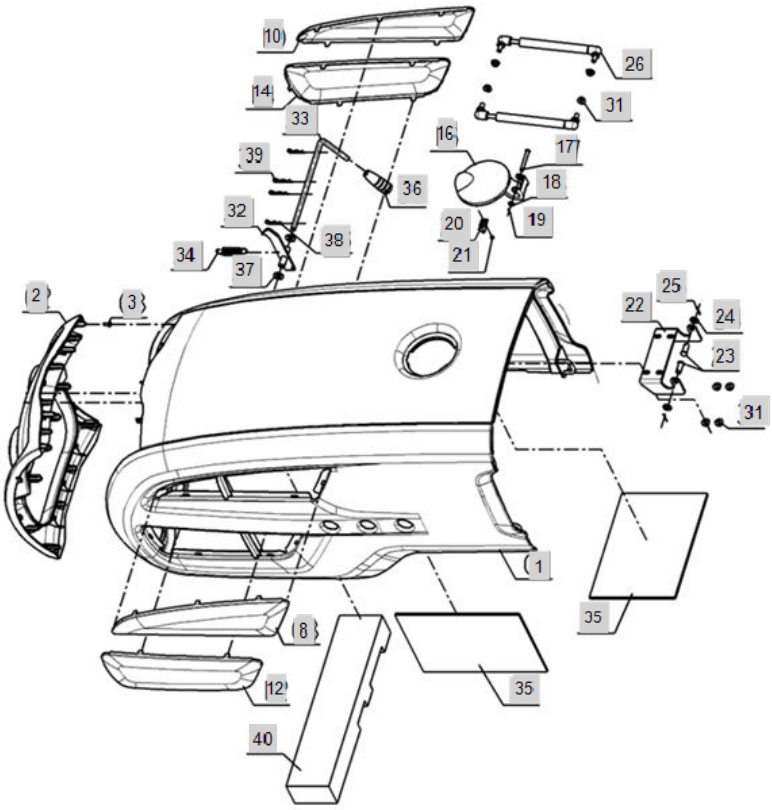

FIG T103-2 Branson 2100	103. HOOD	Year/Month 2020/02

KeyNo.	Part Number	Part Name	Quantity	Other
1	TA00040721A	BONNET FRAME ASS'Y	1	
2	TA00040935A	FRONT MASK ASS'Y	1	
3	TTD7090000A4	CROSSRECESSEDHEADTAPPINGSCREW	11	
8	FEB0050100B	COVER(L,U)	1	
10	FEB0060100B	COVER(R,U)	1	
12	FEB0070100B	COVER(L,D)	1	
14	FEB0080100B	COVER(R,D)	1	
16	FEB0090000A	COVER,FUEL FILLER	1	
17	22487-060500	PIN, HEAD (06-50)	1	
18	22127-060000	WASHER, PLAIN (Φ 06)	1	
19	22417-160120	PIN , COTTER (1-12)	1	
20	FEB0100000B	SPRING	1	
21	22587-350102	TAPPING SCREW	1	
22	FEB0110000B	HINGE,BONNET	1	
23	22487-100200	PIN, HEAD (10-20)	2	
24	22117-100000	WASHER, PLAIN (Φ 10)	2	
25	22417-200200	PIN , COTTER (2-20)	2	
26	FEB0120000A	GAS SPRING	2	
31	26366-080002	Nut, Hexa (Φ8)	8	
32	FEB0130000B	HOOK	1	
33	FEB0140000A	LEVER	1	
34	FEB0150000B	SPRING	1	
35	FTD6290000B4	FUSE BOX INSULATION PLATE	2	
36	VD05460000A4	LEVER(BLACK)	1	
37	22127-100000	WASHER, PLAIN (Φ 10)	2	
38	22360-100000	PIN , SNAP (10Φ)	2	
39	22360-120000	PIN , SNAP (2Φ)	2	
40	FEB0160000A	SPONGE, BONNET	1	

FIG T104 Branson 2100	104. PANEL COVER	Year/Month 2020/02

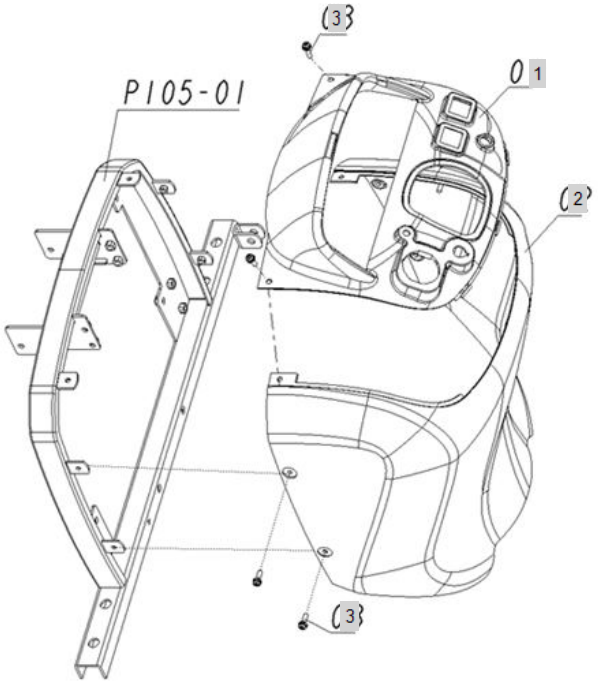

FIG T104 Branson 2100	104. PANEL COVER	Year/Month 2020/02

KeyNo.	Part Number	Part Name	Quantity	Other
1	FEB1010000A	COVER,PANNEL (UPPER)	1	
2	FEB1020000A	COVER,PANNEL	1	
3	TCE9010000A4	BOLT	6	

FIG T105 Branson 2100	105. SHUTTER PLATE	Year/Month 2020/02

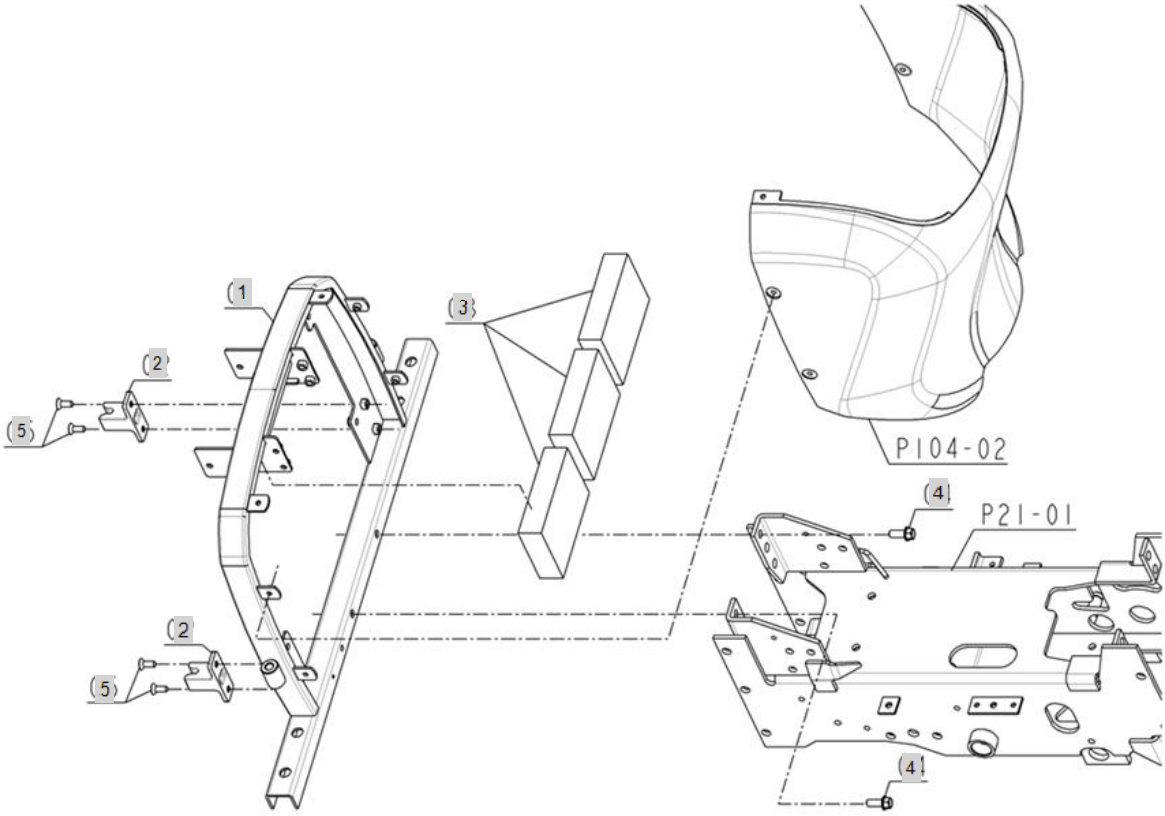

FIG T105 Branson 2100	105. SHUTTER PLATE	Year/Month 2020/02

KeyNo.	Part Number	Part Name	Quantity	Other
1	TA00016843C	PILLAR, CENTER	1	
2	FEB3020000A	HOOK	2	
3	FEB3030000A	SPONGE	3	
4	26013-100252	SCREW,CAPTIVEWASHERCAP	2	
5	26577-080202	SCREW FLAT HEAD	4	

FIG T106 Branson 2100	106. LEVER GUIDE	Year/Month 2020/02

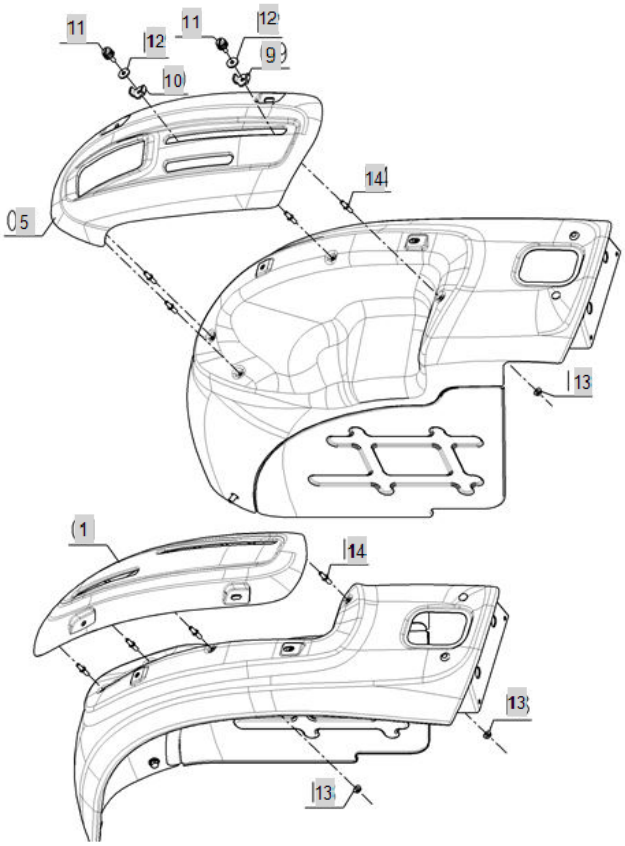

FIG T106 Branson 2100	106. LEVER GUIDE	Year/Month 2020/02

KeyNo.	Part Number	Part Name	Quantity	Other
1	FEB4010000A	GUIDE(L), LEVER	1	
5	FEB4050000A	GUIDE(R),LEVER	1	
9	TA00016323A	HOLDER, HYD LEVER	1	
10	FEB4100000A	HOLDER,HYD.LEVERUP	1	
11	CE68060000A4	HANDLEBOLT6*15	2	
12	22157-060000	WASHER, PLAIN (Φ 06)	2	
13	26366-060002	Nut, Hexa (Φ6)	8	
14	TA00001332A	INSERT BOLT(M6)	8	

FIG T108 Branson 2100	108. FENDER	Year/Month 2020/02

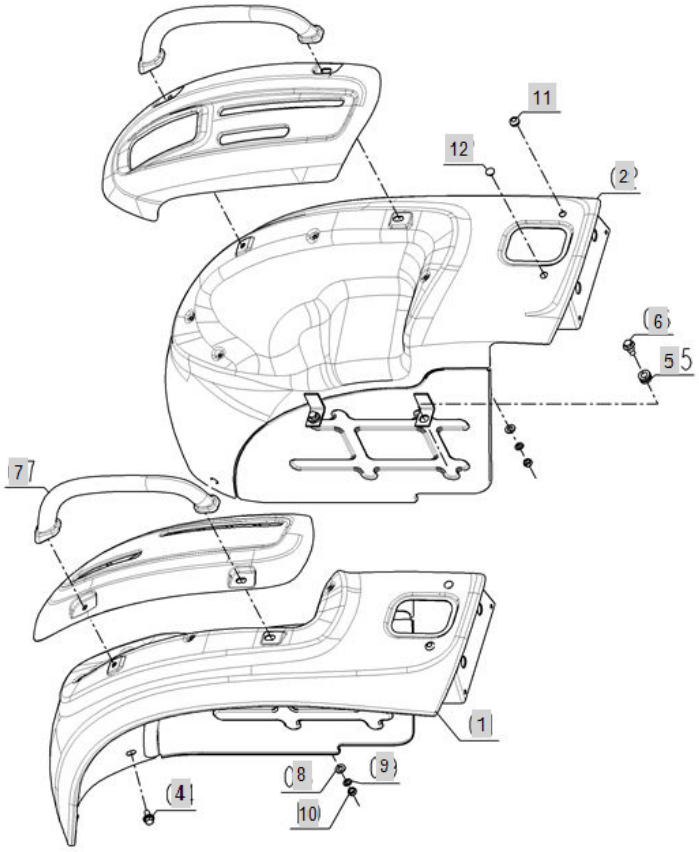

FIG T108 Branson 2100	108. FENDER	Year/Month 2020/02

KeyNo.	Part Number	Part Name	Quantity	Other
1	FEB6010000B	FENDER(L) ASS'Y	1	
2	FEB6020000B	FENDER(R) ASS'Y	1	
4	26014-080202	Bolt, Hexa (8-20)	4	
5	FEB6050000A	CUSHION	4	
6	FEB6060000A	BOLT	4	
7	FEB6070000A	HANDRAIL	2	
8	22127-080000	WASHER, PLAIN (D80)	4	
9	22217-080000	WASHER, SPRING (Φ 08)	4	
10	26716-080002	NUT,HEX (D8)	4	
11	TB40280000A4	GROMET 8	2	
12	TTD6650000A4	RUBBER	2	

FIG T109 Branson 2100	109. FENDER STAY	Year/Month 2020/02

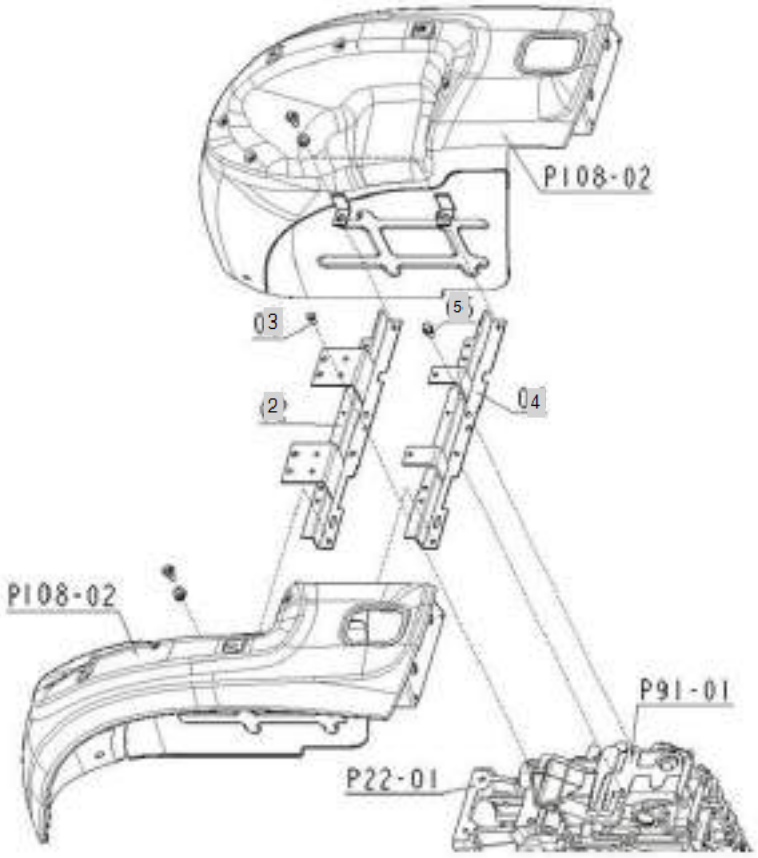

FIG T109 Branson 2100	109. FENDER STAY	Year/Month 2020/02

KeyNo.	Part Number	Part Name	Quantity	Other
2	FEB7020000D	STAY, FENDER	1	
3	26013-080182	SCREW,CAPTIVEWASHERCAP	1	
4	FEB7040000B		1	
5	26013-100202	BOLT(+SW)	2	

FIG T110 Branson 2100	110. FLOOR SEAT	Year/Month 2020/02

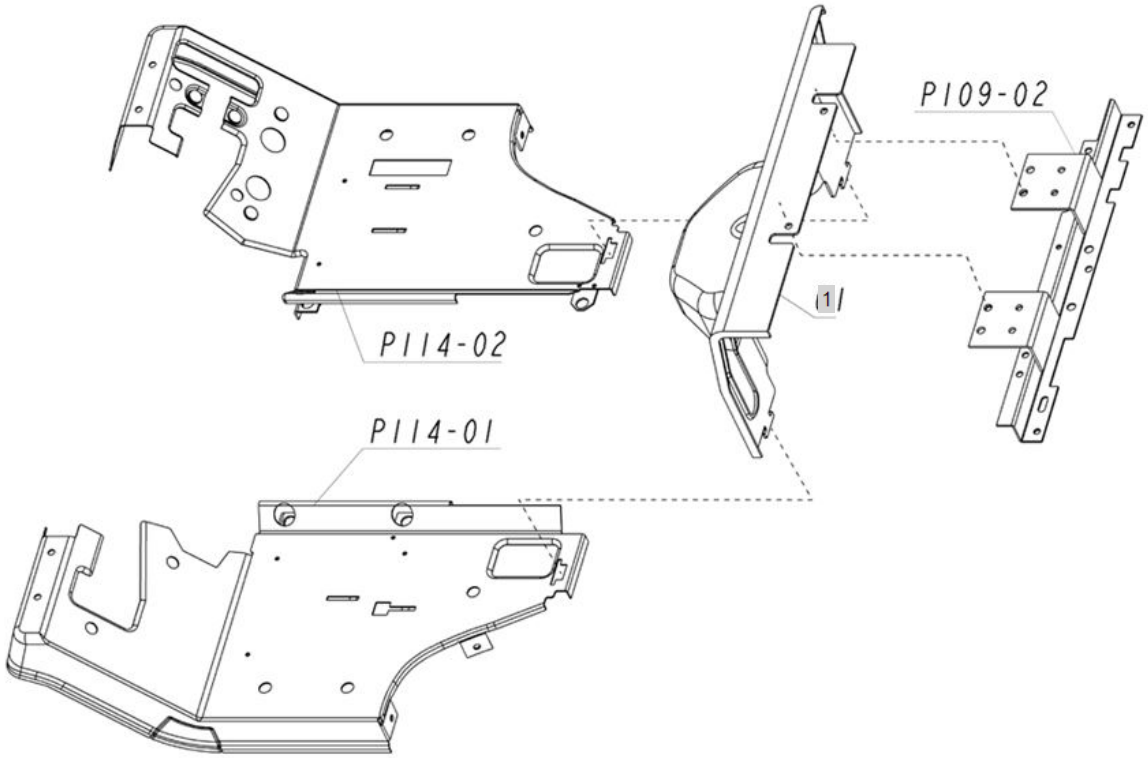

FIG T110 Branson 2100	110. FLOOR SEAT	Year/Month 2020/02

KeyNo.	Part Number	Part Name	Quantity	Other
1	FEB8010000B		1	

FIG T111 Branson 2100	111. SEAT	Year/Month 2020/02

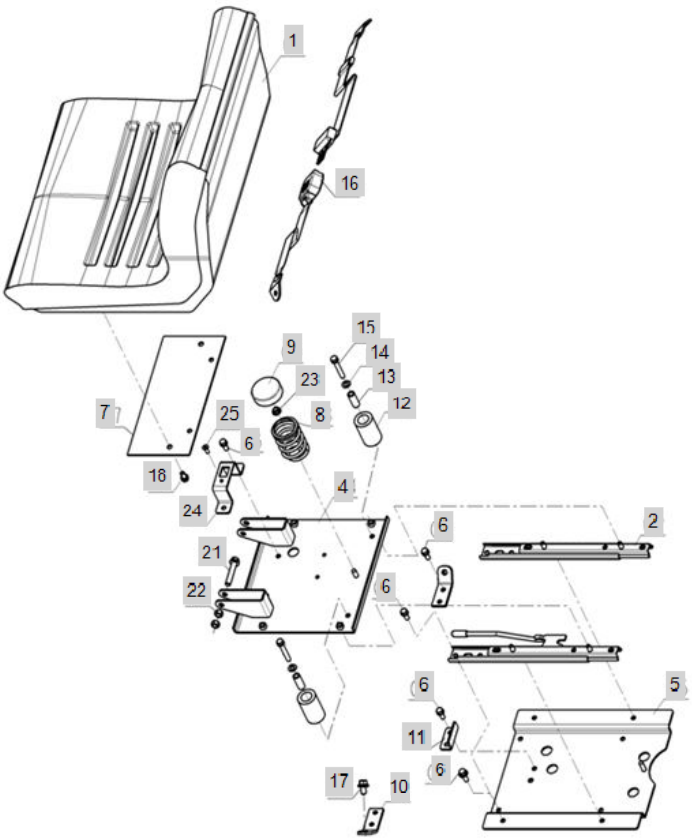

FIG T111 Branson 2100	111. SEAT	Year/Month 2020/02

KeyNo.	Part Number	Part Name	Quantity	Other
1	FEB9010000A	SEAT ASS'Y	1	
2	FEB9020000A	RAIL, SEAT ASS'Y	1	
4	FEB9040000B		1	
5	FEB9050000B		1	
6	26013-080202	Bolt, Hexa (8-20)	14	
7	FEB9070000B	STAY ASS'Y(UPPER),SEAT	1	
8	FEB9080000A	CHAIR SPING	1	
9	FEB9090000A	CAP, SPRING	1	
10	FEB9100000A	BRACKET, SEAT BELT	2	
11	FEB9110000A		1	
12	RR59030000A4	RUBBER,CUSION	2	
13	RR59040000A4	COLLAR9*14*35	2	
14	22127-080000	WASHER, PLAIN (D80)	2	
15	26013-080552	SCREW,CAPTIVEWASHERCAP	2	
16	TTE0230000B3	SEAT SAFETY BELT	1	
17	26014-100202	Bolt, Hexa (10-20)	2	
18	26013-080162	Bolt, Hexa (8-16)	4	
21	26106-100552	BOLT	2	
22	26716-100002	Nut, Hexa (Φ10)	4	
23	26366-080002	Nut, Hexa (Φ8)	1	
24	FEB9120000A		1	
25	26577-060162		1	

FIG T112 Branson 2100	112. SEAT - EU	Year/Month 2020/02

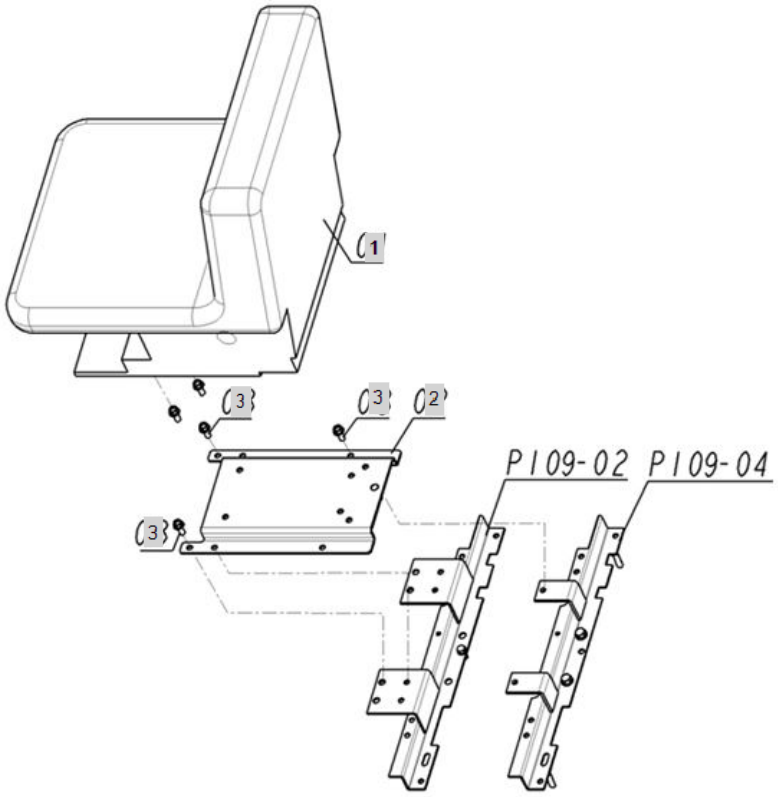

FIG T112 Branson 2100	112. SEAT - EU	Year/Month 2020/02

KeyNo.	Part Number	Part Name	Quantity	Other
1	TA00016942A	SEAT(EU)	1	
2	TA00017084B	SEAT STAY (BOTTOM) ASSY	1	
3	26106-080202	SQR FLANGE BOLT	12	

FIG T114 Branson 2100	114. STEP	Year/Month 2020/02

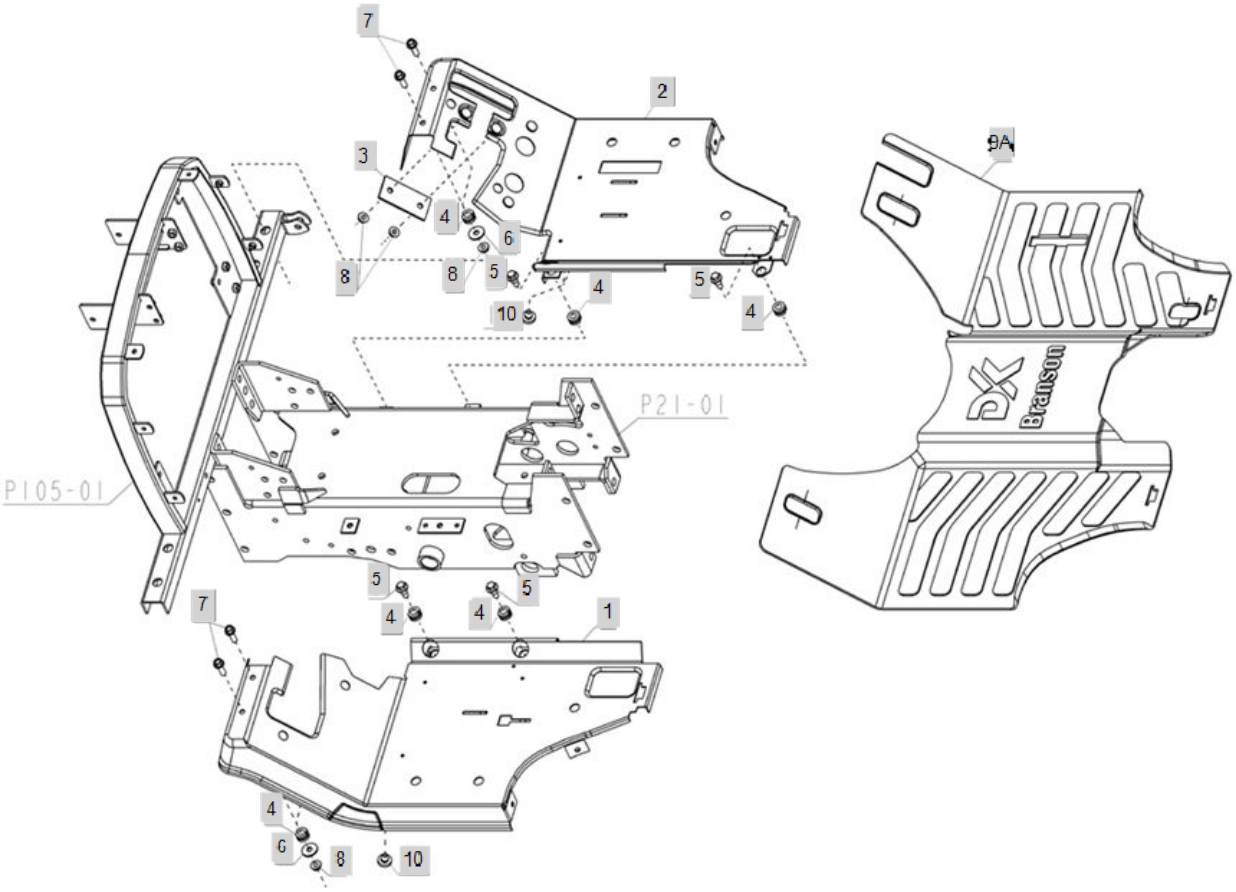

FIG T114 Branson 2100	114. STEP	Year/Month 2020/02

KeyNo.	Part Number	Part Name	Quantity	Other
1	FEC0010000B	STEP(L)	1	
2	FEC0020000E	STEP RH	1	
3	FEC0030000A	SUPPORT, STEP RH	1	
4	FEB6050000A	CUSHION	8	
5	FEB6060000A	BOLT	4	
6	22157-080000	WASHER, PLAIN (Φ 08)	4	
7	26106-080252	SCREW,HEXFLANGEHEADCAP	4	
8	26366-080002	Nut, Hexa (Φ8)	6	
9A	FEC0100000B		1	
9B	TA00017589B	STEP MAT	1	
10	RRB9260000A4	STOPER, VERTICAL FEED CAM	3	

FIG T115 Branson 2100	115. ROPS	Year/Month 2020/02

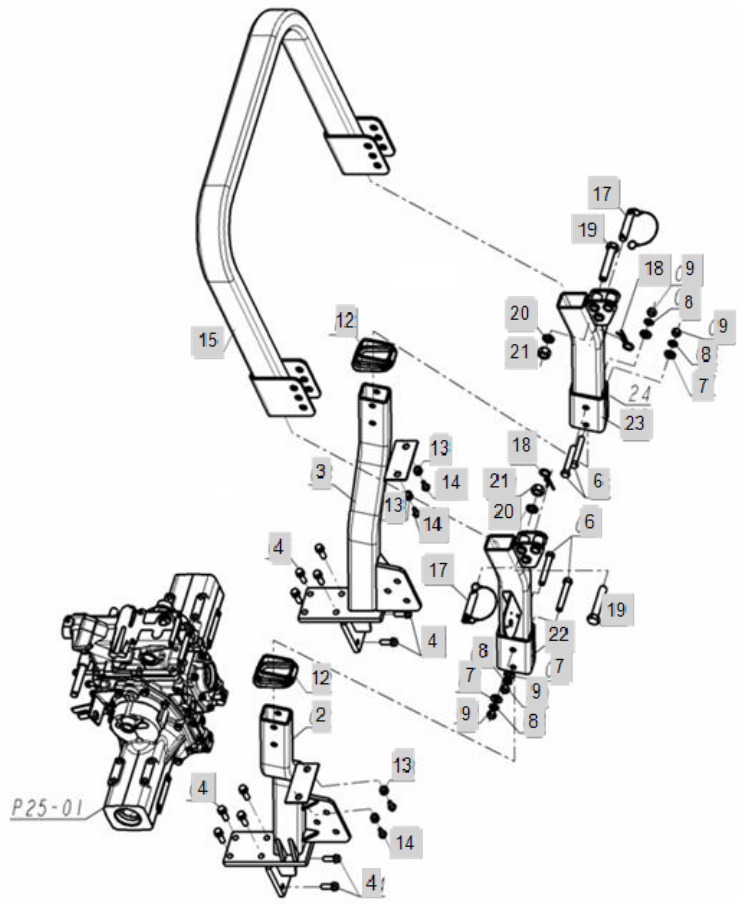

FIG T115 Branson 2100	115. ROPS	Year/Month 2020/02

KeyNo.	Part Number	Part Name	Quantity	Other
2	FEC1020000B		1	
3	FEC1030000B		1	
4	26013-120352	SCREW,CAPTIVEWASHERCAP	12	
6	26116-140902	HEX BOLT	4	
7	22127-140000	WASHER, PLAIN (Φ 14)	4	
8	22217-140000	WASHER, SPRING (Φ 14)	4	
9	26716-140002	NUT	4	
12	FEC1220000A	COVER, ROPS	2	
13	FEB6050000A	CUSHION	4	
14	FEB6060000A	BOLT	4	
15	FEC2010000C	UPPER FRAME ASS'Y	1	
17	NTF8400000A3	ROPSPIN	2	
18	TTE7010000A4	SNAPPIN	2	
19	26116-181002	BOLT	2	
20	22217-180000	WASHER, SPRING (Φ 18)	2	
21	26347-180002	NUT	2	
22	TA00016844B	MIDDLE FRAME	1	
23	TA00016845B	MIDDLE FRAME R	1	

FIG T116 Branson 2100	116. MID ROPS - PO	Year/Month 2020/02

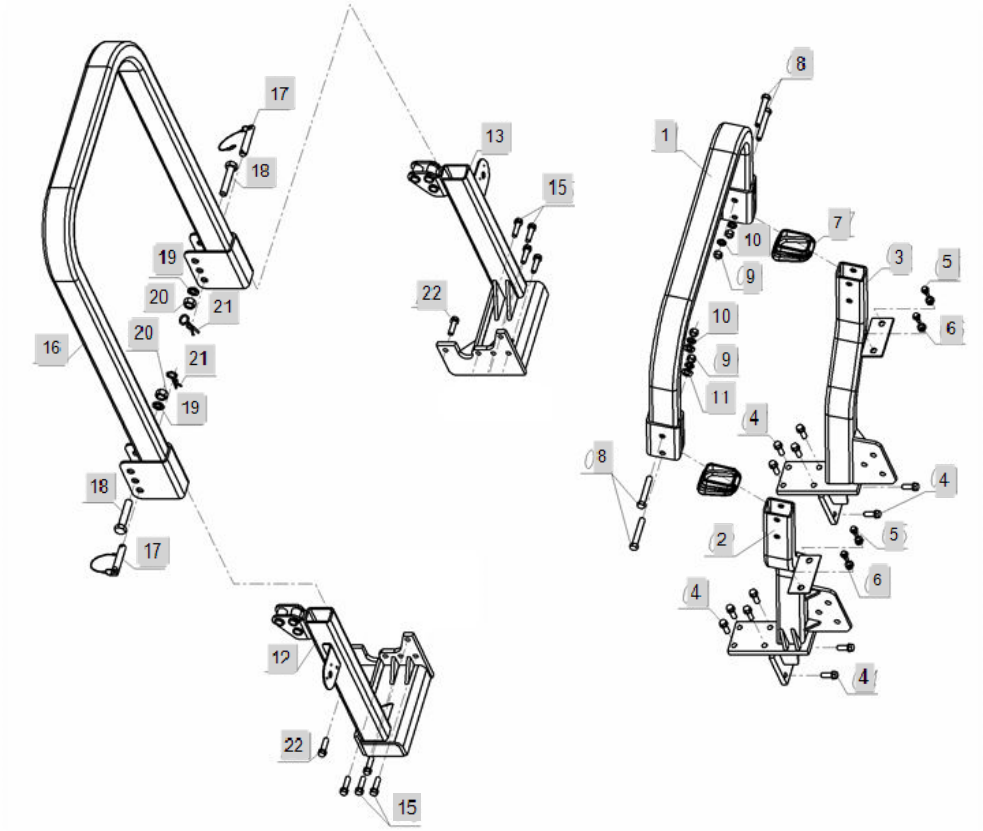

FIG T116 Branson 2100	116. MID ROPS - PO	Year/Month 2020/02

KeyNo.	Part Number	Part Name	Quantity	Other
1	TA00018578A	FRAME REAR	1	
2	FEC1020000B		1	
3	FEC1030000B		1	
4	26013-120352	SCREW,CAPTIVEWASHERCAP	12	
5	FEB6060000A	BOLT	4	
6	FEB6050000A	CUSHION	4	
7	FEC1220000A	COVER, ROPS	2	
8	26116-140902	HEX BOLT	4	
9	26716-140002	NUT	4	
10	22217-140000	WASHER, SPRING (Φ 14)	4	
11	22127-140000	WASHER, PLAIN (Φ 14)	4	
12	TA00018584A	FRAME_MID ROPS	1	
13	TA00018585A	FRAME MID ROPS	1	
15	26013-120452	Bolt	8	
16	TA00018576A	UPPER FRAME MID ROPS	1	
17	NTF8400000A3	ROPSPIN	2	
18	16116-180902		2	
19	22217-180000	WASHER, SPRING (Φ 18)	2	
20	26347-180002	NUT	2	
21	TTE7010000A4	SNAPPIN	2	
22	26013-120352	SCREW,CAPTIVEWASHERCAP	2	

FIG T117 Branson 2100	117. SMV BRACKET	Year/Month 2020/02

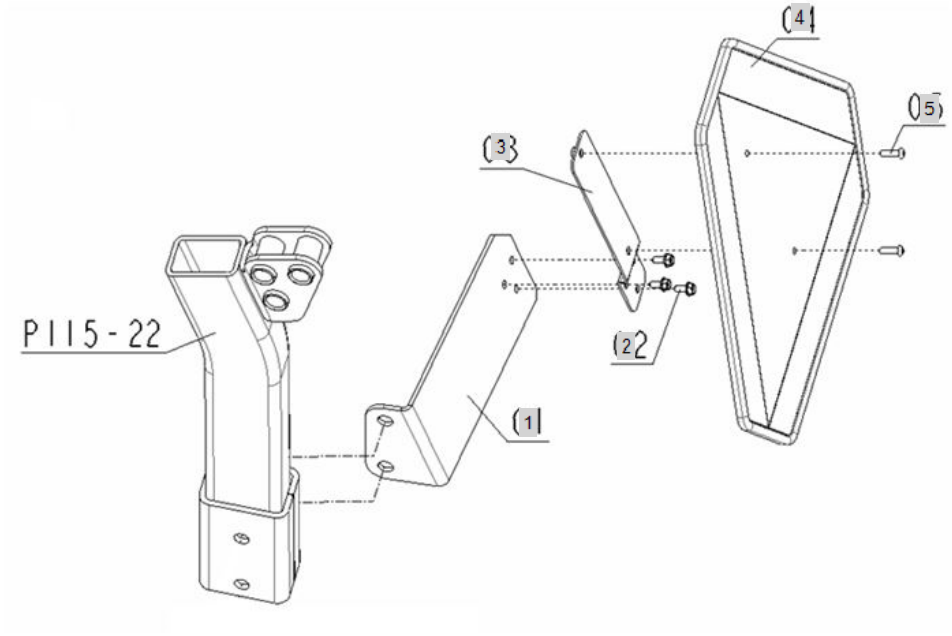

FIG T117 Branson 2100	117. SMV BRACKET	Year/Month 2020/02

KeyNo.	Part Number	Part Name	Quantity	Other
1	FEC3010000A	BRACKET,SMV	1	
2	26106-060142	BOLT	3	
3	TZE1040003B3	SMV BRACKET ASS'Y	1	
4	FEC3020000A		1	
5	26557-060202	SCREW	2	

FIG T118 Branson 2100	118. NAME PLATE LAMP ASSY - EU	Year/Month 2020/02

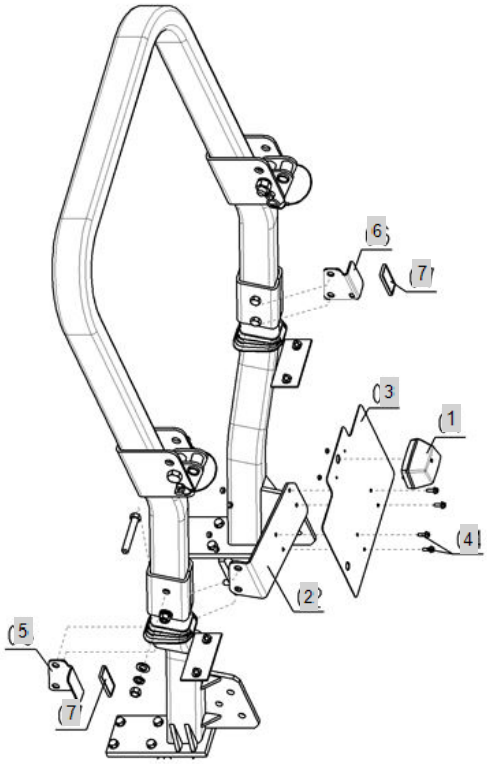

FIG T118 Branson 2100	118. NAME PLATE LAMP ASSY - EU	Year/Month 2020/02

KeyNo.	Part Number	Part Name	Quantity	Other
1	FBK182000EA3	NUMBER PLATE LAMP	1	
2	TA00016925C	BRAKET(NAMEPLATE)ASS'Y	1	
3	TA00018438A	BRAKET NAMEPLATE LAMP	1	
4	26106-060182	Bolt, Hexa (6-18)	4	
5	TA00016969A	REFLECTOR BRAKET	1	
6	TA00017159A	REFLECTER BRAKET(R)	1	
7	FBD220000EA4	REFLECTOR	2	

FIG T119 Branson 2100	119. 작업등 조합	Year/Month 2020/02

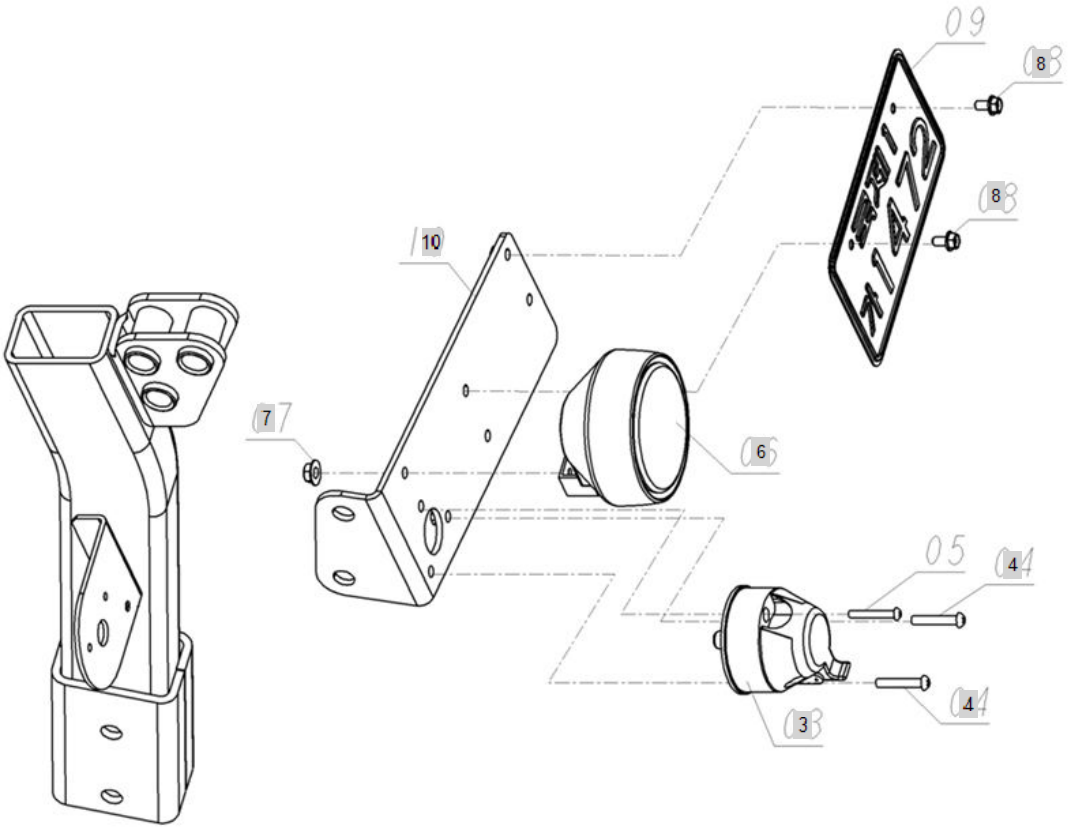

FIG T119 Branson 2100	119. 작업등 조합	Year/Month 2020/02

KeyNo.	Part Number	Part Name	Quantity	Other
3	TZB9440000A3	TRAILERSOCKET	1	
4	26557-060352	SCREW,+GROOVE	3	
6	CEG6250000A2	Lamp Ass'y, Working	1	
7	26367-080002	HEX FLANGE NUT (Φ8)	1	
8	26106-060122	HEX BOLT (6-12)	2	
10	TA00016925C	BRAKET(NAMEPLATE)ASS'Y	1	

FIG T120A Branson 2100	120. FRONT WHEEL	Year/Month 2020/02

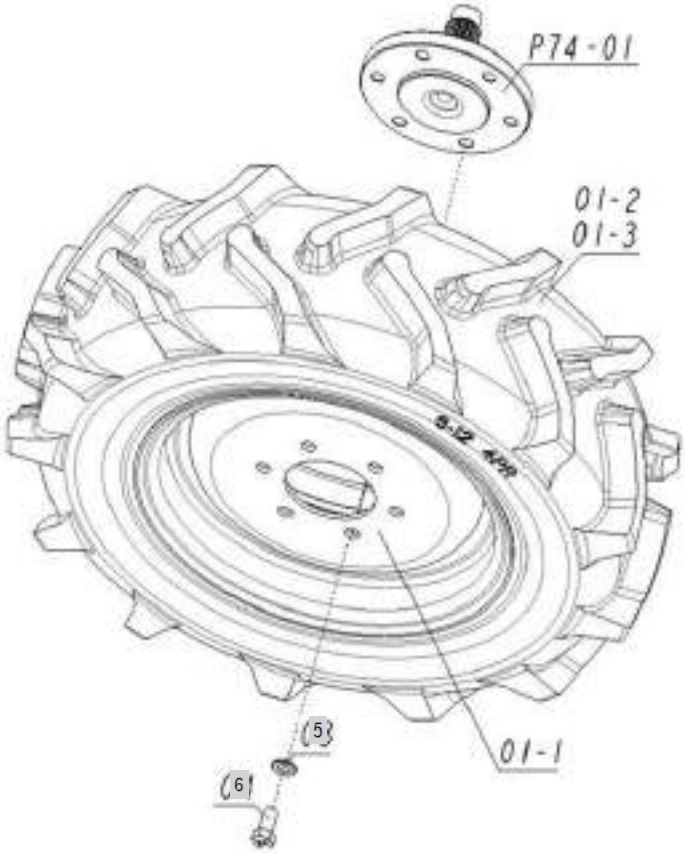

FIG T120A Branson 2100	120. FRONT WHEEL	Year/Month 2020/02

KeyNo.	Part Number	Part Name	Quantity	Other
1	FEC4020000A	AG TIRE, FRONT LH 6-12	1	
1-1	FEC4030000B	WHEEL ASSY	1	
1-2	FEC4040000A		1	
1-3	FEC4050000A		1	
2	FEC4060000A		1	
2-1	FEC4030000B	WHEEL ASSY	1	
2-2	FEC4040000A		1	
2-3	FEC4050000A		1	
3	22217-120000	WASHER, SPRING (Φ 12)	12	
4	FEC4090000A	BOLT	12	
5	TA00019287A	EC TYPE WHEEL ASSY (AGRI)	2	

FIG T121A Branson 2100	121. REAR WHEEL	Year/Month 2020/02

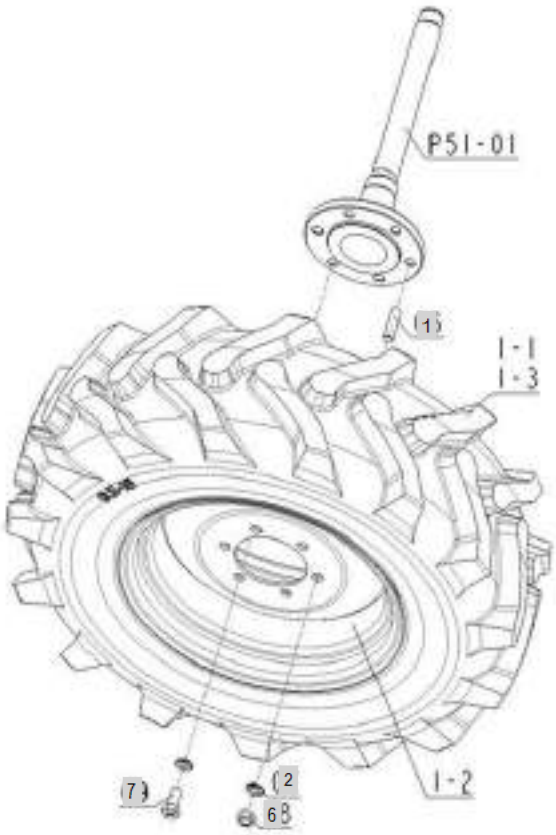

FIG T121A Branson 2100	121. REAR WHEEL	Year/Month 2020/02

KeyNo.	Part Number	Part Name	Quantity	Other
1	TC63050000A9	FRONT WHEEL (L) ASSY	1	
1-1	TC63050200A3		1	
1-2	TC63050100A2	wheel ass'y	1	
1-3	TC63050202A9	TUBE 9.5-16	1	
2	TC63060000A9		1	
2-1	TC63050200A3		1	
2-2	TC63050100A2	wheel ass'y	1	
2-3	TC63050202A9	TUBE 9.5-16	1	
6	26236-160282	BOLT,STUD	4	
7	22217-160000	WASHER, SPRING (Φ 16)	12	
8	26736-160002	HEXNUT	4	
9	FT24400000A	BOLT -> FT24400000A4	8	
7	TA00018665B	WHEEL ASS'Y	2	

FIG T122.1-1A Branson 2100	122. DECAL	Year/Month 2020/02

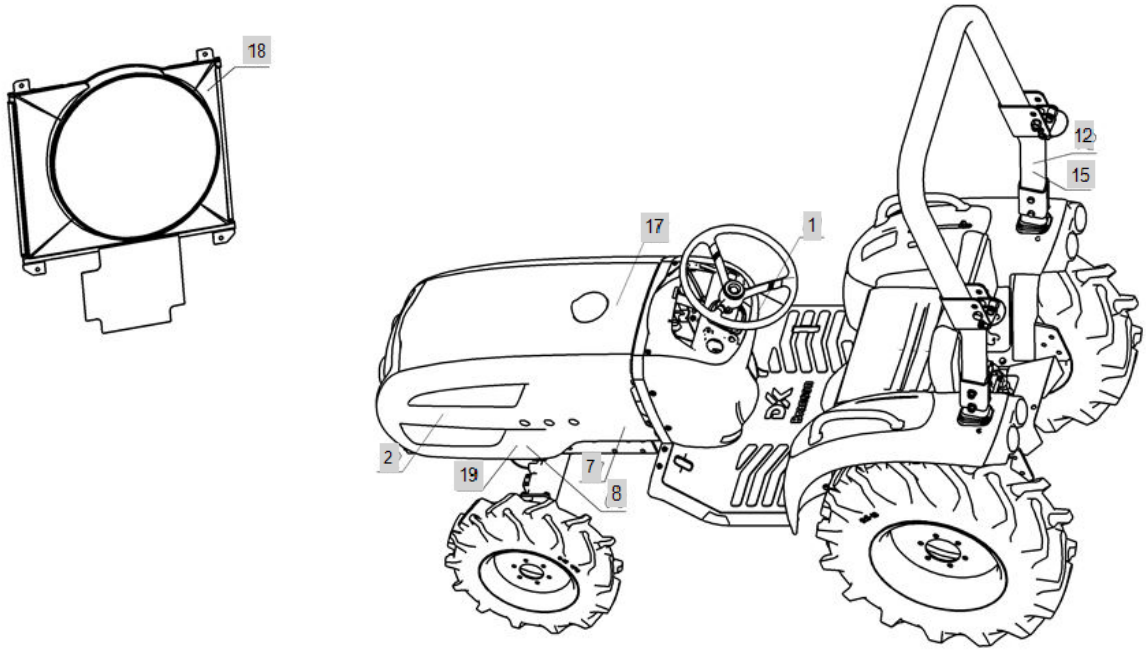

FIG T122.1-1A Branson 2100	122. DECAL	Year/Month 2020/02

KeyNo.	Part Number	Part Name	Quantity	Other
1	TZE4330000B4	MARK, MAIN SWITCH	1	
2	TA00016128A	BONNET LABEL, 2100	2	
5	TZE4150000A4	LABEL, PAKING BRAKE	1	
7	NTE5270000A4	NAME PLATE, WARNING(STARTER RELAY)	1	
8	TZE5110000B4	NAMEPLATE,STARTERWARNING	1	
9	TA00016518A	CAUTION DECAL	1	
10	TA00016517A	WARNNING DECAL	1	
11	NTE5220000C4	NAMEPLATE,DANGER	1	
12	TZE5170000B3	NAME PLATE, ROPS CAUTION	1	
12-1	TA00016829A	ROPS LABEL	1	
15	NTE5210000C4	NAMEPLATE,SAFETY	1	
17	TZE4190000C4	LABEL, FUEL CAUTION	1	
18	TZE5180000C4	NAME PLATE, REVOLUTION	1	
19	TZE5130000C4	NAME PLATE, CAUTION	1	
20	TZE4130000B4	LABEL,DIFFERENTIAL	1	
21	TA00016129A	LABEL(2100)	1	
22	NTE4930000A3	SIDE NAMEPLATE	1	

FIG T122.1-2A Branson 2100	122. DECAL	Year/Month 2020/02

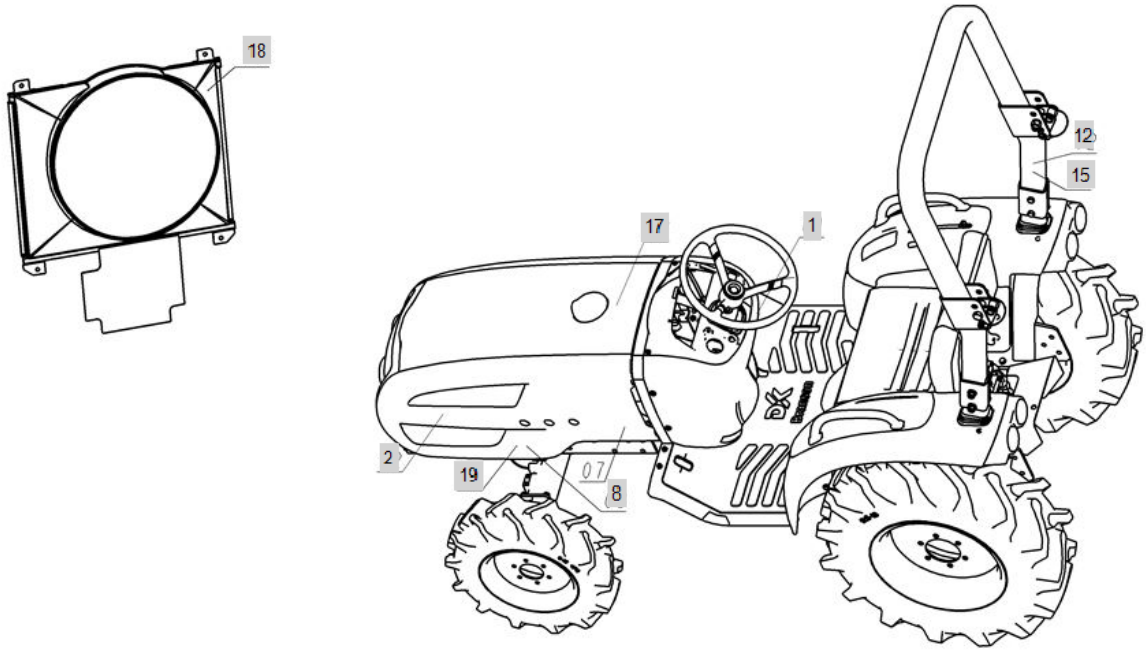

FIG T122.1-2A Branson 2100	122. DECAL	Year/Month 2020/02

KeyNo.	Part Number	Part Name	Quantity	Other
1	TZE4330000B4	MARK, MAIN SWITCH	1	
2	TA00016128A	BONNET LABEL, 2100	2	
5	TZE4150000A4	LABEL, PAKING BRAKE	1	
8	TZE5110000B4	NAMEPLATE,STARTERWARNING	1	
9	TA00016518A	CAUTION DECAL	1	
10	TA00016517A	WARNNING DECAL	1	
11	NTE5220000C4	NAMEPLATE,DANGER	1	
12	TZE5170000B3	NAME PLATE, ROPS CAUTION	1	
12-1	TA00016829A	ROPS LABEL	1	
15	NTE5210000C4	NAMEPLATE,SAFETY	1	
17	TZE4190000C4	LABEL, FUEL CAUTION	1	
18	TZE5180000C4	NAME PLATE, REVOLUTION	1	
19	TZE5130000C4	NAME PLATE, CAUTION	1	
20	TZE4130000B4	LABEL,DIFFERENTIAL	1	
21	TA00016129A	LABEL(2100)	1	
22	NTE4930000A3	SIDE NAMEPLATE	1	

FIG T122.2-1A Branson 2100	122. DECAL	Year/Month 2020/02

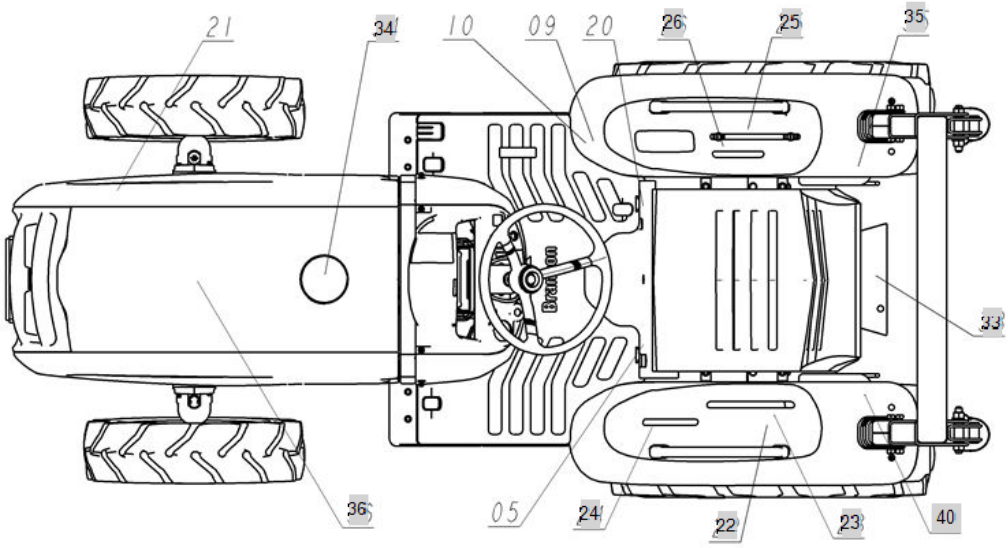

FIG T122.2-1A Branson 2100	122. DECAL	Year/Month 2020/02

KeyNo.	Part Number	Part Name	Quantity	Other
22	FED2220000B	LABEL, MID PTO	1	
23	FED2230000B	LABEL, PTO	1	
24	FED2240000B	LABEL, RANGE SHIFT	1	
25	TZE4170000B4	LABEL,HYDLIFT	1	
26	FED2260000B	LABEL, 4WD	1	
33	TZE4300000B4	NAME PLATE, PTO CAUTION	1	
34	FBE4990000A4	NAME PLATE, CAUTION	1	
35	NTE5150000C4	NAMEPLATE,SEATBELT	1	
36	EA00000679A	NAME PLATE	1	
37	NTE501E000A4		1	
38	NTE502E000A4		1	
39	NTE504E000A4	NAME PLATE, STARTING	1	
40	TA00016634A	LABEL,SEATBELT	1	
41	TA00031437A	HOOD DECAL (2200)	2	
46	TA00019280B	ROPS NAME PLATE	1	
47	TA00016930B	ROPS LABEL	1	
48	TA00017908B	DRAWBAR NAME PLATE	1	

FIG T122.2-2A Branson 2100	122. DECAL	Year/Month 2020/02

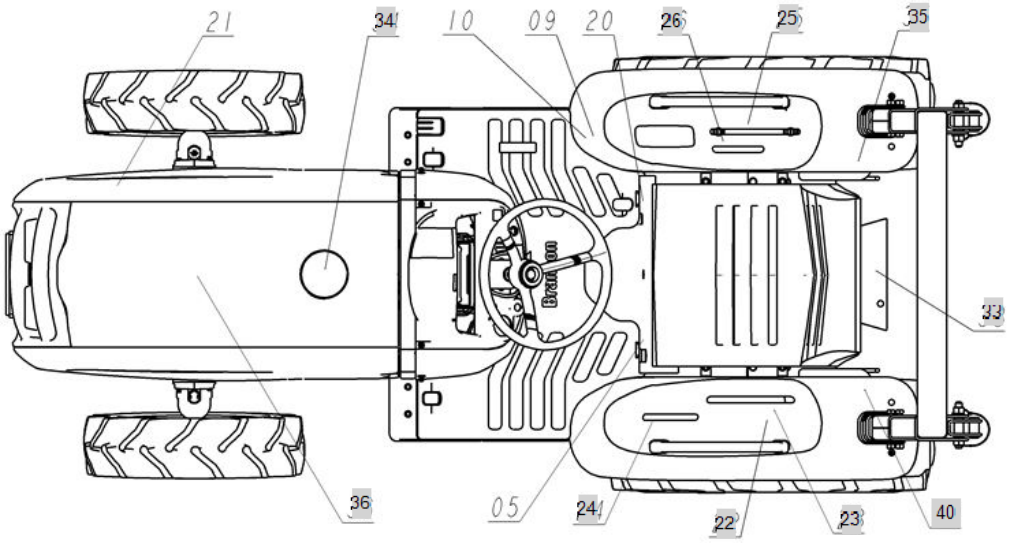

FIG T122.2-2A Branson 2100	122. DECAL	Year/Month 2020/02

KeyNo.	Part Number	Part Name	Quantity	Other
22	FED2220000B	LABEL, MID PTO	1	
23	FED2230000B	LABEL, PTO	1	
24	FED2240000B	LABEL, RANGE SHIFT	1	
25	TZE4170000B4	LABEL,HYDLIFT	1	
26	FED2260000B	LABEL, 4WD	1	
33	TZE4300000B4	NAME PLATE, PTO CAUTION	1	
34	FBE4990000A4	NAME PLATE, CAUTION	1	
35	NTE5150000C4	NAMEPLATE,SEATBELT	1	
36	EA00000679A	NAME PLATE	1	
40	TA00016634A	LABEL,SEATBELT	1	

FIG T124 Branson 2100	124. BALLAST WEIGHT	Year/Month 2020/02

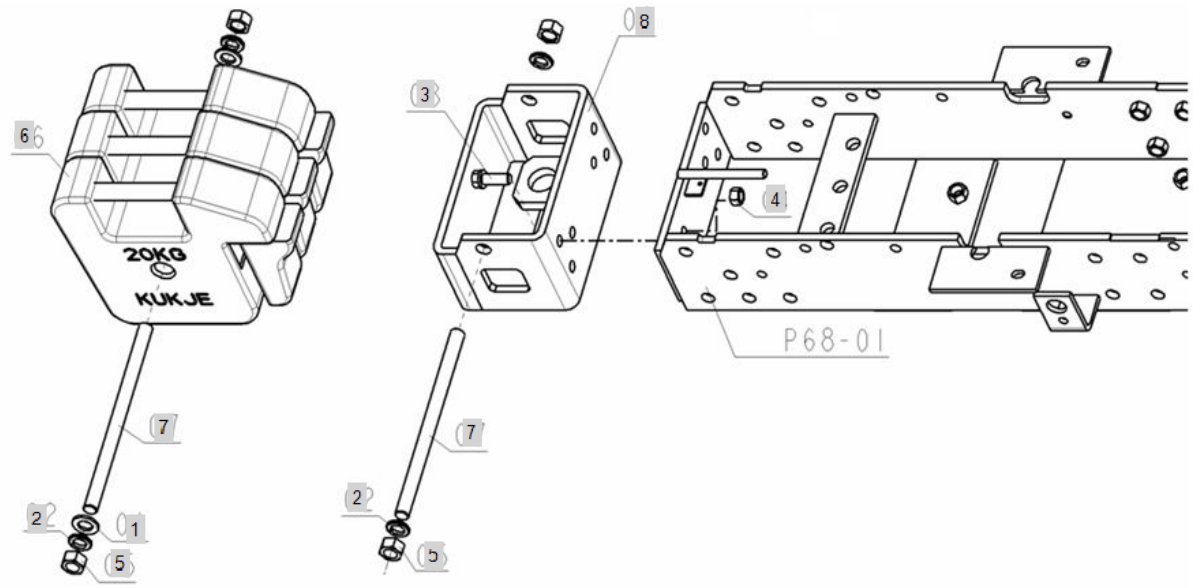

FIG T124 Branson 2100	124. BALLAST WEIGHT	Year/Month 2020/02

KeyNo.	Part Number	Part Name	Quantity	Other
1	22137-160000	WASHER, PLAIN (Φ 16)	2	
2	22217-160000	WASHER, SPRING (Φ 16)	4	
3	26013-120352	SCREW,CAPTIVEWASHERCAP	6	
4	26716-120002	BOLT,CYLINDER HEAD(B)	6	
5	26716-160002	NUT	4	
6	TTG0010000C2	WEIGHT,FRONT	5	
7	TA00016911A	BAR WEIGHT	2	
8	TA00016906A	FRONT HITCH ASS'Y	1	

FIG T125 Branson 2100	125. MIRROR	Year/Month 2020/02

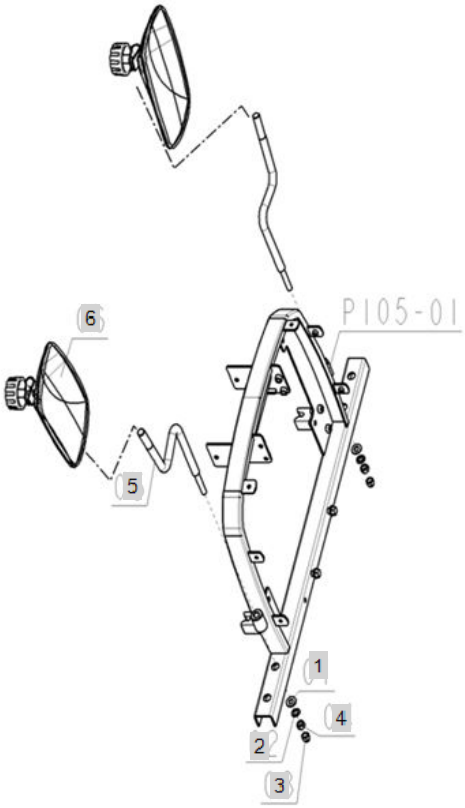

FIG T125 Branson 2100	125. MIRROR	Year/Month 2020/02

KeyNo.	Part Number	Part Name	Quantity	Other
1	22137-100000	WASHER, PLAIN (Φ 10)	2	
2	22217-100000	WASHER, SPRING (Φ 10)	2	
3	26657-100002	CAPNUT10	2	
4	26716-100002	Nut, Hexa (Φ10)	2	
5	NTD716E000B3	BACKMIRROR,STAY	2	
6	NTD719E000A3	BACKMIRRORASSY	2	

FIG T126 Branson 2100	126. SINGLE REMOTE	Year/Month 2020/02

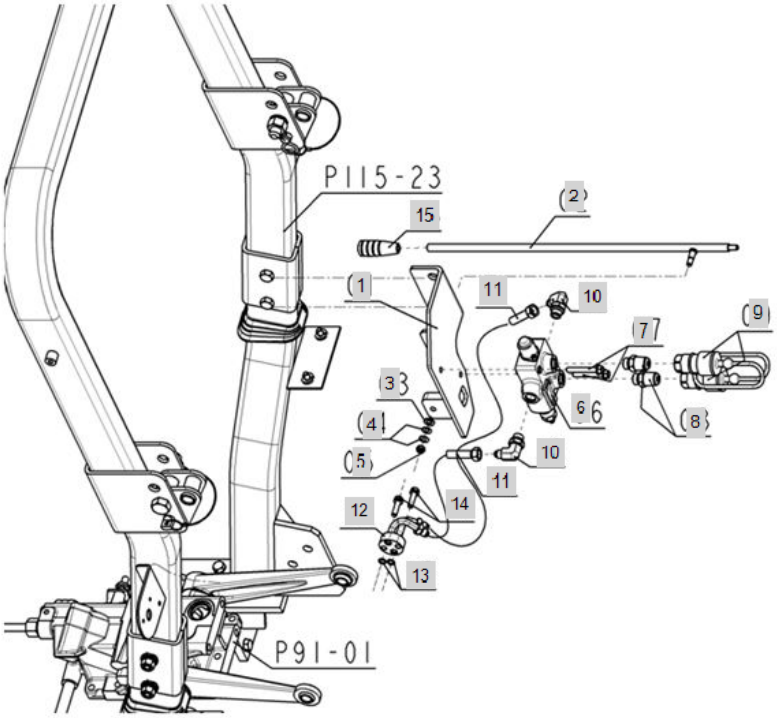

FIG T126 Branson 2100	126. SINGLE REMOTE	Year/Month 2020/02

KeyNo.	Part Number	Part Name	Quantity	Other
1	TA00021030A	BRACKET, SCV	1	
2	TA00021033A	LEVER, SCV	1	
3	22127-080000	WASHER, PLAIN (D80)	1	
4	RR66240000A4	DISH WASHER 8	2	
5	26346-080002	U-NUT(D80)	1	
6	TA00001290A	REMOTE VALVE, (2PORT)	1	
6-1	TA00037849A	2PORT VALVE(DETENT)	1	
7	26106-080552	HEX FLANGE BOLT (D80)	2	
8	FBA3060000A4	ADAPTER (1/2")	2	
9	BA3150000A3	ARM(1/2"), JOINT	2	
10	CEE4050000A4	ELBOW (3/8)	2	
11	TA00022932B	HYD HOSE (PF3/8 800)	2	
12	TA00019291D	HYD CAP	1	
13	24311-000090	O-RING, DYNAMIC (Φ9)	2	
14	26013-080302	HEX BOLT W/WASHER	2	
15	VD05460000A4	LEVER(BLACK)	1	

FIG T127 Branson 2100	127. LEVER LOADER	Year/Month 2020/02

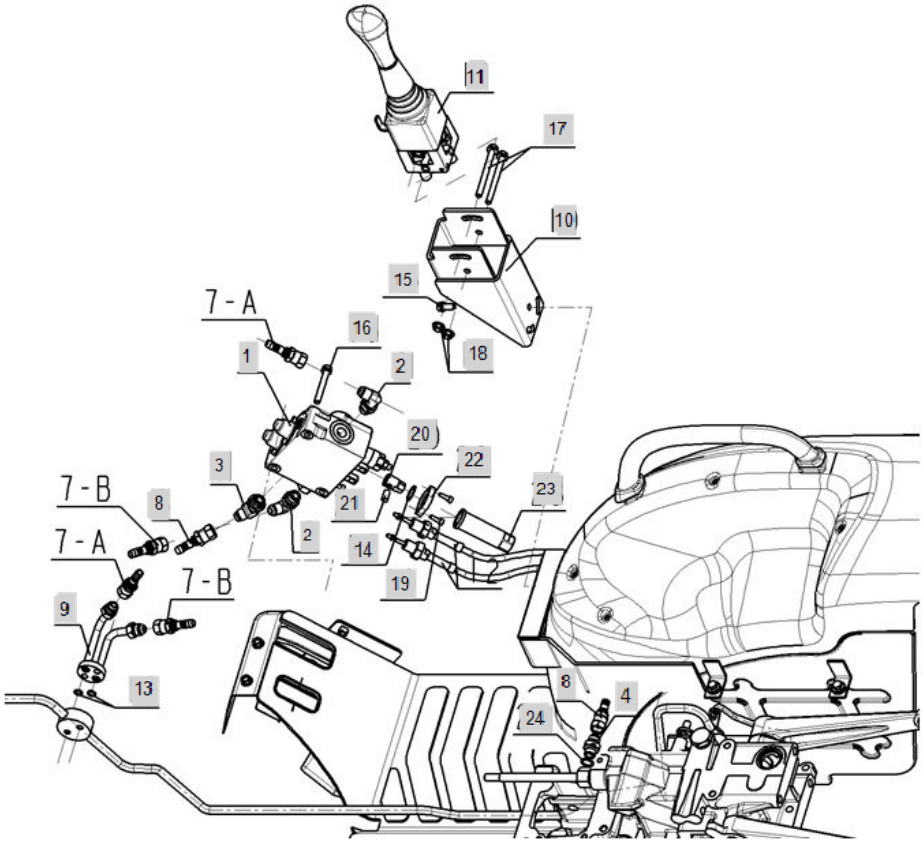

FIG T127 Branson 2100	127. LEVER LOADER	Year/Month 2020/02

KeyNo.	Part Number	Part Name	Quantity	Other
1	TA00018756A	SCV/V	1	
2	CEE4050000A	ELBOW(3/8)	2	
3	FT33060000A4	45ELBOW[3/8]	1	
4	TA00025318A	CONNECTOR	1	
7	TA00024930A	HOSE	2	
8	TA00026954A	HOSE	1	
9	TA00019291D	HYD CAP	1	
10	TA00026634A	BRAKET	11	
11	TA00001520B	JOYSTICK ASS'Y RELATION	1	
12	FBK8730000B3	WIRE	2	
13	24311-000900		2	
14	24341-000220	O-RING, FIX (Φ22)	2	
15	26013-080202	Bolt, Hexa (8-20)	3	
16	26013-080602	Bolt, Hexa (8-60)	3	
17	26106-080852	SCREW,HEXFLANGEHEADCAP	2	
18	26367-080002	HEX FLANGE NUT (Φ8)	2	
19	26450-050162	BOLT	4	
20	TA00001526A	JOINT	2	
21	TA00001528A	PIN	2	
22	TA00001530A	COVER A	2	
23	TA00001527A	JOINT SHAFT	2	
24	24311-000140	O-RING, DYNAMIC (Φ14)	1	

FIG T128 Branson 2100	128. CANOPY - OPTION	Year/Month 2020/02

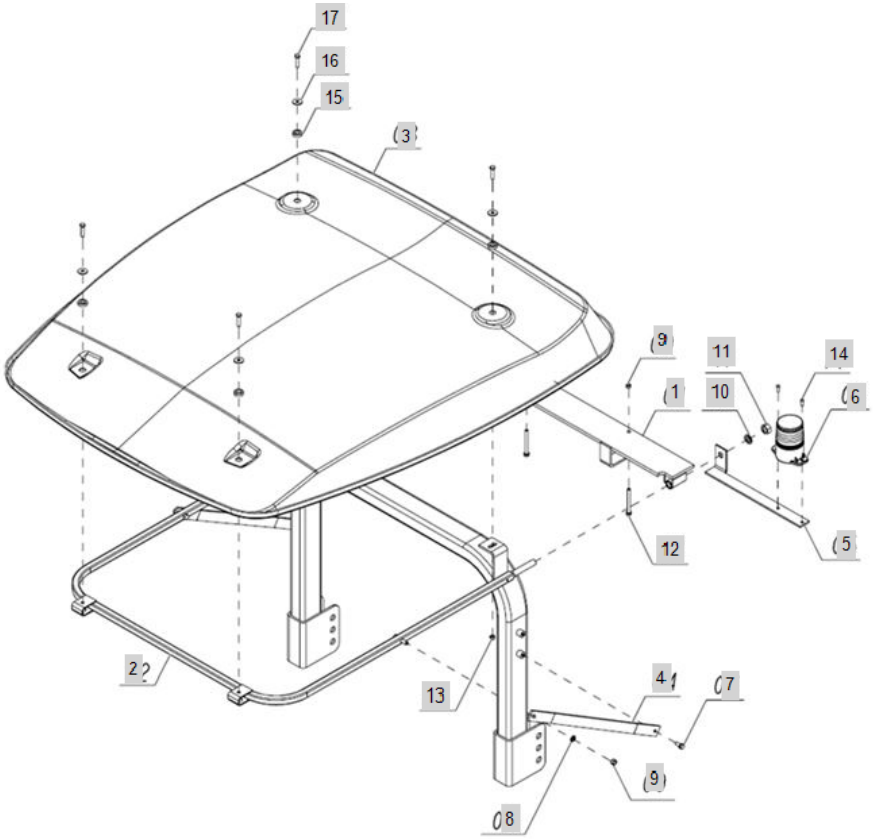

FIG T128 Branson 2100	128. CANOPY - OPTION	Year/Month 2020/02

KeyNo.	Part Number	Part Name	Quantity	Other
1	TA00041330A		1	
2	TCJ6020000B1	FRAME ASSY, SUN VISOR	1	
3	TCJ6040000B0	ROOF ASSY	1	
4	TA00041332A		2	
5	TA00041383A		1	
6	HA00000594C	LIGHT	1	
7	26013-080202	Bolt, Hexa (8-20)	2	
8	22217-100000	WASHER, SPRING (Φ 10)	2	
9	26736-100002	HEXNUT	4	
10	22217-160000	WASHER, SPRING (Φ 16)	2	
11	26716-160002	NUT	2	
12	26013-100802	HEX BOLT W/WASHER	2	
13	26736-080002	NUT	2	
14	26557-060162	(+)SMALLSCREW	2	
15	TT29150000A4	RUBBERA	4	
16	22157-080000	WASHER, PLAIN (Φ 08)	4	
17	26117-080352	BOLT4T(8X35)	4	