KUKJE Branson 2505h_EU Tractor

Parts Catalogue

BRANSON TRACTOR

CONTENTS

GROUP NO	GROUP NAME	PAGE
000.1	2505H_EU	4
201	AIR CLEANER	6
202	RADIATOR	8
203	MUFFLER	10
204	FUEL TANK & FUEL LINE	12
205	ACCELERATOR	14
206	FUEL FILTER	16
207	ENGINE MOUNTING	18
301	FLYWHEEL COVER	20
302	BRAKE	22
303	BRAKE PEDAL & LINKAGE	24
304-1	SPEED CONTROL	26
304-2	SPEED CONTROL(2019~)	29
305	DASH COVER	32
306	STEERING VALVE	34
307	STEERING CYLINDER	36
308	STEERING WHEEL	38
309A	WHEEL	40
401	INPUT SHAFT	42
402	HST	44
403	INPUT GEAR	46
404	RANGE GEAR	48
405	4WD DRIVE GEAR	50
406	P.T.O DRIVE SHAFT	52
407	P.T.O SHAFT	54
408	MID P.T.O GEAR	56
409	DIFF LOCK	58
410	REAR TRANSMISSION CASE	60
411	REAR AXLE HOUSINGS	62
412	RANGE SHIFT LEVER	64
413	P.T.O CHANGE LEVER	66
414	4WD CHANGE LEVER	68
415	TRANSMISSION MOUNTING	70
501	FRONT DRIVE SHAFT	72
502	FRONT DIFFERENTIAL GEAR	74

GROUP NO	GROUP NAME	PAGE
503	FRONT AXLE HOUSING	76
504	FRONT GEAR CASE (1)	78
505	FRONT GEAR CASE (2)	80
601	CYLINDER CASE	82
602	LIFT ARM	84
603	FLOW CONTROL VALVE	86
604	MAIN CONTROL VALVE	88
605	HYDRAULIC SUB	90
606	HITCH & 3-POINT LINKAGE	92
607	HITCH & COVER	94
701.1	BONNET	96
701.2	BONNET	98
702	FLOOR	100
703	SEAT	102
704	ROPS	104
705	LEVER COVER & FENDER	106
706	LAMP	108
801	BATTERY MOUNTING	110
802	INSTRUMENT PANEL	112
803	HARNESS	114
804	HARNESS	116
805	HARNESS	118
901	TOOL & ACCESSORY	120
902	WEIGHT	122
903	LABEL	124
904	LABEL	126

FIG 000.1 Branson 2505h_EU	2505H_EU	Year/Month 2020-09

A GROUP — 엔진그룹 1 (ENGINE)

B GROUP — 엔진보기, 컨트롤 2 (ENGINE ACCESSORIES, CONTROL)

C GROUP — 브레이크, 스티어링 3 (BRAKE, STEERING)

D GROUP — 트랜스미션, 리어액슬 4 (TRANSMISSION, REAR AXLE)

E GROUP — 프론트 액슬 5 (FRONT AXLE)

F GROUP — 유압관계 및 3P 링크 6 (HYDRAULICS, 3-POINT LINK)

G GROUP — 외장 7 (SHEET METAL)

H GROUP — 전기장치, 하니스 8 (ELECTRICALS, HARNESS)

I GROUP — 공구 , 라벨 9 (LABEL, TOOLS)

FIG 000.1 Branson 2505h_EU	2505H_EU	Year/Month 2020-09

KeyNo.	Part Number	Part Name	Quantity	Other
1	2505H_EU_1	ENGINE	0	
2	2505H_EU_2	ENGINE ACCESSORIES & CONTROL	0	
3	2505H_EU_3	BRAKE, STEERING	0	
4	2505H_EU_4	TRANSMISSION & REAR AXLE	0	
5	2505H_EU_5	FRONT AXLE HOUSING	0	
6	2505H_EU_6	HYDRAULIC & 3-POINT LINK	0	
7	2505H_EU_7	SHEET METAL	0	
8	2505H_EU_8	ELECTRICALS & HARNESS	0	
9	2505H_EU_9	TOOLS, LABEL	0	

FIG 201 Branson 2505h_EU	AIR CLEANER	Year/Month 2020-09

FIG 201 2505H	AIR CLEANER	P1	YEAR 2019	

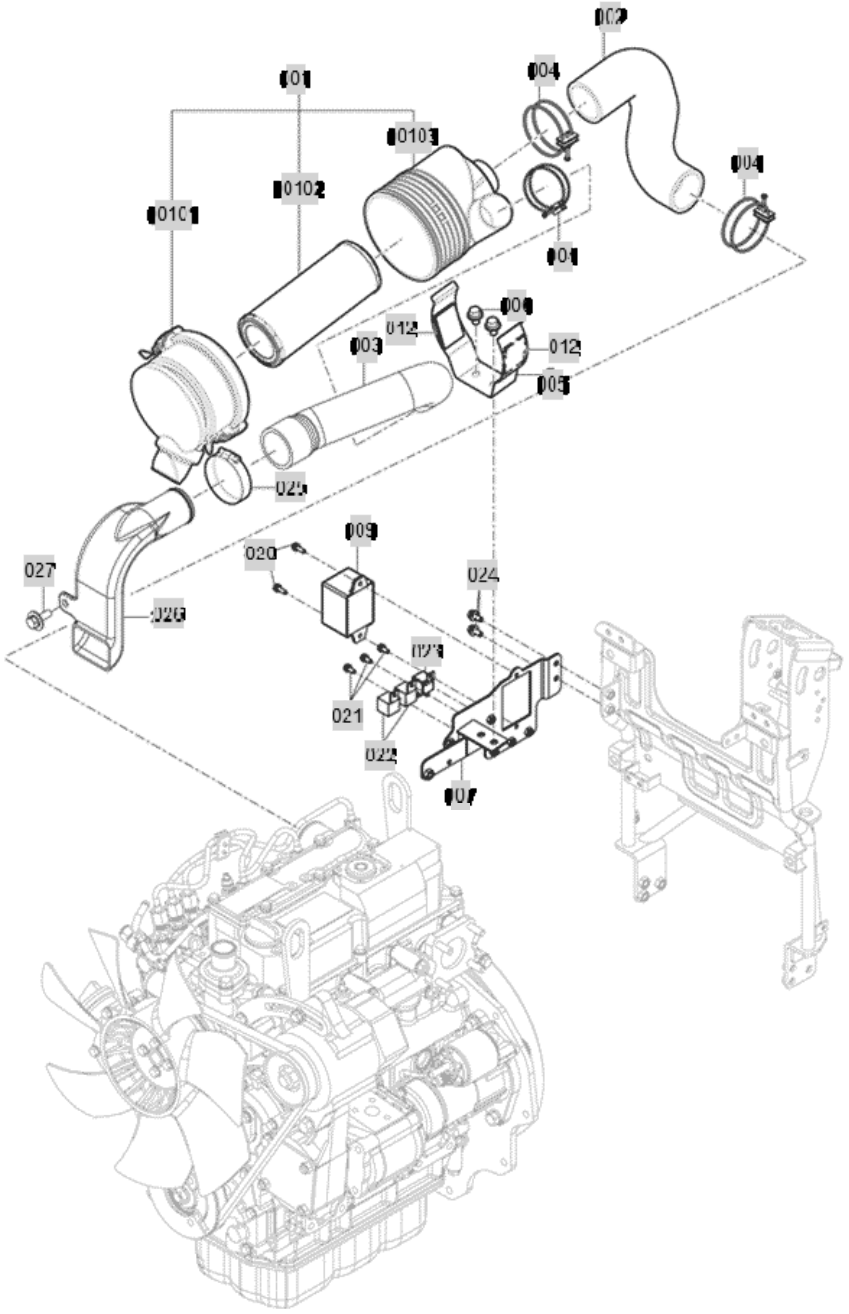

NOTE	

FIG 201 Branson 2505h_EU	AIR CLEANER	Year/Month 2020-09

KeyNo.	Part Number	Part Name	Quantity	Other
001	11201032000A	AIR CLEANER ASSY	1	
00101	11201032030	COVER	1	
00102	11201032020	ELEMENT	1	
00103	11201032010	BODY	1	
002	11111034000	HOSE(AIR CLEANER/OUT)	1	
003	11511213100	HOSE , AIRCLEANER INLET	1	
004	36213040010A	CLAMP 60	3	
005	11101032300	BRACKET(AIR CLEANER)	1	
006	V2183608020	BOLT(SP)	2	
007	11116315100		1	GB
009	11206642100	CASE ASSY , FUSE	1	
012	11101032400A	SPONGE, AIR CLEANER	2	
020	V2323606020	BOLT	2	
021	V2123606016	BOLT(SP)	3	
022	17686641110B	GROW RELAY	2	
023	11616212900	5P RELAY	1	
024	V2183608020	BOLT(SP)	2	
025	34513310040A	BAND CLAMP 64	1	
026	11511213300	DUCT, AIR INLET	1	
027	V2193606020	BOLT(SPL)	1	

FIG 202 2505H	RADIATOR	P1	YEAR 2019	

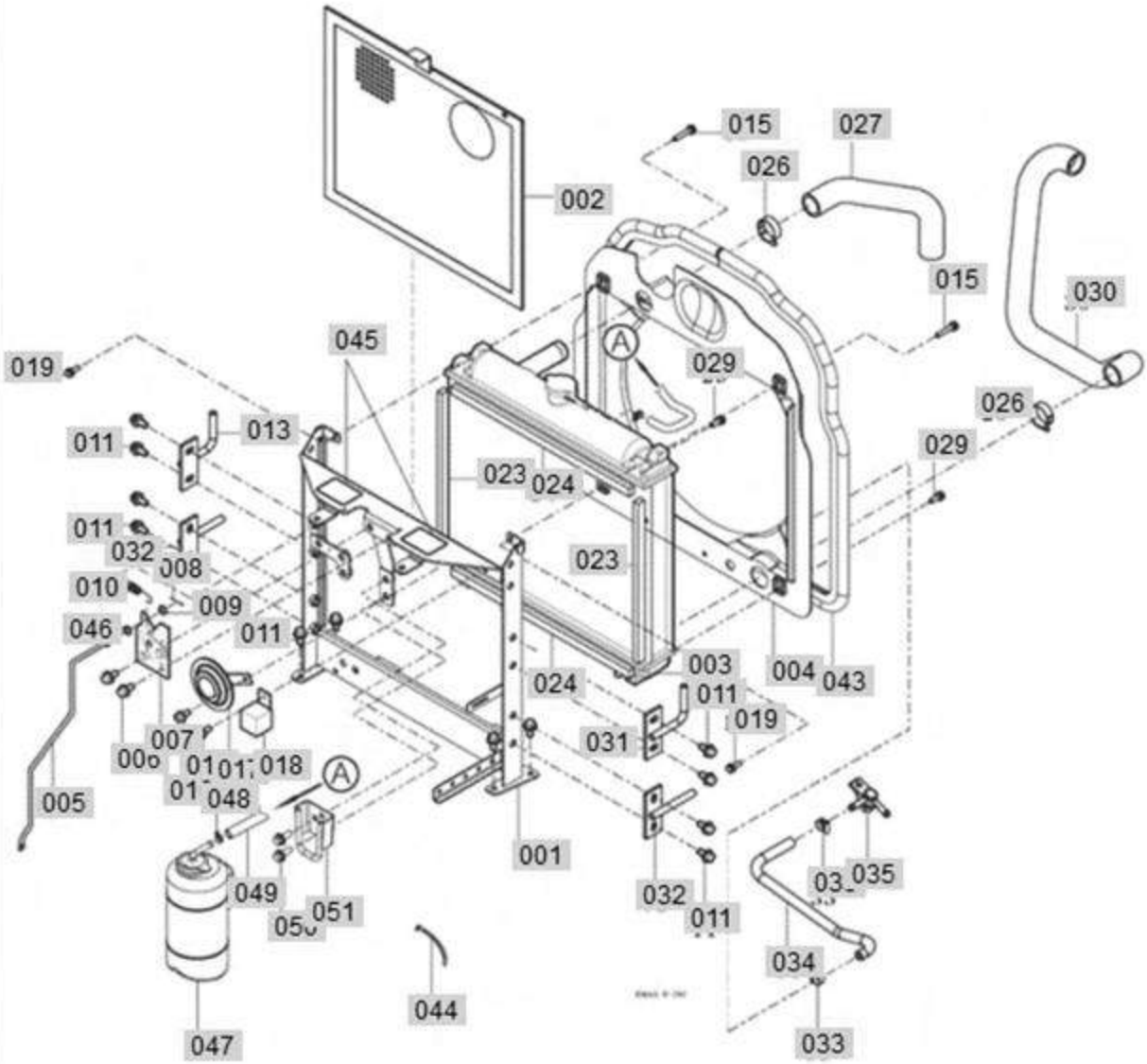

NOTE

FIG 202 Branson 2505h_EU	RADIATOR	Year/Month 2020-09

KeyNo.	Part Number	Part Name	Quantity	Other
001	TA00059647A	FRAME COMP , FRONT	1	
002	TA00052072A	NET COMP , RADIATOR	1	
003	11111042000	RADIATOR COMP	1	
004	11111050050	SHROUD	1	
005	11126024301		1	
006	V2183608020	BOLT(SP)	2	
007	11106024501	STAY SUB, HOOD	1	
008	V5001925020	PIN	1	
009	V4111600060	WASHER, PLAIN	1	
010	11106020010	SPRING (4)	1	
011	V2183608020	BOLT(SP)	14	
013	11116013601A	PIN COMP (F/H/R)	1	
015	V2193606020	BOLT(SPL)	2	
016	V2323606016	BOLT(SP)	2	
017	13266212003	HORN	1	
018	17686641110B	GROW RELAY	1	
019	V2323606016	BOLT(SP)	2	
023	11101042390	SPONGE (314)	2	
024	11101042350	SPONGE (410)	2	
026	14445100080C	CLAMP 40	2	
027	11111040011	RADIATOR HOSE(IN)	1	
029	V2193606020	BOLT(SPL)	2	
030	11111040110	RADIATOR HOSE(OUT)	1	
031	11116013501A	PIN COMP (F/H/L)	1	
032	11116013700	PIN COMP (D)	2	
033	14501410050A	CLAMP 16	2	
034	11111040091	RADIATOR HOSE	1	
035	15601041000	CONNECTOR ASSY	1	
043	11201050080	INSULATOR , RADIATOR	1	
044	15606950150C	CABLE TIE , 370	2	
045	13016400010	SEAL, BATTERY BRACKET	2	
046	V7231015006	O RING(P)	1	
047	16003302101	TANK ASSY , RESERVE	1	
048	14501410050A	CLAMP 16	2	
049	17995010150	HOSE . 500	1	
050	V2183608020	BOLT(SP)	2	
051	36753302201A	HOLDER COMP , TANK/RESERVE	1	GB

FIG 203 2505H	MUFFLER	P1	YEAR 2019	

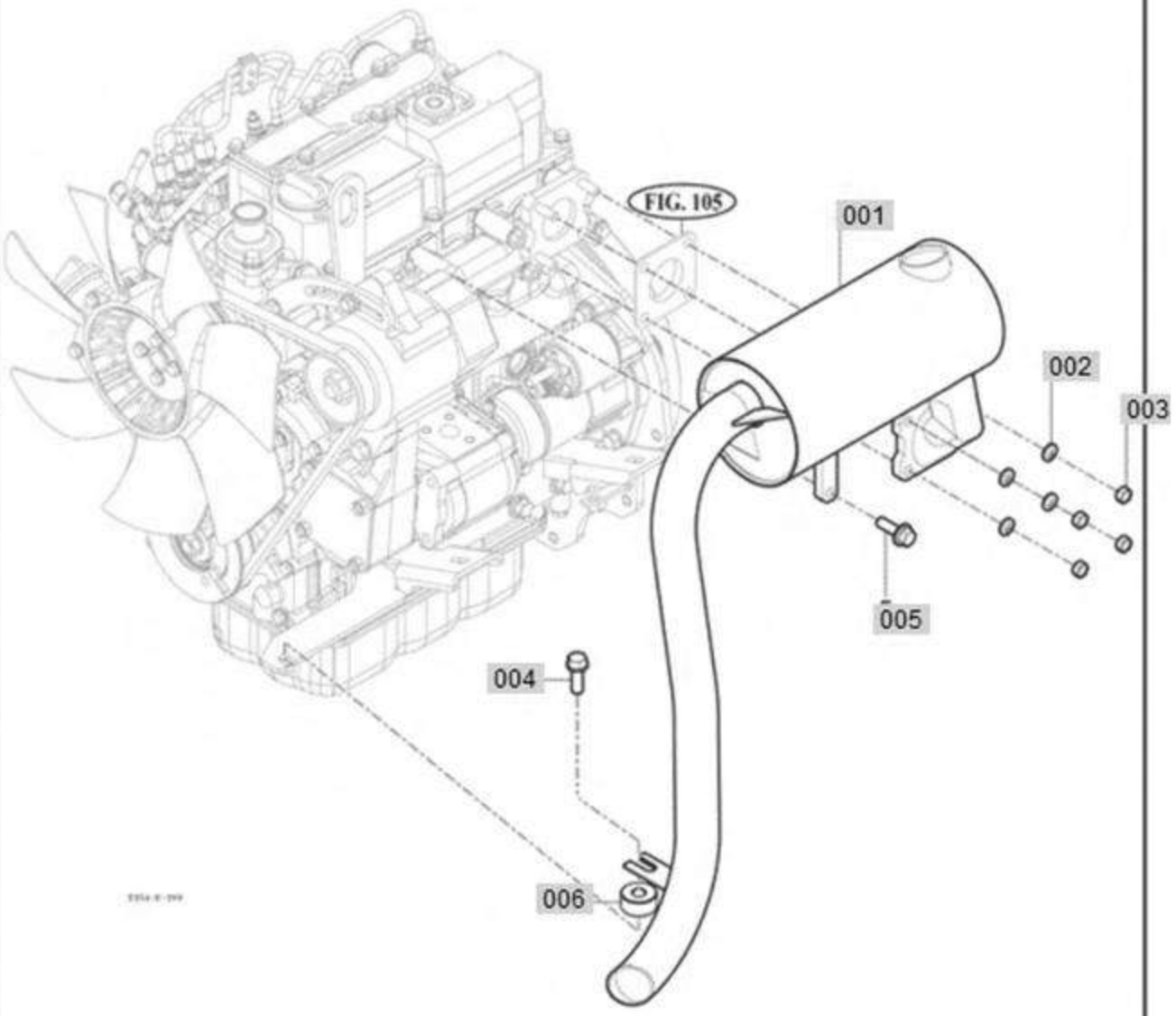

NOTE	

FIG 203 Branson 2505h_EU	MUFFLER	Year/Month 2020-09

KeyNo.	Part Number	Part Name	Quantity	Other
001	TA00059649A	MUFFLER COMP	1	
002	V4011600080	WASHER, SPRING	4	
003	V3042600080	NUT	4	
004	V2183608040	BOLT(SP)	1	
005	V2183608060	BOLT(SP)	1	
006	11111050010	COLLAR (9X25X10)	1	

FIG 204 2505H	FUEL TANK & FUEL LINE	P1	YEAR 2019	

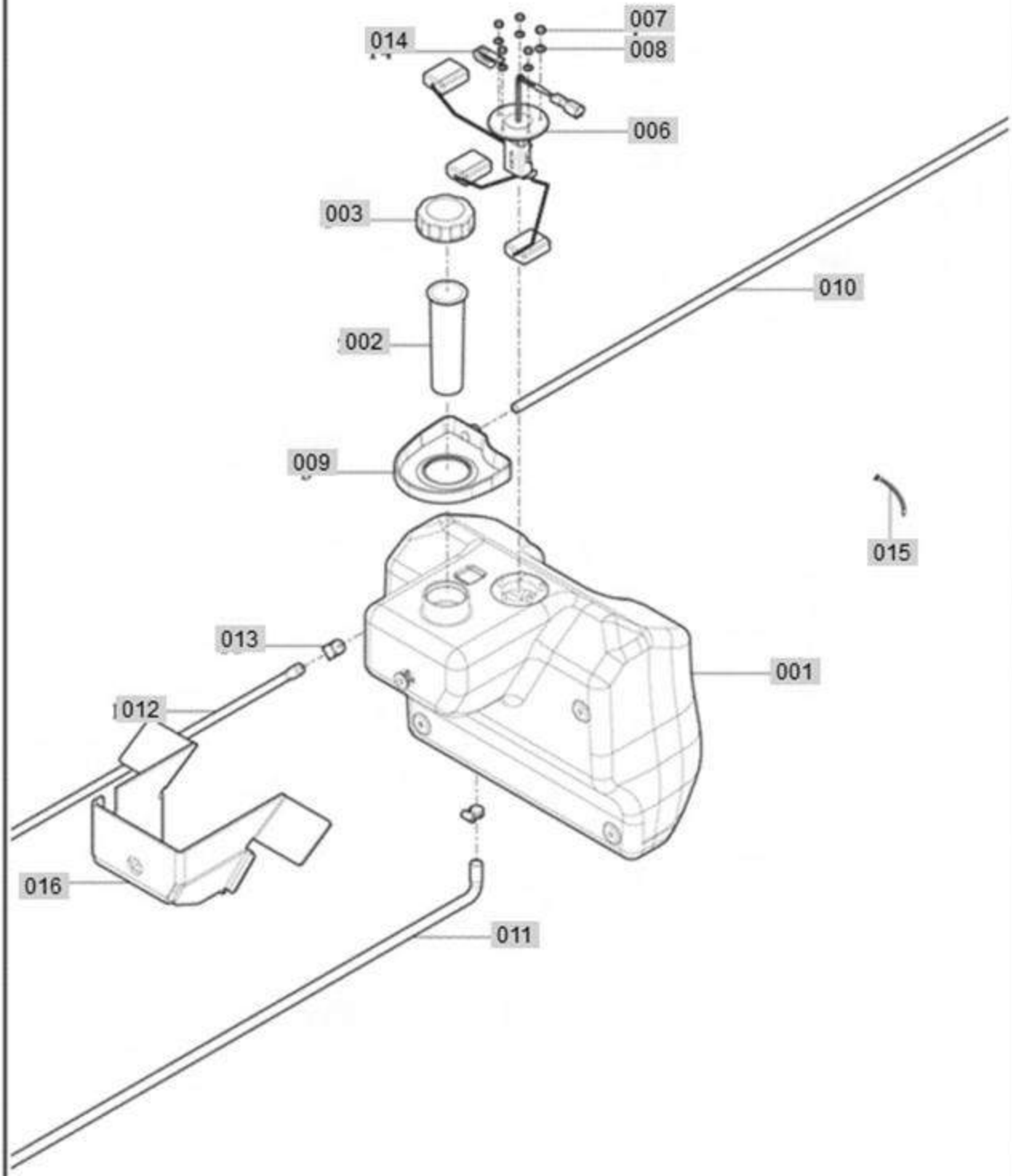

NOTE	

FIG 204 Branson 2505h_EU	FUEL TANK & FUEL LINE	Year/Month 2020-09

KeyNo.	Part Number	Part Name	Quantity	Other
001	11101112101C	FUEL TANK COMP	1	
002	16731112130	FILTER	1	
003	13603102000A	CAP ASSY, FUEL TANK	1	
006	11101112300A	GAUGE ASSY, FUEL	1	
007	V3012600050	NUT	5	
008	V4011600050	WASHER, SPRING	5	
009	11101112010B	COVER, FUEL CAP	1	
010	11101112020A	HOSE ASSY, COVER	1	
011	11111114100A	FUEL HOSE ASSY(1110)	1	
012	11111113401A	HOSE ASSY , RETURN 380	1	
013	37481850030A	BAND CLAMP 18	2	
014	37371720090	CLAMP(D)	1	
015	13424020060A	CABLETIE(300)	5	
016	11101112031	INSULATOR, FUEL	1	

FIG 205 Branson 2505h_EU	ACCELERATOR	Year/Month 2020-09

FIG 205 2505H	ACCELERATOR	P1	YEAR 2019	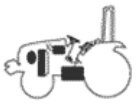

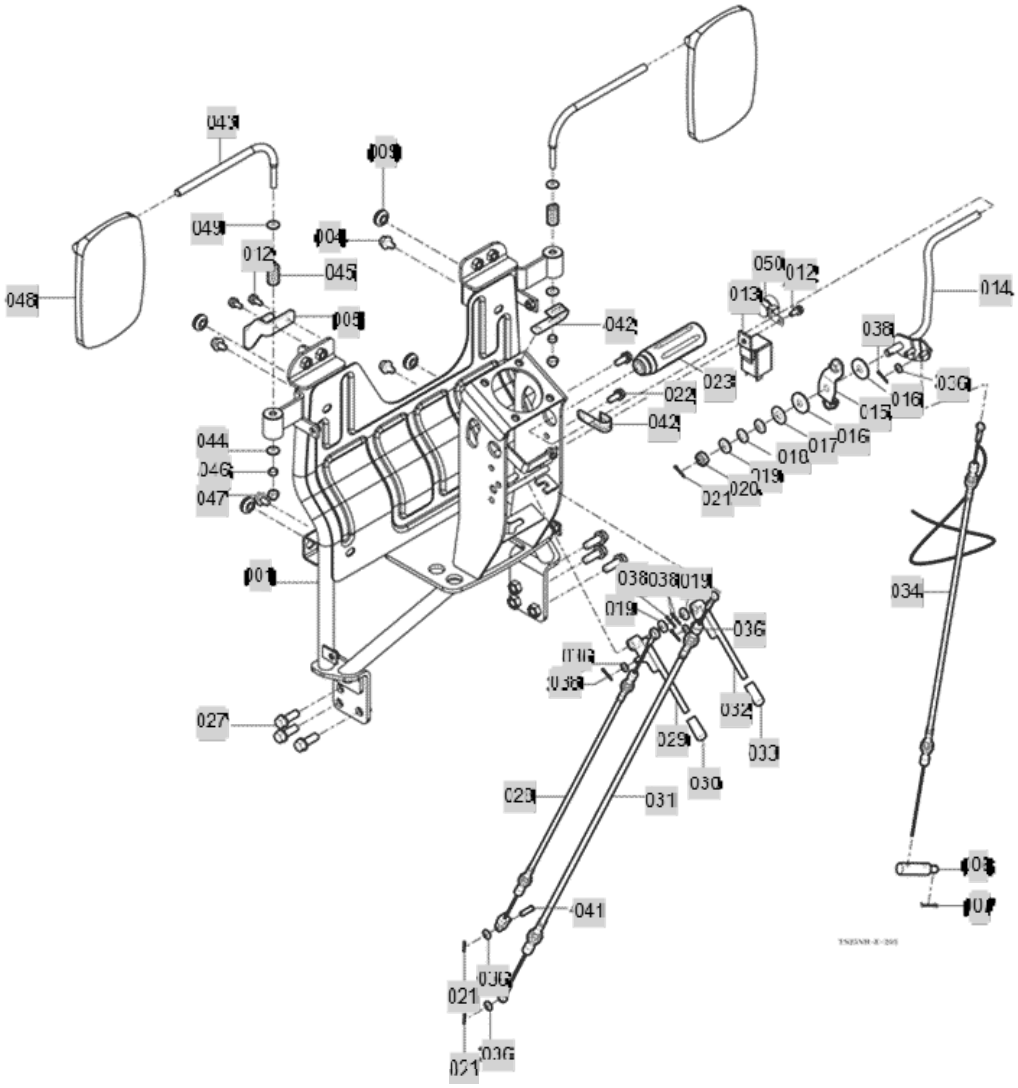

NOTE	

FIG 205 Branson 2505h_EU	ACCELERATOR	Year/Month 2020-09

KeyNo.	Part Number	Part Name	Quantity	Other
001	11176302000GB		1	
004	V2183608016	BOLT(SP)	4	
005	11116302380GB		1	
006	11111162411	PIN, ACCELERATOR	1	
007	21306010180	PIN(6)	1	
009	19026642010	GROMMET(12X17X3.2)	4	
012	V2123606016	BOLT(SP)	3	
013	13606642401		1	
014	11171162500GB		1	
015	11101162600B	BRACKET COMP, ACCELERATOR	1	
016	15965120021A	LINING(11X30X03)	2	
017	36104400180	WASHER	1	
018	14527060010	WASHER/M10	2	
019	V4111600100	WASHER, PLAIN	3	
020	V3232600100	NUT	1	
021	V5001920015	PIN	3	
022	V2173608020	BOLT(S)	2	
023	17681170050A	GRIP(REVERSE)	1	
027	V2173610030	BOLT(S)	6	
028	11103286300A	PARKING BRAKE CABLE ASSY	1	
029	TA00059651A	LEVER COMP,PARKING	1	
030	14445070030	LEVER GRIP	1	
031	11106304101	CRUISE CABLE ASSY	1	
032	TA00059655A	LEVER COMP, CRUISE	1	
033	14445070030	LEVER GRIP	1	
034	11111162100B	CABLE ASSY	1	
036	V4111600060	WASHER, PLAIN	5	
038	V5001920020	PIN	5	
041	15601160083	PIN(06X16)	1	
042	14256210040A	HARNESS CLAMP (9)	2	
043	11126313011GB		2	
044	11126313020		2	
045	19027732040		2	
046	V3013600100	NUT .HEX NORMAL /2	2	
047	V3402600100		2	
048	15186313000	MIRROR ASSY	2	
049	V4111600100	WASHER, PLAIN	2	
050	16586652000	HORN COMP	1	

FIG 206 2505H	FUEL FILTER	P1	YEAR 2019	

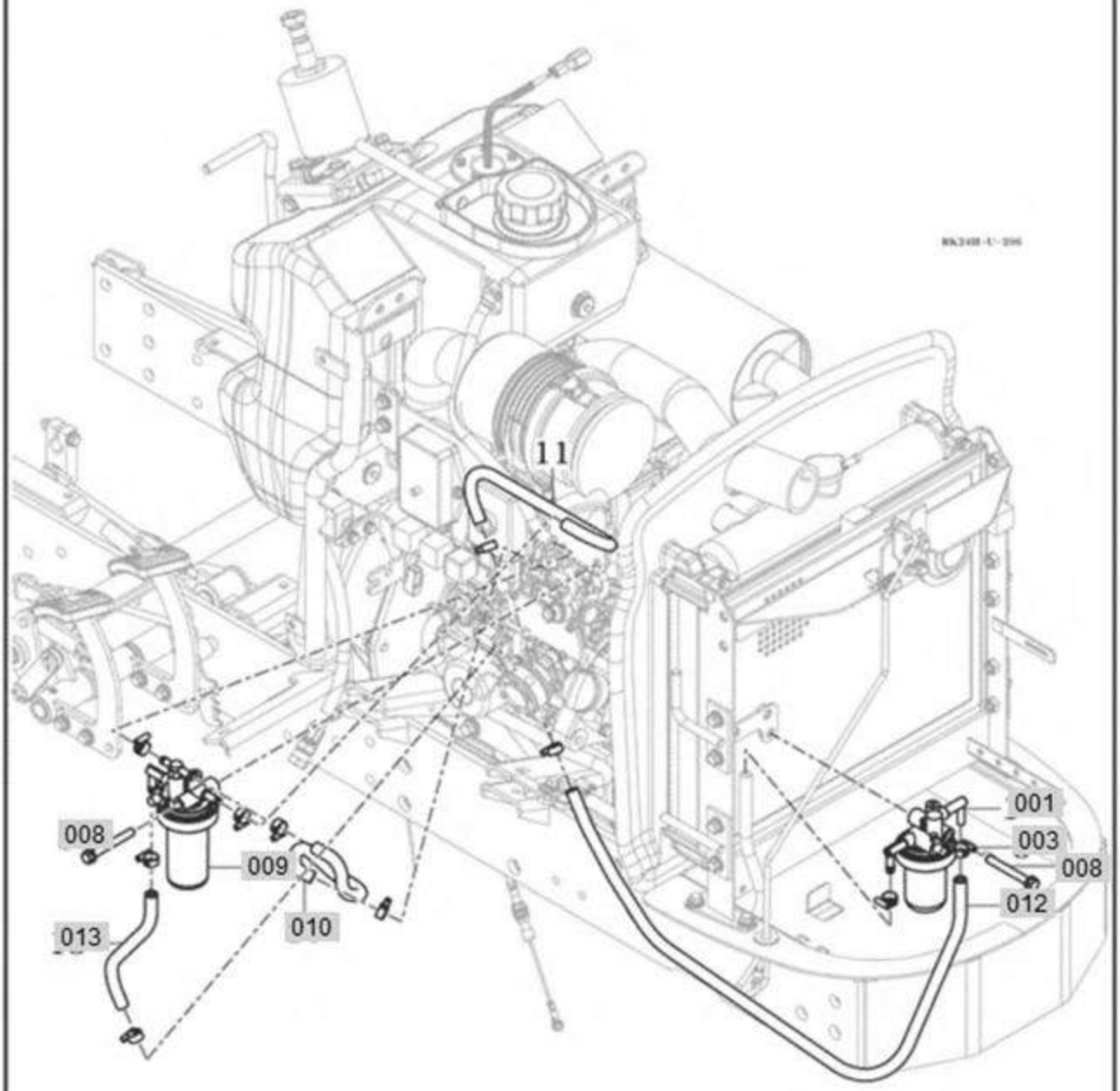

NOTE	

FIG 206 Branson 2505h_EU	FUEL FILTER	Year/Month 2020-09

KeyNo.	Part Number	Part Name	Quantity	Other
001	129335-55750	SUB TO ->1A00052141A SEPARATOR ASSY WATER	1	
003	14501410050A	CLAMP 16	10	
008	V2173608070	BOLT(S)	2	
009	119740-55601	STRAINER ASSY	1	
010	11111113301B	HOSE(FUEL OUT/290) ASSY	1	
012	11111113103	HOSE(FUEL FILTER/630) ASSY	1	
013	11111113500A	HOSE (FUEL FILTER/220) ASSY	1	

FIG 207 2505H	ENGINE MOUNTING	P1	YEAR 2019	

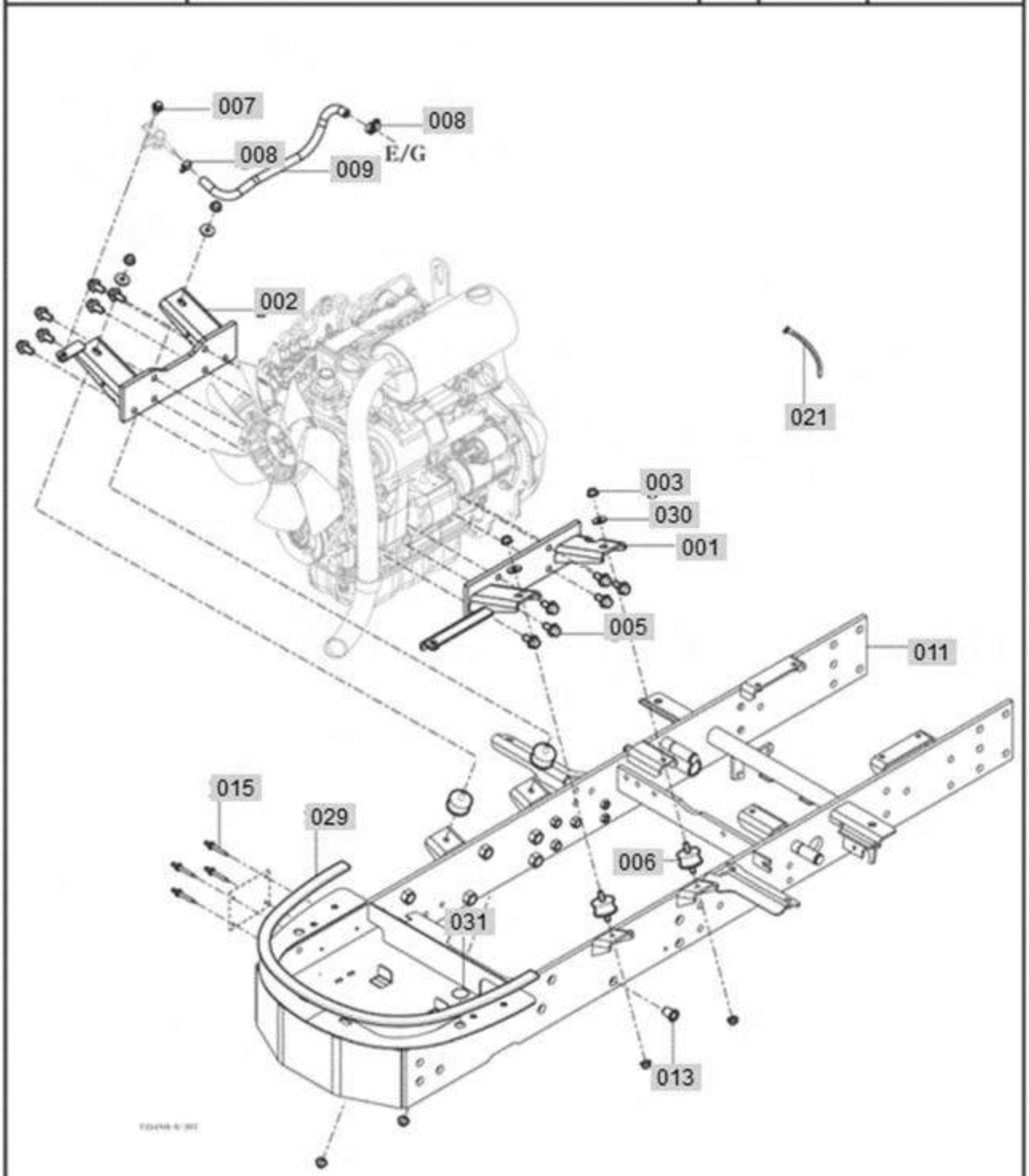

NOTE	

FIG 207 Branson 2505h_EU	ENGINE MOUNTING	Year/Month 2020-09

KeyNo.	Part Number	Part Name	Quantity	Other
001	11114073101GB		1	
002	TA00058044A	BRACKET COMP, MOUNT(R)	1	
003	V3802600080	NUT	8	
005	V2184610025	BOLT(SP)	12	
006	11104070010A	ENGINE MOUNT RUBBER	4	
007	V2183608020	BOLT(SP)	1	
008	37481850030A	BAND CLAMP 18	2	
009	11111040131	RADIATOR CONNECTOR2	1	
011	TA00059653A	FRAME COMP , AXLE	1	
013	14326210110	CAP(M16)	14	
015	V5502040093	REVET	4	
021	13764020030A	CABLE TIE , 140	5	
029	11106300032A	INSULATOR(COVER)	1	
030	35602010150	WASHER	4	
031	12389010070	LABEL , SEAL D30	1	

FIG 301 2505H	FLYWHEEL COVER	P1	YEAR 2019	

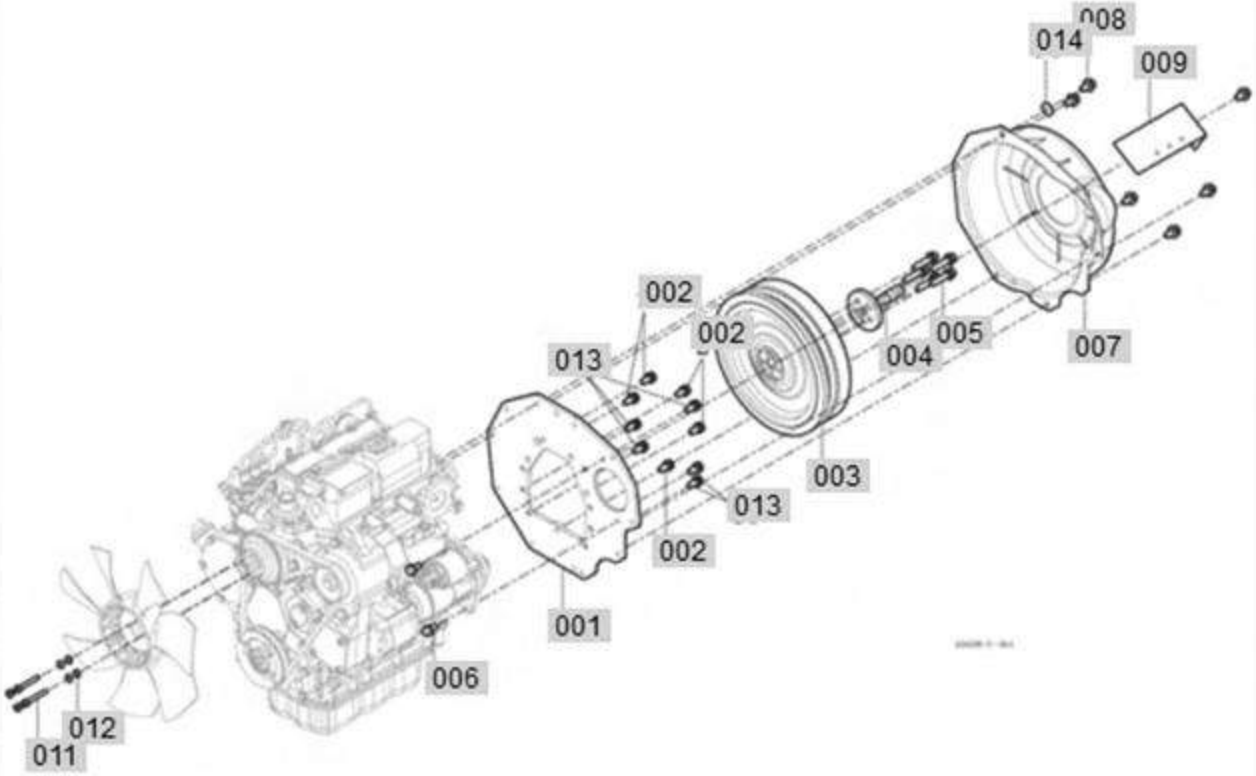

NOTE	

FIG 301 Branson 2505h_EU	FLYWHEEL COVER	Year/Month 2020-09

KeyNo.	Part Number	Part Name	Quantity	Other
001	TA00058030A	REAR PLATE	1	
002	V2173610020	BOLT(S)	5	
003	11121012000		1	
004	11111010010	PTO COUPLING	1	
005	14661019340	FLYWHEEL BOLT	5	
006	V2183610025	BOLT(SP)	2	
007	11102100011		1	
008	V2183610020	BOLT(SP)	6	
009	TA00058037A	STARTER COVER	1	
011	V2053606050	BOLT	4	
012	V4011600060	WASHER, SPRING	4	
013	V2173610025	BOLT(S)	5	
014	13377210020	WASHER (11X24X3)	1	

FIG 302 2505H	BRAKE	P1	YEAR 2019	

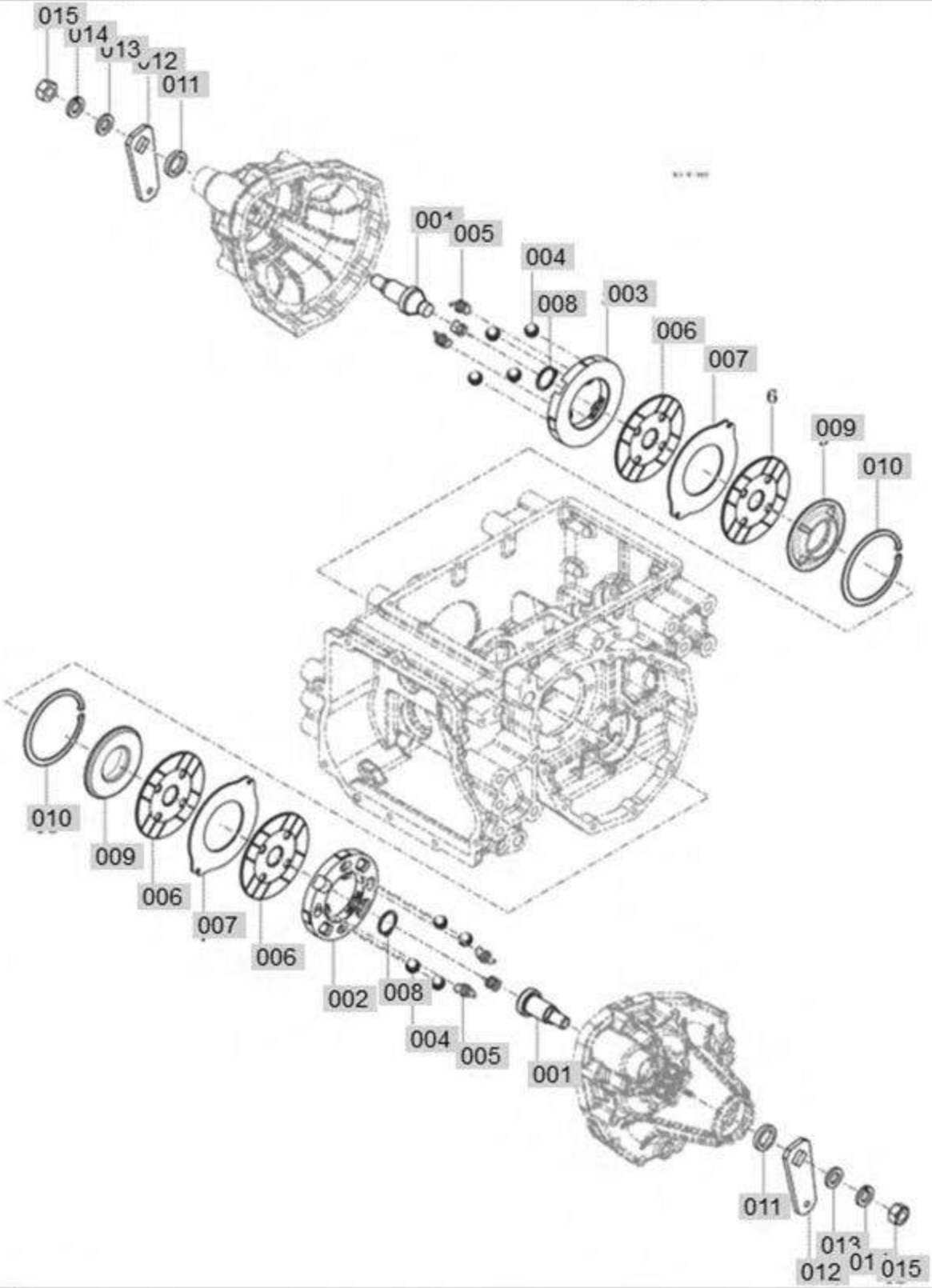

NOTE

FIG 302 Branson 2505h_EU	BRAKE	Year/Month 2020-09

KeyNo.	Part Number	Part Name	Quantity	Other
001	16703270011A	CAM	2	
002	TA00059658A	METAL ,BRAKE LH	1	
003	TA00059659A	METAL ,BRAKE RH	1	
004	V6802000019	BALL	8	
005	16703272030A	RETURN SPRING	6	
006	13153272100A	DISK PLATE	4	
007	13153270030A	PLATE	2	
008	V7041400300	CIR CLIP,EXTERNAL	2	
009	TA00059657A	COVER , BRAKE	2	
010	11103270040	SNAP RING (14)	2	
011	V7441253506	SEAL, OIL (D)	2	
012	11103270093	BRAKE ARM	2	
013	V4111600160	WASHER, PLAIN	2	
014	V4011600160	WASHER, SPRING	2	
015	V3343600160	NUT	2	

FIG 303	BRAKE PEDAL & LINKAGE	P1	YEAR	
2505H			2019	

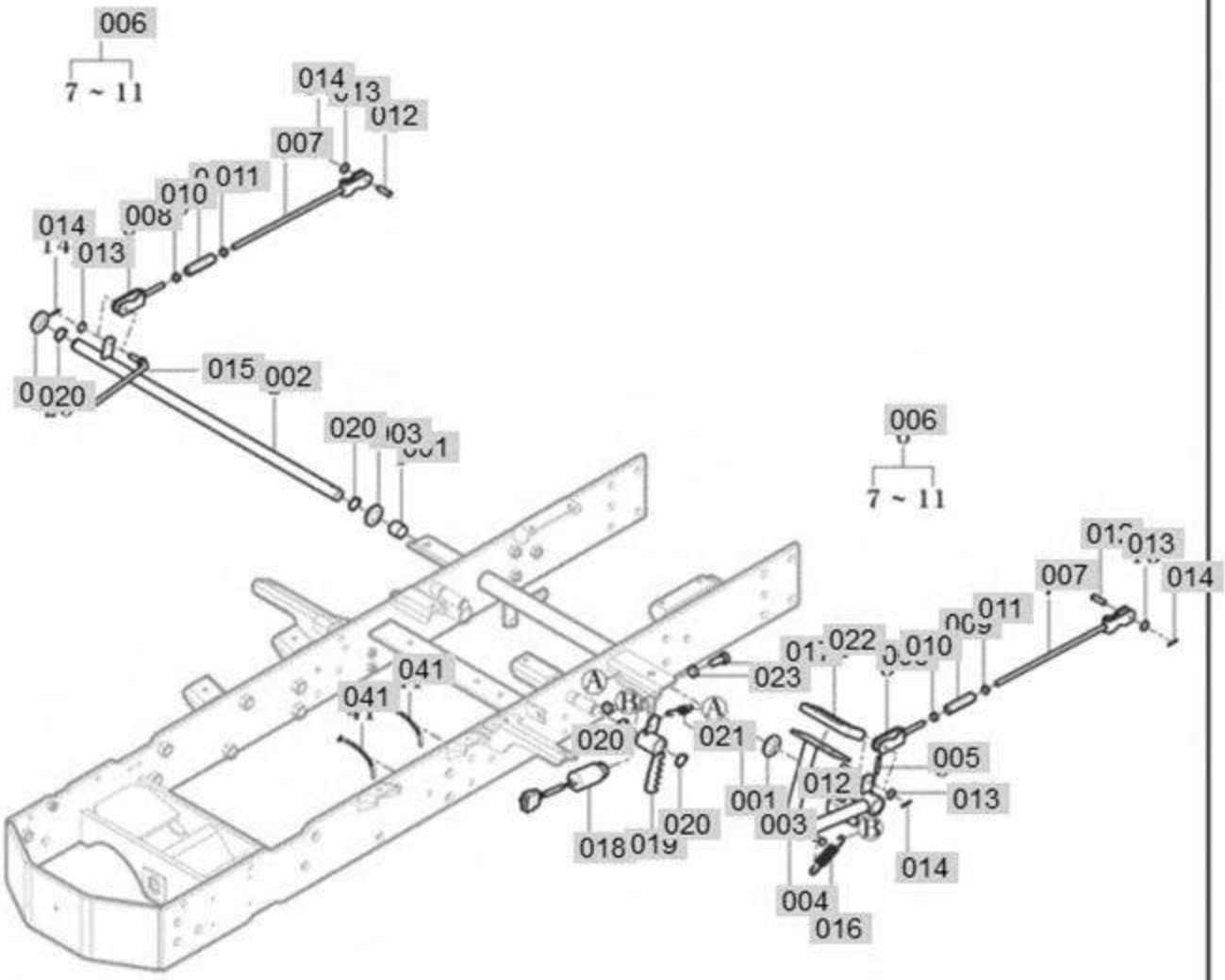

NOTE

FIG 303 Branson 2505h_EU	BRAKE PEDAL & LINKAGE	Year/Month 2020-09

KeyNo.	Part Number	Part Name	Quantity	Other
001	11102320030	BUSH (20X23X20)	2	
002	11103282101A	BRAKE ARM COMP	1	
003	V4111600200	WASHER, PLAIN	3	
004	TA00059656A	PEDAL COMP , BRAKE	1	
005	V5801406032	PIN, SPRING	1	
006	11103284000B	BRAKE ROD ASSY	2	
007	11103284100B	HOOK ROD COMP	2	
008	11103284200	LOCK HOOK (RH) COMP	2	
009	16601220020	TURNBUCKLE (M8,60)	2	
010	V3043600080	NUT	2	
011	15601320073	NUT (SM,LH,M8)	2	
012	21443370020	PIN(08X25)	3	
013	V4111600080	WASHER, PLAIN	4	
014	V5001920015	PIN	4	
015	11103283500B	CRUISE ROD COMP	1	
016	11501330010A	RETURN SPRING	1	
017	V2013608020	BOLT	1	
018	13153285001A	BRAKE SWICH ASSY	1	
019	11103286200A	BRACKET COMP (PARKING)	1	
020	V7041400200	CIR CLIP,EXTERNAL	4	
021	11102320020	SPRING(66)	1	
022	13153280050	PAD	1	
023	V3052600080	NUT	2	
041	14216210380A	CABLETIE (170)	1	

FIG 304-1 Branson 2505h_EU	SPEED CONTROL	Year/Month 2020-09

FIG 304 2505H	SPEED CONTROL	P1	YEAR 2019	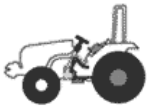

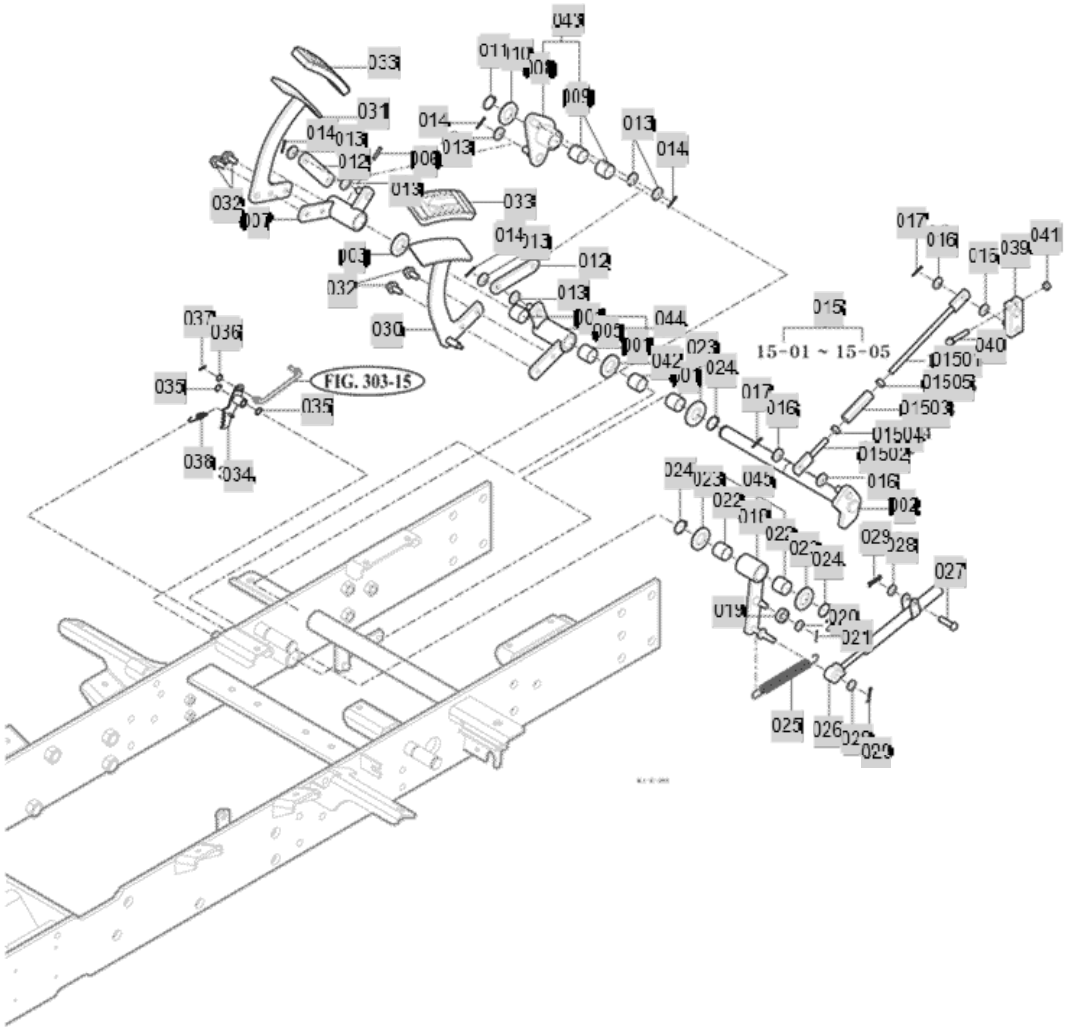

NOTE	

FIG 304-1 Branson 2505h_EU	SPEED CONTROL	Year/Month 2020-09

KeyNo.	Part Number	Part Name	Quantity	Other
001	11102320030	BUSH (20X23X20)	4	
002	11102323102A	PADAL SHAFT COMP	1	
003	V4111600200	WASHER, PLAIN	1	
005	11102323201	ARM COMP	1	
006	V5801406032	PIN, SPRING	1	
007	11102323301	ARM COMP	1	
008	11102323401A	ARM COMP	1	
009	11102320030	BUSH (20X23X20)	2	
010	V4111600200	WASHER, PLAIN	1	
011	V7041400200	CIR CLIP,EXTERNAL	1	
012	11102320010B	LINK	2	
013	V4111600100	WASHER, PLAIN	7	
014	V5001920015	PIN	4	
015	11102325001A	CONTROL ROD ASSY	1	
01501	11102325101A	ROD COMP (LH)	1	
01502	11102325201A	ROD COM (RH)	1	
01503	16601220020	TURNBUCKLE (M8,60)	1	
01504	V3042600080	NUT	1	
01505	15601320073	NUT (SM,LH,M8)	1	
016	V4111600100	WASHER, PLAIN	4	
017	V5001920015	PIN	2	
018	11102324101		1	
019	14722310060	BEARING , BALL	1	
020	V4111600080	WASHER, PLAIN	1	
021	V5001920015	PIN	1	
022	11102320030	BUSH (20X23X20)	2	
023	V4111600200	WASHER, PLAIN	3	
024	V7041400200	CIR CLIP,EXTERNAL	3	
025	14722310033	SPRING (RETURN)	1	
026	11102321000	OIL DAMPER (110)	1	
027	14043120060	PIN (A)	1	
028	V4111600080	WASHER, PLAIN	2	
029	V5601600008	PIN, SNAP	2	
030	TA00059660A	PEDAL COMP , FORWARD	1	
031	TA00059661A	PEDAL COMP , REVERSE	1	
032	V2183608020	BOLT(SP)	4	
033	14722312730	PAD	2	
034	11102326201A	CRUISE BRACKET COMP	1	
035	V7041400150	CIR CLIP,EXTERNAL	2	
036	V4111600080	WASHER, PLAIN	1	
037	V5001920015	PIN	1	
038	11102320020	SPRING(66)	1	
039	11102322100C	HOLDER COMP	1	
040	V2173608045	BOLT(S)	1	
041	V3042600080	NUT	1	

FIG 304-1 Branson 2505h_EU	SPEED CONTROL	Year/Month 2020-09

KeyNo.	Part Number	Part Name	Quantity	Other
042	11102320040	WASHER (32X21X5)	1	
043	11102321200	ARM ASSY	1	
044	11102321100	ARM ASSY	1	
045	11102321300		1	

FIG 304-2 Branson 2505h_EU	SPEED CONTROL(2019~)	Year/Month 2020-09

FIG 304 2505H	SPEED CONTROL	P1	YEAR 2019	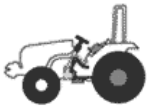

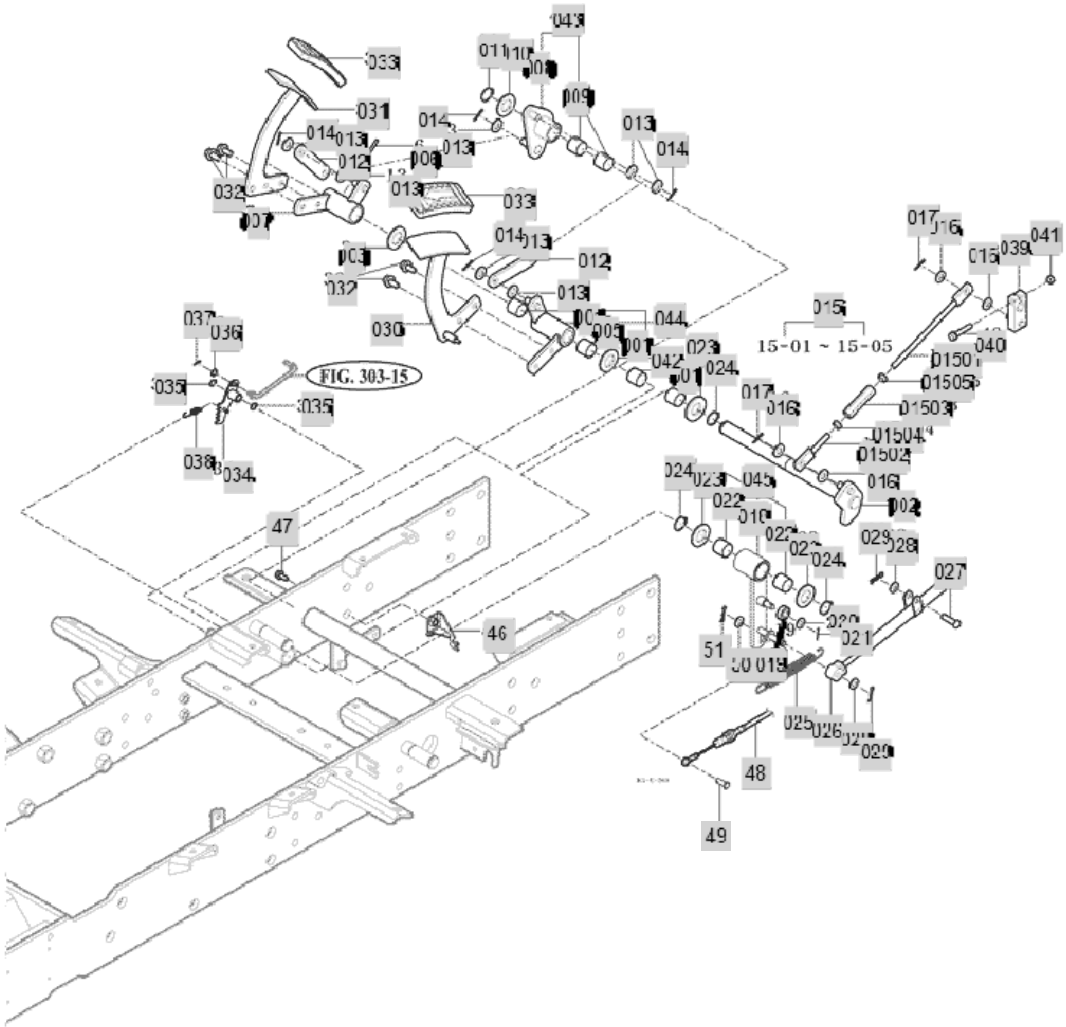

NOTE

FIG 304-2 Branson 2505h_EU	SPEED CONTROL(2019~)	Year/Month 2020-09

KeyNo.	Part Number	Part Name	Quantity	Other
001	11102320030	BUSH (20X23X20)	4	
002	11102323102A	PADAL SHAFT COMP	1	
003	V4111600200	WASHER, PLAIN	1	
005	11102323201	ARM COMP	1	
006	V5801406032	PIN, SPRING	1	
007	11102323301	ARM COMP	1	
008	11102323401A	ARM COMP	1	
009	11102320030	BUSH (20X23X20)	2	
010	V4111600200	WASHER, PLAIN	1	
011	V7041400200	CIR CLIP,EXTERNAL	1	
012	11102320010B	LINK	2	
013	V4111600100	WASHER, PLAIN	7	
014	V5001920015	PIN	4	
015	11102325001A	CONTROL ROD ASSY	1	
01501	11102325101A	ROD COMP (LH)	1	
01502	11102325201A	ROD COM (RH)	1	
01503	16601220020	TURNBUCKLE (M8,60)	1	
01504	V3042600080	NUT	1	
01505	15601320073	NUT (SM,LH,M8)	1	
016	V4111600100	WASHER, PLAIN	4	
017	V5001920015	PIN	2	
018	11102324101		1	
019	14722310060	BEARING , BALL	1	
020	V4111600080	WASHER, PLAIN	1	
021	V5001920015	PIN	1	
022	11102320030	BUSH (20X23X20)	2	
023	V4111600200	WASHER, PLAIN	3	
024	V7041400200	CIR CLIP,EXTERNAL	3	
025	14722310033	SPRING (RETURN)	1	
026	11102321000	OIL DAMPER (110)	1	
027	14043120060	PIN (A)	1	
028	V4111600080	WASHER, PLAIN	2	
029	V5601600008	PIN, SNAP	2	
030	TA00059660A	PEDAL COMP , FORWARD	1	GB
031	TA00059661A	PEDAL COMP , REVERSE	1	GB
032	V2183608020	BOLT(SP)	4	
033	14722312730	PAD	2	
034	11102326201A	CRUISE BRACKET COMP	1	
035	V7041400150	CIR CLIP,EXTERNAL	2	
036	V4111600080	WASHER, PLAIN	1	
037	V5001920015	PIN	1	
038	11102320020	SPRING(66)	1	
039	11102322100C	HOLDER COMP	1	
040	V2173608045	BOLT(S)	1	
041	V3042600080	NUT	1	

FIG 304-2 Branson 2505h_EU	SPEED CONTROL(2019~)	Year/Month 2020-09

KeyNo.	Part Number	Part Name	Quantity	Other
042	11102320040	WASHER (32X21X5)	1	
043	11102321200	ARM ASSY	1	
044	11102321100	ARM ASSY	1	
045	11102321300		1	
46	TA00059662A	PLATE COMP , THROTTLE	1	
47	V2173612035	BOLT(S)	1	
48	10511162200		1	
49	15601160083	PIN(06X16)	1	
50	V4111600060	WASHER, PLAIN	1	
51	V5601600006	PIN, SNAP	1	

FIG 305 2505H	DASH COVER	P1	YEAR 2019	

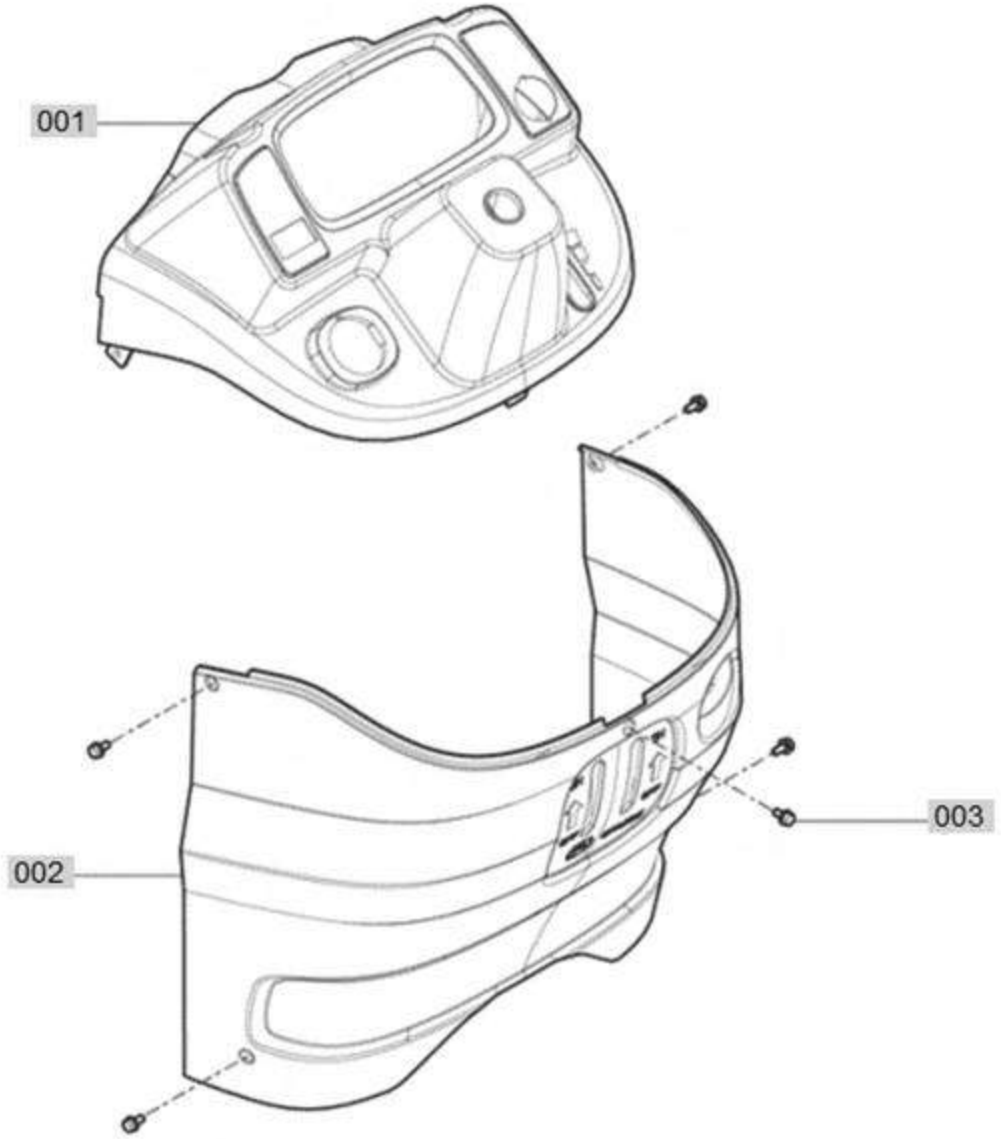

NOTE	

FIG 305 Branson 2505h_EU	DASH COVER	Year/Month 2020-09

KeyNo.	Part Number	Part Name	Quantity	Other
001	11106032111B	DASHCOVER , U	1	
002	11106032211A	DASHCOVER, D	1	
003	V2123806020	BOLT(SP)	5	

FIG 306	STEERING VALVE	P1	YEAR	
2505H			2019	

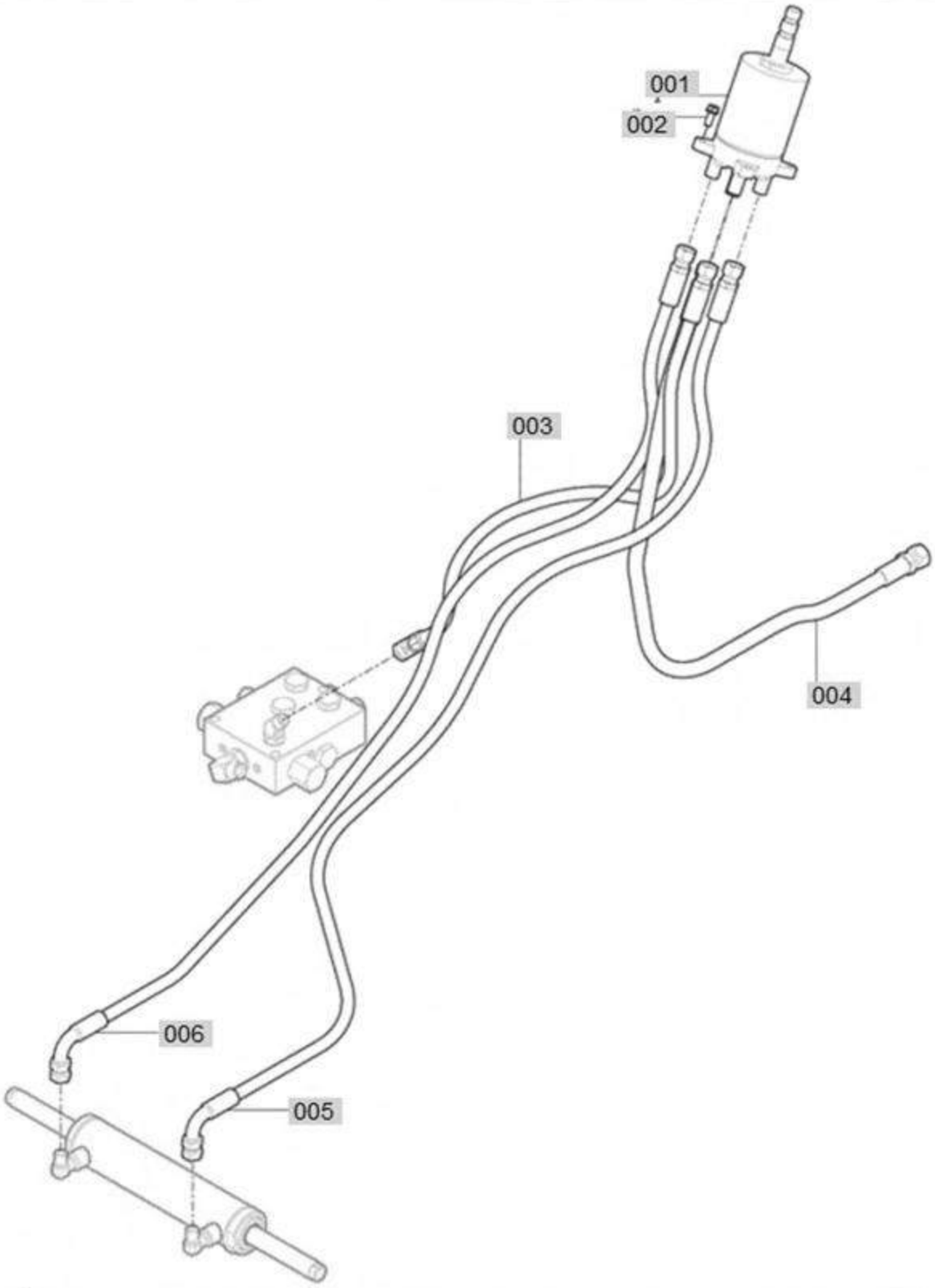

NOTE

FIG 306 Branson 2505h_EU	STEERING VALVE	Year/Month 2020-09

KeyNo.	Part Number	Part Name	Quantity	Other
001	11104051001C	STEERING CONTROL UNIT(2505H)	1	
002	V2173608025	BOLT(S)	4	
003	11115103100	HYD HOSE ASSY (PUMP/740)	1	
004	11105103200A	HYD HOSE ASSY (DRAIN/1000)	1	
005	11105103301	HYD HOSE ASSY(STEERING LH)	1	
006	11105103401	HYD HOSE ASSY(STEERING RH)	1	

FIG 307 2505H	STEERING CYLINDER	P1	YEAR 2019	

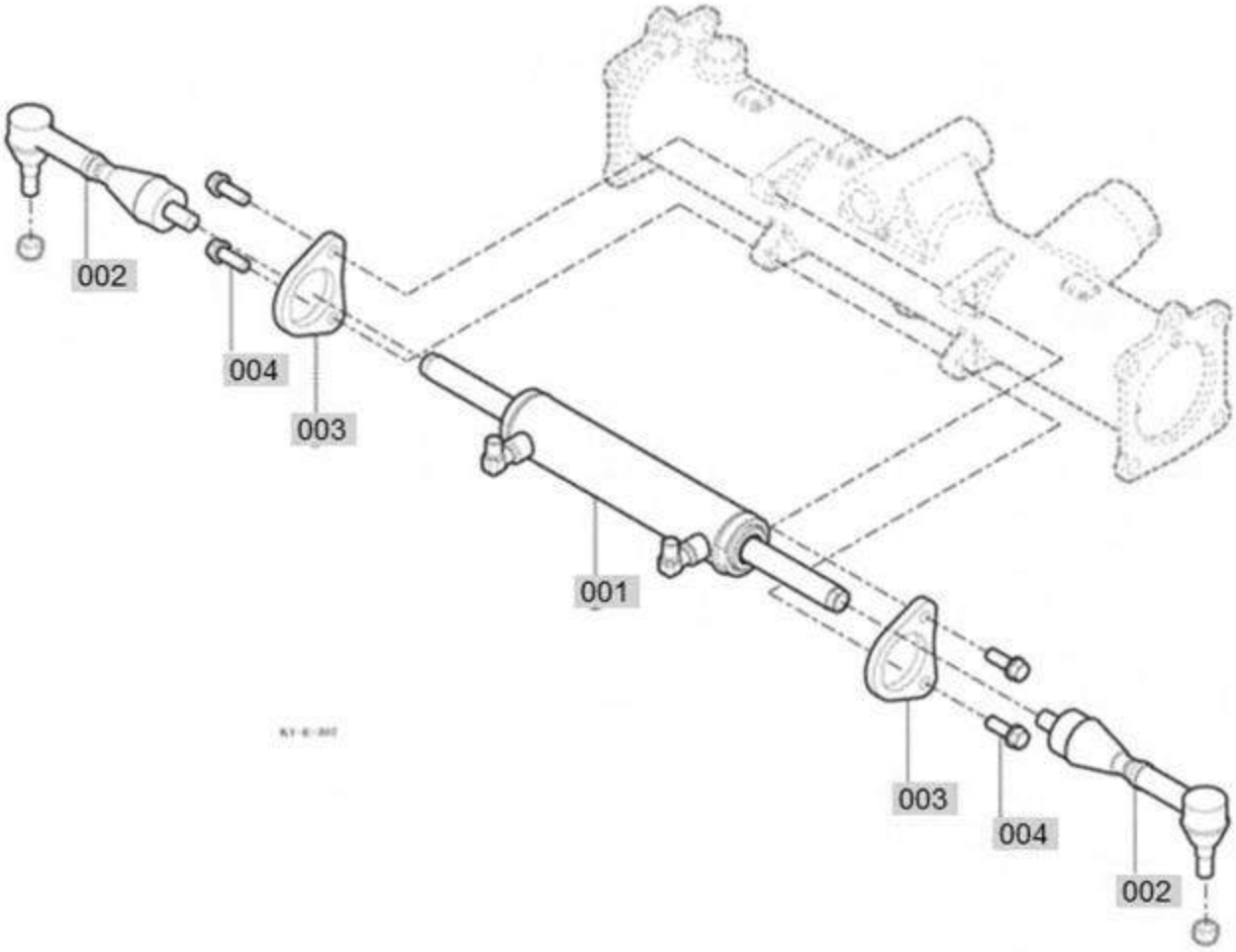

NOTE	

FIG 307 Branson 2505h_EU	STEERING CYLINDER	Year/Month 2020-09

KeyNo.	Part Number	Part Name	Quantity	Other
001	11104055100	CYLINDER ASSY	1	
002	11104055000B	BALL JOINT ASSY	2	
003	11104120020	CYLINDER STAY	2	
004	V2173610030	BOLT(S)	4	

FIG 308 2505H	STEERING WHEEL	P1	YEAR 2019	

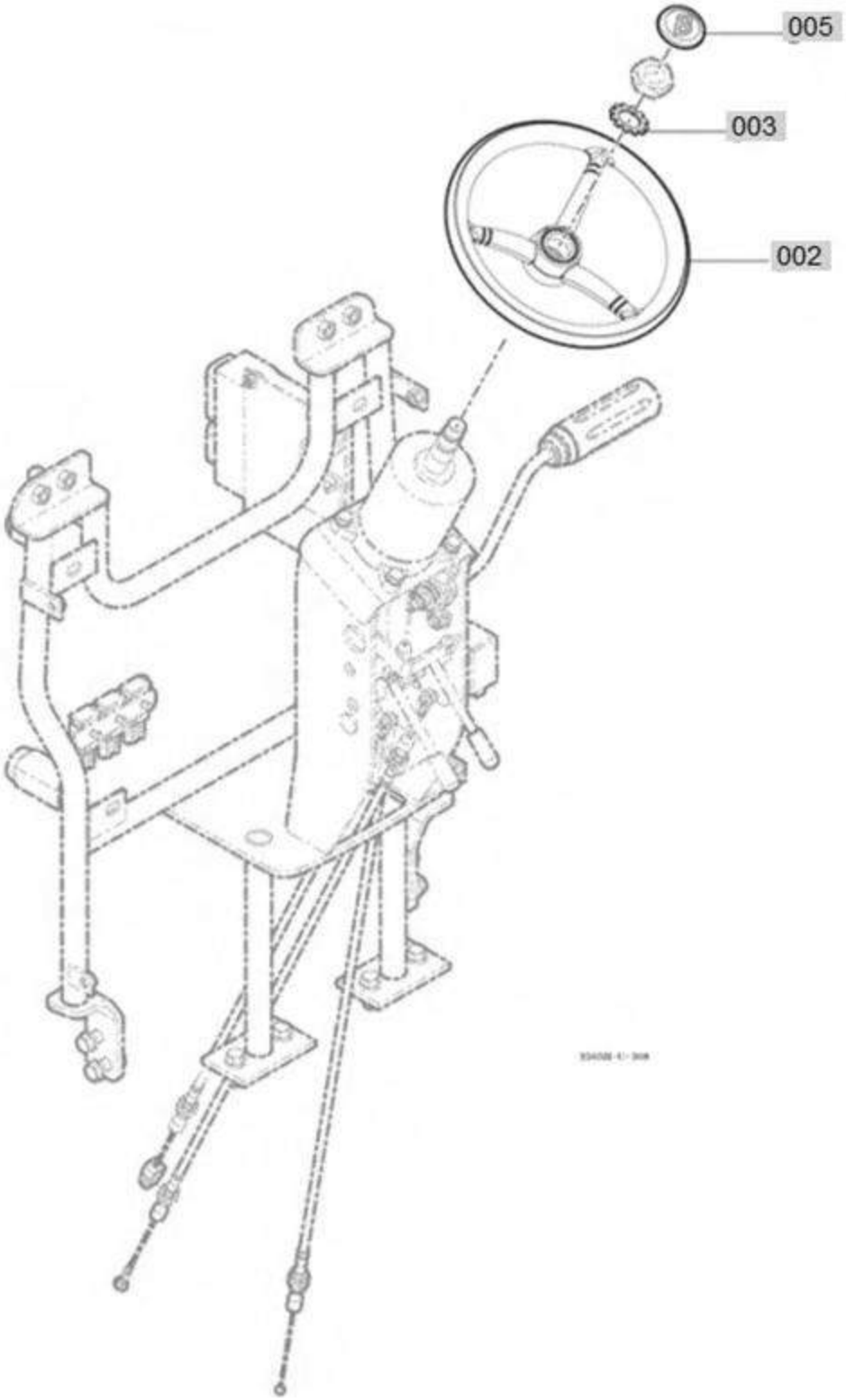

NOTE	

FIG 308 Branson 2505h_EU	STEERING WHEEL	Year/Month 2020-09

KeyNo.	Part Number	Part Name	Quantity	Other
002	13834012100	STEERING WHEEL	1	
003	13834012200	WASHER , TOOTH-LOCK/OUT	1	
005	11684012300	CAP(BRANSON) , STEERING WHEEL	1	

FIG 309 2505H	WHEEL	P1	YEAR 2019	

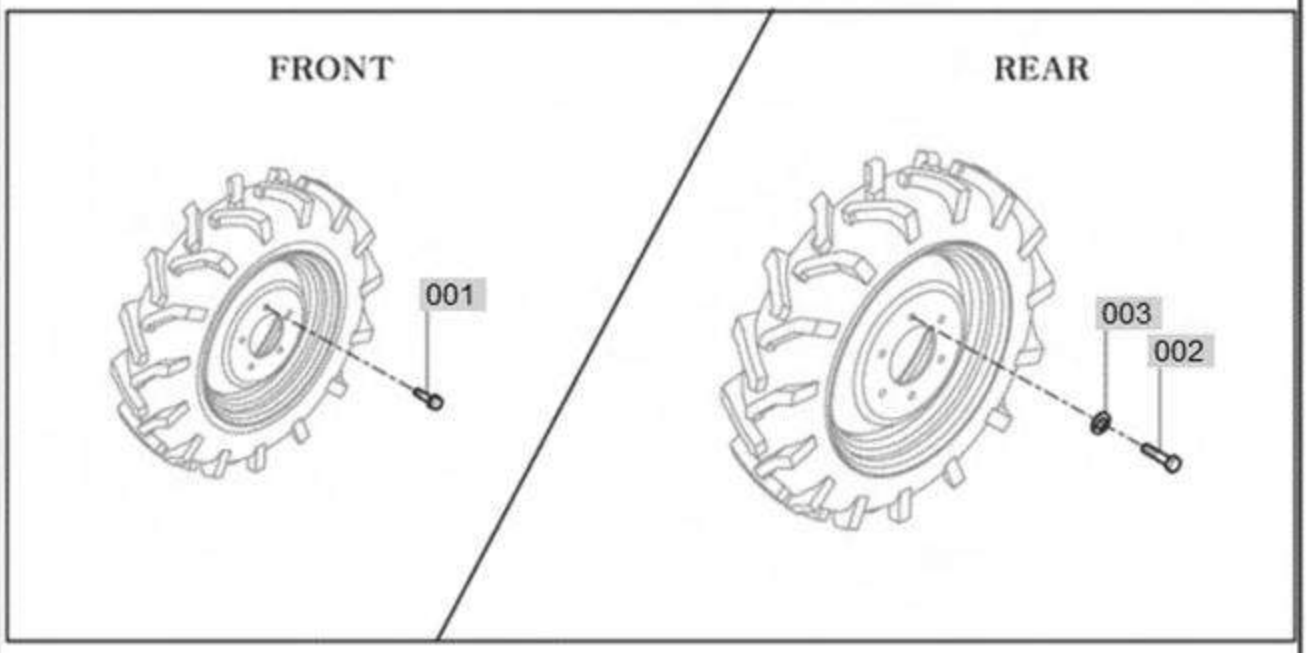

NOTE	

FIG 309A Branson 2505h_EU	WHEEL	Year/Month 2020-09

KeyNo.	Part Number	Part Name	Quantity	Other
001	V2173612030	BOLT(S)	10	
002	V2013614030	BOLT	12	
003	V4011600140	WASHER, SPRING	12	

FIG 401 2505H	INPUT SHAFT	P1	YEAR 2019	

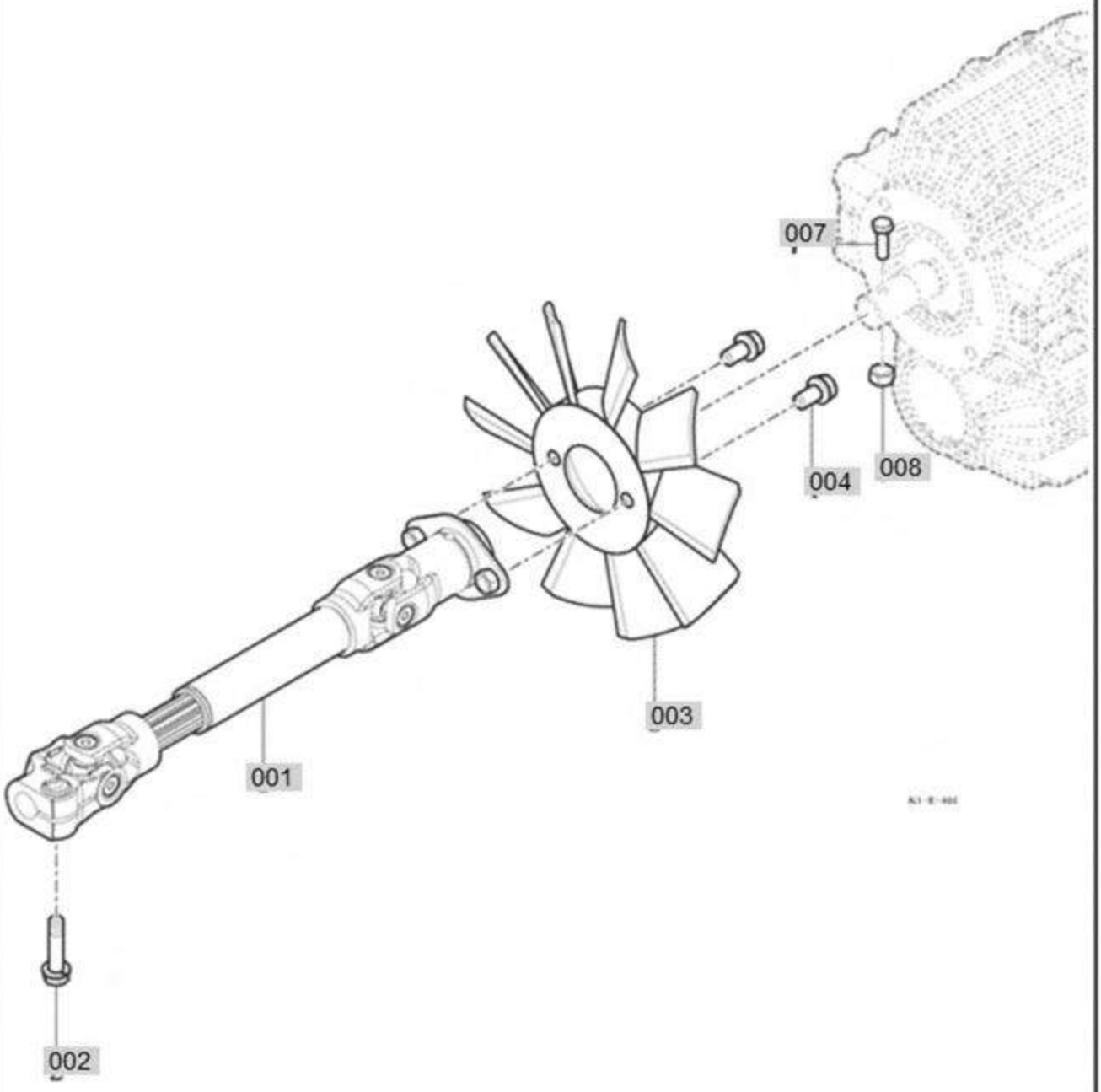

NOTE	

FIG 401 Branson 2505h_EU	INPUT SHAFT	Year/Month 2020-09

KeyNo.	Part Number	Part Name	Quantity	Other
001	TA00059633A	SHAFT ASSY , INPUT	1	
002	V2173608035	BOLT(S)	1	
003	11102010010	FAN ASSY , COOLING	1	
004	V2183608020	BOLT(SP)	2	
007	V2053606045	BOLT	1	
008	19027210060	NUT (M6)	1	

FIG 402 2505H	HST	P1	YEAR 2019	

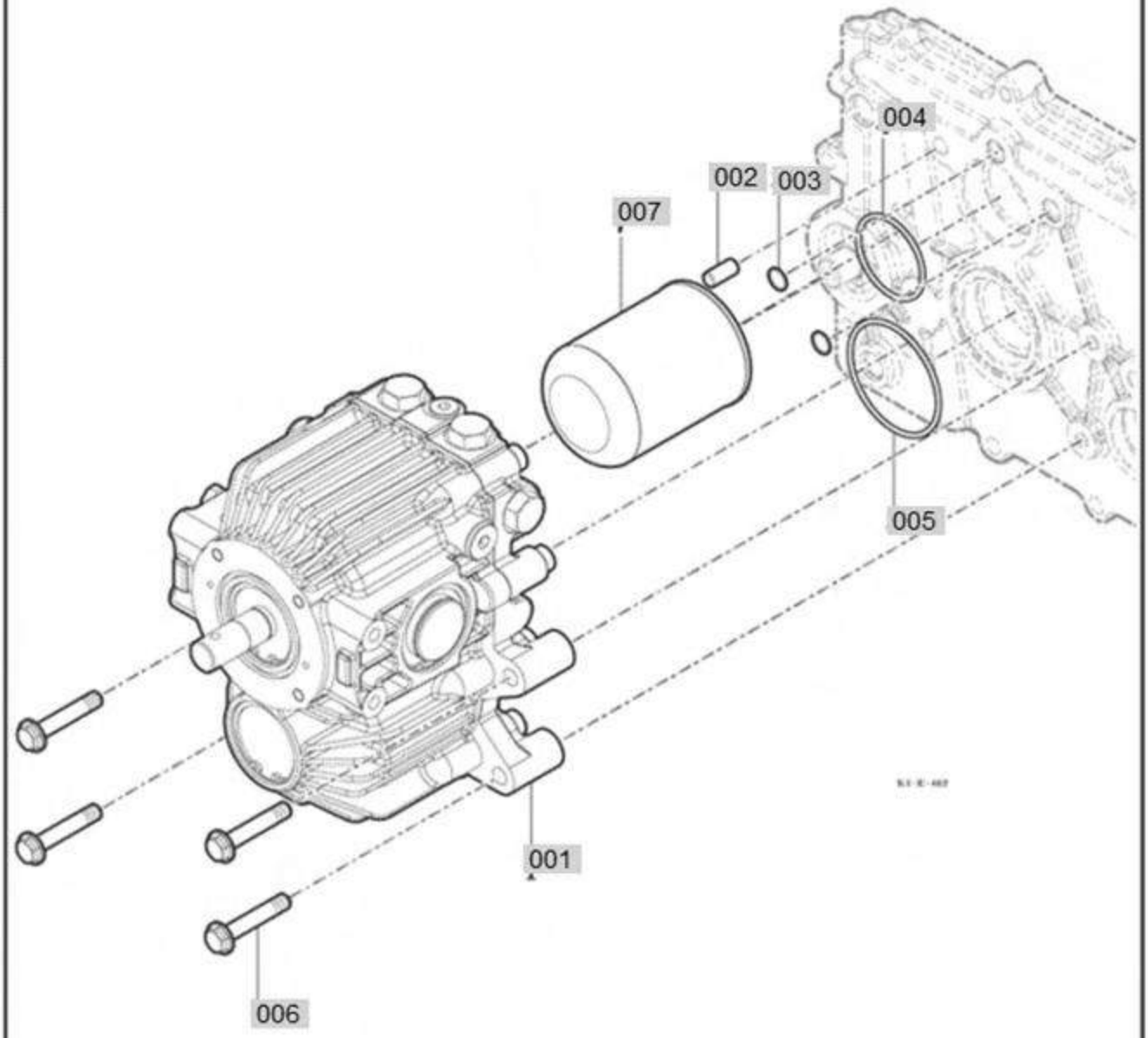

NOTE	

FIG 402 Branson 2505h_EU	HST	Year/Month 2020-09

KeyNo.	Part Number	Part Name	Quantity	Other
001	11102302000E	HST ASSY , 20CC	1	
002	V5201010018	PIN, STRAIGHT (A)	1	
003	V7201024010	O RING(P)	2	
004	V7211031050	O RING(P)	1	
005	V7211031070	O RING(P)	1	
006	V2403610055	BOLT	4	
007	11102303100A	HST FILTER COMP	1	

FIG 403 2505H	INPUT GEAR	P1	YEAR 2019	

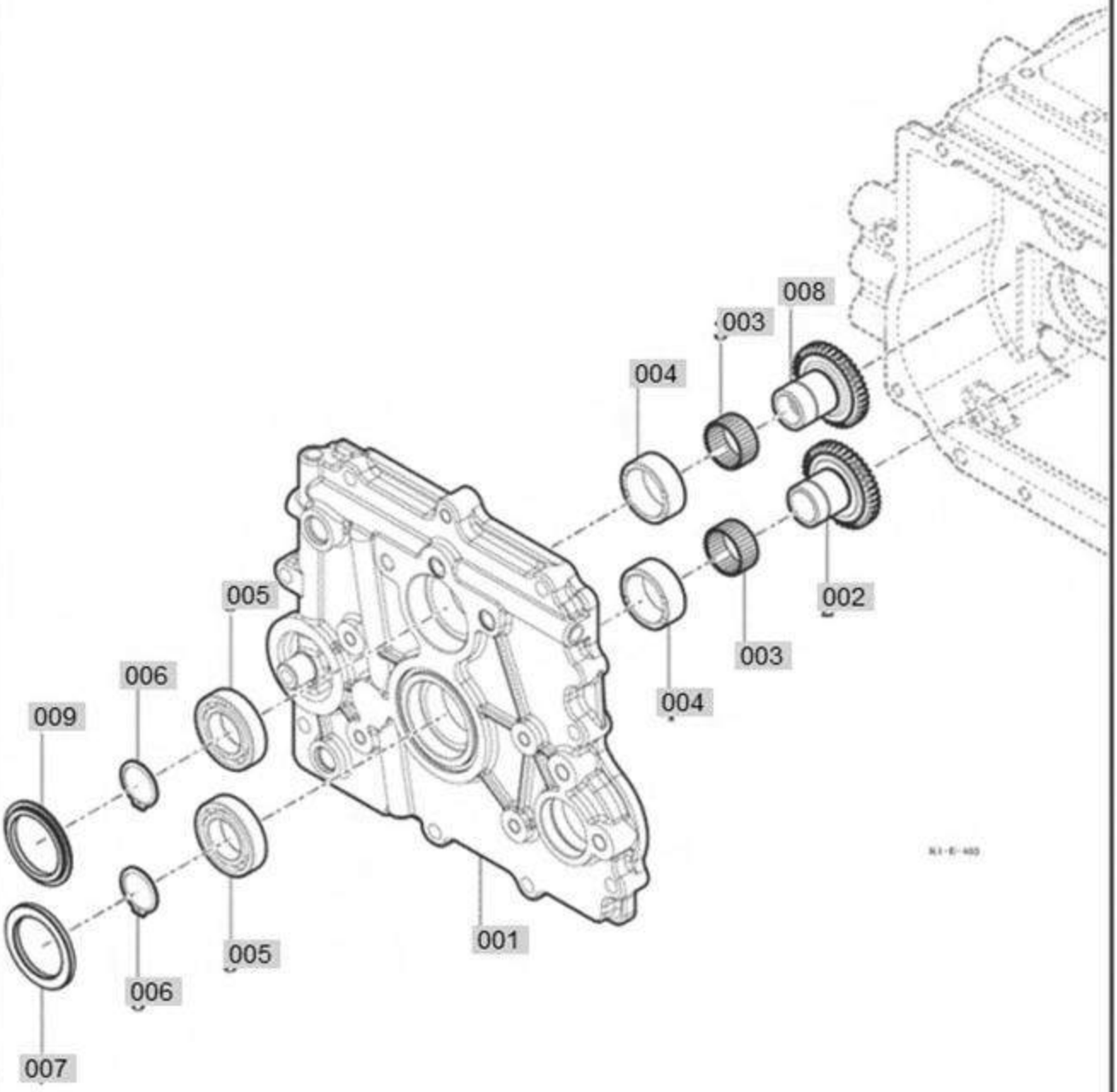

NOTE	

FIG 403 Branson 2505h_EU	INPUT GEAR	Year/Month 2020-09

KeyNo.	Part Number	Part Name	Quantity	Other
001	TA00059663A	METAL , INPUT	1	
002	11202312111	INPUT GEAR (14)	1	
003	V6544323717	BEARING, NEEDLE	2	
004	11102312120A	COLLAR (45X37X18)	2	
005	V6001106006	BEARING, BALL	2	
006	V7041400300	CIR CLIP,EXTERNAL	2	
007	11102312131	WASHER (55X40X4)	1	
008	11102510011	PTO GEAR (18)	1	
009	11102510020A	WASHER (55)	1	

FIG 404 2505H	RANGE GEAR	P1	YEAR 2019	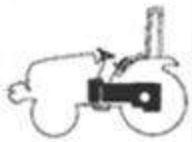

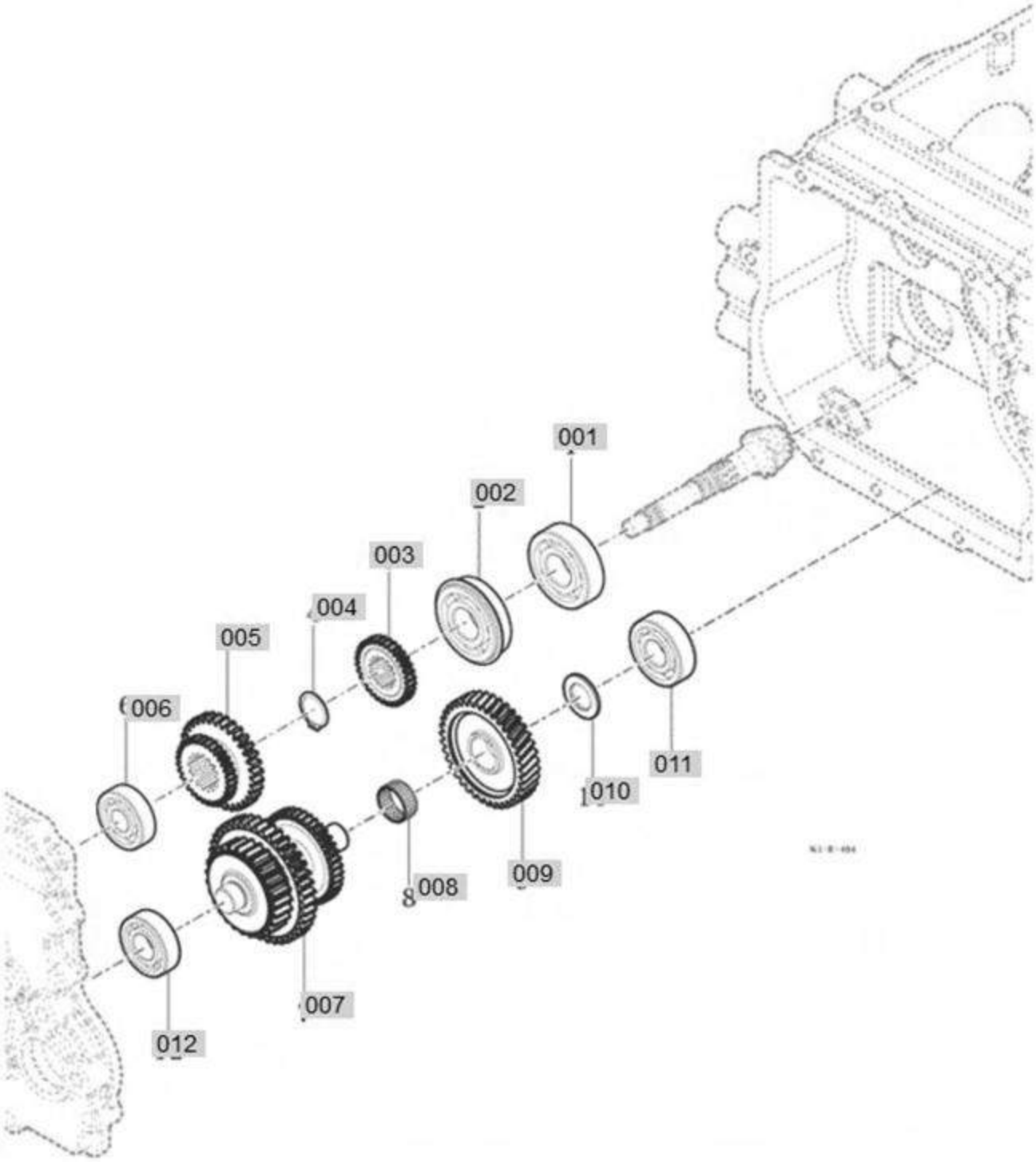

NOTE	

FIG 404 Branson 2505h_EU	RANGE GEAR	Year/Month 2020-09

KeyNo.	Part Number	Part Name	Quantity	Other
001	V6041106305	BEARING, BALL (HL1)	1	
002	V6001606305	BEARING, BALL	1	
003	11102611010	4WD PINION (18)	1	
004	V7041400250	CIR CLIP,EXTERNAL	1	
005	11102411010B	SUB SHIFT (16-27)	1	
006	V6041106303	BEARING, BALL (HL1)	1	
007	11202421010B	SUB GEAR	1	
008	V6544252913	BEARING, NEEDLE	1	
009	11102611020A	4WD IDLE (32)	1	
010	14602130030	WASHER (20X34X03)	1	
011	V6001106304	BEARING, BALL	1	
012	V6001106204	BEARING, BALL	1	

FIG 405 2505H	4WD DRIVE GEAR	P1	YEAR 2019	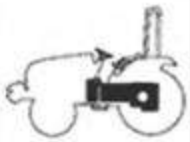

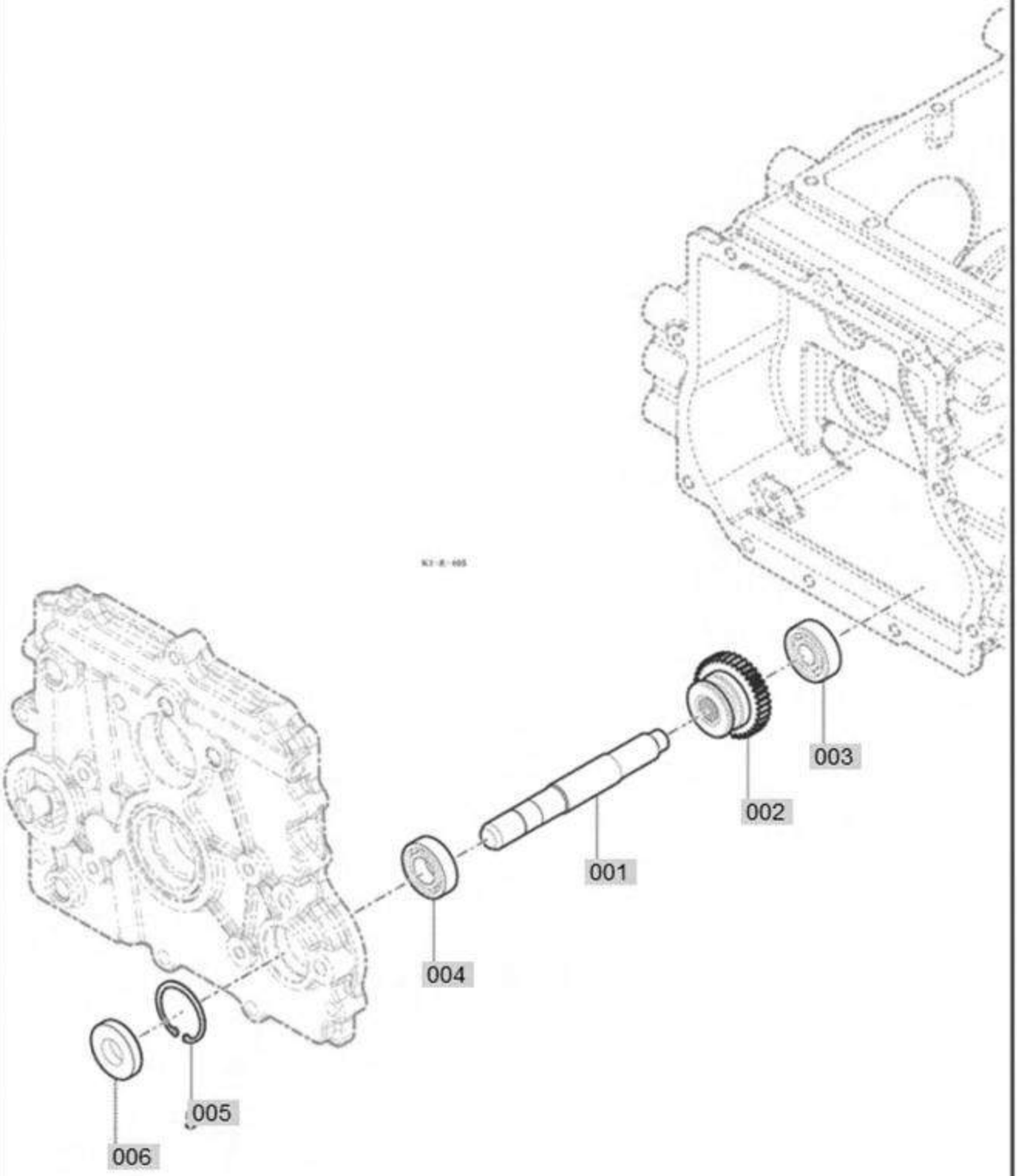

NOTE	

FIG 405 Branson 2505h_EU	4WD DRIVE GEAR	Year/Month 2020-09

KeyNo.	Part Number	Part Name	Quantity	Other
001	11102610010	4WD SHAFT	1	
002	11102610020A	4WD GEAR (22)	1	
003	V6001106302	BEARING, BALL	1	
004	V6001106004	BEARING, BALL	1	
005	V7051400420	CIR CLIP, INTERNAL	1	
006	V7441204208	SEAL, OIL (D)	1	

FIG 406 2505H	P.T.O DRIVE SHAFT	P1	YEAR 2019	

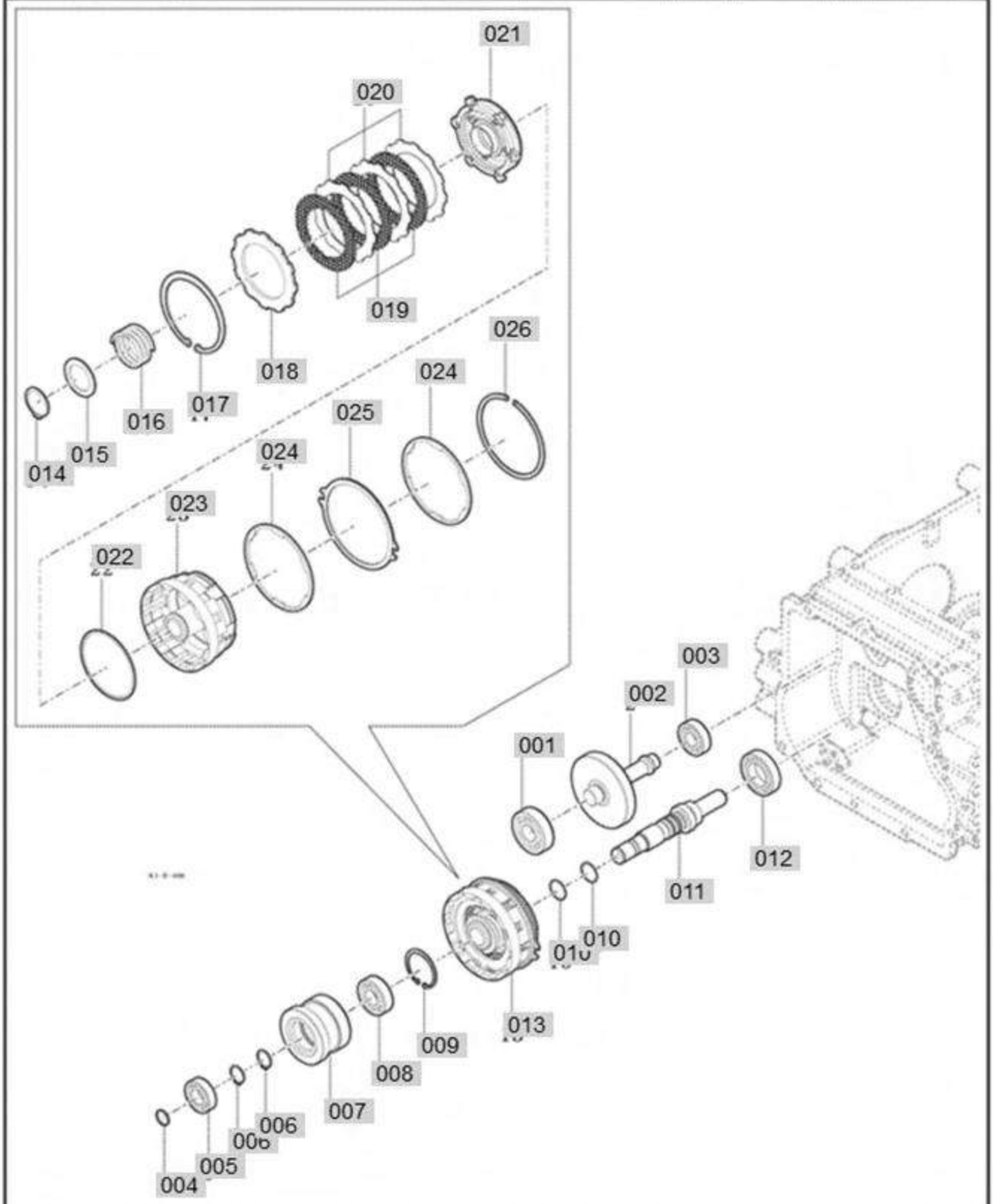

NOTE

FIG 406 Branson 2505h_EU	P.T.O DRIVE SHAFT	Year/Month 2020-09

KeyNo.	Part Number	Part Name	Quantity	Other
001	V6001106304	BEARING, BALL	1	
002	11102511010	PTO IDLE (33)	1	
003	V6001106203	BEARING, BALL	1	
004	11102522041A	SEAL (20)	1	
005	V6001106004	BEARING, BALL	1	
006	V7041400200	CIR CLIP,EXTERNAL	2	
007	11102522031	HUB (PTO CLUTCH)	1	
008	V6001106204	BEARING, BALL	1	
009	V7051400470	CIR CLIP, INTERNAL	1	
010	V7201024021	O RING(P)	2	
011	11102522011	PTO CLUTCH SHAFT	1	
012	V6001106006	BEARING, BALL	1	
013	11102521000	PTO CLUTCH ASSY	1	
014	V7041400350	CIR CLIP,EXTERNAL	1	
015	11102521090	COLLAR	1	
016	11102521040	SPRING	1	
017	V7051401000	CIR CLIP, INTERNAL	1	
018	11102521070	PLATE(BACK)	1	
019	11102521060	CLUTCH DISK	3	
020	11102521050	PLATE	3	
021	11102521020	PISTON	1	
022	11102521030	D RING	1	
023	11102521010	CASE	1	
024	11102521120	PLATE (BRAKE)	2	
025	11102521110	DISK (BRAKE)	1	
026	11102521130	C RING	1	

FIG 407 2505H	P.T.O SHAFT	P1	YEAR 2019	

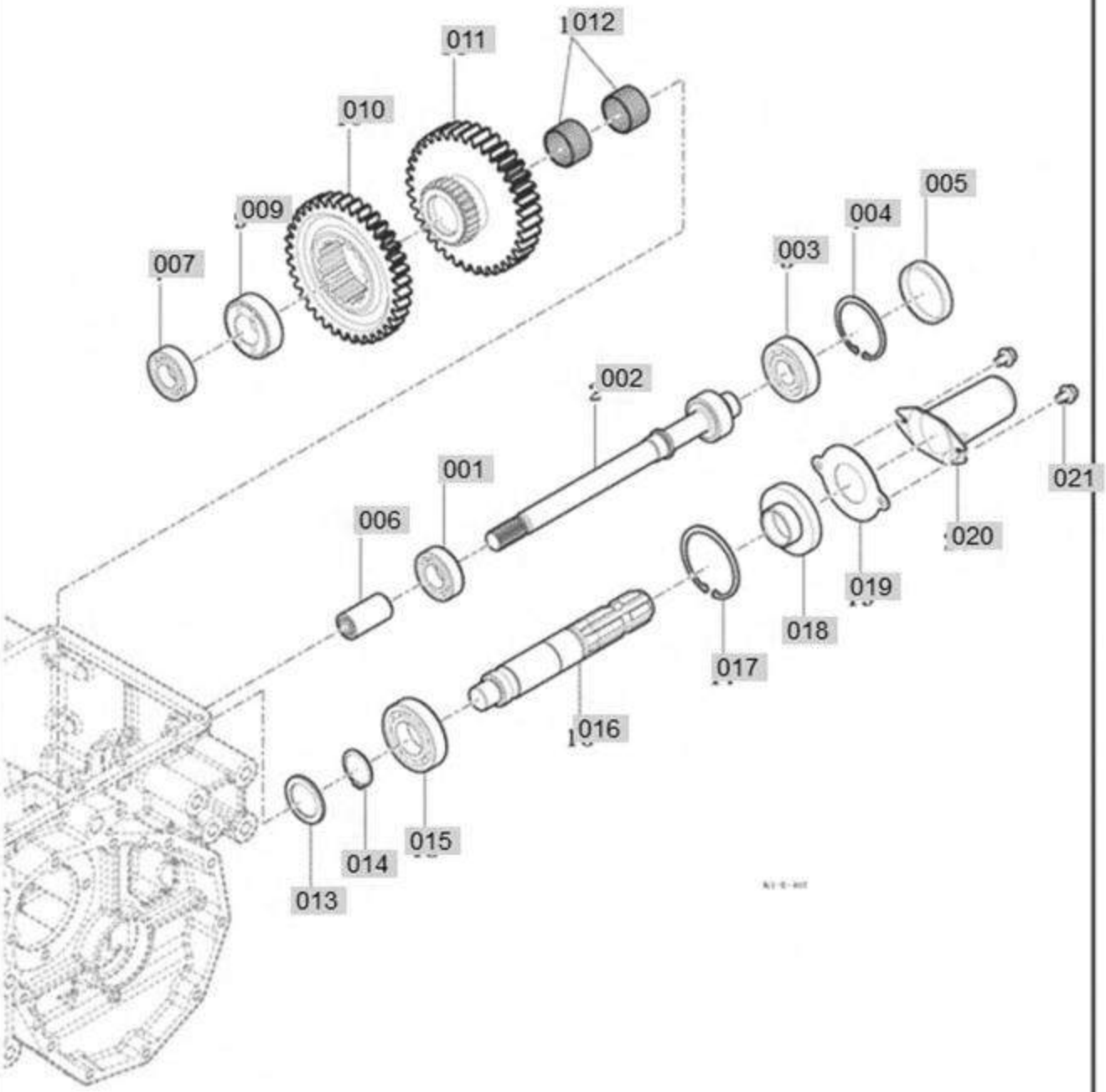

NOTE	

FIG 407 Branson 2505h_EU	P.T.O SHAFT	Year/Month 2020-09

KeyNo.	Part Number	Part Name	Quantity	Other
001	V6001106205	BEARING, BALL	1	
002	11202520011A	PTO COUNTER SHAFT	1	
003	V6001106305	BEARING, BALL	1	
004	V7051400620	CIR CLIP, INTERNAL	1	
005	14443140080	SEAL (62)	1	
006	14211340190	COUPLING	1	
007	V6001106205	BEARING, BALL	1	
009	11202530050	HUB (35X62X27)	1	
010	11202530030A	GEAR (41)	1	
011	11202530022	PTO GEAR	1	
012	V6544354026	BEARING, NEEDLE	2	
013	19022160031A	COLLAR (35X50X4)	1	
014	V7041400350	CIR CLIP,EXTERNAL	1	
015	V6001106207	BEARING, BALL	1	
016	11102530011	PTO SHAFT	1	
017	V7051400720	CIR CLIP, INTERNAL	1	
018	16322732000B	SEAL (OIL) ASSY	1	
019	16322730040	COVER(PLATE)	1	
020	14443140091D	PTO SHAFT CAP	1	
021	V2183608016	BOLT(SP)	2	

FIG 408 2505H	MID P.T.O GEAR	P1	YEAR 2019	

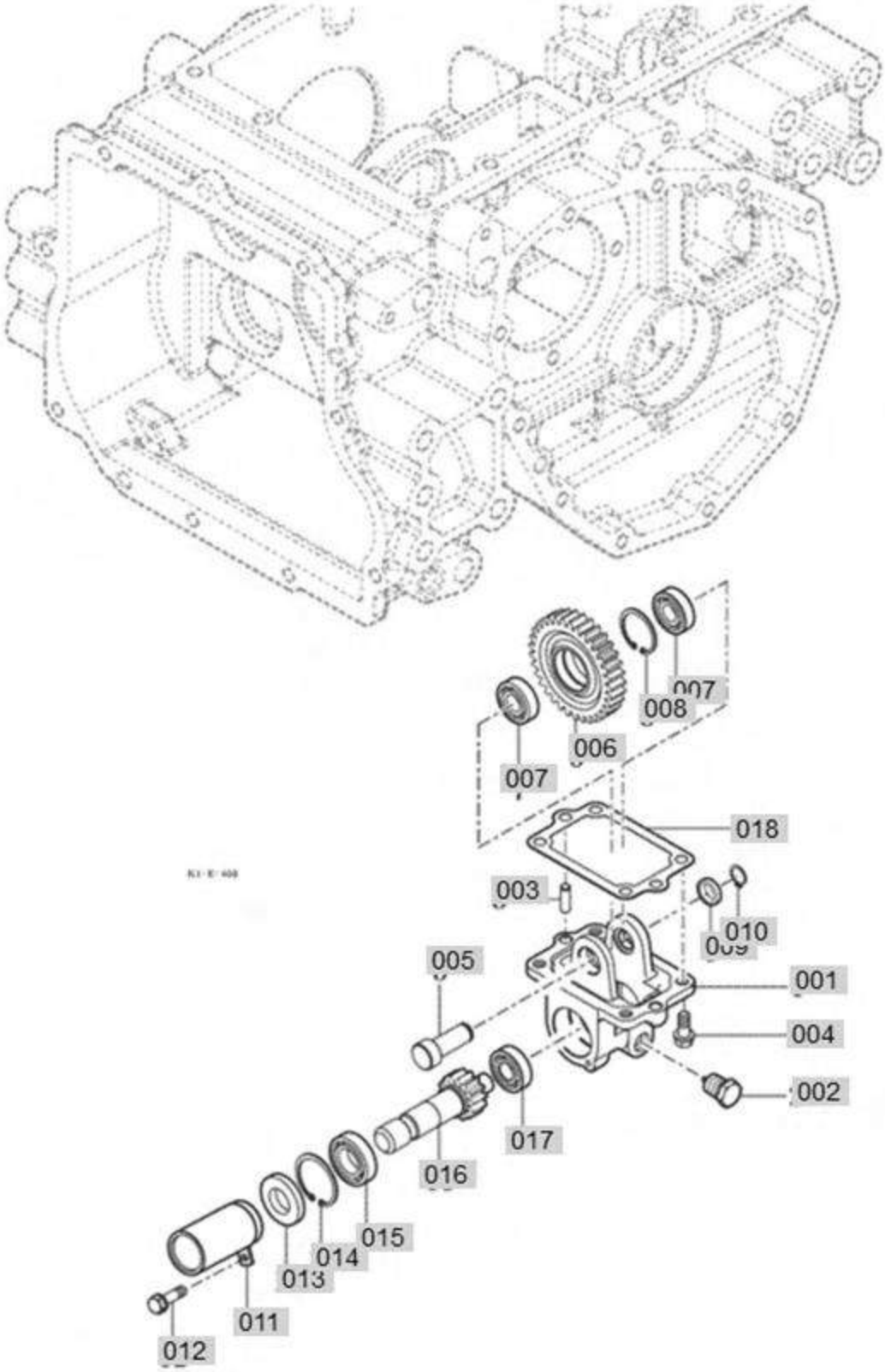

NOTE	

FIG 408 Branson 2505h_EU	MID P.T.O GEAR	Year/Month 2020-09

KeyNo.	Part Number	Part Name	Quantity	Other
001	TA00059643A	MID PTO CASE	1	
002	16701015001	MAGNET PLUG ASSY	1	
003	V5201010022	PIN, STRAIGHT (A)	2	
004	V2173610025	BOLT(S)	4	
005	13152710020	MID PTO COUNTER SHAFT	1	
006	11102712110	GEAR(32)	1	
007	V6001106203	BEARING, BALL	2	
008	V7051400400	CIR CLIP, INTERNAL	1	
009	14722710040	COLLAR (17X24X6)	1	
010	V7041400170	CIR CLIP,EXTERNAL	1	
011	14722702100A	PTO SHAFT CAP(MID)	1	
012	V2113606012	BOLT(S)	1	
013	V7441254708	SEAL, OIL (D)	1	
014	V7051400470	CIR CLIP, INTERNAL	1	
015	V6001106005	BEARING, BALL	1	
016	13152710010B	MID PTO SHAFT	1	
017	V6001106203	BEARING, BALL	1	
018	13152401021	GASKET (MID PTO)	1	

FIG 409 2505H	DIFF LOCK	P1	YEAR 2019	

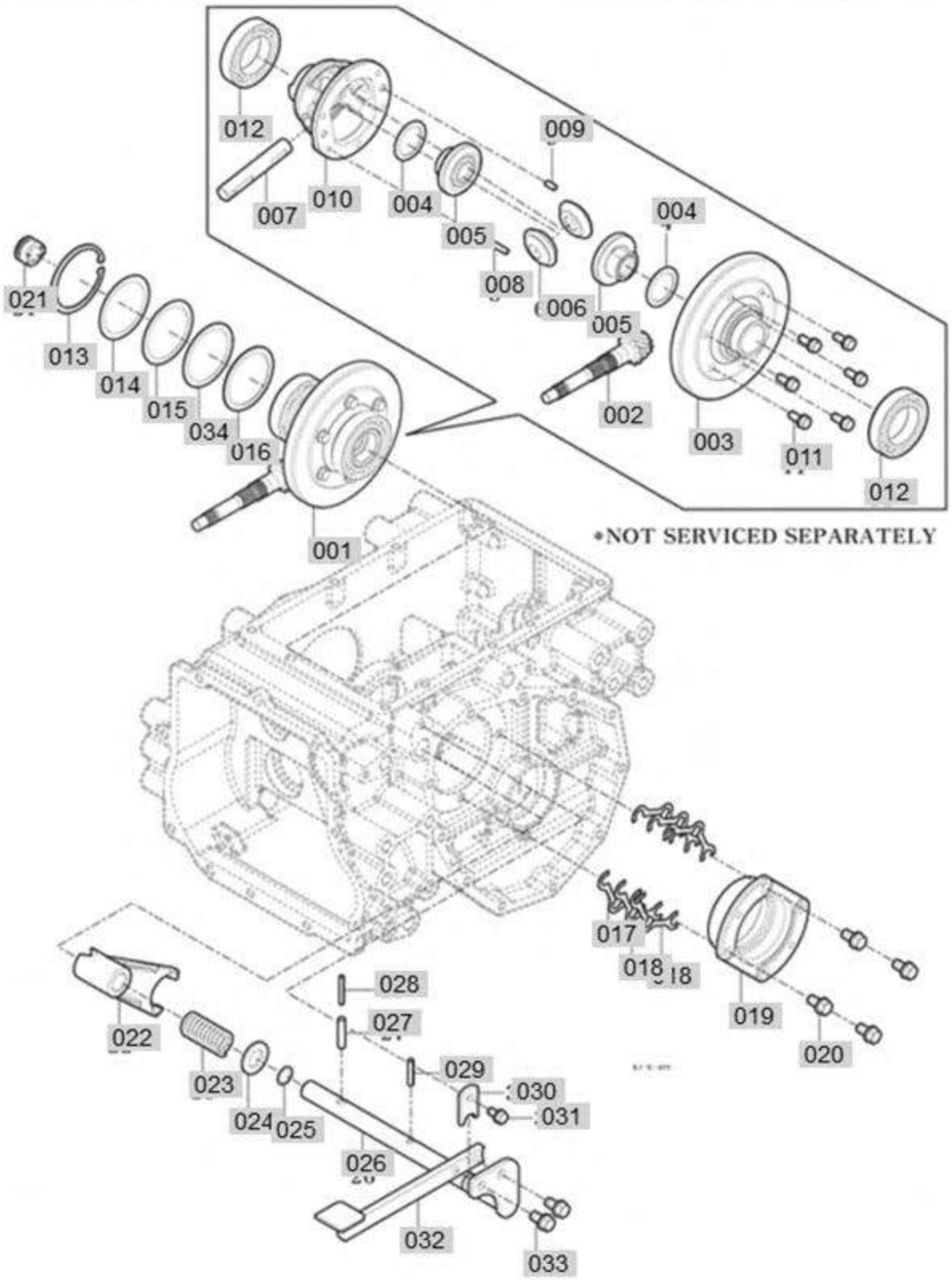

•NOT SERVICED SEPARATELY

NOTE	

FIG 409 Branson 2505h_EU	DIFF LOCK	Year/Month 2020-09

KeyNo.	Part Number	Part Name	Quantity	Other
001	11103002000	DIFF ASSY , RR	1	
002	11103002110B	DRIVE PINION (8)	1	
003	11103002120B	GEAR (BEVEL/49)	1	
004	13153180080A	THRUST WASHER (34X46X1)	2	
005	11103180030A	DIFF GEAR (20)	2	
006	11103180040A	DIFF PINION (15)	2	
007	11103180070A	DIFF PINION SHAFT	1	
008	V5201006032	PIN, STRAIGHT (A)	1	
009	V5201006012	PIN, STRAIGHT (A)	1	
010	TA00059664A	CASE , DIFF	1	
011	V2173608020	BOLT(S)	6	
012	V6001106009	BEARING, BALL	2	
013	V7051400750	CIR CLIP, INTERNAL	1	
014	16703180511	SHIM (O/0.5)	1	
015	16703180171	SHIM (RH/0.2)	1	
016	16703180181	SHIM (RH/0.1)	1	
017	13153181020A	SHIM (LH/0.1)	2	
018	13153181030A	SHIM (LH/0.2)	4	
019	TA00059667A	METAL , DIFF CASE	1	
020	V2173610025	BOLT(S)	4	
021	11103190020A	DIFF LOCK CLUTCH	1	
022	TA00059770A	FORK , DIFF LOCK	1	
023	17973030420	SPRING	1	
024	V4111600200	WASHER, PLAIN	1	
025	V7201024016	O RING(P)	1	
026	11103192100D	DIFF LOCK SHAFT COMP	1	
027	V5801408036	PIN, SPRING	1	
028	V5801405036	PIN, SPRING	1	
029	V5801406032	PIN, SPRING	1	
030	16703180191	PLATE	1	
031	V2173608016	BOLT(S)	1	
032	15993162000B	PADAL(DIFF LOCK)COMP	1	
033	V2173610020	BOLT(S)	2	
034	11103180190	SHIM (75)	1	

FIG 410 2505H	REAR TRANSMISSION CASE	P1	YEAR 2019	

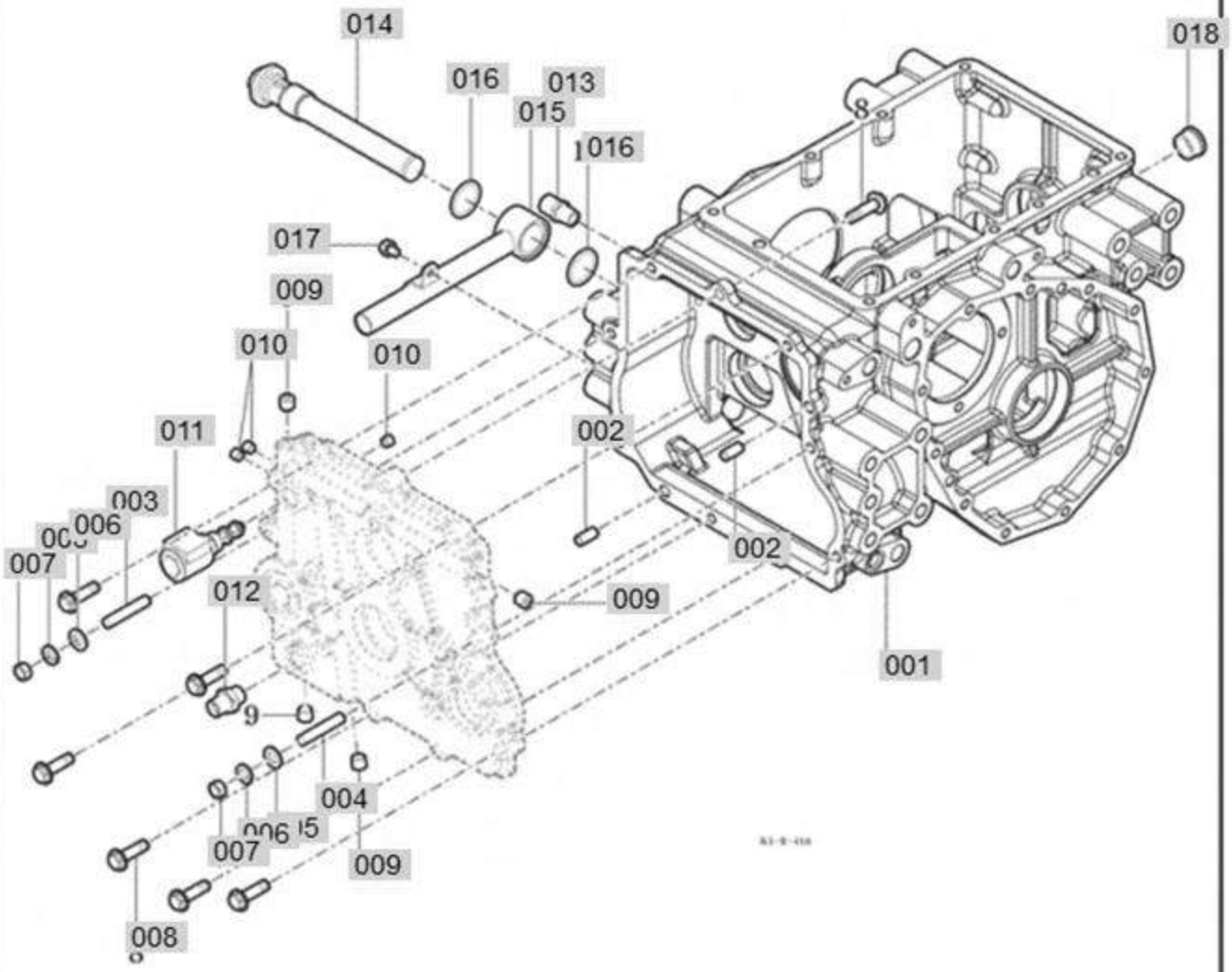

NOTE	

FIG 410 Branson 2505h_EU	REAR TRANSMISSION CASE	Year/Month 2020-09

KeyNo.	Part Number	Part Name	Quantity	Other
001	TA00059668A	CASE , REAR TM	1	
002	V5201010018	PIN, STRAIGHT (A)	2	
003	V2514410050	STUD, BOLT	1	
004	V2514410050	STUD, BOLT	1	
005	V4111600100	WASHER, PLAIN	2	
006	V4011600100	WASHER, SPRING	2	
007	V3043600100	NUT	2	
008	V2403610035	BOLT	7	
009	V7801000004	PLUG	4	
010	V7801000002	PLUG	3	
011	11102303200A	PTO SOL VALVE	1	
012	16994080072B	UNION (SHORT)	1	
013	16994080061B	UNION (PT3/8,M18)	1	
014	11105152100	SUB TO ->TA00052605A STRAINER, SUCTION	1	
015	11105153100B	PIPE COMP	1	
016	V7201035030	O RING(P)	2	
017	V2173608012	BOLT(S)	1	
018	11103062000	OIL GUIDE ASSY	1	

FIG 411 2505H	REAR AXLE HOUSING	P1	YEAR 2019	

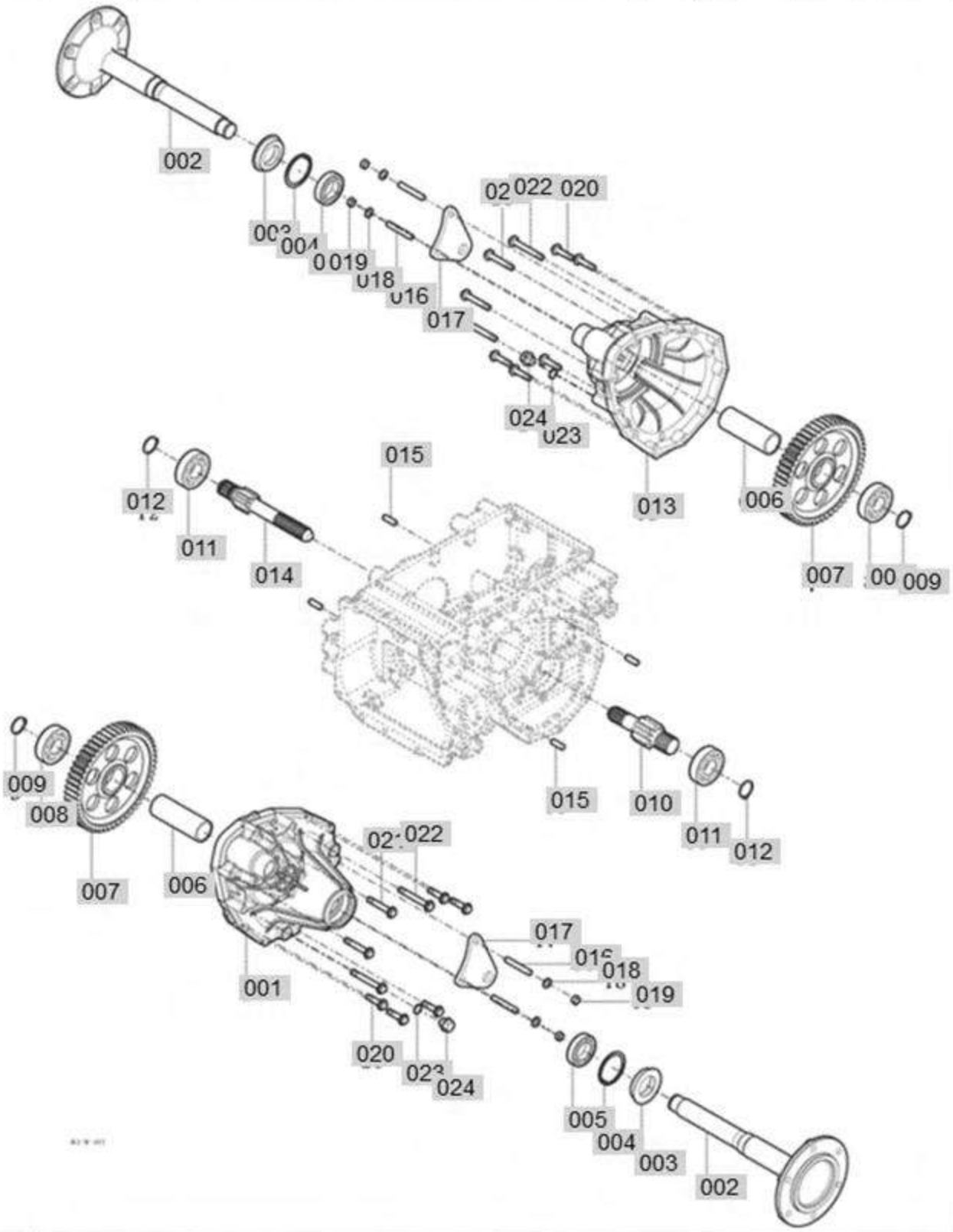

NOTE

FIG 411 Branson 2505h_EU	REAR AXLE HOUSINGS	Year/Month 2020-09

KeyNo.	Part Number	Part Name	Quantity	Other
001	TA00059635A	HOUSING , REAR AXLE LH	1	M
002	TA00058421A	WHEEL SHAFT	2	M
003	20113230040	OIL SEAL (406212)	2	
004	V7051400620	CIR CLIP, INTERNAL	2	
005	V6001106007	BEARING, BALL	2	
006	11103240040A	COLLAR (43X35X119)	2	
007	11203240020	WHEEL GEAR (59)	2	
008	V6001106306	BEARING, BALL	2	
009	V7041400300	CIR CLIP,EXTERNAL	2	
010	11203230010A	WHEEL PINON SHAFT (LH/9T)	1	
011	V6001106306	BEARING, BALL	2	
012	V7041400300	CIR CLIP,EXTERNAL	2	
013	TA00059636A	HOUSING , REAR AXLE RH	1	M
014	11203230020A	WHEEL PINON SHAFT (RH/9T)	1	
015	V5201010018	PIN, STRAIGHT (A)	4	
016	V2514412060	STUD, BOLT	4	
017	11105200040A	PLATE(LOWER LINK)	2	GB
018	V4011600100	WASHER, SPRING	4	
019	V3043600120	NUT	4	
020	V2403610040	BOLT	10	
021	V2403610060	BOLT	4	
022	V2403610075	BOLT	4	
023	V7201024016	O RING(P)	2	
024	11102400020	PLUG (M16)	2	

FIG 412 2505H	RANGE SHIFT LEVER	P1	YEAR 2019	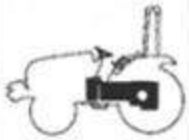

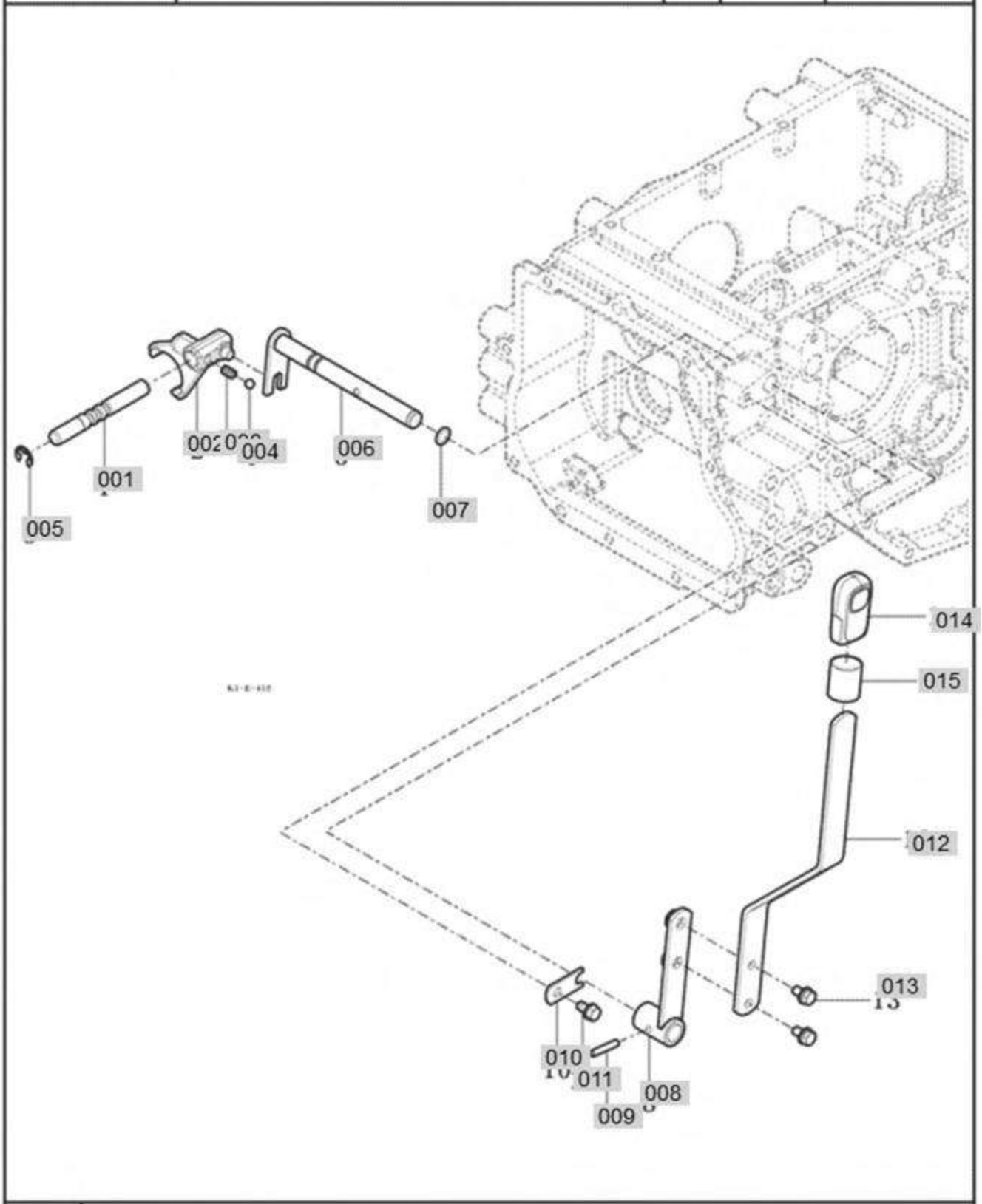

NOTE

FIG 412 Branson 2505h_EU	RANGE SHIFT LEVER	Year/Month 2020-09

KeyNo.	Part Number	Part Name	Quantity	Other
001	11102430020B	SUB STAY	1	
002	TA00059666A	FORK , RANGE	1	
003	13022250030B	SHIFTER SPRING	1	
004	V6802000010	BALL	1	
005	V7081400100	CIR CLIP	1	
006	11102432100	SUB HOOK COMP	1	
007	V7201024012	O RING(P)	1	
008	11102432201A	SUB LEVER COMP	1	
009	V5801406032	PIN, SPRING	1	
010	16702230371	PLATE	1	
011	V2173608016	BOLT(S)	1	
012	TA00059665A	LEVER , RANGE	1	
013	V2183608020	BOLT(SP)	2	
014	11106073030B	GRIP , 4WD	1	
015	11103160020B	TUBE (60)	1	

FIG 413 2505H	P.T.O CHANGE LEVER	P1	YEAR 2019	

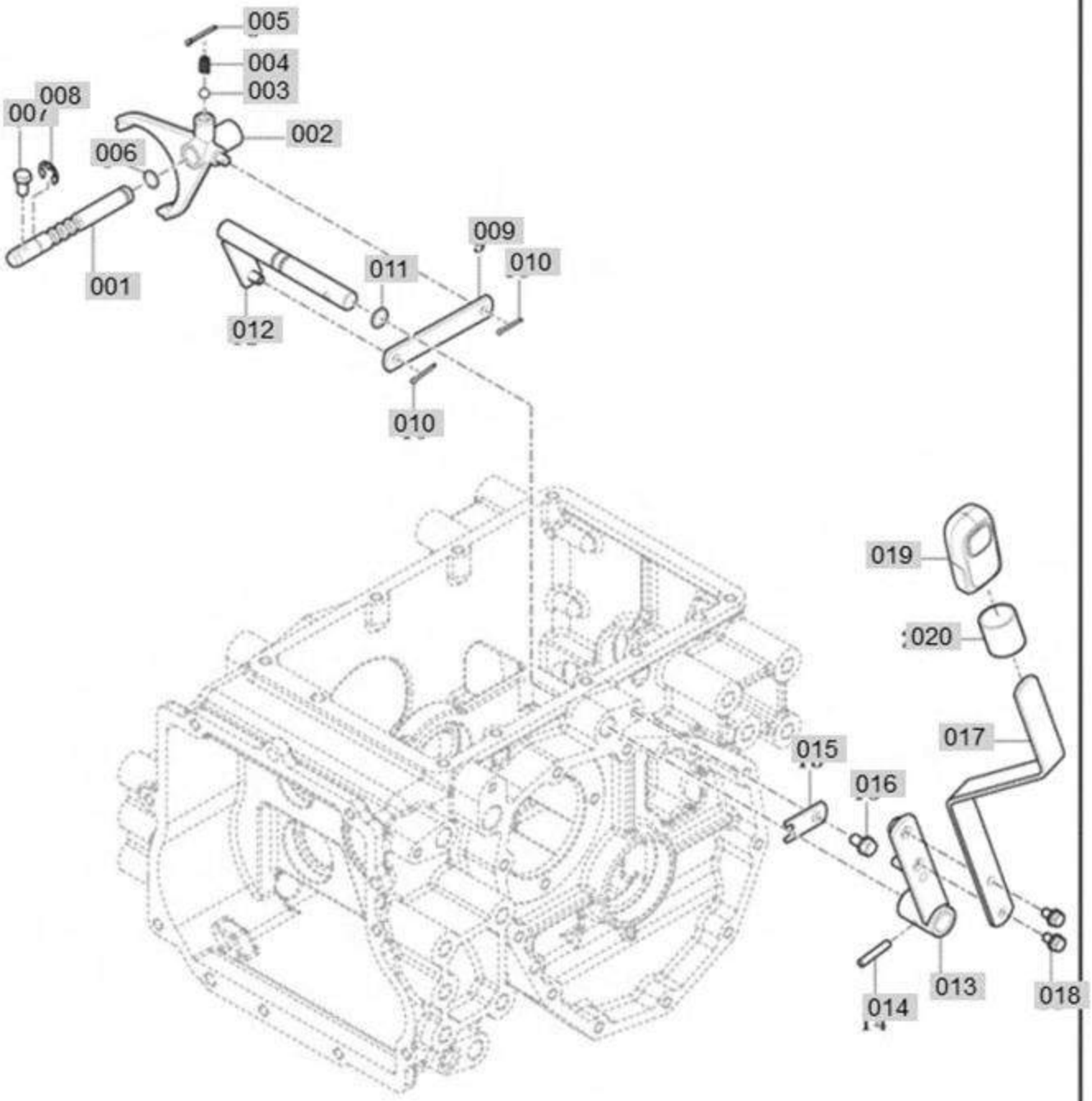

NOTE	

FIG 413 Branson 2505h_EU	P.T.O CHANGE LEVER	Year/Month 2020-09

KeyNo.	Part Number	Part Name	Quantity	Other
001	11102540021	PTO STAY	1	
002	TA00059669A	FORK , PTO	1	
003	V6802000010	BALL	1	
004	13022250030B	SHIFTER SPRING	1	
005	V5001930025	PIN	1	
006	V7201024010	O RING(P)	1	
007	15602231610	BOLT(SET/M8X16)	1	
008	V7081400100	CIR CLIP	1	
009	11102540031	PTO LINK	1	
010	V5001925020	PIN	2	
011	V7201024012	O RING(P)	1	
012	11102542101	PTO ARM COMP	1	
013	11102542202	PTO LEVER COMP	1	
014	V5801406032	PIN, SPRING	1	
015	16702230371	PLATE	1	
016	V2173608016	BOLT(S)	1	
017	TA00059670A	LEVER , PTO	1	
018	V2183608020	BOLT(SP)	2	
019	11106073040A	GRIP, PTO	1	
020	11103160020B	TUBE (60)	1	

FIG 414 2505H	4WD CHANGE LEVER	P1	YEAR 2019	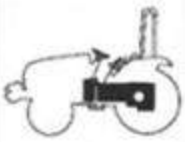

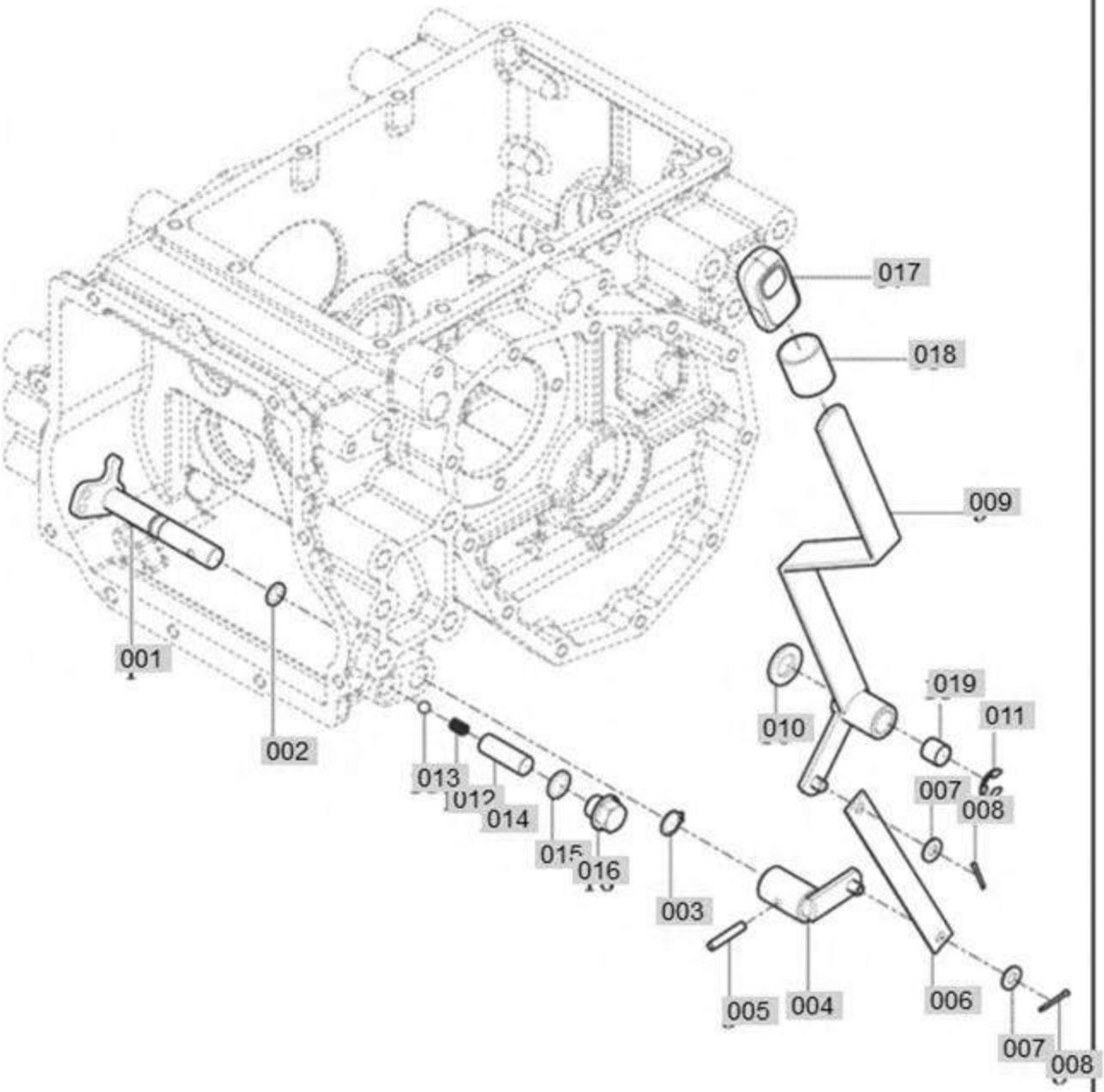

NOTE

FIG 414 Branson 2505h_EU	4WD CHANGE LEVER	Year/Month 2020-09

KeyNo.	Part Number	Part Name	Quantity	Other
001	11102632100A	4WD FORK COMP	1	
002	V7201024012	O RING(P)	1	
003	V7041400160	CIR CLIP,EXTERNAL	1	
004	11102632200	4WD ARM COMP	1	
005	V5801406032	PIN, SPRING	1	
006	TA00059634A	LINK , 4WD	1	
007	V4111600080	WASHER, PLAIN	2	
008	V5001925020	PIN	2	
009	11102633101	4WD LEVER COMP	1	
010	V4111600160	WASHER, PLAIN	1	
011	V7081400120	CIR CLIP	1	
012	V6802000010	BALL	1	
013	13022250030B	SHIFTER SPRING	1	
014	11102630020	BALL GUIDE	1	
015	V7201024016	O RING(P)	1	
016	11102400020	PLUG (M16)	1	
017	11106073030B	GRIP , 4WD	1	
018	11103160020B	TUBE (60)	1	
019	17995070270	BUSH (16X18X33)	1	

FIG 415 2505H	TRANSMISSION MOUNTING	P1	YEAR 2019	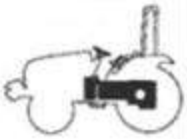

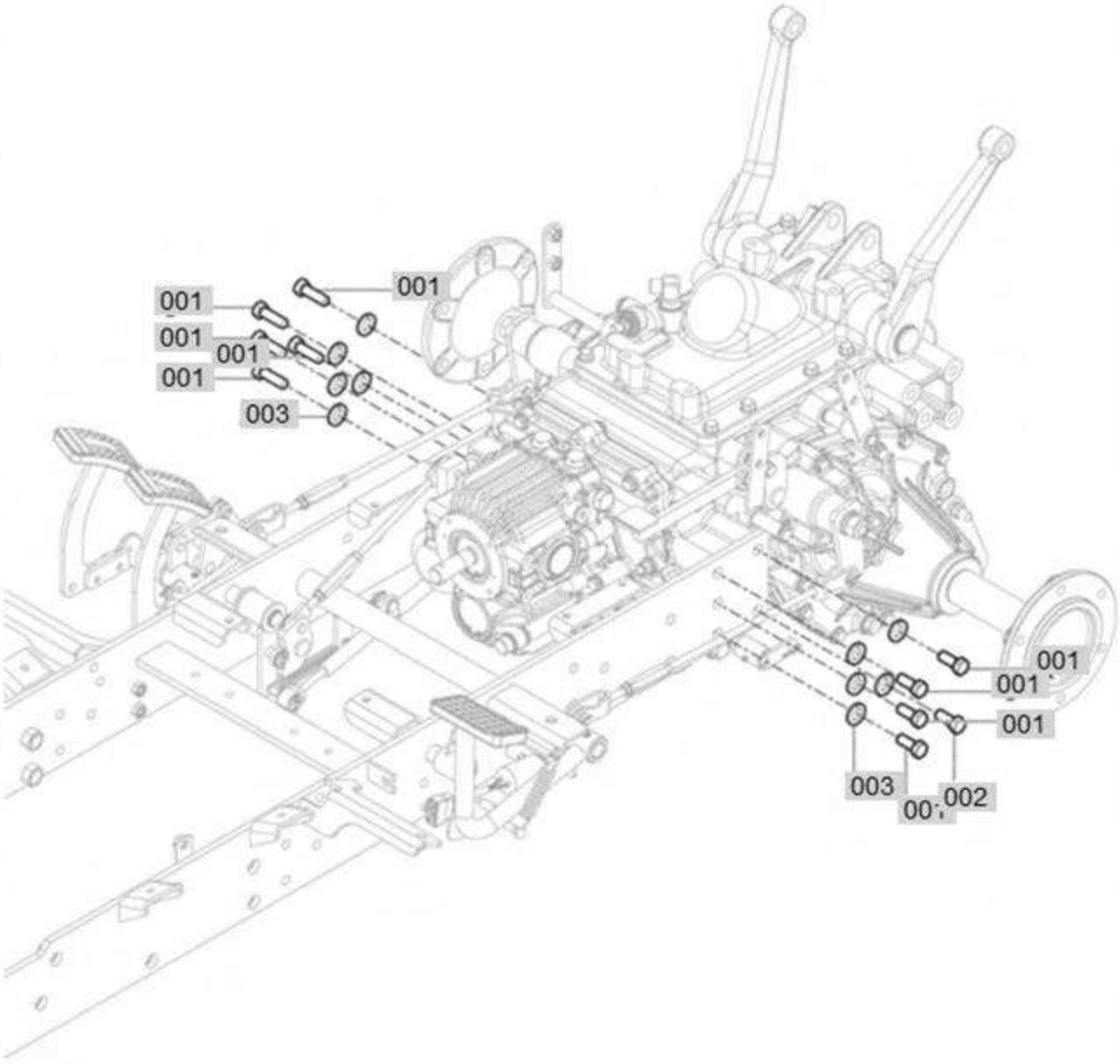

NOTE	

FIG 415 Branson 2505h_EU	TRANSMISSION MOUNTING	Year/Month 2020-09

KeyNo.	Part Number	Part Name	Quantity	Other
001	11104070020	BOLT (M14X30)	9	
002	11104070030	BOLT (M14X25)	1	
003	V4011600140	WASHER, SPRING	10	

FIG 501 2505H	FRONT DRIVE SHAFT	P1	YEAR 2019	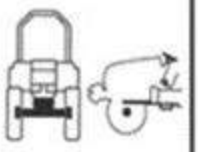

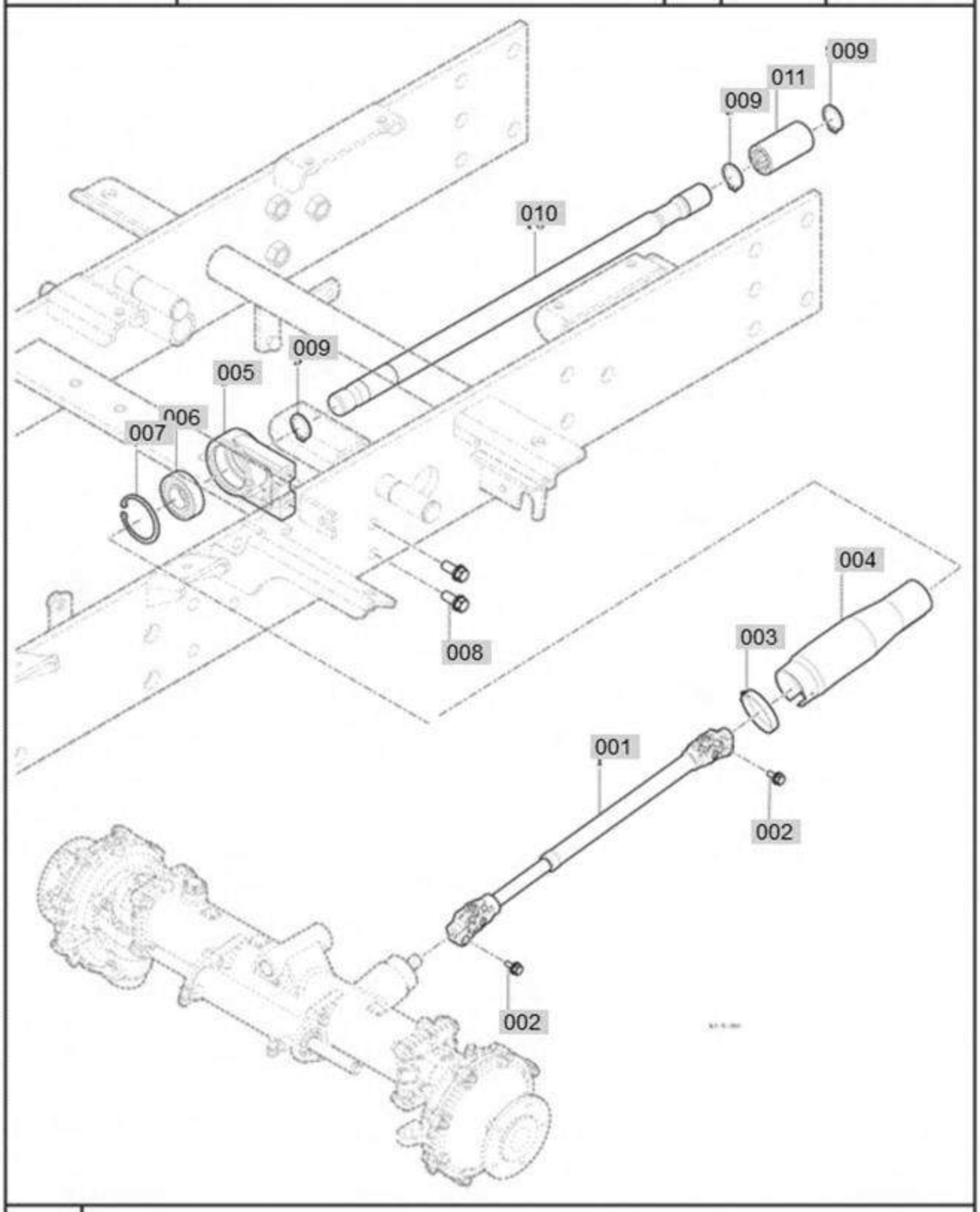

NOTE	

FIG 501 Branson 2505h_EU	FRONT DRIVE SHAFT	Year/Month 2020-09

KeyNo.	Part Number	Part Name	Quantity	Other
001	TA00059637A	SHAFT ASSY , 4WD	1	
002	V2173608035	BOLT(S)	2	
003	14885050150A	CLAMP 75	1	
004	11104200010C	4WD COVER	1	
005	TA00059671A	SUPPORT , 4WD	1	
006	V6001306004	BEARING, BALL	1	
007	V7051400420	CIR CLIP, INTERNAL	1	
008	V2173610025	BOLT(S)	2	
009	V7041400200	CIR CLIP,EXTERNAL	3	
010	11104100010	4WD SHAFT	1	
011	14211340190	COUPLING	1	

FIG 502 2505H	FRONT DIFFERENTIAL GEAR	P1	YEAR 2019	

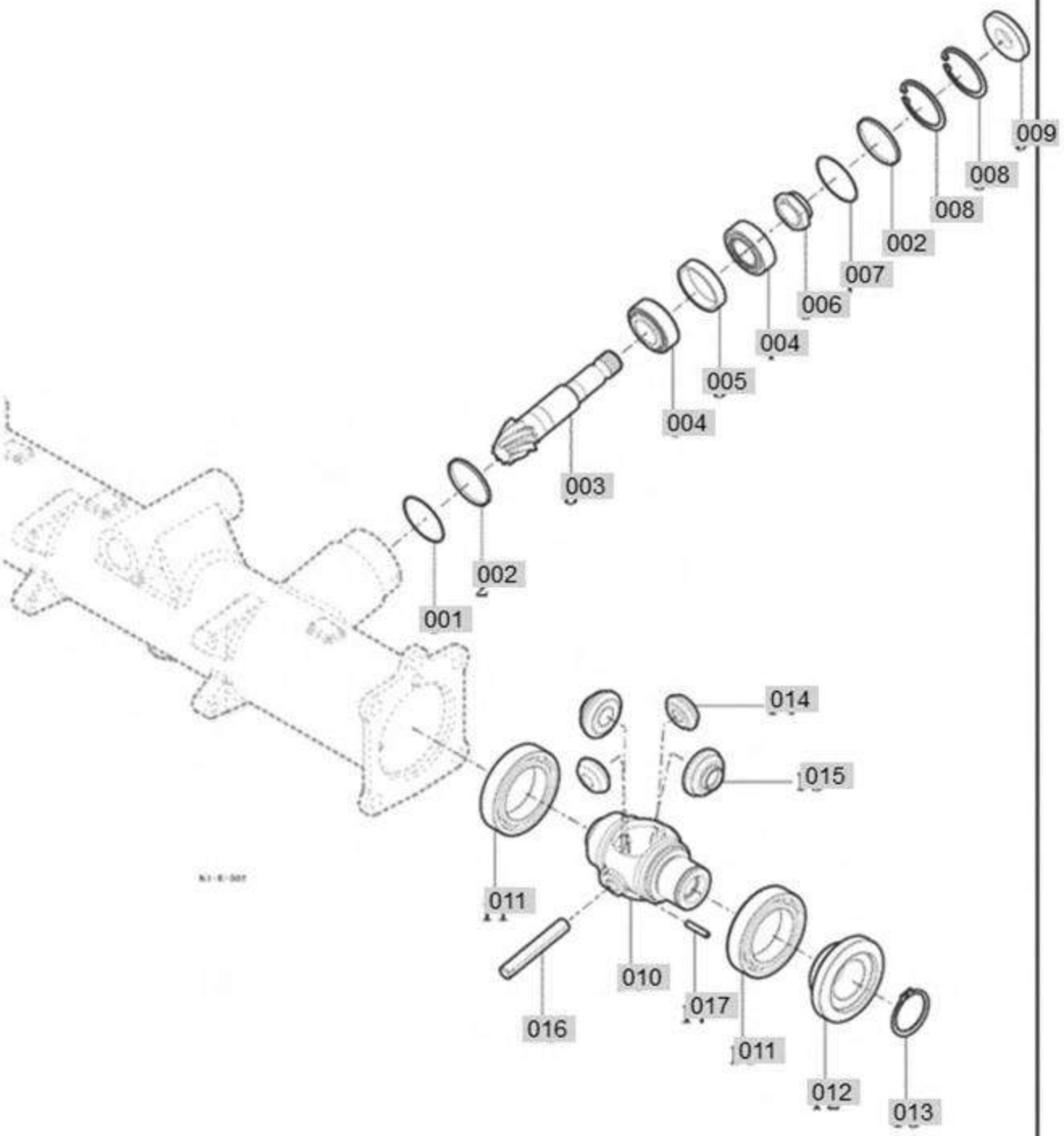

NOTE	

FIG 502 Branson 2505h_EU	FRONT DIFFERENTIAL GEAR	Year/Month 2020-09

KeyNo.	Part Number	Part Name	Quantity	Other
001	13154112160A	SHIM(A)	1	
002	13154112141	SPACER (45X47X3)	2	
003	11104112110A	SPIRAL BEVEL PINION(8)	1	
004	V6321133005	BEARING, TAPER-ROLLER	2	
005	13154112120A	COLLAR	1	
006	13154112131	NUT(M25)	1	
007	13154112170A	SHIM(B)	1	
008	V7051400470	CIR CLIP, INTERNAL	2	
009	V7441204707	SEAL, OIL (D)	1	
010	TA00058098A	FRONT DIFF CASE	1	
011	V6001106010	BEARING, BALL	1	
012	11104112210A	SPIRAL BEVEL GEAR(25)	1	
013	V7041400400	CIR CLIP,EXTERNAL	1	
014	11104112230	PINION , DIFF 11T	2	
015	11104112220	GEAR , DIFF (15)	2	
016	11104112270	PINION , DIFF SHAFT	1	
017	V5801405025	PIN, SPRING	1	

FIG 503 2505H	FRONT AXLE HOUSING	P1	YEAR 2019	

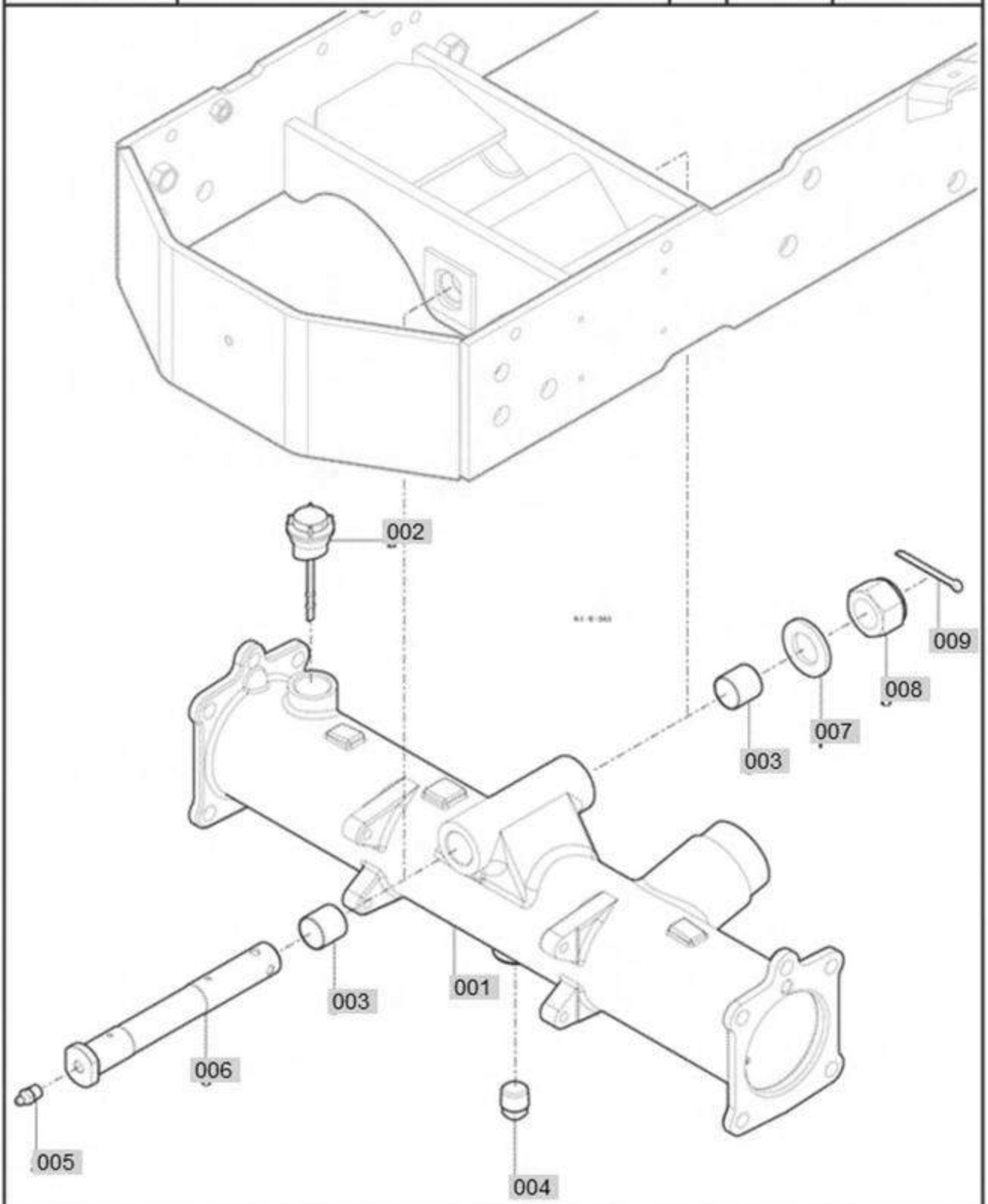

NOTE	

FIG 503 Branson 2505h_EU	FRONT AXLE HOUSING	Year/Month 2020-09

KeyNo.	Part Number	Part Name	Quantity	Other
001	TA00058091A	HOUSING , FRONT AXLE	1	
002	11104125100A	OIL CAP ASSY	1	
003	11104120030	BUSH(24X27X25)	2	
004	V7811600008	PLUG	1	
005	V7611500000	NIPPLE, GREASE (A-PT)	1	
006	11104072111A	PIN	1	
007	V4111600240	WASHER, PLAIN	1	
008	11104072120	NUT ,M24XP2.0	1	
009	V5001950050	PIN	1	

FIG 504 2505H	FRONT GEAR CASE (1)	P1	YEAR 2019	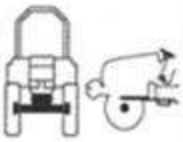

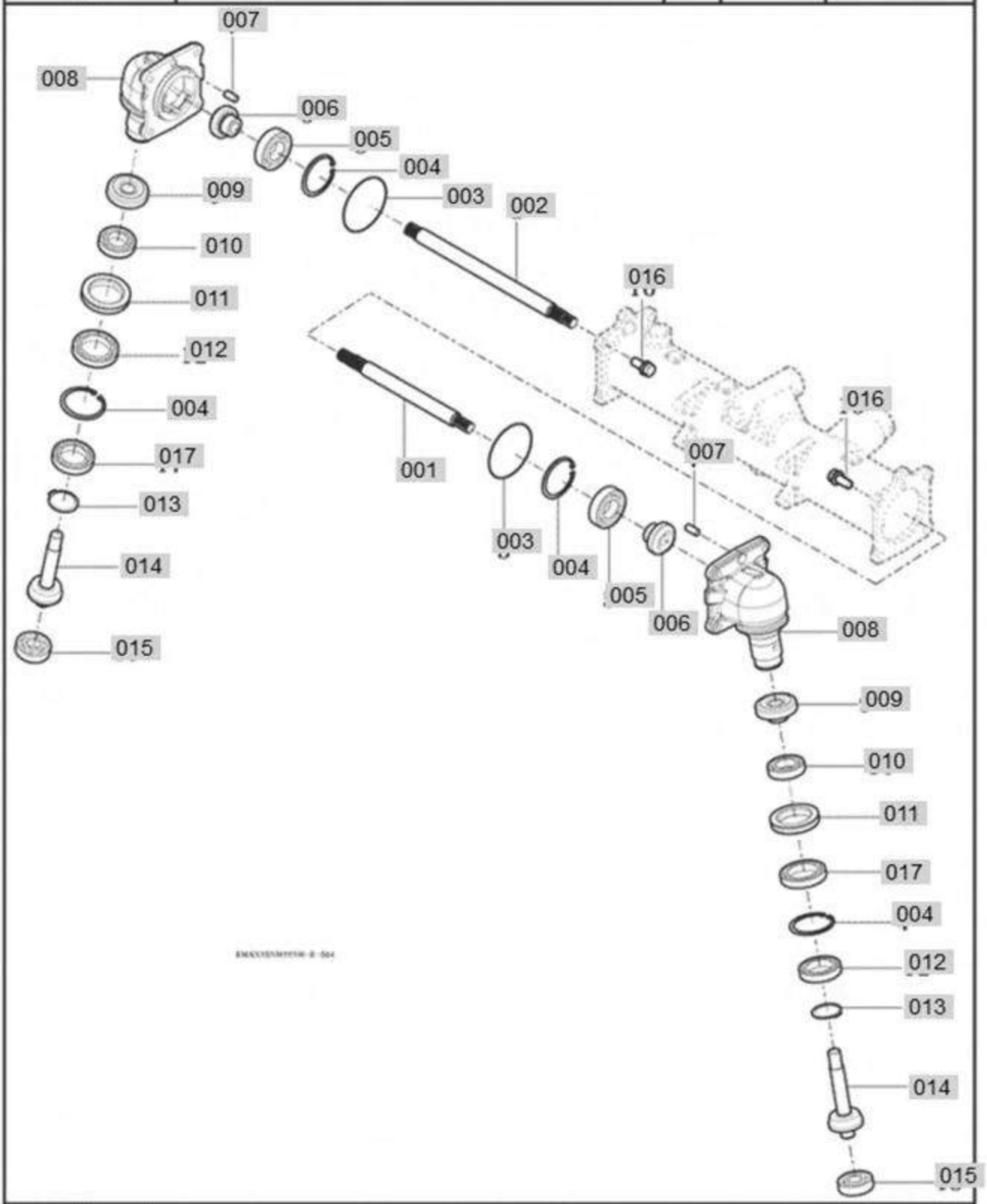

NOTE	

FIG 504 Branson 2505h_EU	FRONT GEAR CASE (1)	Year/Month 2020-09

KeyNo.	Part Number	Part Name	Quantity	Other
001	11104130010A	SHAFT(LH)	1	
002	11104130090A	SHAFT(RH)	1	
003	V7231020085	O RING(P)	2	
004	V7051400620	CIR CLIP, INTERNAL	4	
005	V6001106206	BEARING, BALL	2	
006	11104130020A	BEVEL GEAR (9)	2	
007	V5201010020	PIN, STRAIGHT (A)	2	
008	TA00059674A	CASE , FINAL DRIVE A	2	
009	11104130040	BEVEL GEAR (14)	2	
010	V6001106006	BEARING, BALL	2	
011	11104130151	SEAL , OIL	2	
012	V6001106908	BEARING, BALL	2	
013	V7041400400	CIR CLIP,EXTERNAL	2	
014	11104130060A	BEVEL GEAR (9)	2	
015	V6001106304	BEARING, BALL	2	
016	V2173612030	BOLT(S)	2	
017	V6001106909	BEARING, BALL	2	

FIG 505 2505H	FRONT GEAR CASE (2)	P1	YEAR 2019	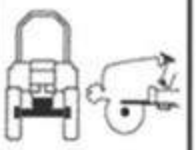

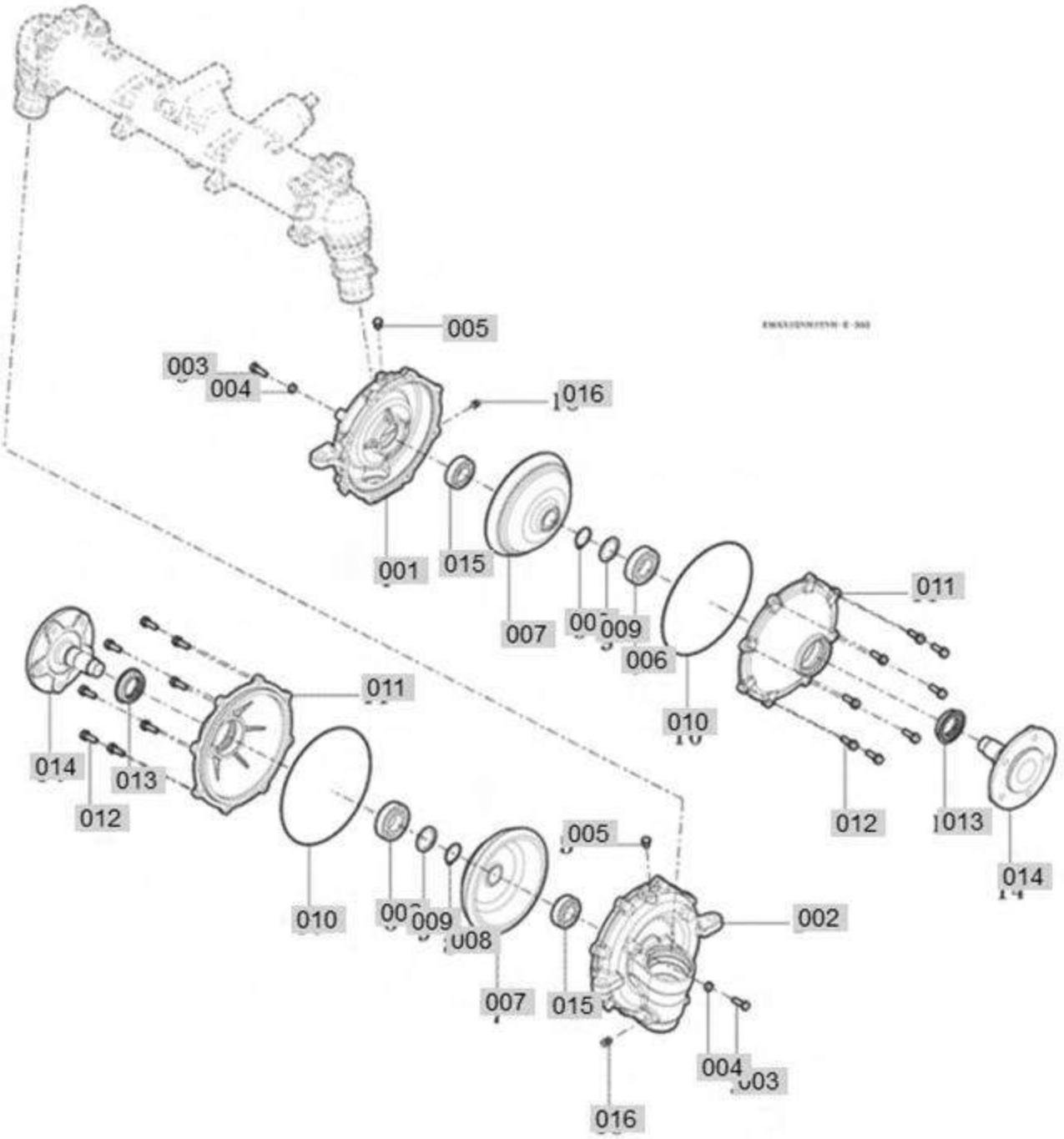

NOTE

FIG 505 Branson 2505h_EU	FRONT GEAR CASE (2)	Year/Month 2020-09

KeyNo.	Part Number	Part Name	Quantity	Other
001	TA00059676A	CASE , LH FINAL DRIVE B	1	
002	TA00058115A	CASE , FINAL DRIVE(B) RH	1	
003	V2014610025	BOLT	2	
004	V3043600080	NUT	2	
005	V7821600002	PLUG	2	
006	V6001106206	BEARING, BALL	2	
007	11104130080A	BEVEL GEAR (40)	2	
008	V7041400300	CIR CLIP,EXTERNAL	2	
009	11104130110A	WASHER (31X42X2)	2	
010	11104130170	ORING(S200)	2	
011	TA00058119A	COVER , WHEEL SHAFT	2	
012	V2173608025	BOLT(S)	16	
013	11104130181	OIL SEAL (AXLE)	2	
014	11104130121B	FRONT WHEEL SHAFT	2	
015	V6041106205	BEARING, BALL (HL1)	2	
016	V7811600004	PLUG	2	

FIG 601 2505H	CYLINDER CASE

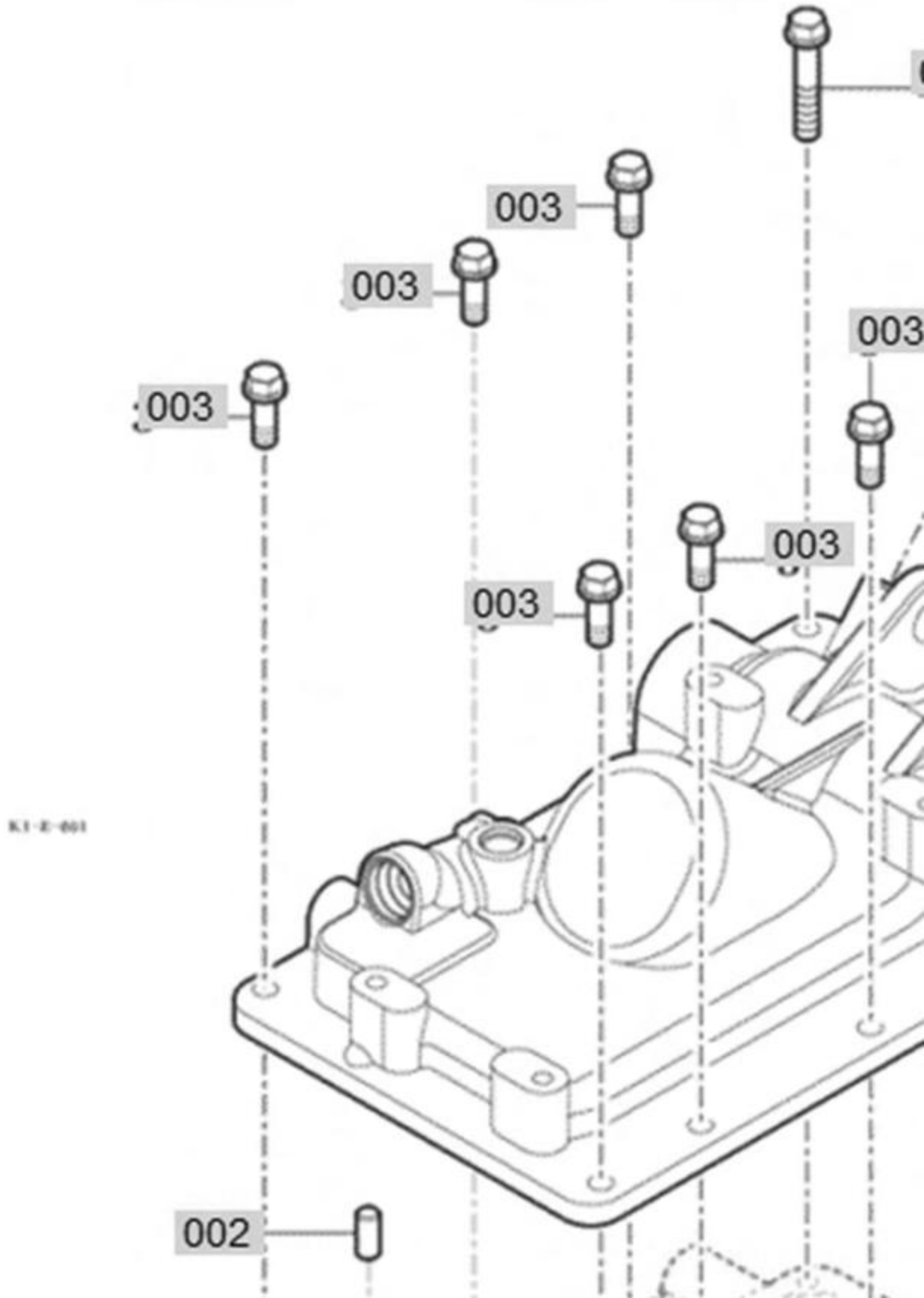

FIG 601 Branson 2505h_EU	CYLINDER CASE	Year/Month 2020-09

KeyNo.	Part Number	Part Name	Quantity	Other
001	TA00059678A	CASE , CYLINDER	1	
002	V5201010018	PIN, STRAIGHT (A)	2	
003	V2173610030	BOLT(S)	8	
004	V2173610055	BOLT(S)	1	
005	V2173610065	BOLT(S)	1	
006	18715110110A	OIL CAP ASSY	1	

FIG 602 2505H	LIFT ARM

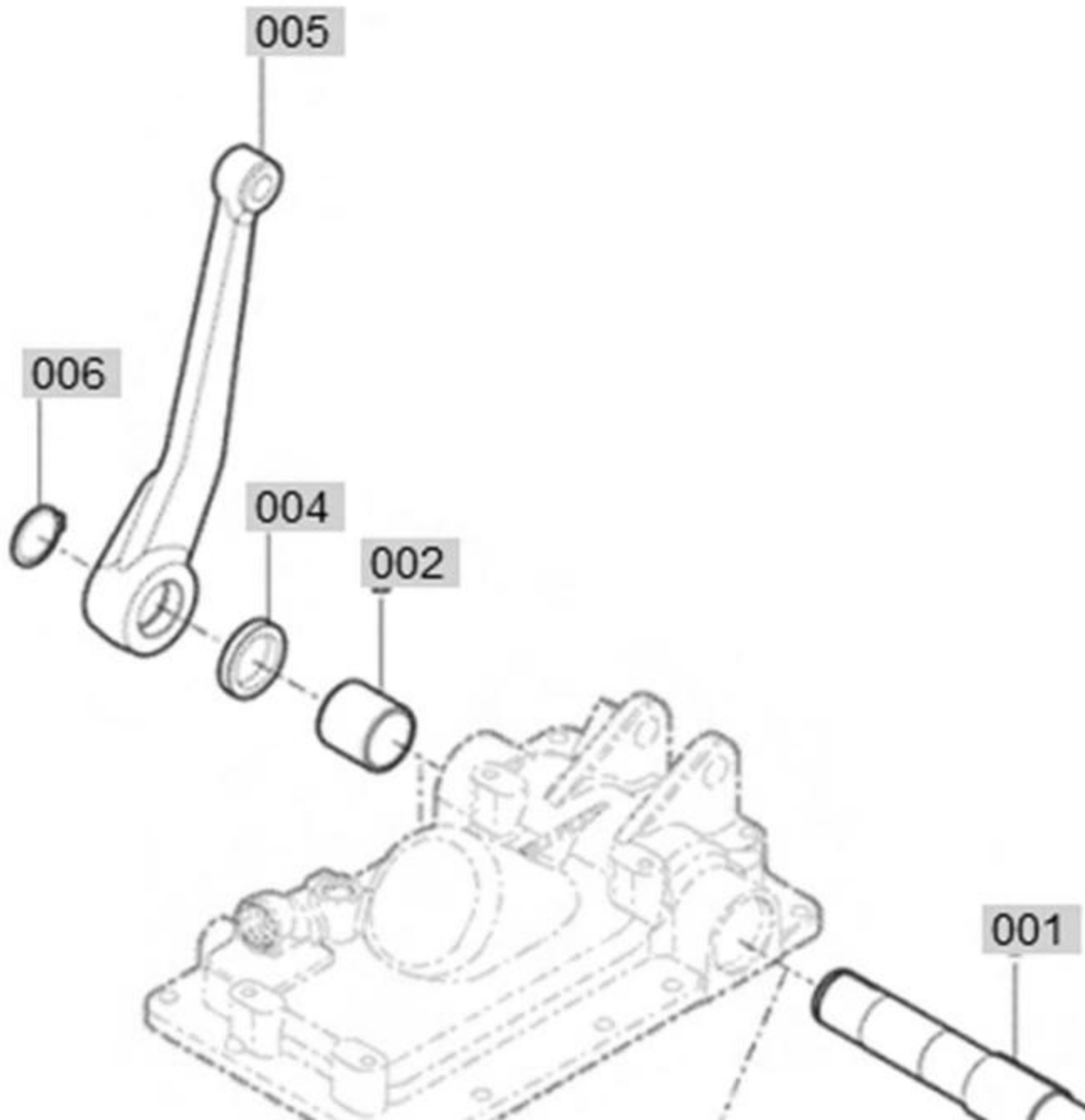

FIG 602 Branson 2505h_EU	LIFT ARM	Year/Month 2020-09

KeyNo.	Part Number	Part Name	Quantity	Other
001	11105020010B	LIFT SHAFT	1	
002	13155010030	BUSH (35X42X40)	1	
003	13155010040	BUSH (40X46X40)	1	
004	V7441354808	SEAL, OIL (D)	2	
005	TA00059675A	ARM , LIFT	2	
006	V7041400350	CIR CLIP,EXTERNAL	2	
007	TA00052789A	CRANK , LIFT	1	
008	V5801406050	PIN, SPRING	1	
009	11105030061B	ROD , PISTON	1	
010	TA00059677A	PISTON , HYD	1	
011	16705050060	RING	1	
012	V7201057070	O RING(P)	1	
013	11105030070	PLATE	1	
014	V2173608016	BOLT(S)	1	

FIG 603 2505H	FLOW CONTROL VALVE

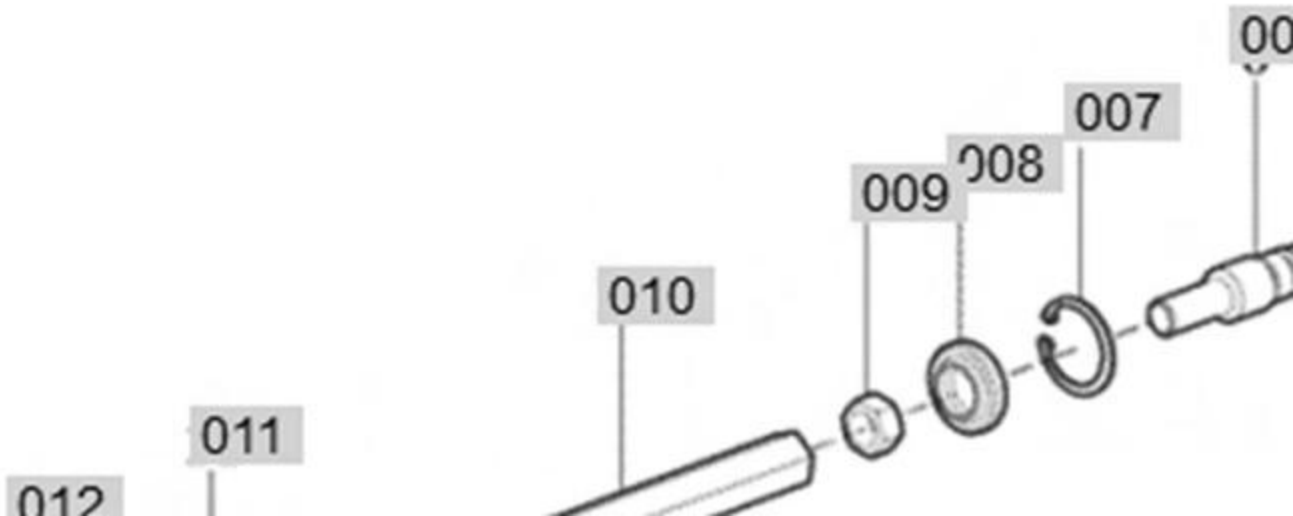

FIG 603 Branson 2505h_EU	FLOW CONTROL VALVE	Year/Month 2020-09

KeyNo.	Part Number	Part Name	Quantity	Other
001	11105030120B	SPRING GUIDE	2	
002	11105030130B	SPRING (15)	1	
003	11105030140	BALL	1	
004	V7201119010	O RING(P)	1	
005	11105030150	STOPPER PLATE	1	
006	11105030110	RETURN VALVE	1	
007	V7051400250	CIR CLIP, INTERNAL	1	
008	11105030160A	DUST SEAL (15)	1	
009	V3042600100	NUT	1	
010	11105030170	SLOWRETURN SHAFT	1	
011	15605070070D	GRIP(SLOW/RETURN)	1	
012	V4011600060	WASHER, SPRING	1	
013	V1112606040	BOLT(+)	1	

FIG 604 2505H	MAIN CONTROL VALVE

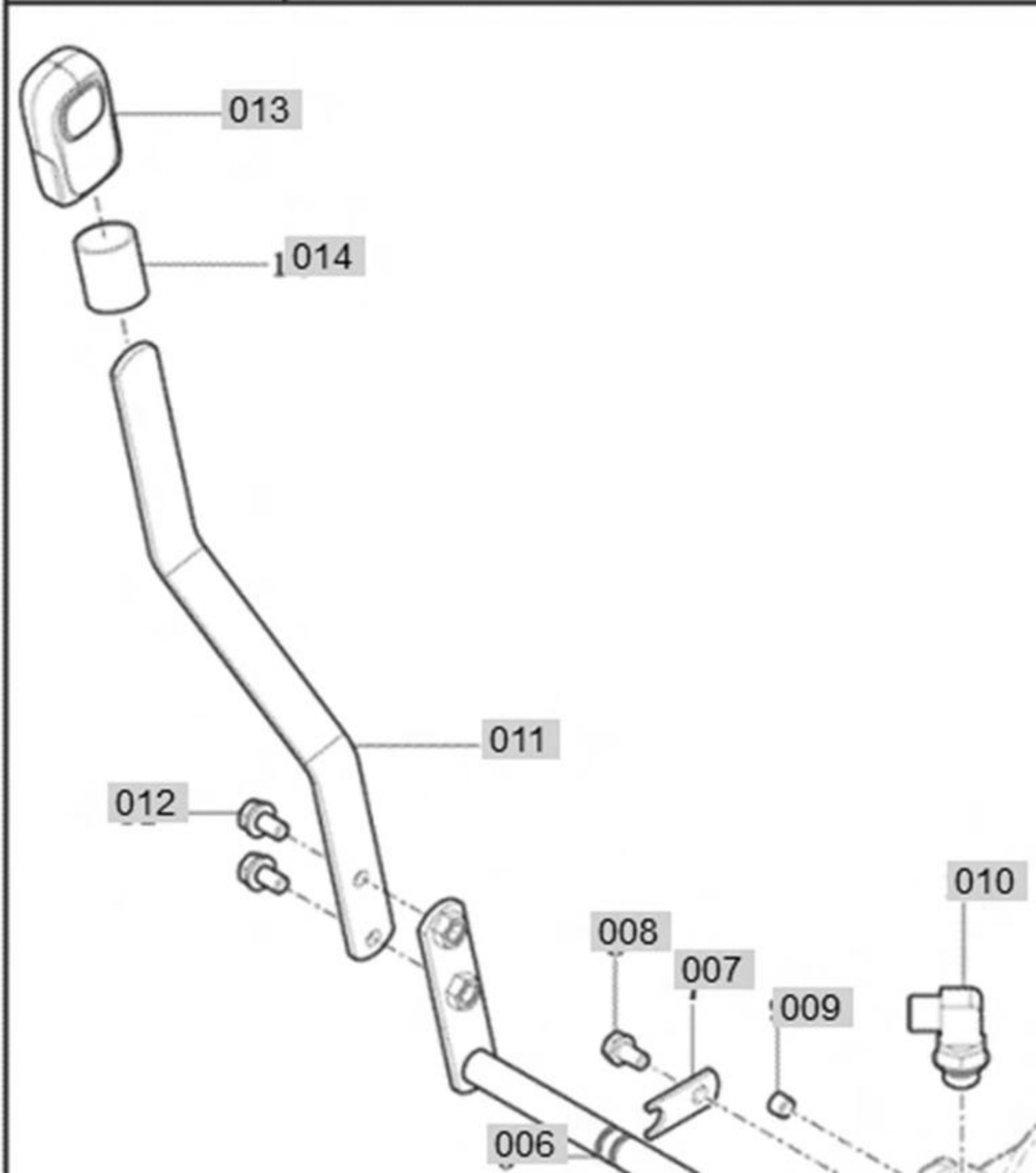

FIG 604 Branson 2505h_EU	MAIN CONTROL VALVE	Year/Month 2020-09

KeyNo.	Part Number	Part Name	Quantity	Other
001	11105051000	CONTROL VAVLE	1	
002	V2173608025	BOLT(S)	2	
003	TA00052833A	FORK , VALVE	1	
004	V7081400120	CIR CLIP	1	
005	V7201019012	O RING(P)	1	
006	11105052102A	POSITION LEVER COMP	1	
007	16702230371	PLATE	1	
008	V2173608016	BOLT(S)	1	
009	V7801000002	PLUG	1	
010	80105030320	ELBOW (PF3/8, PF3/8)	1	
011	TA00059679A	LEVER , POSITION	1	
012	V2183608020	BOLT(SP)	2	
013	11106073020	GRIP , POSITION	1	
014	11103160020B	TUBE (60)	1	

FIG 605 2505H	HYDRAULIC SUB

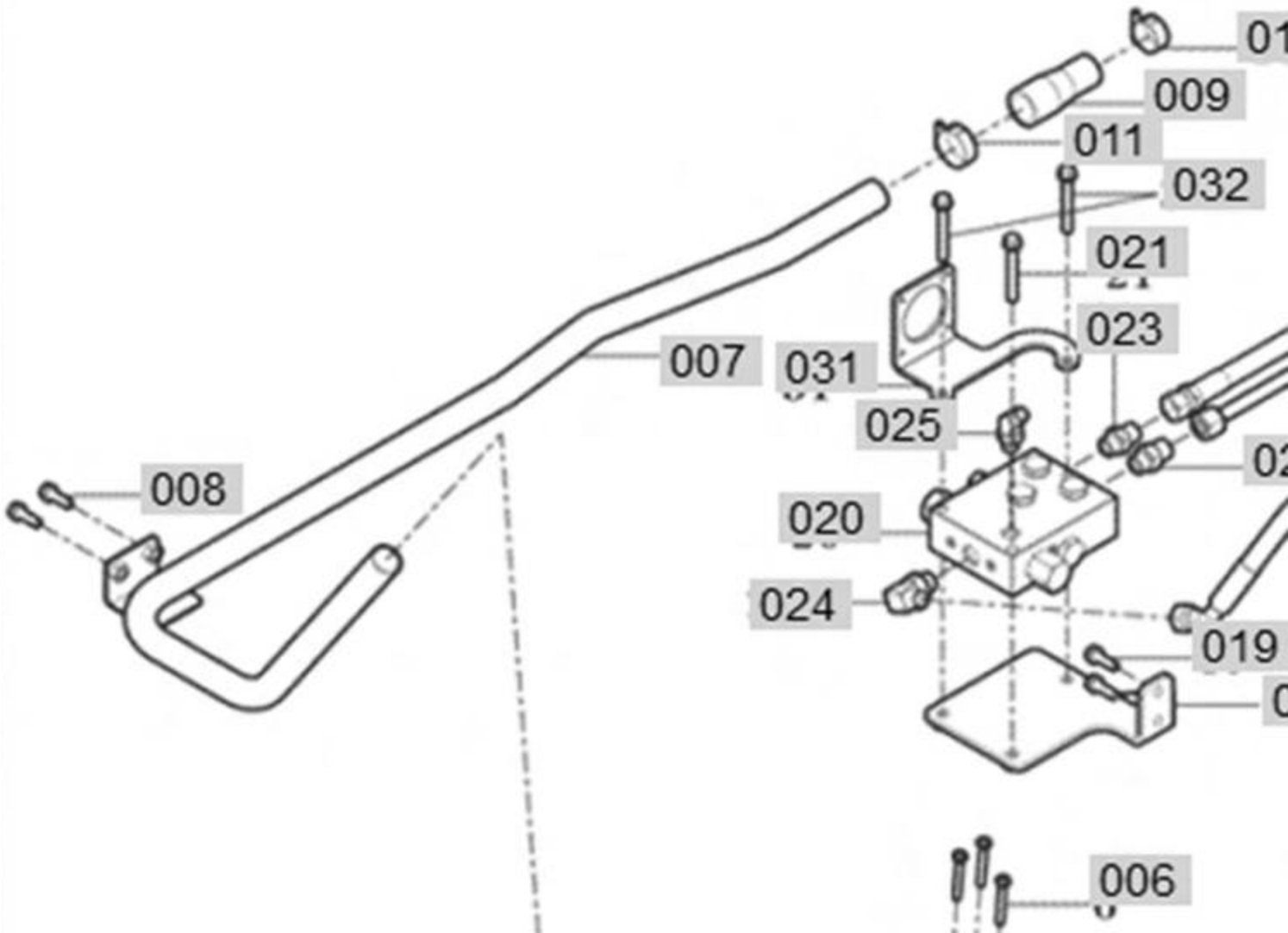

FIG 605 Branson 2505h_EU	HYDRAULIC SUB	Year/Month 2020-09

KeyNo.	Part Number	Part Name	Quantity	Other
001	11115182200	GEAR PUMP ASSY(11CC)	1	
002	V7231020055	O RING(P)	1	
003	TA00058050A	PLANGE COMP	1	
004	V7201024020	O RING(P)	1	
005	V4011600060	WASHER, SPRING	3	
006	V2053606045	BOLT	3	
007	TA00059680A	PIPE COMP, SUCTION	1	
008	V2173608025	BOLT(S)	2	
009	11115150010	HOSE	1	
010	18027090320	BAND CLAMP 32 EMBO TYPE	1	
011	18027090400	BAND CLAMP 40 EMBO TYPE	1	
012	13155150021	HOSE	1	
013	18027090320	BAND CLAMP 32 EMBO TYPE	1	
014	18027090400	BAND CLAMP 40 EMBO TYPE	1	
015	TA00058053A	PLANGE COMP	1	
016	V7201024020	O RING(P)	1	
017	V2113606030	BOLT(S)	4	
018	TA00059681A	BRACKET COMP , DIBIDER	1	
019	V2173608025	BOLT(S)	2	
020	11115183100	VALVE ASSY(2505H)	1	
021	V2173608060	BOLT(S)	1	
022	16995304000	UNION (ORING)	1	
023	16994080072B	UNION (SHORT)	1	
024	36313530021A	ADAPTER (H)	1	
025	34523600070	ADAPTER (PF1/4,45)	1	
026	TA00059682A	PIPE COMP , TANK	1	
027	11105104100A	HYD HOSE ASSY(900)	1	
028	11115103800A	HYD HOSE ASSY (MAIN/830)	1	
029	V2513408020	STUD, BOLT	2	
030	V3802600080	NUT	2	
031	11126230510ED		1	
032	V2173608065		2	

FIG 606 2505H	HITCH & 3-POINT LINKAGE

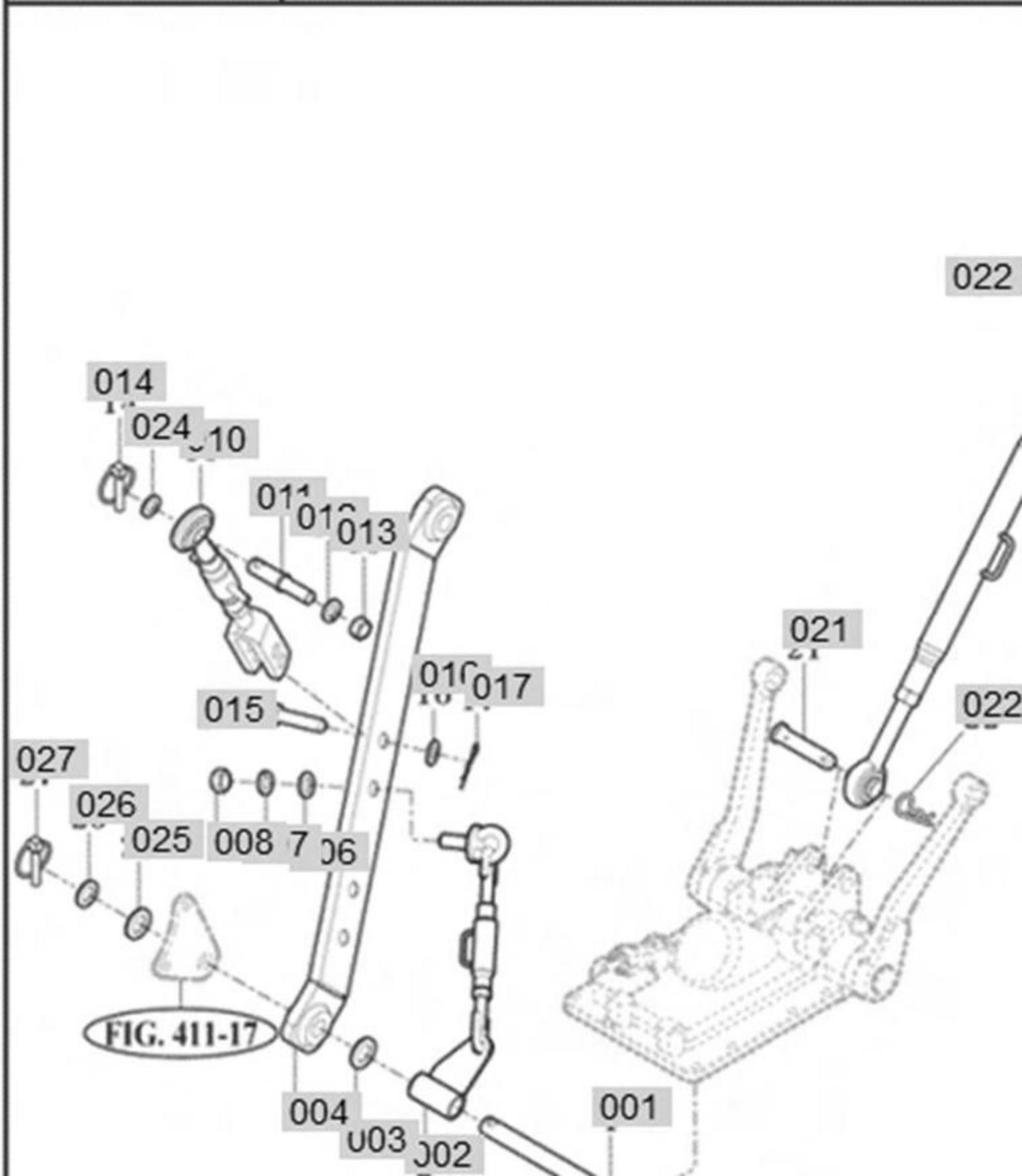

FIG 606 Branson 2505h_EU	HITCH & 3-POINT LINKAGE	Year/Month 2020-09

KeyNo.	Part Number	Part Name	Quantity	Other
001	11105200011A	LOWER LINK PIN	1	
002	11105202500B	CHECK CHAIN ASSY	2	
003	V4111600220	WASHER, PLAIN	2	
004	11105202200GB		2	
006	V4111600160	WASHER, PLAIN	2	
007	V4011600160	WASHER, SPRING	2	
008	V3013600160	NUT	2	
009	11105202400A	LFIT ROD(LH) COMP	1	
010	11105203400A	LIFT ROD(RH) COMP	1	
011	11105200020	PIN(19)	2	
012	V4011600160	WASHER, SPRING	2	
013	V3043600160	NUT	2	
014	14215020020	LINK PIN	2	
015	79636130050	PIN(16X60)	2	
016	V4111600160	WASHER, PLAIN	2	
017	13059310030	PIN(D=2.3)	2	
020	11105206100A	TOP COMP	1	
021	15645220011B	PIN(19X86)	1	
022	14445140051A	PIN(19)	2	
023	15645220020B	PIN(19X95)	1	
024	V4111600200	WASHER, PLAIN	2	
025	11105200050	SPACER	2	
026	V4111600220	WASHER, PLAIN	2	
027	14215020020	LINK PIN	2	

FIG 607 2505H	HITCH & COVER

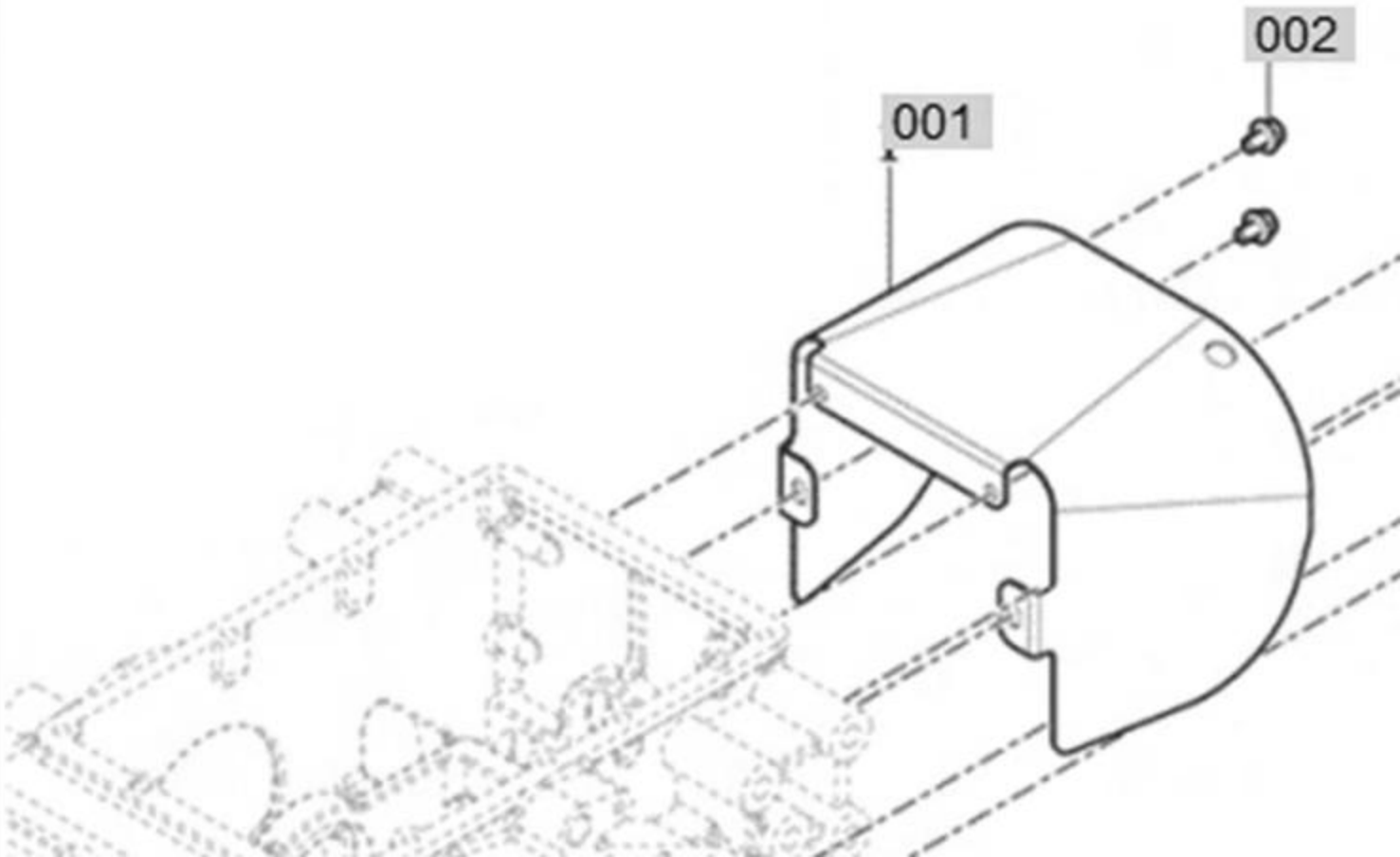

FIG 607 Branson 2505h_EU	HITCH & COVER	Year/Month 2020-09

KeyNo.	Part Number	Part Name	Quantity	Other
001	TA00059683A	SHIELD, PTO	1	
002	V2183608016	BOLT(SP)	4	
003	11125212100GB		1	
004	V2173610025	BOLT(S)	2	
005	V2173612030	BOLT(S)	4	
007	11125210020		1	
008	14445140051A	PIN(19)	1	

FIG 701 2505H	BONNET

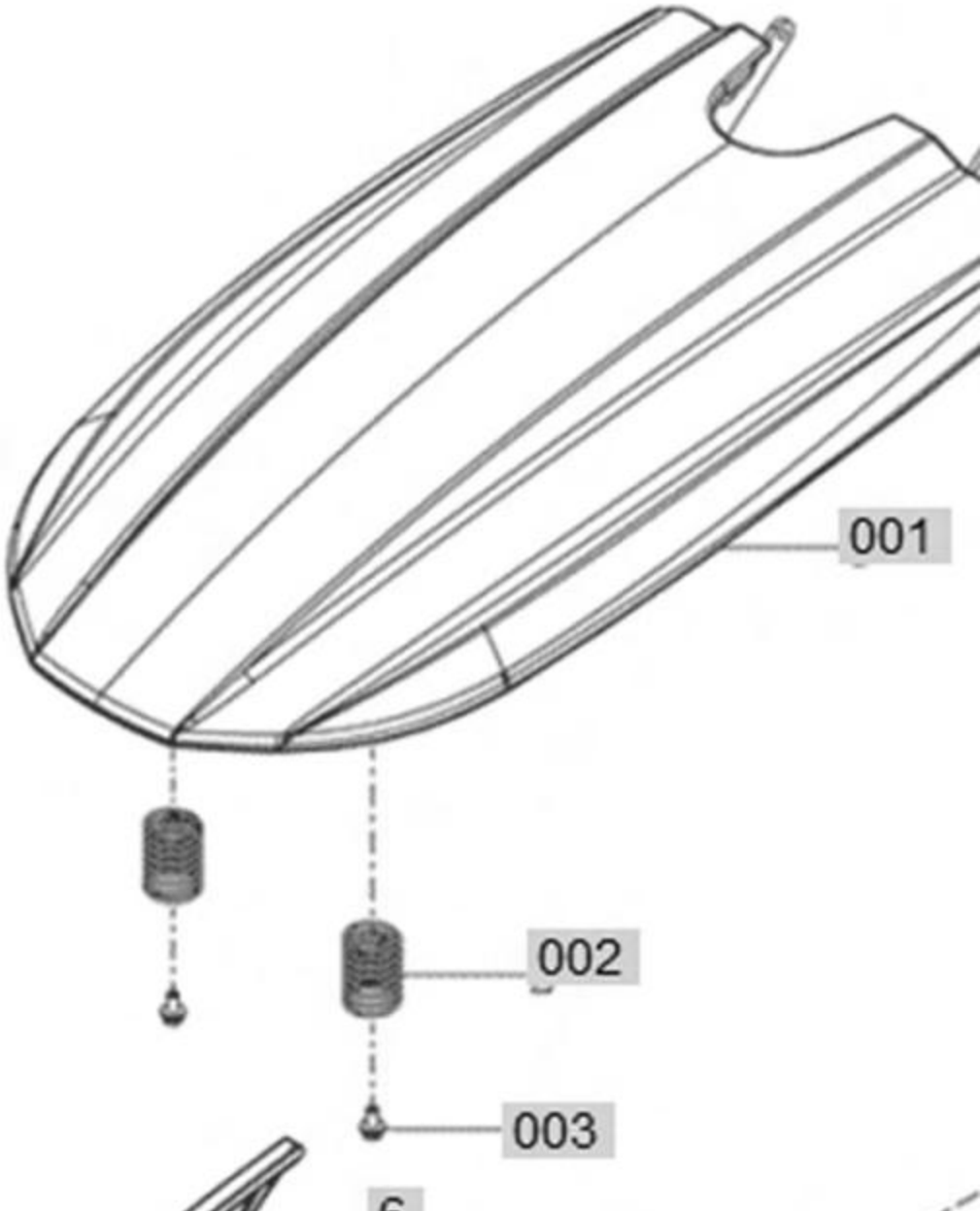

FIG 701.1 Branson 2505h_EU	BONNET	Year/Month 2020-09

KeyNo.	Part Number	Part Name	Quantity	Other
001	TA00059686A	HOOD COMP	1	
002	14726010031	HOOD SPRING	2	
003	V2183608020	BOLT(SP)	2	
4	TA00059684A	GRILLE COMP, FRONT	1	
5	TA00059687A	GRILLE COMP, LH/RR	1	
6	TA00059685A	GRILLE COMP, RH/RR	1	
7	TA00059688A	GRILLE , LOW	1	
8	14446010150	NET WASHET (6X14X3)	5	
9	V3501600060	NUT, SPRING	5	
10	11719010010	EMBLEM(B)	1	
11	11719010030	NUT , SPEED(5)	2	
13	11116213700A	BRACKET COMP, GRILL	1	GB
14	V3802600060	NUT	3	
15	37371720090	CLAMP(D)	1	
16	11116213800A	BRACKET COMP , L/B	1	GB
17	11116213900A	BRACKER COMP , R/B	1	GB
18	V2123606016	BOLT(SP)	6	
19	19027210060	NUT (M6)	6	
20	36108010080A	SPRING (HC016)	6	
21	11116213500	HEADLAMP ASSY, L	1	
22	11116213600	HEADLAMP ASSY, R	1	
23	21575070110	BOLT	2	
24	11719010020	EMBLEM(B) COVER	1	
25	V2123606012	BOLT , HEX /SP	2	
26	16706312920	INSULATOR,SEAT PANEL	2	

FIG 701.2 Branson 2505h_EU	BONNET	Year/Month 2020-09

FIG 701 2505H	BONNET	P2	YEAR 2019	

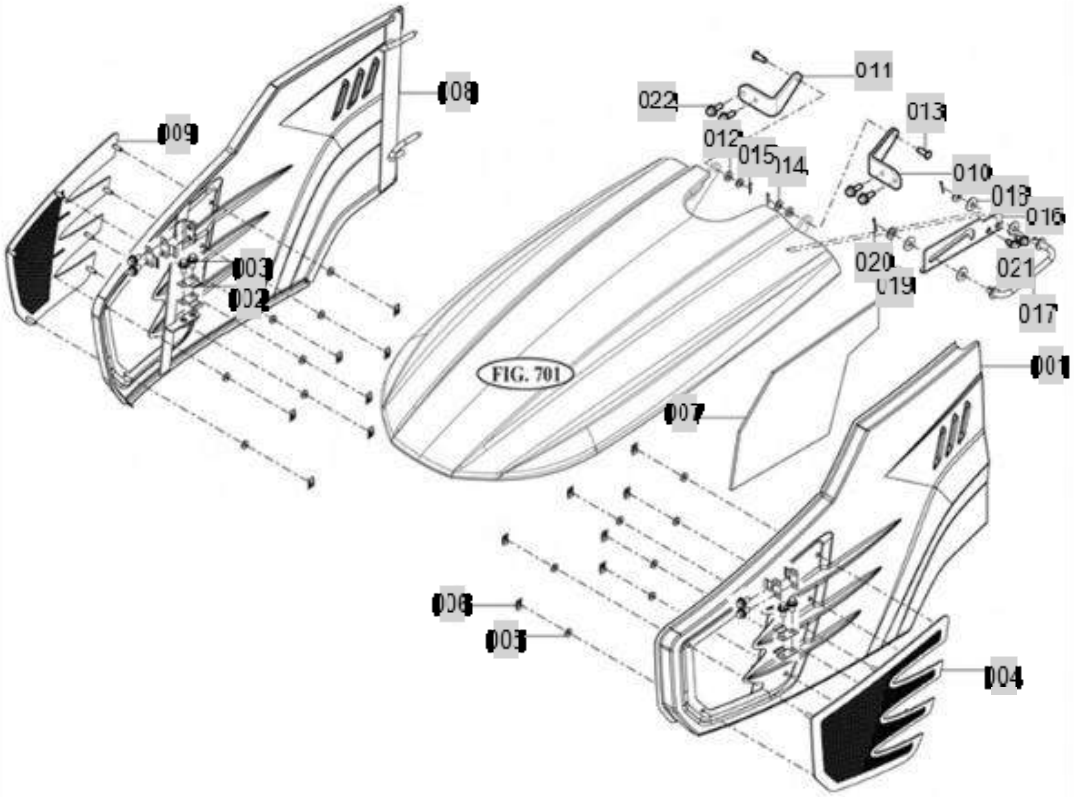

NOTE	

FIG 701.2 Branson 2505h_EU	BONNET	Year/Month 2020-09

KeyNo.	Part Number	Part Name	Quantity	Other
001	TA00059692A	PANEL COMP , SIDE/LH	1	
002	15606040227F	SPRING	8	
003	V2183608020	BOLT(SP)	8	
004	TA00059693A	GRILLE , LH/SIDE	1	
005	14446010150	NET WASHET (6X14X3)	14	
006	V3501600060	NUT, SPRING	14	
007	11116214300	INSULATOR, SIDE(B)	1	
008	TA00059694A	PANEL COMP , SIDE/RH	1	
009	TA00059695A	GRILLE , RH/SIDE	1	
010	TA00059696A	PLATE , LH/HINGE	1	
011	TA00059700A	PLATE , RH/HINGE	1	
012	11205020030	WASHER (8X16X4)	2	
013	14322420010	PIN	2	
014	V4111600080	WASHER, PLAIN	2	
015	V5001925015	PIN	2	
016	11106017600B	GUIDE COMP, STAND	1	
017	11106017700A	STAND COMP, BONNET	1	
018	11206313020	WASHER (10X25X1)	4	
019	V4111600100	WASHER, PLAIN	2	
020	V5001925020	PIN	2	
021	V2183608020	BOLT(SP)	2	
022	V2183608025	BOLT(SP)	4	

FIG 702	FLOOR
2505H	

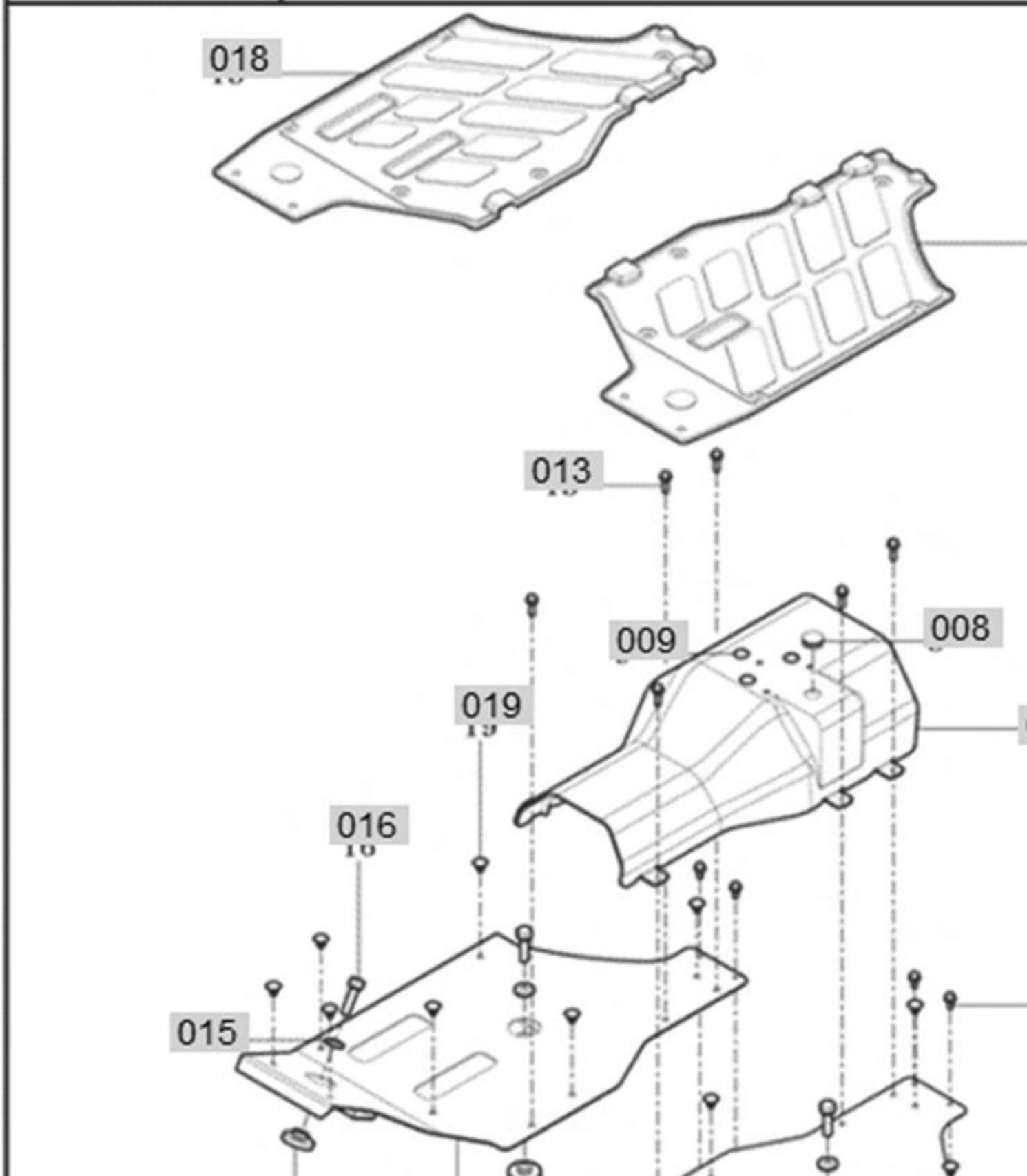

FIG 702 Branson 2505h_EU	FLOOR	Year/Month 2020-09

KeyNo.	Part Number	Part Name	Quantity	Other
001	TA00059699A	PANEL COMP , SEAT FLOOR	1	
003	V2193606016	BOLT(SPL)	2	
004	11106401200A	SEAT SUPPORT COMP, RR	1	
006	V2173610020	BOLT(S)	2	
007	TA00059697A	PANEL , CTR/FLOOR	1	
008	14326510210	CAP(20)	1	
009	19029010070A	LABLE(SEAL)	3	
010	TA00059698A	PANEL COMP , LH/FLOOR	1	
011	TA00059701A	PANEL COMP , RH/FLOOR	1	
012	V2193606016	BOLT(SPL)	4	
013	V2123606025	BOLT(SP)	6	
014	11106252120	RUBBER, MOUNTING	4	
015	13377210020	WASHER (11X24X3)	4	
016	V2173610035	BOLT(S)	4	
017	11106412110A	MAT, LH(2505H)	1	
018	11106412120A	MAT, RH(2505H)	1	
019	17686040020	RIVET SET	14	
020	TA00059703A	BRACKET COMP , PTO SENSOR	1	
021	V2193606020	BOLT(SPL)	4	
022	11106645000	POSITION SWITCH ASSY	1	
023	37371720090	CLAMP(D)	2	

FIG 703	SEAT
2505H	

FIG 703 Branson 2505h_EU	SEAT	Year/Month 2020-09

KeyNo.	Part Number	Part Name	Quantity	Other
001	11126111000		1	
00101	11126111050	SWITCH ASSY , SUSPENSION SEAT (2505H)	1	
002	V2173608025	BOLT(S)	4	
003	V4011600100	WASHER, SPRING	4	
004	V3043600100	NUT	4	

FIG 704 Branson 2505h_EU	ROPS	Year/Month 2020-09

FIG 704 2505H	ROPS	P1	YEAR 2019	

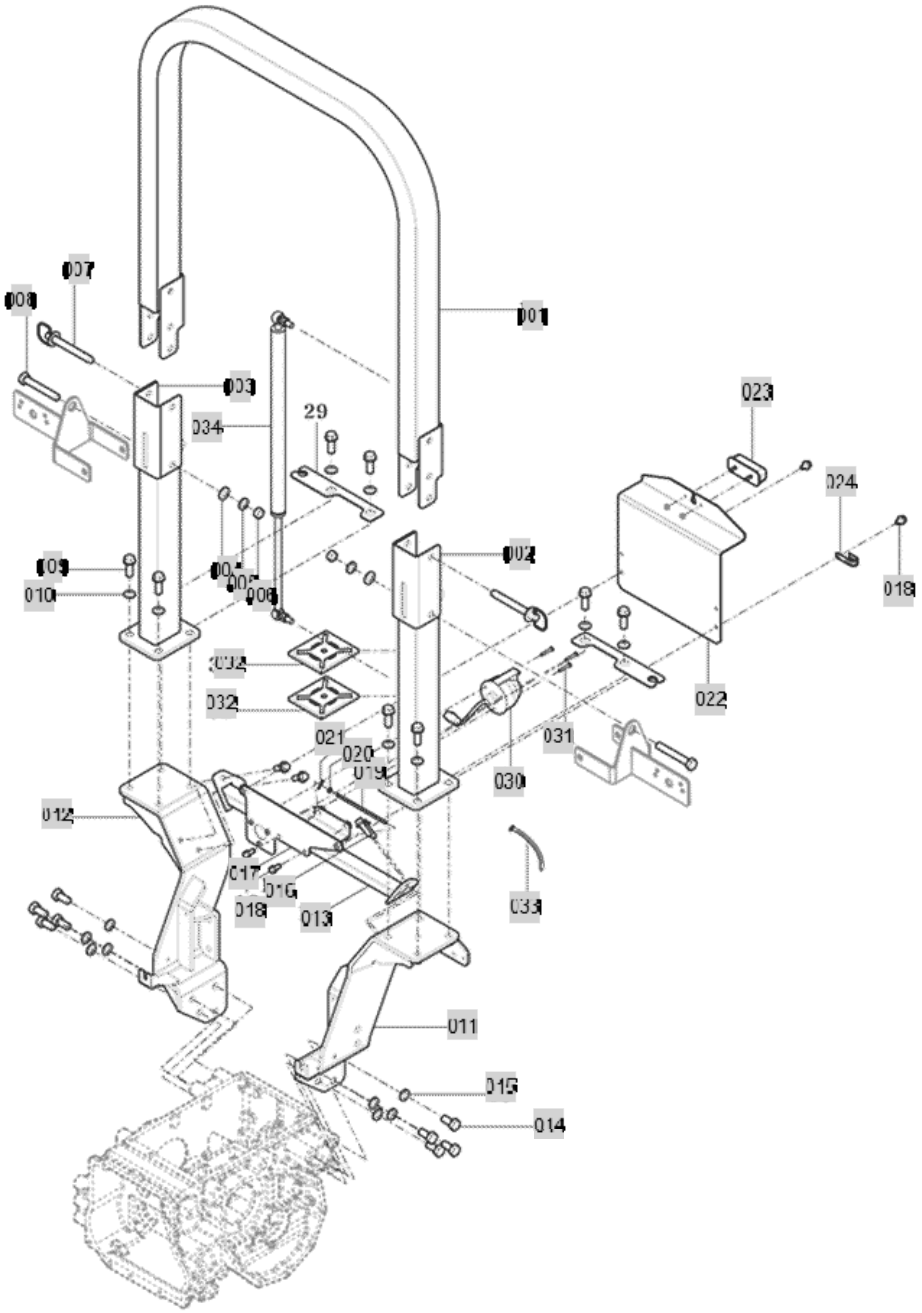

NOTE

FIG 704 Branson 2505h_EU	ROPS	Year/Month 2020-09

KeyNo.	Part Number	Part Name	Quantity	Other
001	11147024100GB		1	GB
002	TA00059704A	FRAME COMP , LOW	1	GB
003	11147022100GB		1	GB
004	V4111600140	WASHER, PLAIN	2	
005	V4011600140	WASHER, SPRING	2	
006	V3043600140	NUT	2	
007	11107027500B	PIN ASSY	2	
008	V2004614095	BOLT	2	
009	V2174612040	BOLT(S)	8	
010	V4111600120	WASHER, PLAIN	8	
011	TA00059702A	FRAME COMP , LH/SPRT	1	GB
012	TA00059706A	FRAME COMP , RH/SPRT	1	GB
013	TA00059707A	FRAME COMP , CTR/SPRT	1	GB
014	V2034614030	BOLT	8	
015	V4011600140	WASHER, SPRING	8	
016	V2183610030	BOLT(SP)	4	
017	11127015500		1	GB
018	V2183608016	BOLT(SP)	4	
019	16705251100A	HOOK	1	
020	V4111600050	WASHER, PLAIN	1	
021	V5001920015	PIN	1	
022	13607010012		1	GB
023	14887024000		1	
024	14256210040A	HARNESS CLAMP (9)	1	
030	13267028202		1	
031	26557-050302	SCREW , C/R PAN	3	
032	14536680010		2	
033	13764020030A	CABLE TIE , 140	2	
034	11147022200		1	

FIG 705	LEVER COVER & FENDER
2505H	

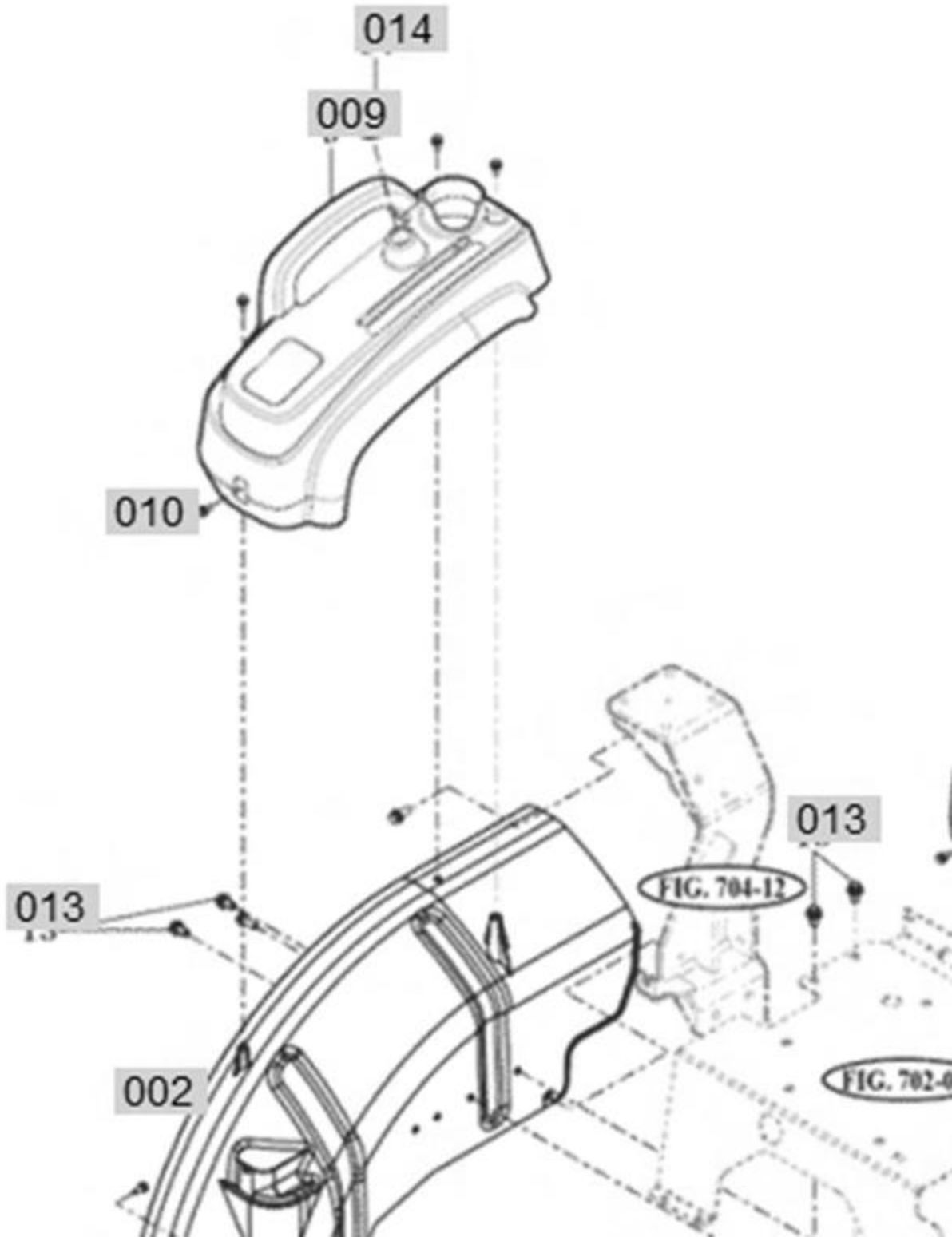

FIG 705 Branson 2505h_EU	LEVER COVER & FENDER	Year/Month 2020-09

KeyNo.	Part Number	Part Name	Quantity	Other
001	TA00059712A	FENDER COMP , LH	1	
002	TA00059713A	FENDER COMP , RH	1	
003	V2183608020	BOLT(SP)	4	
007	V2193606016	BOLT(SPL)	2	
008	TA00059642A	COVER , LH/LEVER	1	
009	11106082121DG		1	
010	V2123806020	BOLT(SP)	8	
011	TA00059714A	FENDER BRACKET COMP , LH	1	
012	TA00059711A	FENDER BRACKET COMP , RH	1	
013	V2183608020	BOLT(SP)	8	
014	11616510210A	CAP , RUBBER(25)	1	

FIG 706	LAMP
2505H	

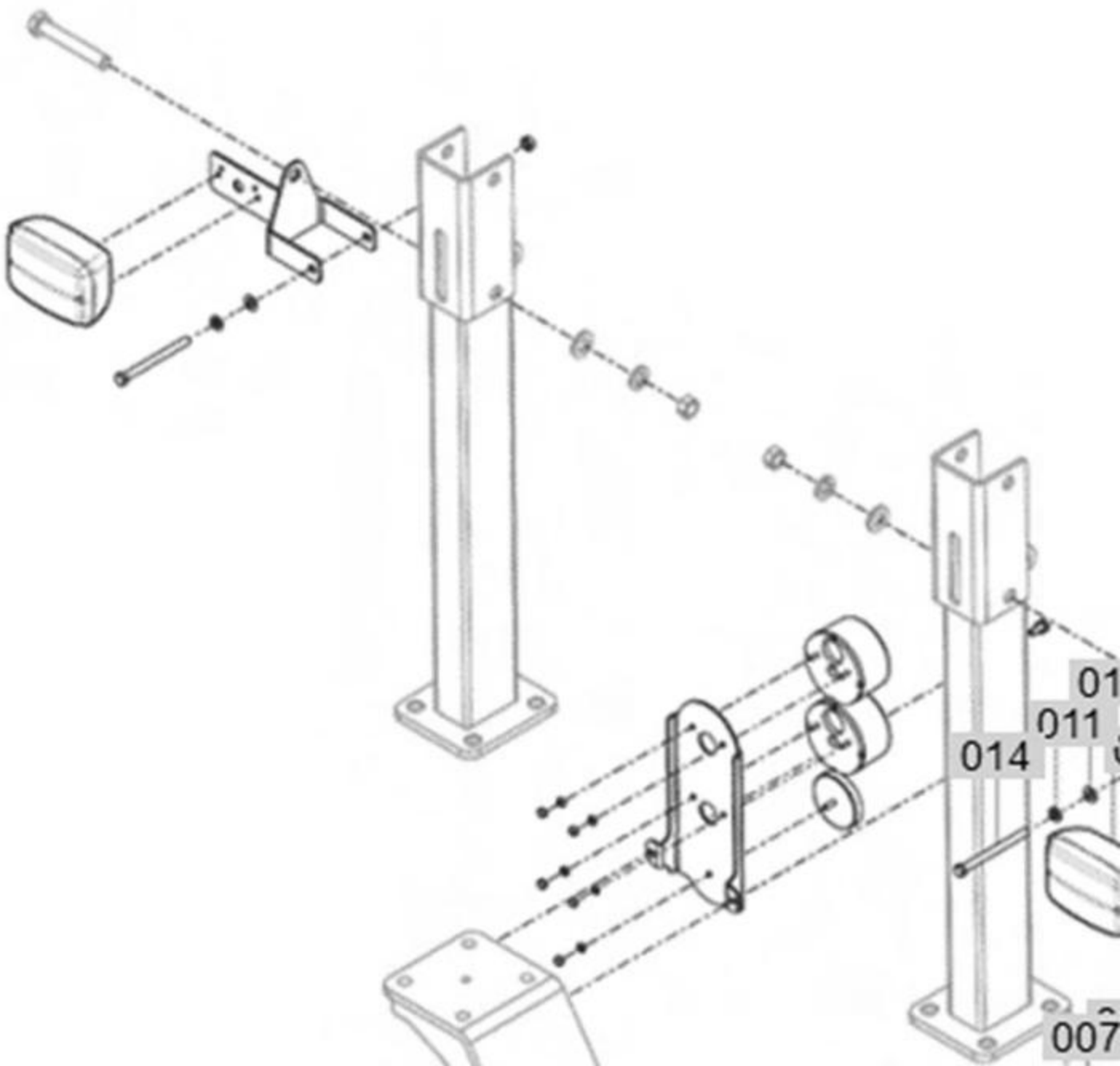

FIG 706 Branson 2505h_EU	LAMP	Year/Month 2020-09

KeyNo.	Part Number	Part Name	Quantity	Other
001	13606571000		2	
002	11106563002	STOP LAMP ASS`Y	2	
003	11126563000		2	
004	11126564001GB		2	
006	V4011600050	WASHER, SPRING	10	
007	V3002600050	NUT	10	
008	13606562000		2	
009	11126562301GB		2	
011	V4011600080	WASHER, SPRING	2	
012	V3043600080	NUT	2	
013	V2123606016	BOLT(SP)	4	
014	V2013608095		2	
015	V4111600080	WASHER, PLAIN	2	

FIG 801	BATTERY MOUNTING
2505H	

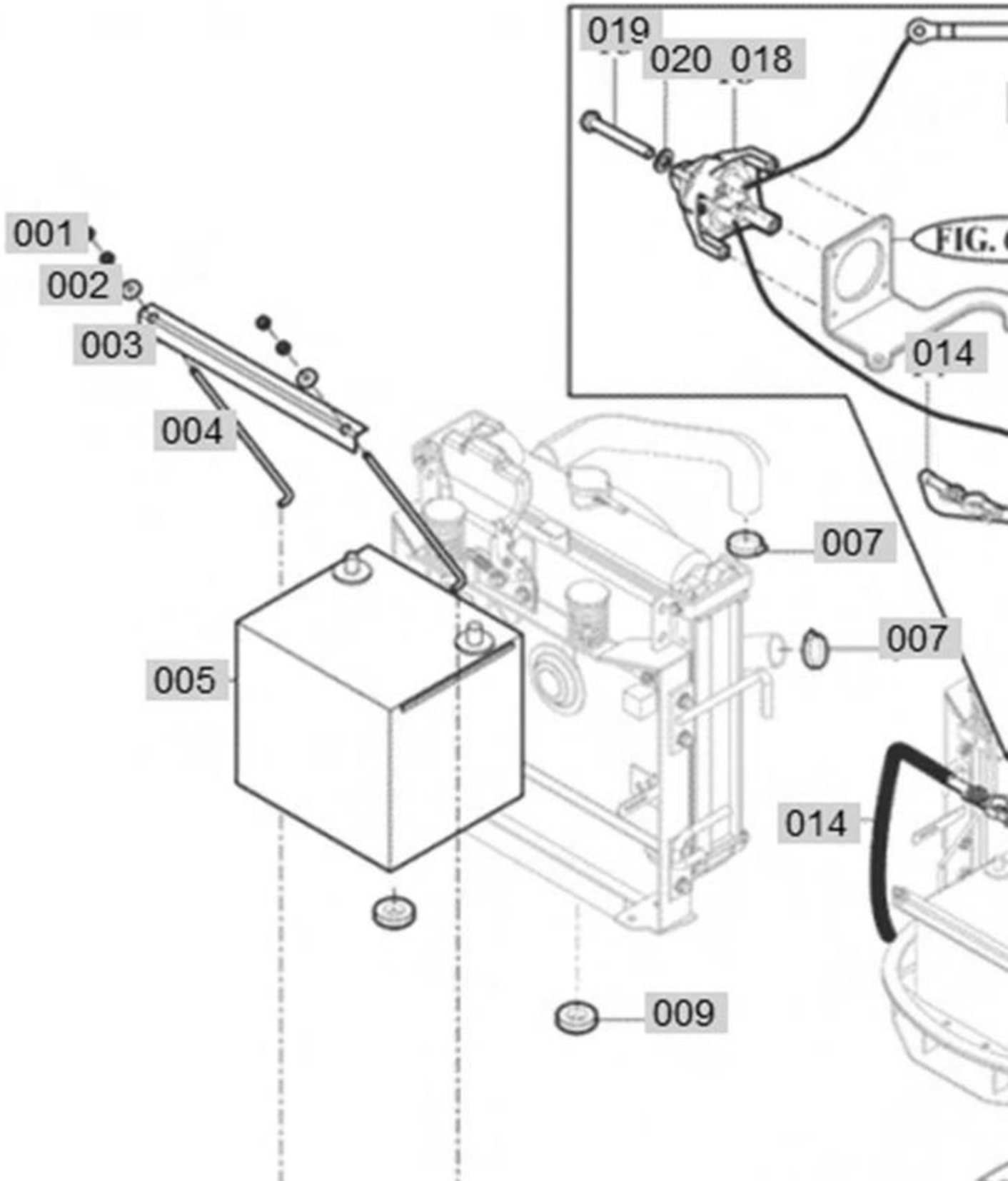

FIG 801 Branson 2505h_EU	BATTERY MOUNTING	Year/Month 2020-09

KeyNo.	Part Number	Part Name	Quantity	Other
001	V3002600060	NUT	4	
002	35605033020	WASHER , WIRE WITHDRAWAL	2	
003	TA00059716A	PLATE , BATTERY SET	1	
004	13151120061	BATTERY SET BOLT	2	
005	11106000521		1	
007	14445100080C	CLAMP 40	2	
009	15156210300A	RUBBER A (RADIATOR)	2	
010	14046210300	GROMMET	1	
011	35652030040A	COLLAR	1	
013	V2183608025	BOLT(SP)	1	
014	11126684201		1	
015	11116502001	CABLE ASSY	1	
016	V3802600080	NUT	1	
017	12126684400		1	
018	12120028430		1	
019	26557-050302	SCREW , C/R PAN	4	
020	V4111600050	WASHER, PLAIN	4	

FIG 802	INSTRUMENT PANEL
2505H	

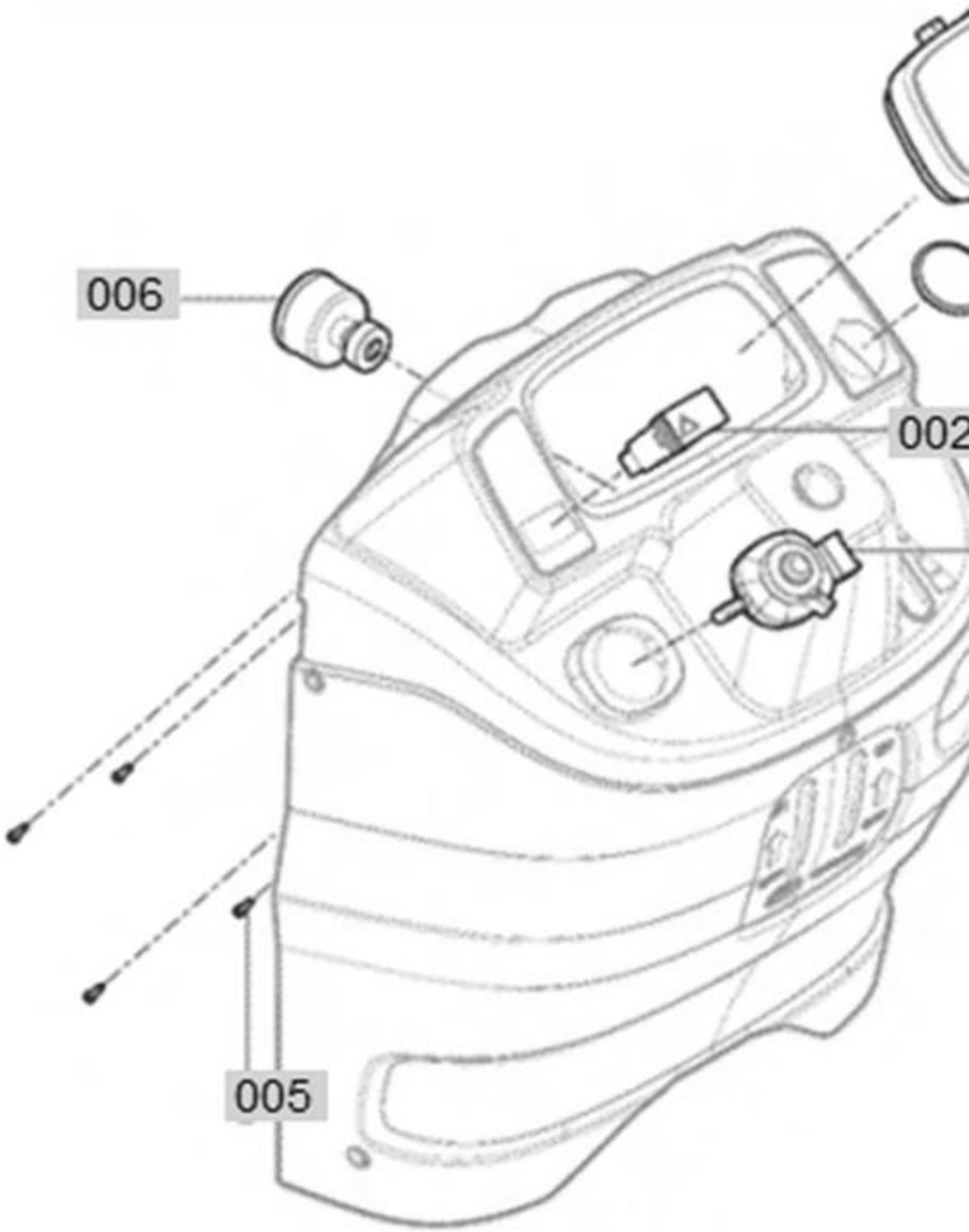

FUEL TANK

FIG 802 Branson 2505h_EU	INSTRUMENT PANEL	Year/Month 2020-09

KeyNo.	Part Number	Part Name	Quantity	Other
001	11146602000	PANEL	1	
002	14537072501	CAP HAZARD SWITCH ASSY	1	
003	11106644000	PTO SWITCH ASSY	1	
004	13276642201	SWITCH , COMBI	1	
005	V1922604016	BOLT	4	
006	14527078701B	SWITCH SET, KEY	1	
008	11126683001		1	

FIG 803	HARNESS
2505H	

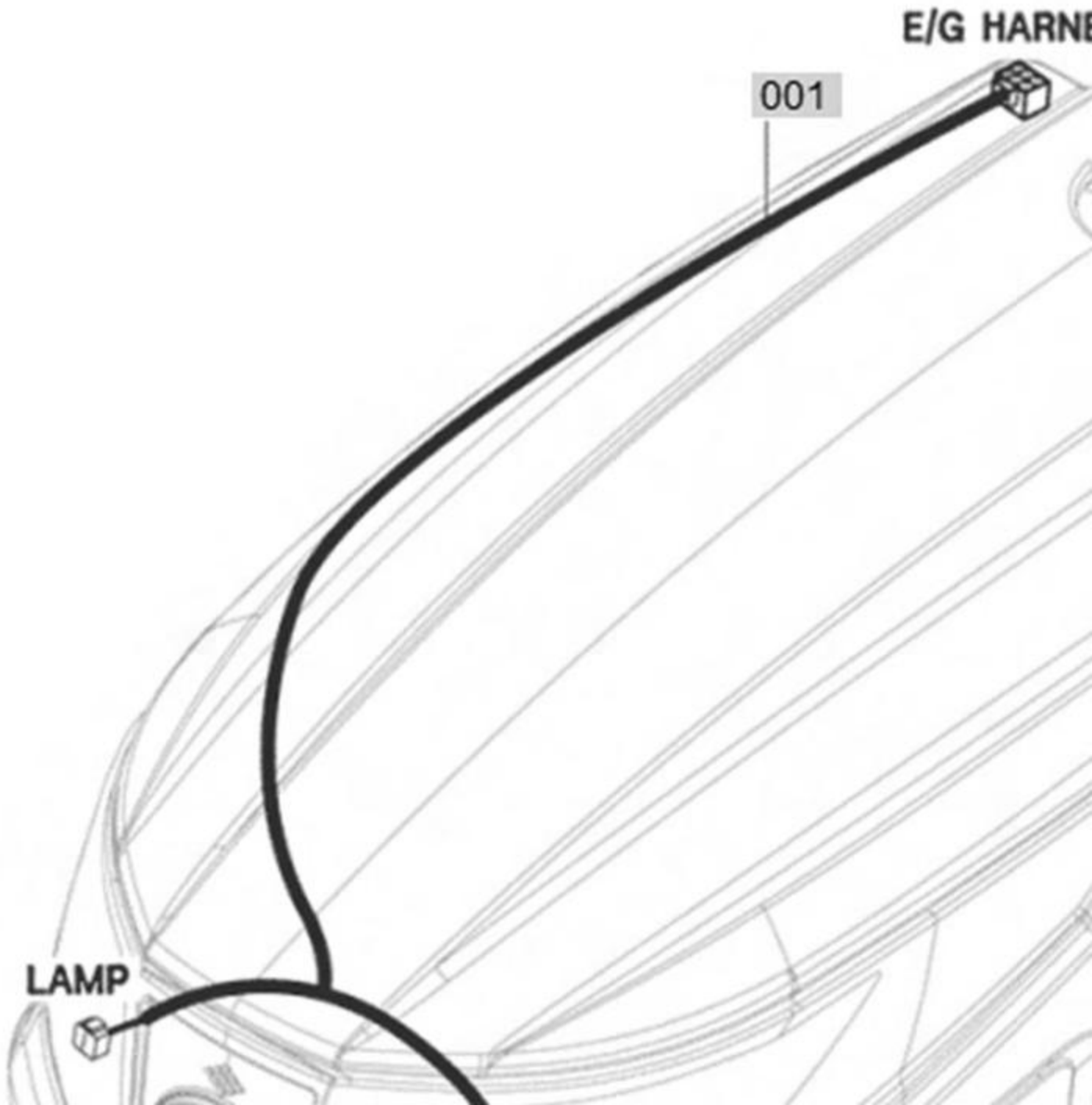

FIG 803 Branson 2505h_EU	HARNESS	Year/Month 2020-09

KeyNo.	Part Number	Part Name	Quantity	Other
001	11116683100	HARNESS ASSY , HEAD LAMP	1	

FIG 804

2505H

HARNESS

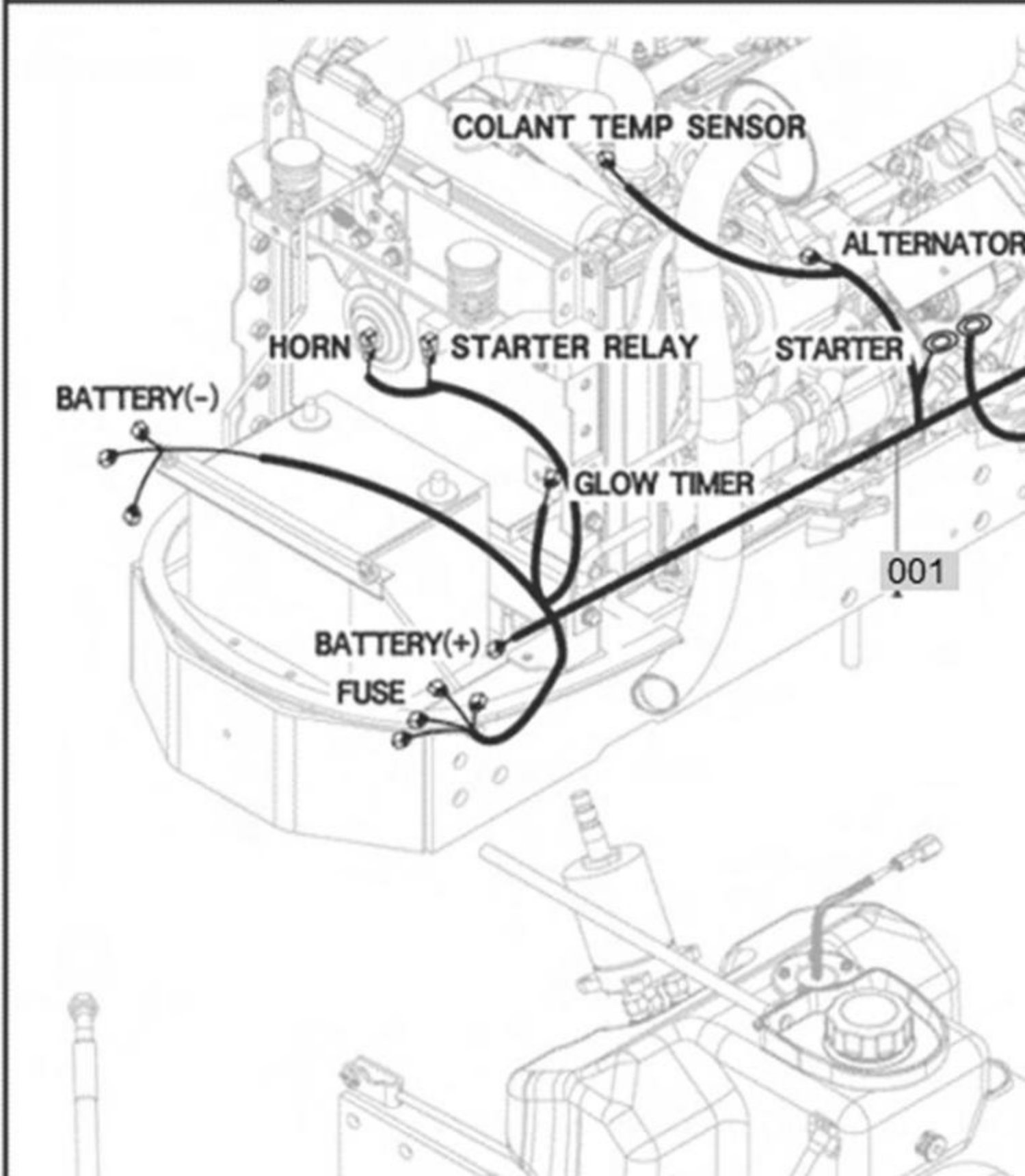

FIG 804 Branson 2505h_EU	HARNESS	Year/Month 2020-09

KeyNo.	Part Number	Part Name	Quantity	Other
001	11126682003		1	
002	11106684300	HARNESS ASSY , EARTH	1	

FIG 805

2505H

HARNESS

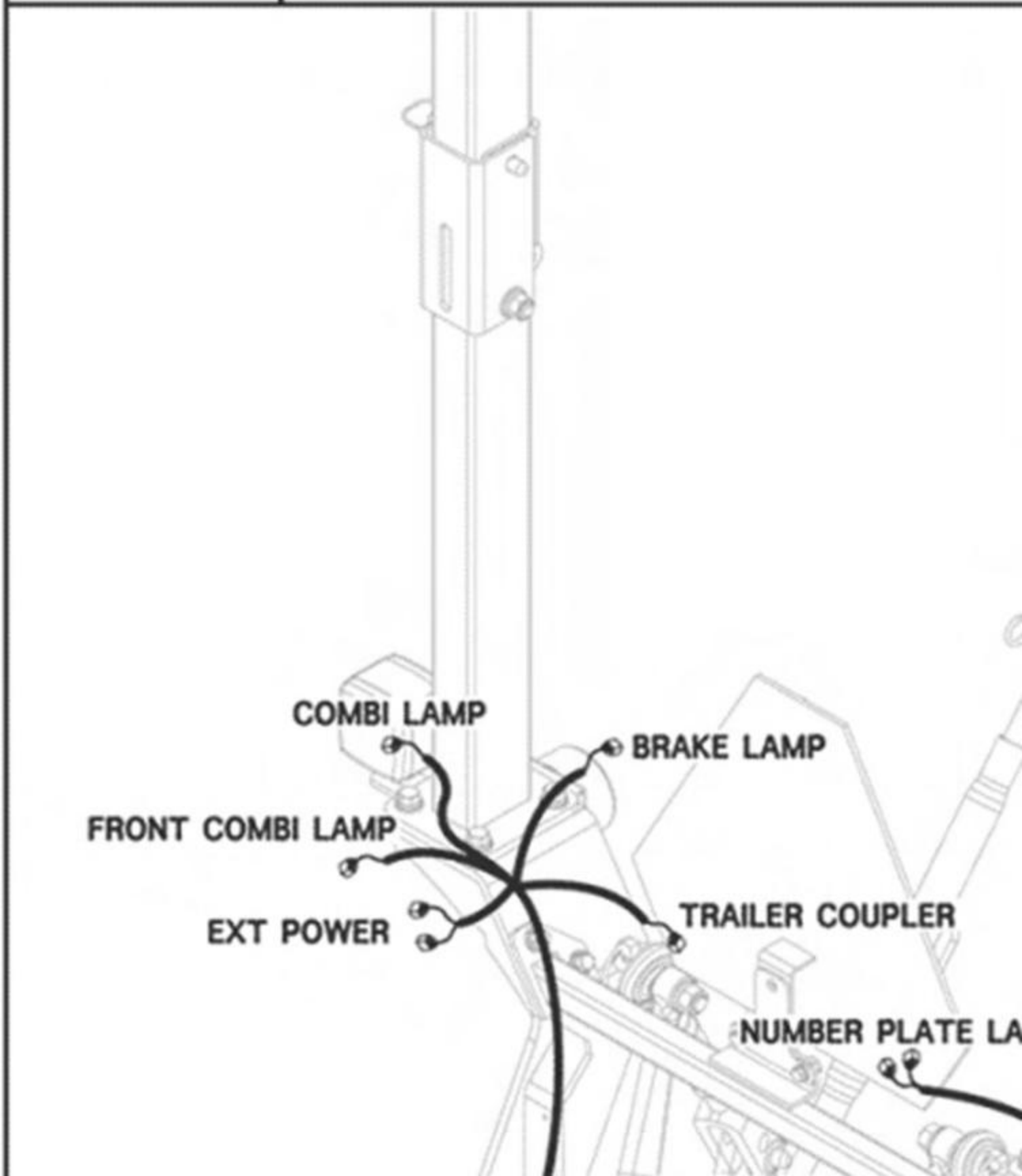

FIG 805 Branson 2505h_EU	HARNESS	Year/Month 2020-09

KeyNo.	Part Number	Part Name	Quantity	Other
001	11126684003		1	

FIG 901	TOOL & ACCESSORY
2505H	

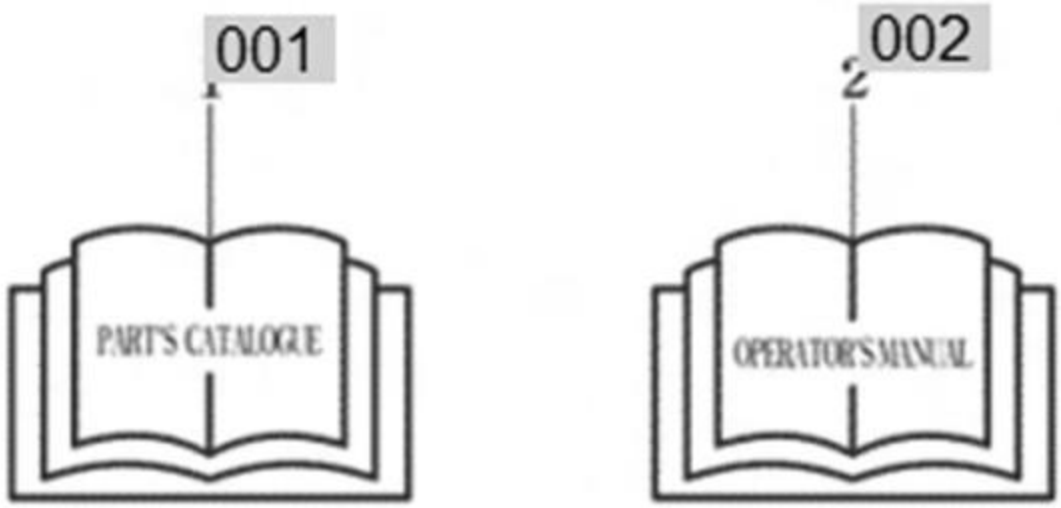

FIG 901 Branson 2505h_EU	TOOL & ACCESSORY	Year/Month 2020-09

KeyNo.	Part Number	Part Name	Quantity	Other
001	10299120030		1	
002	10299120020		1	
003	14215020020	LINK PIN	2	
004	12147078721	KEY SET , SDF	1	
005	12136213210		1	

FIG 902	WEIGHT
2505H	

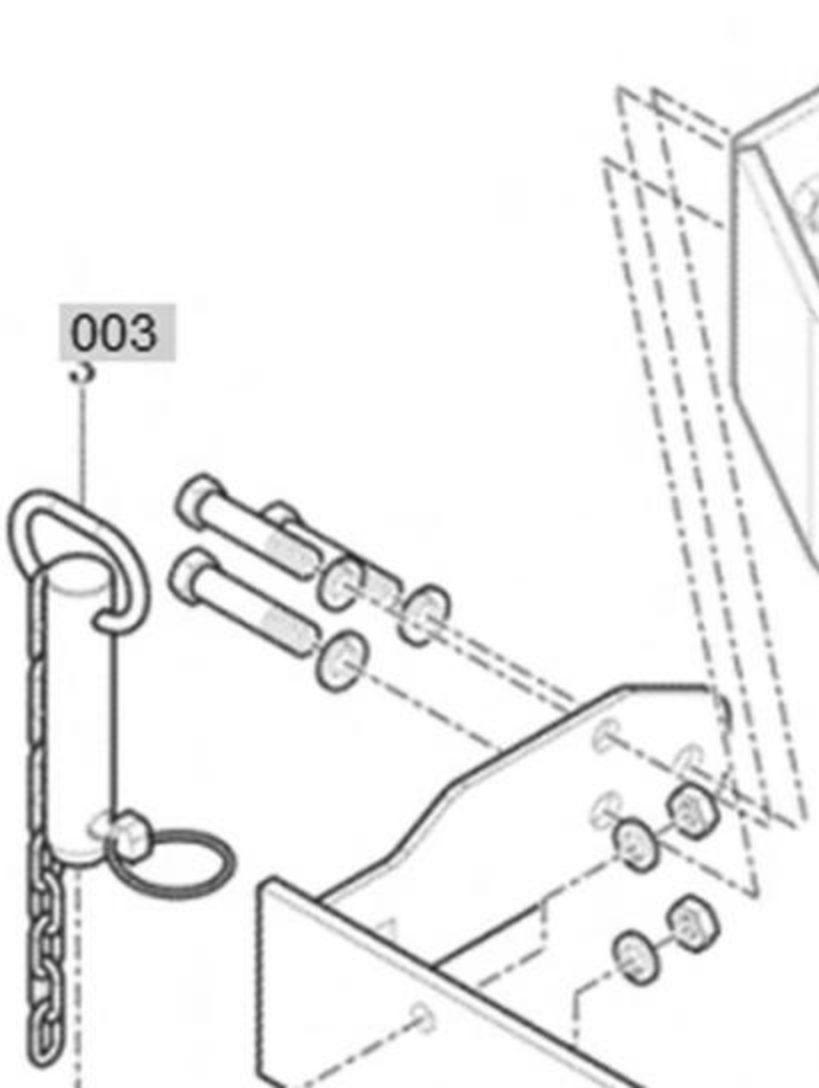

FIG 902 Branson 2505h_EU	WEIGHT	Year/Month 2020-09

KeyNo.	Part Number	Part Name	Quantity	Other
001	13604073200GB		1	
002	V2023612045		4	
003	13603063000		1	
004	V3343600120	NUT , HEX FINE/2	4	
005	11124092100GB		1	
006	V2004616040		4	
007	V4011600160	WASHER, SPRING	4	
008	V3043600160	NUT	4	
009	V4111600120	WASHER, PLAIN	4	
010	V4011600120	WASHER, SPRING	4	
011	V2013614035	BOLT , HEX	2	
012	V4011600140	WASHER, SPRING	2	

FIG 903	LABEL
2505H	

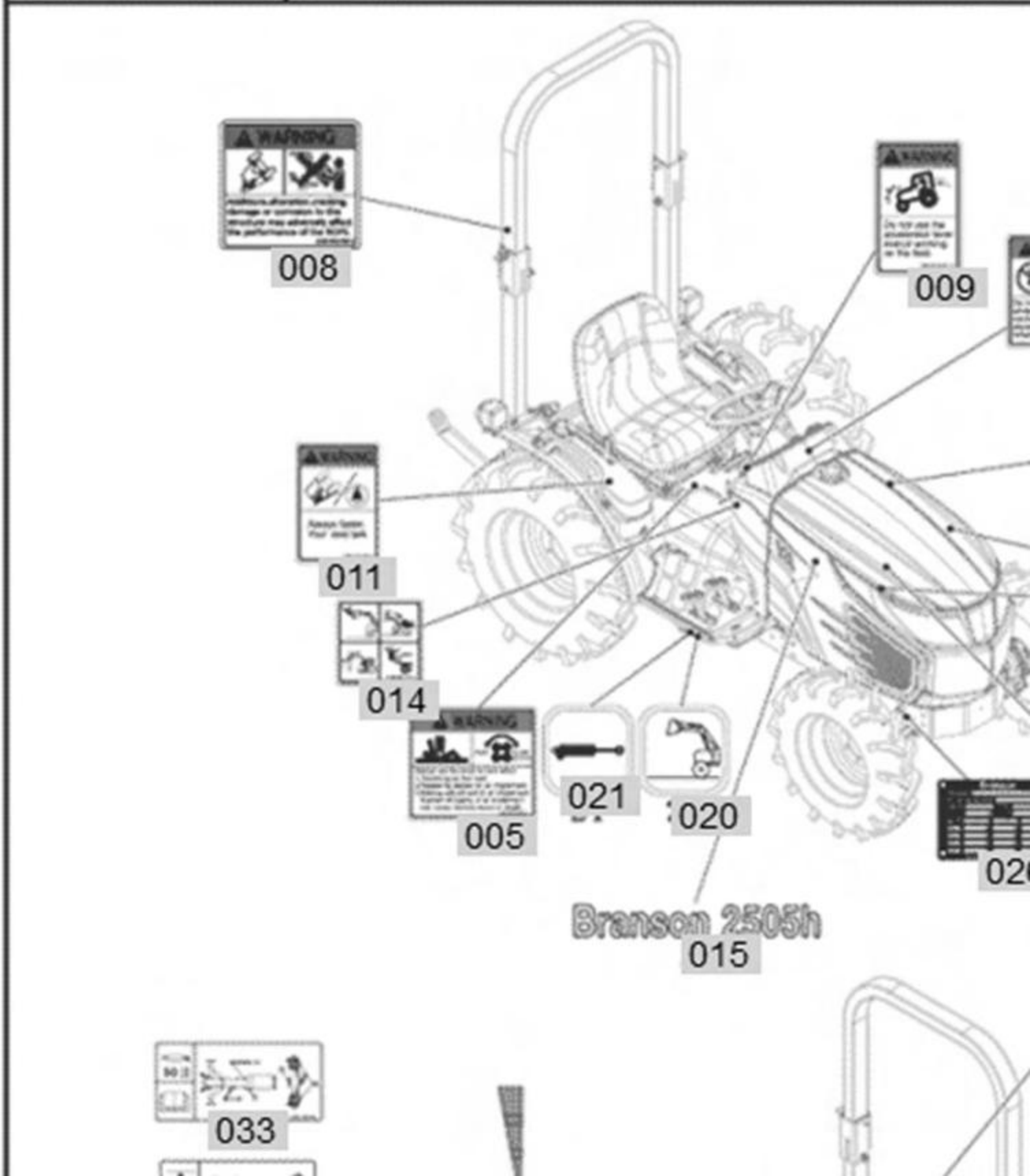

FIG 903 Branson 2505h_EU	LABEL	Year/Month 2020-09

KeyNo.	Part Number	Part Name	Quantity	Other
001	11109100012A	LABLE , PTO	1	
002	11109100021A	LABLE, 4WD	1	
003	11109100032A	LABLE, SUB SHIFT	1	
004	11109100041A	LABLE, POISTION	1	
005	12009100040	LABLE, WARNING/STOPVALVE	1	
006	12009100050A	LABLE, WARNING	1	
007	12009100060	LABLE, DIFF	1	
008	12209045051A	LABLE, WARNING/REMODEL	1	
009	12009100210	LABLE, WARNING THROTTLE	1	
010	12009100160	LABLE, DANGER RIDING	1	
011	12009100190	LABLE, WARNING BELT	1	
012	12009100240A	LABLE, CAUTION MUFFLER	1	
013	17689200050B	LABLE, DIFF	1	
014	17689100170A	LABLE, WARNING SAFETY	1	
015	11719010040	MARK, ORNAMENT(2505H)	2	
019	11209100250	LABLE, CAUTION HOT	1	
020	11209100260	LABLE, LOADER	1	
021	11209100270	LABLE, CYLINDER	1	
023	12609040620A	WARNING START	1	
024	12009100120	LABEL , CAUTION FAN	1	
025	12009100150	LABEL , CAUTION RADIATOR	1	
026	10299040220		1	
027	11129100020		1	
031	11129100150		1	
032	12127025120		1	
033	12519100130		1	
034	12519100140		1	

FIG 904

2505H

LABEL

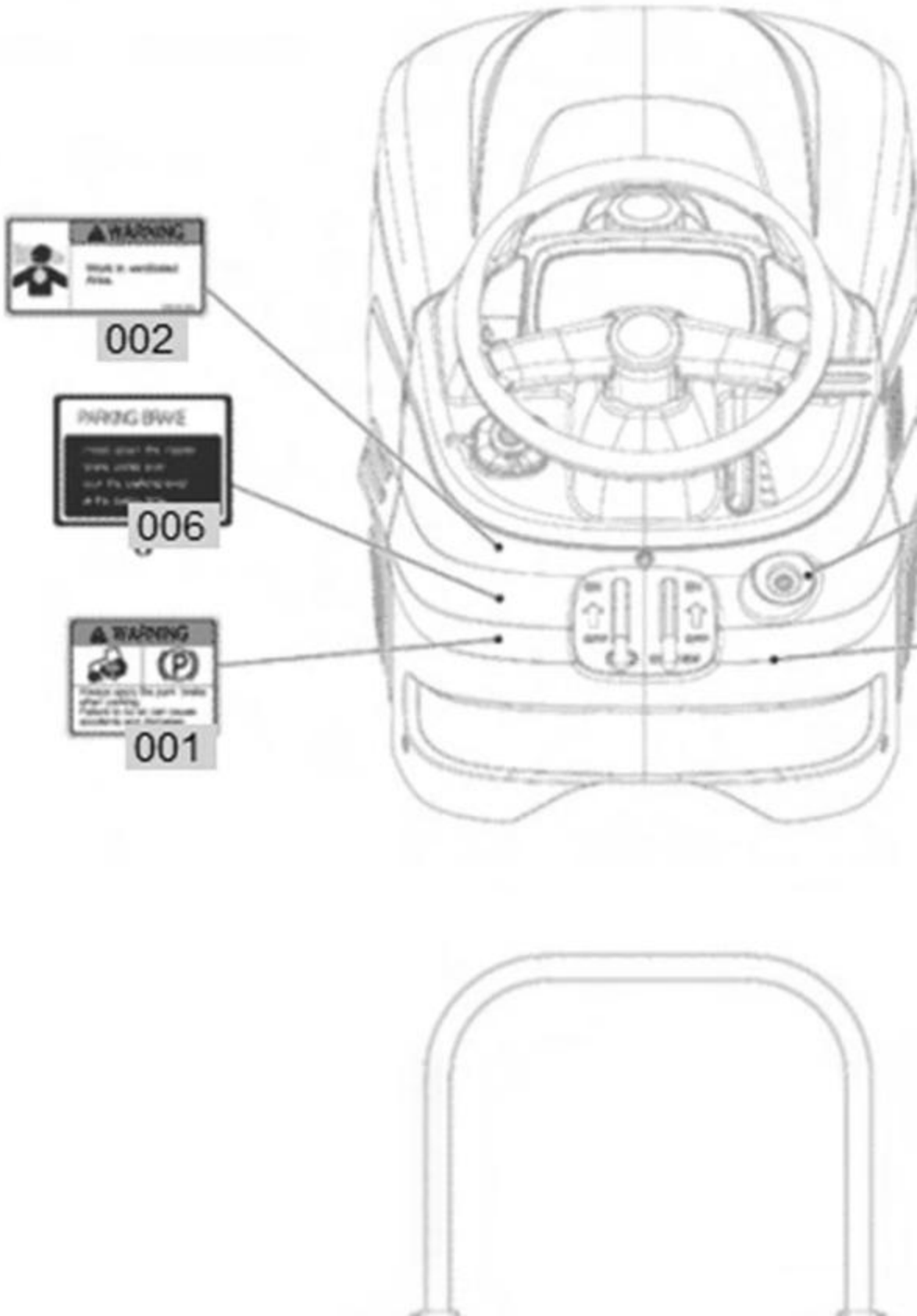

FIG 904 Branson 2505h_EU	LABEL	Year/Month 2020-09

KeyNo.	Part Number	Part Name	Quantity	Other
001	12009100020A	LABLE, WARNING PARKING	1	
002	12009100030A	LABLE, WARNING EXHAST	1	
003	12009100130	LABLE, WARNING/PTO	1	
004	12009100140	LABLE, WARNING DRAW	1	
005	12009100230	LABLE, WARNING	1	
006	14729040130A	LABLE, PARKING	1	
007	13739040690		1	
008	12209045010	LABLE(ROPS DANGER)	1	
009	12209045020	LABLE(ROPS WARNING)	1	
010	11129040960A	LABLE, KEY SWITCH	1	
011	11149040230		1	