KUKJE 3015H Branson Tractor

Parts Catalogue

BRANSON TRACTOR

CONTENTS

GROUP NO	GROUP NAME	PAGE
C000	15H(US)	5
C001	LEVER ACCELERATOR	7
C002	STEERING COLUMN(2017.01)	9
C003A-1	FRONT AXLE BRACKET	11
C003A-2	FRONT AXLE BRACKET(201810~)	13
C003A-3	FRONT AXLE BRACKET(2019.12~)	15
C009-1	CENTAPIN SUPPORTER	17
C009-2	CENTAPIN SUPPORTER	19
C009-2N	CENTAPIN SUPPORTER	21
C010	TIEROAD	23
C012	RING GEAR, DRIVEN GEAR	25
C012N-2	RING GEAR, DRIVEN GEAR	27
C019-1	GEAR CASE, FRONT AXLE	29
C019-2	GEAR CASE, FRONT AXLE	31
C019-3	GEAR CASE, FRONT AXLE	33
C019-3N	GEAR CASE, FRONT AXLE	35
C020	SPACER	37
C032	P.S.T CYLINDER	39
C034-1	P.S.T HOSE(2017.01)	41
C034-2	P.S.T HOSE	43
C037A-1	CLUTCH HOUSING	45
C037A-2	CLUTCH HOUSING(2019.04~)	47
C038-1	PUMP, HST	49
C044-1	TRANSMISSION CASE	51
C044-2	TRANSMISSION CASE	53
C044-3	TRANSMISSION CASE(2018.04~)	55
C044-4	TRANSMISSION CASE(2018.04~)	57
C057A	GEAR, RANGE SHIFT	59
C062	MAIN P.T.O SHAFT	61
C063-1	PTO DRIVE SHAFT	63
C063-2	PTO DRIVE SHAFT(2017.02)	65
C063B-3	PTO DRIVE SHAFT(2019.01~)	67
C068	LEVER ASS'Y, RANGE SHIFT	69
C072-1	FORNT DRIVE SHAFT	71
C072A-2	FORNT DRIVE SHAFT(2019.04~)	73

GROUP NO	GROUP NAME	PAGE
C072E-2	FORNT DRIVE SHAFT(2019.04~)	75
C073-1	4WD LEVER	77
C073-2	4WD LEVER(2019.04~)	79
C074-1	FORK & LEVER, PTO-DELETED PAGE	81
C074-2	FORK & LEVER, PTO(2019.04~)-DELETED PAGE	83
C074B-3	FORK & LEVER, PTO(2019.12~)	85
C078	RING GEAR&DIFF.GEAR ASS'Y	87
C079-1	DIFFERENTIAL	89
C079-2	DIFFERENTIAL	91
C082	DRIVING PART, REAR AXLE	93
C083	BRAKE	95
C090	BRAKE PEDAL	97
C091	PARKING BRAKE	99
C092A	HYD PUMP	101
C093	HYD SHIFT TRANSMISSION PEDAL	103
C101-1	CASE, HYD CYLINDER	105
C101-2	CASE, HYD CYLINDER(2016.06)	107
C104	PISTON ASS'Y	109
C108	SAFETY VALVE	111
C109	STOP VALVE	113
C111.1	HYD CONTROL POSITION TYPE	115
C111.2	HYD CONTROL POSITION TYPE	117
C113	DRAFT CONTROL	119
C114A-1	HYD PIPING(2017.01)	121
C114A-2	HYD PIPING	123
C114A-3	HYD PIPING	125
C115	OIL COOLER	127
C118	HYD FILTER	129
C119A-1	ELE'C WIRING(2015.06)	131
C119A-2	ELE'C WIRING	133
C119B-3	ELE'C WIRING	135
C124B	BATTERY	137
C125-1	SWITCH	139
C125-2	SWITCH	141
C135.1-1	BONNET	143

GROUP NO	GROUP NAME	PAGE
C135.1-2	BONNET(2018.08~)	145
C135.1-3	BONNET(2019.04~)	147
C135.1-4	BONNET(2019.12~)	149
C135.2	BONNET	151
C136-1	LOCKING ASS'Y, BONNET	153
C136-2	LOCKING ASS'Y, BONNET(2019.04~)	155
C136-3	LOCKING ASS'Y, BONNET(2019.12~)	157
C137A-1	BONNET SUPPORT	159
C137A-2	BONNET SUPPORT (2018.02)	161
C137B-3	BONNET SUPPORT (2018.02)	163
C138	FENDER	165
C139	FOOT REST ASS'Y	167
C141A-1	FUEL TANK	169
C141A-2	FUEL TANK(2017.01)	171
C141A-3	FUEL TANK(2017.01)	173
C144A-1	NAME PLATE	175
C144B-2	NAME PLATE	177
C146	TOP LINK, LIFT LINK	179
C150	LOWER LINK	181
C152-1	DRAWBAR HITCH	183
C152-2	DRAWBAR HITCH	185
C158A-1	ROPS FRAME ASS'Y	187
C158A-2	ROPS FRAME ASS'Y	189
C161.1A-1	ENGINE SUB	191
C161.1B-1	ENGINE SUB	193
C161.2A-1	ENGINE SUB-2	195
C161.2A-2	ENGINE SUB - 2 (2016.06)	197
C161.2A-3	ENGINE SUB- 2 (2016.06)	199
C191	RELIEF VALVE	201
C192-1	SUN VISOR	203
C192-2	SUN VISOR(2017.12)	205

FIG C000 3015H	15H(US)	Year/Month 2020/01

CHASSIS

ENGINE

FIG C000 3015H	15H(US)	Year/Month 2020/01

KeyNo.	Part Number	Part Name	Quantity	Other

FIG C001 3015H	LEVER ACCELERATOR	Year/Month 2020/01

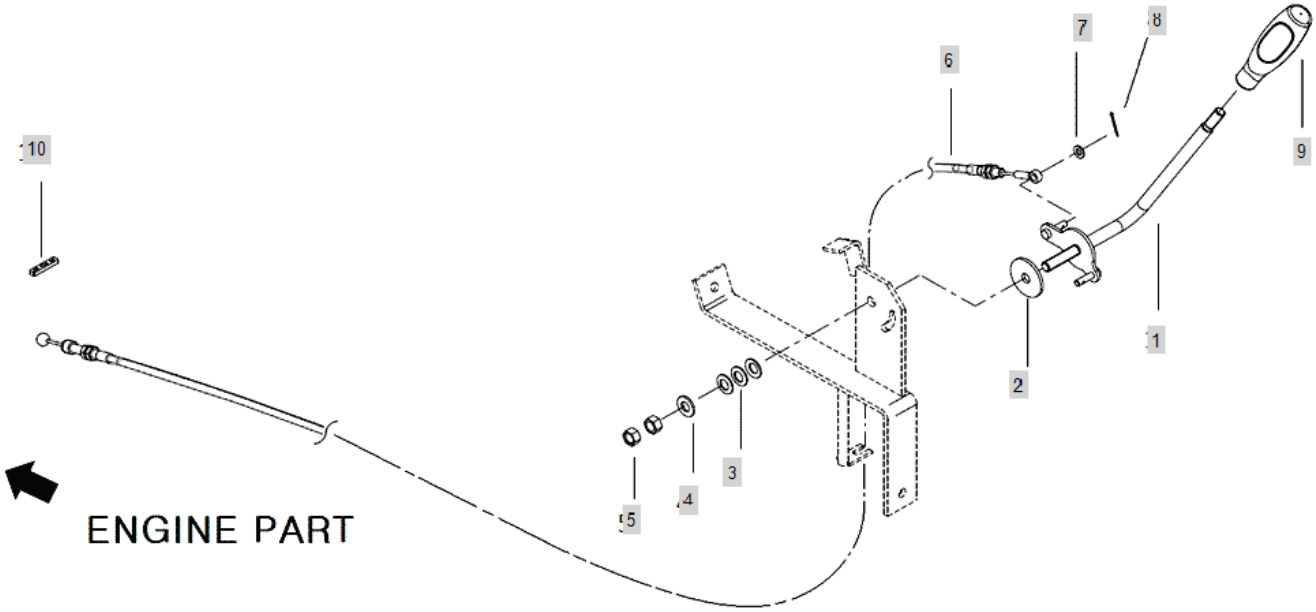

FIG C001 3015H	LEVER ACCELERATOR	Year/Month 2020/01

KeyNo.	Part Number	Part Name	Quantity	Other
1	TA00040924A	ACCEL LEVER	1	
2	TC45060000A4	FRICTIONPLATE	1	
3	TC45010000A4	SPRINGWASHER10	3	
4	22137-100000	WASHER, PLAIN (Φ 10)	1	
5	26716-100002	Nut, Hexa (Φ10)	2	
6	TA00043815A	WIRE	1	
7	22137-060000	WASHER , PLAIN	1	
8	22417-160180	PIN , COTTER (1-18)	1	
9	TA00015801B	KNOB, ACCELERATOR	1	
10	TC45040000A4	RUBBER	1	

FIG C002 3015H	STEERING COLUMN(2017.01)	Year/Month 2020/01

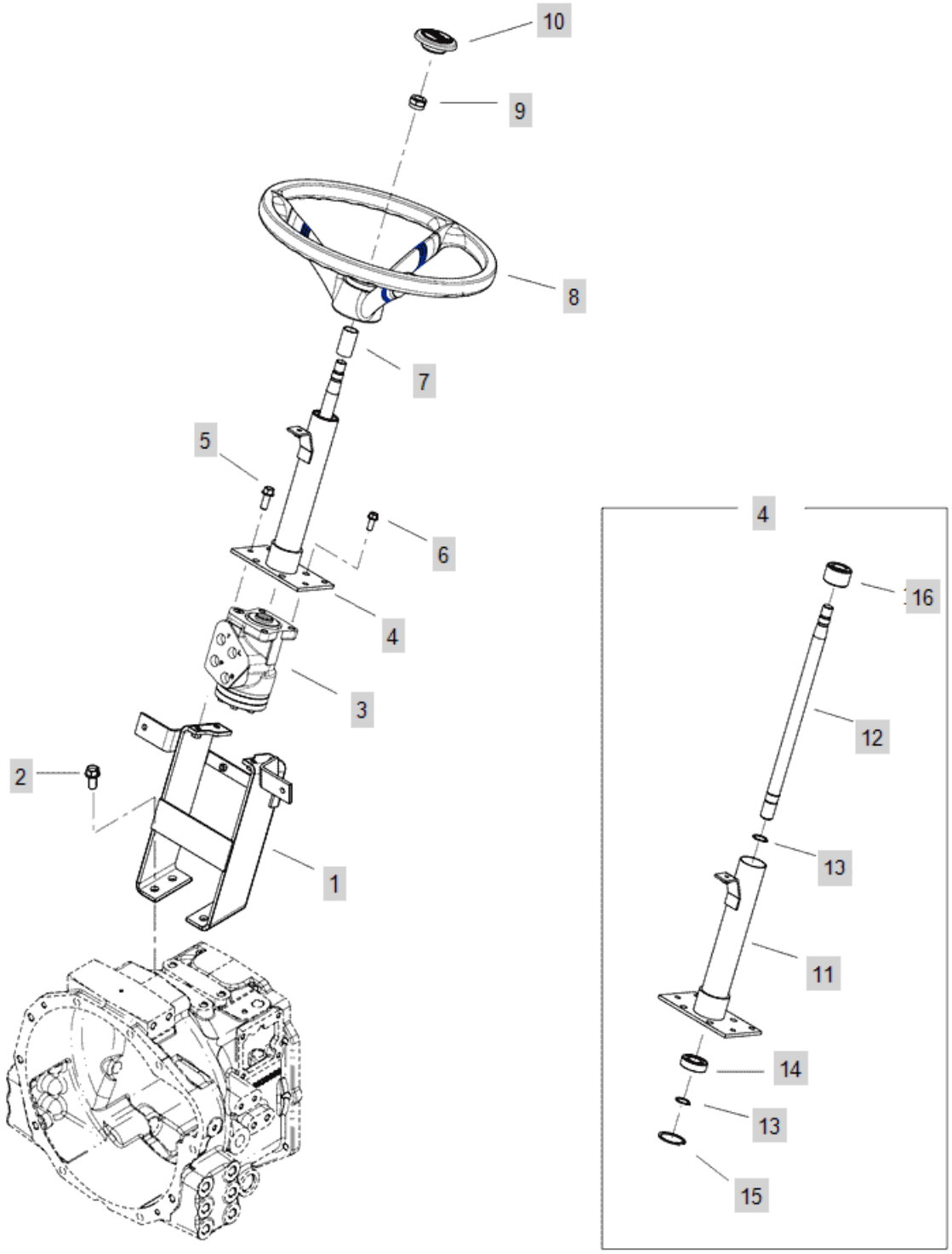

FIG C002 3015H	STEERING COLUMN(2017.01)	Year/Month 2020/01

KeyNo.	Part Number	Part Name	Quantity	Other
1	TA00039159G	SUPPROT, STEERING	1	
2	26106-120252	HEX FLANGE BOLT	4	
3	TA00041589A	P.S.T VALVE	1	
4	TA00040881D	COLUMN ASSY	1	
5	26136-100252	SCREW, HEX FLANGE HEAD CAP	3	
6	26106-080202	SQR FLANGE BOLT	4	
7	TA00041364A	COVER	1	
8	TZ29030000A1	STEERING WHEEL	1	
9	TA00048436A	U-NUT	1	
10	TA00055307A	CAP	1	
10-1	TA00026432A	STEERING WHEEL CAP (BRANSON)	1	
10-2	TA00026432A	STEERING WHEEL CAP (BRANSON)	1	delete
10-3	TA00037069A	STEERING CAP	1	delete
11	TA00040226C	COLUMN PIPE ASSY	1	
12	TA00040545B	STEERING SHAFT	1	
13	22242-000200	SNAP RING, SHAFT (Φ 20)	2	
14	24107-060044	Bearing, Ball (#6004) Dubble Cap	1	
15	22252-000420	RING, CIRCLIP (Φ 42)	1	
16	TC65020400A9	COLUMNBUSH	1	

FIG C003A-1 3015H	FRONT AXLE BRACKET	Year/Month 2020/01

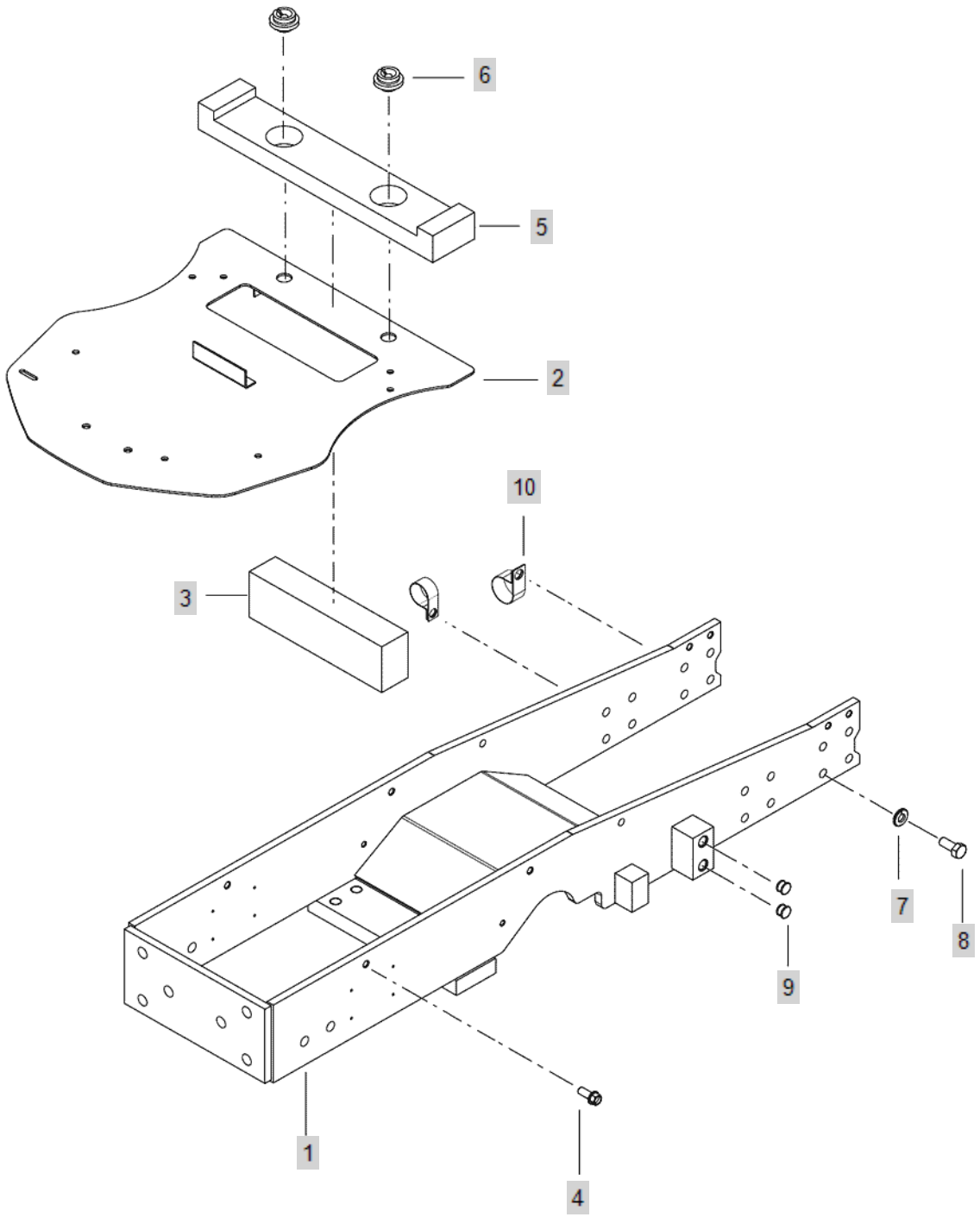

FIG C003A-1 3015H	FRONT AXLE BRACKET	Year/Month 2020/01

KeyNo.	Part Number	Part Name	Quantity	Other
1	TA00039090E	FRONT BRACKET ASS'Y	1	
2	TA00039416E	PLATE ASS'Y	1	
3	TA00040607B	URETHANE	1	
4	26106-100202	HEX BOLT, (10-20)	4	
5	TA00040608B	URETHANE	1	
6	HRA1203300A4	RUBEER, VIBRATION PROOF	2	
7	TT08220000A4	LOCKSPRINGWASHER	16	
8	TC54220000A4	TC54220000A4	16	
9	TTD4300000A4	PLUG15	4	
10	TA00003081A	CLIP	2	

FIG C003A-2 3015H	FRONT AXLE BRACKET(201810~)	Year/Month 2020/01

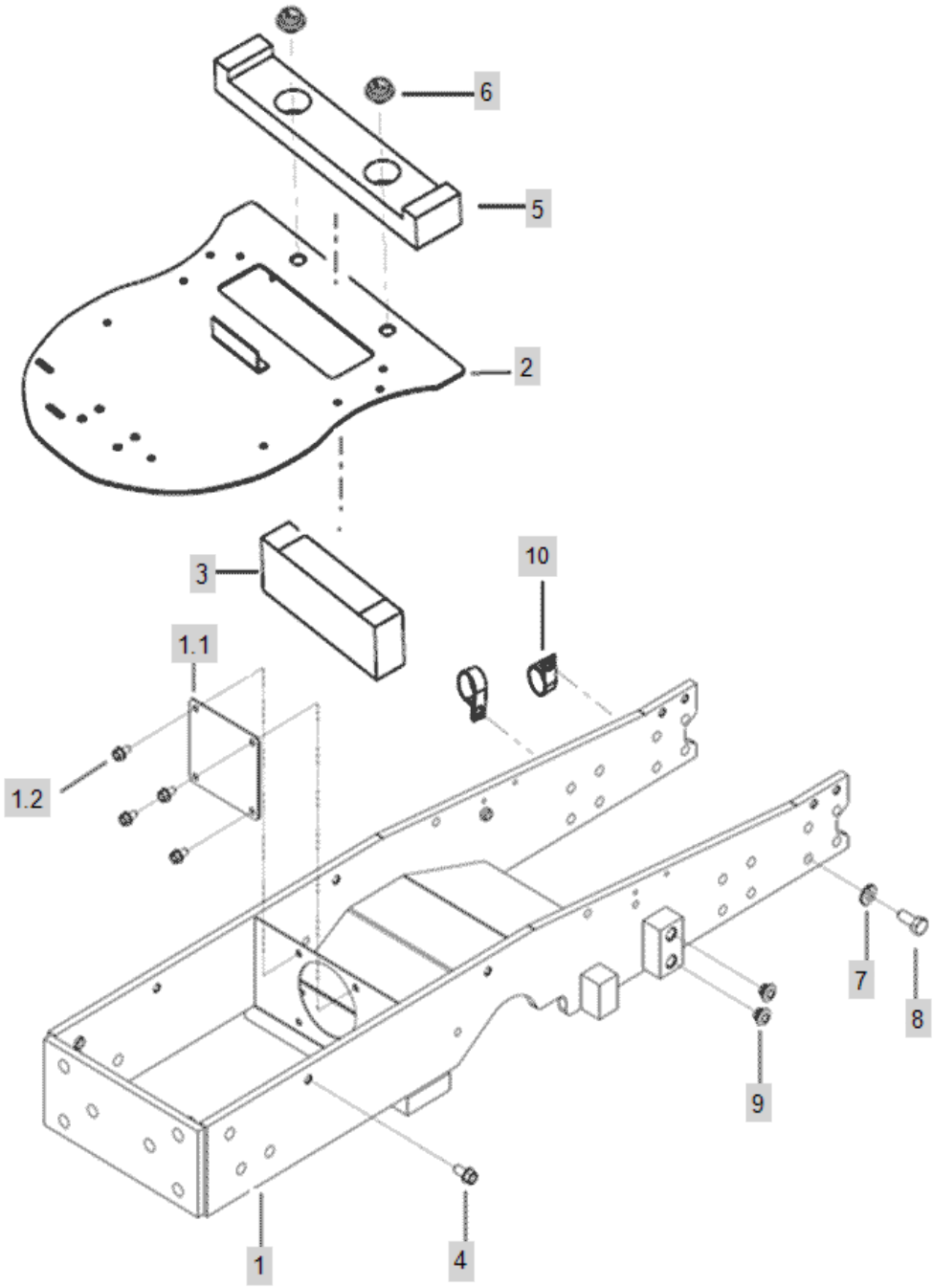

FIG C003A-2 3015H	FRONT AXLE BRACKET(201810~)	Year/Month 2020/01

KeyNo.	Part Number	Part Name	Quantity	Other
1	TA00048469F	FRONT AXLE BRACKET	1	
1.1	TA00057575A	COVER	1	
1.2	26106-080142	SCREW,HEXFLANGEHEADCAP	4	
2	TA00039416E	PLATE ASS'Y	1	
3	TA00040607C	URETHANE	1	
4	26106-100202	HEX BOLT, (10-20)	4	
5	TA00040608B	URETHANE	1	
6	HRA1203300A4	RUBEER, VIBRATION PROOF	2	
7	TT08220000A4	LOCKSPRINGWASHER	16	
8	TC54220000A4	TC54220000A4	16	
9	TA00055258A	PLUG(14)	4	
10	TA00003081A	CLIP	2	

FIG C003A-3 3015H	FRONT AXLE BRACKET(2019.12~)	Year/Month 2020/01

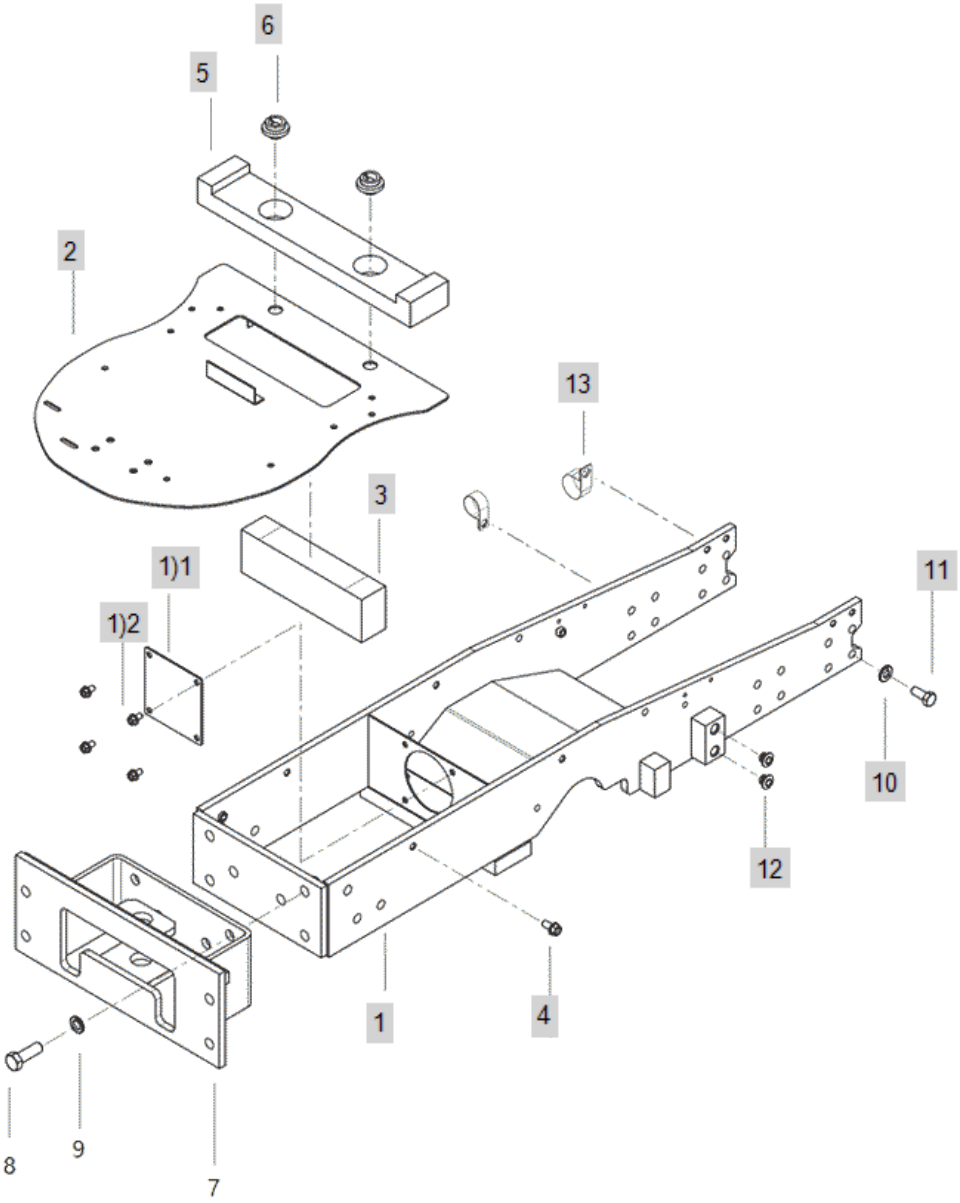

FIG C003A-3 3015H	FRONT AXLE BRACKET(2019.12~)	Year/Month 2020/01

KeyNo.	Part Number	Part Name	Quantity	Other
1	TA00048469G	FRONT AXLE BRACKET	1	
1)1	TA00057575A	COVER	1	
1)2	26106-080142	SCREW,HEXFLANGEHEADCAP	4	
2	TA00039416E	PLATE ASS'Y	1	
3	TA00040607C	URETHANE	1	
4	26106-100202	HEX BOLT, (10-20)	4	
5	TA00040608B	URETHANE	1	
6	HRA1203300A4	RUBEER, VIBRATION PROOF	2	
10	TT08220000A4	LOCKSPRINGWASHER	16	
11	TC54220000A4	TC54220000A4	16	
12	TA00055258A	PLUG(14)	4	
13	TA00003081A	CLIP	2	

FIG C009-1 3015H	CENTAPIN SUPPORTER	Year/Month 2020/01

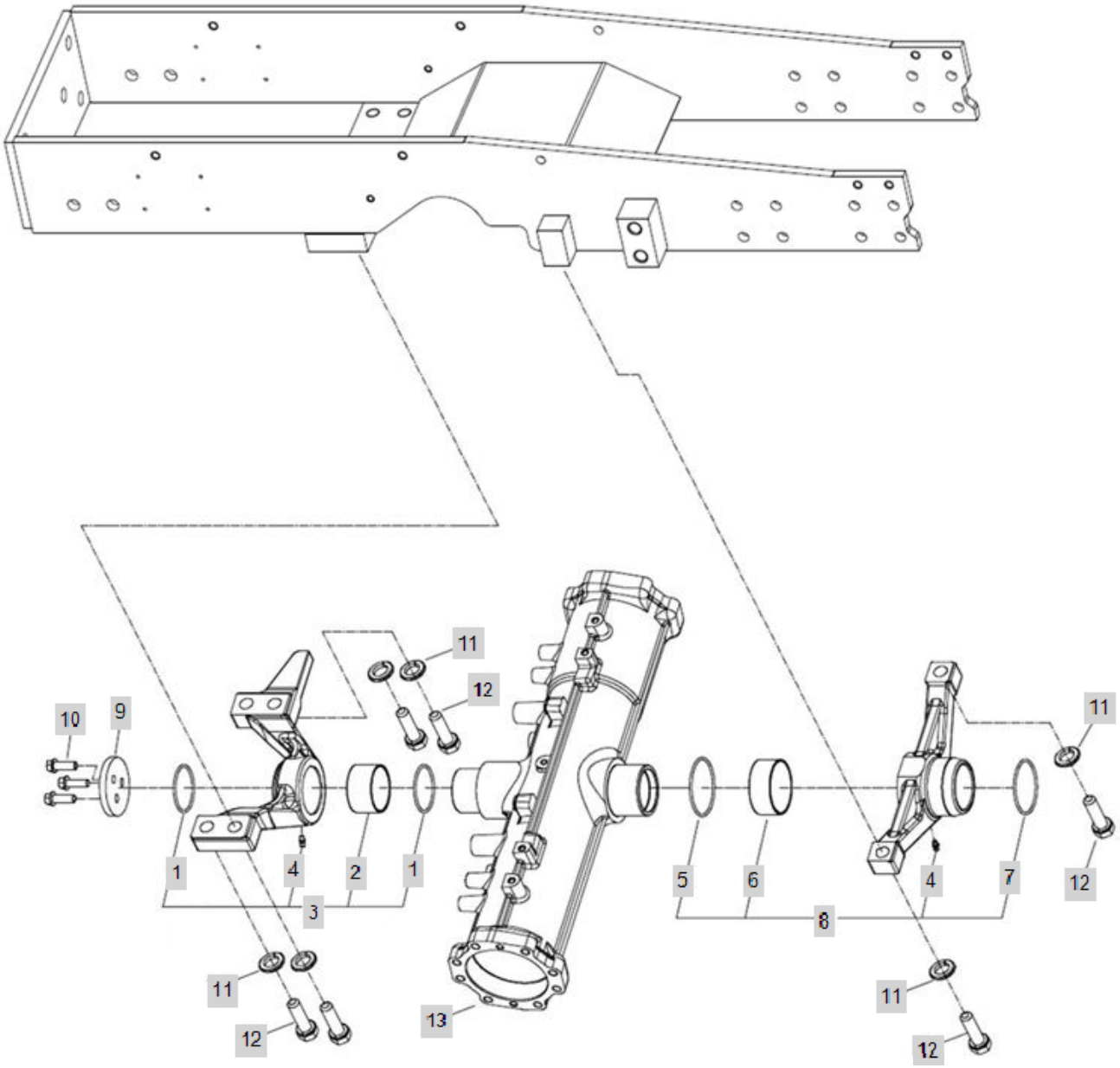

FIG C009-1 3015H	CENTAPIN SUPPORTER	Year/Month 2020/01

KeyNo.	Part Number	Part Name	Quantity	Other
1	24321-000600	SEAL,ORING	2	
2	TA00034105A	BUSH	1	
3	TA00034104A	AXLE SUPPORT(FRONT) ASS'Y	1	
4	24764-060000	GREASE NIPPLE	1	
5	24321-000750	SEAL,ORING	1	
6	TA00034103A	BUSH	1	
7	24321-000700	O-RING1AG-70	1	
8	TA00034102C	AXLE SUPPORT (REAR)	1	
9	TC55020000A4		1	
10	26106-100302	HEXFLANGEBOLT	3	
11	22217-160000	WASHER, SPRING (Φ 16)	6	
12	26116-160602	HEX BOLT	6	
13	TA00033449A	CASE, FRONT AXLE	1	

FIG C009-2 3015H	CENTAPIN SUPPORTER	Year/Month 2020/01

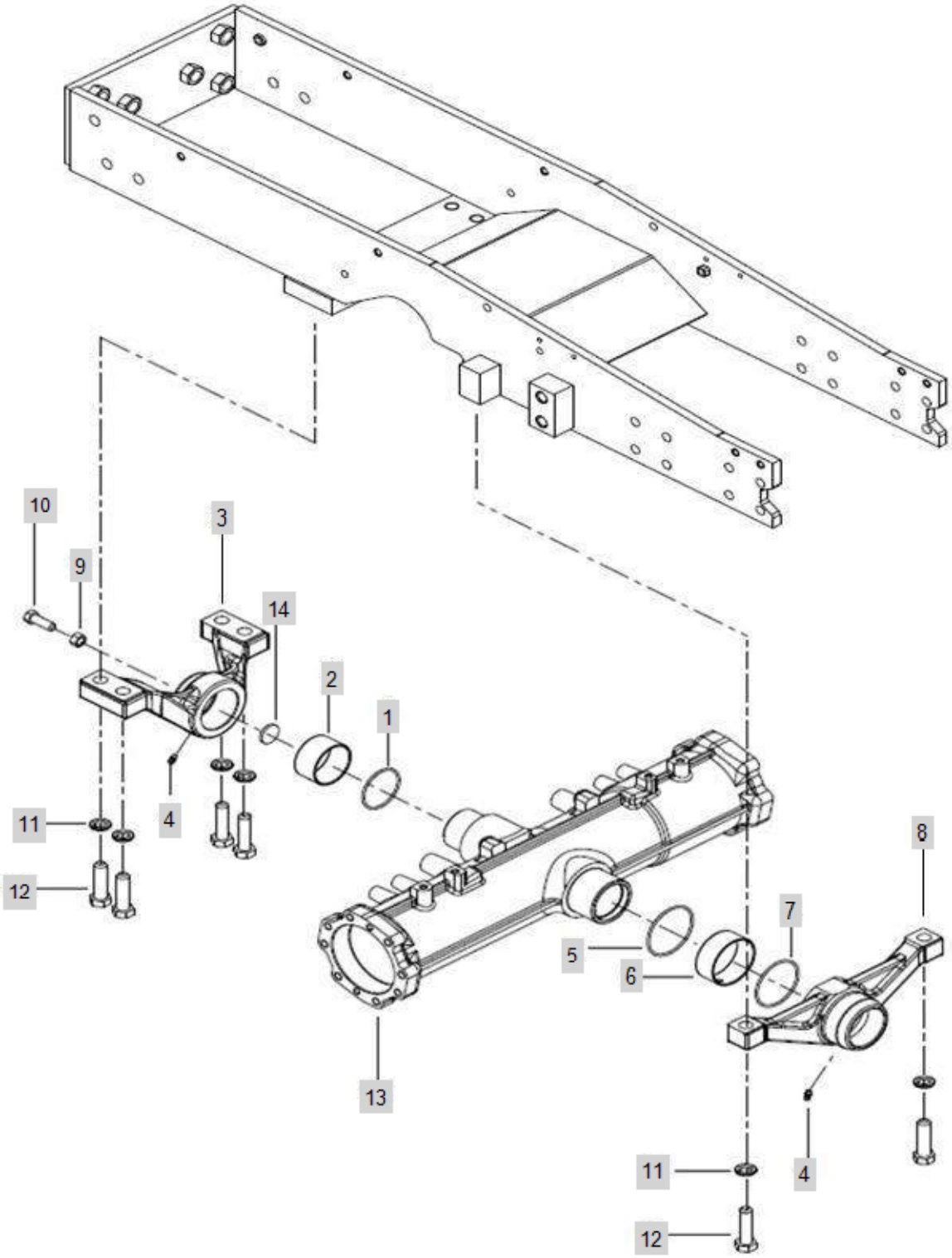

FIG C009-2 3015H	CENTAPIN SUPPORTER	Year/Month 2020/01

KeyNo.	Part Number	Part Name	Quantity	Other
1	24321-000600	SEAL,ORING	1	
2	TA00034105A	BUSH	1	
3	TA00048801A	FRONT AXLE SUPPROT ASS'Y	1	
4	24764-060000	GREASE NIPPLE	2	
5	24321-000750	SEAL,ORING	1	
6	TA00034103A	BUSH	1	
7	24321-000700	O-RING1AG-70	1	
8	TA00034102C	AXLE SUPPORT (REAR)	1	
9	26716-120002	BOLT,CYLINDER HEAD(B)	1	
10	26116-120354	BOLT	1	
11	22217-160000	WASHER, SPRING (Φ 16)	6	
12	26116-160602	HEX BOLT	6	
13	TA00048800A	CASE, FRONT AXLE	1	
14	TA00048803A	WASHER	1	

FIG C009-2N 3015H	CENTAPIN SUPPORTER	Year/Month 2020/01

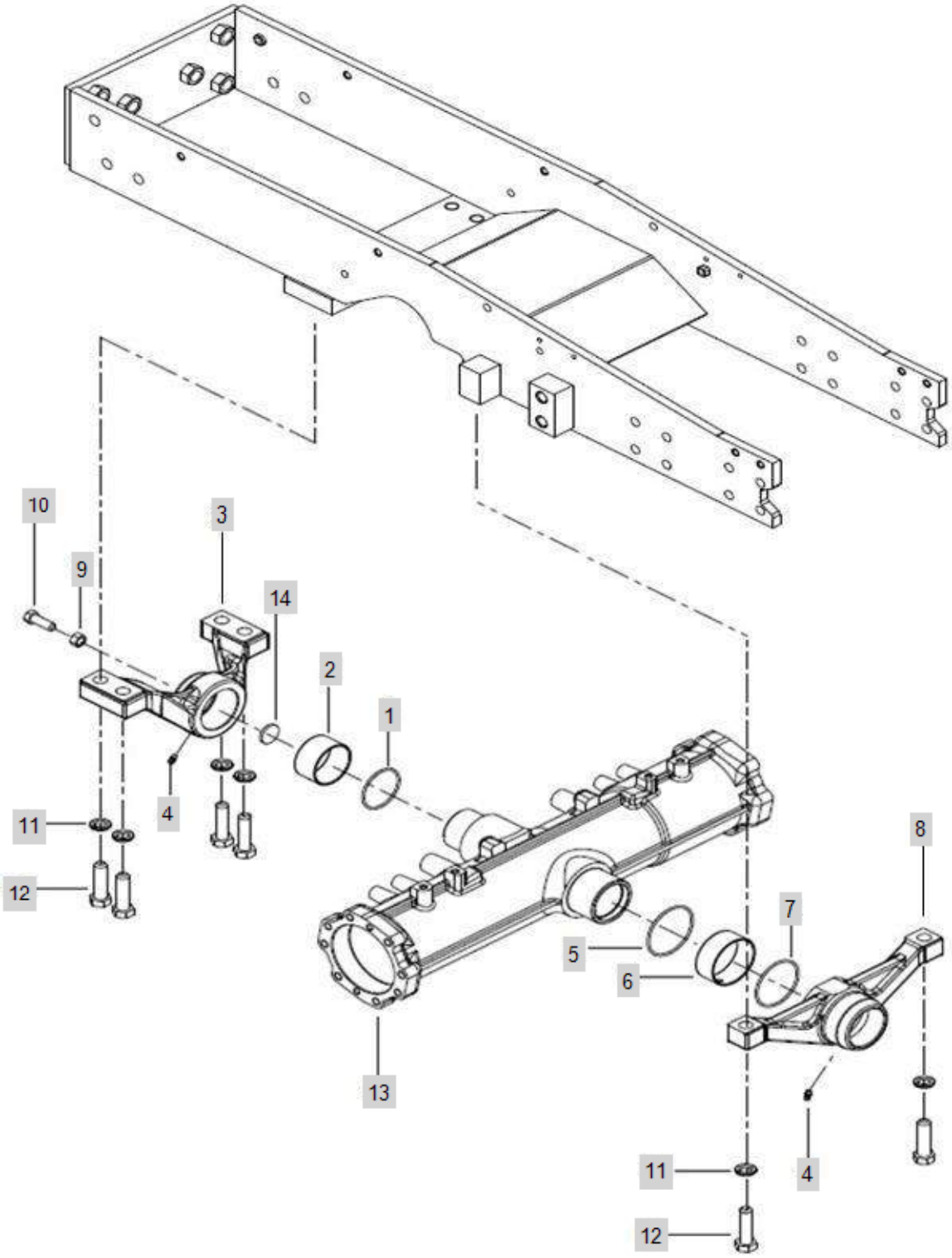

FIG C009-2N 3015H	CENTAPIN SUPPORTER	Year/Month 2020/01

KeyNo.	Part Number	Part Name	Quantity	Other
1	24321-000600	SEAL,ORING	1	
2	TA00034105A	BUSH	1	
3	TA00048801A	FRONT AXLE SUPPROT ASS'Y	1	
4	24764-060000	GREASE NIPPLE	2	
5	24321-000750	SEAL,ORING	1	
6	TA00034103A	BUSH	1	
7	24321-000700	O-RING1AG-70	1	
8	TA00034102C	AXLE SUPPORT (REAR)	1	
9	26716-120002	BOLT,CYLINDER HEAD(B)	1	
10	26116-120354	BOLT	1	
11	22217-160000	WASHER, SPRING (Φ 16)	6	
12	26116-160602	HEX BOLT	6	
13	TA00054778A	CASE, FRONT AXLE	1	
14	TA00048803A	WASHER	1	

FIG C010 3015H	TIEROAD	Year/Month 2020/01

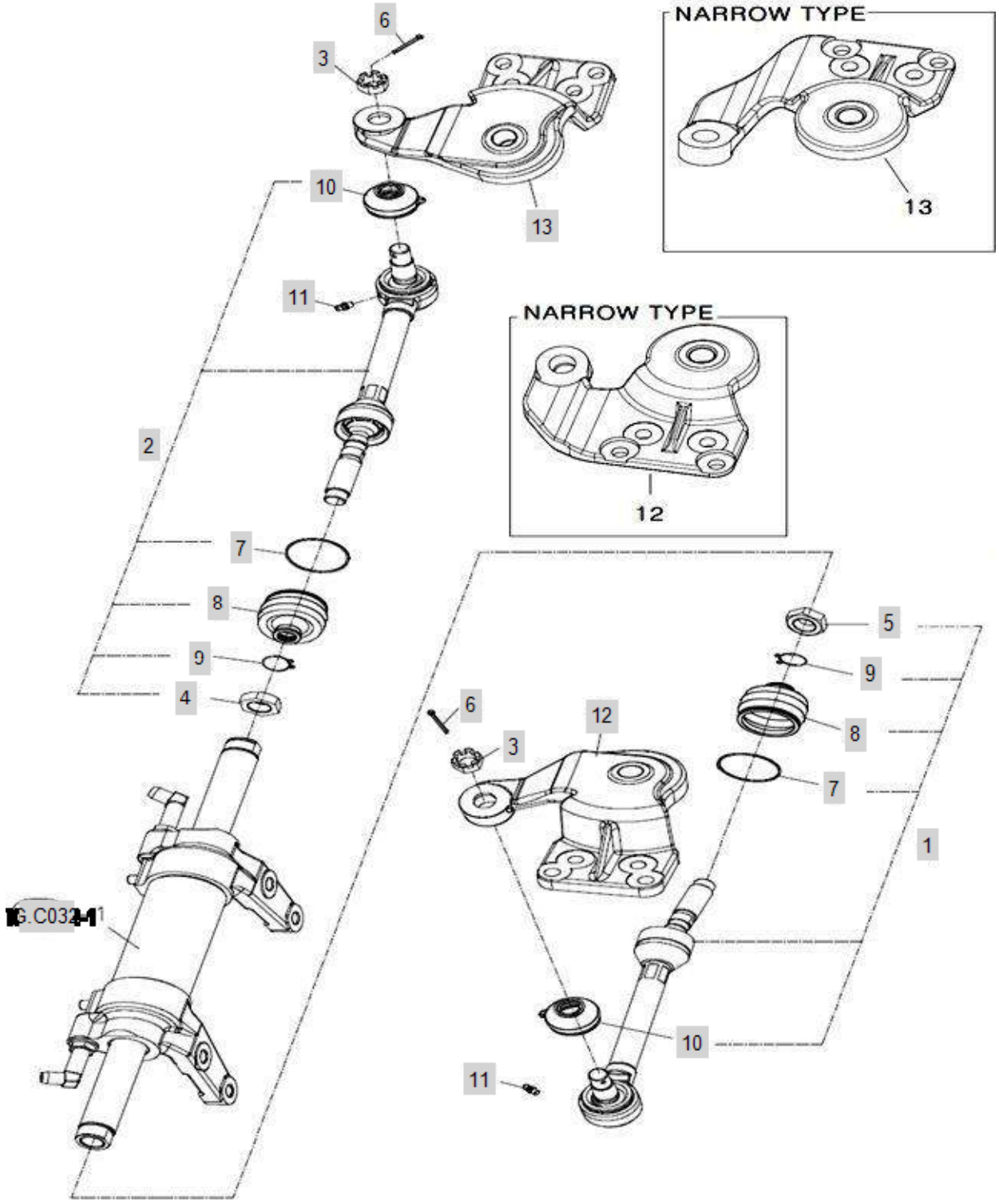

FIG C010 3015H	TIEROAD	Year/Month 2020/01

KeyNo.	Part Number	Part Name	Quantity	Other
1	TC56010000D	TIEROD ASS'Y(LH)	1	
2	TC56020000D	TIEROD ASS'Y(RH)	1	
3	26877-160002	STUDNUTM16	2	
4	TC56040000B4	NUT M20*1.5	1	
5	TC56050000B4	nut	1	
6	22417-300250	PIN , COTTER (3-25)	2	
7	TC56010106A4	SET RING	2	
8	TC56010105A4	DUST COVER	2	
9	TC56010107A4	CLIP	2	
10	TT10030000A9	DUSTCOVER	2	
11	24764-060000	GREASE NIPPLE	2	
12	TA00033465C	kNUCLE ARM (LH)	1	
13	TA00033467E	NUCKLE ARM (RH)	1	
FIG.C032-1	C032		1	

FIG C012 3015H	RING GEAR, DRIVEN GEAR	Year/Month 2020/01

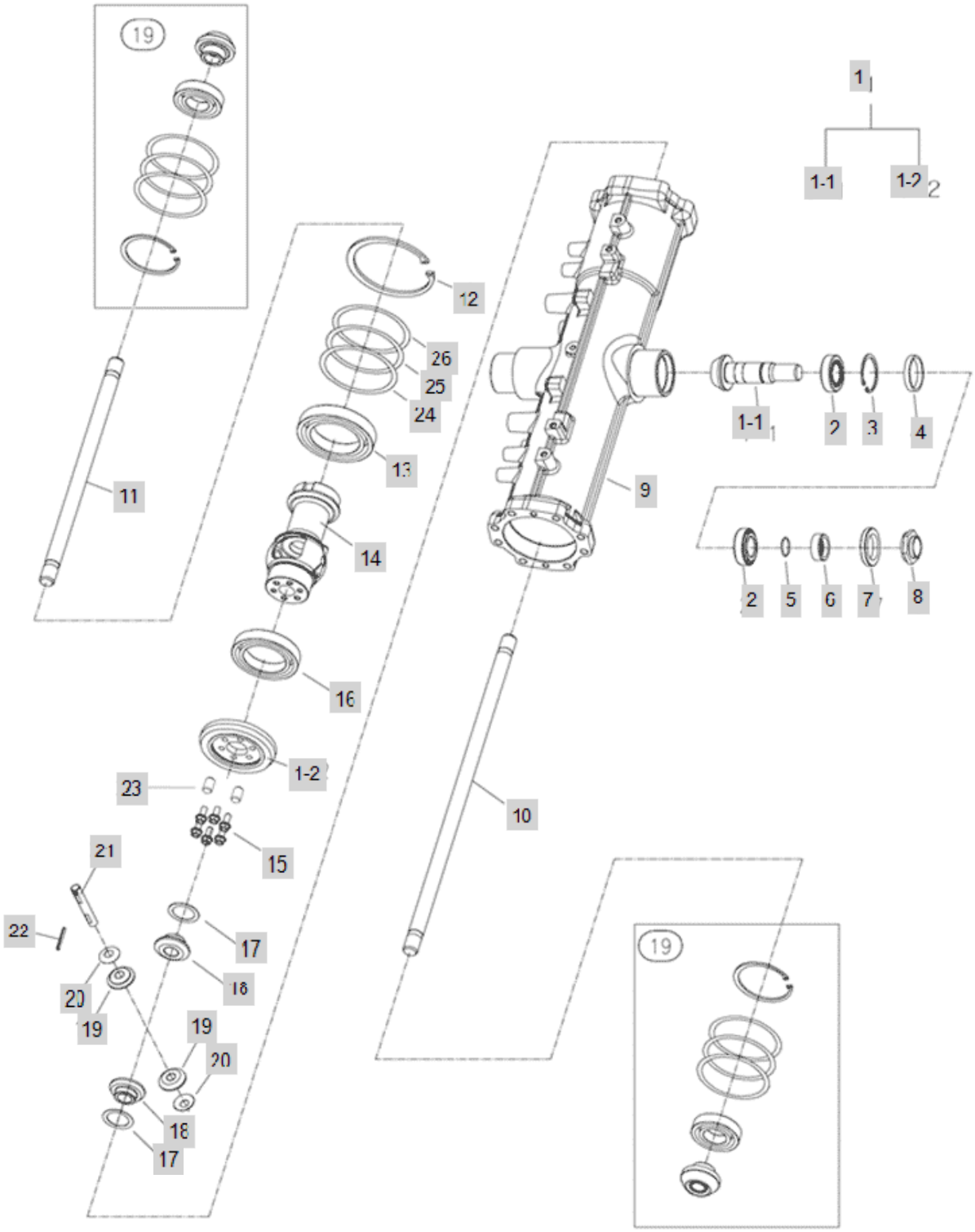

FIG C012 3015H	RING GEAR, DRIVEN GEAR	Year/Month 2020/01

KeyNo.	Part Number	Part Name	Quantity	Other
1	TA00033454C	RING GEAR ASSY	1	
1-1	TA00033455B	COUNT SHAFT	1	
1-2	TA00033456C	RING GEAR	1	
2	24141-320060	BEARING, ROLLER (#32-00-60)	2	
3	22252-000550	RING, CIRCLIP (Φ 55)	1	
4	TA00033478A	SPACER	1	
5	24311-000300	O RING(P TYPE)	1	
6	TA00033471A	BUSH	1	
7	24421-405508	OIL SEAL	1	
8	TA00033472A	NUT	1	
9	TA00033449A	CASE, FRONT AXLE	1	
10	TA00033466A	FRONT 1ST AXLE LH	1	
11	TA00033462A	FRONT 1ST SHAFT RH	1	
12	22252-001100	RING, CIRCLIP (Φ110)	2	
13	24101-060144	BALL BEARING (#6014)	1	
14	TA00033451B	DIFF. CASE	1	
15	TA00054318A	BOLT	6	
16	24101-060134	BALL BEARING (#6013)	2	
17	TC57120000A4	LINER, DIFFERENTIAL GEAR	2	
18	TC57090000A4	GEAR, DIFFERENTIAL 14	2	
19	TC57100000A4	DIFFERENCIAL PINION GEAR 10	2	
20	TC57130000A4	LINER, DIFFERENTIAL PINION	2	
21	TC57110000B4	SHAFT, PINION	1	
22	22351-040040	PIN, SPRING (4-04)	1	
23	22312-080140	PIN, DOWEL (8-14)	2	
24	TA00033482A	SHIM 0.5T	1	
25	TA00033483A	SHIM 0.3T	1	
26	TA00033484A	SHIM 0.2T	1	
FIG.C019	C019-2		2	

FIG C012N-2 3015H	RING GEAR, DRIVEN GEAR	Year/Month 2020/01

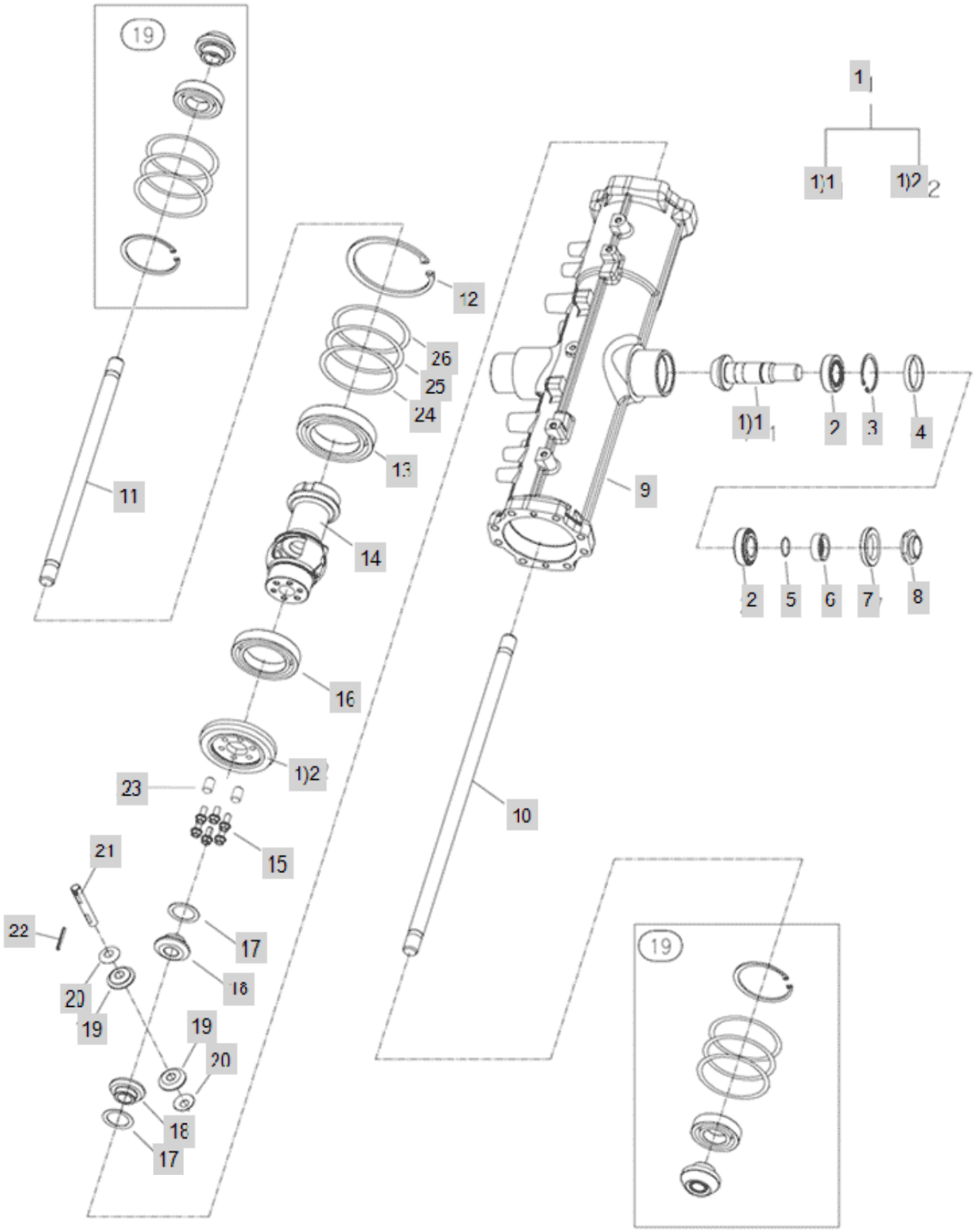

FIG C012N-2 3015H	RING GEAR, DRIVEN GEAR	Year/Month 2020/01

KeyNo.	Part Number	Part Name	Quantity	Other
1	TA00033454C	RING GEAR ASSY	1	
1)1	TA00033455B	COUNT SHAFT	1	
1)2	TA00033456C	RING GEAR	1	
2	24141-320060	BEARING, ROLLER (#32-00-60)	2	
3	22252-000550	RING, CIRCLIP (Φ 55)	1	
4	TA00033478A	SPACER	1	
5	24311-000300	O RING(P TYPE)	1	
6	TA00033471A	BUSH	1	
7	24421-405508	OIL SEAL	1	
8	TA00033472A	NUT	1	
9	TA00041532A	FRONT CASE	1	
10	TA00041539A	SHAFT L, FRONT FIRST	1	
11	TA00041540A	SHAFT R, FRONT FIRST	1	
12	22252-001100	RING, CIRCLIP (Φ110)	2	
13	24101-060144	BALL BEARING (#6014)	1	
14	TA00033451B	DIFF. CASE	1	
15	TA00054318A	BOLT	6	
16	24101-060134	BALL BEARING (#6013)	2	
17	TC57120000A4	LINER, DIFFERENTIAL GEAR	2	
18	TC57090000A4	GEAR, DIFFERENTIAL 14	2	
19	TC57100000A4	DIFFERENCIAL PINION GEAR 10	2	
20	TC57130000A4	LINER, DIFFERENTIAL PINION	2	
21	TC57110000B4	SHAFT, PINION	1	
22	22351-040040	PIN, SPRING (4-04)	1	
23	22312-080140	PIN, DOWEL (8-14)	2	
24	TA00033482A	SHIM 0.5T	1	
25	TA00033483A	SHIM 0.3T	1	
26	TA00033484A	SHIM 0.2T	1	

FIG C019-1 3015H	GEAR CASE, FRONT AXLE	Year/Month 2020/01

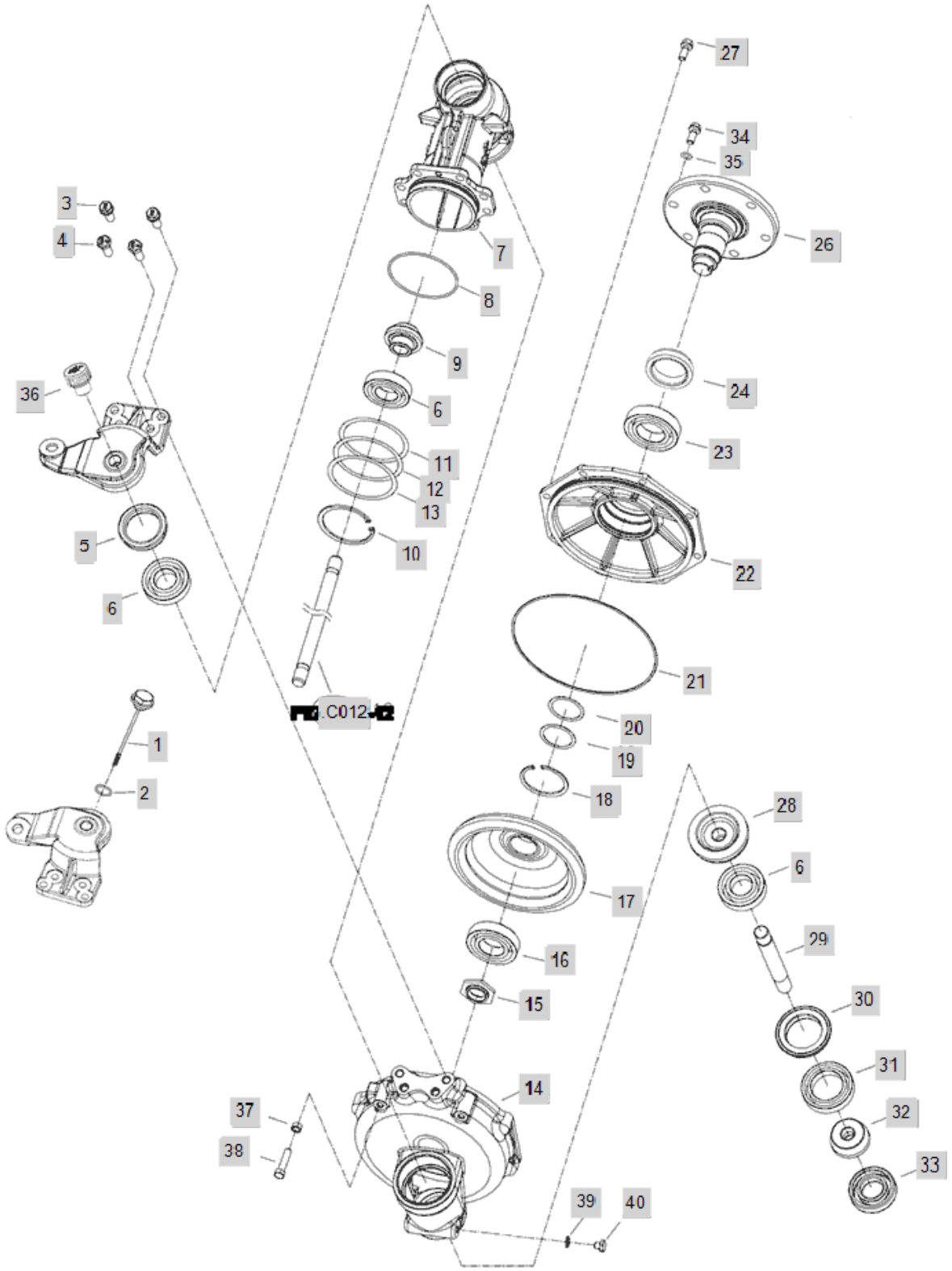

FIG C019-1 3015H	GEAR CASE, FRONT AXLE	Year/Month 2020/01

KeyNo.	Part Number	Part Name	Quantity	Other
1	TA00033805A	OIL GUAGE	1	
2	24311-000180	O-RING, DYNAMIC (Φ18)	2	
3	TA00033468B	BOLT W/ WASHER	4	
4	TA00033475A	RIMER BOLT	4	
5	FE78010000A	SEAL,OIL -> FE78010000B	2	
6	24101-062074	BALL BEARING (#6207)	6	
7	TA00033457B	CASE, FRONT GEAR	2	
8	24321-001050	O-RING	2	
9	TA00033461A	PINION, FRONT 1ST SHAFT	2	
10	22252-000720	RING, CIRCLIP (Φ 72)	2	
11	TA00033489A	SHIM 0.2T	2	
12	TA00033488A	SHIM 0.3T	2	
13	TA00033487A	SHIM 0.5T	2	
14	TA00033458A	GEAR BOX, FRONT	2	
15	TA00033481A	LOCK NUT	2	
16	24101-062084	Bearing, Ball (#6208)	2	
17	TA00033474A	GEAR, BEVEL 49T	2	
18	22252-000850	RING, CIRCLIP (Φ 85)	2	
19	TA00033486A	SHIM 0.2T	1	
20	TA00033485A	SHIM 0.5T	1	
21	TA00033939A	O RING	2	
22	TA00033459A	BEARING CASE, FRONT	1	
23	24101-062094	BALL BEARING (#6209)	2	
24	TA00041352A	OILSEAL (AO26 TYPE)	2	
26	TA00033460A	SPINDLE, FRONT	2	
27	TA00033469A	BOLT W/ WASHER	16	
28	TA00033463A	FRONT 2ND AXLE LH	2	
29	TA00033464A	FRONT 2ND SHAFT	2	
30	TC60110000A3	SEAL	2	
31	24101-060104	Bearing, Ball (#6010)	2	
32	TA00033473A	GEAR, BEVEL 11T	2	
33	TC60340000A4	BEARING(TM207C3)	2	
34	TD23120000A4US	SUB TO-> TD23120000A4	12	
35	22217-140000	WASHER, SPRING (Φ 14)	12	
36	TC60790000B3	CAP(M20),OIL	1	
37	26716-100001	NUT	1	
38	26116-100452	BOLT	1	
39	22190-100000	WASHER	2	
40	23887-100002	SCREW,HEXAGONHEADCAP	2	
FIG.C012-12	C012		1	

FIG C019-2 3015H	GEAR CASE, FRONT AXLE	Year/Month 2020/01

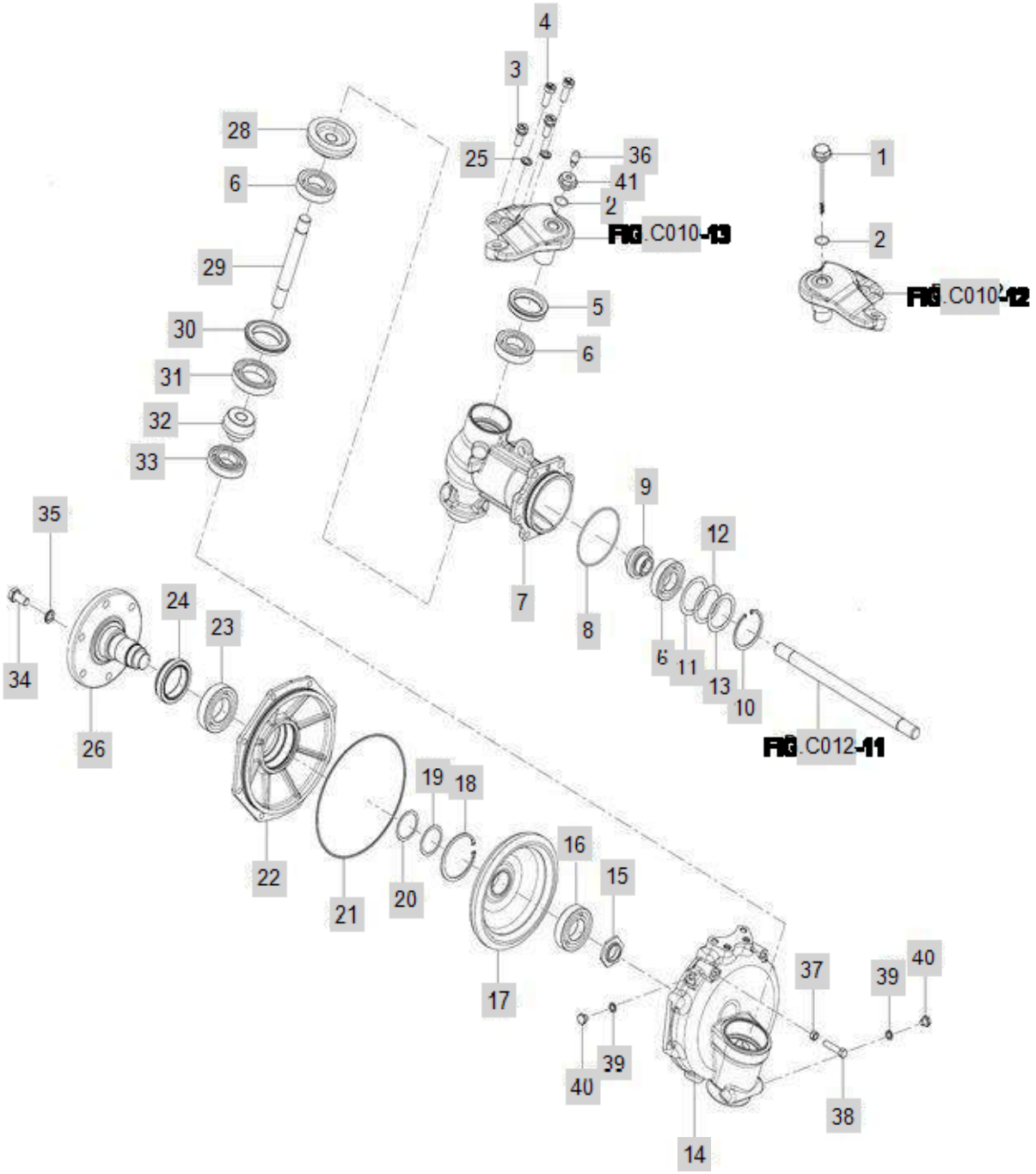

FIG C019-2 3015H	GEAR CASE, FRONT AXLE	Year/Month 2020/01

KeyNo.	Part Number	Part Name	Quantity	Other
1	TA00033805A	OIL GUAGE	1	
2	24311-000220	O-RING, DYNAMIC (Φ22)	2	
3	TA00033468B	BOLT W/ WASHER	4	
4	TA00033475A	RIMER BOLT	4	
5	FE78010000A	SEAL,OIL -> FE78010000B	2	
6	24101-062074	BALL BEARING (#6207)	6	
7	TA00033457A	CASE, FRONT GEAR	2	
8	24321-001050	O-RING	2	
9	TA00033461A	PINION, FRONT 1ST SHAFT	2	
10	22252-000720	RING, CIRCLIP (Φ 72)	2	
11	TA00033489A	SHIM 0.2T	2	
12	TA00033488A	SHIM 0.3T	2	
13	TA00033487A	SHIM 0.5T	2	
14	TA00033458A	GEAR BOX, FRONT	2	
15	TA00033481A	LOCK NUT	2	
16	24101-062084	Bearing, Ball (#6208)	2	
17	TA00033474A	GEAR, BEVEL 49T	2	
18	22252-000850	RING, CIRCLIP (Φ 85)	2	
19	TA00033486A	SHIM 0.2T	1	
20	TA00033485A	SHIM 0.5T	1	
21	TA00033939A	O RING	2	
22	TA00033459A	BEARING CASE, FRONT	1	
23	24101-062094	BALL BEARING (#6209)	2	
24	TA00041359A	OILSEAL	2	
25	22217-120000	WASHER, SPRING (Φ 12)	2	
26	TA00033460A	SPINDLE, FRONT	2	
27	TA00033469A	BOLT W/ WASHER	16	
28	TA00033463A	FRONT 2ND AXLE LH	2	
29	TA00033464A	FRONT 2ND SHAFT	2	
30	TC60110000A3	SEAL	2	
31	24101-060104	Bearing, Ball (#6010)	2	
32	TA00033473A	GEAR, BEVEL 11T	2	
33	TC60340000A4	BEARING(TM207C3)	2	
34	TD23120000A4	BOLT	12	
35	TB29430000A4	WASHER	12	
36	TA00049842A	AIR BREATHER	1	
37	26716-100002	Nut, Hexa (Φ10)	2	
38	26116-100452	BOLT	2	
39	22190-100000	WASHER	4	
40	23887-100002	SCREW,HEXAGONHEADCAP	4	
41	TA00049843A	ADAPTHER	1	
FIG.C010-12	C010		1	
FIG.C010-13	C010		1	
FIG.C012-11	C012		1	

FIG C019-3 3015H	GEAR CASE, FRONT AXLE	Year/Month 2020/01

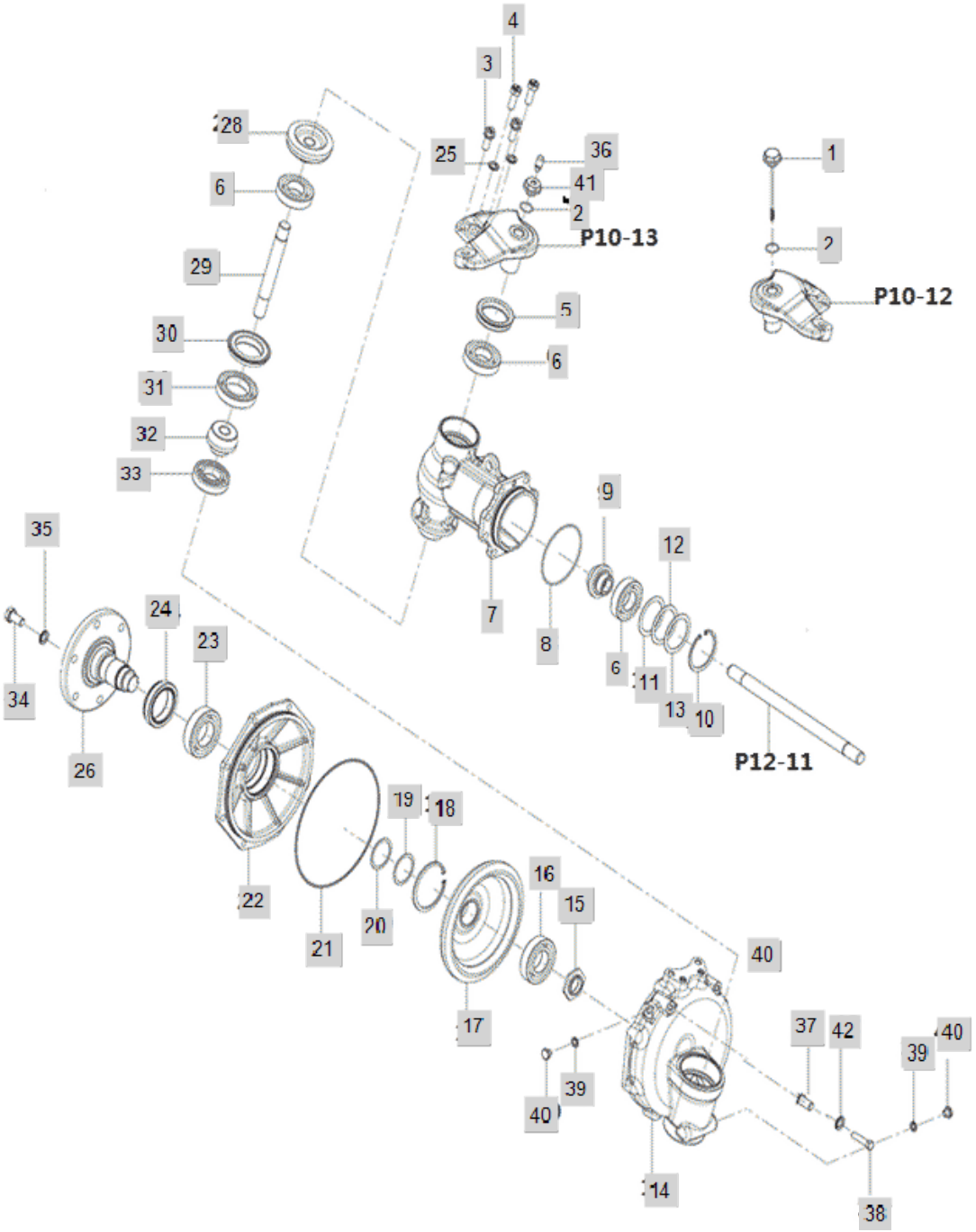

FIG C019-3 3015H	GEAR CASE, FRONT AXLE	Year/Month 2020/01

KeyNo.	Part Number	Part Name	Quantity	Other
1	TA00033805A	OIL GUAGE	1	
2	24311-000220	O-RING, DYNAMIC (Φ22)	2	
3	TA00033468B	BOLT W/ WASHER	4	
4	TA00033475A	RIMER BOLT	4	
5	FE78010000A	SEAL,OIL -> FE78010000B	2	
6	24101-062074	BALL BEARING (#6207)	6	
7	TA00033457A	CASE, FRONT GEAR	2	
8	24321-001050	O-RING	2	
9	TA00033461A	PINION, FRONT 1ST SHAFT	2	
10	22252-000720	RING, CIRCLIP (Φ 72)	2	
11	TA00033489A	SHIM 0.2T	2	
12	TA00033488A	SHIM 0.3T	2	
13	TA00033487A	SHIM 0.5T	2	
14	TA00033458A	GEAR BOX, FRONT	2	
15	TA00033481A	LOCK NUT	2	
16	24101-062084	Bearing, Ball (#6208)	2	
17	TA00033474A	GEAR, BEVEL 49T	2	
18	22252-000850	RING, CIRCLIP (Φ 85)	2	
19	TA00033486A	SHIM 0.2T	1	
20	TA00033485A	SHIM 0.5T	1	
21	TA00033939A	O RING	2	
22	TA00033459A	BEARING CASE, FRONT	1	
23	24101-062094	BALL BEARING (#6209)	2	
24	TA00041359A	OILSEAL	2	
25	22217-120000	WASHER, SPRING (Φ 12)	2	
26	TA00033460A	SPINDLE, FRONT	2	
27	TA00033469A	BOLT W/ WASHER	16	
28	TA00033463A	FRONT 2ND AXLE LH	2	
29	TA00033464A	FRONT 2ND SHAFT	2	
30	TC60110000A3	SEAL	2	
31	24101-060104	Bearing, Ball (#6010)	2	
32	TA00033473A	GEAR, BEVEL 11T	2	
33	TC60340000A4	BEARING(TM207C3)	2	
34	TD23120000A4	BOLT	12	
35	22217-140000	WASHER, SPRING (Φ 14)	12	
36	TA00049842A	AIR BREATHER	1	
37	TA00058614A	STOPER	2	
38	26112-100502		2	
39	22190-100000	WASHER	4	
40	23887-100002	SCREW,HEXAGONHEADCAP	4	
41	TA00049843A	ADAPTHER	1	
42	22217-100000	WASHER, SPRING (Φ 10)	2	

FIG C019-3N 3015H	GEAR CASE, FRONT AXLE	Year/Month 2020/01

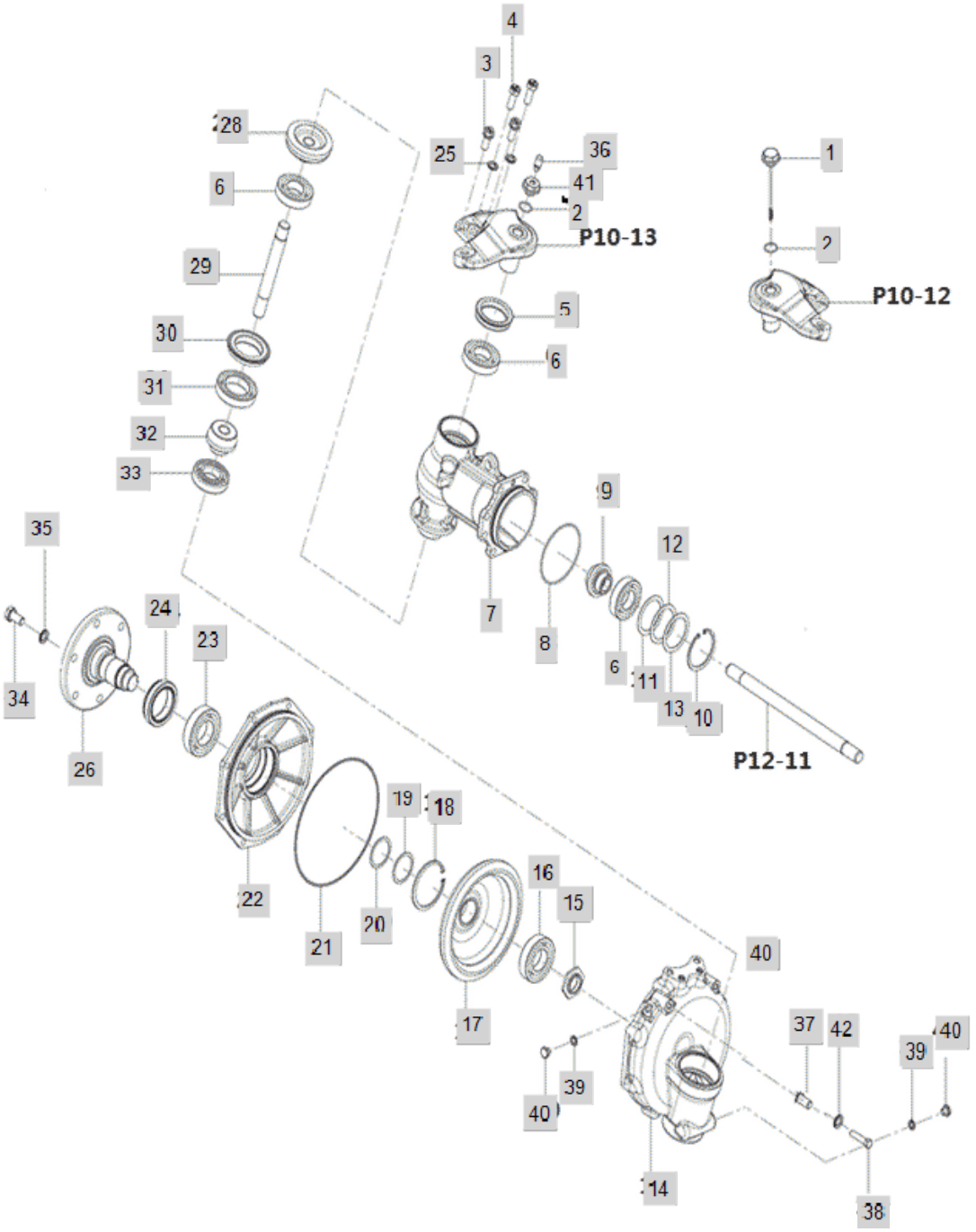

FIG C019-3N 3015H	GEAR CASE, FRONT AXLE	Year/Month 2020/01

KeyNo.	Part Number	Part Name	Quantity	Other
1	TA00041646A	DIP STICK	1	
2	24311-000220	O-RING, DYNAMIC (Φ22)	2	
3	TA00033468B	BOLT W/ WASHER	4	
4	TA00033475A	RIMER BOLT	4	
5	FE78010000A	SEAL,OIL -> FE78010000B	2	
6	24101-062074	BALL BEARING (#6207)	6	
7	TA00041533B	FRONT GEAR CASE L	2	
8	24321-001050	O-RING	2	
9	TA00033461A	PINION, FRONT 1ST SHAFT	2	
10	22252-000720	RING, CIRCLIP (Φ 72)	2	
11	TA00033489A	SHIM 0.2T	2	
12	TA00033488A	SHIM 0.3T	2	
13	TA00033487A	SHIM 0.5T	2	
14	TA00033458A	GEAR BOX, FRONT	2	
15	TA00033481A	LOCK NUT	2	
16	24101-062084	Bearing, Ball (#6208)	2	
17	TA00033474A	GEAR, BEVEL 49T	2	
18	22252-000850	RING, CIRCLIP (Φ 85)	2	
19	TA00033486A	SHIM 0.2T	1	
20	TA00033485A	SHIM 0.5T	1	
21	TA00033939A	O RING	2	
22	TA00033459A	BEARING CASE, FRONT	1	
23	24101-062094	BALL BEARING (#6209)	2	
24	TA00041359A	OILSEAL	2	
25	22217-120000	WASHER, SPRING (Φ 12)	2	
26	TA00033460A	SPINDLE, FRONT	2	
27	TA00033469A	BOLT W/ WASHER	16	
28	TA00033463A	FRONT 2ND AXLE LH	2	
29	TA00033464A	FRONT 2ND SHAFT	2	
30	TC60110000A3	SEAL	2	
31	24101-060104	Bearing, Ball (#6010)	2	
32	TA00033473A	GEAR, BEVEL 11T	2	
33	TC60340000A4	BEARING(TM207C3)	2	
34	TD23120000A4	BOLT	12	
35	22217-140000	WASHER, SPRING (Φ 14)	12	
36	TA00049842A	AIR BREATHER	1	
37	TA00058614A	STOPER	2	
38	26112-100502		2	
39	22190-100000	WASHER	4	
40	23887-100002	SCREW,HEXAGONHEADCAP	4	
41	TA00049843A	ADAPTHER	1	
42	22217-100000	WASHER, SPRING (Φ 10)	2	

FIG C020 3015H	SPACER	Year/Month 2020/01

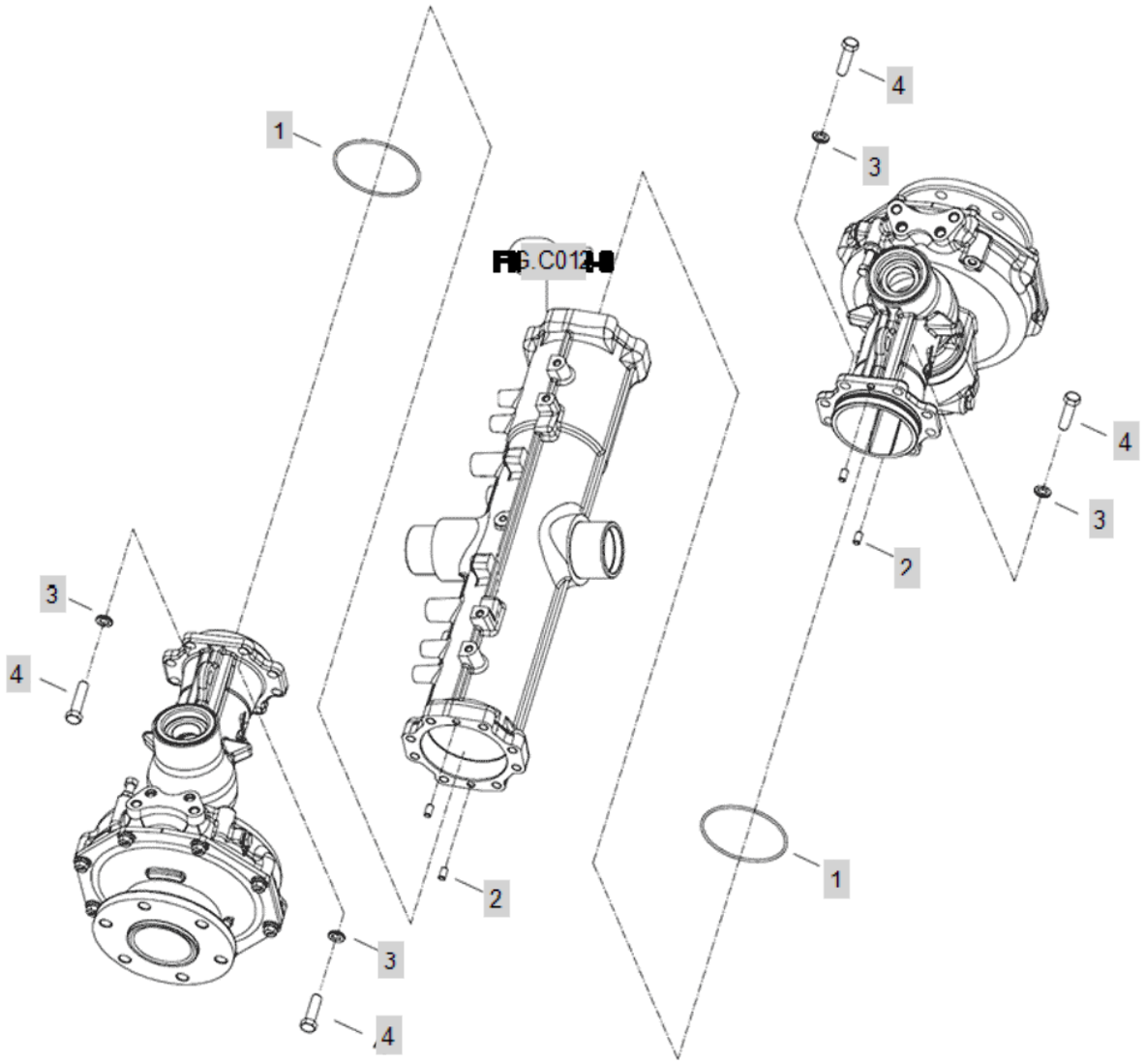

FIG C020 3015H	SPACER	Year/Month 2020/01

KeyNo.	Part Number	Part Name	Quantity	Other
1	24321-001050	O-RING	2	
2	22312-080140	PIN, DOWEL (8-14)	8	
3	22217-120000	WASHER, SPRING (Φ 12)	16	
4	TC60400000A4	BOLT	16	
4-1	TA00033470A	BOLT	16	
FIG.C012-8	C012		1	

FIG C032 3015H	P.S.T CYLINDER	Year/Month 2020/01

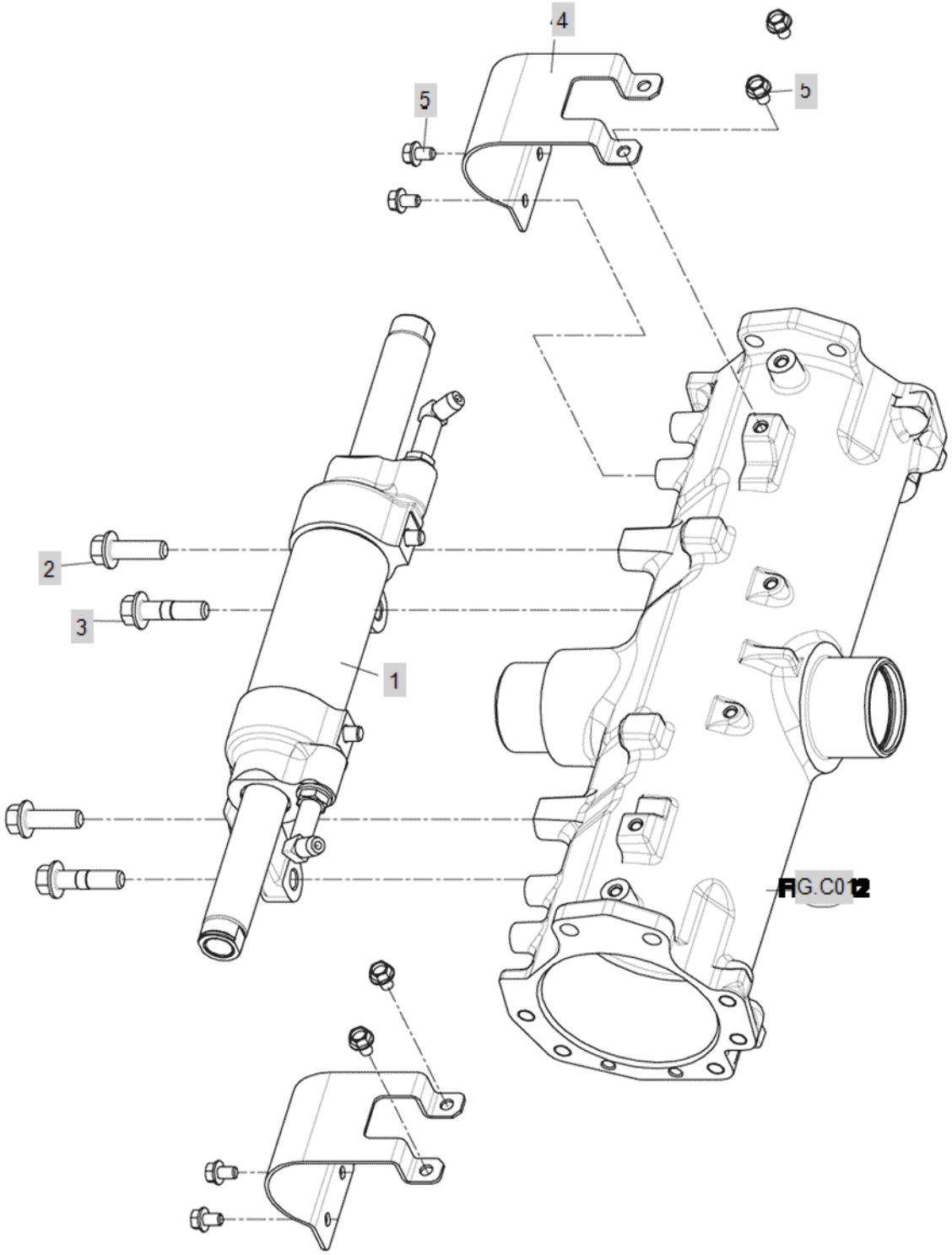

FIG C032 3015H	P.S.T CYLINDER	Year/Month 2020/01

KeyNo.	Part Number	Part Name	Quantity	Other
1	TC66030000C2	STEERING CYLINDER ASSY	1	
2	TC66010000A4	SCREW FLANGE	2	
3	TC66020000A4	REAMER BOLT M12x46	2	
4	TA00000834A	PST CYLINDER COVER	2	
5	26106-080122	Bolt, Hexa (8-12)	8	
FIG.C012	C012		1	

FIG C034-1 3015H	P.S.T HOSE(2017.01)	Year/Month 2020/01

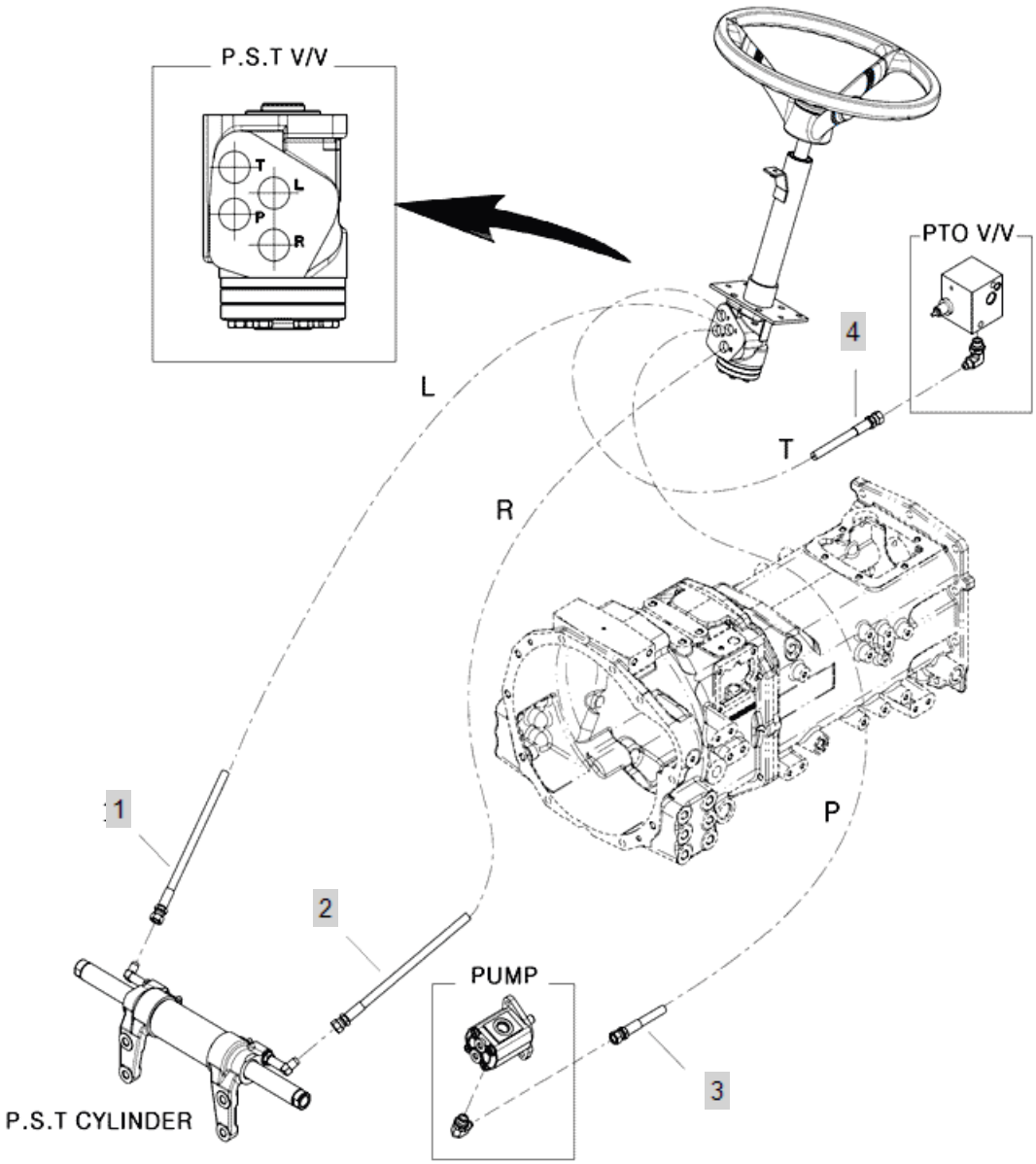

FIG C034-1 3015H	P.S.T HOSE(2017.01)	Year/Month 2020/01

KeyNo.	Part Number	Part Name	Quantity	Other
1	TA00015708B	HOSE, POWER STEERING	1	
2	TA00041384A	HOSE, PST(R)	1	
3	TA00039979C	HOSE(1/4)	1	
4	TA00043716A	HOSE	1	

FIG C034-2 3015H	P.S.T HOSE	Year/Month 2020/01

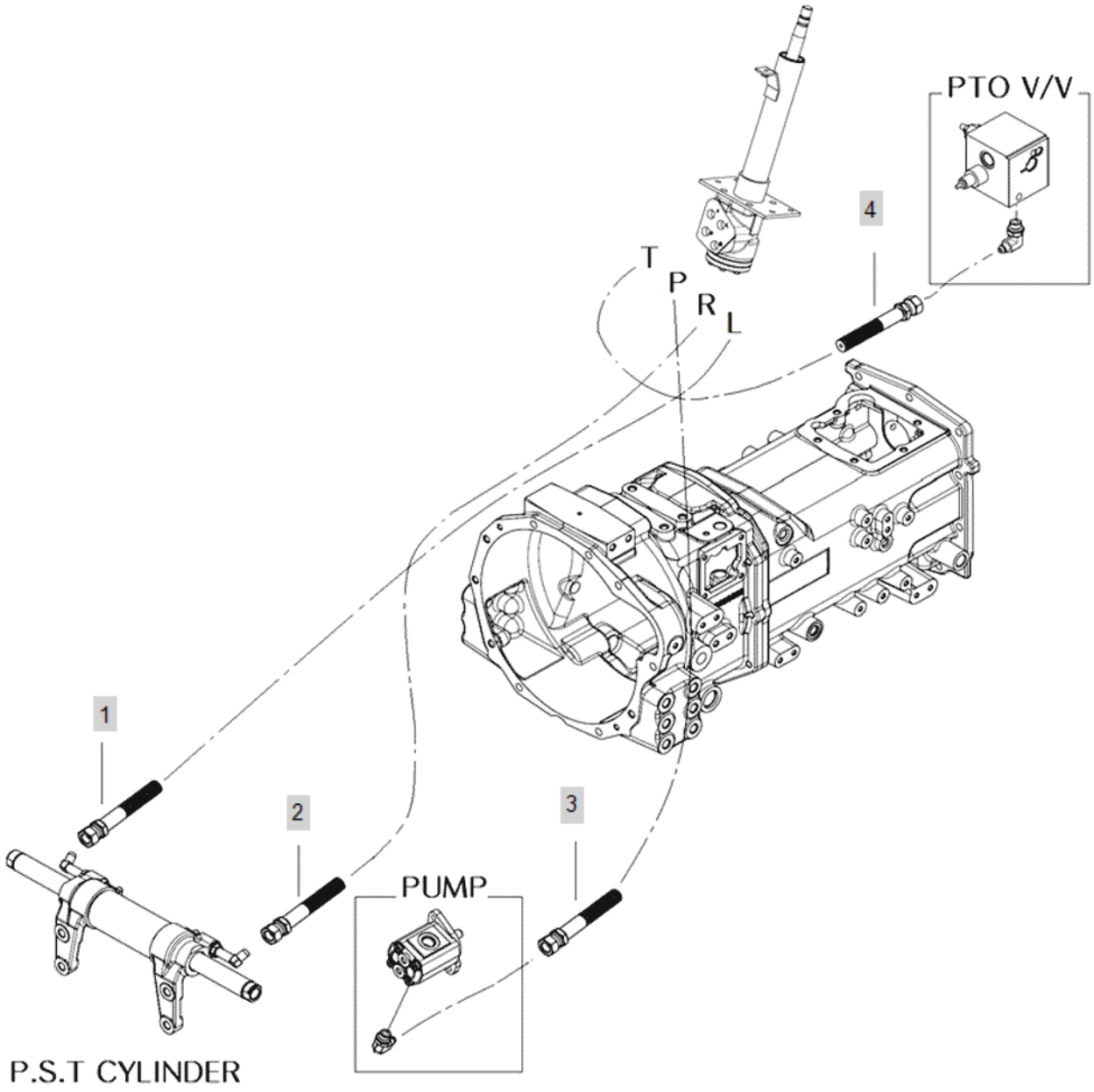

FIG C034-2 3015H	P.S.T HOSE	Year/Month 2020/01

KeyNo.	Part Number	Part Name	Quantity	Other
1	TA00015708B	HOSE, POWER STEERING	1	
2	TA00041384A	HOSE, PST(R)	1	
3	TA00039979C	HOSE(1/4)	1	
4	TA00043716A	HOSE	1	

FIG C037A-1 3015H	CLUTCH HOUSING	Year/Month 2020/01

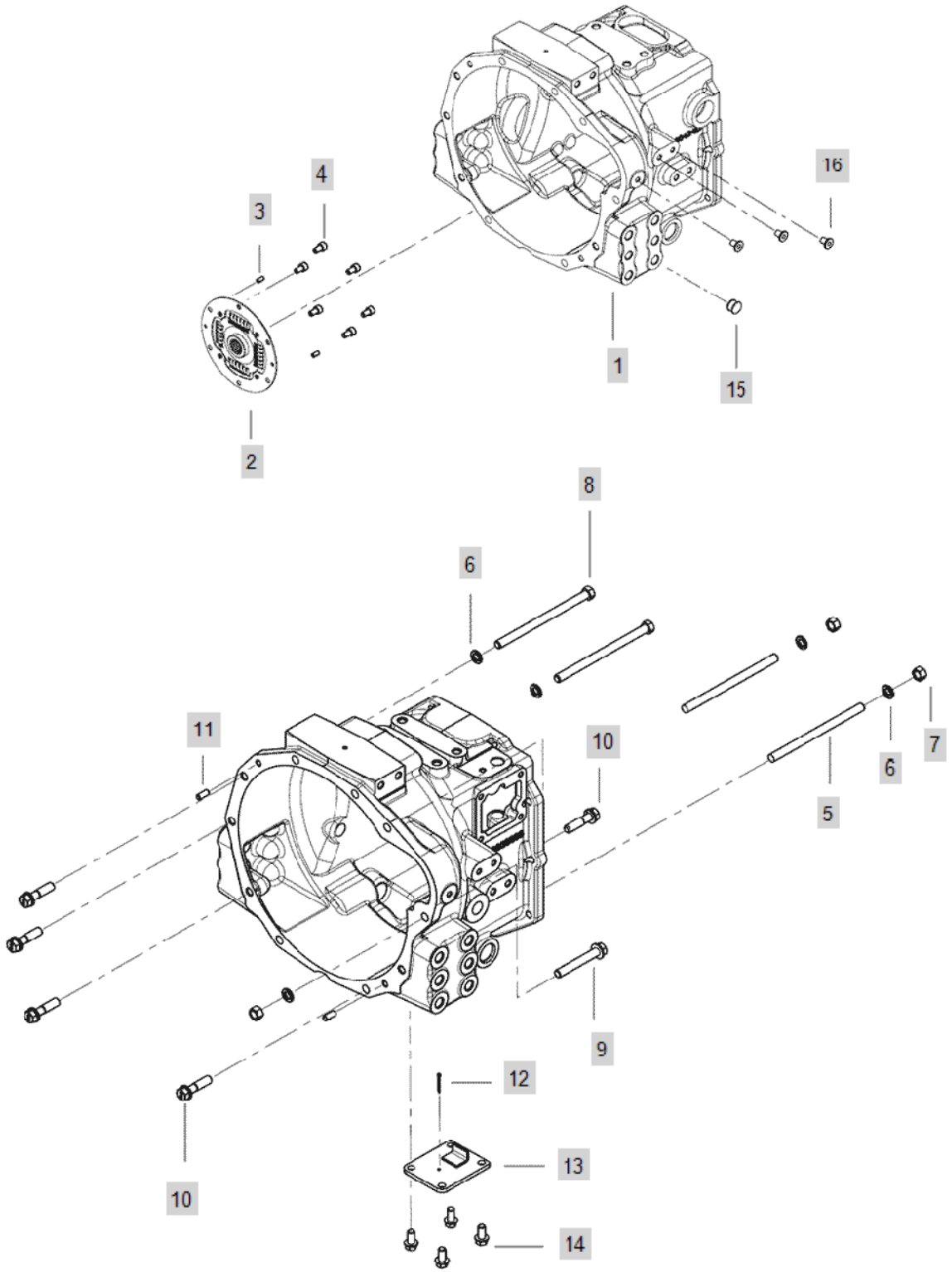

FIG C037A-1 3015H	CLUTCH HOUSING	Year/Month 2020/01

KeyNo.	Part Number	Part Name	Quantity	Other
1	TA00042413A	CLUTCH HOUSING	1	
2	NT38100000A3	PTO DAMPER	1	
3	22351-060016	PIN, SPRING (6-16)	2	
4	26450-080142	BOLT	6	
5	TA00040214B	BOLT	2	
6	22217-120000	WASHER, SPRING (Φ 12)	5	
7	26716-120002	BOLT,CYLINDER HEAD(B)	3	
8	TA00040213A	HEX BOLT	2	
9	TA00040292A	HEX BOLT	1	
10	FB36330000A4	Hex Bolt With Washer	5	
11	22312-080180	PIN, DOWEL (8-18)	2	
12	22417-300250	PIN , COTTER (3-25)	1	
13	TA00038610A	COVER, CLUTCH HOUSING	1	
14	26106-100202	HEX BOLT, (10-20)	4	
15	TA00055258A	PLUG(14)	12	
15-1	TTD4300000A4	PLUG15	8	
15-2	FB08090000A4	PLUG	12	
16	TB26060000A4	PLUGRUBBER	3	

FIG C037A-2 3015H	CLUTCH HOUSING(2019.04~)	Year/Month 2020/01

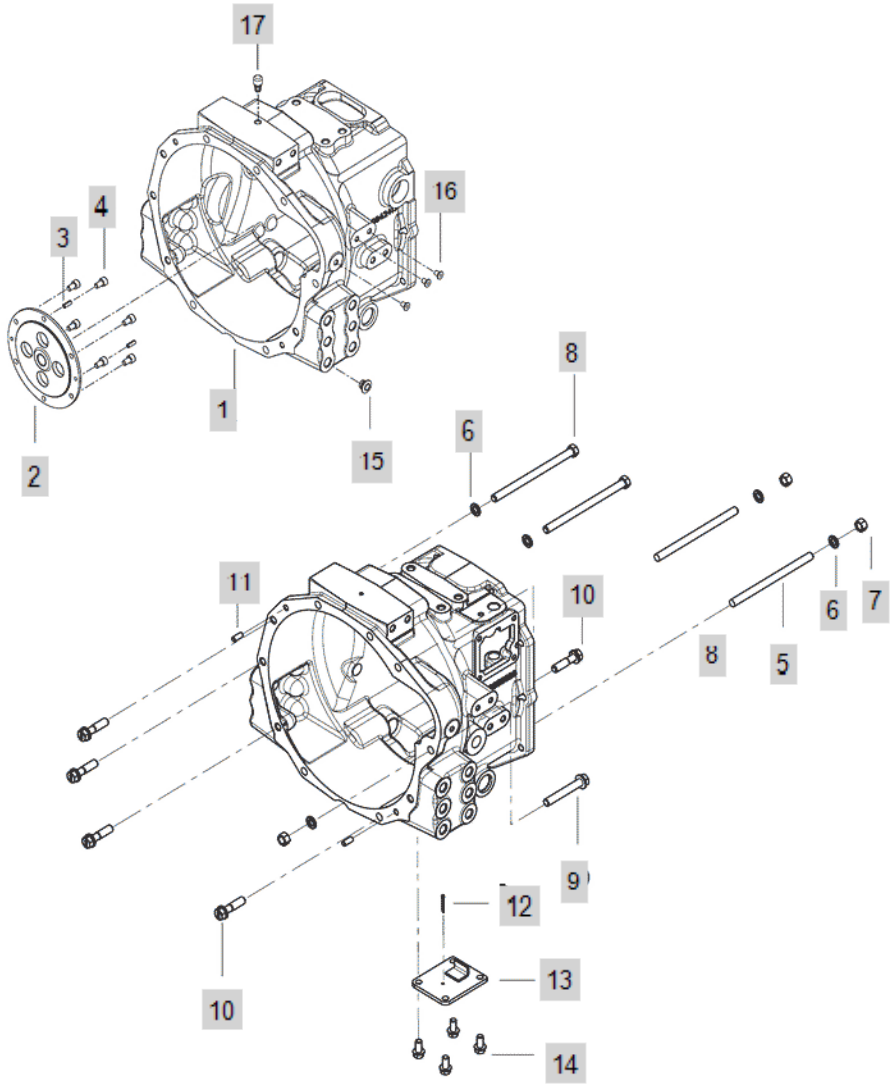

FIG C037A-2 3015H	CLUTCH HOUSING(2019.04~)	Year/Month 2020/01

KeyNo.	Part Number	Part Name	Quantity	Other
1	TA00042413A	CLUTCH HOUSING	1	
2	TA00038871E	SLEEVE	1	
3	22351-060016	PIN, SPRING (6-16)	2	
4	26450-080142	BOLT	6	
5	TA00040214B	BOLT	2	
6	22217-120000	WASHER, SPRING (Φ 12)	5	
7	26716-120002	BOLT,CYLINDER HEAD(B)	3	
8	TA00040213A	HEX BOLT	2	
9	TA00040292A	HEX BOLT	1	
10	FB36330000A4	Hex Bolt With Washer	5	
11	22312-080180	PIN, DOWEL (8-18)	2	
12	22417-300250	PIN , COTTER (3-25)	1	
13	TA00038610A	COVER, CLUTCH HOUSING	1	
14	26106-100202	HEX BOLT, (10-20)	4	
15	TA00055258A	PLUG(14)	12	
16	TB26060000A4	PLUGRUBBER	3	
17	TA00034078A	AIR BREATHER	1	

FIG C038-1 3015H	PUMP, HST	Year/Month 2020/01

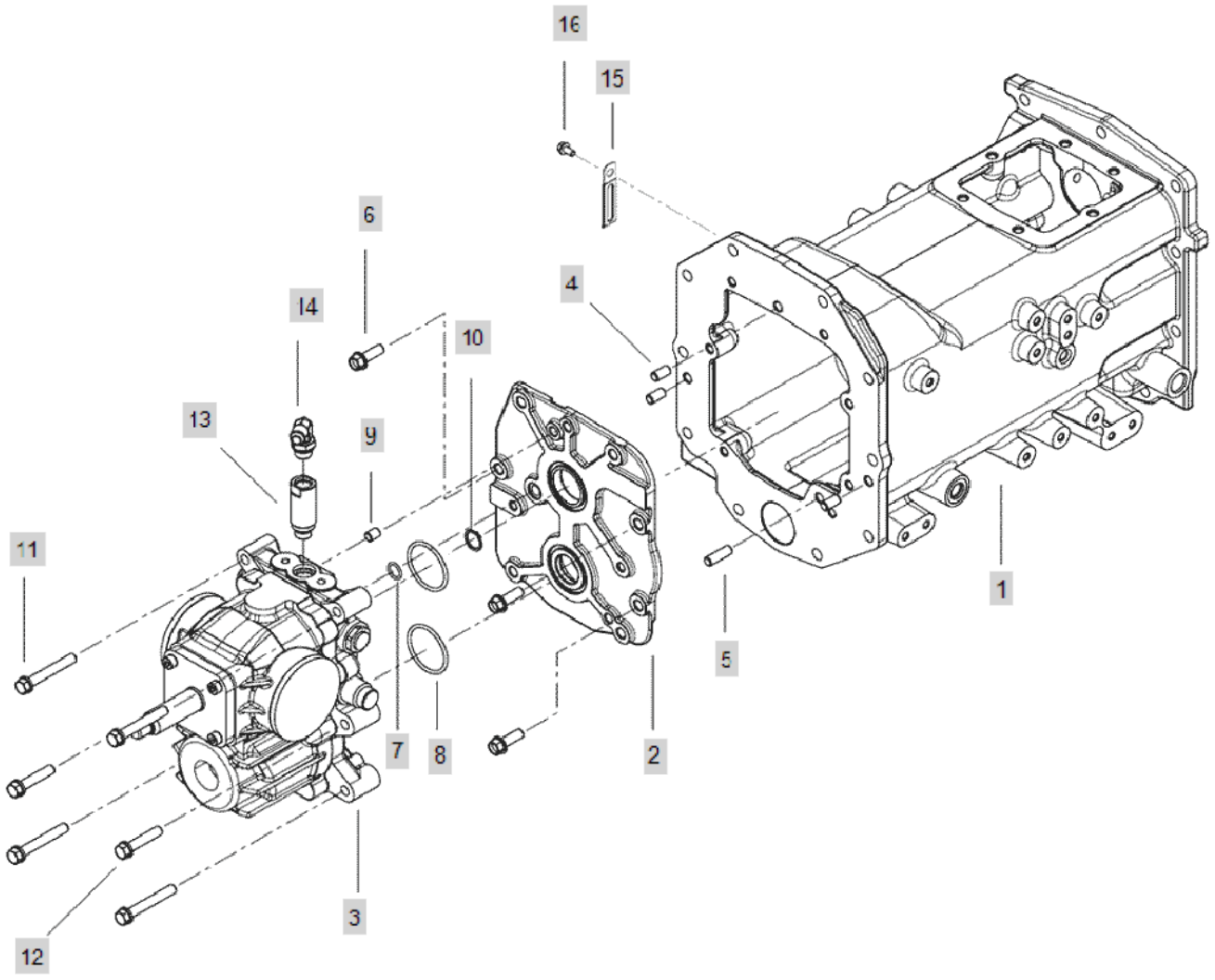

FIG C038-1 3015H	PUMP, HST	Year/Month 2020/01

KeyNo.	Part Number	Part Name	Quantity	Other
1	TA00042272A	CASE, MISSION	1	
2	TA00042425A	PLATE	1	
3	TA00042201A	HST(28CC)	1	
4	22312-100180	PIN, DOWEL (10-18)	3	
5	22312-100300	PARALLEL PINS	1	
6	26106-100302	HEXFLANGEBOLT	3	
7	24311-000150	O-RING, DYNAMIC (Φ15)	1	
8	24311-000500	O-RING, DYNAMIC (Φ50)	2	
9	22312-100120	PIN, DOWEL (10-12)	1	
10	22242-000200	SNAP RING, SHAFT (Φ 20)	1	
11	26013-100702	HEX BOLT W/WASHER	4	
12	26013-100502	BOLT,W/SW	2	
13	TA00042781A	ADAPTOR(3/8)	1	
14	CEE4050000A4	ELBOW (3/8)	1	
15	TT80180000A4	Clamp, B	1	
16	26106-080162	SCREW,HEXFLANGEHEADCAP	1	

FIG C044-1 3015H	TRANSMISSION CASE	Year/Month 2020/01

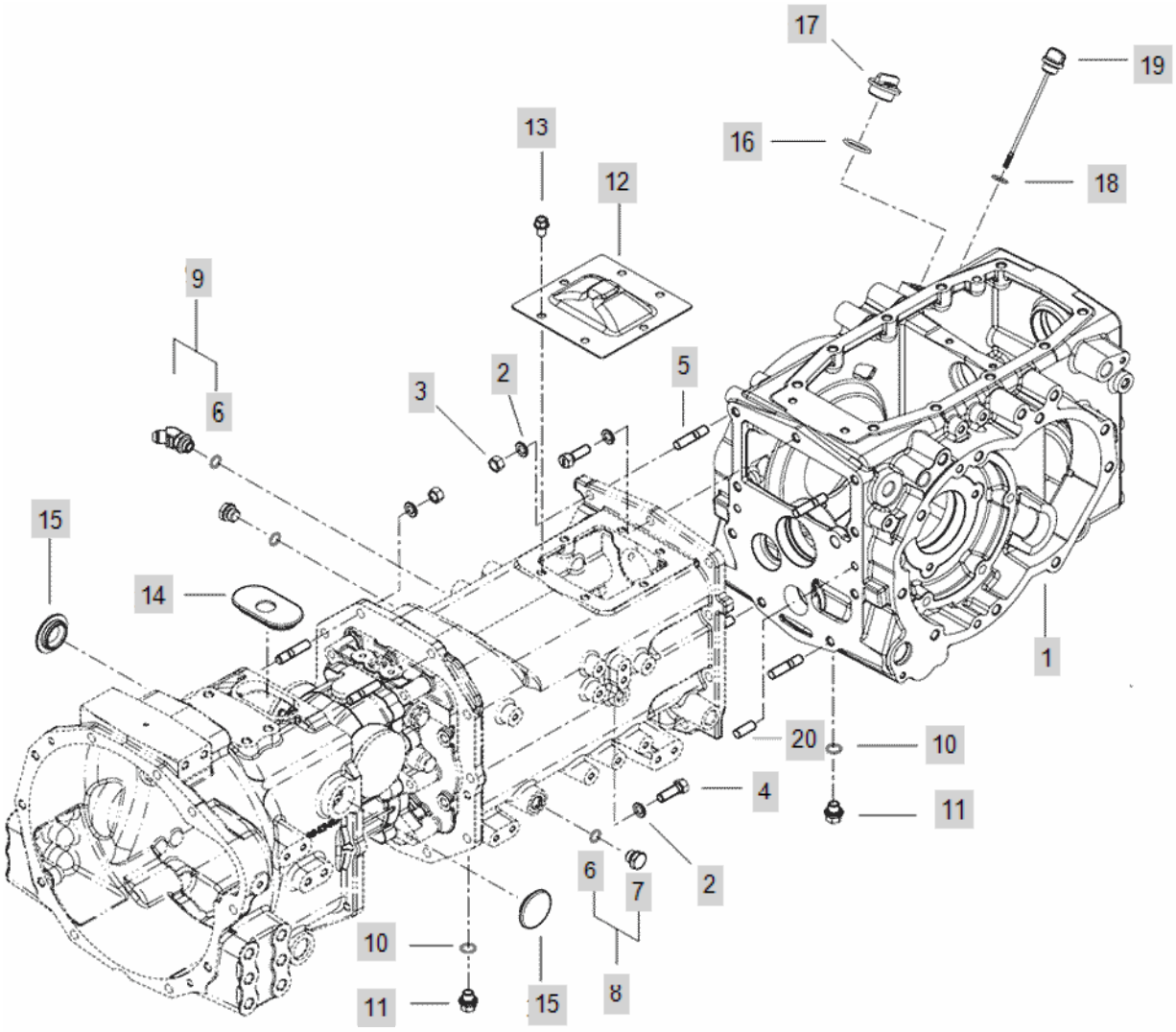

FIG C044-1 3015H	TRANSMISSION CASE	Year/Month 2020/01

KeyNo.	Part Number	Part Name	Quantity	Other
1	TA00043199A	REAR AXLE CASE	1	
2	22217-120000	WASHER, SPRING (Φ 12)	19	
3	26716-120002	BOLT,CYLINDER HEAD(B)	6	
4	TH22090000A4	BOLT (M12 P1.75X35)	13	
5	FT80120000A4	StudBolt(12X38)	6	
6	24311-000140	O-RING, DYNAMIC (Φ14)	3	
7	NTA1130100A9		2	
8	NTA1130000A4	PLUG	2	
9	FT33060000A4	45ELBOW[3/8]	1	
10	24311-000160	O-RING, DYNAMIC (Φ16)	2	
11	TB28120000C	PLUG	2	
12	TA00042422A	COVER	1	
13	26106-100162	SCREW,HEXFLANGEHEADCAP	6	
14	TA00043328A	COVER, RUBBER	1	
15	TA00042481A	PLUG,RUBBER	2	
16	24311-000320	O-RING, DYNAMIC (Φ32)	1	
17	HC03470000B	OIL SUPPLY INLET	1	
18	24311-000180	O-RING, DYNAMIC (Φ18)	1	
19	TA00038076A	LOD	1	
20	22312-100180	PIN, DOWEL (10-18)	2	

FIG C044-2 3015H	TRANSMISSION CASE	Year/Month 2020/01

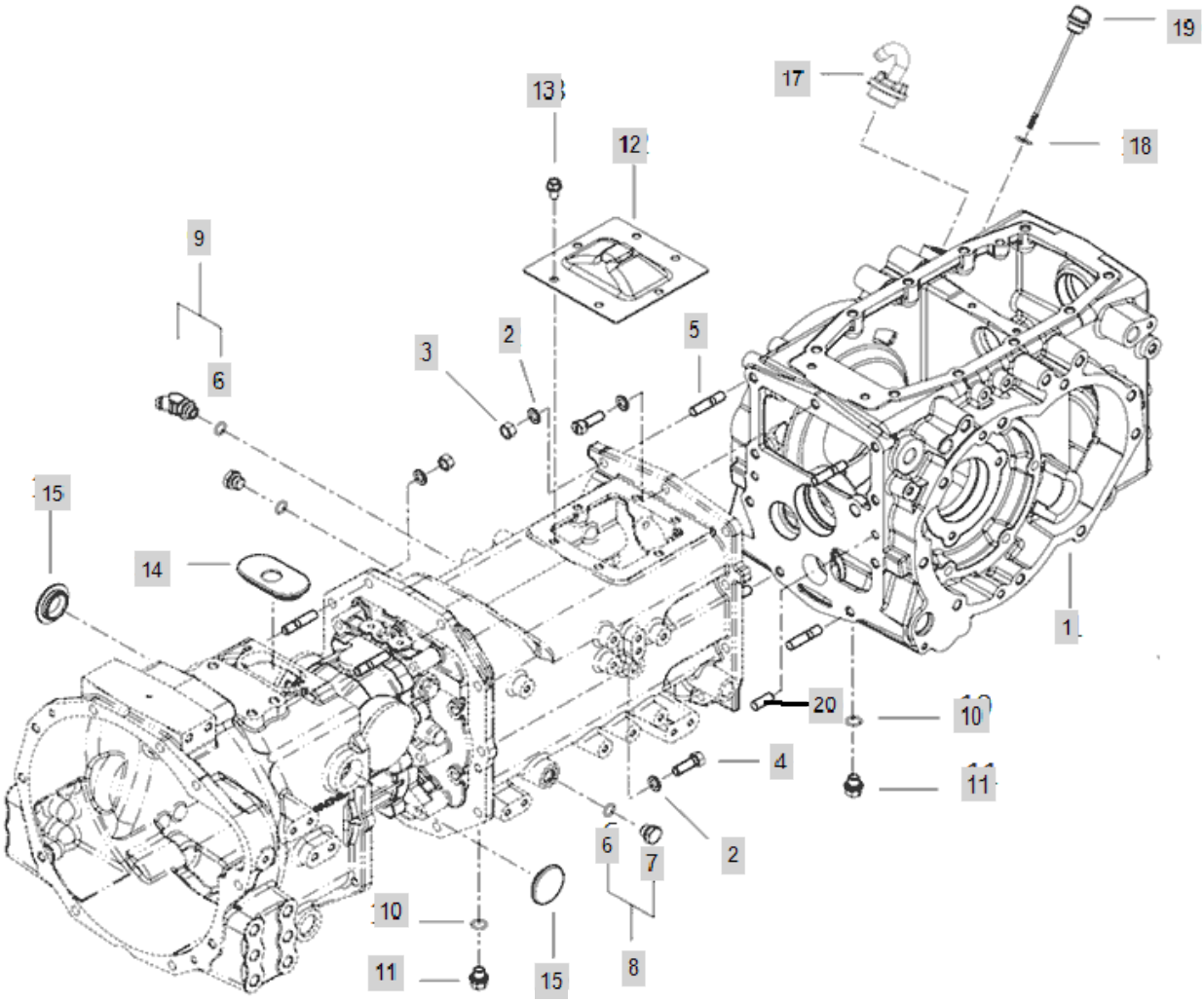

FIG C044-2 3015H	TRANSMISSION CASE	Year/Month 2020/01

KeyNo.	Part Number	Part Name	Quantity	Other
1	TA00043199C	REAR AXLE CASE	1	
2	22217-120000	WASHER, SPRING (Φ 12)	19	
3	26716-120002	BOLT,CYLINDER HEAD(B)	6	
4	TH22090000A4	BOLT (M12 P1.75X35)	13	
5	FT80120000A4	StudBolt(12X38)	6	
6	24311-000140	O-RING, DYNAMIC (Φ14)	3	
7	NTA1130100A9		2	
8	NTA1130000A4	PLUG	2	
9	FT33060000A4	45ELBOW[3/8]	1	
10	24311-000160	O-RING, DYNAMIC (Φ16)	2	
11	TB28120000C4	DRAIN PLUG	2	
12	TA00042422A	COVER	1	
13	26106-100162	SCREW,HEXFLANGEHEADCAP	6	
14	TA00043328A	COVER, RUBBER	1	
15	TA00042481A	PLUG,RUBBER	2	
17	FT80370000A4	CAP,INTAKE	1	
18	24311-000180	O-RING, DYNAMIC (Φ18)	1	
19	TA00038076A	LOD	1	
20	22312-100180	PIN, DOWEL (10-18)	2	

FIG C044-3 3015H	TRANSMISSION CASE(2018.04~)	Year/Month 2020/01

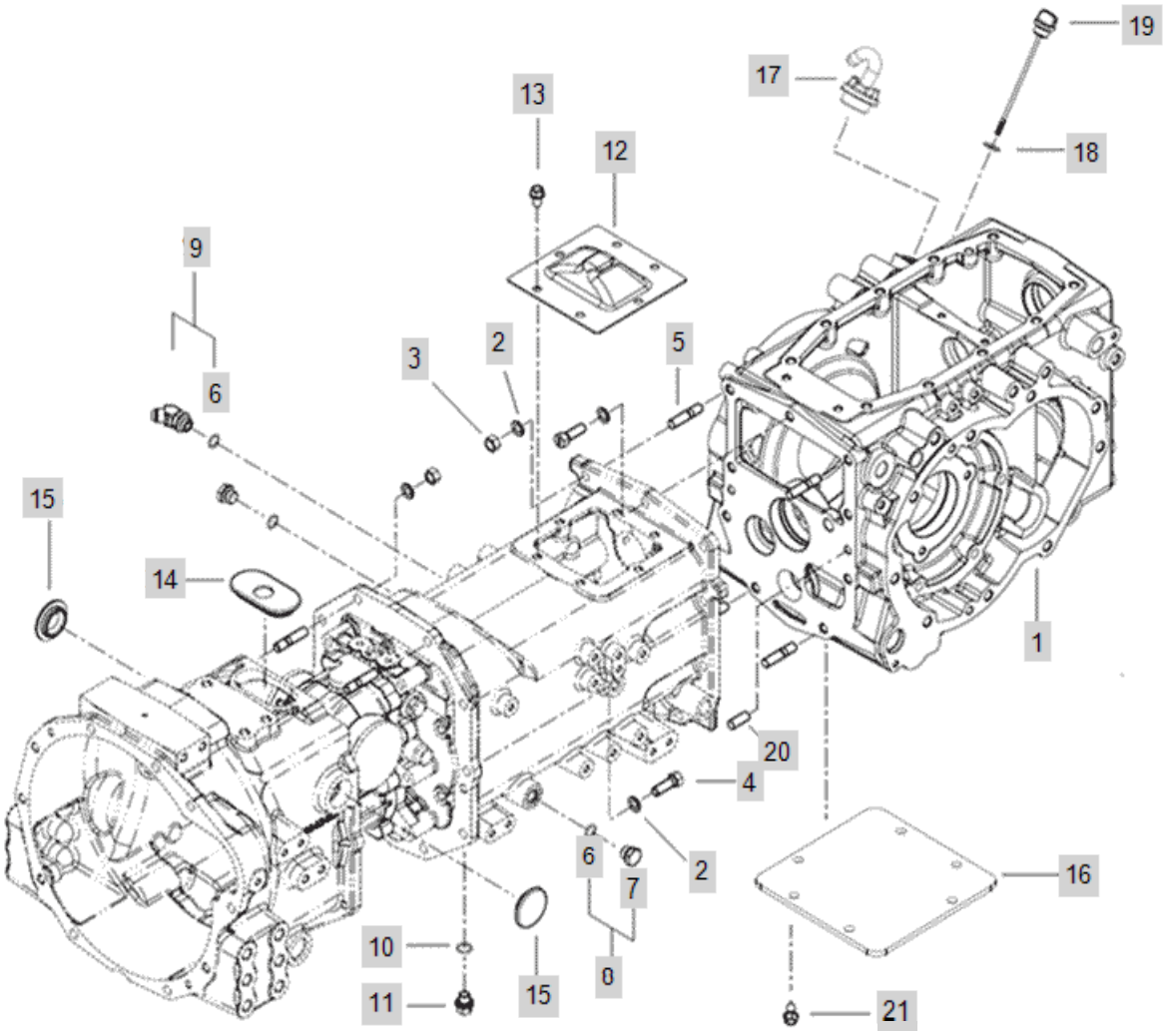

FIG C044-3 3015H	TRANSMISSION CASE(2018.04~)	Year/Month 2020/01

KeyNo.	Part Number	Part Name	Quantity	Other
1	TA00043199D	REAR AXLE CASE	1	
2	22217-120000	WASHER, SPRING (Φ 12)	19	
3	26716-120002	BOLT,CYLINDER HEAD(B)	6	
4	TH22090000A4	BOLT (M12 P1.75X35)	13	
5	FT80120000A4	StudBolt(12X38)	6	
6	24311-000140	O-RING, DYNAMIC (Φ14)	3	
7	NTA1130100A9		2	
8	NTA1130000A4	PLUG	2	
9	FT33060000A4	45ELBOW[3/8]	1	
10	24311-000160	O-RING, DYNAMIC (Φ16)	2	
11	TB28120000C4	DRAIN PLUG	2	
12	TA00042422A	COVER	1	
13	26106-100162	SCREW,HEXFLANGEHEADCAP	6	
14	TA00043328A	COVER, RUBBER	1	
15	TA00042481A	PLUG,RUBBER	2	
16	TA00054742A	COVER, MID PTO	1	
17	FT80370000A4	CAP,INTAKE	1	
18	24311-000180	O-RING, DYNAMIC (Φ18)	1	
19	TA00038076A	LOD	1	
20	22312-100180	PIN, DOWEL (10-18)	2	
21	26106-100202	HEX BOLT, (10-20)	6	

FIG C044-4 3015H	TRANSMISSION CASE(2018.04~)	Year/Month 2020/01

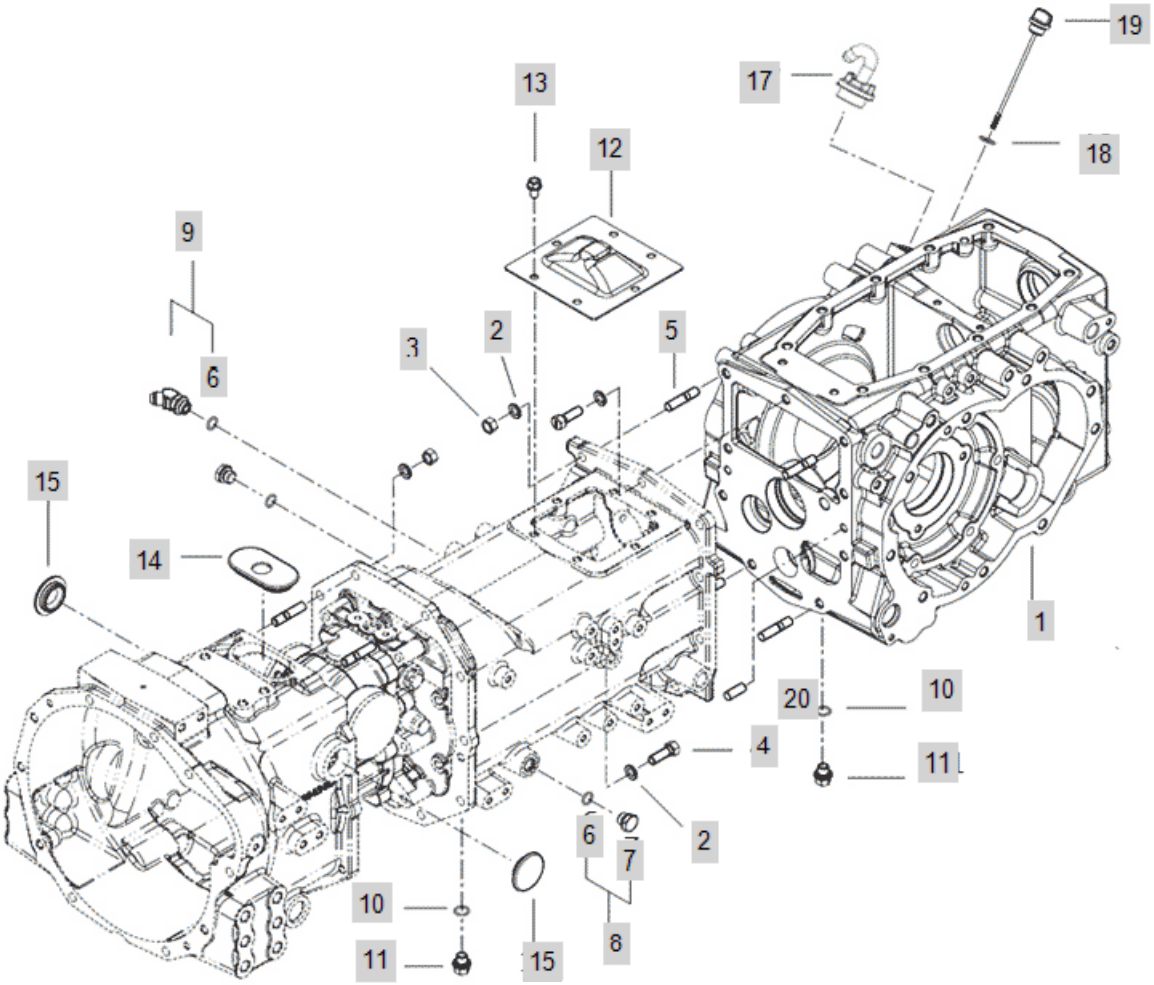

FIG C044-4 3015H	TRANSMISSION CASE(2018.04~)	Year/Month 2020/01

KeyNo.	Part Number	Part Name	Quantity	Other
1	TA00043199D	REAR AXLE CASE	1	
2	22217-120000	WASHER, SPRING (Φ 12)	19	
3	26716-120002	BOLT,CYLINDER HEAD(B)	6	
4	TH22090000A4	BOLT (M12 P1.75X35)	13	
5	FT80120000A4	StudBolt(12X38)	6	
6	24311-000140	O-RING, DYNAMIC (Φ14)	3	
7	NTA1130100A9		2	
8	NTA1130000A4	PLUG	2	
9	FT33060000A4	45ELBOW[3/8]	1	
10	24311-000160	O-RING, DYNAMIC (Φ16)	2	
11	TB28120000C4	DRAIN PLUG	2	
12	TA00042422A	COVER	1	
13	26106-100162	SCREW,HEXFLANGEHEADCAP	6	
14	TA00043328A	COVER, RUBBER	1	
15	TA00042481A	PLUG,RUBBER	2	
17	FT80370000A4	CAP,INTAKE	1	
18	24311-000180	O-RING, DYNAMIC (Φ18)	1	
19	TA00038076A	LOD	1	
20	22312-100180	PIN, DOWEL (10-18)	2	

FIG C057A 3015H	GEAR, RANGE SHIFT	Year/Month 2020/01

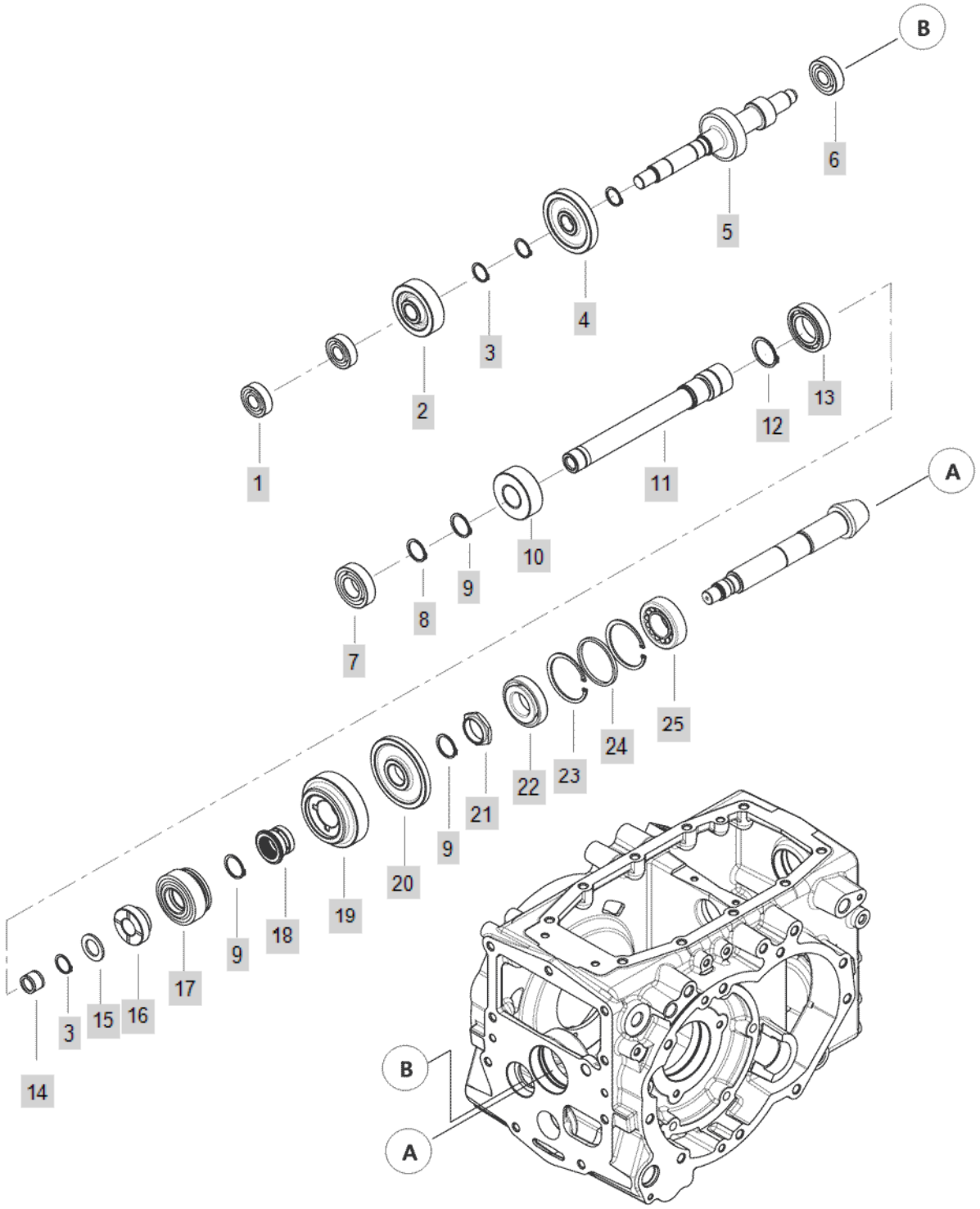

FIG C057A 3015H	GEAR, RANGE SHIFT	Year/Month 2020/01

KeyNo.	Part Number	Part Name	Quantity	Other
1	24101-062044	Bearing, Ball (#6204)	2	
2	TA00042210A	RANGE DRIVEN GEAR	1	
3	22242-000250	SNAP RING, SHAFT (Φ 25)	4	
4	TA00042633A	GEAR,RANGE C	1	
5	TA00042209A	RANGE DRIVE SHAFT	1	
6	24101-063044	BALL BEARING	1	
7	24101-062064	BALL BEARING (#6206)	1	
8	22242-000300	SNAP RING, SHAFT (Φ 30)	1	
9	22242-000320	SNAP RING, SHAFT (Φ 32)	3	
10	TA00042211A	RANGE DRIVE GEAR	1	
11	TA00042189A	RANGE SHAFT	1	
12	22242-000400	SNAP RING, SHAFT (Φ 40)	1	
13	TA00038427A	BEARING	1	
14	24161-202620	NIDDLE BEARING	1	
15	TA00042652A	COLLAR	1	
16	TA00042638A	GEAR, RANGE C DRIVEN	1	
17	TA00038536B	GEAR, RANGE DRIVEN 2	1	
18	TA00038539C	SLEEVE	1	
19	TA00038571C	GEAR, RANGE DRIVEN 1	1	
20	TA00038573C	GEAR, 4WD DRIVE	1	
21	TA00038802A	LOCK NUT	1	
22	24142-302070	TAPER ROLLER BEARING	1	
23	22252-000720	RING, CIRCLIP (Φ 72)	2	
24	TA00038583A	SPACER	1	
25	TA00038582A	TAPER ROLLER BEARING	1	

FIG C062 3015H	MAIN P.T.O SHAFT	Year/Month 2020/01

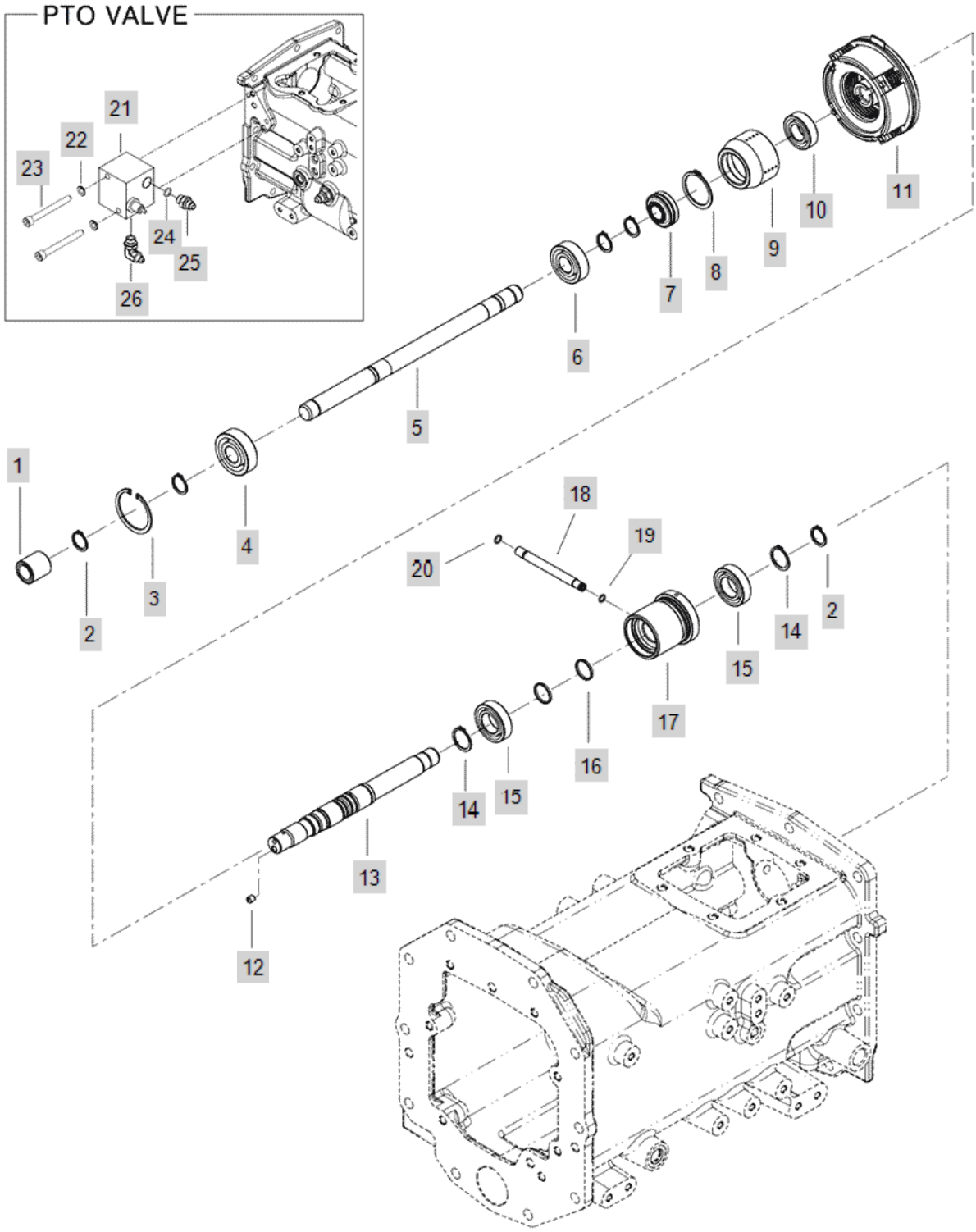

FIG C062 3015H	MAIN P.T.O SHAFT	Year/Month 2020/01

KeyNo.	Part Number	Part Name	Quantity	Other
1	TA00038269A	JOINT	1	
2	22242-000200	SNAP RING, SHAFT (Φ 20)	5	
3	22252-000520	RING, CIRCLIP (Φ 52)	1	
4	24101-063044	BALL BEARING	1	
5	TA00042213A	MAIN PTO SHAFT	1	
6	24101-062044	Bearing, Ball (#6204)	1	
7	TA00038282A	JOINT	1	
8	22242-000400	SNAP RING, SHAFT (Φ 40)	1	
9	TA00038284A	HUB, PTO CLUTCH	1	
10	24101-060044	Bearing, Ball (#6004)	1	
11	TA00038773B	PTO CLUTCH PACK	1	
12	TT64080000A4	RETAININGSCREWM7X1	1	
13	TA00038289A	SHAFT, PTO DRIVE	1	
14	22242-000250	SNAP RING, SHAFT (Φ 25)	2	
15	24101-060054	BALL BEARING (#6005)	2	
16	TA00038288A	SEALING	2	
17	TA00038287B	SLEEVE	1	
18	TA00038286C	PIPE	1	
19	24341-000070	O-RING, FIX (Φ7)	1	
20	24341-000080	O-RING	1	
21	TA00041661A	PTO VALVE	1	
22	22217-100000	WASHER, SPRING (Φ 10)	2	
23	26450-101002	BOLT	2	
24	24311-000140	O-RING, DYNAMIC (Φ14)	1	
25	TTA3880000A4	Adapt, Connect PF3/8	1	
26	NT34620000A4	ELBOW	1	

FIG C063-1 3015H	PTO DRIVE SHAFT	Year/Month 2020/01

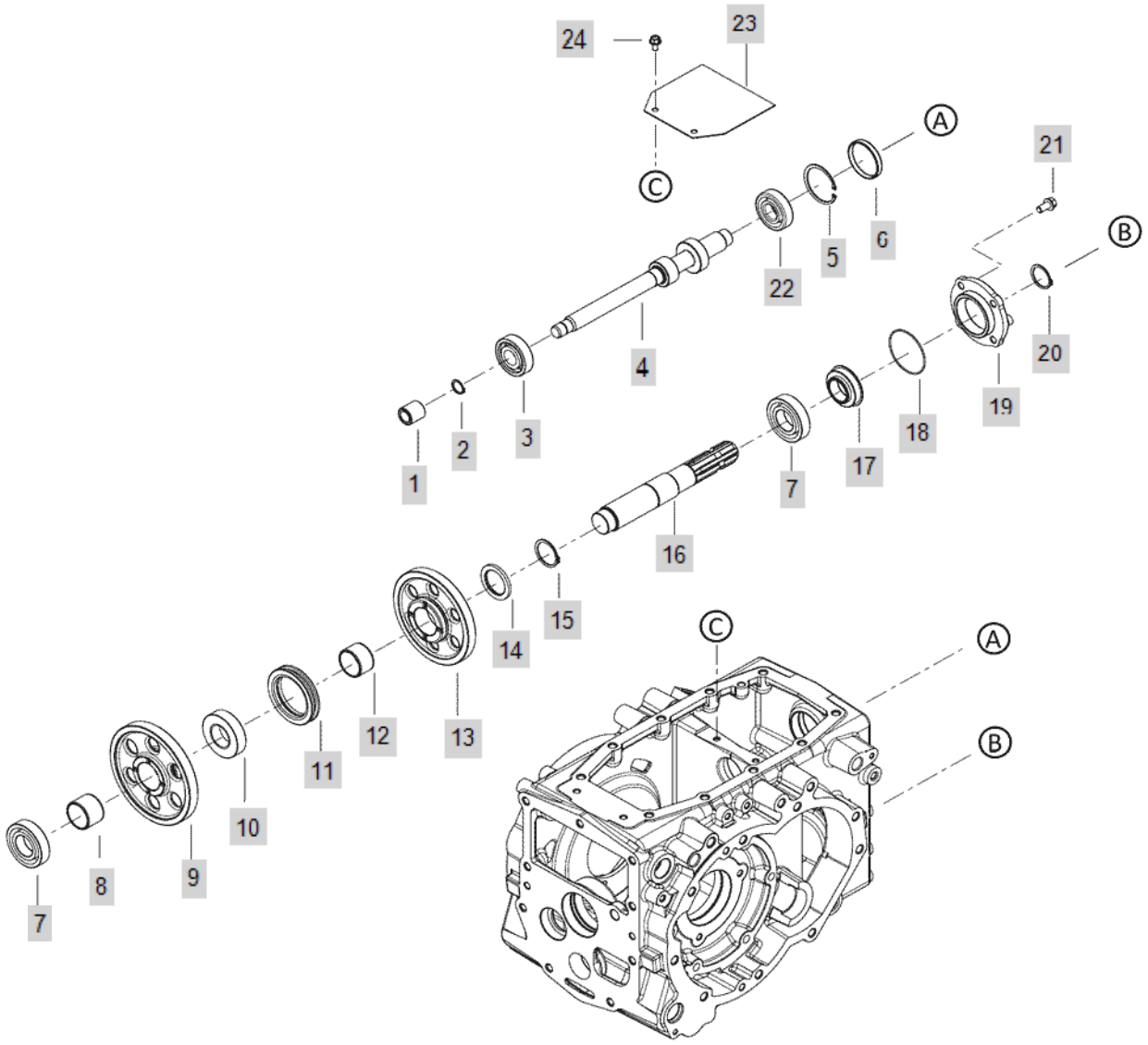

FIG C063-1 3015H	PTO DRIVE SHAFT	Year/Month 2020/01

KeyNo.	Part Number	Part Name	Quantity	Other
1	TA00038269A	JOINT	1	
2	22242-000200	SNAP RING, SHAFT (Φ 20)	1	
3	CT85150000A4	Bearing #6305	1	
4	TA00041006A	SHAFT, PTO DRIVE	1	
5	22252-000620	RING, CIRCLIP (Φ 62)	1	
6	27260-620000	SEALING CAP	1	
7	24101-062074	BALL BEARING (#6207)	2	
8	TA00039162C	BUSH	1	
9	TA00041007A	GEAR, PTO1	1	
10	TZ45100000A3	HUB,P.T.O	1	
11	TZ45110000C4	SLEEVE,P.T.O	1	
12	TA00040193C	SLEEVE	1	
13	TA00041008A	GEAR, PTO2	1	
14	FGG8040000B	WASHER	1	
15	22242-000400	SNAP RING, SHAFT (Φ 40)	1	
16	TA00038293B	SHAFT, PTO	1	
17	TT62040000A3	PTO OIL SEAL QLF35X60X19	1	
18	24341-000700	O-RING, FIX (Φ70)	1	
19	TA00038449B	COVER	1	
20	22242-000350	SNAP RING, SHAFT (Φ 35)	1	
21	26106-100202	HEX BOLT, (10-20)	4	
22	24101-063050	DEEP GROOVE BALL BEARING	1	
23	TA00040569B	PLATE	1	
24	26106-080142	SCREW,HEXFLANGEHEADCAP	2	

FIG C063-2 3015H	PTO DRIVE SHAFT(2017.02)	Year/Month 2020/01

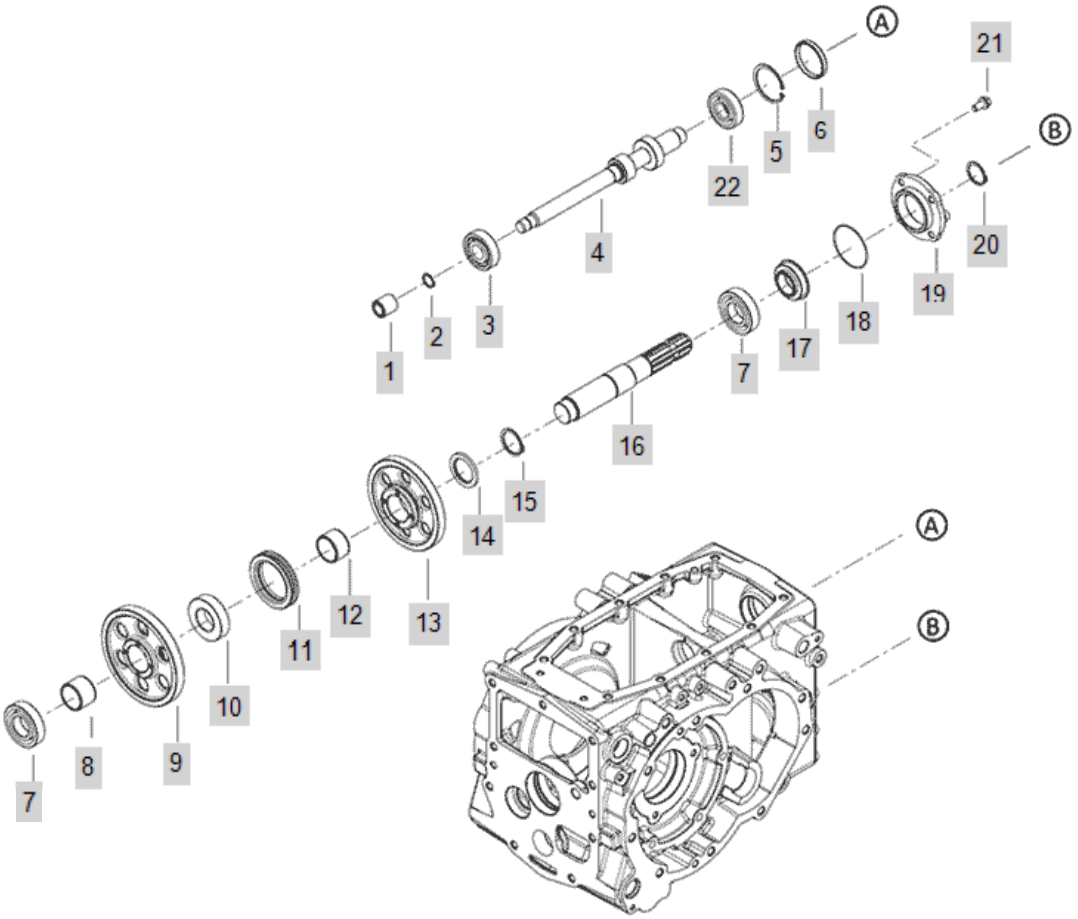

FIG C063-2 3015H	PTO DRIVE SHAFT(2017.02)	Year/Month 2020/01

KeyNo.	Part Number	Part Name	Quantity	Other
1	TA00038269A	JOINT	1	
2	22242-000200	SNAP RING, SHAFT (Φ 20)	1	
3	CT85150000A4	Bearing #6305	1	
4	TA00041006A	SHAFT, PTO DRIVE	1	
5	22252-000620	RING, CIRCLIP (Φ 62)	1	
6	27260-620000	SEALING CAP	1	
7	24101-062074	BALL BEARING (#6207)	2	
8	TA00039162C	BUSH	1	
9	TA00041007A	GEAR, PTO1	1	
10	TZ45100000A3	HUB,P.T.O	1	
11	TZ45110000C4	SLEEVE,P.T.O	1	
12	TA00040193C	SLEEVE	1	
13	TA00041008A	GEAR, PTO2	1	
14	FGG8040000B	WASHER	1	
15	22242-000400	SNAP RING, SHAFT (Φ 40)	1	
16	TA00038293B	SHAFT, PTO	1	
17	TT62040000A3	PTO OIL SEAL QLF35X60X19	1	
18	24341-000700	O-RING, FIX (Φ70)	1	
19	TA00038449B	COVER	1	
20	22242-000350	SNAP RING, SHAFT (Φ 35)	1	
21	26106-100202	HEX BOLT, (10-20)	4	
22	24101-063050	DEEP GROOVE BALL BEARING	1	

FIG C063B-3 3015H	PTO DRIVE SHAFT(2019.01~)	Year/Month 2020/01

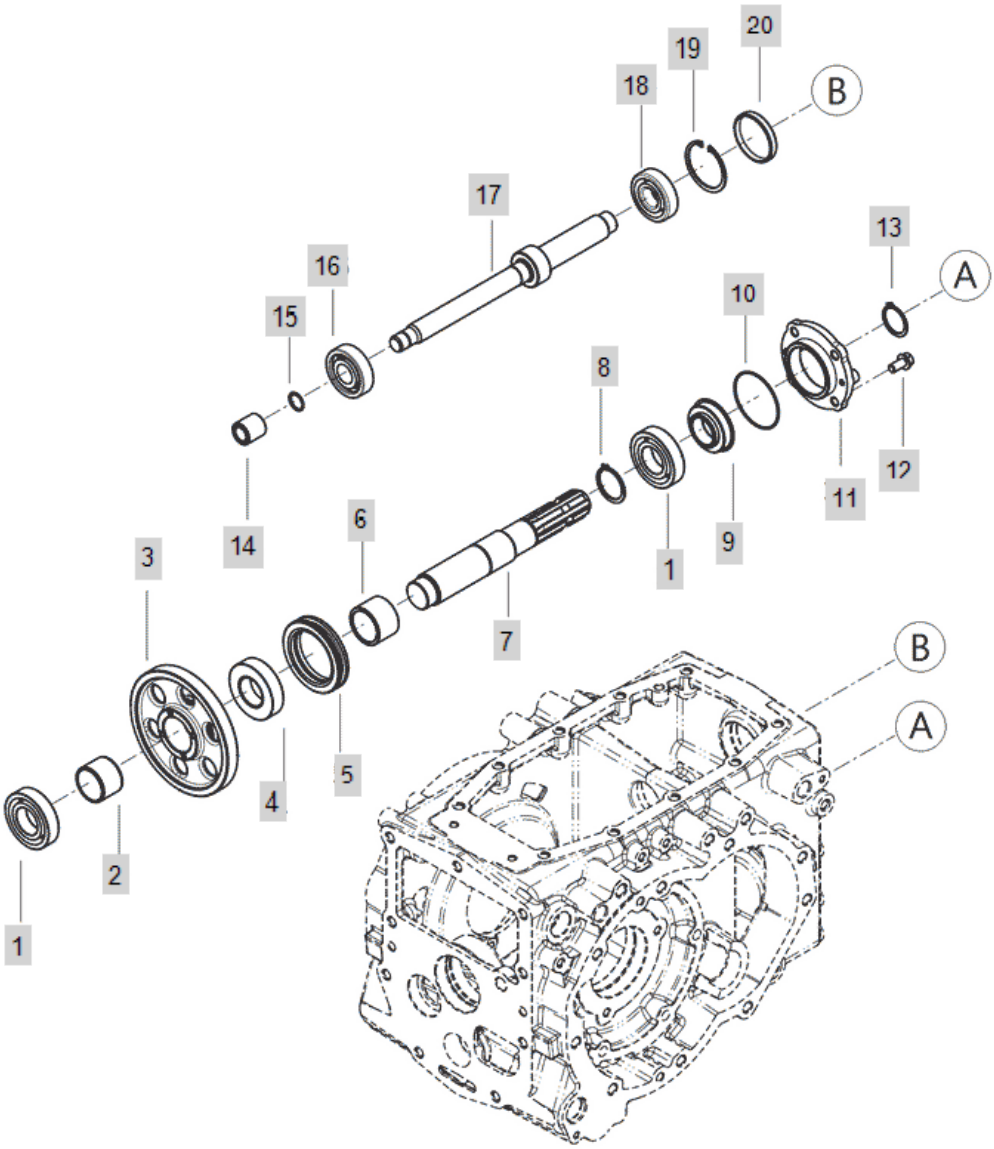

FIG C063B-3 3015H	PTO DRIVE SHAFT(2019.01~)	Year/Month 2020/01

KeyNo.	Part Number	Part Name	Quantity	Other
1	24101-062074	BALL BEARING (#6207)	2	
2	TA00039162C	BUSH	1	
3	TA00041007A	GEAR, PTO1	1	
4	TZ45100000A3	HUB,P.T.O	1	
5	TZ45110000C4	SLEEVE,P.T.O	1	
6	TA00058019A	SPACER	1	
7	TA00038293D	SHAFT, PTO	1	
8	22242-000400	SNAP RING, SHAFT (Φ 40)	1	
9	TT62040000A3	PTO OIL SEAL QLF35X60X19	1	
10	24341-000700	O-RING, FIX (Φ70)	1	
11	TA00038449B	COVER	1	
12	26106-100202	HEX BOLT, (10-20)	4	
13	22242-000350	SNAP RING, SHAFT (Φ 35)	1	
14	TA00038269A	JOINT	1	
15	22242-000200	SNAP RING, SHAFT (Φ 20)	1	
16	CT85150000A4	Bearing #6305	1	
17	TA00058807A		1	
18	24101-063050	DEEP GROOVE BALL BEARING	1	
19	22252-000620	RING, CIRCLIP (Φ 62)	1	
20	27260-620000	SEALING CAP	1	

FIG C068 3015H	LEVER ASS'Y, RANGE SHIFT	Year/Month 2020/01

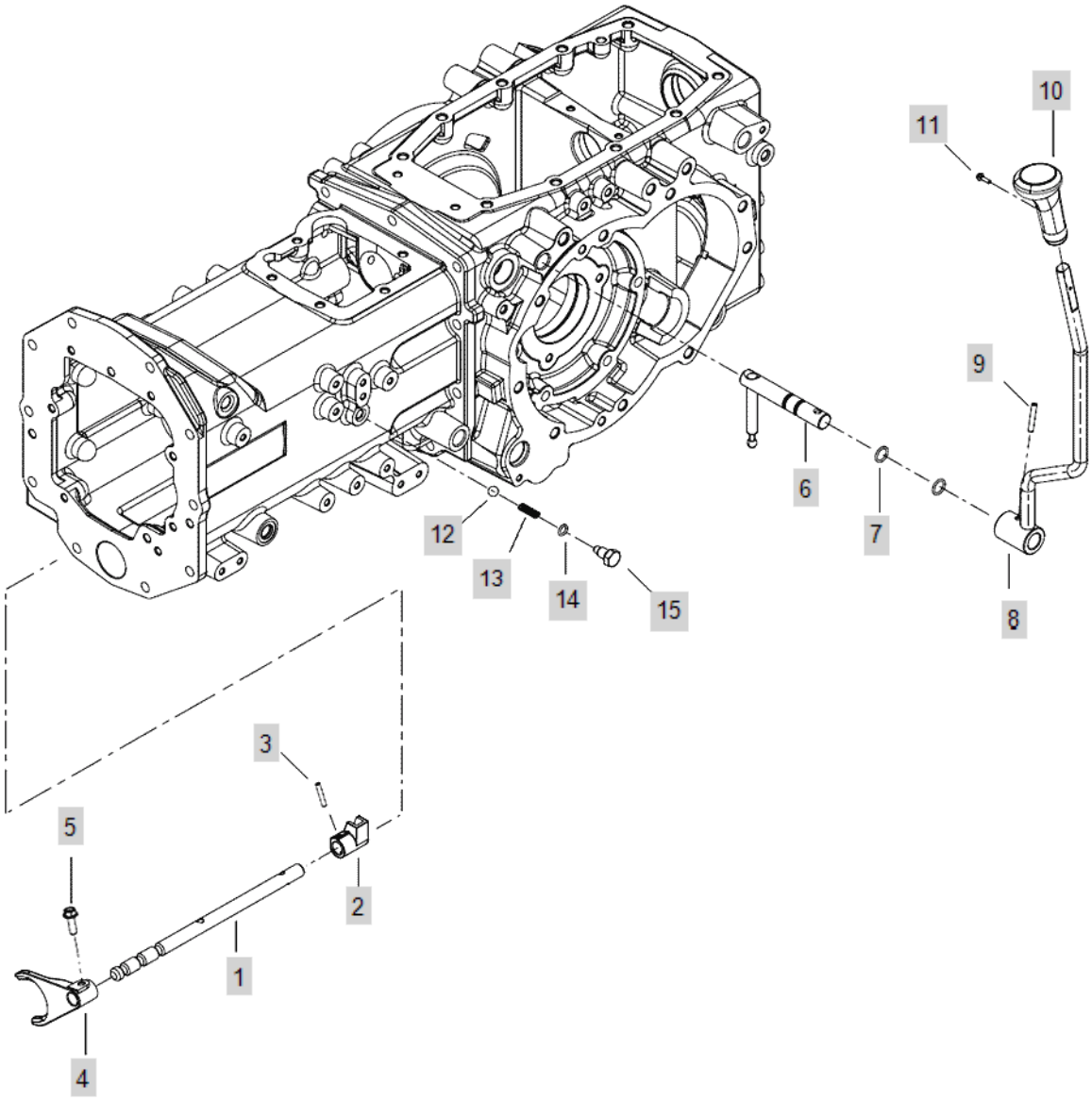

FIG C068 3015H	LEVER ASS'Y, RANGE SHIFT	Year/Month 2020/01

KeyNo.	Part Number	Part Name	Quantity	Other
1	TA00042214A	SHAFT FORK (HST)	1	
2	TA00038542C	ADAPTOR, RANGE	1	
3	22351-060025	PIN, SPRING (6-25)	1	
4	TA00038735B	FORK, RANGE SHIFT	1	
5	26013-080302	HEX BOLT W/WASHER	1	
6	TA00038546D	SHIFT	1	
7	24311-000160	O-RING, DYNAMIC (Φ16)	2	
8	TA00038640D	LEVER, RANGE SHIFT	1	
9	22351-060036	PIN, SPRING (6-36)	1	
10	TA00043530A	KNOB	1	
11	26023-040162	SCREW	1	
12	24190-110001	Ball, Steel (11/32)	1	
13	TA00038502A	SPRING	1	
14	24311-240100	SEAL, O-RING	1	
15	TA00038540A	BOLT, RAIL	1	

FIG C072-1 3015H	FORNT DRIVE SHAFT	Year/Month 2020/01

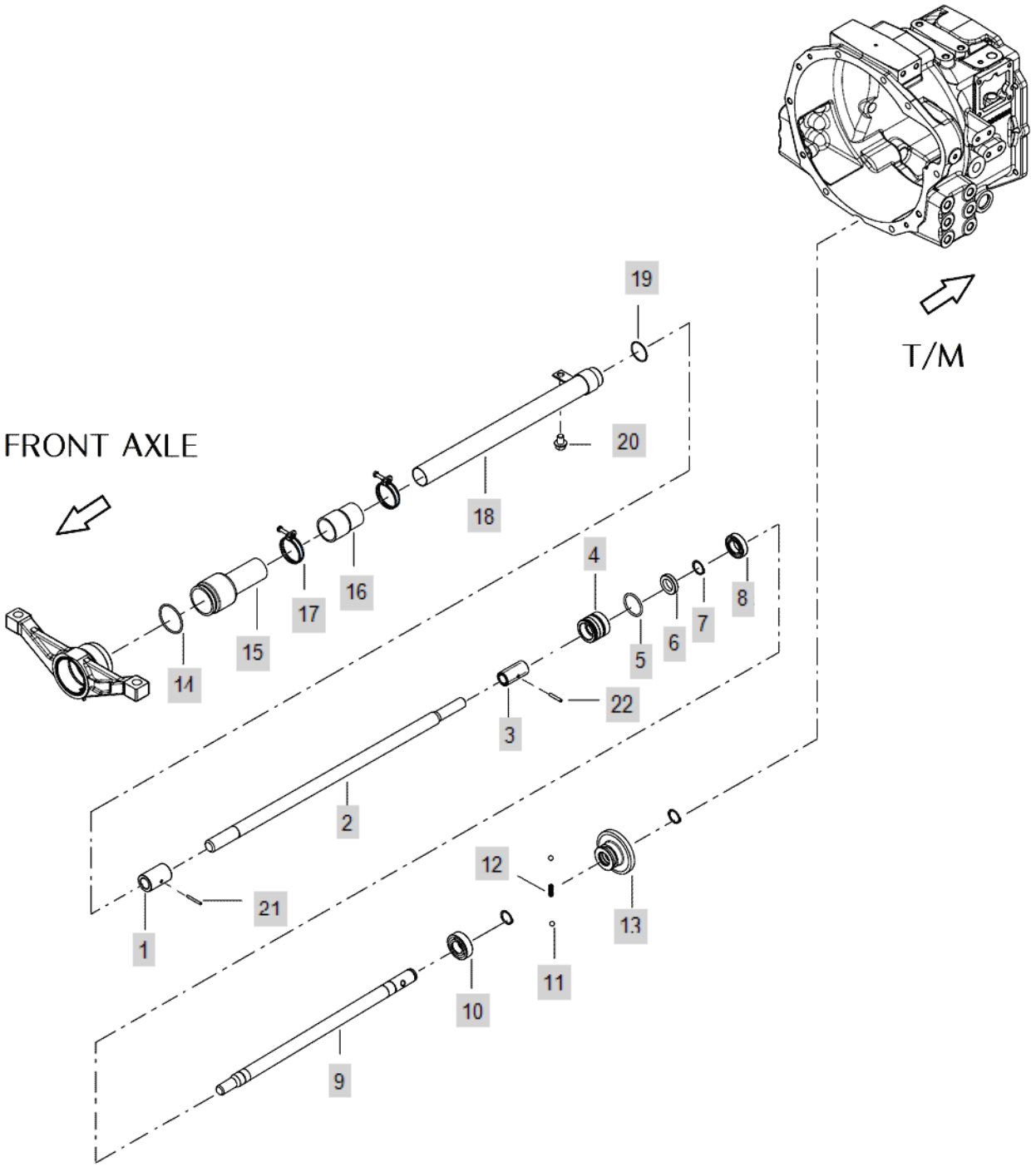

FIG C072-1 3015H	FORNT DRIVE SHAFT	Year/Month 2020/01

KeyNo.	Part Number	Part Name	Quantity	Other
1	NT15080000B	COUPLING R	1	
2	TA00038621C	PROPELLER SHAFT	1	
3	TA00038620B	4WD JOINT	1	
4	TA00038089A	HOUSING, OIL SEAL	1	
5	24311-000410	O-RING	1	
6	24421-254008	Seal, Oil (#25-40-08)	1	
7	22242-000250	SNAP RING, SHAFT (Φ 25)	3	
8	24101-060050	DEEP GROOVE BALL BEARING	1	
9	TA00038094B	SHAFT 4WD DRV	1	
10	24101-062054	Bearing, Ball (#6205)	1	
11	24190-110001	Ball, Steel (11/32)	2	
12	TA00038591A	SPRING	1	
13	TA00038090D	GEAR 4WD DRVN	1	
14	24321-000550	SEAL,O-RING	1	
15	TA00040522A	COVER	1	
16	TA00040524B	BOOTS	1	
17	23000-048000	CLAMP,HOSE	2	
17-1	23010-050000	HOSEBAND50	2	
18	TA00040523C	COVER	1	
19	24341-000380	O-RING	1	
20	26106-120162	BOLT	1	
21	22351-040036	SPRING PIN	1	
22	22351-050030	PIN, SPRING (5-03)	1	

FIG C072A-2 3015H	FORNT DRIVE SHAFT(2019.04~)	Year/Month 2020/01

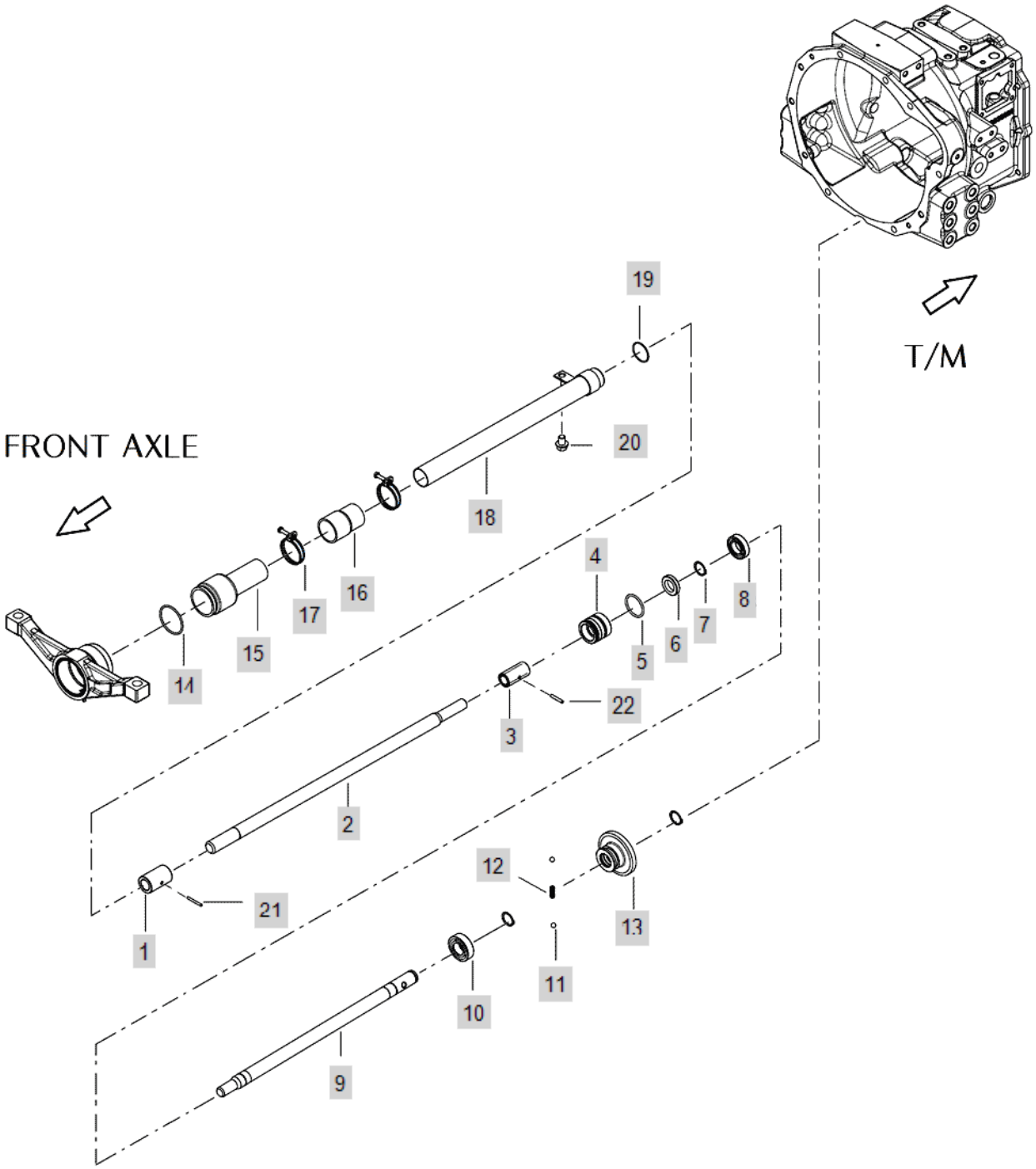

FIG C072A-2 3015H	FORNT DRIVE SHAFT(2019.04~)	Year/Month 2020/01

KeyNo.	Part Number	Part Name	Quantity	Other
1	NT15080000B	COUPLING R	1	
2	TA00038621C	PROPELLER SHAFT	1	
3	TA00038620B	4WD JOINT	1	
4	TA00038089A	HOUSING, OIL SEAL	1	
5	24311-000410	O-RING	1	
6	24421-254008	Seal, Oil (#25-40-08)	1	
7	22242-000250	SNAP RING, SHAFT (Φ 25)	3	
8	24101-060050	DEEP GROOVE BALL BEARING	1	
9	TA00038094B	SHAFT 4WD DRV	1	
10	24101-062054	Bearing, Ball (#6205)	1	
11	24190-110001	Ball, Steel (11/32)	2	
12	TA00038591A	SPRING	1	
13	TA00038090D	GEAR 4WD DRVN	1	
14	24321-000550	SEAL,O-RING	1	
15	TA00040522A	COVER	1	
16	TA00040524B	BOOTS	1	
17	23000-048000	CLAMP,HOSE	2	
18	TA00040523C	COVER	1	
19	24341-000380	O-RING	1	
20	26106-120162	BOLT	1	
21	22351-040036	SPRING PIN	1	
22	22351-050030	PIN, SPRING (5-03)	1	

FIG C072E-2 3015H	FORNT DRIVE SHAFT(2019.04~)	Year/Month 2020/01

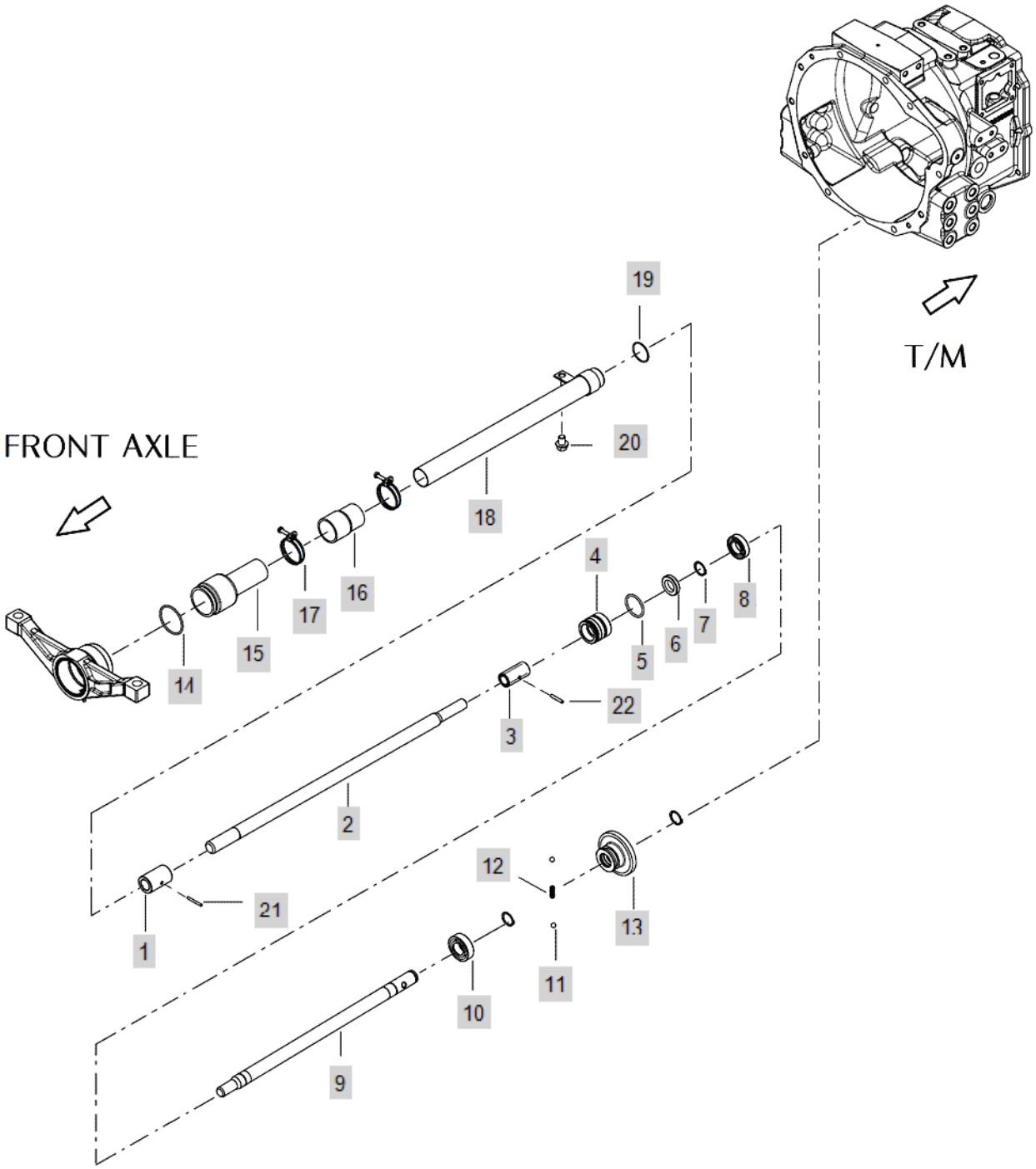

FIG C072E-2 3015H	FORNT DRIVE SHAFT(2019.04~)	Year/Month 2020/01

KeyNo.	Part Number	Part Name	Quantity	Other
1	NT15080000B	COUPLING R	1	
2	TA00038621C	PROPELLER SHAFT	1	
3	TA00038620B	4WD JOINT	1	
4	TA00038089A	HOUSING, OIL SEAL	1	
5	24311-000410	O-RING	1	
6	24421-254008	Seal, Oil (#25-40-08)	1	
7	22242-000250	SNAP RING, SHAFT (Φ 25)	3	
8	24101-060050	DEEP GROOVE BALL BEARING	1	
9	TA00038094B	SHAFT 4WD DRV	1	
10	24101-062054	Bearing, Ball (#6205)	1	
11	24190-110001	Ball, Steel (11/32)	2	
12	TA00038591A	SPRING	1	
13	TA00050634A	FOUR WHEEL DRIVEN GEAR	1	
14	24321-000550	SEAL,O-RING	1	
15	TA00040522A	COVER	1	
16	TA00040524B	BOOTS	1	
17	23000-048000	CLAMP,HOSE	2	
18	TA00040523C	COVER	1	
19	24341-000380	O-RING	1	
20	26106-120162	BOLT	1	
21	22351-040036	SPRING PIN	1	
22	22351-050030	PIN, SPRING (5-03)	1	

FIG C073-1 3015H	4WD LEVER	Year/Month 2020/01

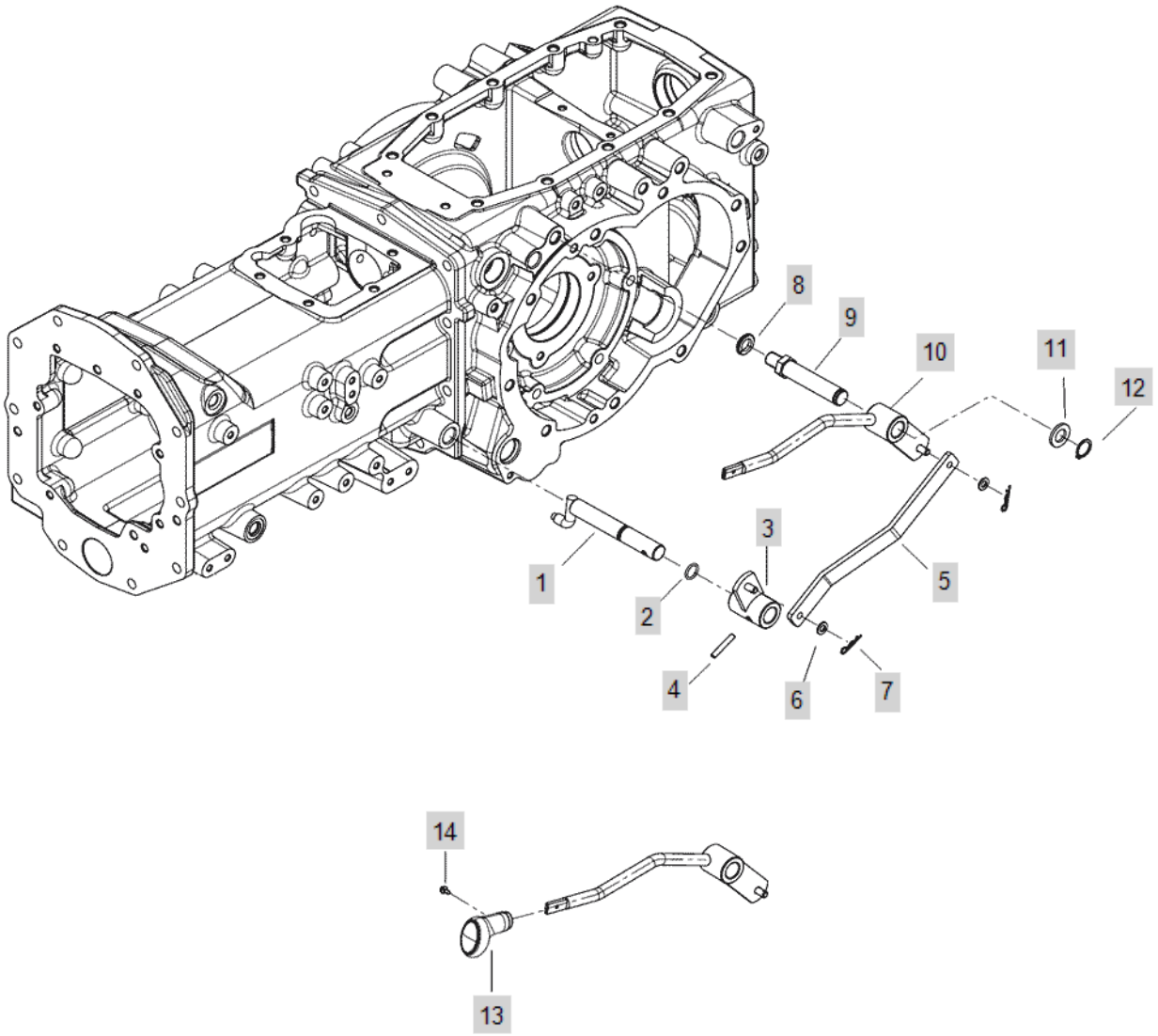

FIG C073-1 3015H	4WD LEVER	Year/Month 2020/01

KeyNo.	Part Number	Part Name	Quantity	Other
1	TA00038504E	4WD LEVER	1	
2	24311-000160	O-RING, DYNAMIC (Φ16)	1	
3	TA00038511A	PTO ARM	1	
4	22351-060036	PIN, SPRING (6-36)	1	
5	TA00038575B	4WD LEVER LINK	1	
6	22117-080000	WASHER, PLAIN (Φ 08)	2	
7	22360-080000	PIN , SNAP (8Φ)	2	
8	22217-160000	WASHER, SPRING (Φ 16)	1	
9	TA00038566B	PTO LEVER SHAFT	1	
10	TA00038570D	4WD LEVER	1	
11	22137-200000	WASHER , PLAIN	1	
12	22242-000200	SNAP RING, SHAFT (Φ 20)	1	
13	TA00015827A	KNOB, FRONT DRIVE LEVER	1	
14	26023-040102	SCREW W/WASHER	1	

FIG C073-2 3015H	4WD LEVER(2019.04~)	Year/Month 2020/01

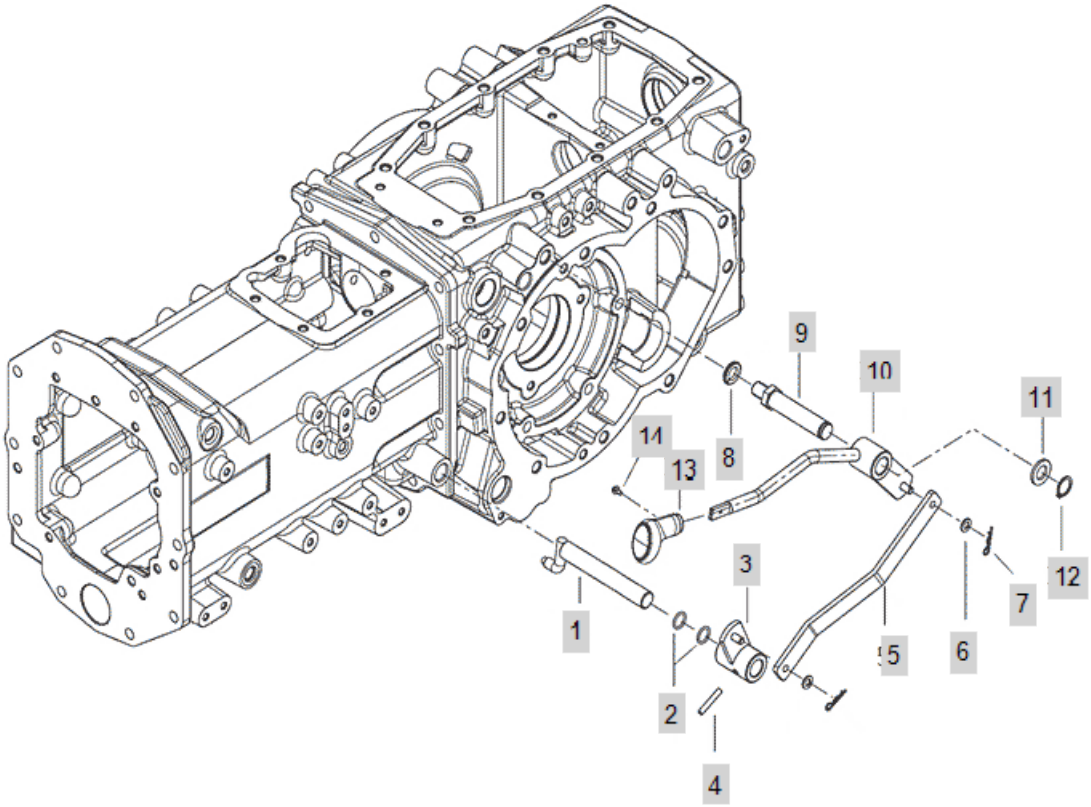

FIG C073-2 3015H	4WD LEVER(2019.04~)	Year/Month 2020/01

KeyNo.	Part Number	Part Name	Quantity	Other
1	TA00038504E	4WD LEVER	1	
2	24311-000160	O-RING, DYNAMIC (Φ16)	1	
3	TA00038511A	PTO ARM	1	
4	22351-060036	PIN, SPRING (6-36)	1	
5	TA00038575B	4WD LEVER LINK	1	
6	22117-080000	WASHER, PLAIN (Φ 08)	2	
7	22360-080000	PIN , SNAP (8Φ)	2	
8	22217-160000	WASHER, SPRING (Φ 16)	1	
9	TA00038566B	PTO LEVER SHAFT	1	
10	TA00038570D	4WD LEVER	1	
11	22137-200000	WASHER , PLAIN	1	
12	22242-000200	SNAP RING, SHAFT (Φ 20)	1	
13	TA00015827A	KNOB, FRONT DRIVE LEVER	1	
14	26023-040102	SCREW W/WASHER	1	

FIG C074-1 3015H	FORK & LEVER, PTO-DELETED PAGE	Year/Month 2020/01

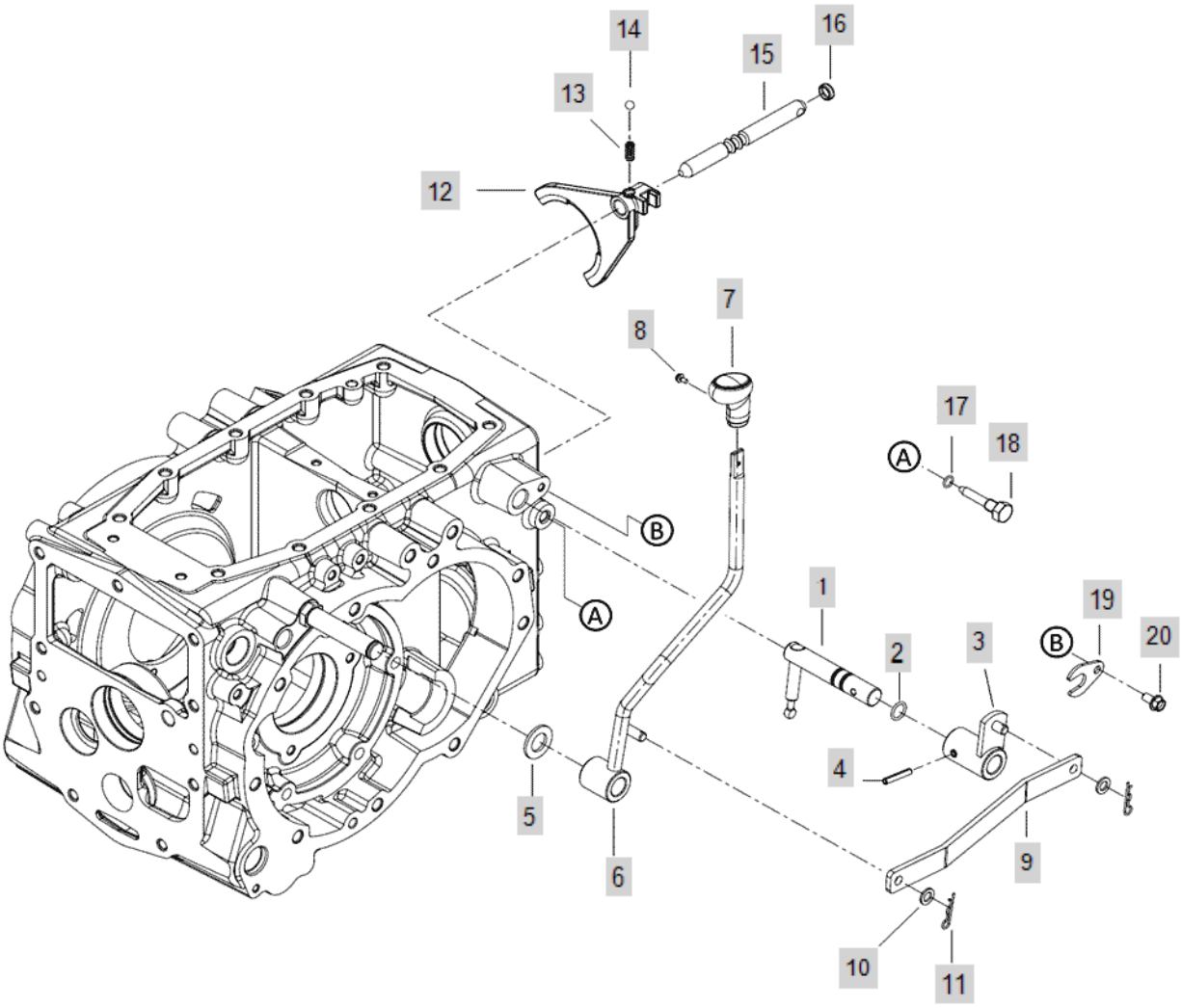

FIG C074-1 3015H	FORK & LEVER, PTO-DELETED PAGE	Year/Month 2020/01

KeyNo.	Part Number	Part Name	Quantity	Other
1	TA00039129A	SHAFT,P.T.O SHIFT	1	
2	24311-000160	O-RING, DYNAMIC (Φ16)	1	
3	TA00039157C	ARM, PTO SHIFT	1	
4	22351-060036	PIN, SPRING (6-36)	1	
5	22137-200000	WASHER , PLAIN	1	
6	TA00039133B	LEVER,P.T.O SHIFT	1	
7	TA00015833A	KNOB, PTO SHIFT	1	
8	26023-040102	SCREW W/WASHER	1	
9	TA00039152B	LINK, PTO LEVER	1	
10	22117-100000	WASHER, PLAIN (Φ 10)	2	
11	22360-100000	PIN , SNAP (10Φ)	2	
12	TA00039228C	FORK,PTO	1	
13	TA00038502A	SPRING	1	
14	24190-110001	Ball, Steel (11/32)	1	
15	TA00039153A	FORK SHAFT, PTO	1	
16	27260-170000	cap	1	
17	24311-000100	O-RING, DYNAMIC (Φ10)	1	
18	TA00038565A	RAIL FIX BOLT	1	
19	FGF1400000B	PLATE	1	
20	26106-080162	SCREW,HEXFLANGEHEADCAP	1	

FIG C074-2 3015H	FORK & LEVER, PTO(2019.04~)-DELETED PAGE	Year/Month 2020/01

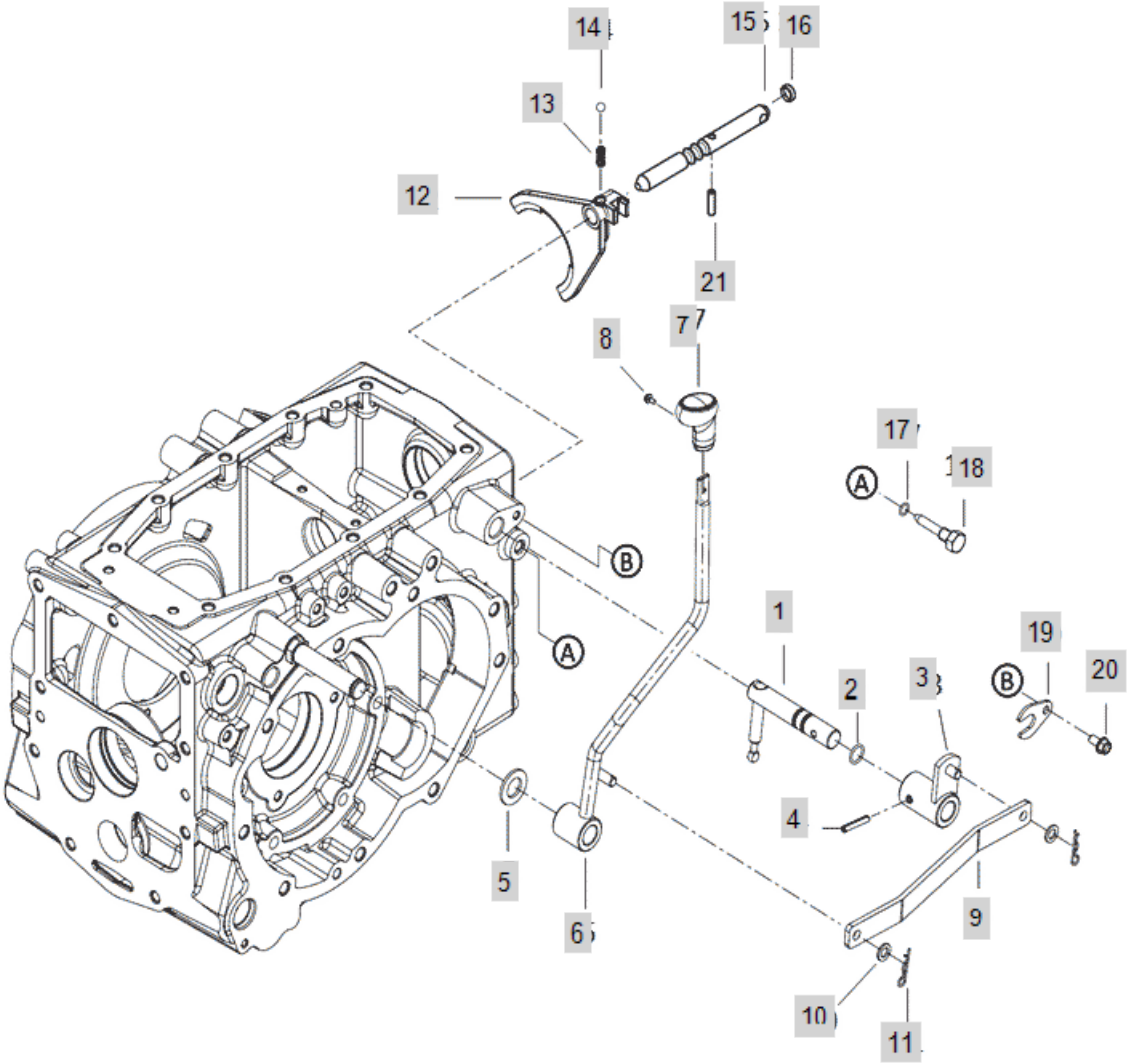

FIG C074-2 3015H	FORK & LEVER, PTO(2019.04~)-DELETED PAGE	Year/Month 2020/01

KeyNo.	Part Number	Part Name	Quantity	Other
1	TA00039129A	SHAFT,P.T.O SHIFT	1	
2	24311-000160	O-RING, DYNAMIC (Φ16)	1	
3	TA00039157C	ARM, PTO SHIFT	1	
4	22351-060036	PIN, SPRING (6-36)	1	
5	22137-200000	WASHER , PLAIN	1	
6	TA00039133B	LEVER,P.T.O SHIFT	1	
7	TA00015833A	KNOB, PTO SHIFT	1	
8	26023-040102	SCREW W/WASHER	1	
9	TA00039152B	LINK, PTO LEVER	1	
10	22117-100000	WASHER, PLAIN (Φ 10)	2	
11	22360-100000	PIN , SNAP (10Φ)	2	
12	TA00039228C	FORK,PTO	1	
13	TA00038502A	SPRING	1	
14	24190-110001	Ball, Steel (11/32)	1	
15	TA00039153A	FORK SHAFT, PTO	1	
16	27260-170000	cap	1	
17	24311-000100	O-RING, DYNAMIC (Φ10)	1	
18	TA00038565A	RAIL FIX BOLT	1	
19	FGF1400000B	PLATE	1	
20	26106-080162	SCREW,HEXFLANGEHEADCAP	1	
21	22351-060025	PIN, SPRING (6-25)	1	

FIG C074B-3 3015H	FORK & LEVER, PTO(2019.12~)	Year/Month 2020/01

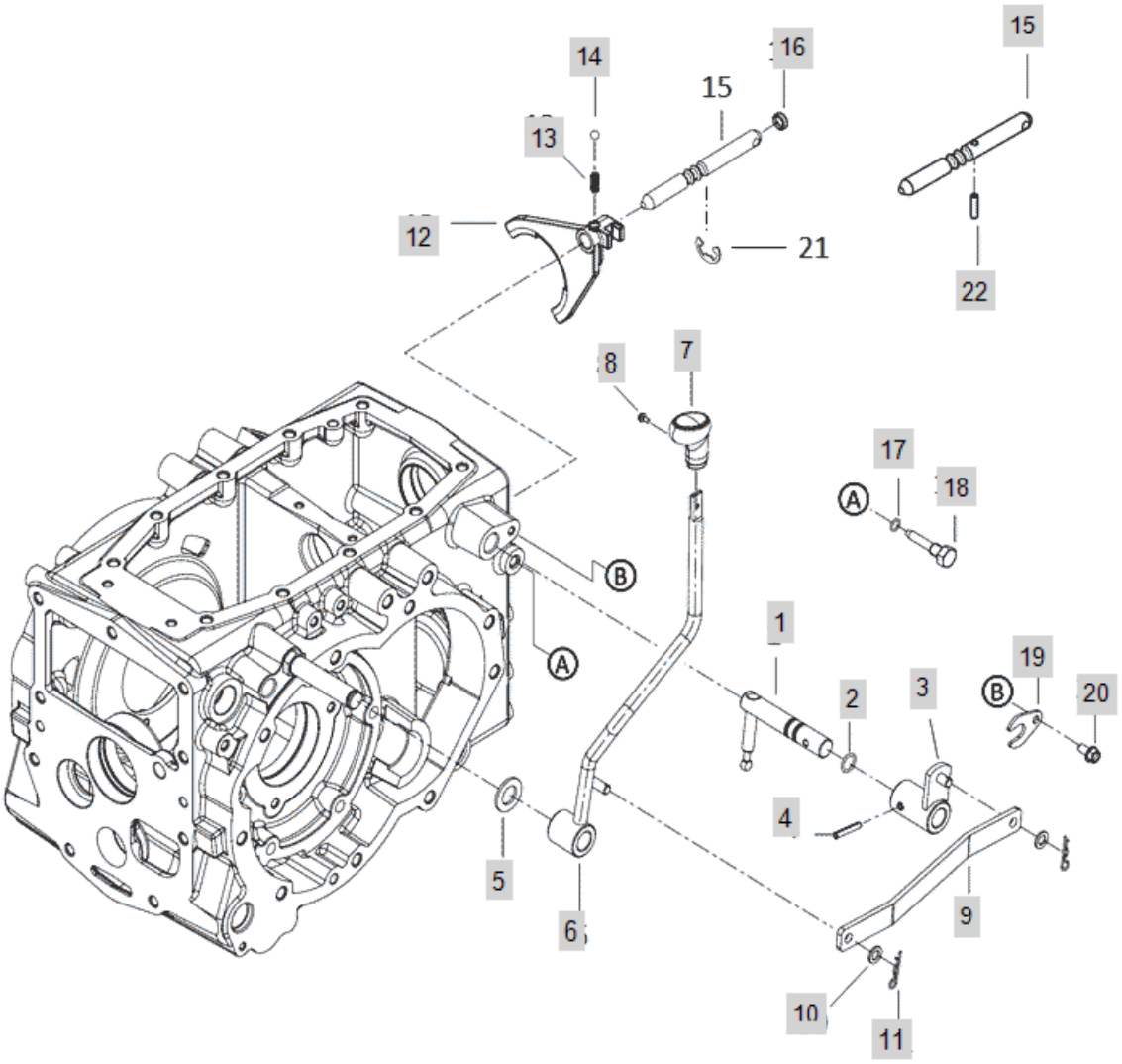

FIG C074B-3 3015H	FORK & LEVER, PTO(2019.12~)	Year/Month 2020/01

KeyNo.	Part Number	Part Name	Quantity	Other
1	TA00039129A	SHAFT,P.T.O SHIFT	1	
2	24311-000160	O-RING, DYNAMIC (Φ16)	1	
3	TA00039157C	ARM, PTO SHIFT	1	
4	22351-060036	PIN, SPRING (6-36)	1	
5	22137-200000	WASHER , PLAIN	1	
6	TA00039133B	LEVER,P.T.O SHIFT	1	
7	TA00015833A	KNOB, PTO SHIFT	1	
8	26023-040102	SCREW W/WASHER	1	
9	TA00039152B	LINK, PTO LEVER	1	
10	22117-100000	WASHER, PLAIN (Φ 10)	2	
11	22360-100000	PIN , SNAP (10Φ)	2	
12	TA00039228C	FORK,PTO	1	
13	TA00038502A	SPRING	1	
14	24190-110001	Ball, Steel (11/32)	1	
15	TA00039153B	FORK SHAFT, PTO	1	
16	27260-170000	cap	1	
17	24311-000100	O-RING, DYNAMIC (Φ10)	1	
18	TA00038565A	RAIL FIX BOLT	1	
19	FGF1400000B	PLATE	1	
20	26106-080162	SCREW,HEXFLANGEHEADCAP	1	
22	22351-060025	PIN, SPRING (6-25)	1	

FIG C078 3015H	RING GEAR&DIFF.GEAR ASS'Y	Year/Month 2020/01

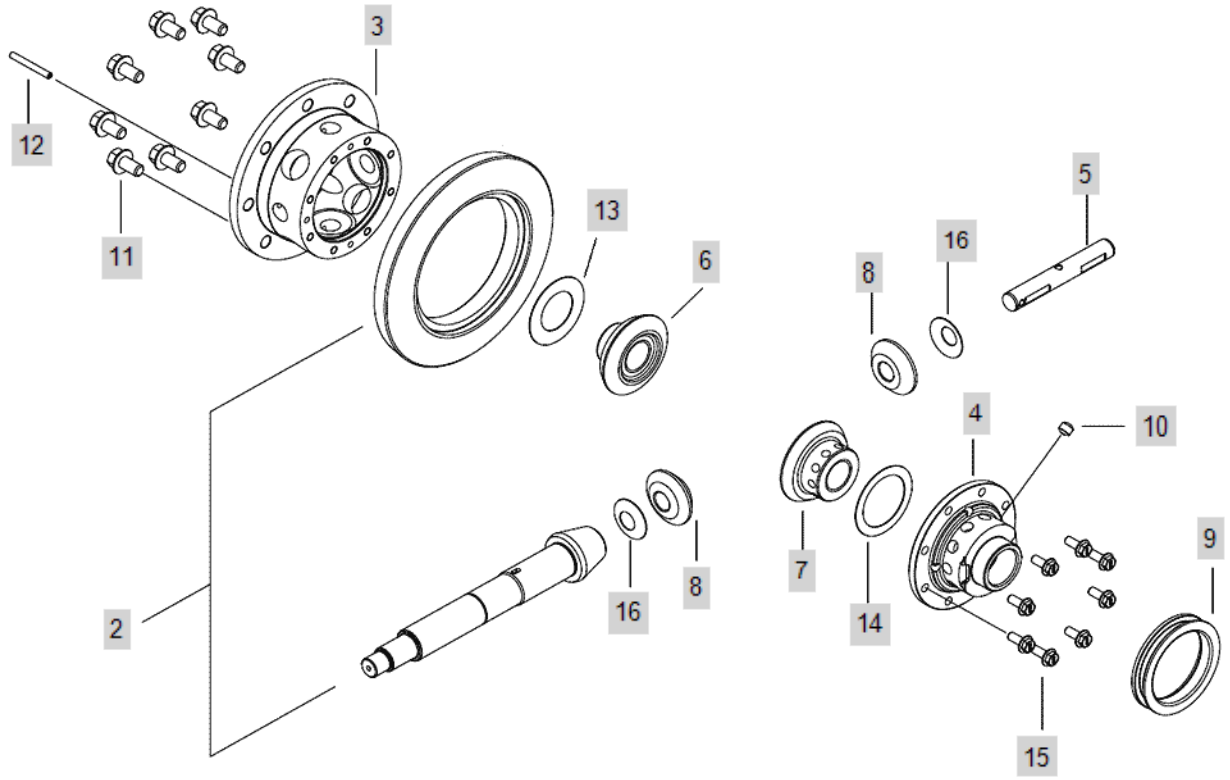

FIG C078 3015H	RING GEAR&DIFF.GEAR ASS'Y	Year/Month 2020/01

KeyNo.	Part Number	Part Name	Quantity	Other
1	TA00038522B	DIFFERENTIAL ASSY	1	
2	TA00038772B	RING GEAR ASSY	1	
3	TA00038523A	CASE R, DIFF	1	
4	TA00032118A	CASE LH, DIFF.	1	
5	TA00032091A	SHAFT, DIFFERENTIAL	1	
6	TA00032090A	SIDE GEAR R, DIFFERENTIAL	1	
7	TA00032089A	SIDE GEAR L, DIFFERENTIAL	1	
8	TA00032079A	PINION	2	
9	TA00038510A	SLIDER	1	
10	TA00038507A	ROLLER	10	
11	TA00038929A	BOLT	8	
12	22351-060050	PIN, SPRING (6-50)	1	
13	TA00032148A	THRUST WASHER	1	
14	TA00032149A	WASHER	1	
15	TA00038928A	BOLT	8	
16	TA00032092A	BRACKET	2	

FIG C079-1 3015H	DIFFERENTIAL	Year/Month 2020/01

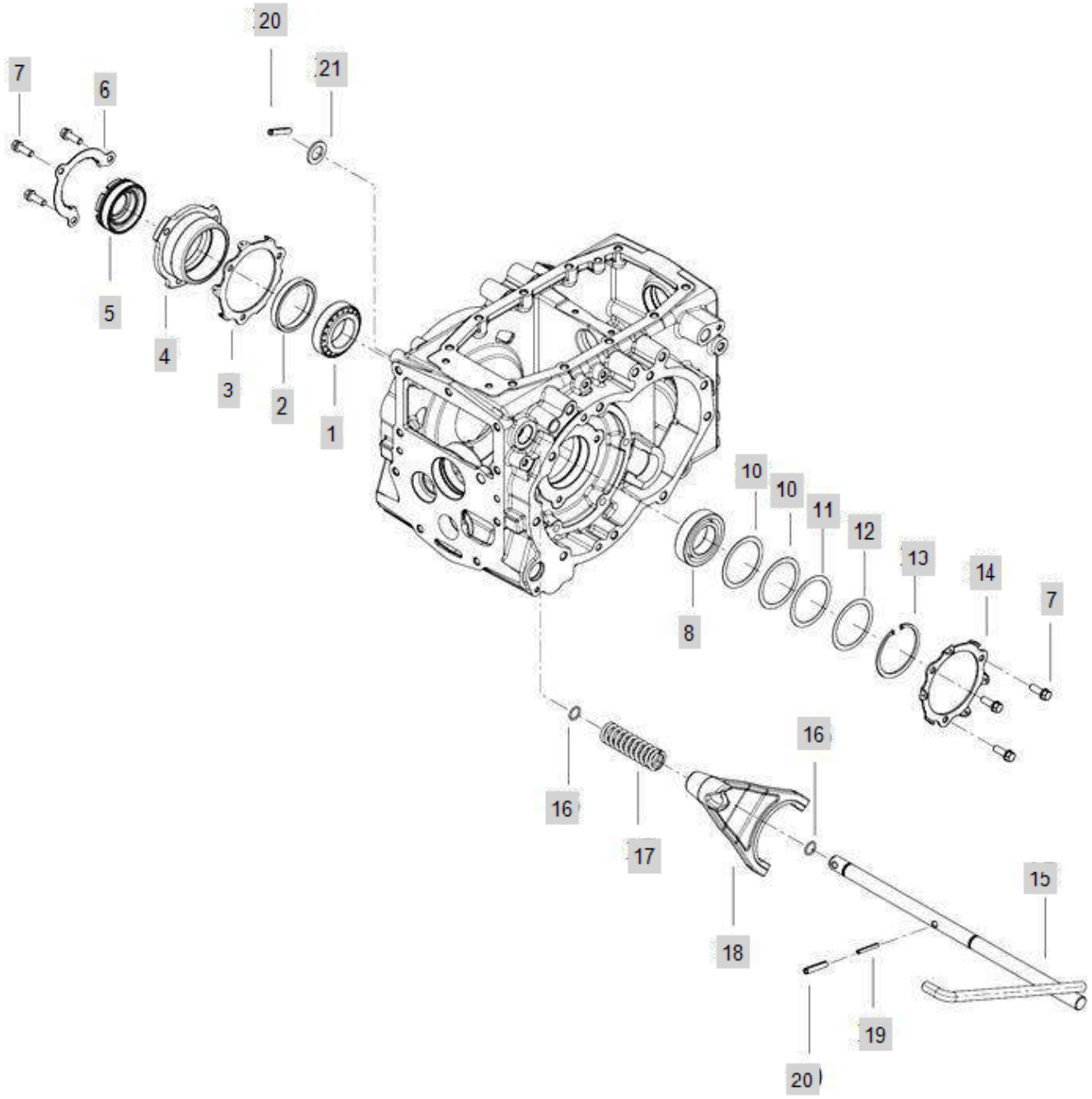

FIG C079-1 3015H	DIFFERENTIAL	Year/Month 2020/01

KeyNo.	Part Number	Part Name	Quantity	Other
1	FGH0220000A4	BEARING(32210J)	1	
2	TA00038525A	SPACER	1	
3	TA00038662B	SPRING HOLDER	1	
4	TA00038533A	SUPPORT	1	
5	TA00038537A	SCREW	1	
6	TA00038665B	FIX PLATE	1	
7	26013-100302	SCREW,CAPTIVEWASHERCAP	6	
8	24101-062104	BALL BEARING #6210 -> FGF4200000A4	1	
10	TA00038527A	RANER(0.2T)	1	
11	TA00038528A	RANER(0.5T)	1	
12	TA00041806A	SEAM(1.0T)	1	
13	22252-000900	RING, CIRCLIP (Φ 90)	1	
14	TA00038662B	SPRING HOLDER	1	
15	TA00042500A	PEDAL, ASSY	1	
16	24311-000160	O-RING, DYNAMIC (Φ16)	2	
17	TA00038543A	SPRING	1	
18	TA00038685C	DIFFERENTIAL FORK	1	
19	22351-050040	PIN, SPRING (5-04)	2	
20	22351-080040	PIN, SPRING (8-40)	1	
21	22117-200000	WASHER	1	

FIG C079-2 3015H	DIFFERENTIAL	Year/Month 2020/01

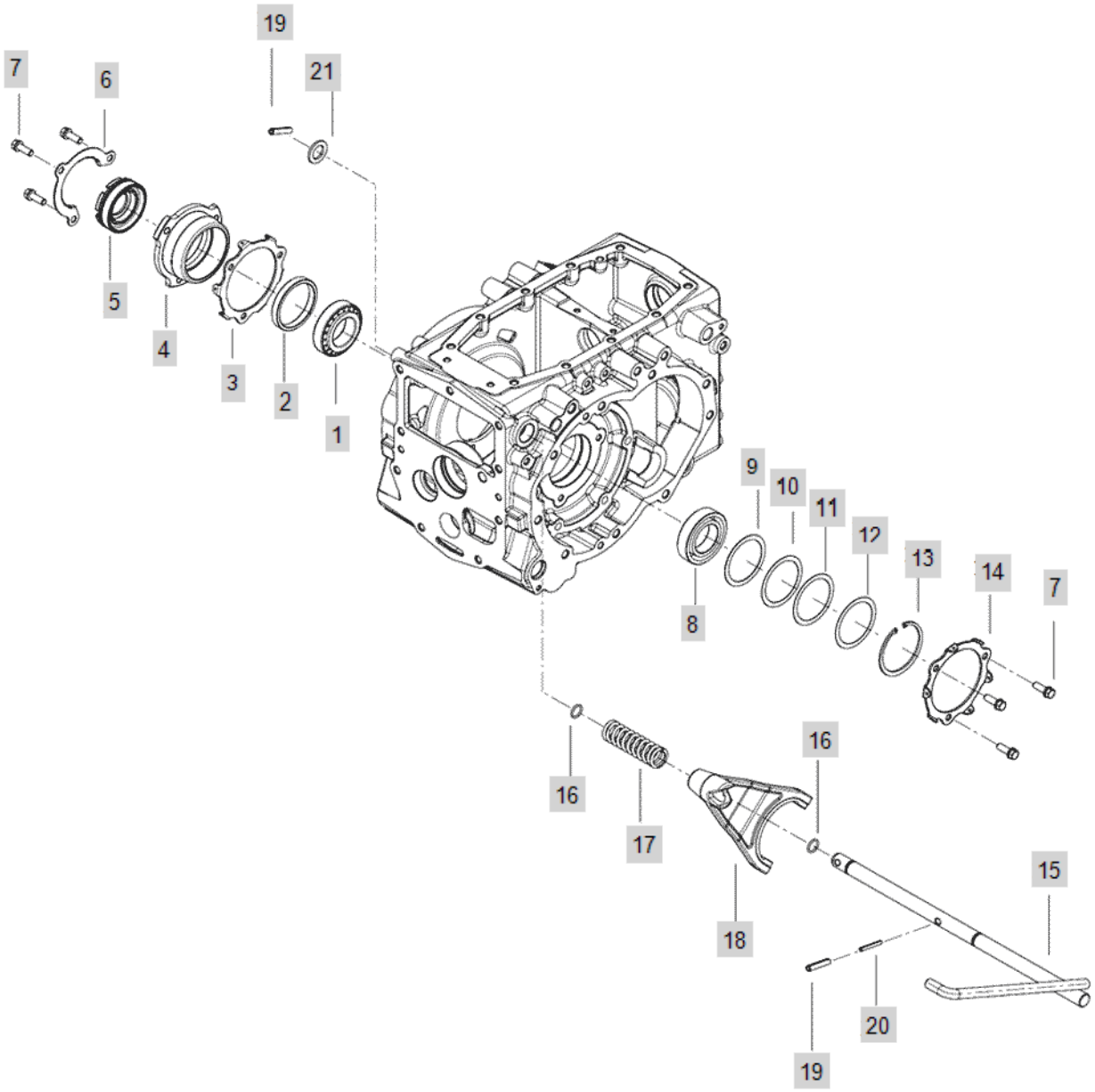

FIG C079-2 3015H	DIFFERENTIAL	Year/Month 2020/01

KeyNo.	Part Number	Part Name	Quantity	Other
1	FGH0220000A4	BEARING(32210J)	1	
2	TA00038525A	SPACER	1	
3	TA00038662B	SPRING HOLDER	1	
4	TA00038533A	SUPPORT	1	
5	TA00038537A	SCREW	1	
6	TA00038665B	FIX PLATE	1	
7	26013-100302	SCREW,CAPTIVEWASHERCAP	6	
8	24101-062104	BALL BEARING #6210 -> FGF4200000A4	1	
9	TA00038526A	SHIM(0.1T)	1	
10	TA00038527A	RANER(0.2T)	1	
11	TA00038528A	RANER(0.5T)	1	
12	TA00041806A	SEAM(1.0T)	1	
13	22252-000900	RING, CIRCLIP (Φ 90)	1	
14	TA00038662B	SPRING HOLDER	1	
15	TA00042500A	PEDAL, ASSY	1	
16	24311-000160	O-RING, DYNAMIC (Φ16)	2	
17	TA00038543A	SPRING	1	
18	TA00038685C	DIFFERENTIAL FORK	1	
19	22351-050040	PIN, SPRING (5-04)	2	
20	22351-080040	PIN, SPRING (8-40)	1	
21	22117-200000	WASHER	1	

FIG C082 3015H	DRIVING PART, REAR AXLE	Year/Month 2020/01

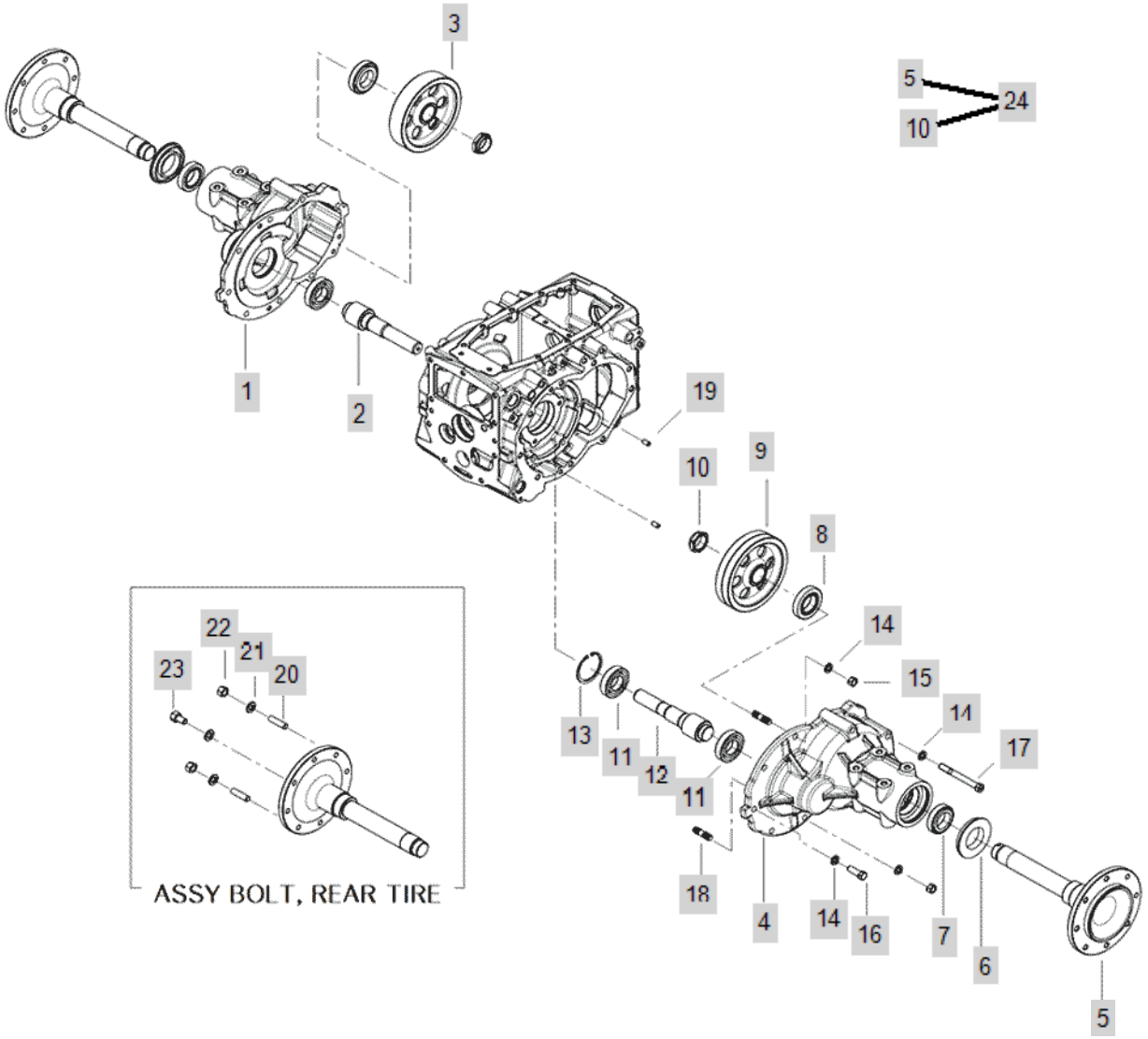

FIG C082 3015H	DRIVING PART, REAR AXLE	Year/Month 2020/01

KeyNo.	Part Number	Part Name	Quantity	Other
1	TA00038690B	REAR AXLE HOUSING R	1	
2	TA00038395C	FINAL_REAR_PINION(R)	1	
3	TA00038393B	FINAL_REAR_GEAR (R)	1	
4	TA00038689B	REAR AXLE HOUSING L	1	
5	TA00038361B	REAR AXLE SHAFT	2	
6	TA00033423A	SEAL, OIL (REAR AXLE)	2	
7	24141-320090	TAPER ROLLER BEARING	2	
8	24141-302090	BEARING	2	
9	TA00038359B	FINAL RING GEAR	1	
10	TA00038354A	LOCK NUT	2	
11	24101-062084	Bearing, Ball (#6208)	4	
12	TA00038394C	FINAL_REAR_PINION(L)	1	
13	22252-000800	RING, CIRCLIP (Φ 80)	2	
14	22217-140000	WASHER, SPRING (Φ 14)	18	
15	26716-140002	NUT	4	
16	FT08110000A4	BOLT(M14X42)	6	
17	TA00038428B	BOLT	8	
18	FB80120000A4	STUD BOLT(M14X38)	4	
19	22312-100180	PIN, DOWEL (10-18)	4	
20	TT85150000A4	Bolt	4	
21	TB29430000A4	WASHER	16	
22	TB29420000A4	NUT M14	4	
23	TB29440000A4	BOLTM14X35	12	
24	TA00047839A	REAR AXLE ASSY	2	

FIG C083 3015H	BRAKE	Year/Month 2020/01

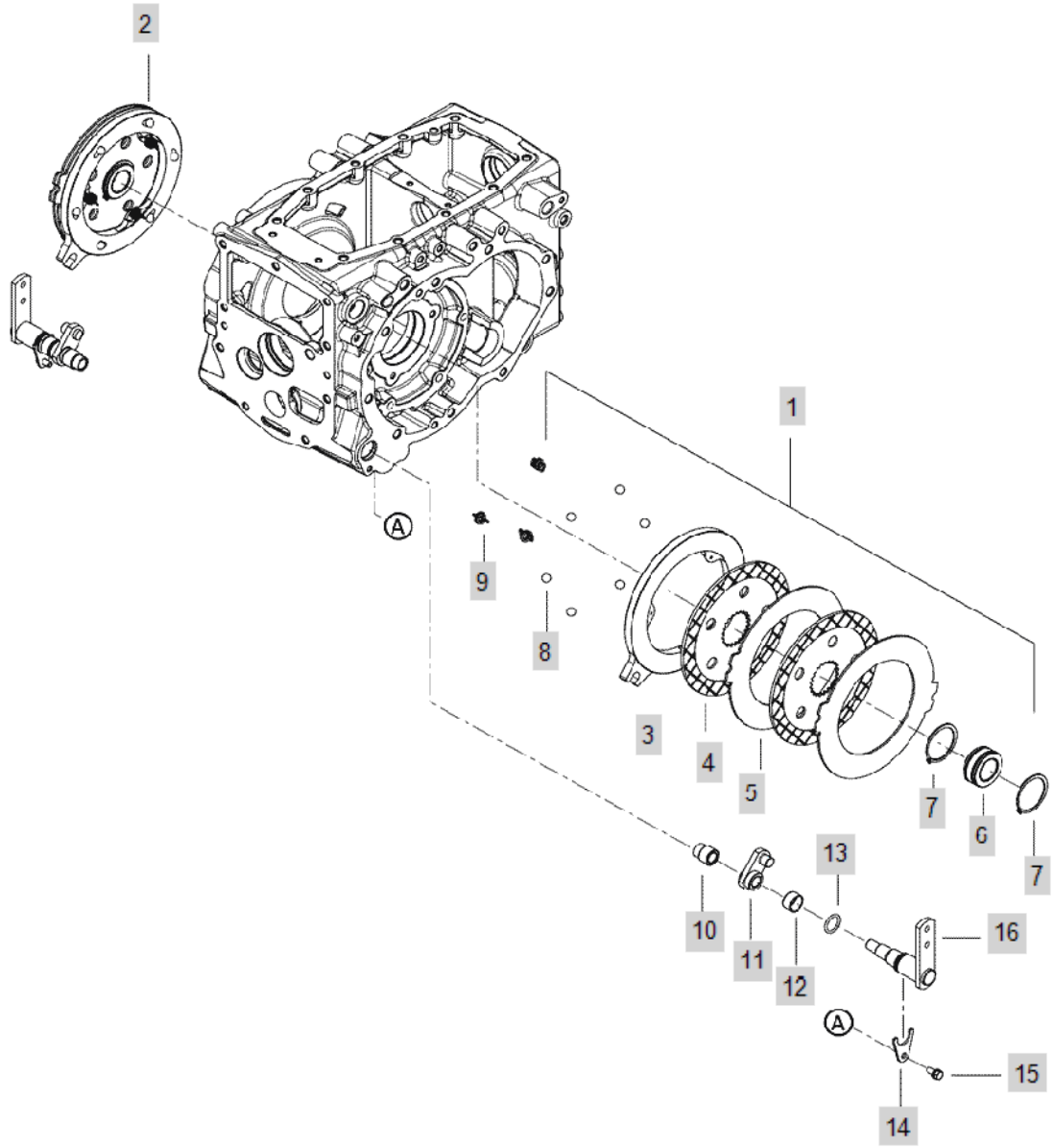

FIG C083 3015H	BRAKE	Year/Month 2020/01

KeyNo.	Part Number	Part Name	Quantity	Other
1	TA00038592A	BRAKE ASS`Y (LH)	1	
2	TA00038593A	BRAKE ASS`Y (RH)	1	
3	TA00038520A	CAM PLATE (LH)	1	
3	TA00038521A	CAM PLATE (RH)	1	
4	TA00038495A	DISK	4	
5	TA00038493A	PRESSURE PLATE	4	
6	TA00038494A	BOSS	2	
7	22242-000580	SNAP RING	4	
8	24190-160001	BALL,STEEL	12	
9	TN50070000A4	SPRING	6	
10	TA00038463C	BRAKE LEVER BUSHING	2	
11	TA00038466C	BRAKE INNER ARM	2	
12	24550-025150	BUSH 25X15	2	
13	24311-000250	O-RING, DYNAMIC (Φ25)	2	
14	TA00038470A	PLATE	2	
15	26013-080182	SCREW,CAPTIVEWASHERCAP	2	
16	TA00038474E	BRAKE LEVER	2	

FIG C090 3015H	BRAKE PEDAL	Year/Month 2020/01

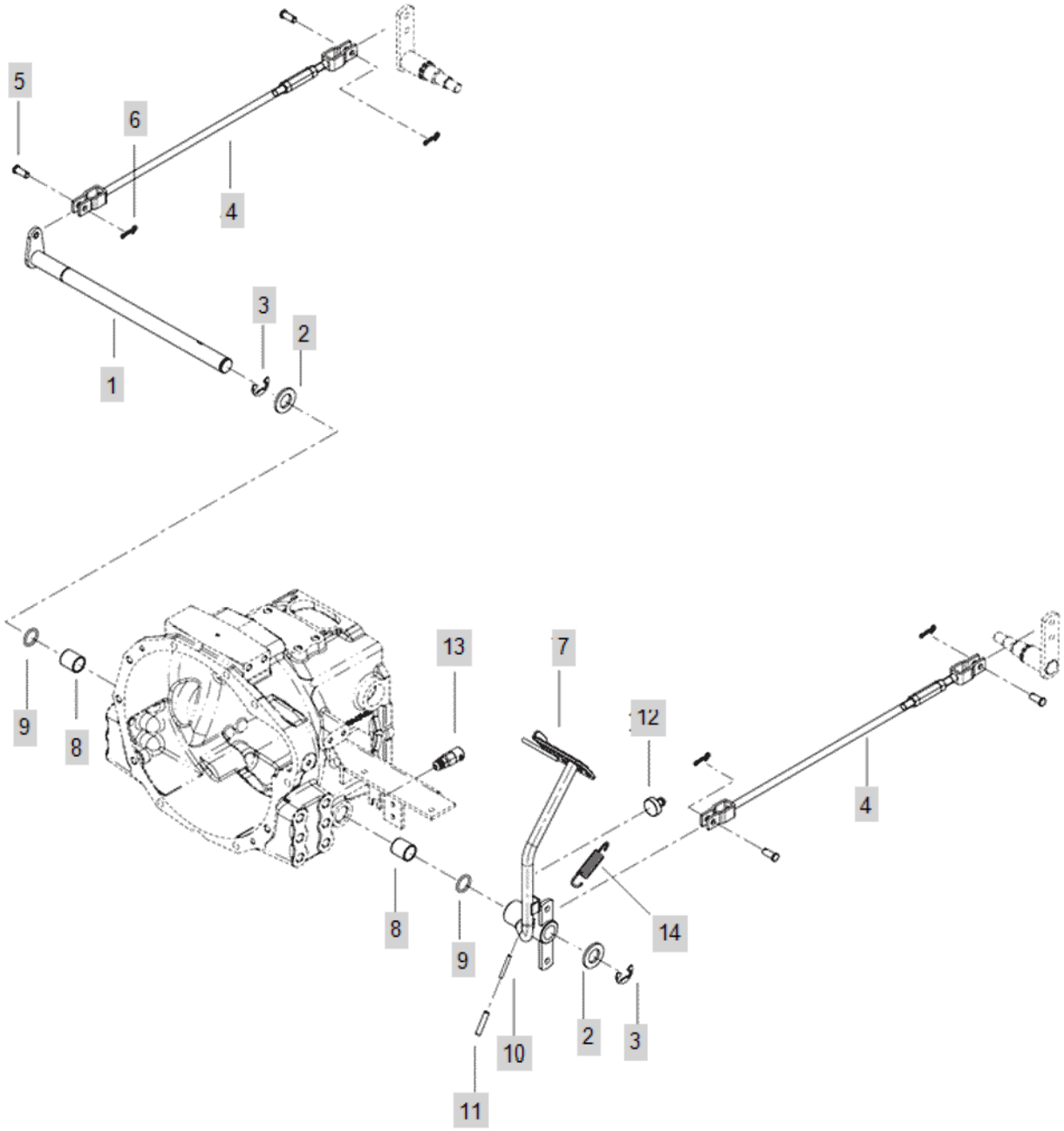

FIG C090 3015H	BRAKE PEDAL	Year/Month 2020/01

KeyNo.	Part Number	Part Name	Quantity	Other
1	TA00042448A	SHAFT, PEDAL ROD	1	
2	22137-240000	WASHER, PLAIN (Φ 24)	2	
3	22272-000190	RING, CIRCLIP (Φ 19)	2	
4	TA00038925A	ROD ASSY	2	
5	22487-100200	PIN, HEAD (10-20)	4	
6	RR51230000C	SNAP PIN	4	
7	TA00042446B	HST PEDAL(L), BRAKE	1	
8	24550-025300	DRY BUSH	2	
9	24311-000250	O-RING, DYNAMIC (Φ25)	2	
10	22351-050040	PIN, SPRING (5-04)	1	
11	22351-080040	PIN, SPRING (8-40)	1	
12	TA00016153A	RUBBER STOPER	1	
13	TZC5110000A3	STOPLAMPSWITCH	1	
14	TC73090000A4	RETURN SPRING	1	

FIG C091 3015H	PARKING BRAKE	Year/Month 2020/01

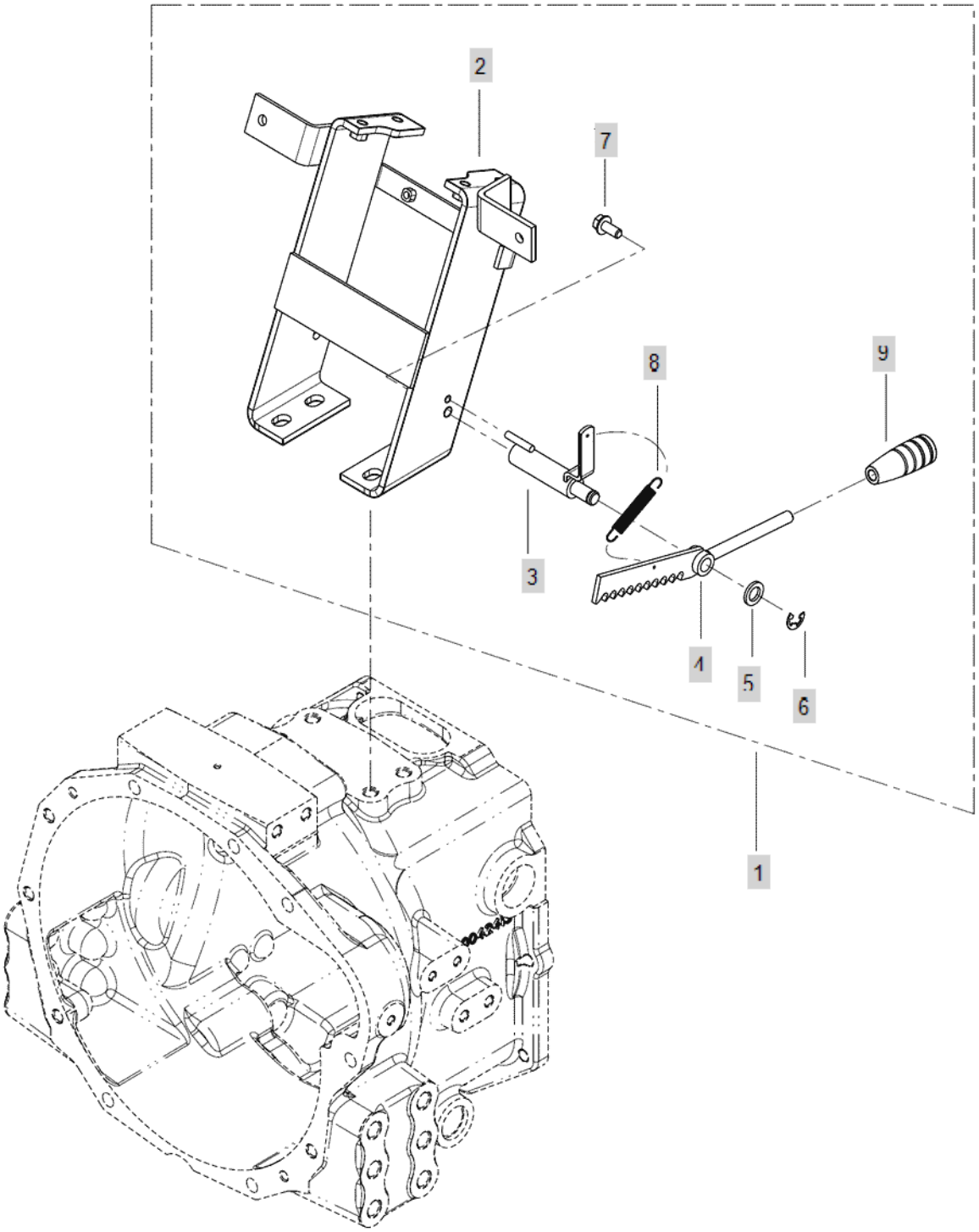

FIG C091 3015H	PARKING BRAKE	Year/Month 2020/01

KeyNo.	Part Number	Part Name	Quantity	Other
1	TA00043179A	SUPPORT ASSY, STEERING	1	
2	TA00039159E	SUPPROT, STEERING	1	
3	TA00043146A	SHAFT ASSY	1	
4	TA00043102A	LEVER, PARKING BRAKE	1	
5	22151-060000		1	
5-1	22117-120000	WASHER, PLAIN (Φ 12)	1	
6	26106-060122	HEX BOLT (6-12)	1	
6-1	22272-000100	RING, CIRCLIP (Φ 10)	1	
7	26106-080182	SCREW,HEXFLANGEHEADCAP	1	
8	TT98200000A4	RETURNSPRING	1	
9	VD05460000A4	LEVER(BLACK)	1	

FIG C092A 3015H	HYD PUMP	Year/Month 2020/01

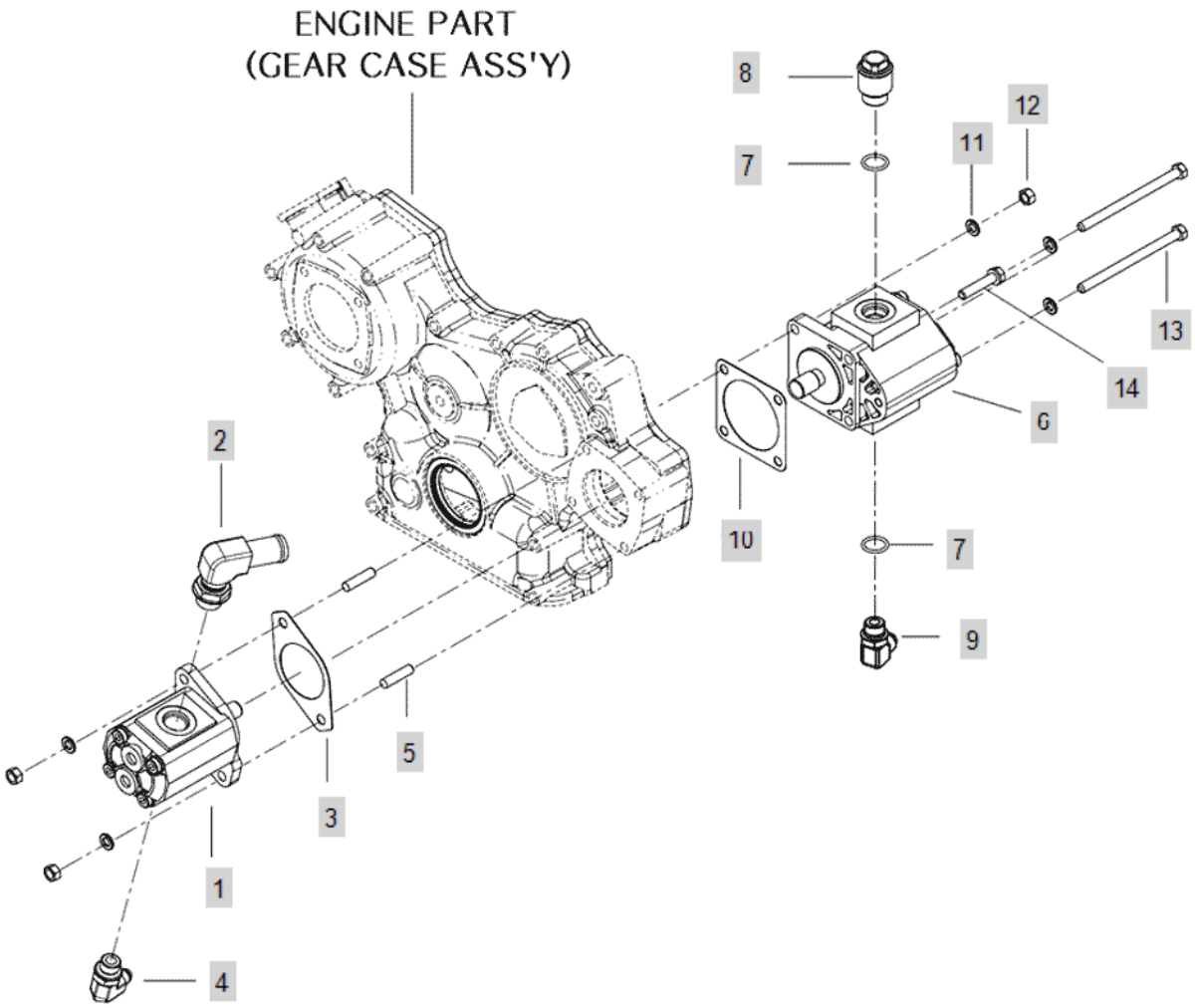

FIG C092A 3015H	HYD PUMP	Year/Month 2020/01

KeyNo.	Part Number	Part Name	Quantity	Other
1	TA00039797A	HYD PUMP	1	
2	TRC9140000A3	ELBOW	1	
3	TZG1700000A4	PACKING	1	
4	NT34620000A4	ELBOW	1	
5	26216-080222	Bolt, Stud (8-22)	2	
6	TA00001404A	HYD PUMP 13CC	1	
7	24311-000180	O-RING, DYNAMIC (Φ18)	2	
8	TCC9040000A4	JOINT M22	1	
9	TA00039579A	ELBOW	1	
10	HH02080000A4	PACKING,HYD.PUMP	1	
11	22217-080000	WASHER, SPRING (Φ 08)	5	
12	26716-080002	NUT,HEX (D8)	3	
13	26116-081152	HEX BOLT	2	
14	26013-080402	Bolt, Hexa (8-40)	1	

FIG C093 3015H	HYD SHIFT TRANSMISSION PEDAL	Year/Month 2020/01

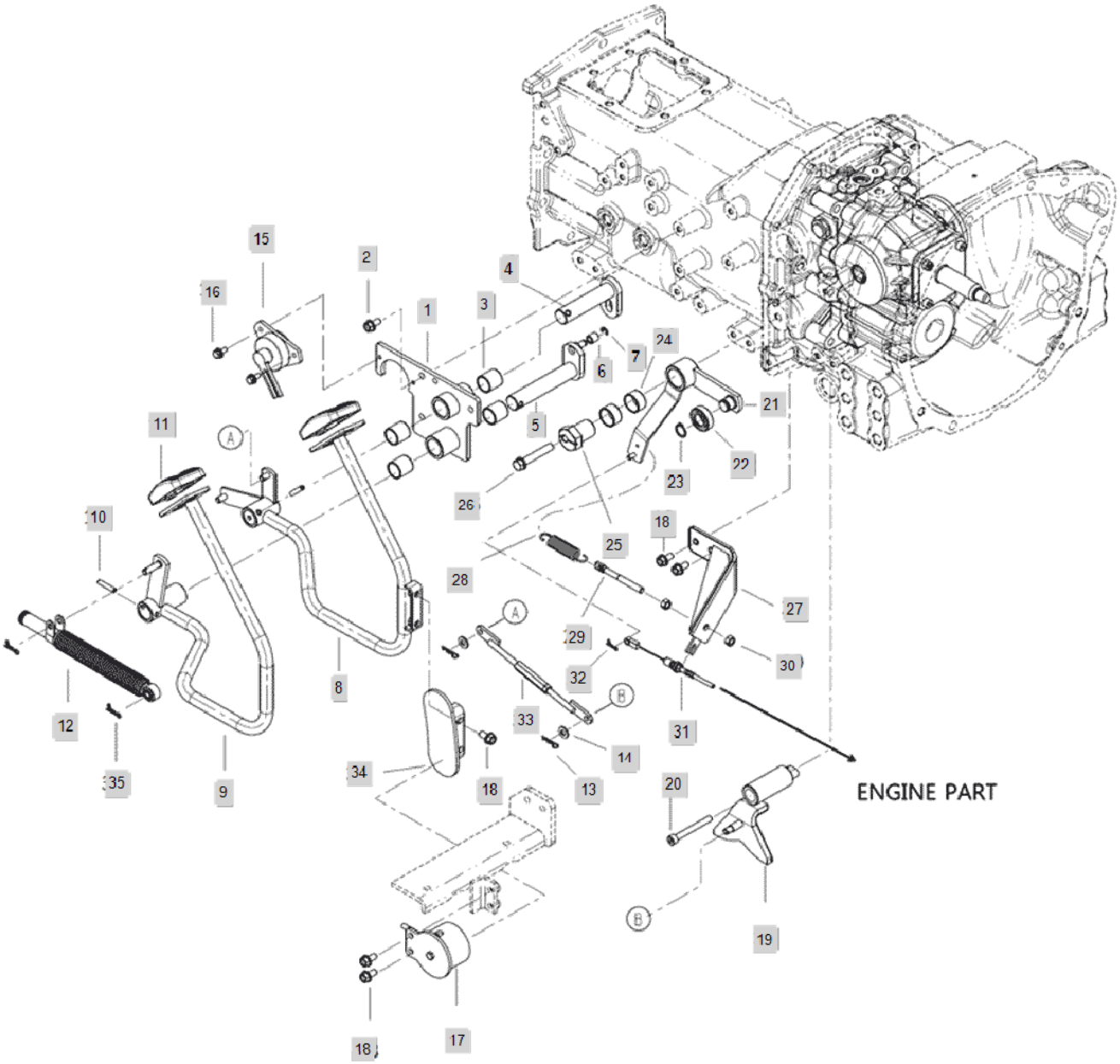

FIG C093 3015H	HYD SHIFT TRANSMISSION PEDAL	Year/Month 2020/01

KeyNo.	Part Number	Part Name	Quantity	Other
1	TA00042565B	BRACKET ASSY	1	
2	26106-080182	SCREW,HEXFLANGEHEADCAP	3	
3	24550-022250	BUSH	4	
4	TA00042599B	SHAFT ASSY(F)	1	
5	TA00042600B	SHAFT ASSY(R)	1	
6	TA00033126A	ROLLER	1	
7	22272-000060	RING, CIRCLIP (Φ 06)	1	
8	TA00042563B	HST ASSY PEDAL(F)	1	
9	TA00042564B	HST ASSY PEDAL(B)	1	
10	22351-060030	PIN, SPRING (6-30)	2	
11	TA00001508A	PEDAL COVER	2	
12	RA00007052A	OIL DAMPER(HANIL)	1	
13	RR64050000B	SNAP PIN 8	2	
14	22137-080000	WASHER, PLAIN (Φ 08)	2	
15	TCD9110000B2	SWITCH ASS'Y	1	
16	26014-060162	Bolt, Hexa (6-16)	2	
17	HA00000037A	CRUISE MAGNET	1	
18	26016-080162	HEX BOLT WITH WASHER	6	
19	TA00042569A	JOINT	1	
20	26450-080702	BOLT	1	
21	TA00042567A	BRACKET ASSY	1	
22	24104-060034	Bearing, Ball (#6003) Dubble Cap	1	
23	22242-000170	SNAP RING, SHAFT (Φ 17)	1	
24	24550-025150	BUSH 25X15	2	
25	TA00001830C	SHAFT	1	
26	26013-100602	BOLT	1	
27	TA00043738A	HOLDER ASSY, SPRING	1	
28	CA45140000A4	SPRING2.3X17.3X74	1	
29	CE78050000A4	BOLT	1	
30	26716-080002	NUT,HEX (D8)	2	
31	TA00043014A	WIRE ASSY	1	
32	RR47070000B4	PIN 6, COME-OFF SNAP	1	
33	TA00043810A	HST ROD ASSY	1	
34	TA00043533B	BRACKET	1	
35	RR64050000B	SNAP PIN 8	2	

FIG C101-1 3015H	CASE, HYD CYLINDER	Year/Month 2020/01

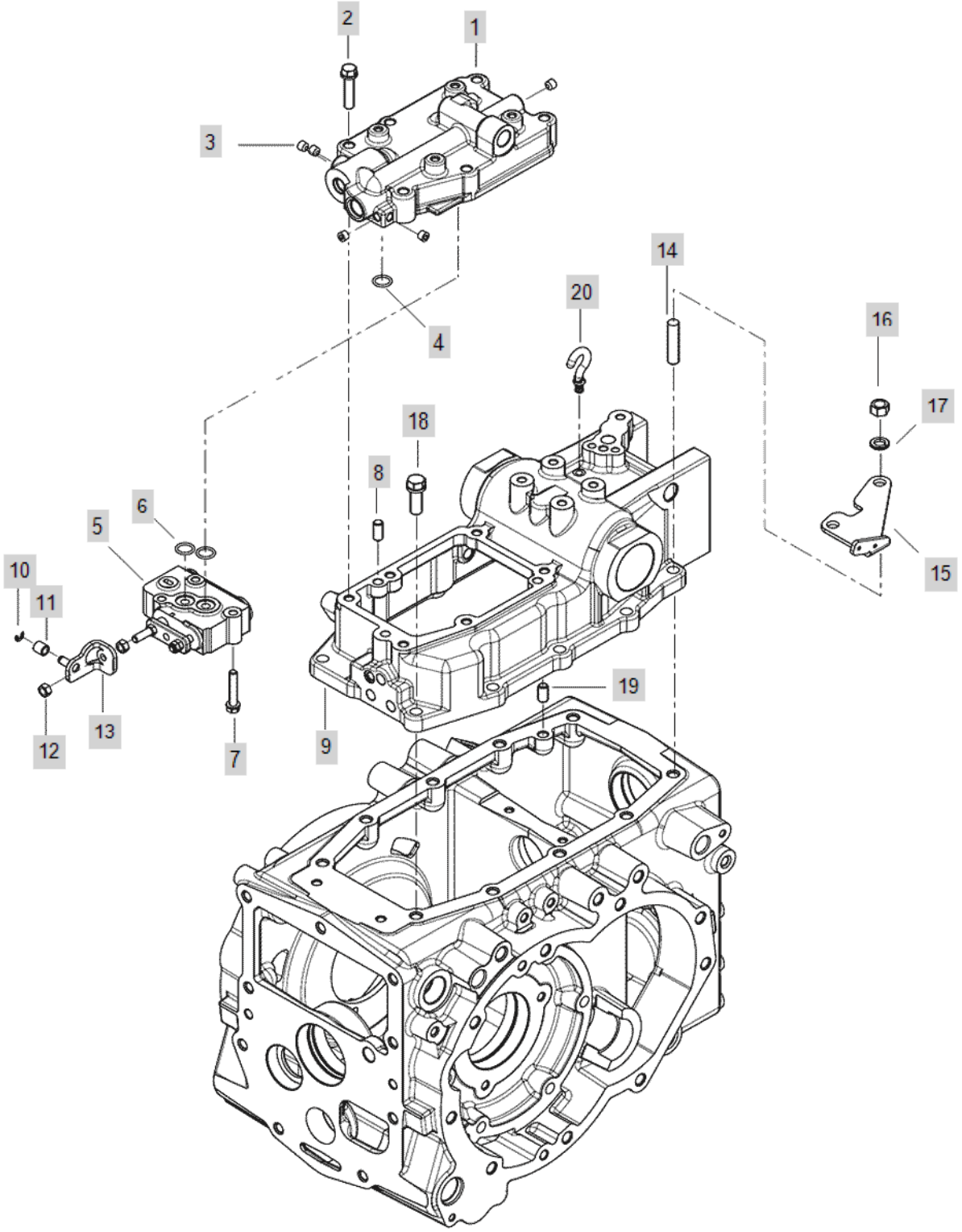

FIG C101-1 3015H	CASE, HYD CYLINDER	Year/Month 2020/01

KeyNo.	Part Number	Part Name	Quantity	Other
1	TA00033096D	COVER, HYD CYLINDER	1	
2	26013-100452	HEX BOLT W/WASHER	6	
3	23871-010000	PLUG	5	
4	24311-000120	O-RING, DYNAMIC (Φ12)	1	
5	TA00033098A	CONTROL VALVE	1	
6	24315-000160	O-RING	2	
7	26043-080452	BOLT W/WASHER	3	
8	22312-100200	PIN, DOWEL (10-20)	2	
9	TA00033085E	HYD CYLINDER CASE	1	
10	22272-000060	RING, CIRCLIP (Φ 06)	1	
11	TA00033126A	ROLLER	1	
12	26711-080002	NUT	2	
13	TA00034000C	CLEVIS AS'Y	1	
14	26216-120352	STEELBOLT	5	
15	TA00034079B	BRACKET, SWITCH	1	
16	22217-120000	WASHER, SPRING (Φ 12)	5	
17	26716-120002	BOLT,CYLINDER HEAD(B)	5	
18	26013-120352	SCREW,CAPTIVEWASHERCAP	5	
19	22312-100180	PIN, DOWEL (10-18)	1	
20	TA00019614A	CAP	1	

FIG C101-2 3015H	CASE, HYD CYLINDER(2016.06)	Year/Month 2020/01

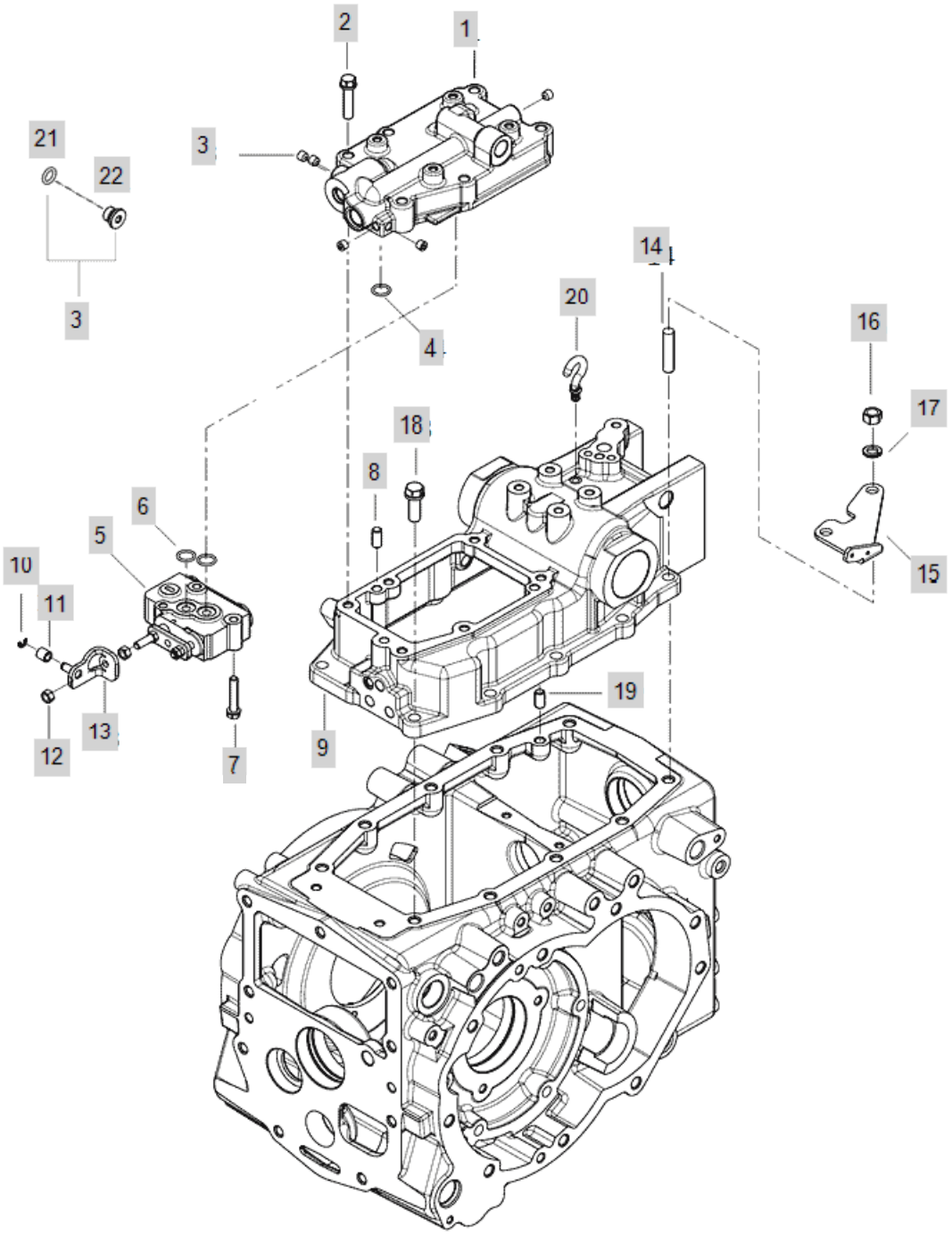

FIG C101-2 3015H	CASE, HYD CYLINDER(2016.06)	Year/Month 2020/01

KeyNo.	Part Number	Part Name	Quantity	Other
1	TA00033096D	COVER, HYD CYLINDER	1	
2	26013-100452	HEX BOLT W/WASHER	6	
3	TA00045690A	PLUG ASS'Y	5	
4	24311-000120	O-RING, DYNAMIC (Φ12)	1	
5	TA00033098A	CONTROL VALVE	1	
6	24315-000160	O-RING	2	
7	26043-080452	BOLT W/WASHER	3	
8	22312-100200	PIN, DOWEL (10-20)	2	
9	TA00033085E	HYD CYLINDER CASE	1	
10	22272-000060	RING, CIRCLIP (Φ 06)	1	
11	TA00033126A	ROLLER	1	
12	26711-080002	NUT	2	
13	TA00034000C	CLEVIS AS'Y	1	
14	26216-120352	STEELBOLT	5	
15	TA00034079B	BRACKET, SWITCH	1	
16	22217-120000	WASHER, SPRING (Φ 12)	5	
17	26716-120002	BOLT,CYLINDER HEAD(B)	5	
18	26013-120352	SCREW,CAPTIVEWASHERCAP	5	
19	22312-100180	PIN, DOWEL (10-18)	1	
20	TA00019614A	CAP	1	
21	24311-000080	O-RING, DYNAMIC (Φ8)	5	
22	TA00045685A	PLUG	5	

FIG C104 3015H	PISTON ASS'Y	Year/Month 2020/01

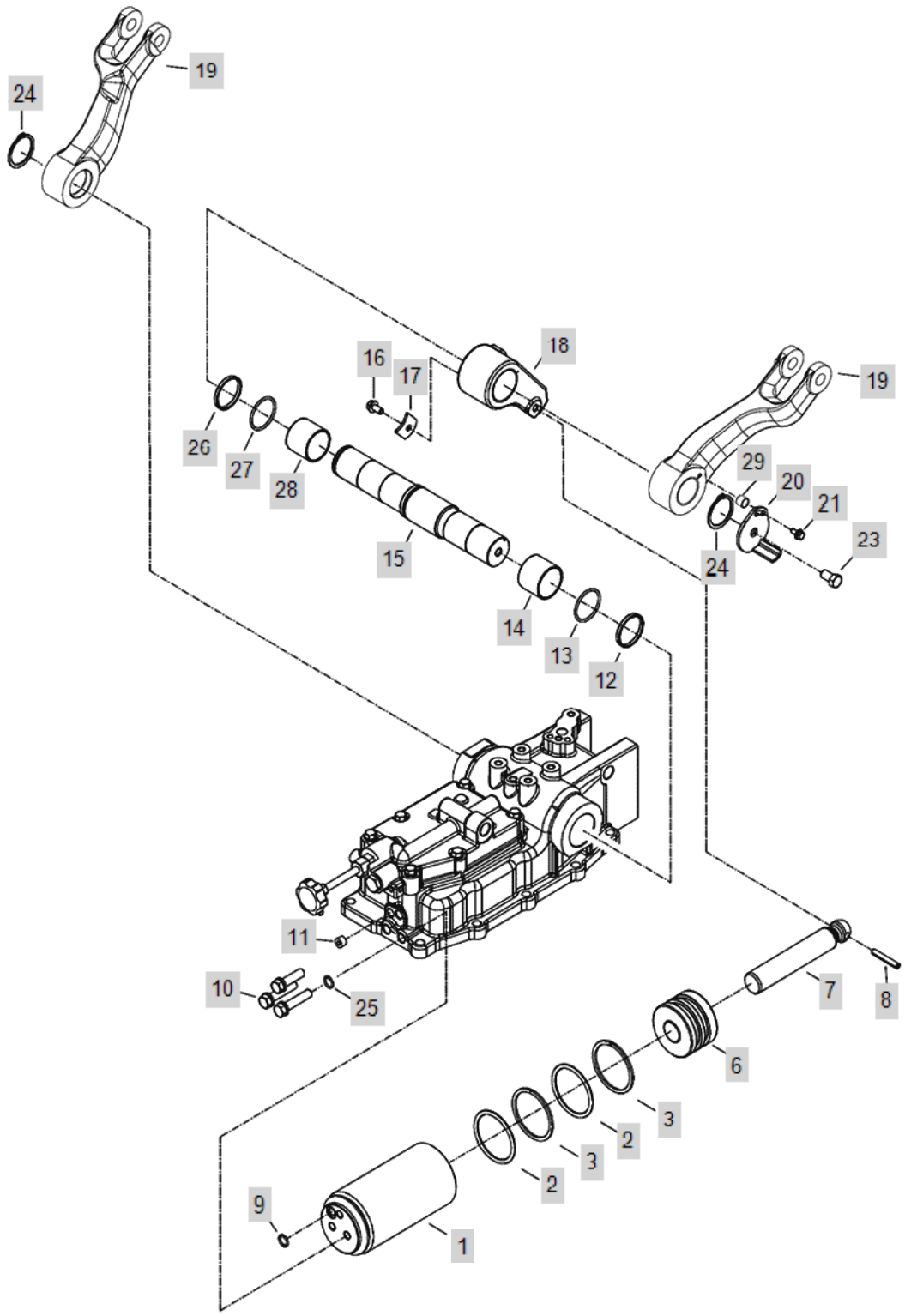

FIG C104 3015H	PISTON ASS'Y	Year/Month 2020/01

KeyNo.	Part Number	Part Name	Quantity	Other
1	TA00034002A	CYLINDER ASSY	1	
2	TA00034006A	O-RING	2	
3	TA00034007A	BACK UP RING	2	
6	TA00034005A	PISTON	1	
7	TA00033094A	ROD, PISTON	1	
8	22351-080050	PIN, SPRING (8-50)	1	
9	24311-000140	O-RING, DYNAMIC (Φ14)	1	
10	26156-120552	HEXAGON HEAD BOLT	3	
11	23871-010000	PLUG	1	
12	TA00035651A	RING	1	
13	24321-000500	O-RING (D50)	1	
14	TA00035650A	BUSH	1	
15	TA00033089C	SHAFT, LIFT LINK	1	
16	26106-080162	SCREW,HEXFLANGEHEADCAP	1	
17	TA00033095A	PLATE	1	
18	TA00033093B	CRANK, LIFT	1	
19	TA00040302A	LIFT ARM	2	
20	TA00034082C	CAMP ASSY	1	
21	26106-060202	HEXFLANGEBOLT	1	
23	26106-100202	HEX BOLT, (10-20)	1	
24	22242-000450	SNAP RING, SHAFT (Φ 45)	2	
25	TA00035675A	BONDED SEAL	3	
26	TA00033100A	RING, BACK UP	1	
27	24321-000450	O-RING, DYNAMIC (Φ45)	1	
28	TA00033099A	BUSH	1	
29	TA00035684A	COLLAR	1	

FIG C108 3015H	SAFETY VALVE	Year/Month 2020/01

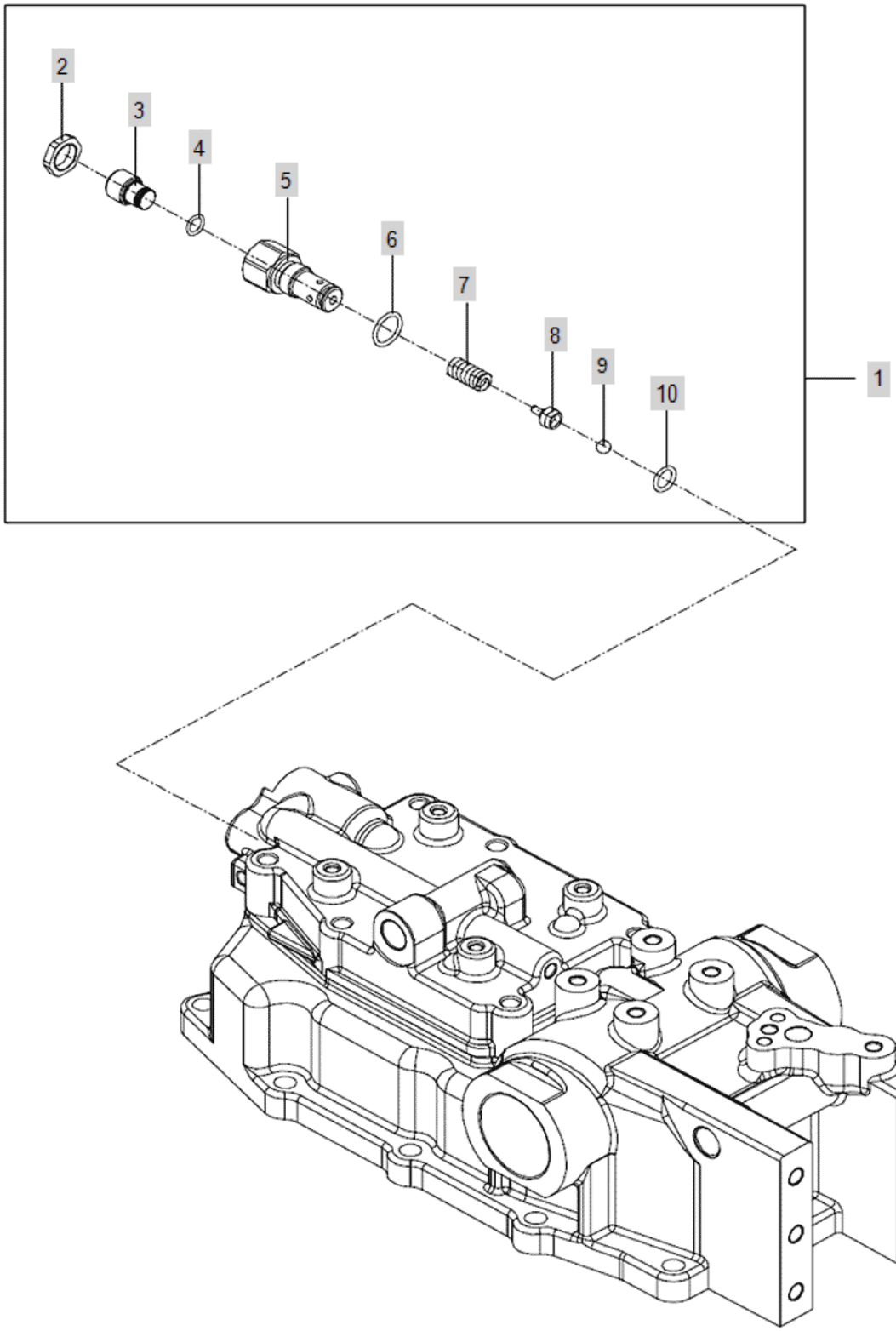

FIG C108 3015H	SAFETY VALVE	Year/Month 2020/01

KeyNo.	Part Number	Part Name	Quantity	Other
1	TA00036187A	SAFETY VALVE	1	
2	TA00036419A	NUT	1	
3	TA00036418A	BOLT	1	
4	24315-000100	O-RING	1	
5	TA00036392A	BODY, SAFETY VALVE	1	
6	24315-000180	O-RING(PTYPE)	1	
7	TA00036420A	SPRING	1	
8	TA00036417A	BALL GUIDE	1	
9	24190-100001	Ball, Steel (5/16)	1	
10	24315-000125	O-RING(P-TYPE)	1	

FIG C109 3015H	STOP VALVE	Year/Month 2020/01

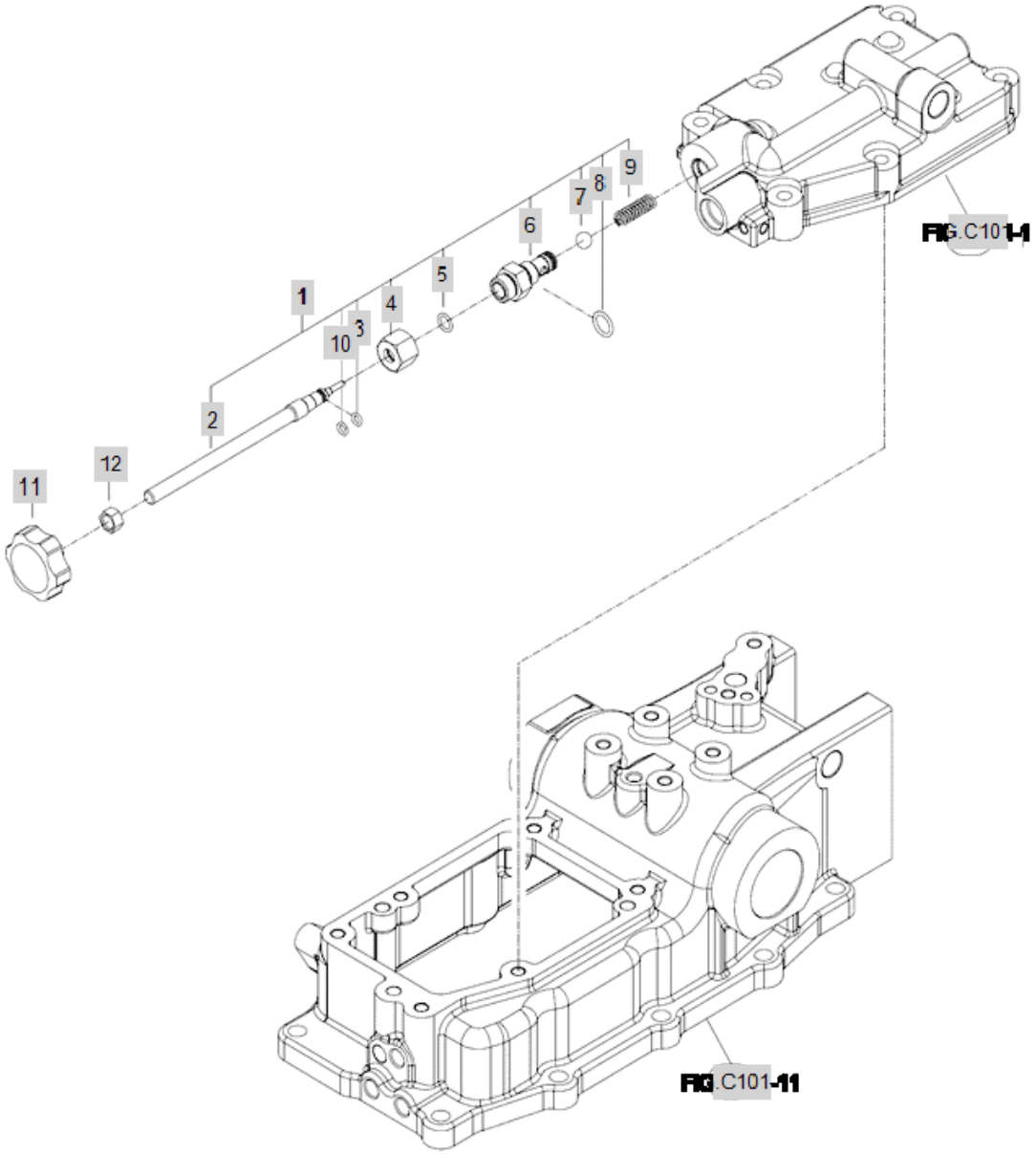

FIG C109 3015H	STOP VALVE	Year/Month 2020/01

KeyNo.	Part Number	Part Name	Quantity	Other
1	TA00033887B	FLOW REGULATOR ASSY	1	
2	TA00033889B	SCREW	1	
3	24315-000060	O RING	1	
4	TA00033888A	NUT	1	
5	24311-000100	O-RING, DYNAMIC (Φ10)	1	
6	TA00033890B	BODY	1	
7	24190-140001	STEEL BALL	1	
8	24311-000140	O-RING, DYNAMIC (Φ14)	1	
9	TA00034091B	SPRING, LOCKING VALVE	1	
10	TA00036537A	RING, BACK UP	1	
11	TTA9040000A4	KNOB	1	
12	26716-100002	Nut, Hexa (Φ10)	1	
FIG.C101-1	C101-2		1	
FIG.C101-11	C101-2		1	

FIG C111.1 3015H	HYD CONTROL POSITION TYPE	Year/Month 2020/01

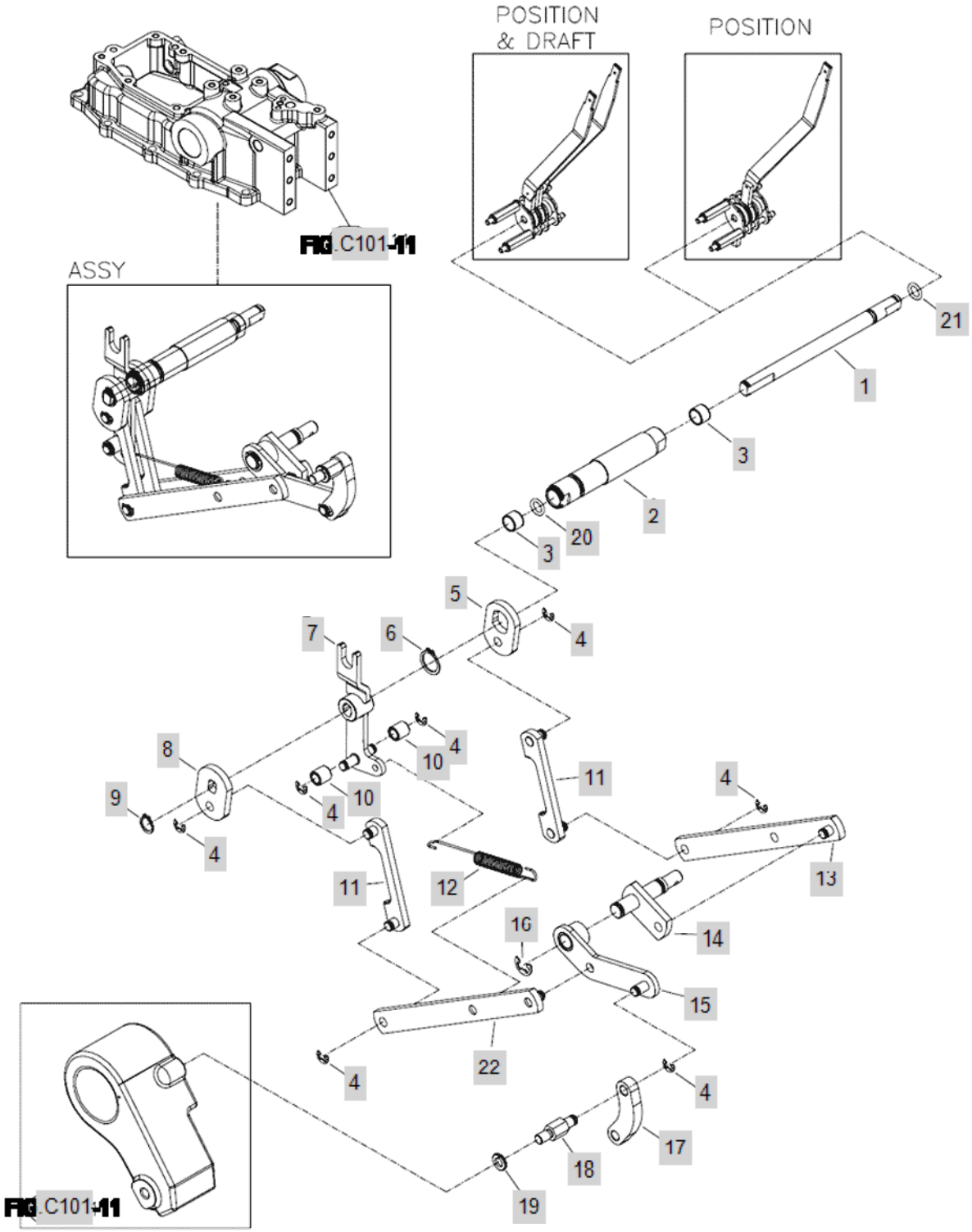

FIG C111.1 3015H	HYD CONTROL POSITION TYPE	Year/Month 2020/01

KeyNo.	Part Number	Part Name	Quantity	Other
1	TA00033128B	SHAFT	1	
2	TA00033127B	SHAFT	1	
3	24550-012100	BUSH	2	
4	22272-000060	RING, CIRCLIP (Φ 06)	7	
5	TA00033119A	CONTROL PLATE, DRAFT	1	
6	22242-000180	SNAP RING, SHAFT (Φ 18)	1	
7	TA00033121B	LINK ASSY, CONNECTING	1	
8	TA00033120A	CONTROL PLATE, POSITION	1	
9	22242-000120	SNAP RING, SHAFT (Φ 12)	1	
10	TA00033126A	ROLLER	2	
11	TA00033117B	LINK ASSY B	2	
12	TA00033902C	SPRING	1	
13	TA00033111B	CONTROL LINK. DRAFT LOAD	1	
14	TA00033108B	LINK ASSY (IN)	1	
15	TA00033106B	FEED BACK LINK, POSTION	1	
16	22272-000090	RING, CIRCLIP (Φ 09)	1	
17	TA00033102B	LINK, LIFT CRANK	1	
18	TA00033101A	LINK PIN, FEEDBACK	1	
19	22217-080000	WASHER, SPRING (Φ 08)	1	
20	24311-000160	O-RING, DYNAMIC (Φ16)	1	
21	24311-240100	SEAL, O-RING	1	
22	TA00033114C	LINK, POSITION	1	
FIG.C101-11	C101-2		2	

FIG C111.2 3015H	HYD CONTROL POSITION TYPE	Year/Month 2020/01

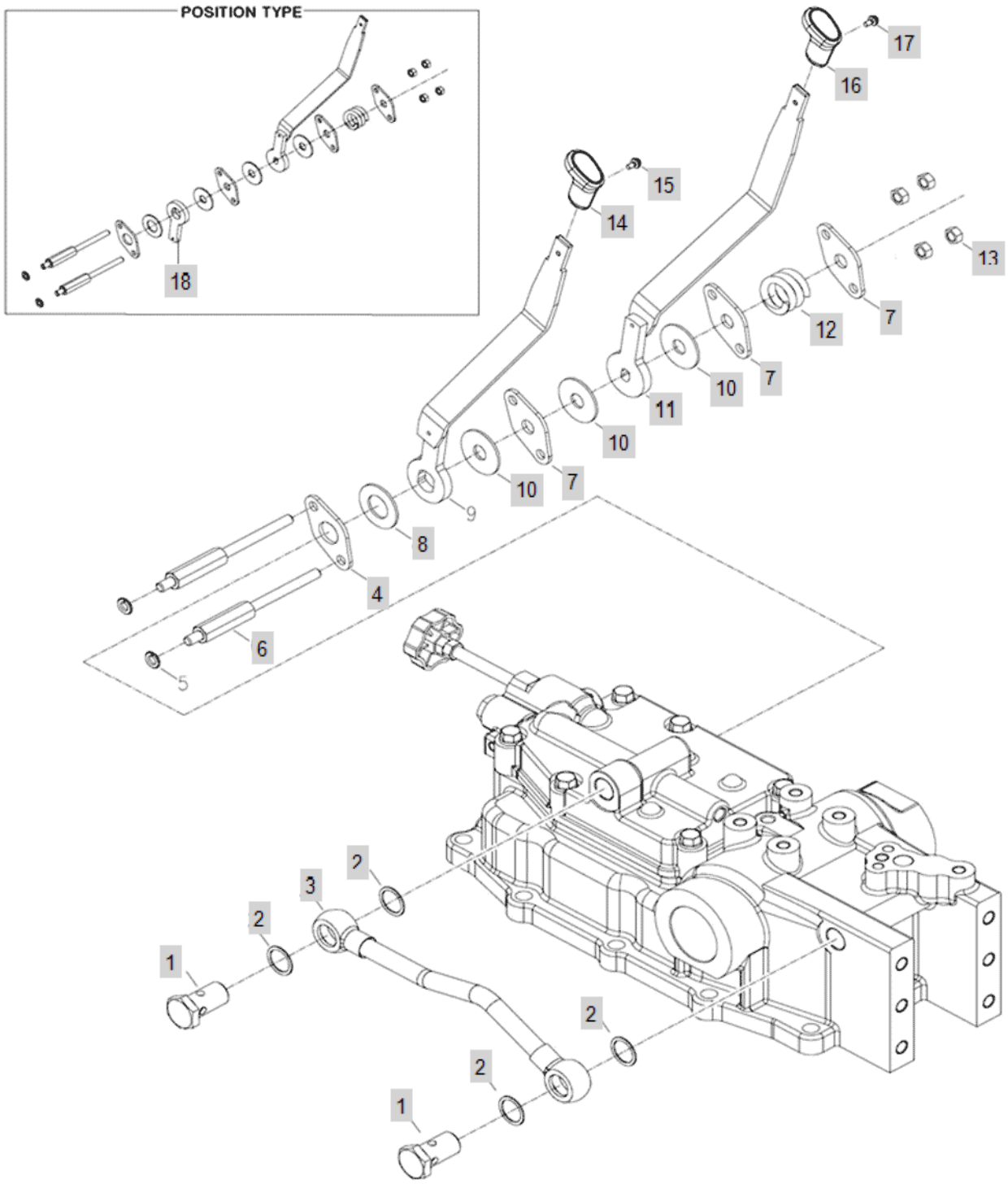

FIG C111.2 3015H	HYD CONTROL POSITION TYPE	Year/Month 2020/01

KeyNo.	Part Number	Part Name	Quantity	Other
1	TTB4180000A4	BOLT	2	
2	TA00036405A	BONDED SEAL	4	
3	TA00034085B	MOUNTING SUPPORT	1	
4	TA00033964A	BRACKET	1	
6	TA00033978A	BOLT	2	
7	TA00033965A	BRACKET A	3	
8	TA00033155A	FRICTION PLATE	1	
10	TA00033966A	PLATE A	3	
11	TA00042363A	POSITION LEVER ASSY(US)	1	
12	TA00033901A	SPRING	1	
13	26716-080002	NUT,HEX (D8)	4	
14	TA00015806A	LEVER, D-CONTROL	1	
15	26023-040102	SCREW W/WASHER	1	
16	TA00015831A	KNOB, POSITION CONTROL	1	
17	26023-040162	SCREW	1	
18	TA00033156A	LEVER ARM, DRAFT	1	

FIG C113 3015H	DRAFT CONTROL	Year/Month 2020/01

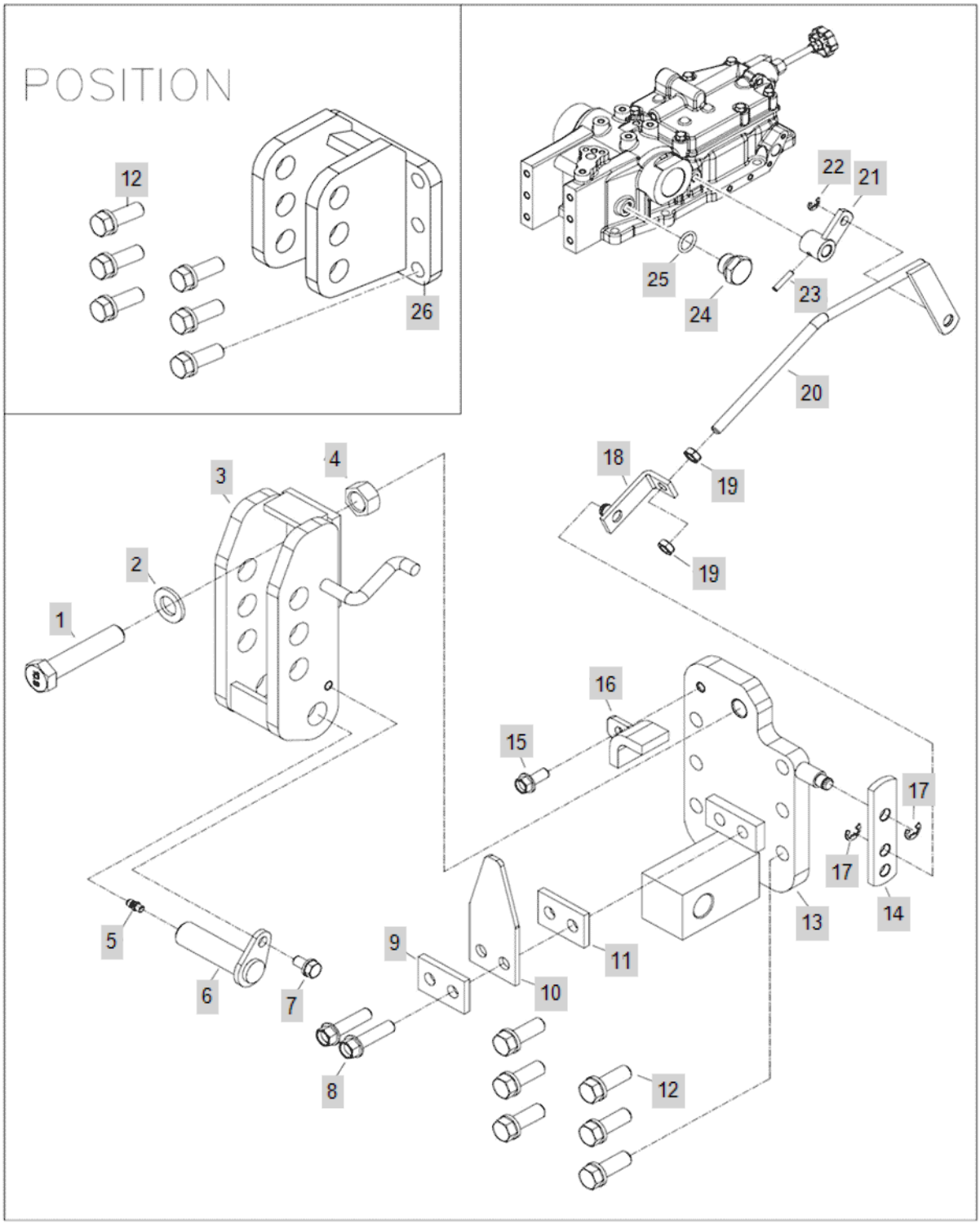

FIG C113 3015H	DRAFT CONTROL	Year/Month 2020/01

KeyNo.	Part Number	Part Name	Quantity	Other
1	TA00000660A	BOLT	1	
2	22137-160000	WASHER, PLAIN (Φ 16)	1	
3	TA00033138B	HINGE D, TOP LINK	1	
4	26736-160002	HEXNUT	1	
5	TA27160000A4	GREASE NIPPLE	1	
6	TTB3090000A4	PIN,HINGE	1	
7	26013-080162	Bolt, Hexa (8-16)	1	
8	26106-100402	SCREW,HEXFLANGEHEADCAP	2	
9	TA00034144A	PLATE	1	
10	TA00033137A	PLATE, HINGE	1	
11	TA00034144A	PLATE	1	
12	26013-120352	SCREW,CAPTIVEWASHERCAP	6	
13	TA00034018B	SUPPORT D, HINGE ASS'Y	1	
14	TA00033143B	PLATE	1	
15	26106-080202	SQR FLANGE BOLT	1	
16	TA00034142B	PLATE ASS'Y	1	
17	22272-000080	RING, CIRCLIP (Φ 08)	2	
18	TA00033144B	PLATE ASSY	1	
19	26756-080002	NUT	2	
20	TA00033150B	CONTROL ROD, DRAFT	1	
21	TA00033147B	LINK ASSY (OUT)	1	
22	22272-000060	RING, CIRCLIP (Φ 06)	1	
23	22351-040020	PIN, SPRING (4X20)	1	
24	NTA1130100A9		1	
25	24311-000140	O-RING, DYNAMIC (Φ14)	1	
26	TA00034323A	BRACKET ASS'Y, TOP LINK	1	

FIG C114A-1 3015H	HYD PIPING(2017.01)	Year/Month 2020/01

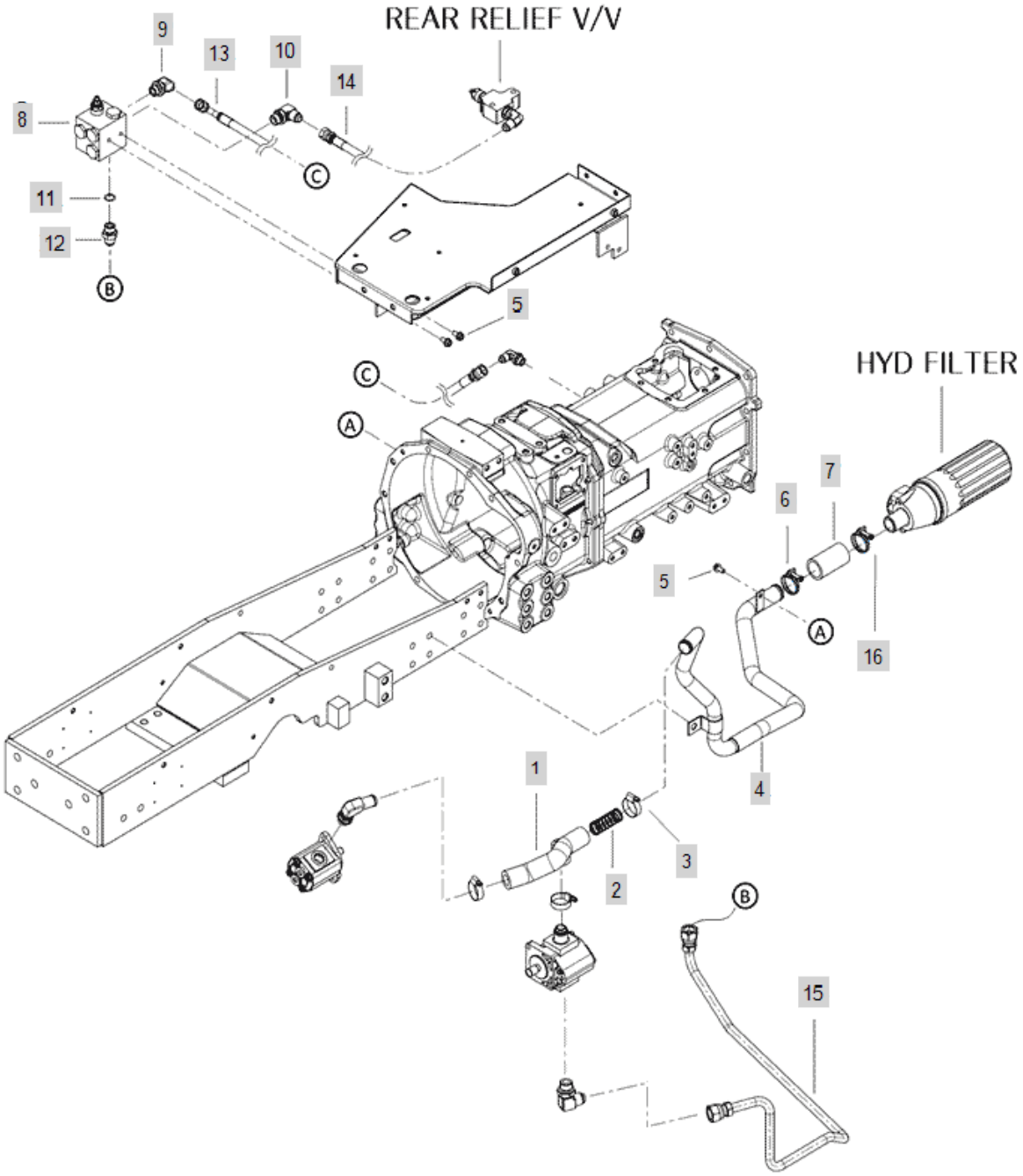

FIG C114A-1 3015H	HYD PIPING(2017.01)	Year/Month 2020/01

KeyNo.	Part Number	Part Name	Quantity	Other
1	TA00039695B	RUBBER HOSE	1	
2	TTB4360000A4	SPRINGA	1	
3	23000-041000	HOSECLAMP	3	
4	TA00046513A	PIPE	1	
5	26106-080162	SCREW,HEXFLANGEHEADCAP	3	
6	TA00045083A	HOSE BAND	1	
7	TA00040493B	HOSE	1	
8	TA00039335A	VALVE, FRONT	1	
9	FB34060000A4	ELBOW	1	
10	TA00039579A	ELBOW	1	
11	24311-000180	O-RING, DYNAMIC (Φ18)	1	
12	CVE4020000A4	NIPPLE	1	
13	TA00043503A	HOSE	1	
14	TA00043502B	HOSE	1	
15	TA00043812C	PIPE ASSY	1	
16	23010-044000	HOSEBAND	1	

FIG C114A-2 3015H	HYD PIPING	Year/Month 2020/01

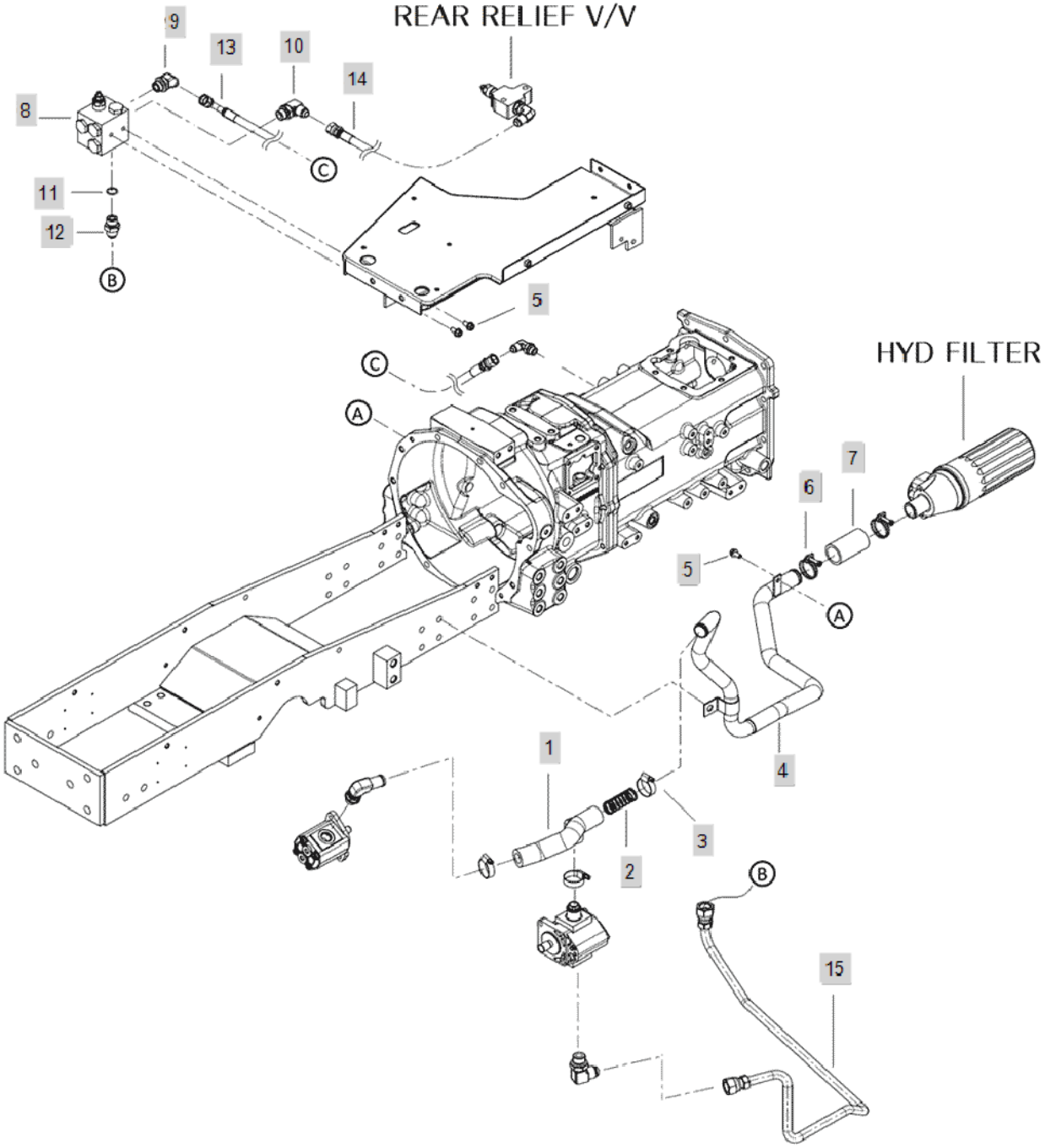

FIG C114A-2 3015H	HYD PIPING	Year/Month 2020/01

KeyNo.	Part Number	Part Name	Quantity	Other
1	TA00039695B	RUBBER HOSE	1	
2	TTB4360000A4	SPRINGA	1	
3	23000-041000	HOSECLAMP	3	
4	TA00039240A	PIPE	1	
5	26106-080162	SCREW,HEXFLANGEHEADCAP	3	
6	23010-040000	HOSEBAND	2	
7	TA00040493A	HOSE	1	
8	TA00039335A	VALVE, FRONT	1	
9	FB34060000A4	ELBOW	1	
10	TA00039579A	ELBOW	1	
11	24311-000180	O-RING, DYNAMIC (Φ18)	1	
12	CVE4020000A4	NIPPLE	1	
13	TA00043503A	HOSE	1	
14	TA00043502A	HOSE	1	
15	TA00043812A	PIPE ASSY	1	

FIG C114A-3 3015H	HYD PIPING	Year/Month 2020/01

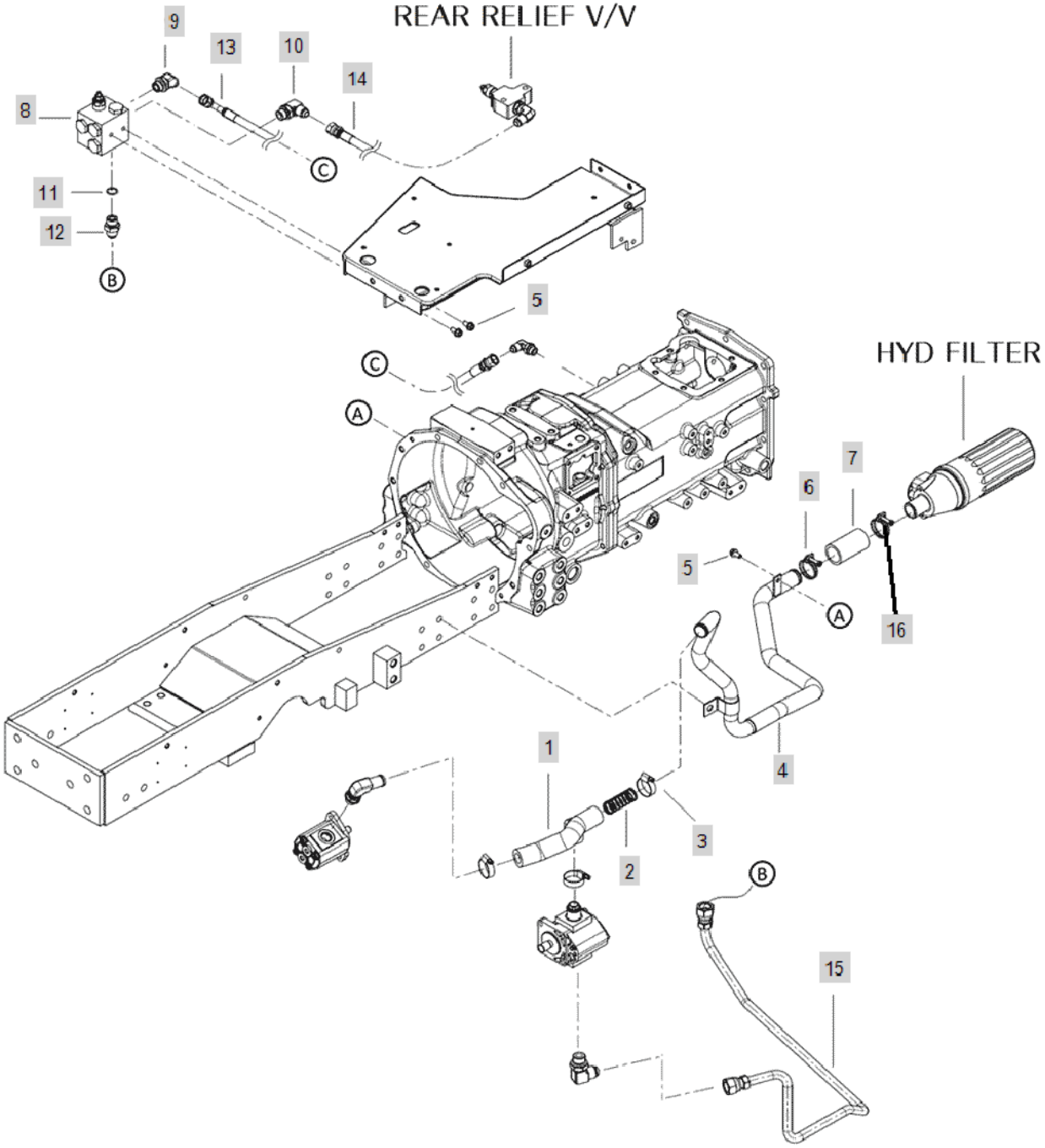

FIG C114A-3 3015H	HYD PIPING	Year/Month 2020/01

KeyNo.	Part Number	Part Name	Quantity	Other
1	TA00039695B	RUBBER HOSE	1	
2	TTB4360000A4	SPRINGA	1	
3	23000-041000	HOSECLAMP	3	
4	TA00046513C		1	
5	26106-080162	SCREW,HEXFLANGEHEADCAP	3	
6	TA00045083A	HOSE BAND	2	
7	TA00040493A	HOSE	1	
8	TA00039335A	VALVE, FRONT	1	
9	FB34060000A4	ELBOW	1	
10	TA00039579A	ELBOW	1	
11	24311-000180	O-RING, DYNAMIC (Φ18)	1	
12	CVE4020000A4	NIPPLE	1	
13	TA00043503A	HOSE	1	
14	TA00043502A	HOSE	1	
15	TA00043812A	PIPE ASSY	1	
16	23010-044000	HOSEBAND	1	

FIG C115 3015H	OIL COOLER	Year/Month 2020/01

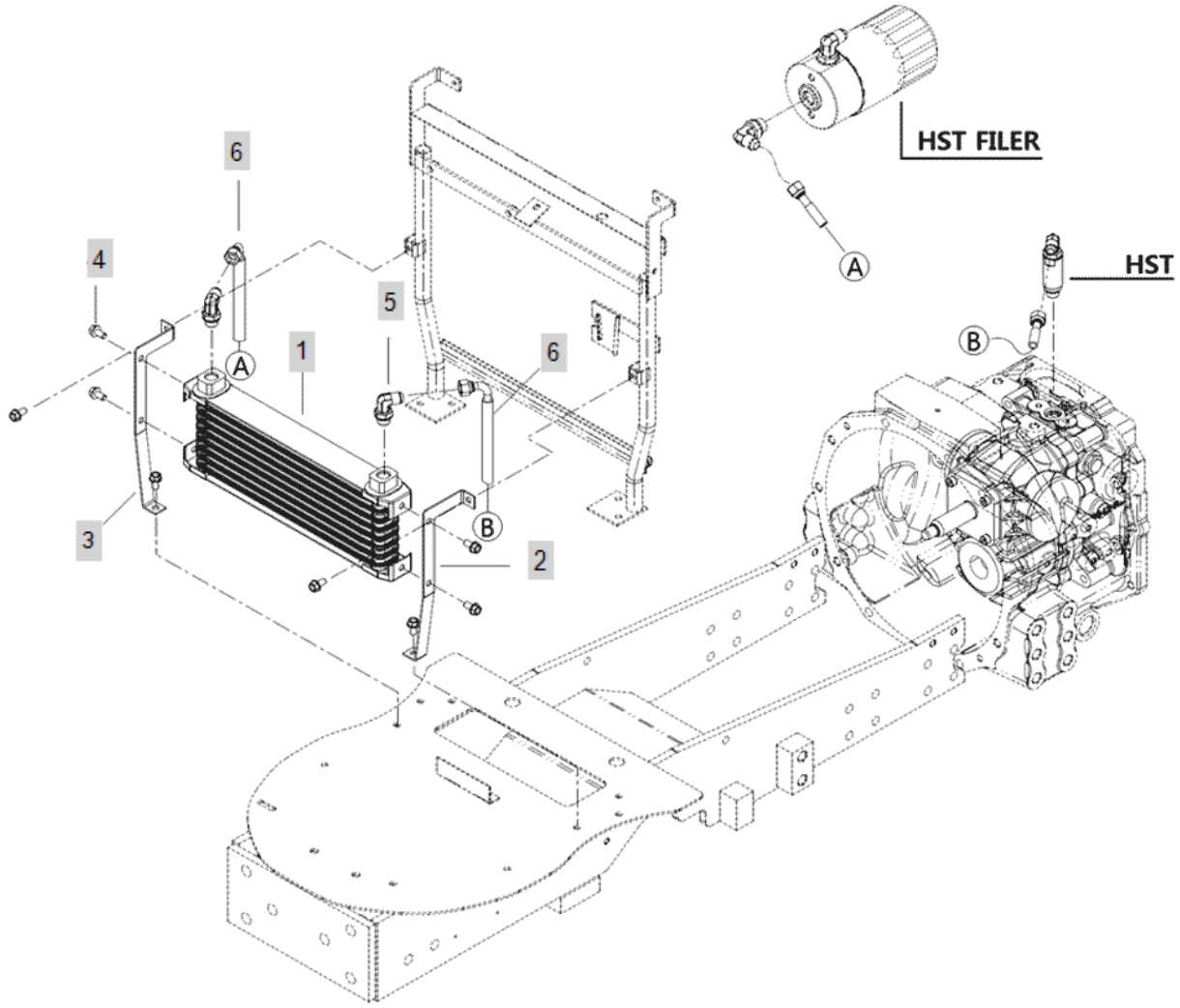

FIG C115 3015H	OIL COOLER	Year/Month 2020/01

KeyNo.	Part Number	Part Name	Quantity	Other
1	TA00039614A	OIL COOLER	1	
2	TA00042434A	BRACKET, OIL COOLER(L)	1	
3	TA00042435A	BRACKET, OIL COOLER(R)	1	
4	26106-080162	SCREW,HEXFLANGEHEADCAP	8	
5	CEE4050000A4	ELBOW (3/8)	2	
6	TA00043155A	HOSE B	2	

FIG C118 3015H	HYD FILTER	Year/Month 2020/01

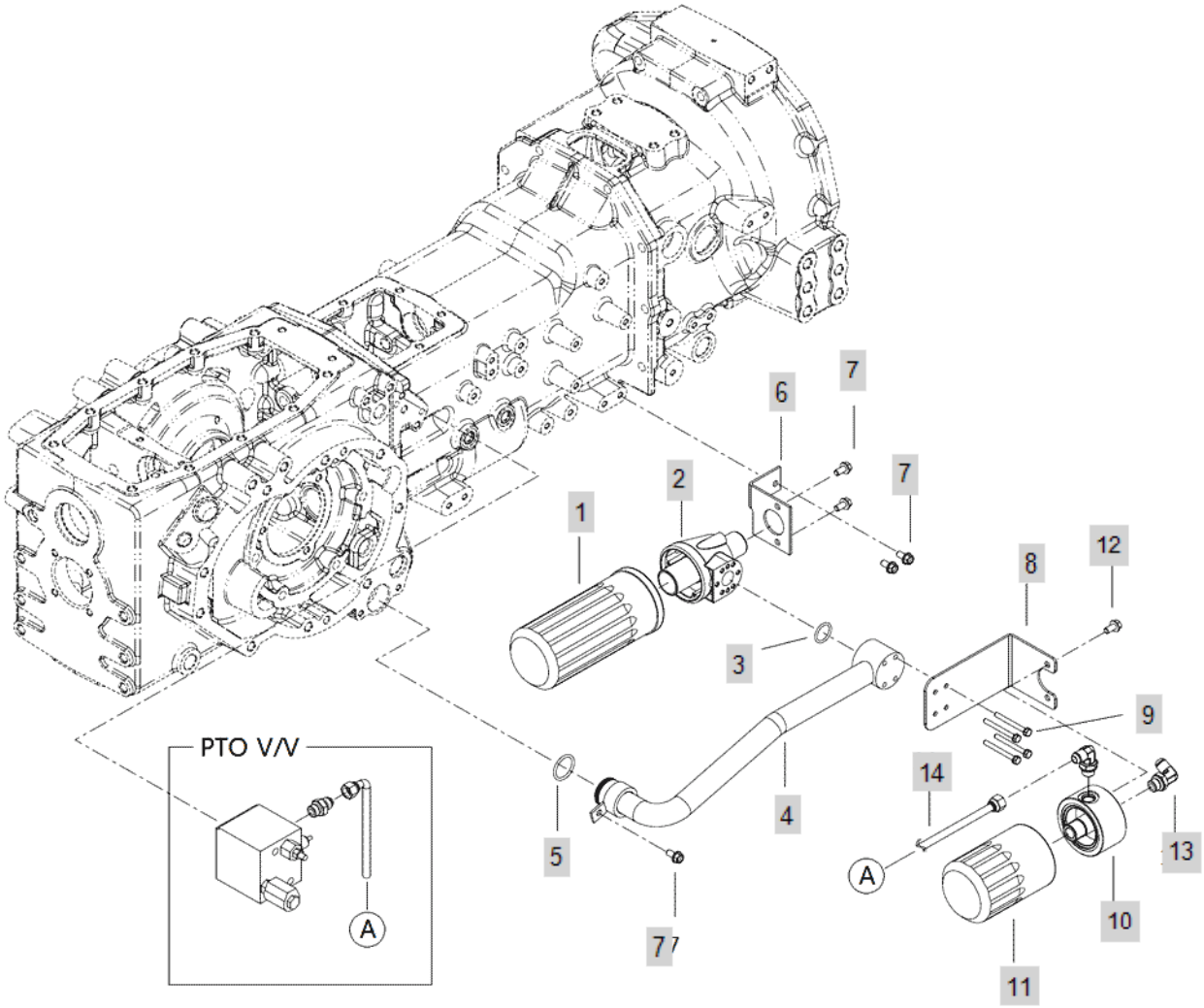

FIG C118 3015H	HYD FILTER	Year/Month 2020/01

KeyNo.	Part Number	Part Name	Quantity	Other
1	TA00025525A	FILTER, HYD OIL (20R/20C SERIES)	1	
2	TTB8020011A3	COVER: FILTER	1	
3	24321-000250	O-RING	1	
4	TA00039138A	PIPE	1	
5	24311-000320	O-RING, DYNAMIC (Φ32)	1	
6	TA00039142A	BRACKET	1	
7	26106-080162	SCREW,HEXFLANGEHEADCAP	5	
8	TA00043722A	BRACKET	1	
9	26013-060602	DRY BUSH	4	
10	TA00043718A	COVER, FILTER	1	
11	TA00043153A	FILTER, HST OIL (new)	1	
12	26106-080122	Bolt, Hexa (8-12)	2	
13	CEE4050000A4	ELBOW (3/8)	2	
14	TA00043154B	HOSE A	1	

FIG C119A-1 3015H	ELE'C WIRING(2015.06)	Year/Month 2020/01

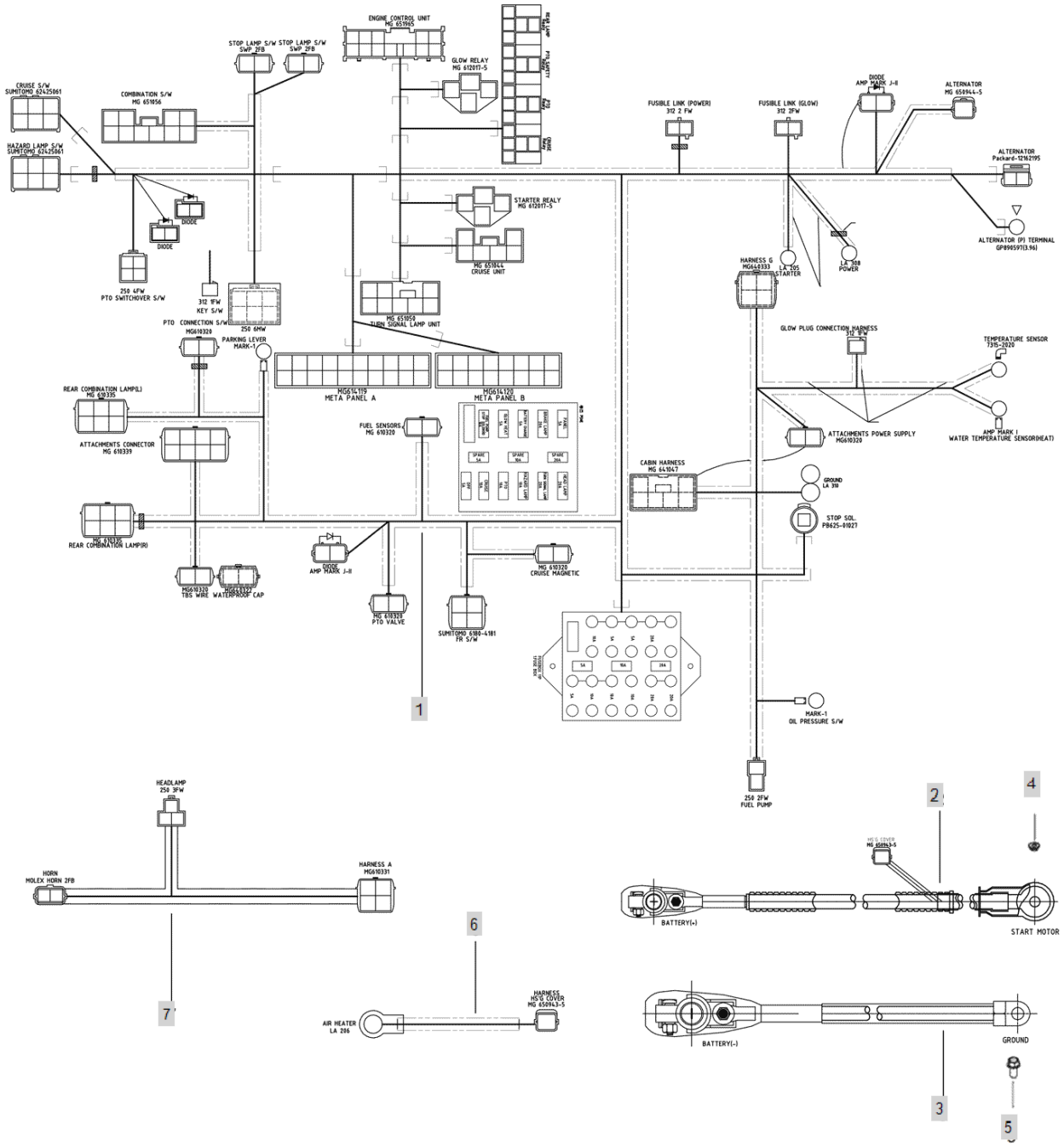

FIG C119A-1 3015H	ELE'C WIRING(2015.06)	Year/Month 2020/01

KeyNo.	Part Number	Part Name	Quantity	Other
1	HA00001119A	HARNESS	1	
2	TCD5270000C	BATTERY CABLE(+)	1	
3	HA00000415A	BATTERY CABLE (-)	1	
4	26367-080002	HEX FLANGE NUT (Φ8)	1	
5	26106-100142	Bolt, Hexa (10-14)	1	
6	CQH3120000A4	WIRE HARNESS H	1	
7	HA00001049A	HARNESS G	1	

FIG C119A-2 3015H	ELE'C WIRING	Year/Month 2020/01

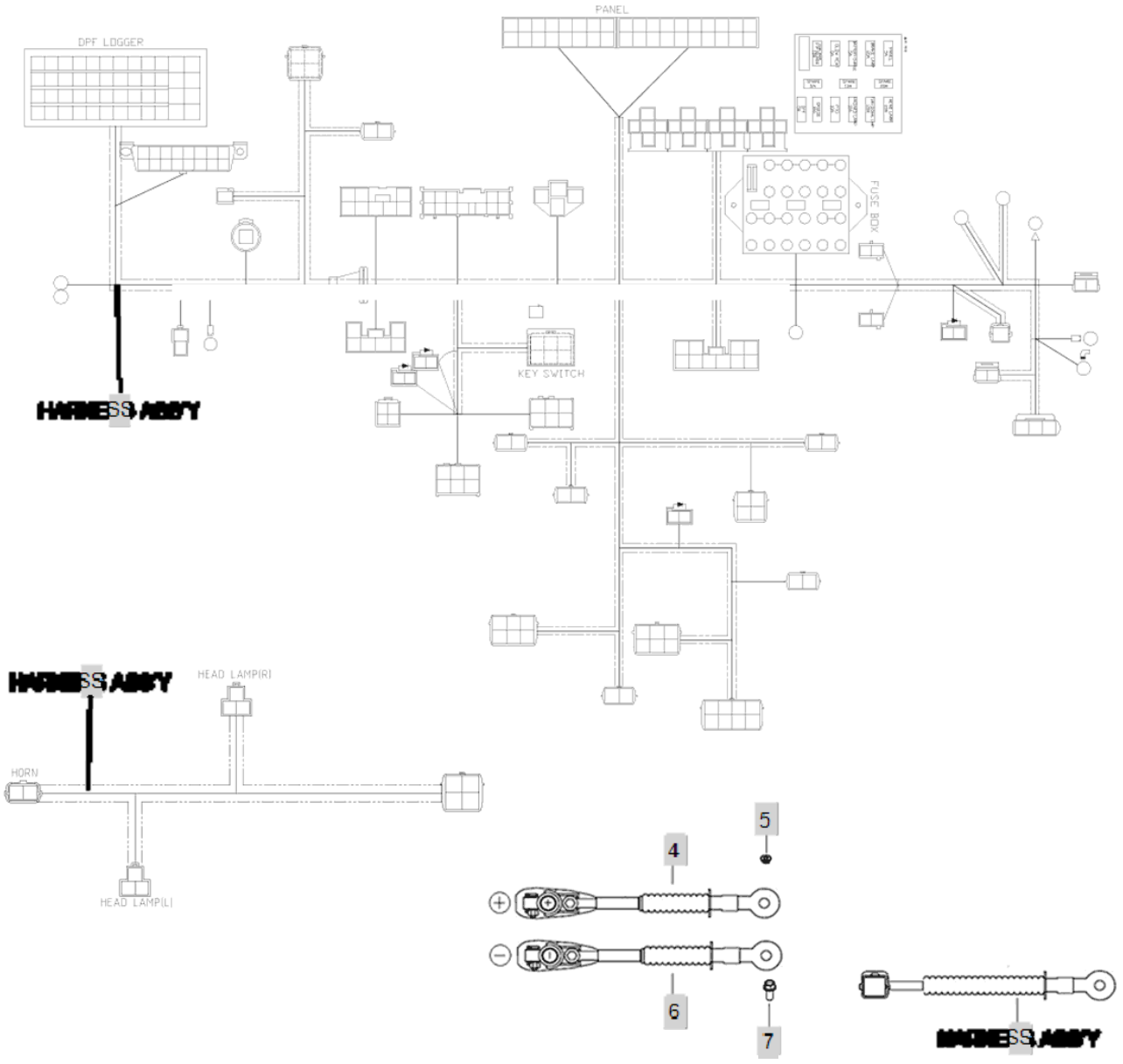

FIG C119A-2 3015H	ELE'C WIRING	Year/Month 2020/01

KeyNo.	Part Number	Part Name	Quantity	Other
HARNESS ASS'Y	HA00001119A	HARNESS	1	
HARNESS ASS'Y	HA00001055A	HARNESS G	1	
HARNESS ASS'Y	CQH3120000A	WIRE HARNESS H	1	
4	TCD5270000C	BATTERY CABLE(+)	1	
5	26367-080002	HEX FLANGE NUT (Φ8)	1	
6	HA00000982A	HEAD LAMP(R)	1	
7	26106-100142	Bolt, Hexa (10-14)	1	

FIG C119B-3 3015H	ELE'C WIRING	Year/Month 2020/01

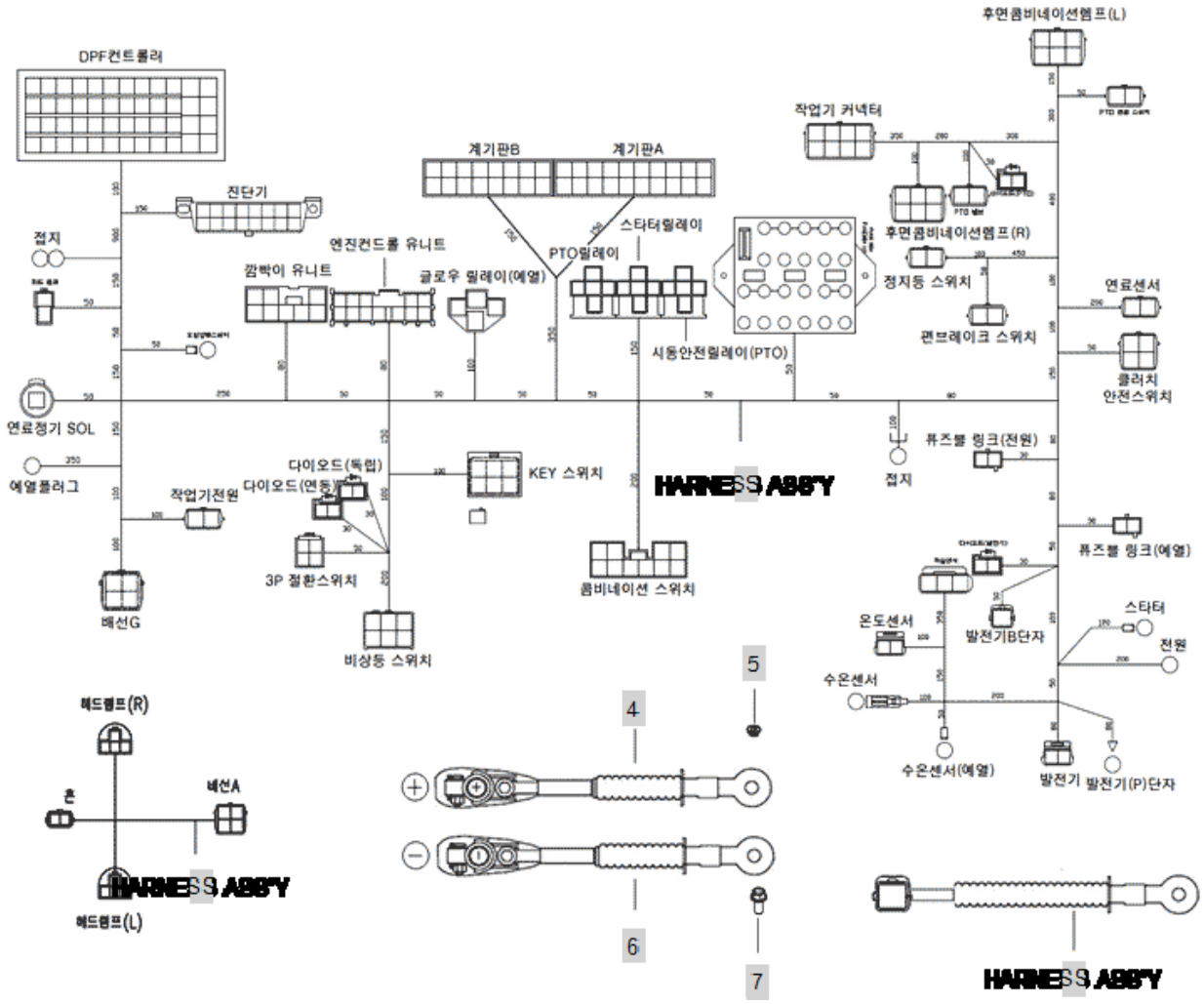

FIG C119B-3 3015H	ELE'C WIRING	Year/Month 2020/01

KeyNo.	Part Number	Part Name	Quantity	Other
HARNESS ASS'Y	HA00001533A	HARNESS	1	
HARNESS ASS'Y	HA00001477A	HARNESS G	1	
HARNESS ASS'Y	CQH3120000A	WIRE HARNESS H	1	
4	TCD5270000C	BATTERY CABLE(+)	1	
5	26367-080002	HEX FLANGE NUT (Φ8)	1	
6	HA00000982A	HEAD LAMP(R)	1	
7	26106-100142	Bolt, Hexa (10-14)	1	

FIG C124B 3015H	BATTERY	Year/Month 2020/01

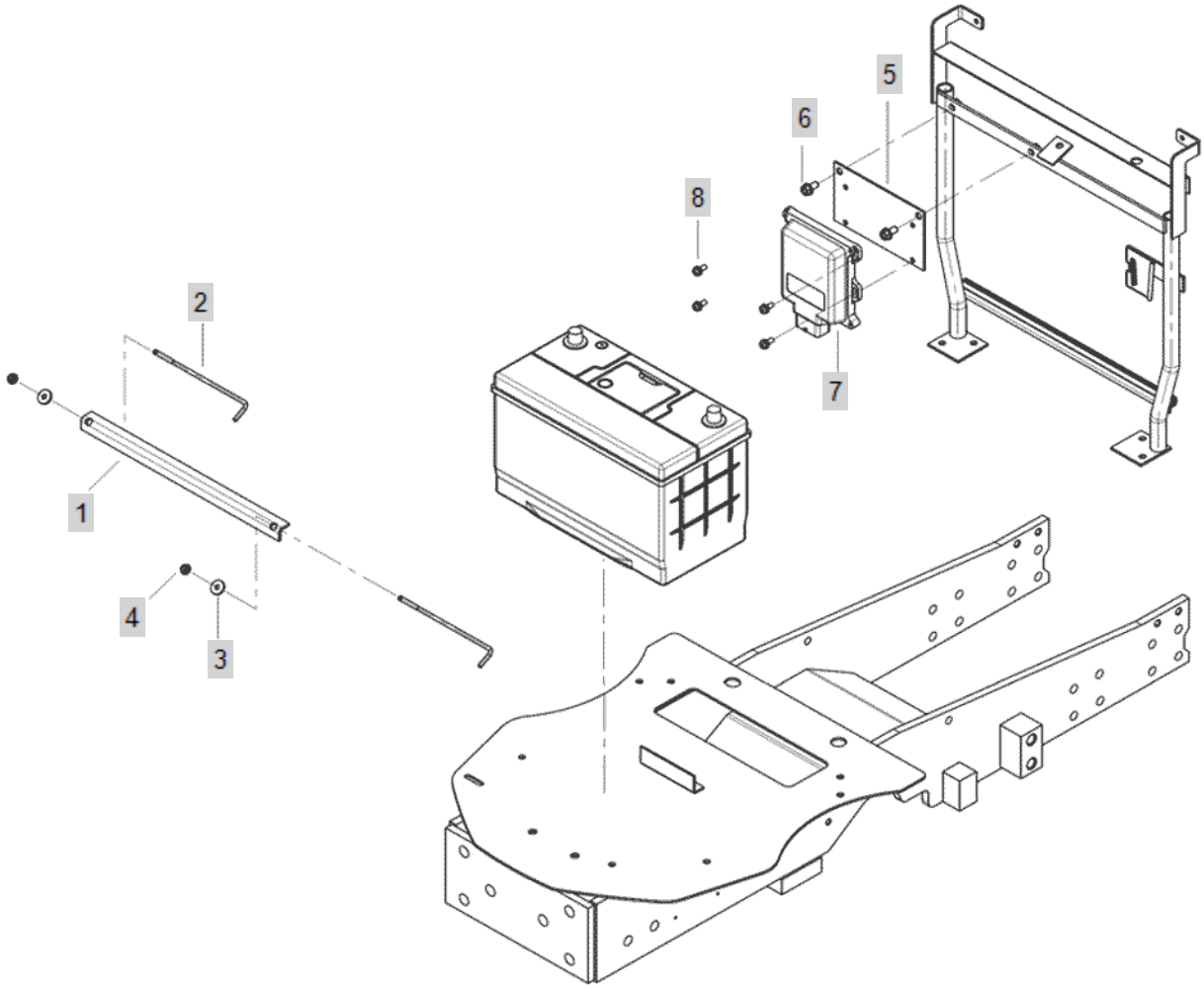

FIG C124B 3015H	BATTERY	Year/Month 2020/01

KeyNo.	Part Number	Part Name	Quantity	Other
1	TA00039672A	BRACKET	1	
2	TA00039673A	ROD	2	
3	22157-060000	WASHER, PLAIN (Φ 06)	2	
4	26367-060002	Nut, Hexa (Φ6)	2	
5	TA00040609B	BRACKET	1	
6	26106-080162	SCREW,HEXFLANGEHEADCAP	2	
7	EA00003292B	DPF LOGGER	1	
8	26023-060162	Screw, (6-16)	4	

FIG C125-1 3015H	SWITCH	Year/Month 2020/01

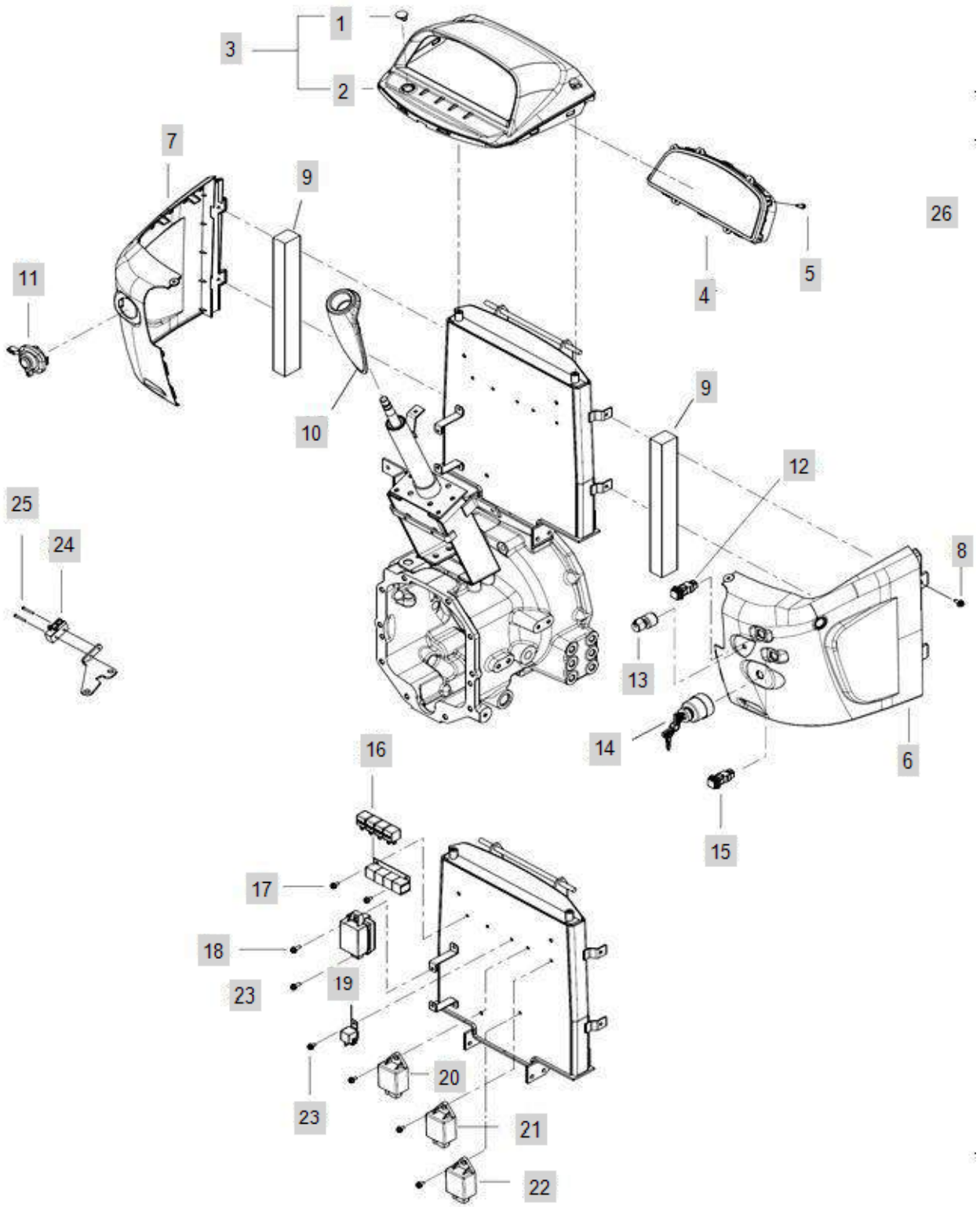

FIG C125-1 3015H	SWITCH	Year/Month 2020/01

KeyNo.	Part Number	Part Name	Quantity	Other
1	TA00042539A	CAP	1	
2	TA00041201A	COVER, METER	1	
3	TA00042932A	METER COVER	1	
4	HA00001412A	METER ASSY	1	
4-1	HA00000722B	METER ASSY	1	
5	22857-400120	BOLT	8	
6	TA00042933A	DASHBOARD L	1	
7	TA00041199A	DASHBOARD L	1	
8	TCE9010000A4	BOLT	9	
9	TA00040936C	URETHANE	2	
10	TA00041202A	COVER, COLUMN	1	
11	HA00000067A	COMBINATION SWITCH	1	
12	HA00001033A	CRUISE SWITCH	1	
13	HA00001350A	PTO SWITCH	1	
13-1	HA00000467A	4WD S/W(NF)	1	
14	TTC5030000B	START SWITCH ASS'Y	1	
15	FTC5340000A3	EMERGENCY LAMP SWITCH	1	
16	FTC5130000A3	RELAY(5P)	4	
17	26013-060169	BOLT(+SW)	2	
18	26106-060182	Bolt, Hexa (6-18)	2	
19	FTB9160000A	RELAY G4R	1	
20	HA00001111A	GLOW CONTROLLER	1	
21	HA00000821A	FLASHER RELAY	1	
22	HA00000174A	CRUISE CONTROL	1	
23	26106-060122	HEX BOLT (6-12)	4	
24	FTC5110000A3	SWITCH, PTO CONNECT	1	
25	26557-040302	+SCREW	2	
26	HA00001174A	METER UPPER COVER	1	

FIG C125-2 3015H	SWITCH	Year/Month 2020/01

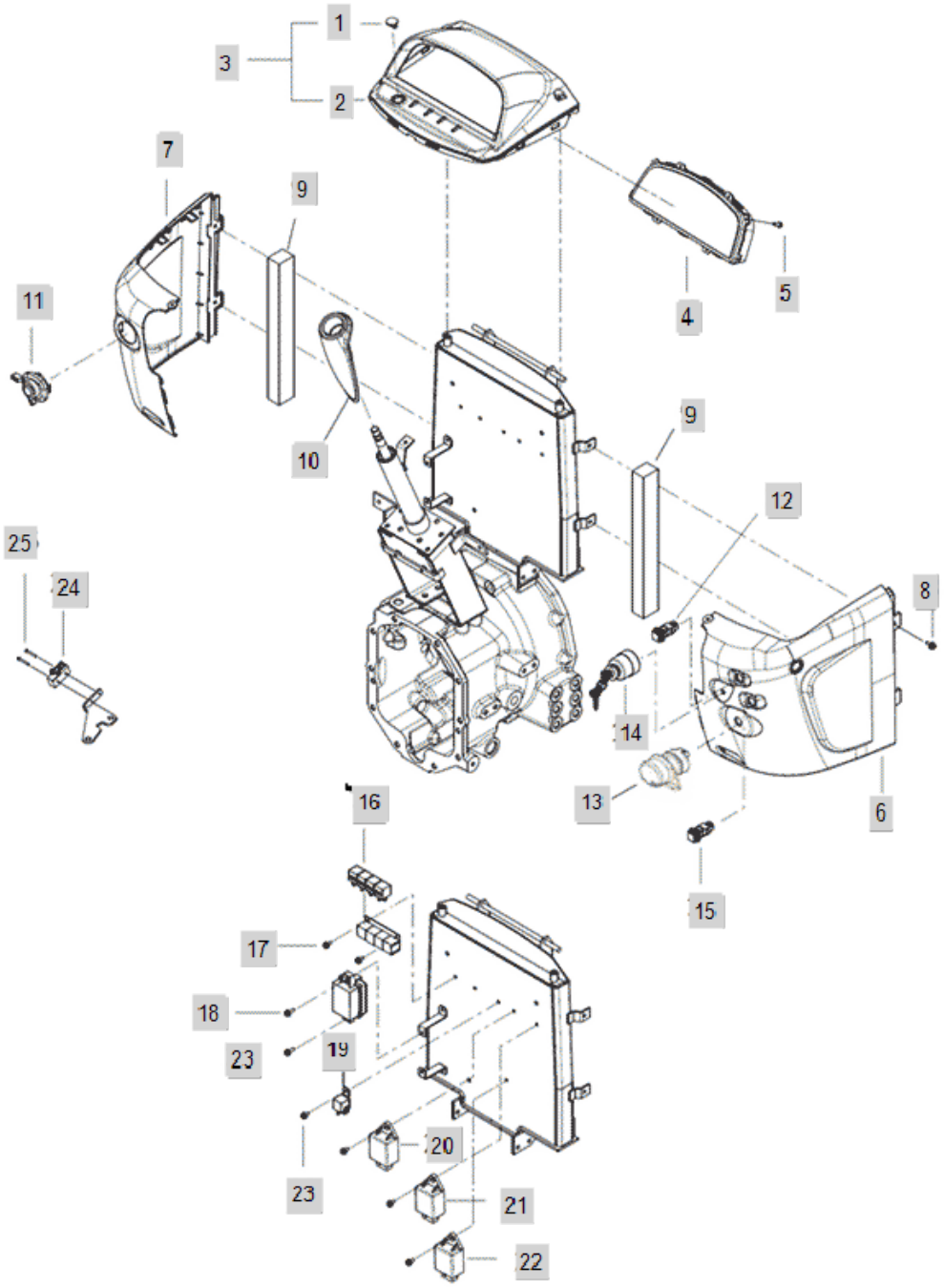

FIG C125-2 3015H	SWITCH	Year/Month 2020/01

KeyNo.	Part Number	Part Name	Quantity	Other
1	TA00042539A	CAP	1	
2	TA00041201A	COVER, METER	1	
3	TA00042932A	METER COVER	1	
4	HA00001412A	METER ASSY	1	
5	22857-400120	BOLT	8	
6	TA00042933A	DASHBOARD L	1	
7	TA00041199A	DASHBOARD L	1	
8	TCE9010000A4	BOLT	9	
9	TA00040936C	URETHANE	2	
10	TA00041202A	COVER, COLUMN	1	
11	HA00000067A	COMBINATION SWITCH	1	
12	TA00047320A	CAP, SWITCH	1	
13	HA00001350A	PTO SWITCH	1	
14	TTC5030000B	START SWITCH ASS'Y	1	
15	FTC5340000A3	EMERGENCY LAMP SWITCH	1	
16	FTC5130000A3	RELAY(5P)	4	
17	26013-060169	BOLT(+SW)	2	
18	26106-060182	Bolt, Hexa (6-18)	2	
19	FTB9160000A	RELAY G4R	1	
20	HA00001349A	CONTROL UNIT	1	
21	HA00001595A	FLASHER RELAY	1	
22	HA00000174A	CRUISE CONTROL	1	
23	26106-060122	HEX BOLT (6-12)	4	
24	FTC5110000A3	SWITCH, PTO CONNECT	1	
25	26557-040302	+SCREW	2	

FIG C135.1-1 3015H	BONNET	Year/Month 2020/01

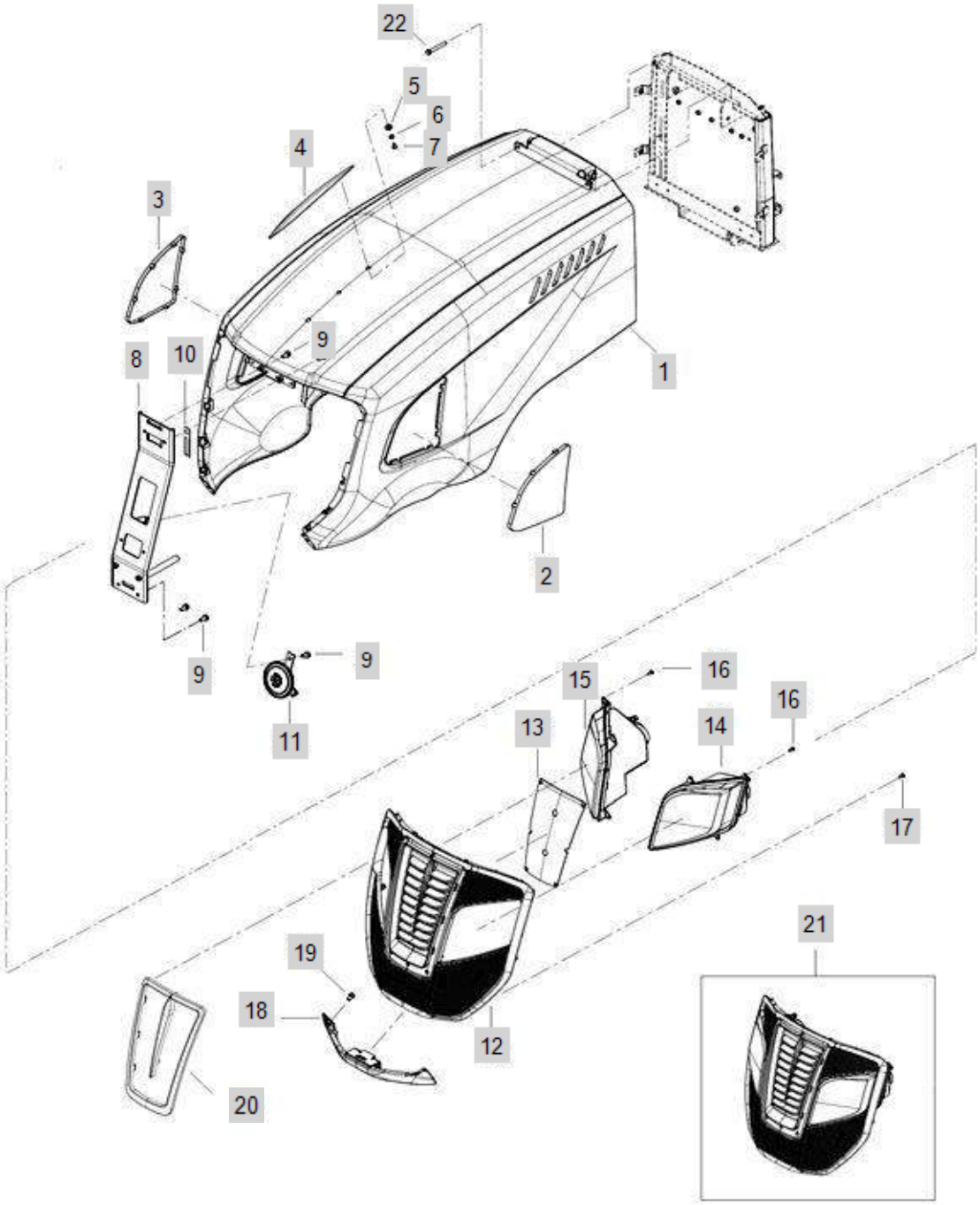

FIG C135.1-1 3015H	BONNET	Year/Month 2020/01

KeyNo.	Part Number	Part Name	Quantity	Other
1	TA00041144C	FRAME,BONNET	1	
2	TA00041142A	MESH_L	1	
3	TA00041143A	MESH_R	1	
4	TA00041210A	MARK, CENTER	1	
5	VD06370000B	SUB TO ->VD06370000B4 YIELDING RUBBER	3	
6	22157-060000	WASHER, PLAIN (Φ 06)	3	
7	22587-480126	TAPPING SCREW	3	
8	TA00041187C	SUPPORT ASSY, FRONT	1	
9	26106-080162	SCREW,HEXFLANGEHEADCAP	5	
10	TT80180000A4	Clamp, B	2	
11	HA00000929A	HORN	1	
12	TA00041607A	FRONT MASK ASSY	1	
13	TA00041581A	FRONT MASK PLATE	1	
14	TA00041596A	HEADLAMP(LH)	1	
15	TA00041597A	HEADLAMP(RH)	1	
16	22587-480206	TAPPING SCREW	2	
17	22587-480126	TAPPING SCREW	27	
18	TA00041166A	LOWER, BONNET	1	
19	26367-080002	HEX FLANGE NUT (Φ8)	2	
20	TA00042801A	DECO,FRONT MASK	1	
21	TA00041608A	FRONT MASK ASSY	1	
22	26117-080409	BOLT	2	

FIG C135.1-2 3015H	BONNET(2018.08~)	Year/Month 2020/01

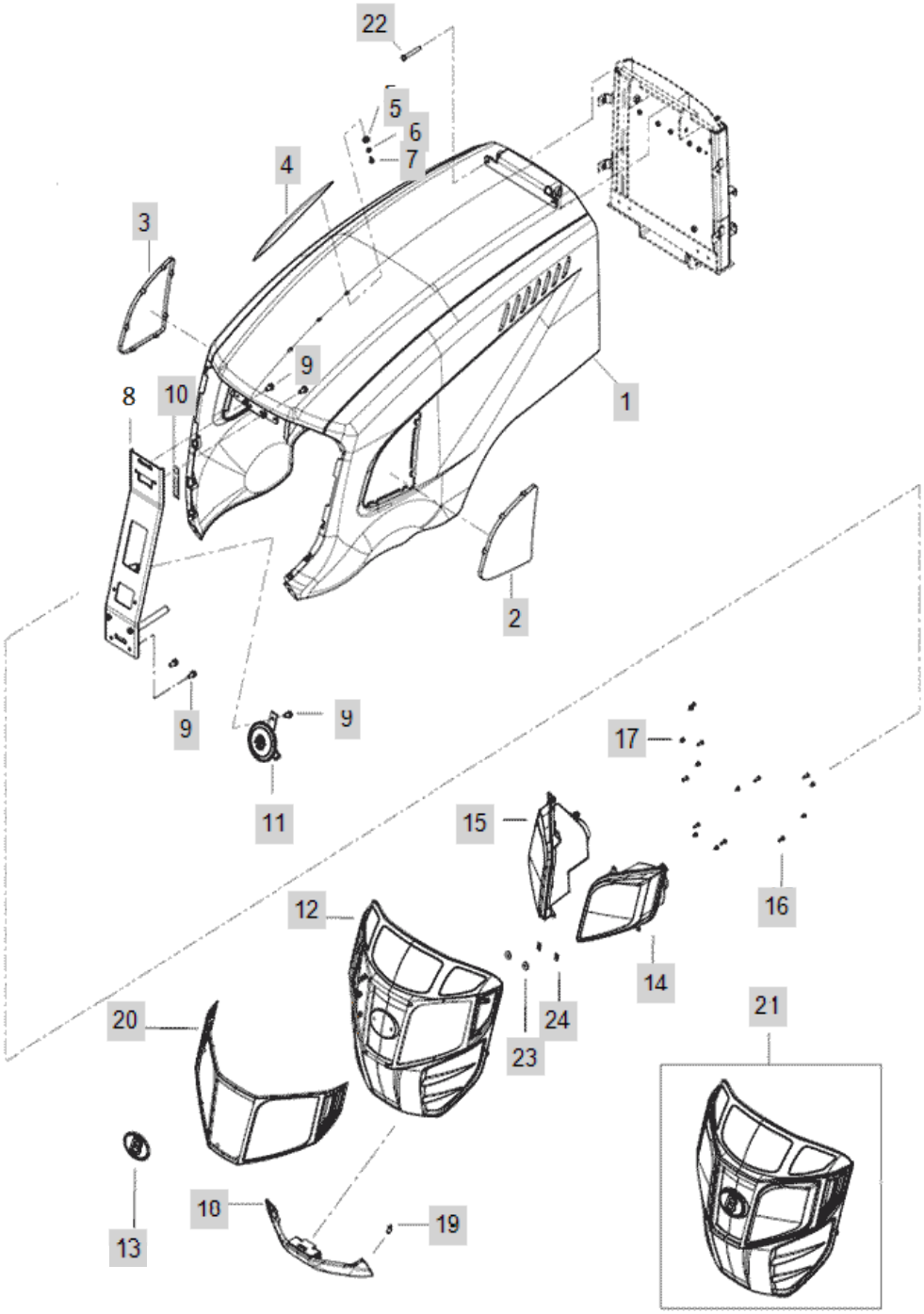

FIG C135.1-2 3015H	BONNET(2018.08~)	Year/Month 2020/01

KeyNo.	Part Number	Part Name	Quantity	Other
1	TA00041144C	FRAME,BONNET	1	
2	TA00041142A	MESH_L	1	
3	TA00041143A	MESH_R	1	
4	TA00041210A	MARK, CENTER	1	
5	VD06370000B	SUB TO ->VD06370000B4 YIELDING RUBBER	3	
6	22157-060000	WASHER, PLAIN (Φ 06)	3	
7	22587-480126	TAPPING SCREW	3	
8	TA00041187C	SUPPORT ASSY, FRONT	1	
9	26106-080162	SCREW,HEXFLANGEHEADCAP	5	
10	TT80180000A4	Clamp, B	2	
11	HA00000929A	HORN	1	
12	TA00055334A	FRONT MASK	1	
13	TA00052253A	EMBLEM	1	
14	HA00001483A	HEAD LAMP L	1	
15	HA00001484A	HEAD LAMP R	1	
16	22587-480206	TAPPING SCREW	8	
17	22587-480126	TAPPING SCREW	8	
18	TA00041166A	LOWER, BONNET	1	
19	26367-080002	HEX FLANGE NUT (Φ8)	2	
20	TA00055335A	FRONT GRILL	1	
21	TA00056767A	FRONT MASK ASSY	1	
22	26117-080409	BOLT	2	
23	TTD6440000A4	CUSHION, RUBBER	2	
24	TB41290000A4	NUT	2	

FIG C135.1-3 3015H	BONNET(2019.04~)	Year/Month 2020/01

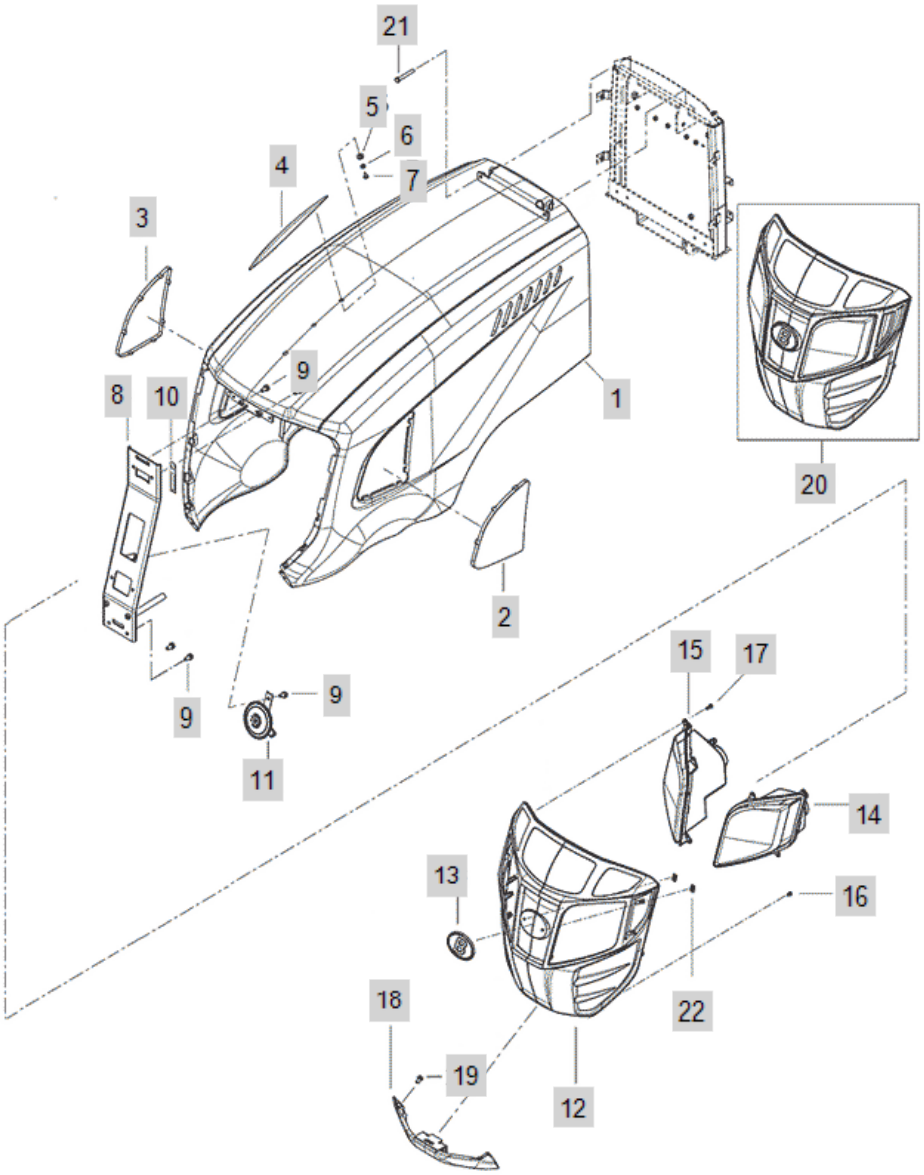

FIG C135.1-3 3015H	BONNET(2019.04~)	Year/Month 2020/01

KeyNo.	Part Number	Part Name	Quantity	Other
1	TA00041144C	FRAME,BONNET	1	
2	TA00041142A	MESH_L	1	
3	TA00041143A	MESH_R	1	
4	TA00041210A	MARK, CENTER	1	
5	VD06370000B	SUB TO ->VD06370000B4 YIELDING RUBBER	3	
6	22157-060000	WASHER, PLAIN (Φ 06)	3	
7	22587-480126	TAPPING SCREW	3	
8	TA00053545A	SUPPORT ASSY	1	
9	26106-080162	SCREW,HEXFLANGEHEADCAP	5	
10	TT80180000A4	Clamp, B	2	
11	HA00000929A	HORN	1	
12	TA00055334A	FRONT MASK	1	
13	TA00052253A	EMBLEM	1	
14	HA00001609A	HEAD LAMP L	1	
15	HA00001610A	HEAD LAMP R	1	
16	22587-480126	TAPPING SCREW	13	
17	22587-480206	TAPPING SCREW	10	
18	TA00041166A	LOWER, BONNET	1	
19	26367-080002	HEX FLANGE NUT (Φ8)	2	
20	TA00056767A	FRONT MASK ASSY	1	
21	26117-080409	BOLT	2	
22	TB41290000A4	NUT	2	

FIG C135.1-4 3015H	BONNET(2019.12~)	Year/Month 2020/01

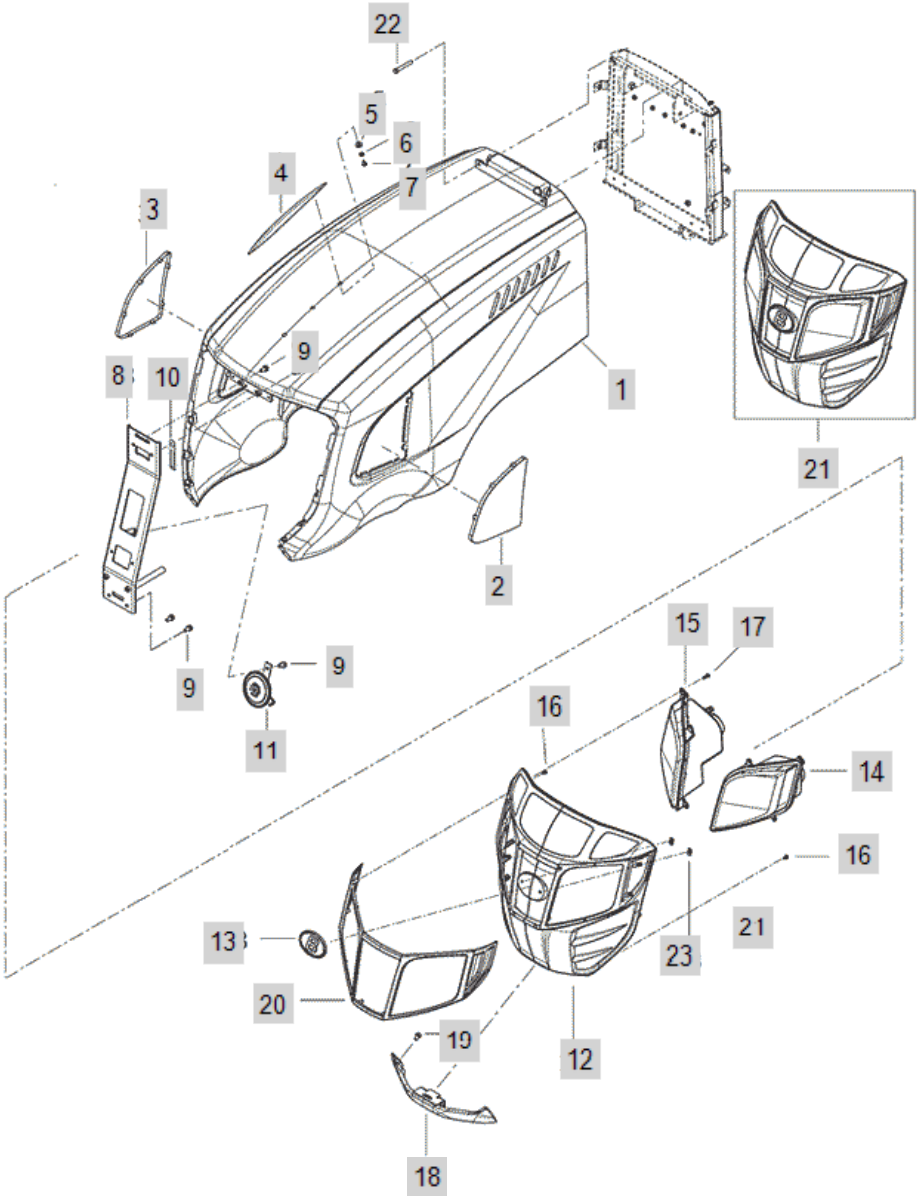

FIG C135.1-4 3015H	BONNET(2019.12~)	Year/Month 2020/01

KeyNo.	Part Number	Part Name	Quantity	Other
1	TA00041144C	FRAME,BONNET	1	
2	TA00041142A	MESH_L	1	
3	TA00041143A	MESH_R	1	
4	TA00041210A	MARK, CENTER	1	
5	VD06370000B	SUB TO ->VD06370000B4 YIELDING RUBBER	3	
6	22157-060000	WASHER, PLAIN (Φ 06)	3	
7	22587-480126	TAPPING SCREW	3	
8	TA00053545A	SUPPORT ASSY	1	
9	26106-080162	SCREW,HEXFLANGEHEADCAP	5	
10	TT80180000A4	Clamp, B	2	
11	HA00000929A	HORN	1	
12	TA00055334A	FRONT MASK	1	
13	TA00052253A	EMBLEM	1	
14	HA00001609A	HEAD LAMP L	1	
15	HA00001610A	HEAD LAMP R	1	
16	22587-480126	TAPPING SCREW	30	
17	22587-480206	TAPPING SCREW	2	
18	TA00041166A	LOWER, BONNET	1	
19	26367-080002	HEX FLANGE NUT (Φ8)	2	
20	TA00055335A	FRONT GRILL	1	
21	TA00056767A	FRONT MASK ASSY	1	
22	26117-080409	BOLT	2	
23	TB41290000A4	NUT	2	

FIG C135.2 3015H	BONNET	Year/Month 2020/01

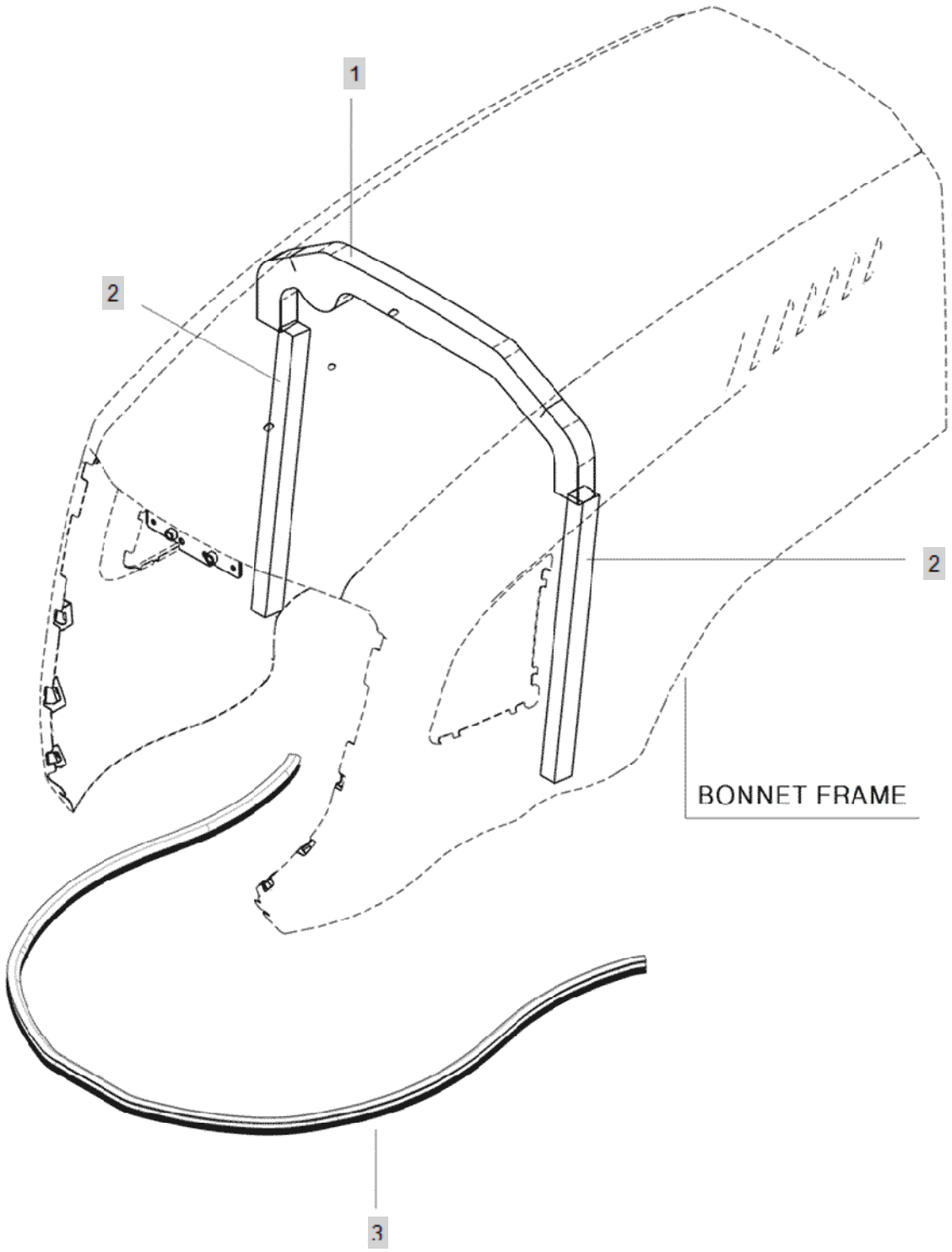

FIG C135.2 3015H	BONNET	Year/Month 2020/01

KeyNo.	Part Number	Part Name	Quantity	Other
1	TA00041593A	UPPER BONNET URETHANE	1	
2	TA00041594A	LEFT BONNET URETHANE	2	
3	TA00041790A	STRIP, BONNET	1	

FIG C136-1 3015H	LOCKING ASS'Y, BONNET	Year/Month 2020/01

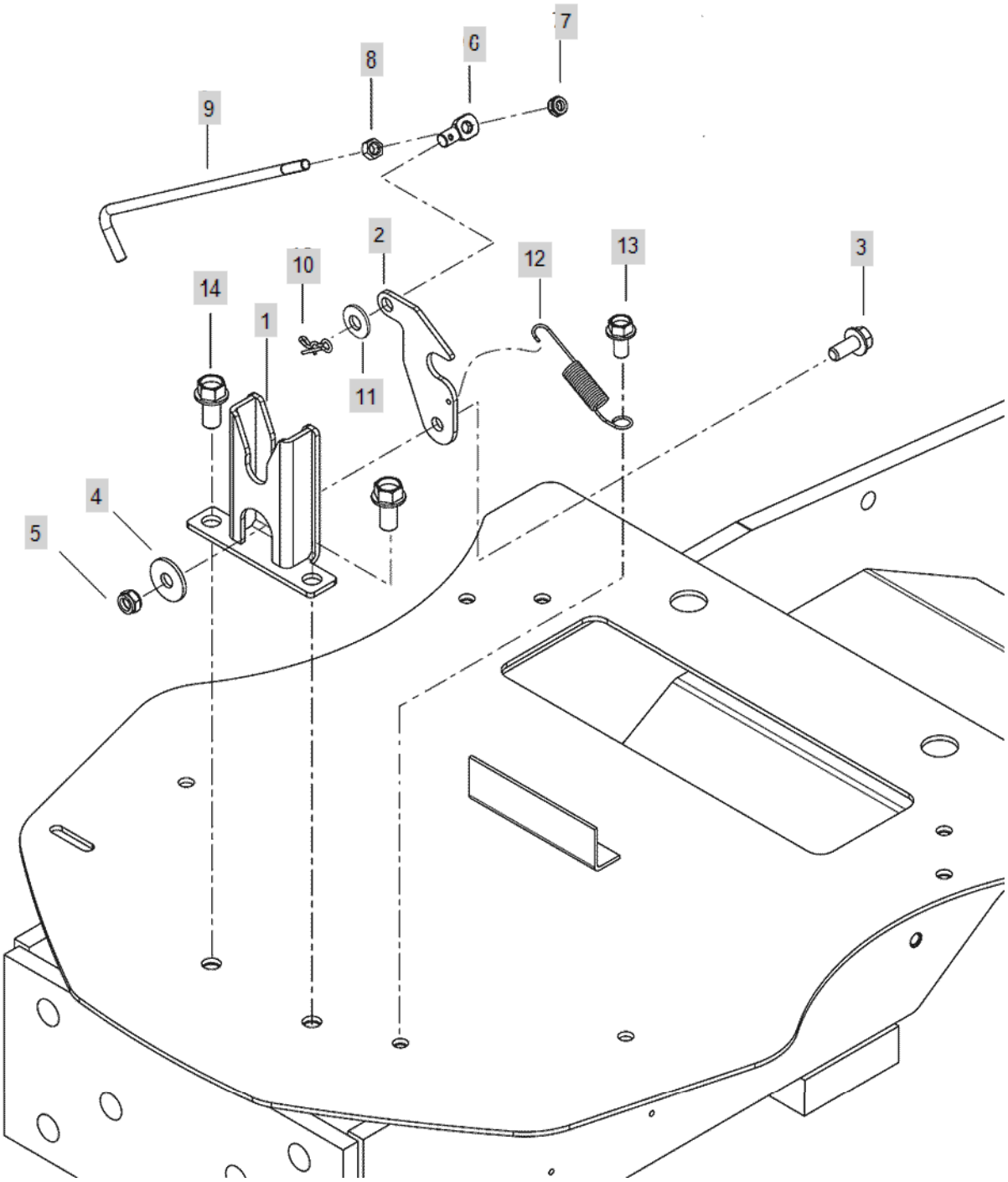

FIG C136-1 3015H	LOCKING ASS'Y, BONNET	Year/Month 2020/01

KeyNo.	Part Number	Part Name	Quantity	Other
1	TA00029712B	BODY	1	
2	TA00029717A	LOCK	1	
3	26106-080182	SCREW,HEXFLANGEHEADCAP	1	
4	22151-080000	WASHER, PLAIN (Φ 08)	1	
5	26347-080002	Unut	1	
6	FE04180000A	CONNECTOR	1	
7	26347-060002	NUT6	1	
8	26716-060002	HEX NUT (Φ6)	1	
9	TA00040648A	ROAD	1	
10	RR64050000B	SNAP PIN 8	1	
11	22117-080000	WASHER, PLAIN (Φ 08)	1	
12	TA00032837B	SPRING	1	
13	26106-080162	SCREW,HEXFLANGEHEADCAP	1	
14	26106-100202	HEX BOLT, (10-20)	2	

FIG C136-2 3015H	LOCKING ASS'Y, BONNET(2019.04~)	Year/Month 2020/01

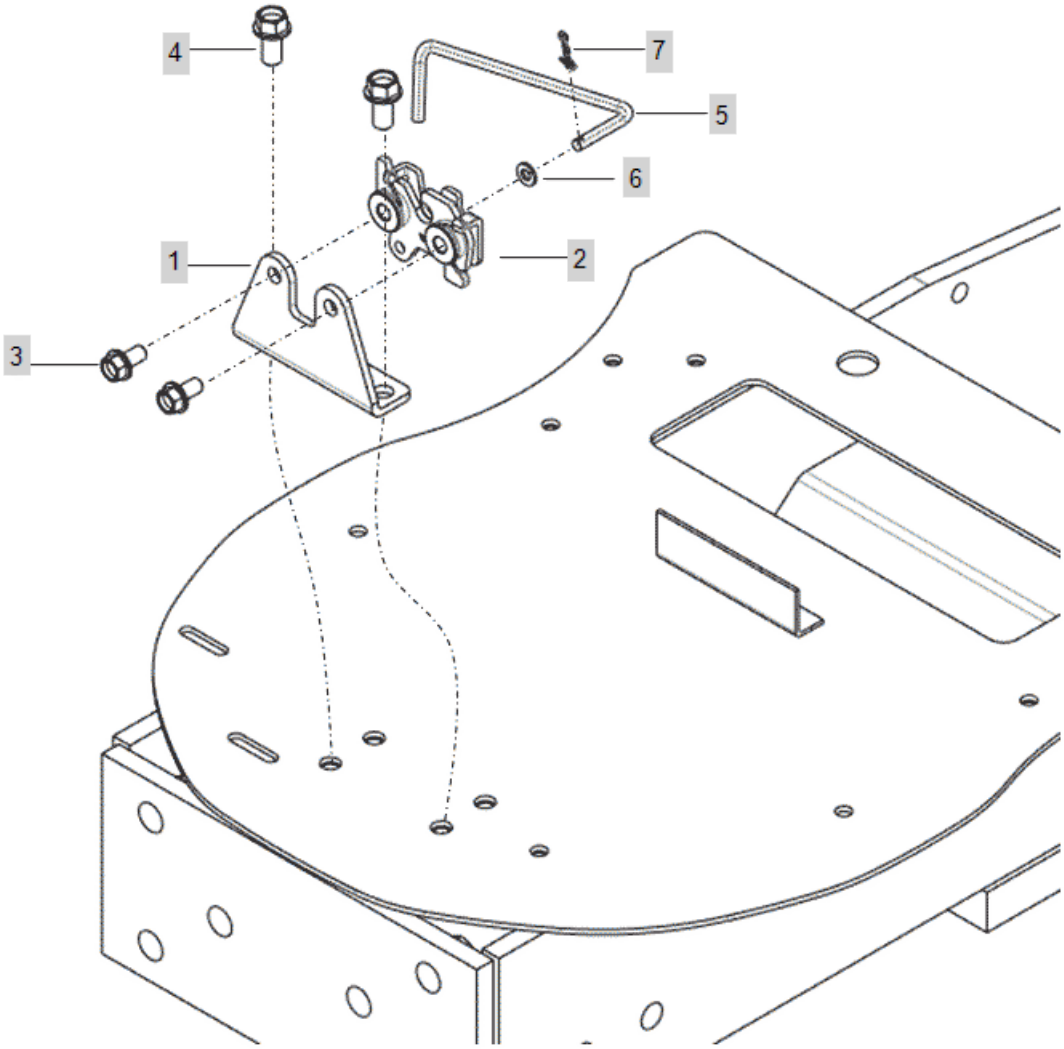

FIG C136-2 3015H	LOCKING ASS'Y, BONNET(2019.04~)	Year/Month 2020/01

KeyNo.	Part Number	Part Name	Quantity	Other
1	TA00053544A	LATCH BRACKET	1	
2	TA00053140A	LATCH ASSY	1	
3	26106-080162	SCREW,HEXFLANGEHEADCAP	2	
4	26106-100202	HEX BOLT, (10-20)	2	
5	TA00059551A	ROAD	1	
6	22137-060000	WASHER , PLAIN	1	
7	RR47070000A	PIN 6, COME-OFF SNAP	1	

FIG C136-3 3015H	LOCKING ASS'Y, BONNET(2019.12~)	Year/Month 2020/01

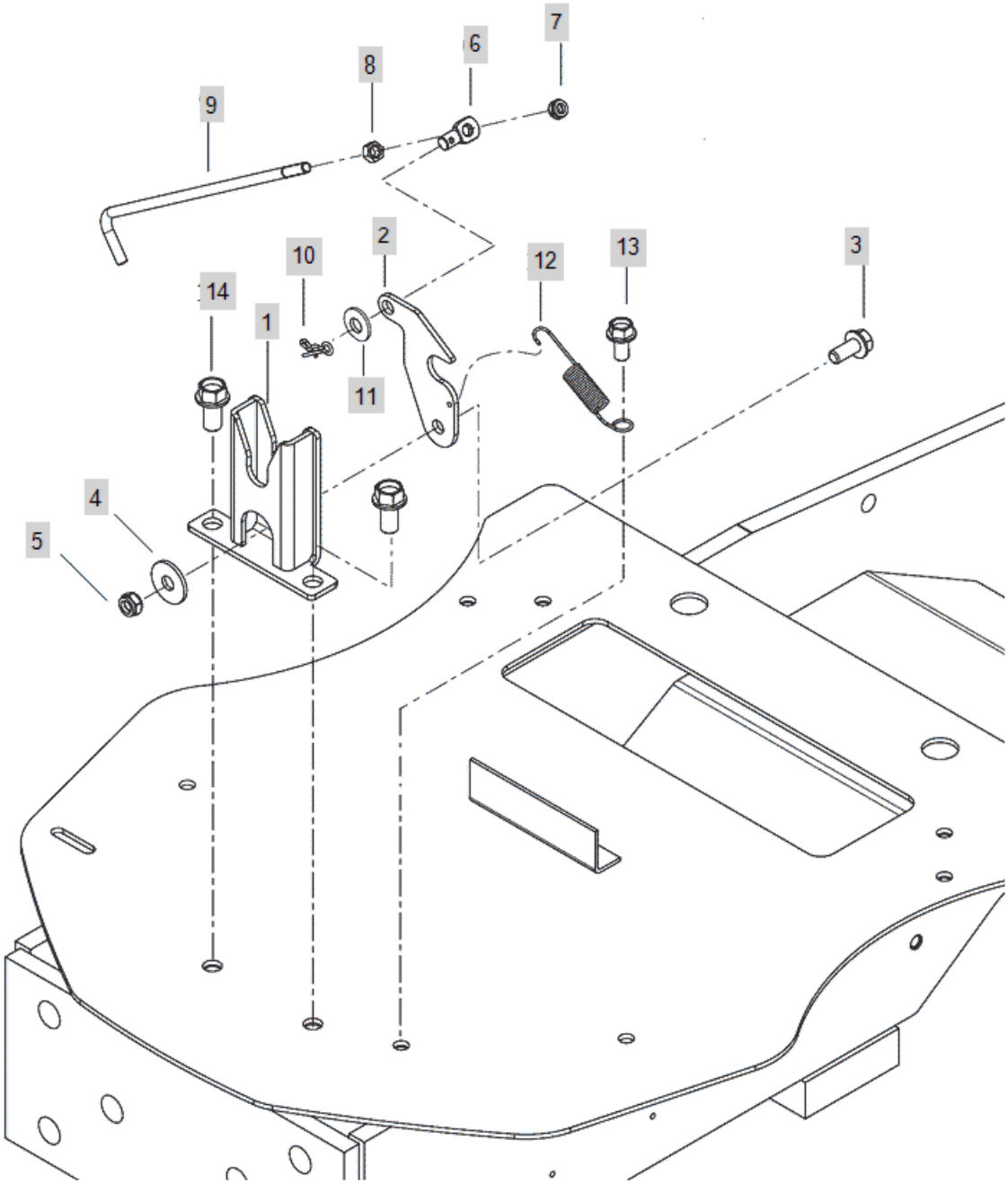

FIG C136-3 3015H	LOCKING ASS'Y, BONNET(2019.12~)	Year/Month 2020/01

KeyNo.	Part Number	Part Name	Quantity	Other
1	TA00029712B	BODY	1	
2	TA00029717A	LOCK	1	
3	26106-080182	SCREW,HEXFLANGEHEADCAP	1	
4	22151-080000	WASHER, PLAIN (Φ 08)	1	
5	26347-080002	Unut	1	
6	FE04180000A	CONNECTOR	1	
7	26347-060002	NUT6	1	
8	26716-060002	HEX NUT (Φ6)	1	
9	TA00040648A	ROAD	1	
10	RR64050000B	SNAP PIN 8	1	
11	22117-080000	WASHER, PLAIN (Φ 08)	1	
12	TA00032837B	SPRING	1	
13	26106-080162	SCREW,HEXFLANGEHEADCAP	1	
14	26106-100202	HEX BOLT, (10-20)	2	

FIG C137A-1 3015H	BONNET SUPPORT	Year/Month 2020/01

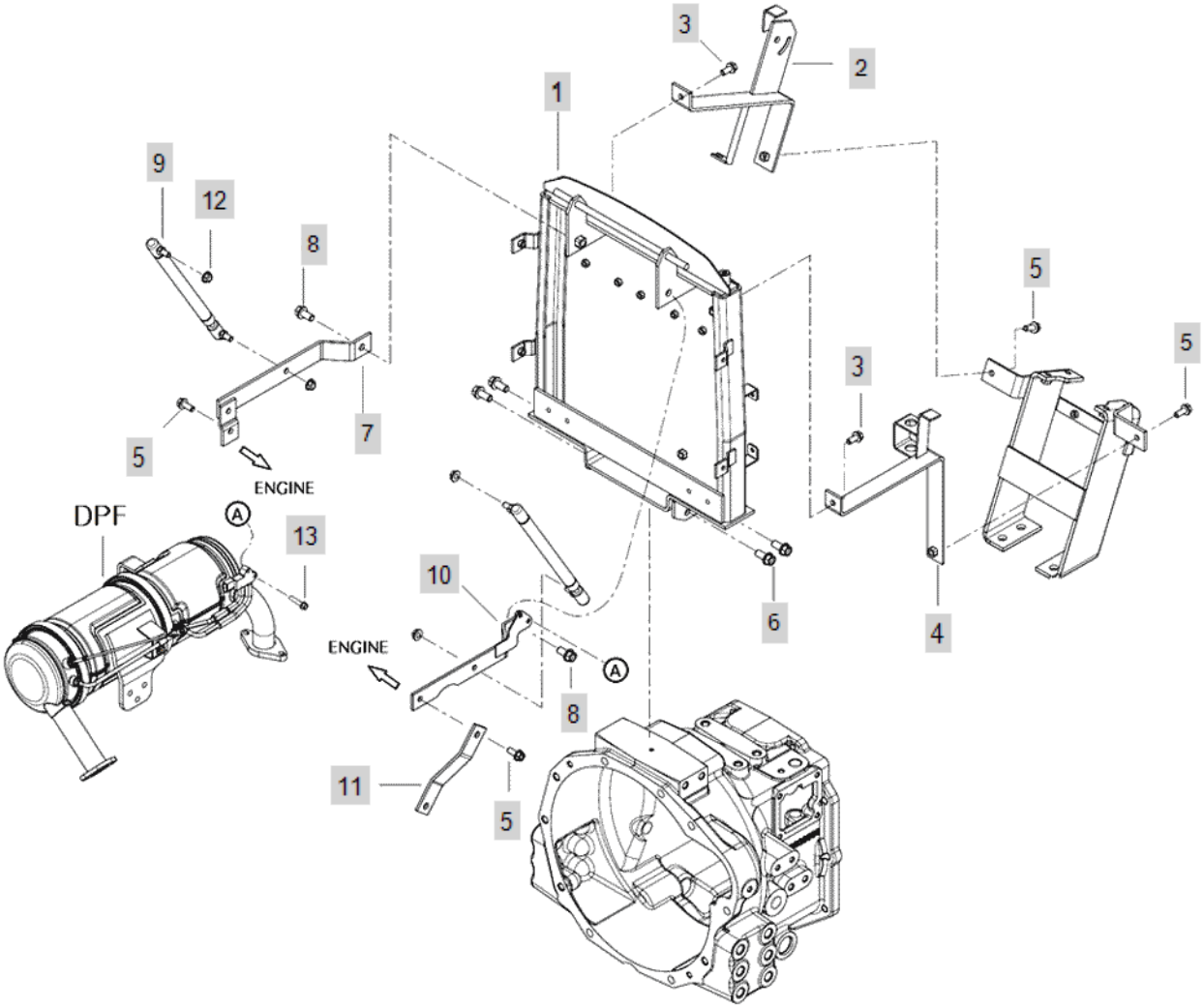

FIG C137A-1 3015H	BONNET SUPPORT	Year/Month 2020/01

KeyNo.	Part Number	Part Name	Quantity	Other
1	TA00040882F	HINGE SUPPORT, BONNET	1	
2	TA00040876C	BRACKET R, SUPPORT	1	
3	26106-080182	SCREW,HEXFLANGEHEADCAP	2	
4	TA00040868D	BRACKET L, SUPPORT	1	
5	26106-080202	SQR FLANGE BOLT	3	
6	26106-100222	BOLT	4	
7	TA00040848A	BRACKET L	1	
8	26106-100202	HEX BOLT, (10-20)	2	
9	TA00041773A	GAS SPRING	2	
10	TA00040849B	BRACKET L	1	
11	TA00040850A	BRACKET	1	
12	26367-080002	HEX FLANGE NUT (Φ8)	4	
13	26106-060252	Screw, (6-25)	2	

FIG C137A-2 3015H	BONNET SUPPORT (2018.02)	Year/Month 2020/01

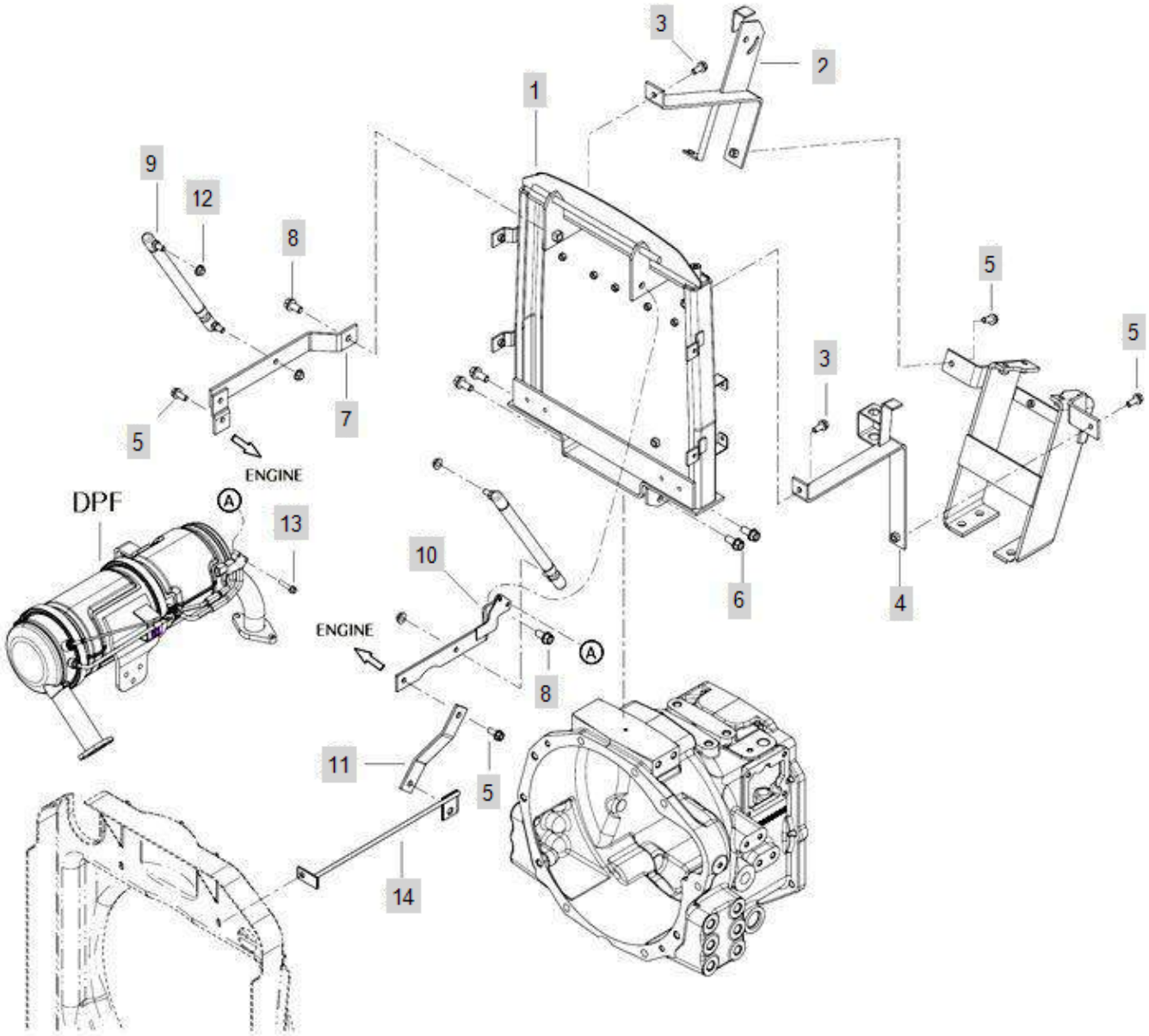

FIG C137A-2 3015H	BONNET SUPPORT (2018.02)	Year/Month 2020/01

KeyNo.	Part Number	Part Name	Quantity	Other
1	TA00040882F	HINGE SUPPORT, BONNET	1	
2	TA00040876C	BRACKET R, SUPPORT	1	
3	26106-080182	SCREW,HEXFLANGEHEADCAP	2	
4	TA00040868D	BRACKET L, SUPPORT	1	
5	26106-080202	SQR FLANGE BOLT	3	
6	26106-100222	BOLT	4	
7	TA00040848A	BRACKET L	1	
8	26106-100202	HEX BOLT, (10-20)	2	
9	TA00041773A	GAS SPRING	2	
10	TA00040849B	BRACKET L	1	
11	TA00040850A	BRACKET	1	
12	26367-080002	HEX FLANGE NUT (Φ8)	4	
13	26106-060252	Screw, (6-25)	2	
14	TA00041934B	SUPPORT ASSY(T4)	1	

FIG C137B-3 3015H	BONNET SUPPORT (2018.02)	Year/Month 2020/01

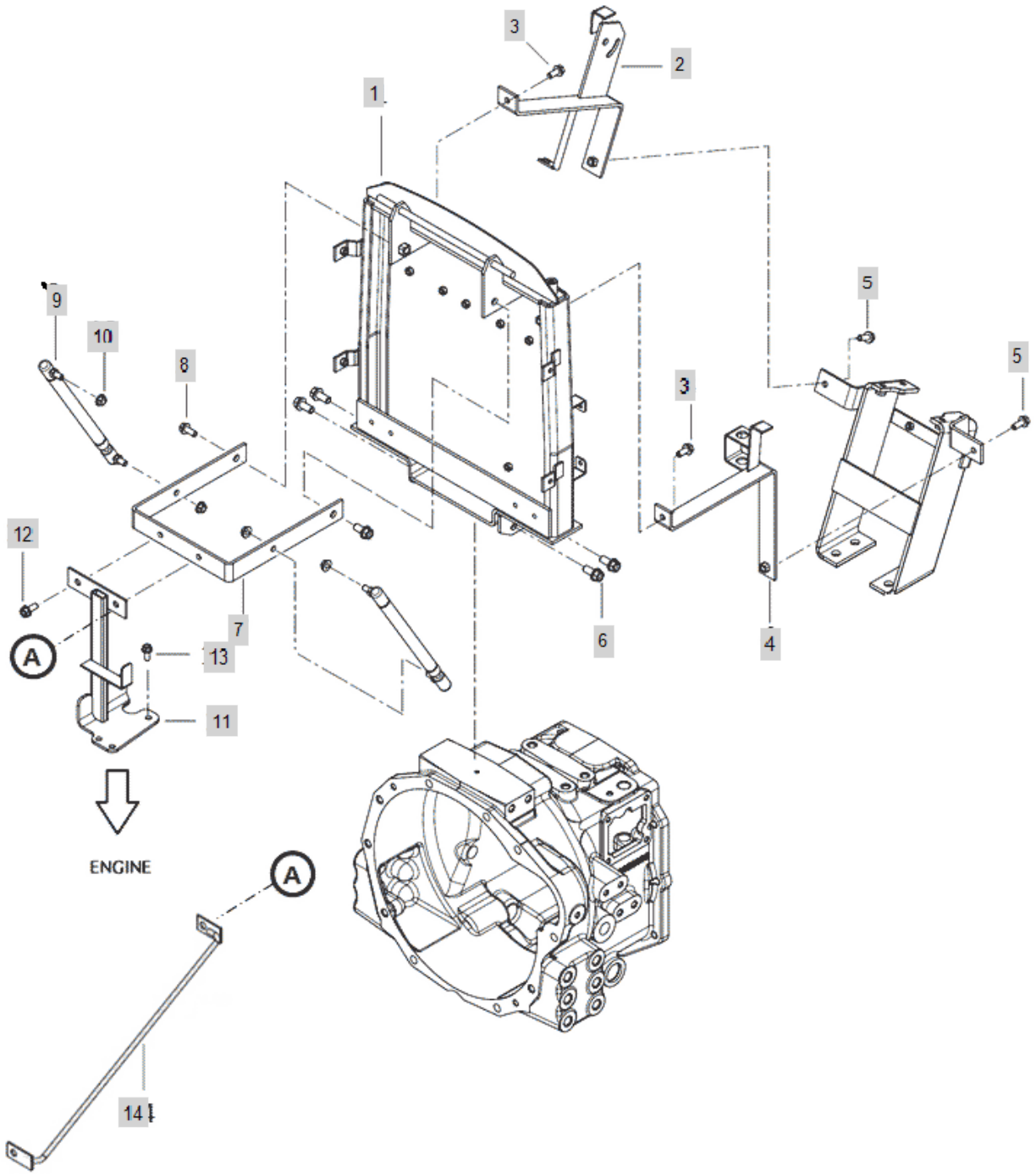

FIG C137B-3 3015H	BONNET SUPPORT (2018.02)	Year/Month 2020/01

KeyNo.	Part Number	Part Name	Quantity	Other
1	TA00040882F	HINGE SUPPORT, BONNET	1	
2	TA00040876C	BRACKET R, SUPPORT	1	
3	26106-080182	SCREW,HEXFLANGEHEADCAP	2	
4	TA00040868D	BRACKET L, SUPPORT	1	
5	26106-080202	SQR FLANGE BOLT	3	
6	26106-100222	BOLT	4	
7	TA00040848A	BRACKET L	1	
8	26106-100202	HEX BOLT, (10-20)	2	
9	TA00041773A	GAS SPRING	2	
10	TA00040849B	BRACKET L	1	
11	TA00040850B	BRACKET	1	
12	26367-080002	HEX FLANGE NUT (Φ8)	4	
13	26106-060252	Screw, (6-25)	2	
14	TA00041934B	SUPPORT ASSY(T4)	1	

FIG C138 3015H	FENDER	Year/Month 2020/01

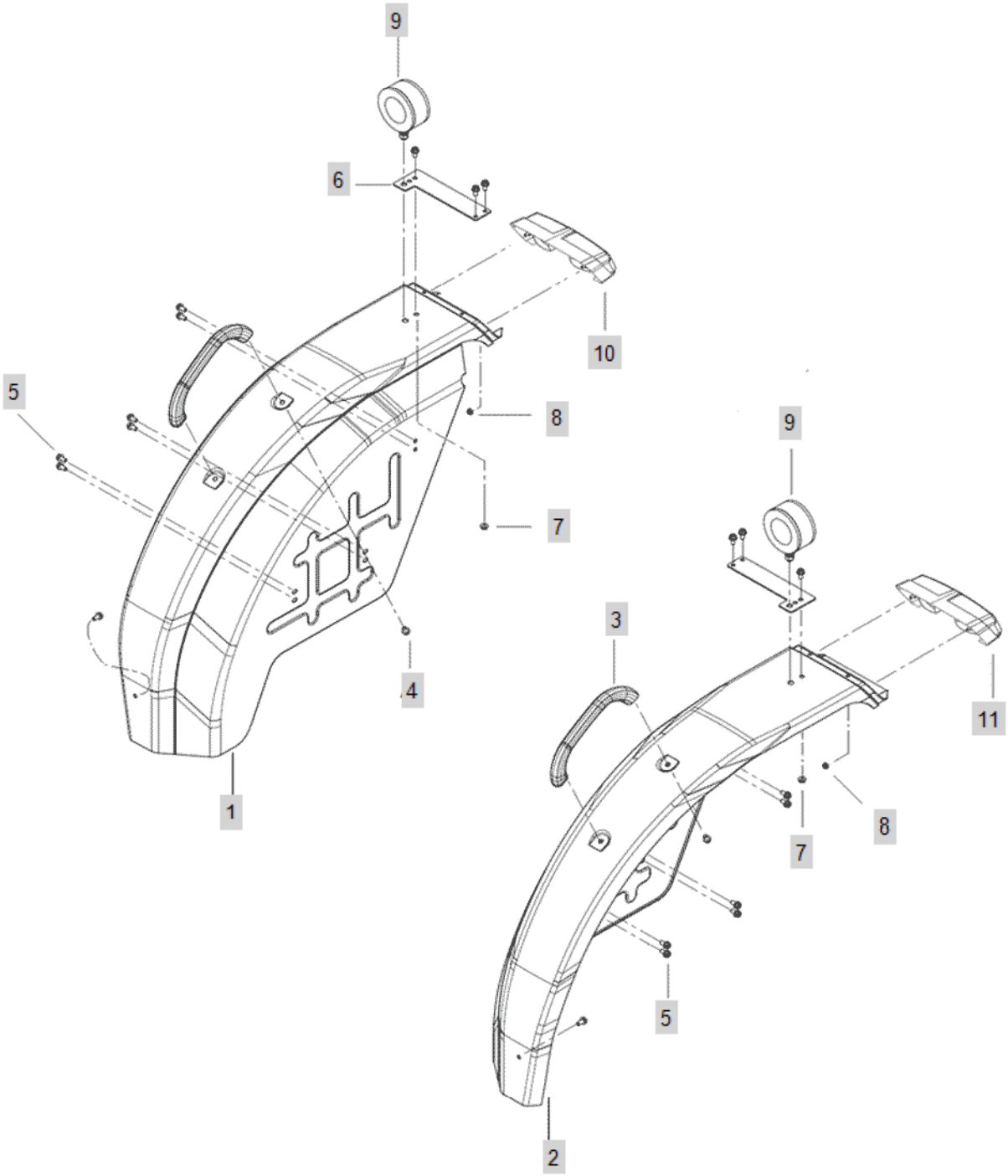

FIG C138 3015H	FENDER	Year/Month 2020/01

KeyNo.	Part Number	Part Name	Quantity	Other
1	TA00040568B	FENDER R ASSY	1	
2	TA00039644B	FENDER L ASSY	1	
3	NTD8120000A3	FENDERGRIP	2	
4	26106-080122	Bolt, Hexa (8-12)	4	
5	26106-080162	SCREW,HEXFLANGEHEADCAP	20	
6	TA00039326B	FENDER BRK	2	
7	26367-080002	HEX FLANGE NUT (Φ8)	2	
8	26367-060002	Nut, Hexa (Φ6)	4	
9	TZD2120000C	DIRECTION LAMP ASS'Y	2	
10	NTD2170000A3	COMBINATIONLAMP(R)	1	
11	NTD2160000A3	COMBINATIONLAMP(L)	1	

FIG C139 3015H	FOOT REST ASS'Y	Year/Month 2020/01

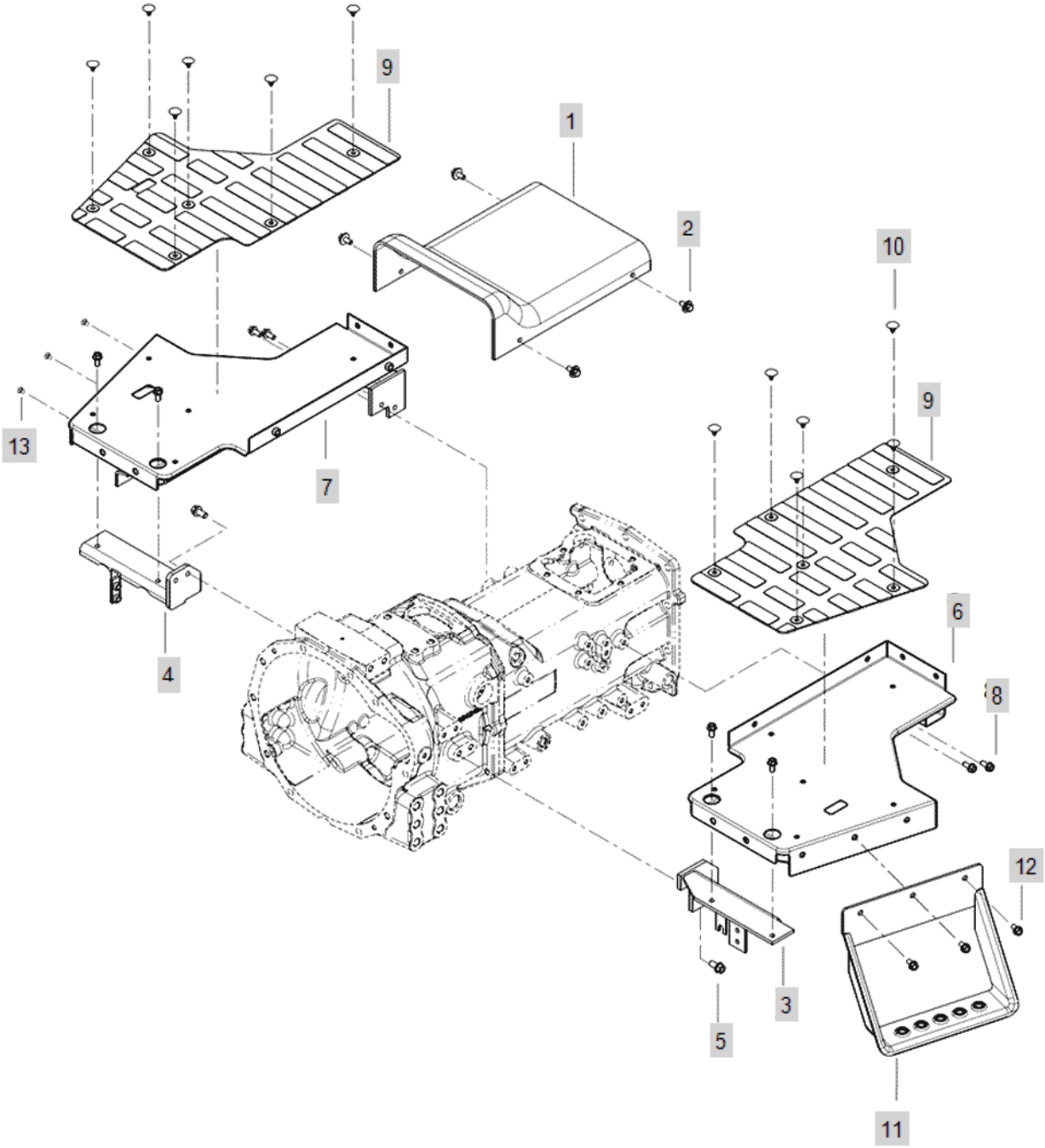

FIG C139 3015H	FOOT REST ASS'Y	Year/Month 2020/01

KeyNo.	Part Number	Part Name	Quantity	Other
1	TA00039302B	COVER	1	
2	26014-080202	Bolt, Hexa (8-20)	4	
3	TA00042463A	HST SUPPORT ASS'Y(RH)	1	
4	TA00042495B	SPPORT, STEP ASSY	1	
5	26106-100202	HEX BOLT, (10-20)	2	
6	TA00039343B	FOOT REST ASS'Y(L)	1	
7	TA00042473B	FOOT REST ASS'Y(RIGHT)	1	
8	26106-080182	SCREW,HEXFLANGEHEADCAP	10	
9	TA00040393B	MAT	2	
10	TTE0400000A4	CAP	12	
11	TA00042391A	SUPPORT FOOT REST ASS'Y	1	
12	26106-080162	SCREW,HEXFLANGEHEADCAP	3	
13	TB26060000A4	PLUGRUBBER	3	

FIG C141A-1 3015H	FUEL TANK	Year/Month 2020/01

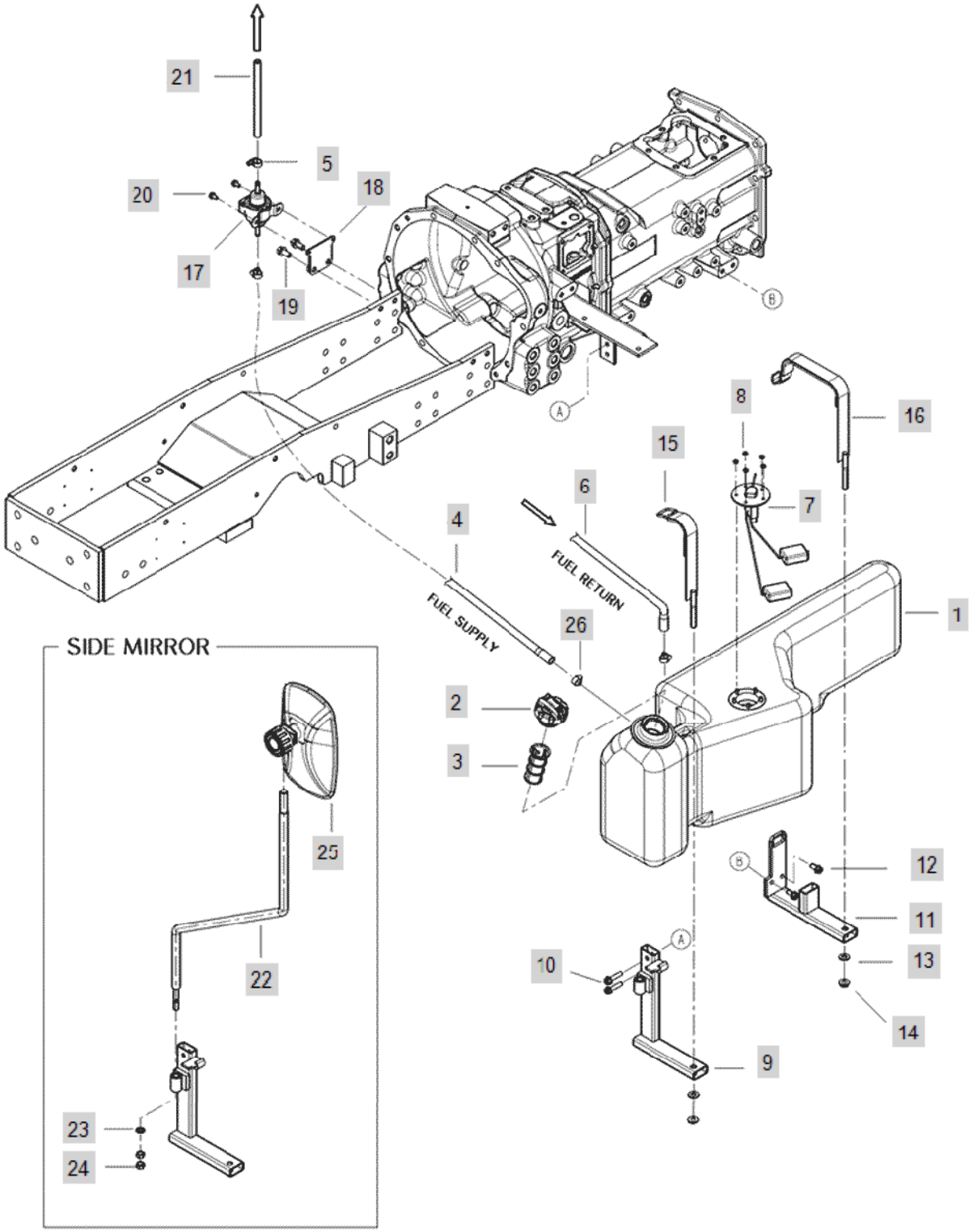

FIG C141A-1 3015H	FUEL TANK	Year/Month 2020/01

KeyNo.	Part Number	Part Name	Quantity	Other
1	TA00039460B	FUEL TANK	1	
2	TA00037880A	FUEL CAP	1	
3	TA00027741A	FILTER STRAINER	1	
4	TA00041750A	FUEL LINE(750)	1	
5	23080-013000	Clamp, Hose (Φ13)	3	
6	TA00041751A	FUEL LINE(1000)	1	
7	HA00000977B	FUEL SENSOR	1	
8	26712-050002	NUTM5	5	
9	TA00040157A	FRONT SUPPORT	1	
10	26106-080352	SCREW,HEXFLANGEHEADCAP	2	
11	TA00040154B	REAR SUPPORT	1	
12	26106-080182	SCREW,HEXFLANGEHEADCAP	2	
13	22137-100000	WASHER, PLAIN (Φ 10)	2	
14	26367-100002	NUT,HEXAGONFLANGE	2	
15	TA00040222A	FRONT BAND ASSY	1	
16	TA00040215A	REAR BAND	1	
17	HF20190000A2	FUEL FEED PUMP	1	
18	TC51420000B	STAY ASS'Y, PUMP	1	
19	26106-100202	HEX BOLT, (10-20)	2	
20	26106-060122	HEX BOLT (6-12)	2	
21	TA00055013A	HOSE_FUEL	1	
21-1	TA00025687A	FUEL HOSE 195	1	delete
21-2	TA00048401A	FUEL HOSE (165)	1	delete
22	TA00040824C	STAY, BACK MIRROR	1	
23	22217-100000	WASHER, SPRING (Φ 10)	1	
24	26716-100002	Nut, Hexa (Φ10)	2	
25	TCF5170000B3	SIDE MIRROR	1	
26	23080-015000	Clamp, Hose (Φ15)	2	

FIG C141A-2 3015H	FUEL TANK(2017.01)	Year/Month 2020/01

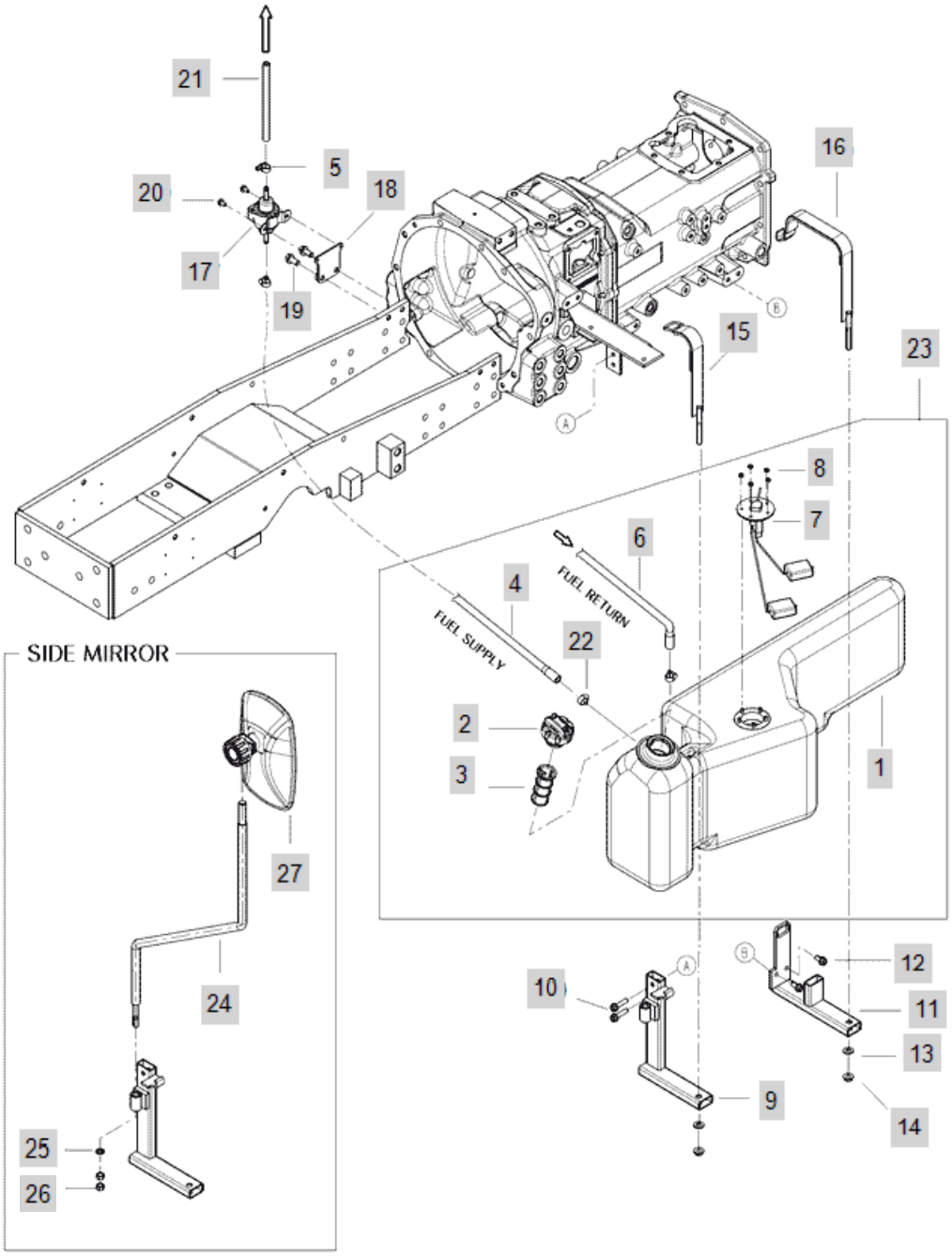

FIG C141A-2 3015H	FUEL TANK(2017.01)	Year/Month 2020/01

KeyNo.	Part Number	Part Name	Quantity	Other
1	TA00039460B	FUEL TANK	1	
2	TA00037880A	FUEL CAP	1	
3	TA00027741A	FILTER STRAINER	1	
4	TA00041750A	FUEL LINE(750)	1	
5	23080-013000	Clamp, Hose (Φ13)	3	
6	TA00041751A	FUEL LINE(1000)	1	
7	HA00000977B	FUEL SENSOR	1	
8	26712-050002	NUTM5	5	
9	TA00040157A	FRONT SUPPORT	1	
10	26106-080352	SCREW,HEXFLANGEHEADCAP	2	
11	TA00040154B	REAR SUPPORT	1	
12	26106-080182	SCREW,HEXFLANGEHEADCAP	2	
13	22137-100000	WASHER, PLAIN (Φ 10)	2	
14	26367-100002	NUT,HEXAGONFLANGE	2	
15	TA00040222B	FRONT BAND ASSY	1	
16	TA00040215B	REAR BAND	1	
17	HF20190000A2	FUEL FEED PUMP	1	
18	TC51420000B	STAY ASS'Y, PUMP	1	
19	26106-100202	HEX BOLT, (10-20)	2	
20	26106-060122	HEX BOLT (6-12)	2	
21	TA00055013A	HOSE_FUEL	1	
21-1	TA00048401A	FUEL HOSE (165)	1	delete
22	23080-015000	Clamp, Hose (Φ15)	2	
23	TA00040370E	TANK, FUEL ASSY	1	
24	TA00040824C	STAY, BACK MIRROR	1	
25	22217-100000	WASHER, SPRING (Φ 10)	1	
26	26716-100002	Nut, Hexa (Φ10)	2	
27	TCF5170000B3	SIDE MIRROR	1	

FIG C141A-3 3015H	FUEL TANK(2017.01)	Year/Month 2020/01

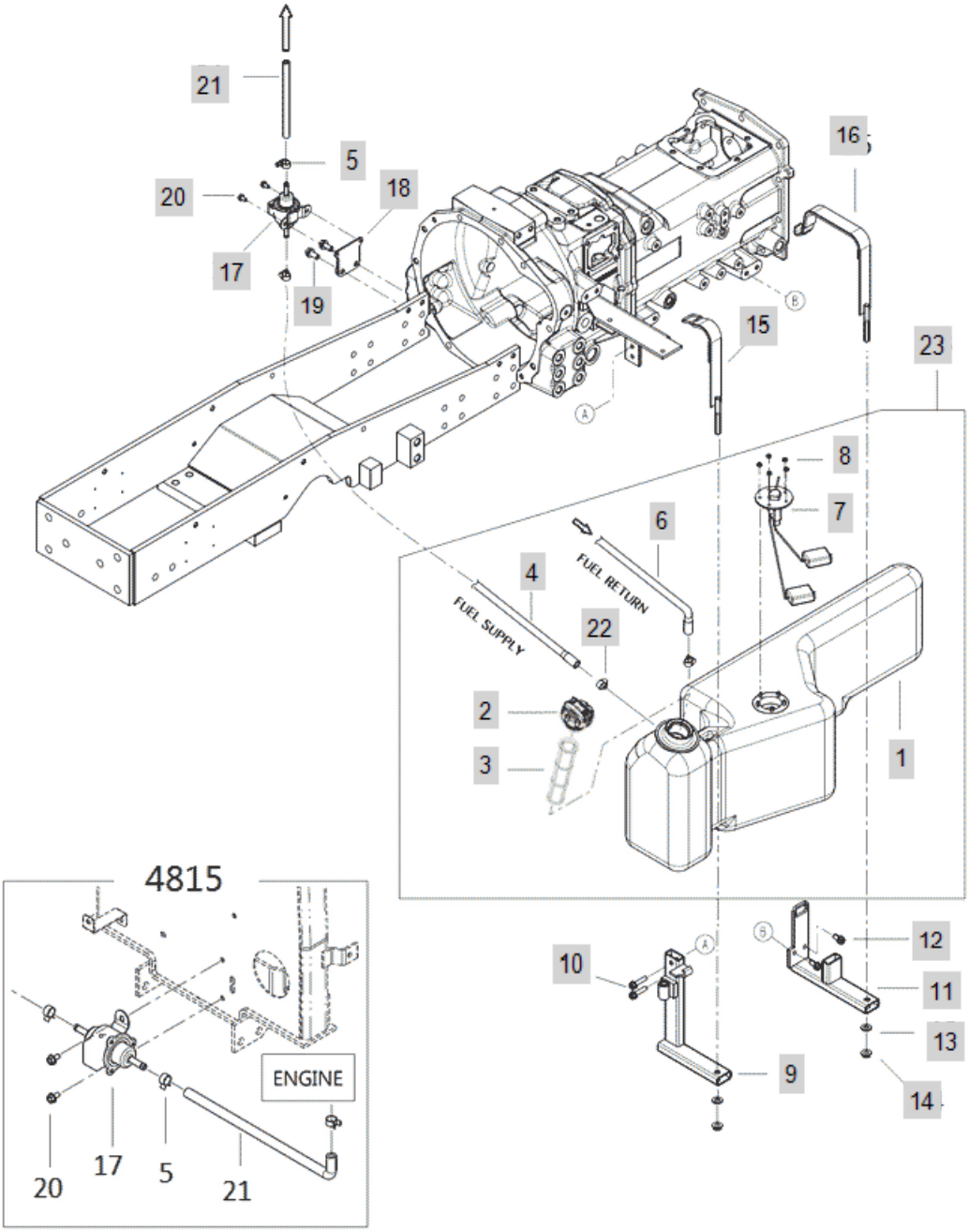

FIG C141A-3 3015H	FUEL TANK(2017.01)	Year/Month 2020/01

KeyNo.	Part Number	Part Name	Quantity	Other
1	TA00039460B	FUEL TANK	1	
2	TA00037880A	FUEL CAP	1	
3	TA00056576A	FUEL TANK STRAINER	1	
4	TA00041750A	FUEL LINE(750)	1	
5	23080-013000	Clamp, Hose (Φ13)	3	
6	TA00041751A	FUEL LINE(1000)	1	
7	HA00000977B	FUEL SENSOR	1	
8	26712-050002	NUTM5	5	
9	TA00040157A	FRONT SUPPORT	1	
10	26106-080352	SCREW,HEXFLANGEHEADCAP	2	
11	TA00040154B	REAR SUPPORT	1	
12	26106-080182	SCREW,HEXFLANGEHEADCAP	2	
13	22137-100000	WASHER, PLAIN (Φ 10)	2	
14	26367-100002	NUT,HEXAGONFLANGE	2	
15	TA00040222B	FRONT BAND ASSY	1	
16	TA00040215B	REAR BAND	1	
17	HF20190000A2	FUEL FEED PUMP	1	
18	TC51420000B	STAY ASS'Y, PUMP	1	
19	26106-100202	HEX BOLT, (10-20)	2	
20	26106-060122	HEX BOLT (6-12)	2	
21	TA00048401A	FUEL HOSE (165)	1	
22	23080-015000	Clamp, Hose (Φ15)	2	
23	TA00040370E	TANK, FUEL ASSY	1	

FIG C144A-1 3015H	NAME PLATE	Year/Month 2020/01

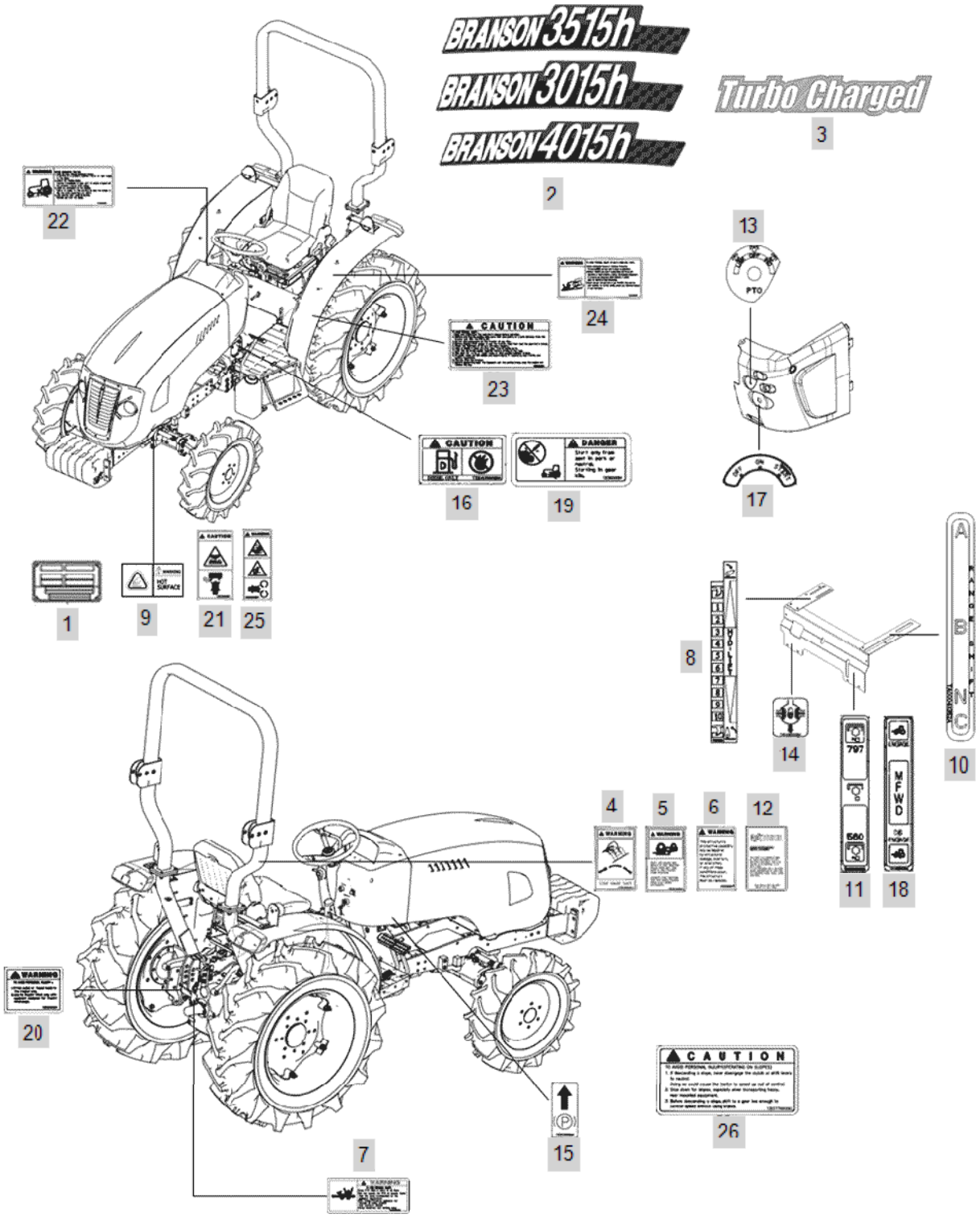

FIG C144A-1 3015H	NAME PLATE	Year/Month 2020/01

KeyNo.	Part Number	Part Name	Quantity	Other
1	TA00043089A	NAME PLATE	1	
2	TA00043092A	NAME PLATE, BONNET	2	
4	NTE5150000C4	NAMEPLATE,SEATBELT	1	
5	NTE5210000C4	NAMEPLATE,SAFETY	1	
6	NTE5220000C4	NAMEPLATE,DANGER	1	
7	TA00015596B	PTO WARNING PLATE	1	
8	TA00036922A	LIFT STICKER	1	
9	TA00036924A	WARNING NAMEPLAET	1	
10	TA00043352A	NAME PLATE, SUB SHIFT	1	
11	TA00040423B	NAME PLATE, PTO	1	
12	TA00040534A	ROPS, NAME PLATE	1	
13	TA00041042A	NAME PLATE	1	
14	TZE4130000B4	LABEL,DIFFERENTIAL	1	
15	TZE4150000A4	LABEL, PAKING BRAKE	1	
16	TZE4190000C4	LABEL, FUEL CAUTION	1	
17	TZE4330000B4	MARK, MAIN SWITCH	1	
18	TZE5050000B4	LABEL,FRONTDRIVE	1	
19	TZE5110000C4	MANE PLATE, START	1	
20	TZE5120000B4	NAME PLATE, EQUIP	1	
21	TZE5130000C4	NAME PLATE, CAUTION	1	
22	TZE5140000B3	NAME PLATE, DOWN LOAD	1	
23	TZE5160000B3	NAME PLATE, SAFETY	1	
24	TZE5170000B3	NAME PLATE, ROPS CAUTION	1	
25	TZE5180000C4	NAME PLATE, REVOLUTION	1	
26	TZE5770000B3	MARK,WARNING	1	

FIG C144B-2 3015H	NAME PLATE	Year/Month 2020/01

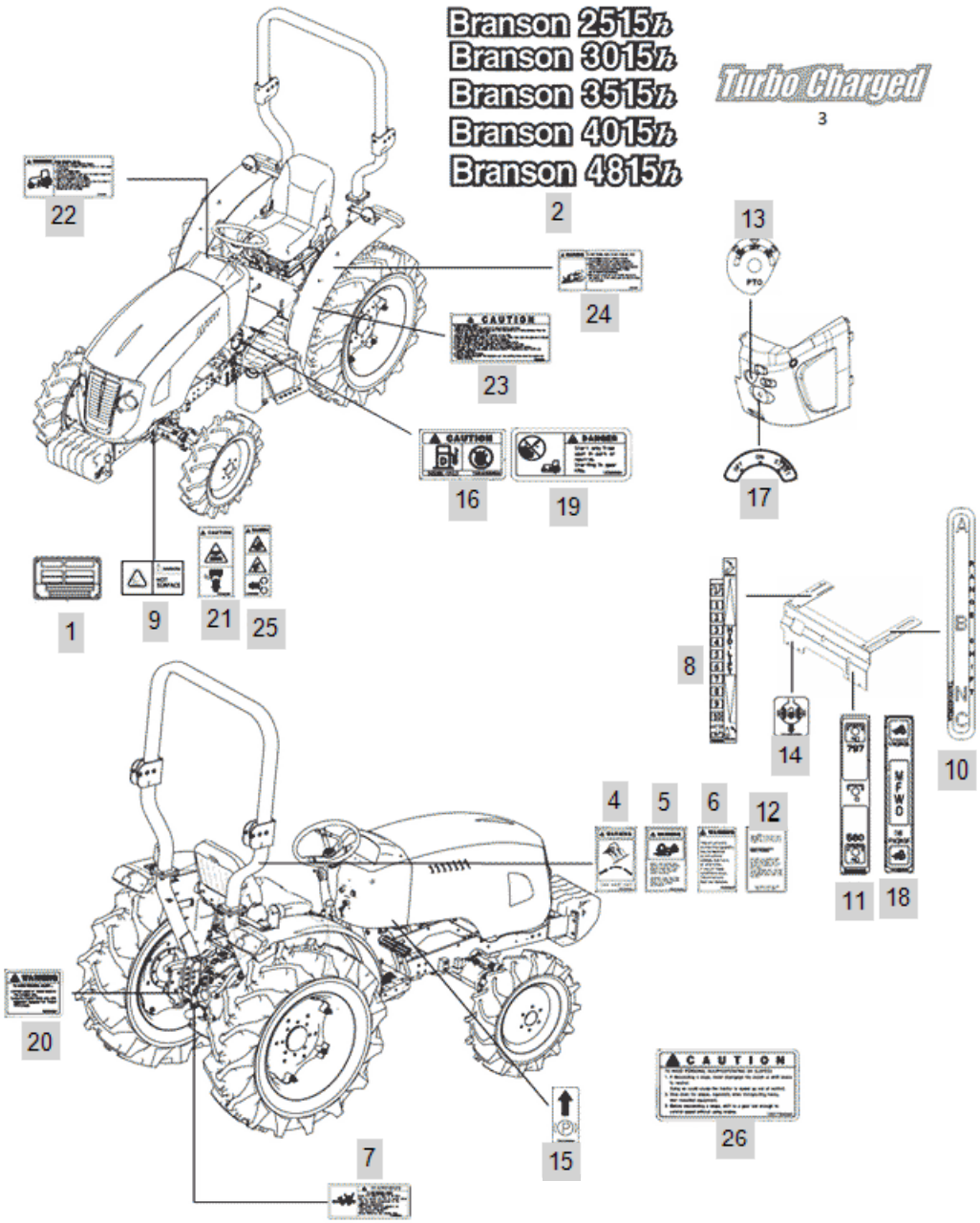

FIG C144B-2 3015H	NAME PLATE	Year/Month 2020/01

KeyNo.	Part Number	Part Name	Quantity	Other
1	TA00043089A	NAME PLATE	1	
2	TA00043092B	NAME PLATE, BONNET	2	
4	NTE5150000C4	NAMEPLATE,SEATBELT	1	
5	NTE5210000C4	NAMEPLATE,SAFETY	1	
6	NTE5220000C4	NAMEPLATE,DANGER	1	
7	TA00015596B	PTO WARNING PLATE	1	
8	TA00036922A	LIFT STICKER	1	
9	TA00036924A	WARNING NAMEPLAET	1	
10	TA00043352A	NAME PLATE, SUB SHIFT	1	
11	TA00061888A	NAME PLATE, PTO SHIFT	1	
11-1	TA00058176A	NAME PLATE, PTO SHIFT	1	DELETE
12	TA00040534A	ROPS, NAME PLATE	1	
13	TA00041042A	NAME PLATE	1	
14	TZE4130000B4	LABEL,DIFFERENTIAL	1	
15	TZE4150000A4	LABEL, PAKING BRAKE	1	
16	TZE4190000C4	LABEL, FUEL CAUTION	1	
17	TZE4330000B4	MARK, MAIN SWITCH	1	
18	TZE5050000B4	LABEL,FRONTDRIVE	1	
19	TZE5110000C4	MANE PLATE, START	1	
20	TZE5120000B4	NAME PLATE, EQUIP	1	
21	TZE5130000C4	NAME PLATE, CAUTION	1	
22	TZE5140000B3	NAME PLATE, DOWN LOAD	1	
23	TZE5160000B3	NAME PLATE, SAFETY	1	
24	TZE5170000B3	NAME PLATE, ROPS CAUTION	1	
25	TZE5180000C4	NAME PLATE, REVOLUTION	1	
26	TZE5770000B3	MARK,WARNING	1	

FIG C146 3015H	TOP LINK, LIFT LINK	Year/Month 2020/01

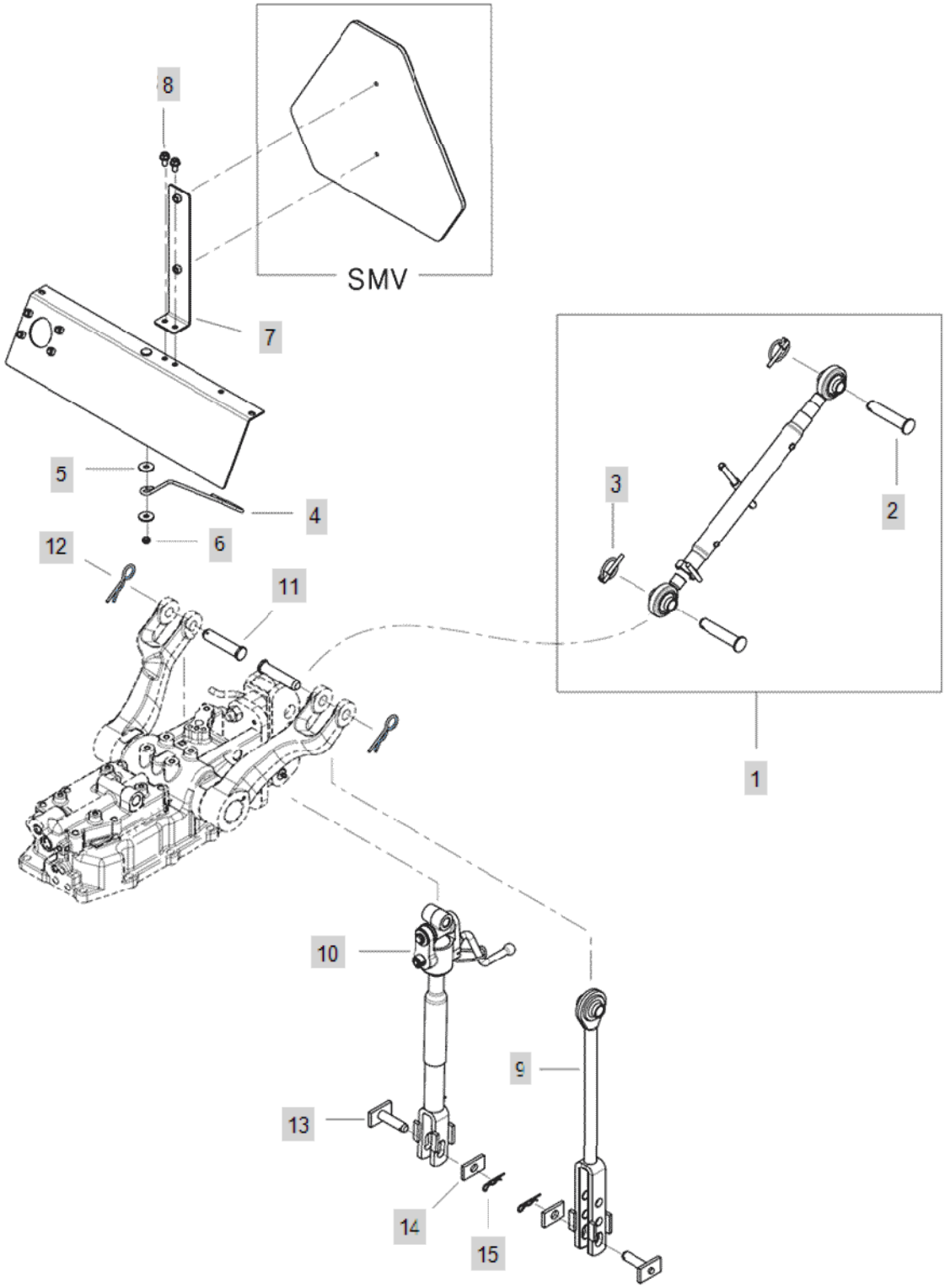

FIG C146 3015H	TOP LINK, LIFT LINK	Year/Month 2020/01

KeyNo.	Part Number	Part Name	Quantity	Other
1	TA00039541A	TOP LINK	1	
2	TTE6130000A	HEAD PIN	2	
3	TJ30110000A	PIN SET -> TJ30110000A4	2	
4	TCG1130000B	HOOK (TOP LINK)	1	
5	22157-080000	WASHER, PLAIN (Φ 08)	2	
6	26347-080002	Unut	1	
7	TA00039355B	SMV BRK ASSY	1	
8	26106-080162	SCREW,HEXFLANGEHEADCAP	2	
9	TA00040653A	LIFT LINK ASS'Y	1	
10	TA00040654A	LIFT LINK ASS'Y(R)	1	
11	TTE7290000B	PIN	2	
12	TTE7010000A4	SNAPPIN	2	
13	TTE73000INA4	LIFT YORK PIN	2	
14	TTE7310000A4	STOPPER	2	
15	22360-160000	PIN , SNAP (6Φ)	2	

FIG C150 3015H	LOWER LINK	Year/Month 2020/01

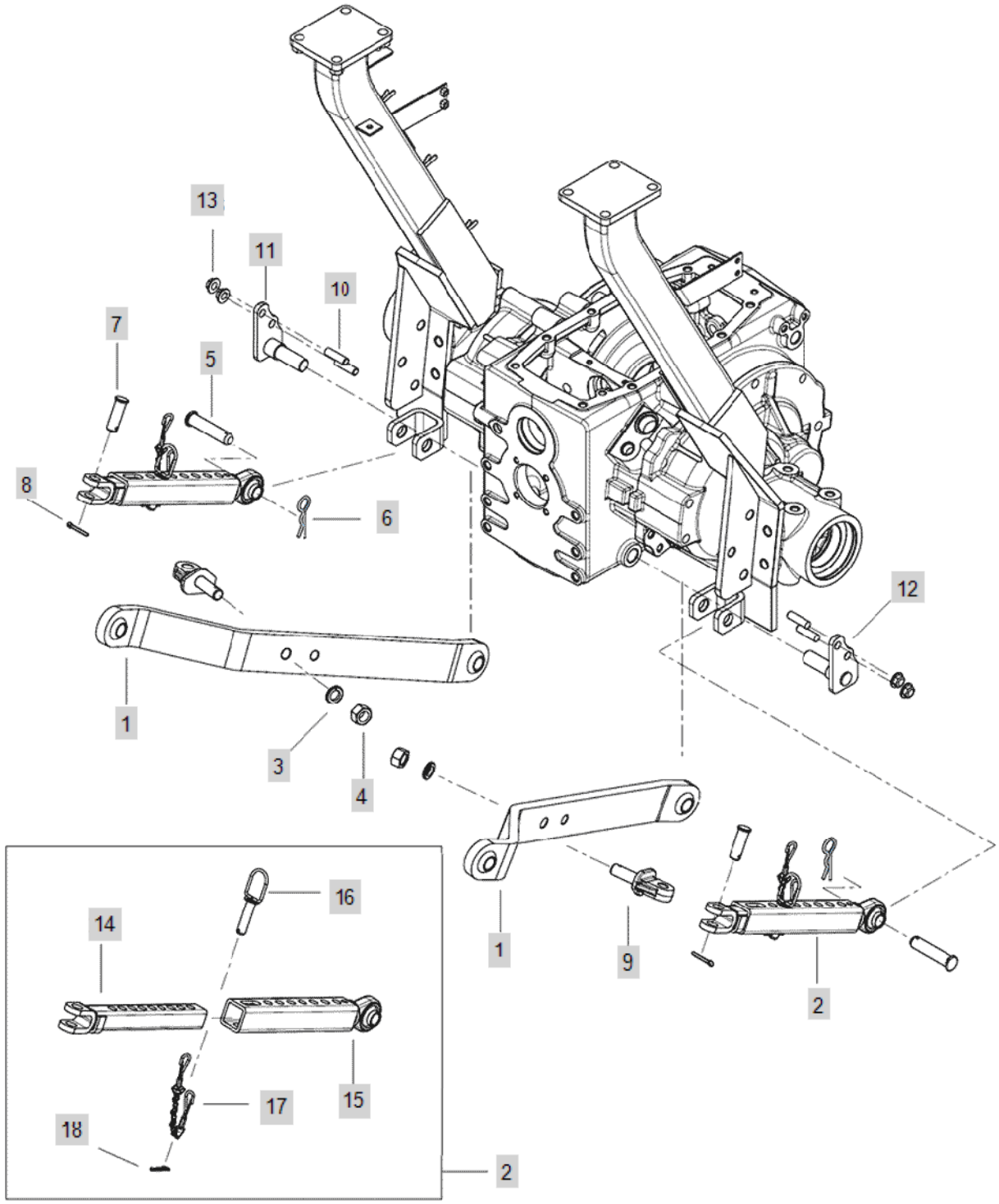

FIG C150 3015H	LOWER LINK	Year/Month 2020/01

KeyNo.	Part Number	Part Name	Quantity	Other
1	TA00042369A	LINK ASS'Y, LOWER	2	
2	TA00041947A	CHECK-BAR	2	
3	22217-180000	WASHER, SPRING (Φ 18)	2	
4	26736-180002	NUT	2	
5	TTE7290000B	PIN	2	
6	TTE7010000A4	SNAPPIN	2	
7	FTF0090000A4	PIN, CHECK CHAIN	2	
8	22417-500320	PIN , COTTER (5-32)	2	
9	TA00016119A	EYE BOLT, LOWER LINK	2	
10	26216-120252	STUD BOLT	4	
11	TA00039356B	LOWER LINK PIN LH ASSY	1	
12	TA00039490B	LOWER LINK PIN RH ASSY	1	
13	26367-120002	NUT	4	
14	TA00041949A	CHECKBAR R	2	
15	TA00041948A	CHECKBAR F	2	
16	FBF0050000A4	CONNECT PIN -> FBF0020000A2	2	
17	FBF0060000A4	CONNECT LINK	2	
18	22360-140000	PIN , SNAP (4Φ)	2	

FIG C152-1 3015H	DRAWBAR HITCH	Year/Month 2020/01

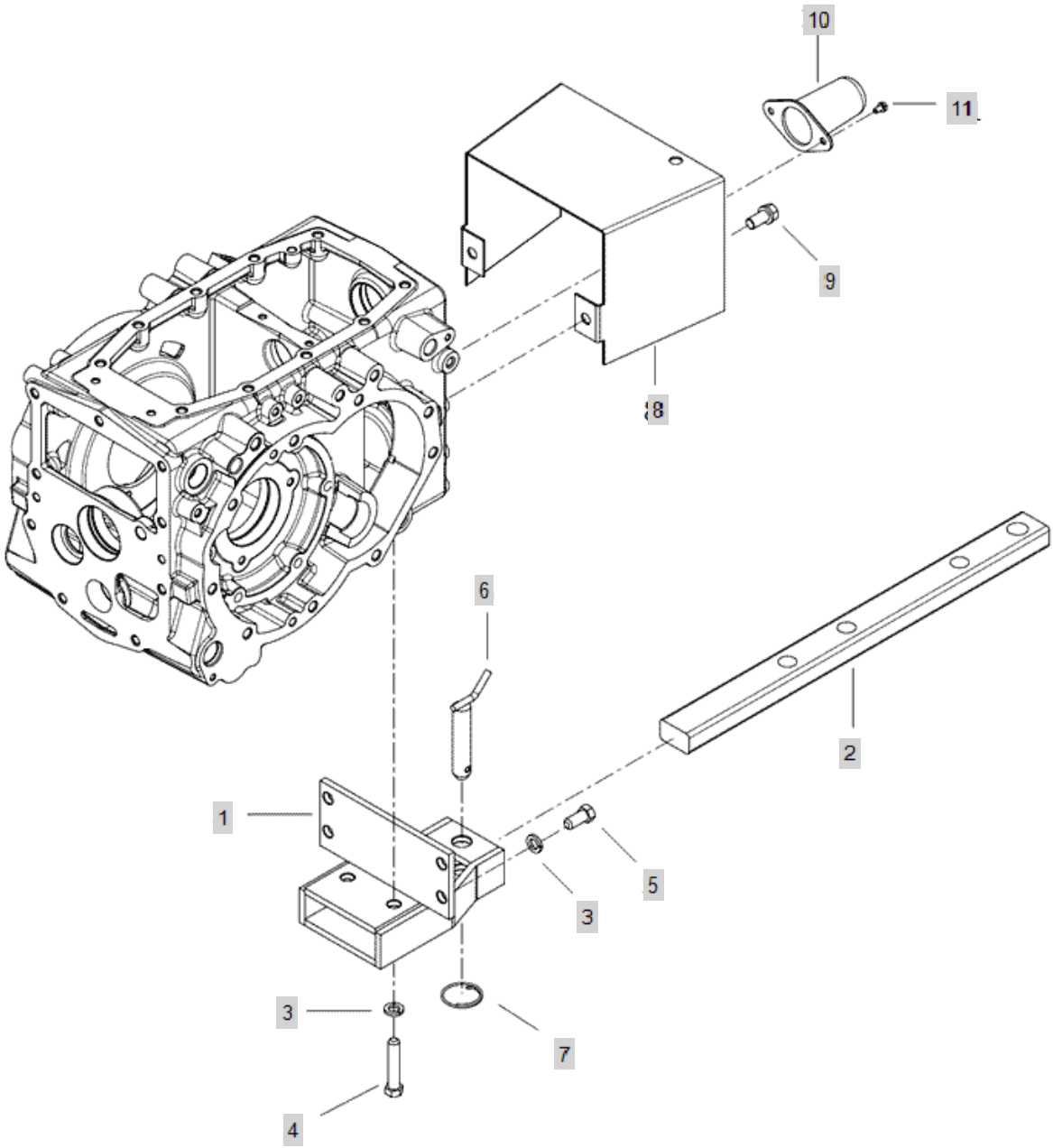

FIG C152-1 3015H	DRAWBAR HITCH	Year/Month 2020/01

KeyNo.	Part Number	Part Name	Quantity	Other
1	TA00039407A	DRAWBAR BRK ASSY	1	
2	NTF20100INB4	DRAW BAR	1	
3	22217-140000	WASHER, SPRING (Φ 14)	6	
4	26116-140802	BOLT	2	
5	26116-140302	HEXBOLT	4	
6	TB46060000A4	HITCHPIN22	1	
7	TB46070000A4	RING	1	
8	TA00039391B	PTO COVER	1	
9	26013-140302	BOLT(+SW)	2	
10	TT80030000A3	P.T.OCOVER	1	
11	26013-060122	Bolt, Hexa (6-12)	2	

FIG C152-2 3015H	DRAWBAR HITCH	Year/Month 2020/01

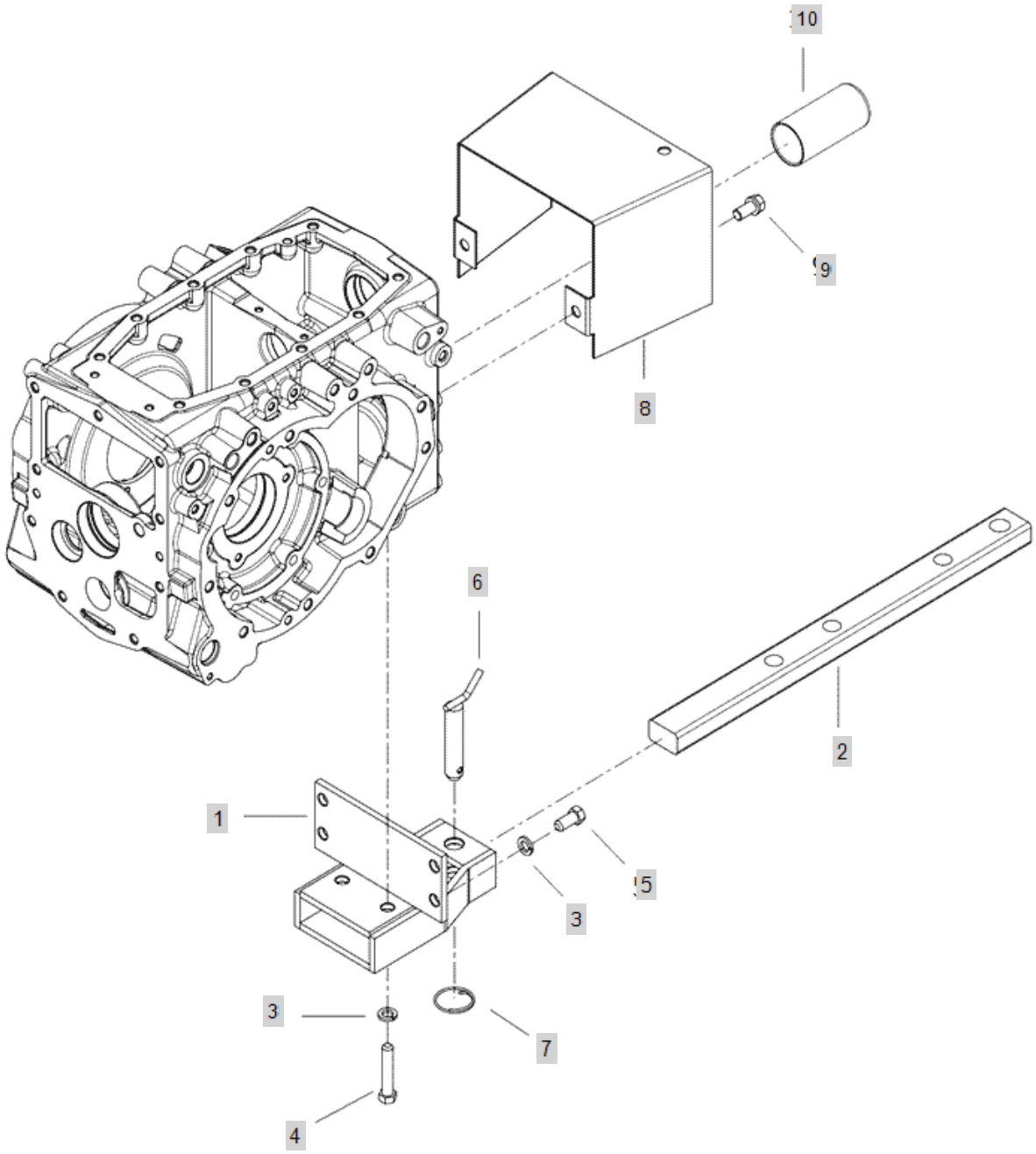

FIG C152-2 3015H	DRAWBAR HITCH	Year/Month 2020/01

KeyNo.	Part Number	Part Name	Quantity	Other
1	TA00039407A	DRAWBAR BRK ASSY	1	
2	NTF20100INB4	DRAW BAR	1	
3	22217-140000	WASHER, SPRING (Φ 14)	6	
4	26116-140802	BOLT	2	
5	26116-140302	HEXBOLT	4	
6	TB46060000A4	HITCHPIN22	1	
7	TB46070000A4	RING	1	
8	TA00039391B	PTO COVER	1	
9	26013-140302	BOLT(+SW)	2	
10	TA00046868A	COVER, PTO	1	

FIG C158A-1 3015H	ROPS FRAME ASS'Y	Year/Month 2020/01

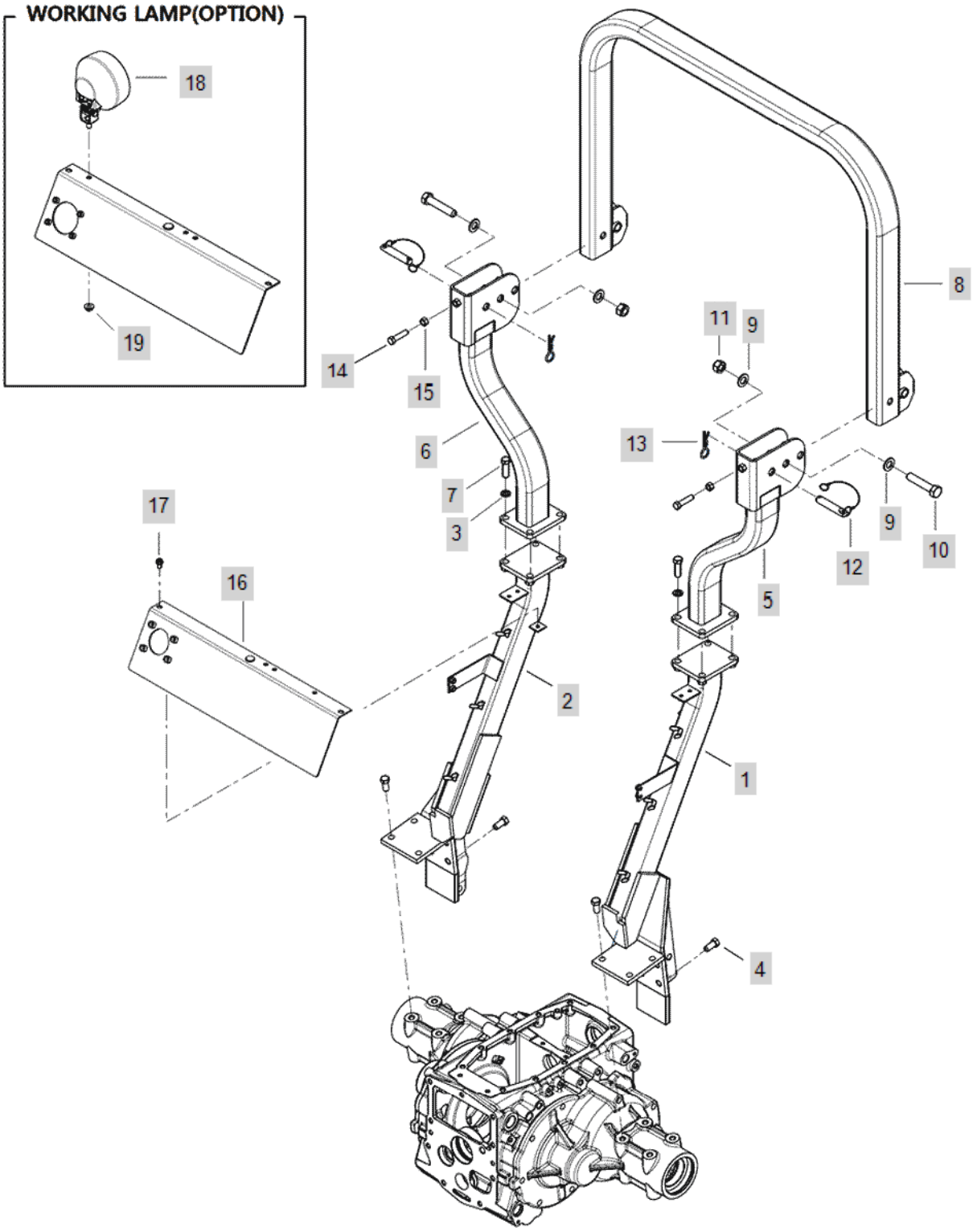

FIG C158A-1 3015H	ROPS FRAME ASS'Y	Year/Month 2020/01

KeyNo.	Part Number	Part Name	Quantity	Other
1	TA00040846B	FRAME ASS'Y(R), LOWER	1	
2	TA00040789B	LOWER FRAME ASSY	1	
3	22217-140000	WASHER, SPRING (Φ 14)	8	
4	26013-140302	BOLT(+SW)	14	
5	TA00039014C	LOWER FRMAE ASS`Y	1	
6	TA00039361B	LOWER FRAME ASSY (RH)	1	
7	26116-140452	BOLT	8	
8	TA00039011A	ROPS ASSY	1	
9	22137-180000	WASHER, PLAIN (Φ 18)	4	
10	26116-180902	BOLT	2	
11	26347-180002	NUT	2	
12	NTF8400000A3	ROPSPIN	2	
13	TTE7010000A4	SNAPPIN	2	
14	26116-120504	BOLT	2	
15	26716-120002	BOLT,CYLINDER HEAD(B)	2	
16	TA00039353D	REAR SUPPORT ASSY	1	
17	26106-080162	SCREW,HEXFLANGEHEADCAP	2	
18	CEG6250000A2	Lamp Ass'y, Working	1	
19	26367-080002	HEX FLANGE NUT (Φ8)	1	

FIG C158A-2 3015H	ROPS FRAME ASS'Y	Year/Month 2020/01

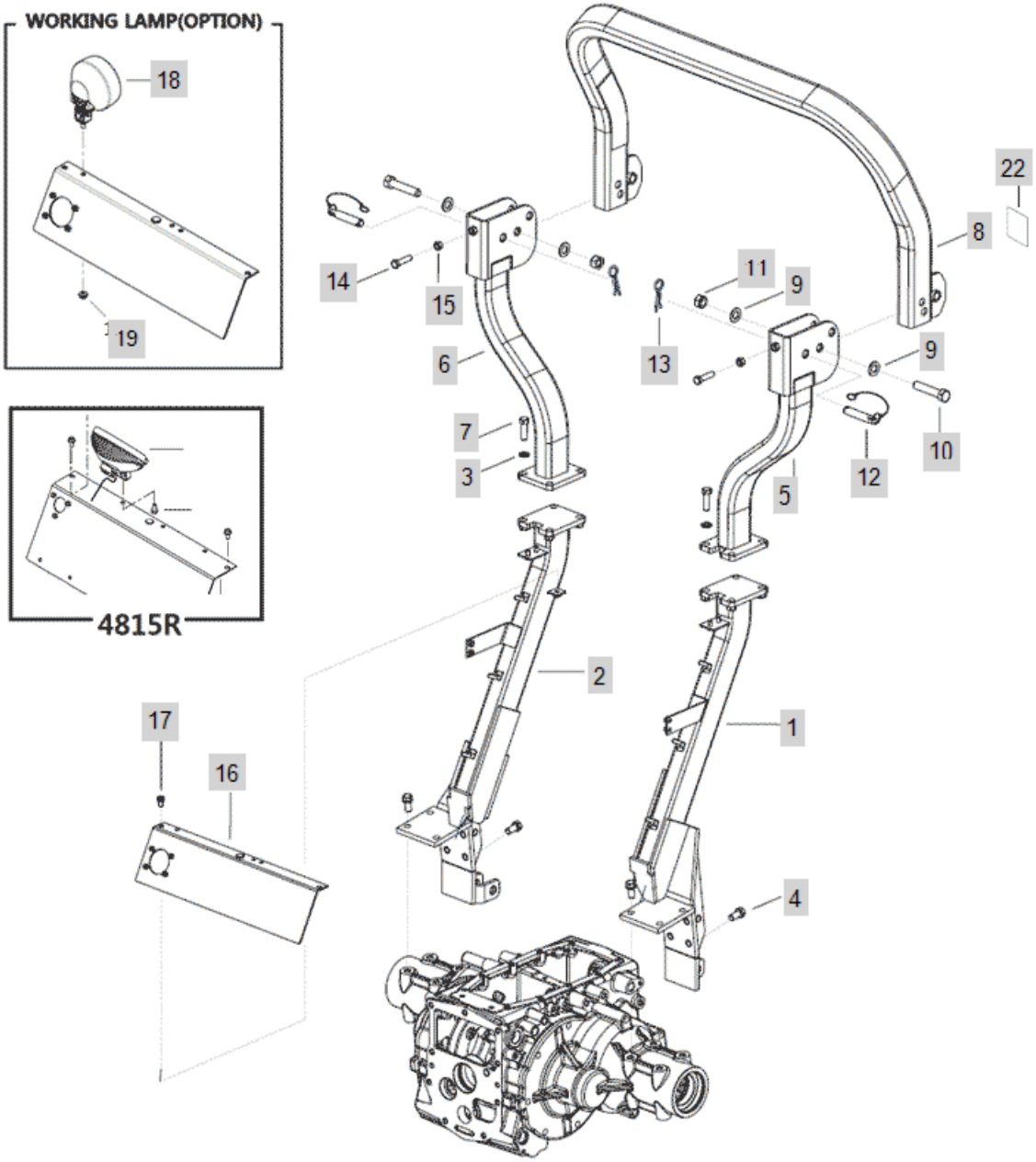

FIG C158A-2 3015H	ROPS FRAME ASS'Y	Year/Month 2020/01

KeyNo.	Part Number	Part Name	Quantity	Other
1	TA00040846B	FRAME ASS'Y(R), LOWER	1	
2	TA00040789B	LOWER FRAME ASSY	1	
3	22217-140000	WASHER, SPRING (Φ 14)	8	
4	26013-140302	BOLT(+SW)	14	
5	TA00039014C	LOWER FRMAE ASS`Y	1	
6	TA00039361B	LOWER FRAME ASSY (RH)	1	
7	26116-140452	BOLT	8	
8	TA00046791B	ROPS ASSY(US)	1	
9	22137-180000	WASHER, PLAIN (Φ 18)	4	
10	26116-180902	BOLT	2	
11	TA00047305A	U-NUT	2	
12	NTF8400000A3	ROPSPIN	2	
13	TTE7010000A4	SNAPPIN	2	
14	26116-120504	BOLT	2	
15	26716-120002	BOLT,CYLINDER HEAD(B)	2	
16	TA00039353D	REAR SUPPORT ASSY	1	
17	26106-080162	SCREW,HEXFLANGEHEADCAP	2	
18	CEG6250000A2	Lamp Ass'y, Working	1	
19	26367-080002	HEX FLANGE NUT (Φ8)	1	
22	TA00060593A	REFLECTOR	2	ADDITION

FIG C161.1A-1 3015H	ENGINE SUB	Year/Month 2020/01

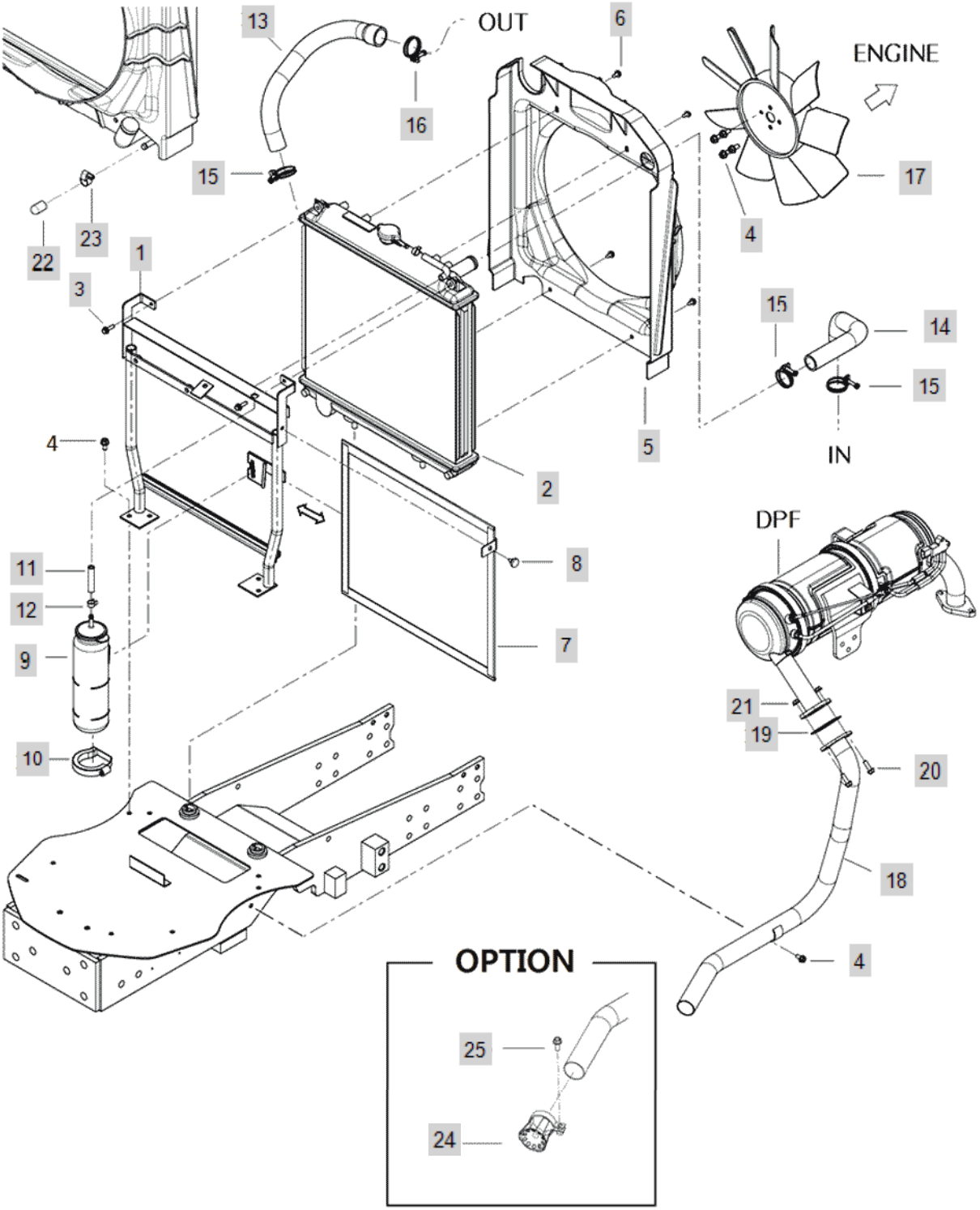

FIG C161.1A-1 3015H	ENGINE SUB	Year/Month 2020/01

KeyNo.	Part Number	Part Name	Quantity	Other
1	TA00039399D	BRACKET ASS'Y	1	
1-1	TA00042694A	BRACKET ASSY	1	
2	HRA1203000B	RADIATOR	1	
3	26014-060252	Bolt, Hexa (6-25)	2	
4	26106-080162	SCREW,HEXFLANGEHEADCAP	9	
5	TA00040421A	SHROUD	1	
6	HRA1203200A4	TAPPINGSCREW	4	
7	TA00040713C	NET, ASSY	1	
8	CA00009493A	FIX BOILT (BLACK)	1	
9	CA09270000C	TANK ASSY, SUB	1	
10	CA09310000A	SUB TO-> CA09310000A4	1	
11	23980-730330	HOSE	2	
12	23080-013000	Clamp, Hose (Φ13)	1	
13	TA00039707A	HOSE B	1	
14	TA00039706A	HOSE A	1	
15	23010-038000	HOSEBAND	3	
16	23010-040000	HOSEBAND	1	
17	HRA1200800A1	COOLING FAN	1	
18	TA00040589C	PIPE ASS'Y	1	
19	HK0514000EA4	GASKET	1	
20	26106-080252	SCREW,HEXFLANGEHEADCAP	2	
21	26367-080002	HEX FLANGE NUT (Φ8)	2	
22	HRC1201200A4	CAP,COOLER	1	
23	23000-016000	Clip, Hose (Φ16)	1	
24	TA00042357A	EXHAUST ASSY	1	
25	26106-080252	SCREW,HEXFLANGEHEADCAP	1	

FIG C161.1B-1 3015H	ENGINE SUB	Year/Month 2020/01

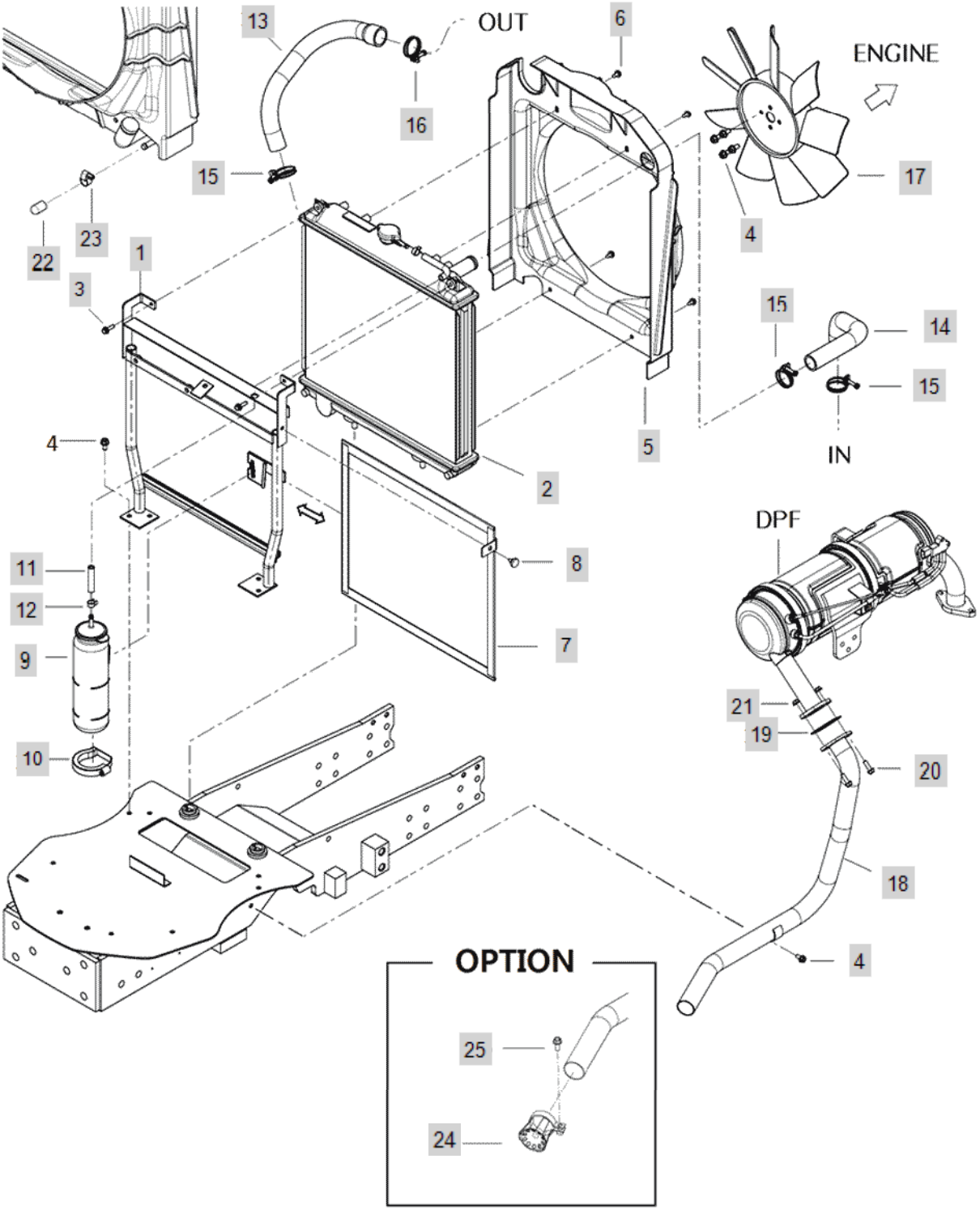

FIG C161.1B-1 3015H	ENGINE SUB	Year/Month 2020/01

KeyNo.	Part Number	Part Name	Quantity	Other
1	TA00039399D	BRACKET ASS'Y	1	
2	HRA1203000B	RADIATOR	1	
3	26014-060252	Bolt, Hexa (6-25)	2	
4	26106-080162	SCREW,HEXFLANGEHEADCAP	9	
5	TA00040421A	SHROUD	1	
6	HRA1203200A4	TAPPINGSCREW	4	
7	TA00040713C	NET, ASSY	1	
8	CA00009493A	FIX BOILT (BLACK)	1	
9	CA09270000C	TANK ASSY, SUB	1	
10	CA09310000A	SUB TO-> CA09310000A4	1	
11	23980-730330	HOSE	2	
12	23080-013000	Clamp, Hose (Φ13)	1	
13	TA00039707A	HOSE B	1	
14	TA00060737A	HOSE A	1	
14-1	TA00039706A	HOSE A	1	DELETE
15	23010-038000	HOSEBAND	3	
16	23010-040000	HOSEBAND	1	
17	TA00044911A	COOLING PAN	1	
18	TA00040589D		1	
19	HK0514000EA4	GASKET	1	
20	26106-080252	SCREW,HEXFLANGEHEADCAP	2	
21	26367-080002	HEX FLANGE NUT (Φ8)	2	
22	HRC1201200A4	CAP,COOLER	1	
23	23000-016000	Clip, Hose (Φ16)	1	
24	TA00042357A	EXHAUST ASSY	1	
25	26106-080252	SCREW,HEXFLANGEHEADCAP	1	

FIG C161.2A-1 3015H	ENGINE SUB-2	Year/Month 2020/01

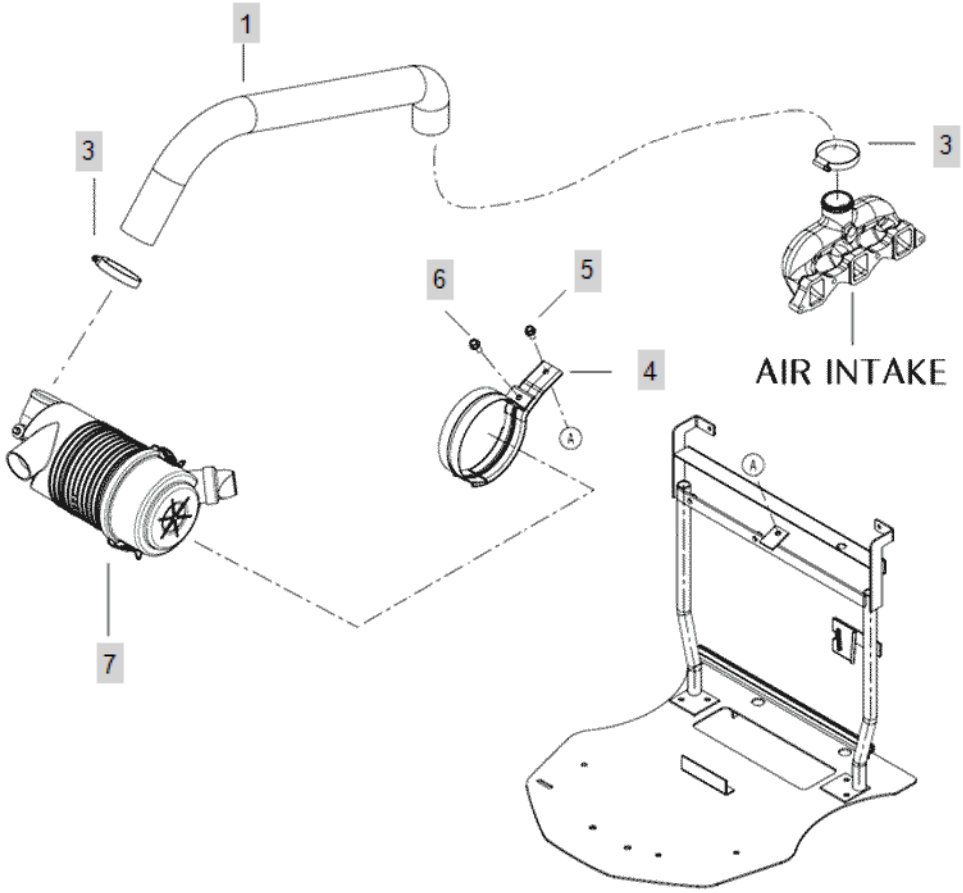

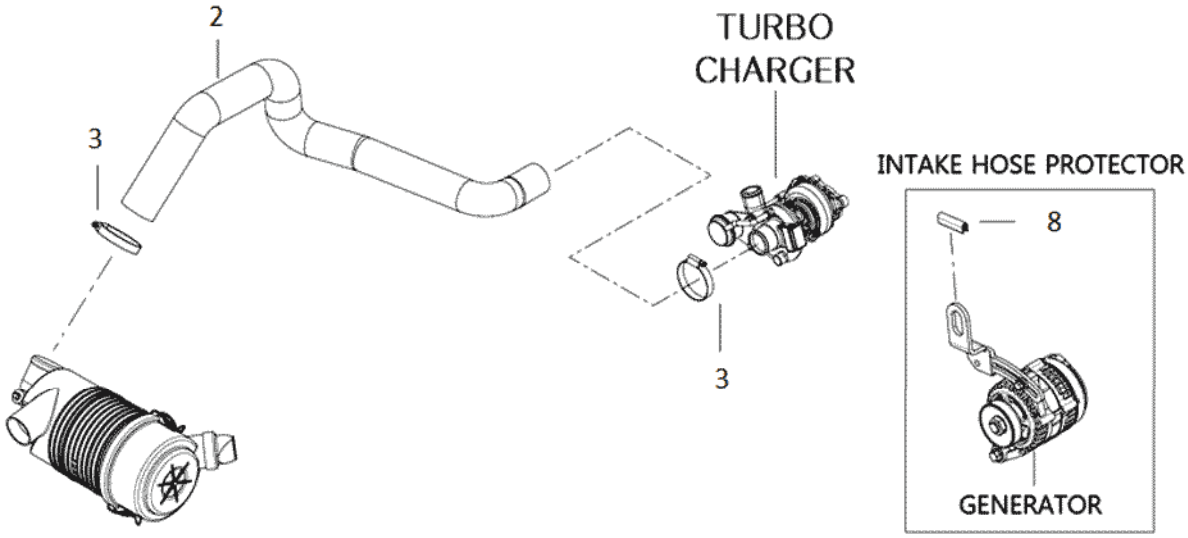

FIG C161.2A-1 3015H	ENGINE SUB-2	Year/Month 2020/01

KeyNo.	Part Number	Part Name	Quantity	Other
1	TA00039423B	HOSE	1	
3	23000-070000	CLAMP,HOSE	2	
4	TCE7410000A3	BRACKET	1	
5	26106-080162	SCREW,HEXFLANGEHEADCAP	1	
6	26106-080202	SQR FLANGE BOLT	1	
7	TA00042938A	AIR CLEANER ASSY	1	

FIG C161.2A-2 3015H	ENGINE SUB - 2 (2016.06)	Year/Month 2020/01

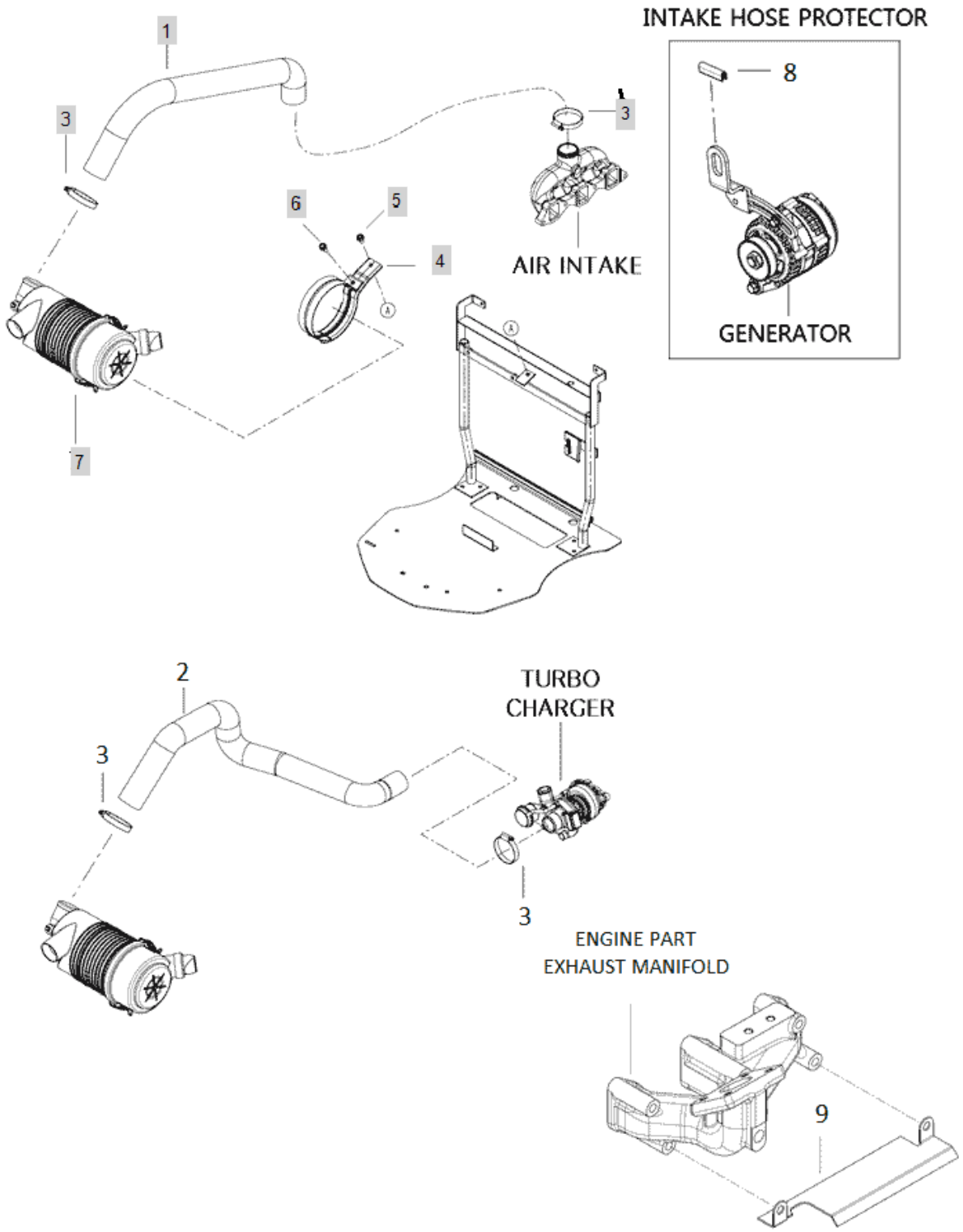

FIG C161.2A-2 3015H	ENGINE SUB - 2 (2016.06)	Year/Month 2020/01

KeyNo.	Part Number	Part Name	Quantity	Other
1	TA00039423B	HOSE	1	
3	23000-070000	CLAMP,HOSE	2	
4	TCE7410000A3	BRACKET	1	
5	26106-080162	SCREW,HEXFLANGEHEADCAP	1	
6	26106-080202	SQR FLANGE BOLT	1	
7	TA00042938A	AIR CLEANER ASSY	1	
9	TA00045005A	COVER	1	

FIG C161.2A-3 3015H	ENGINE SUB- 2 (2016.06)	Year/Month 2020/01

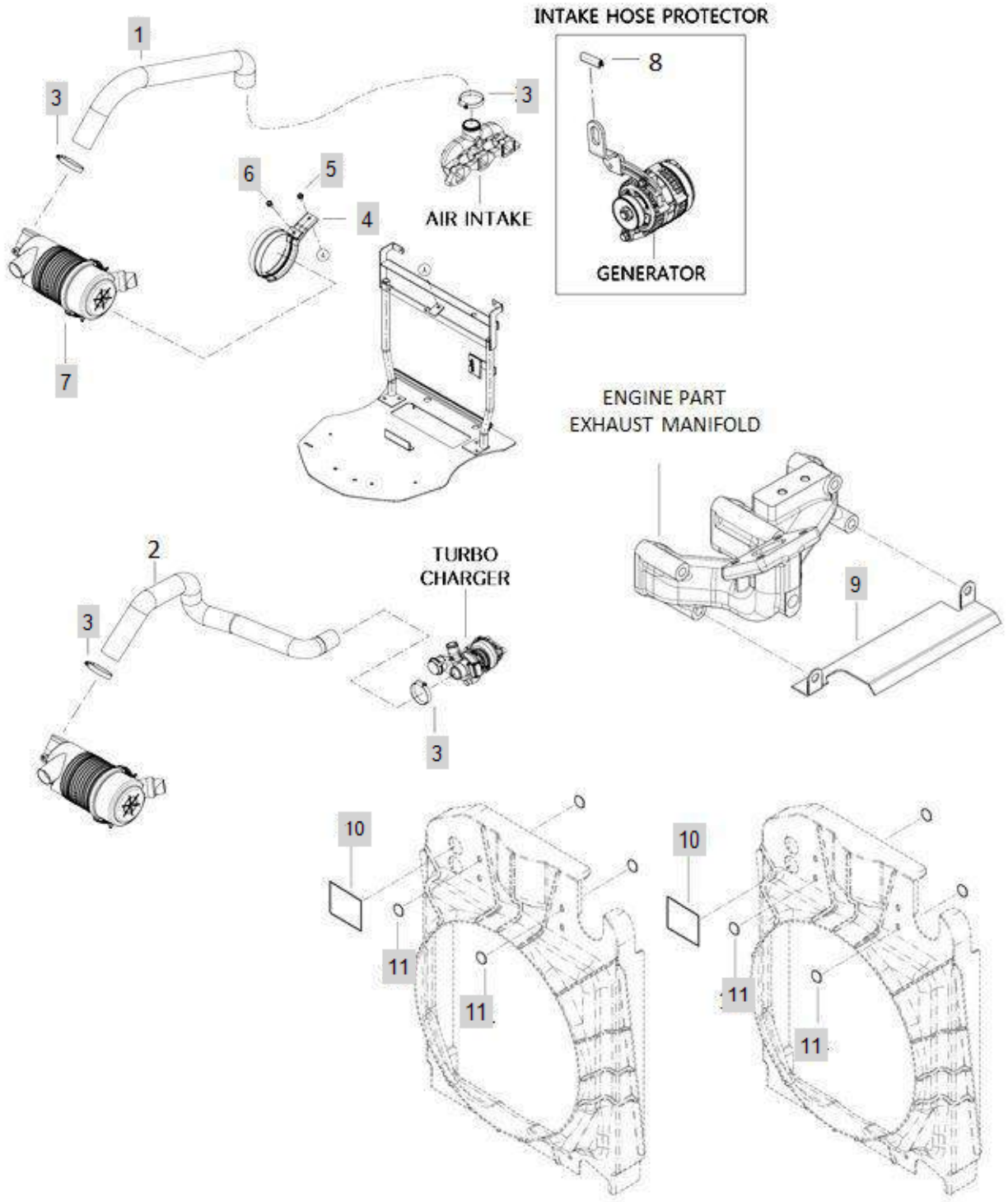

FIG C161.2A-3 3015H	ENGINE SUB- 2 (2016.06)	Year/Month 2020/01

KeyNo.	Part Number	Part Name	Quantity	Other
1	TA00039423B	HOSE	1	
3	23000-070000	CLAMP,HOSE	2	
4	TCE7410000A3	BRACKET	1	
5	26106-080162	SCREW,HEXFLANGEHEADCAP	1	
6	26106-080202	SQR FLANGE BOLT	1	
7	TA00042938A	AIR CLEANER ASSY	1	
9	TA00045005A	COVER	1	
10	TA00054115B	STICKER 2	2	
11	TA00054028B	STICKER	4	

FIG C191 3015H	RELIEF VALVE	Year/Month 2020/01

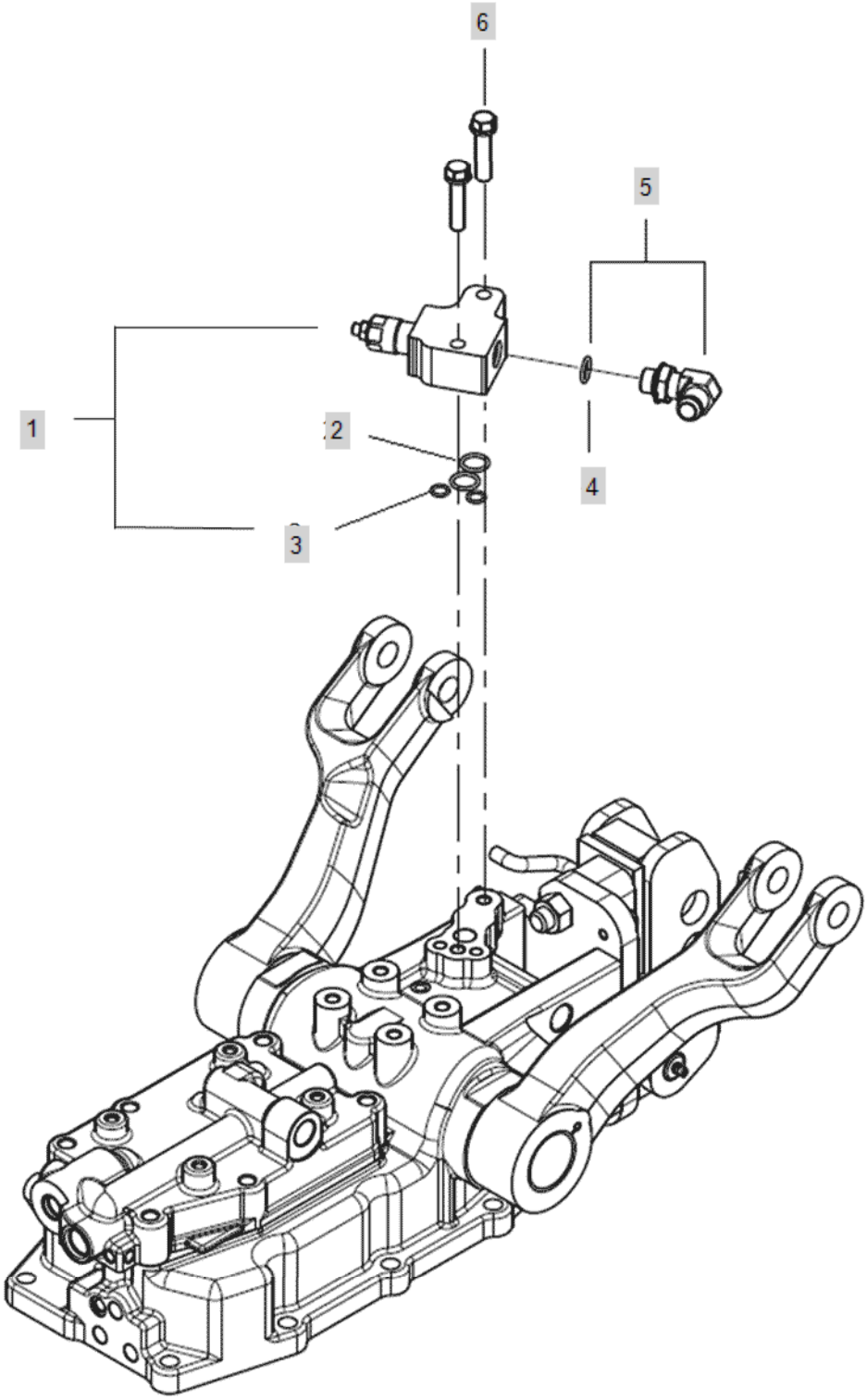

FIG C191 3015H	RELIEF VALVE	Year/Month 2020/01

KeyNo.	Part Number	Part Name	Quantity	Other
1	TA00033977A	COVER RELIEF	1	
2	24311-000160	O-RING, DYNAMIC (Φ16)	2	
3	24311-000100	O-RING, DYNAMIC (Φ10)	2	
4	24311-000140	O-RING, DYNAMIC (Φ14)	1	
5	TA00035078A	ELBOW	1	
6	26013-100452	HEX BOLT W/WASHER	2	

FIG C192-1 3015H	SUN VISOR	Year/Month 2020/01

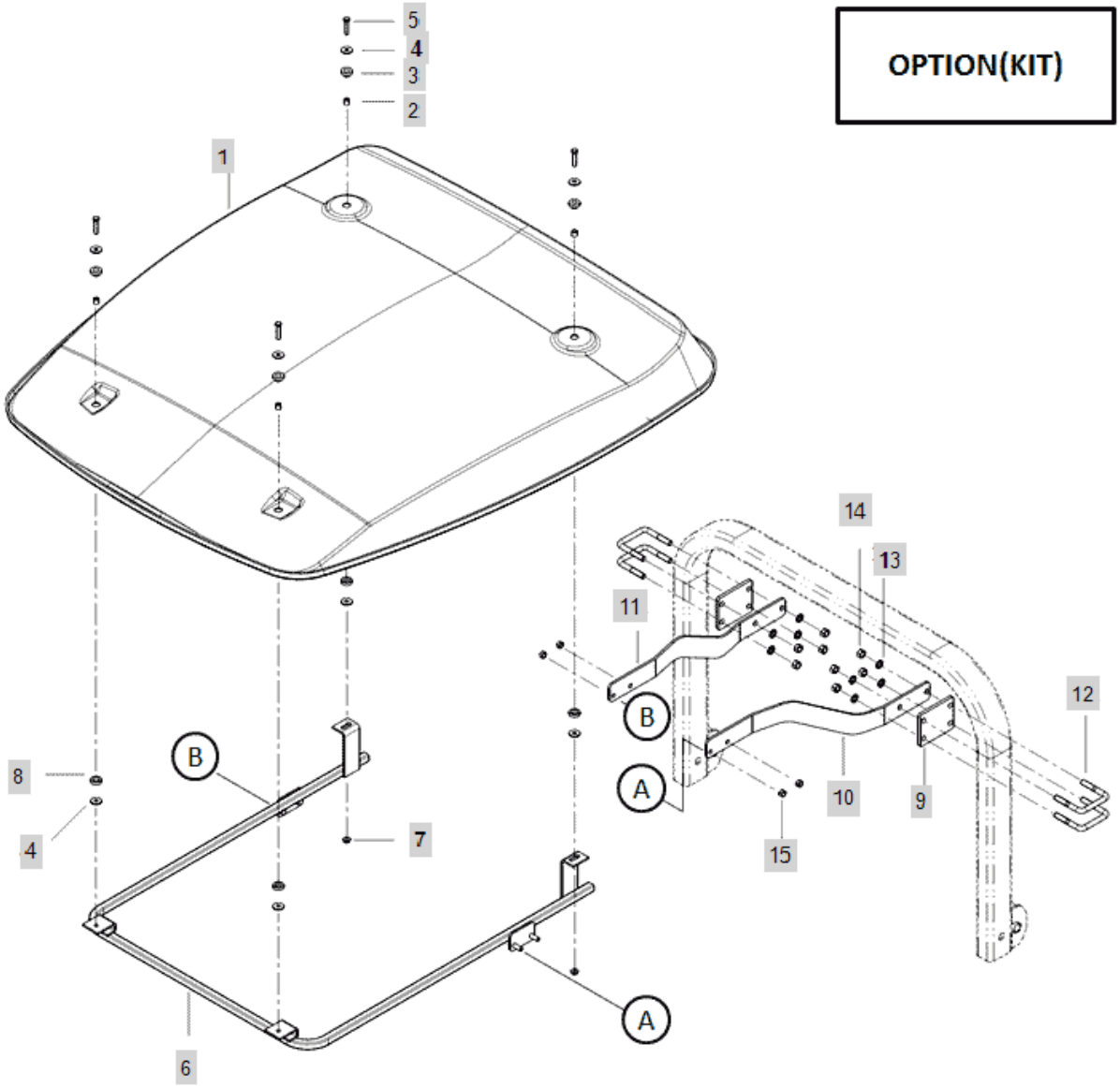

FIG C192-1 3015H	SUN VISOR	Year/Month 2020/01

KeyNo.	Part Number	Part Name	Quantity	Other
1	TCJ6040000B0	ROOF ASSY	1	
2	TTF8390000A4	COLLAR	4	
3	TT29160000A4	RUBBERB	4	
4	22157-080000	WASHER, PLAIN (Φ 08)	8	
5	26117-080402	BOLT	4	
6	TA00043724A	SUNVISOR FRAME ASSY	1	
7	26367-080002	HEX FLANGE NUT (Φ8)	2	
8	TT29150000A4	RUBBERA	8	
9	TA00043731A	PLATE	2	
10	TA00043728A	SUPPORT BRACKET L	1	
11	TA00043729A	SUPPORT BRACKET R	1	
12	TA00043730A	U BOLT	4	
13	22217-120000	WASHER, SPRING (Φ 12)	8	
14	26716-120002	BOLT,CYLINDER HEAD(B)	8	
15	26716-100002	Nut, Hexa (Φ10)	4	

FIG C192-2 3015H	SUN VISOR(2017.12)	Year/Month 2020/01

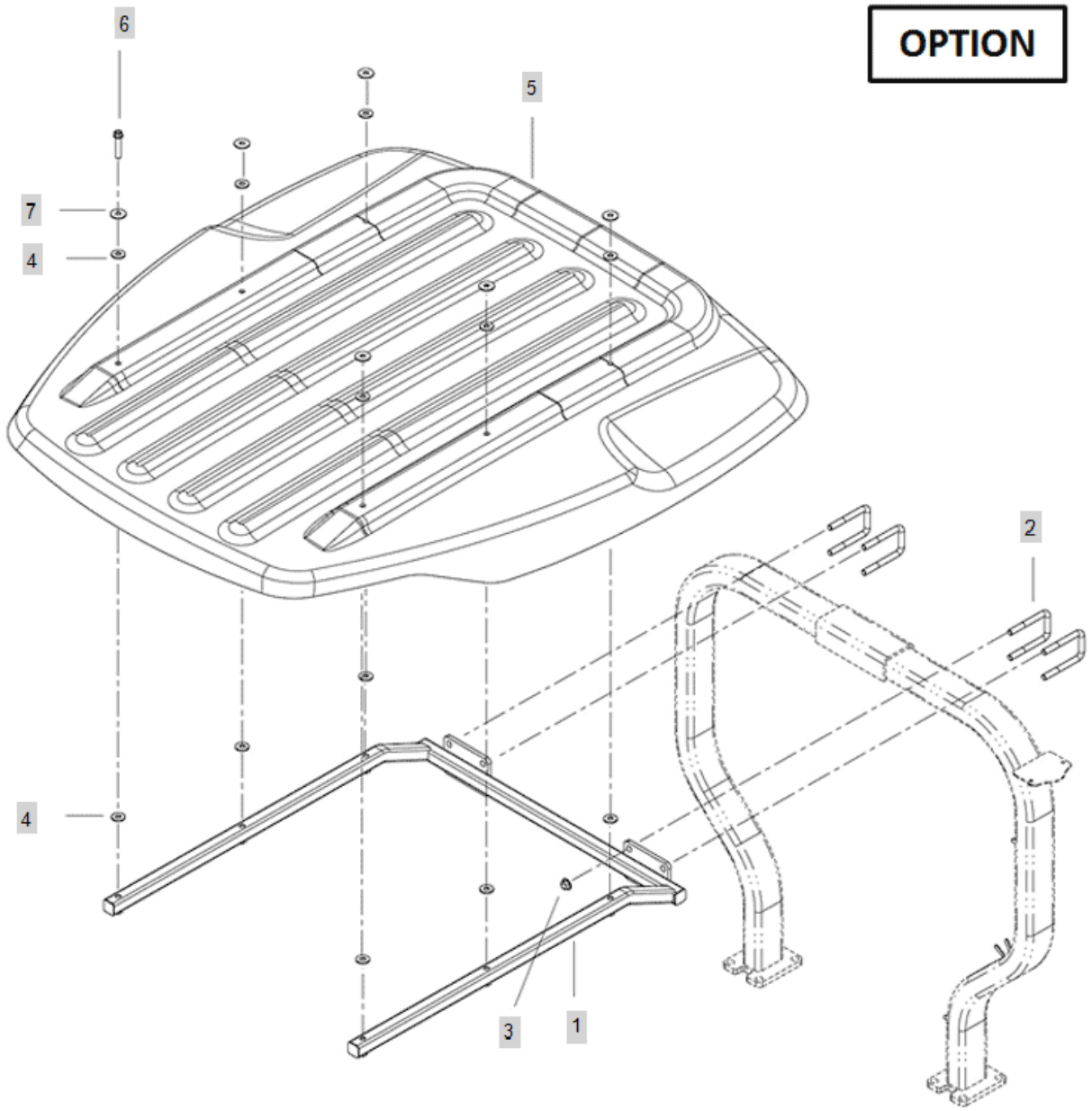

FIG C192-2 3015H	SUN VISOR(2017.12)	Year/Month 2020/01

KeyNo.	Part Number	Part Name	Quantity	Other
1	TA00050247A	CANOPY FRAME ASS`Y	1	
2	TA00050243A	U-BOLT	4	
3	26367-120002	NUT	8	
4	THA4904000A9	PACKING 1	12	
5	TA00050087B	CANOPY	6	
6	26106-100552	BOLT	6	
7	22157-100000	WASHER, PLAIN (Φ 10)	6	