KUKJE 4015R Branson Tractor

Parts Catalogue

BRANSON TRACTOR

CONTENTS

GROUP NO	GROUP NAME	PAGE
C000	15R_SERIES	5
C001	1. LEVER ACCELERATOR	7
C002	2. STEERING COLUMN	9
C003A-1	3. FRONT AXLE BRACKET	11
C003A-2	3. FRONT AXLE BRACKET(2018.04)	13
C003A-3	3. FRONT AXLE BRACKET(2018.04)	15
C009-1	9. CENTAPIN SUPPORTER	17
C009-2	9. CENTAPIN SUPPORTER(2018.02)	19
C010	10. TIEROAD	21
C012	12. RING GEAR, DRIVEN GEAR	23
C019-1	19. GEAR CASE, FRONT AXLE	25
C019-2	19. GEAR CASE, FRONT AXLE(2018.01)	27
C019-2	19. GEAR CASE, FRONT AXLE(2018.01)	29
C020	20. SPACER	31
C032	32. P.S.T CYLINDER	33
C034	34. P.S.T HOSE	35
C037A-1	37. CLUTCH HOUSING(2017.10)	37
C037A-2	37. CLUTCH HOUSING(2018.01)	39
C037A-3	37. CLUTCH HOUSING(2019.04)	41
C038A	38. SHAFT, F/R DRV	43
C039	39. CLUTCH RELEASE	45
C042A	42. GEAR, MAIN SHIFT	47
C043-1	43. SHUTTLE ASS'Y	49
C043-2	43. SHUTTLE ASS'Y	51
C044-1	44. TRANSMISSION CASE	53
C044-2	44. TRANSMISSION CASE(2018.02)	55
C044-3	44. TRANSMISSION CASE(2019.01)	57
C057A	57. GEAR, RANGE SHIFT	59
C062	62. MAIN P.T.O SHAFT	61
C063-1	63. PTO DRIVE SHAFT	63
C063B-2	63. PTO DRIVE SHAFT (2019.01)	65
C066-1	66. FORK, MAIN SHIFT	67
C066-2	66. FORK, MAIN SHIFT	69
C066-3	66. FORK, MAIN SHIFT	71
C068	68. LEVER ASS'Y, RANGE SHIFT	73

GROUP NO	GROUP NAME	PAGE
C072A	72. FORNT DRIVE SHAFT	75
C073	73. 4WD LEVER	77
C074-1	74. FORK & LEVER, PTO	79
C074B-2	74. FORK & LEVER, PTO(2019.01)	81
C078	78. RING GEAR&DIFF.GEAR ASS'Y	83
C079-1	79. DIFFERENTIAL	85
C079-2	79. DIFFERENTIAL	87
C082	82. DRIVING PART, REAR AXLE	89
C083	83. BRAKE	91
C090	90. BRAKE PEDAL	93
C091	91. PARKING BRAKE	95
C092A	92. HYD PUMP	97
C101-1	101. CASE, HYD CYLINDER	99
C101-2	101. CASE, HYD CYLINDER(2020.01~)	101
C104-1	104. PISTON ASS'Y	103
C104-2	104. PISTON ASS'Y(2020.01~)	105
C108	108. SAFETY VALVE	107
C109	109. STOP VALVE	109
C111.1	111-1. HYD CONTROL POSITION TYPE	111
C111.2	111-2. HYD CONTROL POSITION TYPE	113
C113	113. DRAFT CONTROL	115
C114A	114. HYD PIPING	117
C114D-2	114. HYD PIPING (2019.04~)	119
C118	118. HYD FILTER	121
C119B	119. ELE'C WIRING	123
C124B	124. BATTERY	125
C125	125. SWITCH	127
C135.1-1	135-1. BONNET	129
C135.1-2	135-1. BONNET(2018.08~)	131
C135.1-3	135-1. BONNET(2019.04~)	133
C135.2	135-2. BONNET	135
C136-1	136. LOCKING ASS'Y, BONNET	137
C136-2	136. LOCKING ASS'Y, BONNET	139
C137-1	137. BONNET SUPPORT	141
C137A-2	137. BONNET SUPPORT(2018.02)	143

GROUP NO	GROUP NAME	PAGE
C137B	137. BONNET SUPPORT	145
C138	138. FENDER	147
C139	139. FOOT REST ASS'Y	149
C140	140. SEAT	151
C141A-1	141. FUEL TANK	153
C141A-2	141. FUEL TANK	155
C144D	144. NAME PLATE	157
C146-1	146. TOP LINK, LIFT LINK	159
C146-2	146. TOP LINK, LIFT LINK	161
C150	150. LOWER LINK	163
C152	152. DRAWBAR HITCH	165
C158-1	158. ROPS FRAME ASS'Y	167
C158A-2	158. ROPS FRAME ASS'Y (2018.02)	169
C161.1B	161-1. ENGINE SUB	171
C161.2C-1	161-2. ENGINE SUB (2018.01)	173
C161.2C-2	161-2. ENGINE SUB(2018.02~)	175
C191	191. RELIEF VALVE	177
C192-1	192. SUN VISOR	179
C192-2	192. SUN VISOR	181

FIG C000 4015R	15R_SERIES	Year/Month 2020/01

CHASSIS

ENGINE

FIG C000 4015R	15R_SERIES	Year/Month 2020/01

KeyNo.	Part Number	Part Name	Quantity	Other

FIG C001 4015R	1. LEVER ACCELERATOR	Year/Month 2020/01

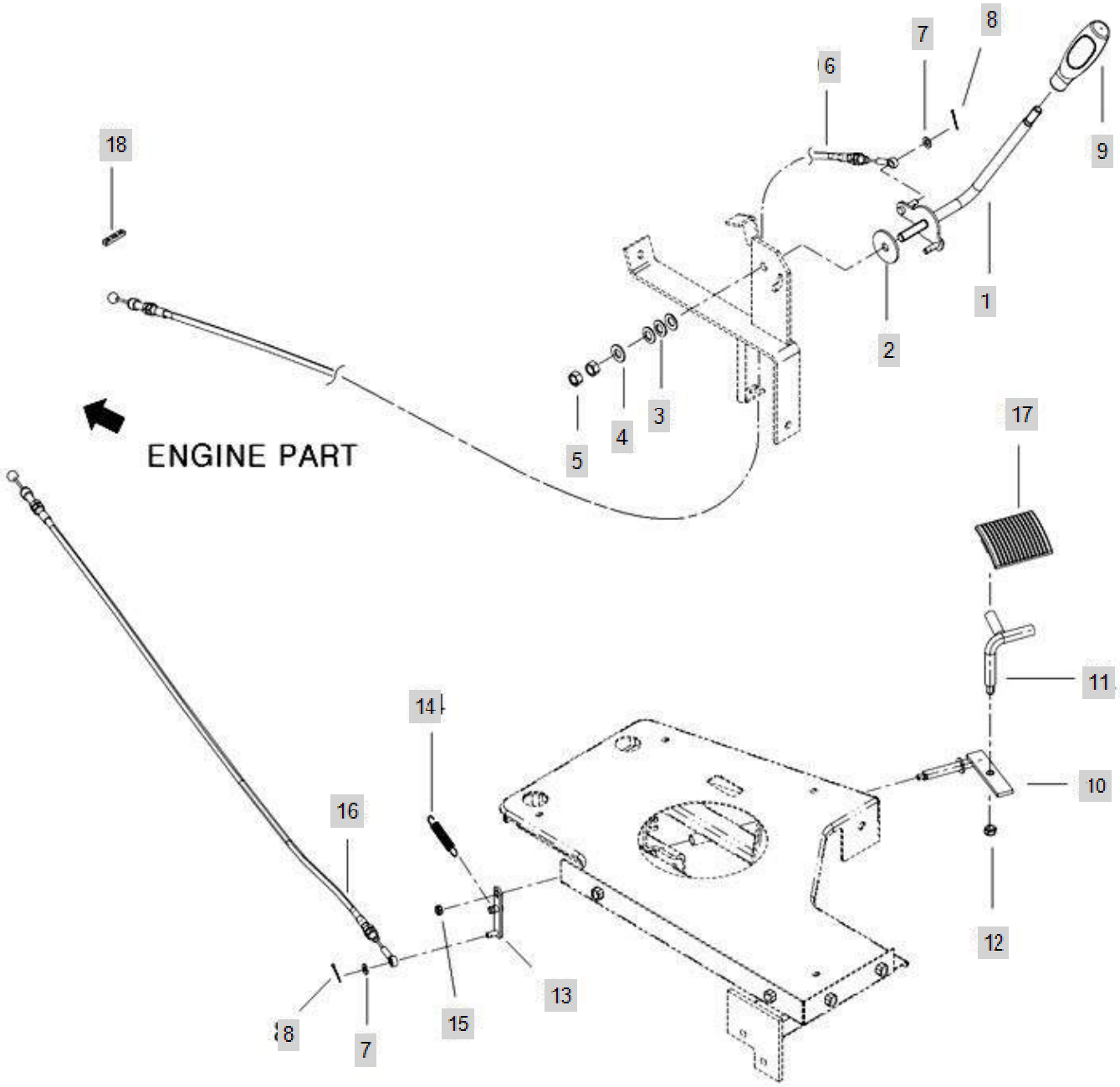

FIG C001 4015R	1. LEVER ACCELERATOR	Year/Month 2020/01

KeyNo.	Part Number	Part Name	Quantity	Other
1	TA00040924B	ACCEL LEVER	1	
2	TC45060000A4	FRICTIONPLATE	1	
3	TC45010000A4	SPRINGWASHER10	3	
4	22137-100000	WASHER, PLAIN (Φ 10)	1	
5	26716-100002	Nut, Hexa (Φ10)	2	
6	TC45410000B	WIRE ASS'Y, ACCELERATOR(CABIN)	1	
7	22137-060000	WASHER , PLAIN	1	
8	22417-160180	PIN , COTTER (1-18)	1	
9	TA00044439A	KNOB	1	
10	TA00039481C	PEDAL, ACCELERATOR	1	
11	TA00041457A	PEDAL UPPER ASSY	1	
12	26347-080002	Unut	1	
13	TA00041550A	ARM	1	
14	TT98200000A4	RETURNSPRING	1	
15	26347-060002	NUT6	1	
16	TA00046862B	WIRE	1	
17	TA00039370A	PEDAL ACCELERATION	1	
18	TC45040000A4	RUBBER	1	

FIG C002 4015R	2. STEERING COLUMN	Year/Month 2020/01

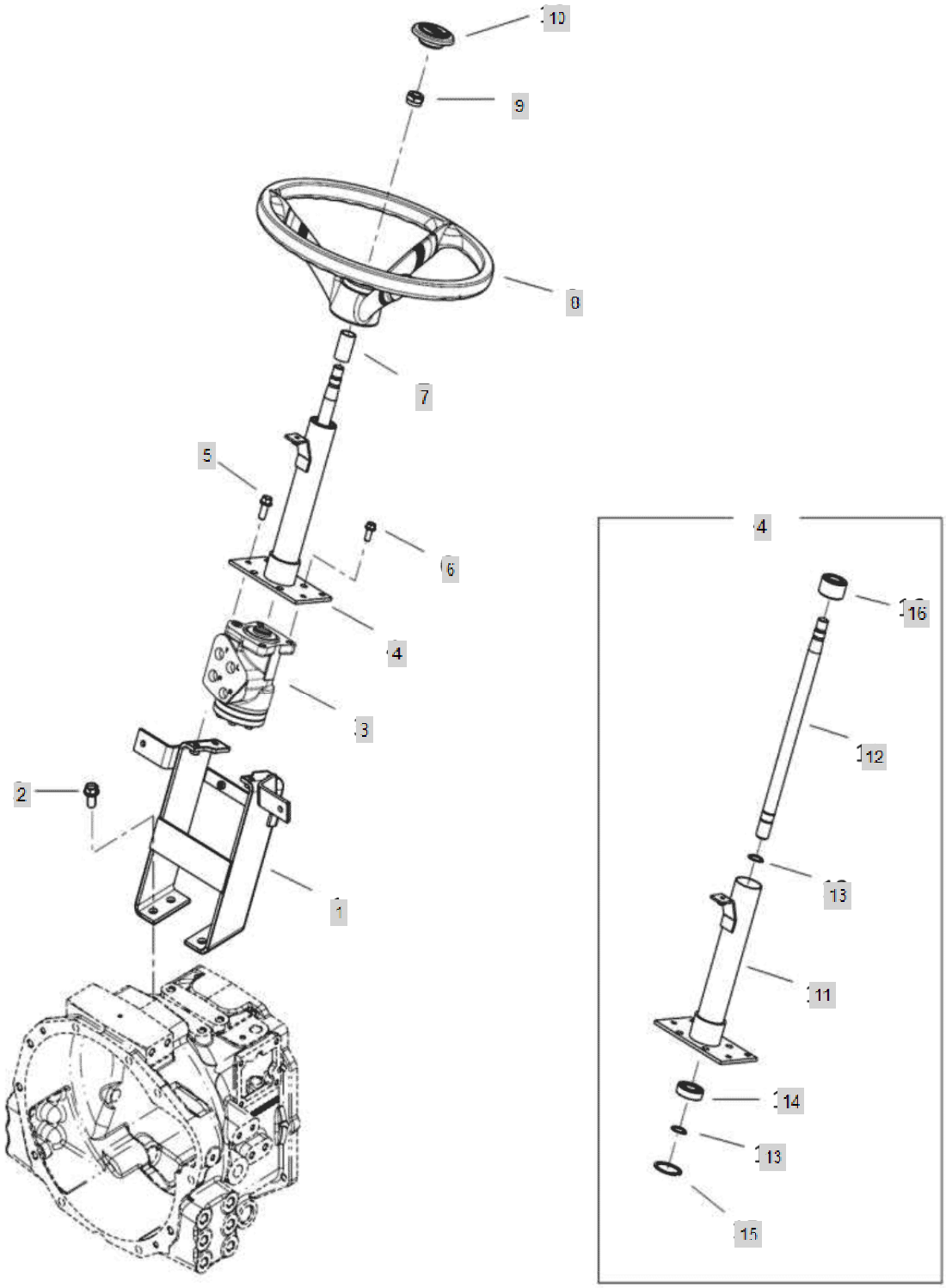

FIG C002 4015R	2. STEERING COLUMN	Year/Month 2020/01

KeyNo.	Part Number	Part Name	Quantity	Other
1	TA00039159G	SUPPROT, STEERING	1	
2	26106-120252	HEX FLANGE BOLT	4	
3	TA00041589A	P.S.T VALVE	1	
4	TA00040881D	COLUMN ASSY	1	
5	26136-100252	SCREW, HEX FLANGE HEAD CAP	3	
6	26106-080202	SQR FLANGE BOLT	4	
7	TA00041364A	COVER	1	
8	TZ29030000A1	STEERING WHEEL	1	
9	TA00048436A	U-NUT	1	
10	TA00055307A	CAP	1	
10-1	TA00026432A	STEERING WHEEL CAP (BRANSON)	1	DELETE
11	TA00040226C	COLUMN PIPE ASSY	1	
12	TA00040545B	STEERING SHAFT	1	
13	22242-000200	SNAP RING, SHAFT (Φ 20)	2	
14	24107-060044	Bearing, Ball (#6004) Dubble Cap	1	
15	22252-000420	RING, CIRCLIP (Φ 42)	1	
16	TC65020400A9	COLUMNBUSH	1	

FIG C003A-1 4015R	3. FRONT AXLE BRACKET	Year/Month 2020/01

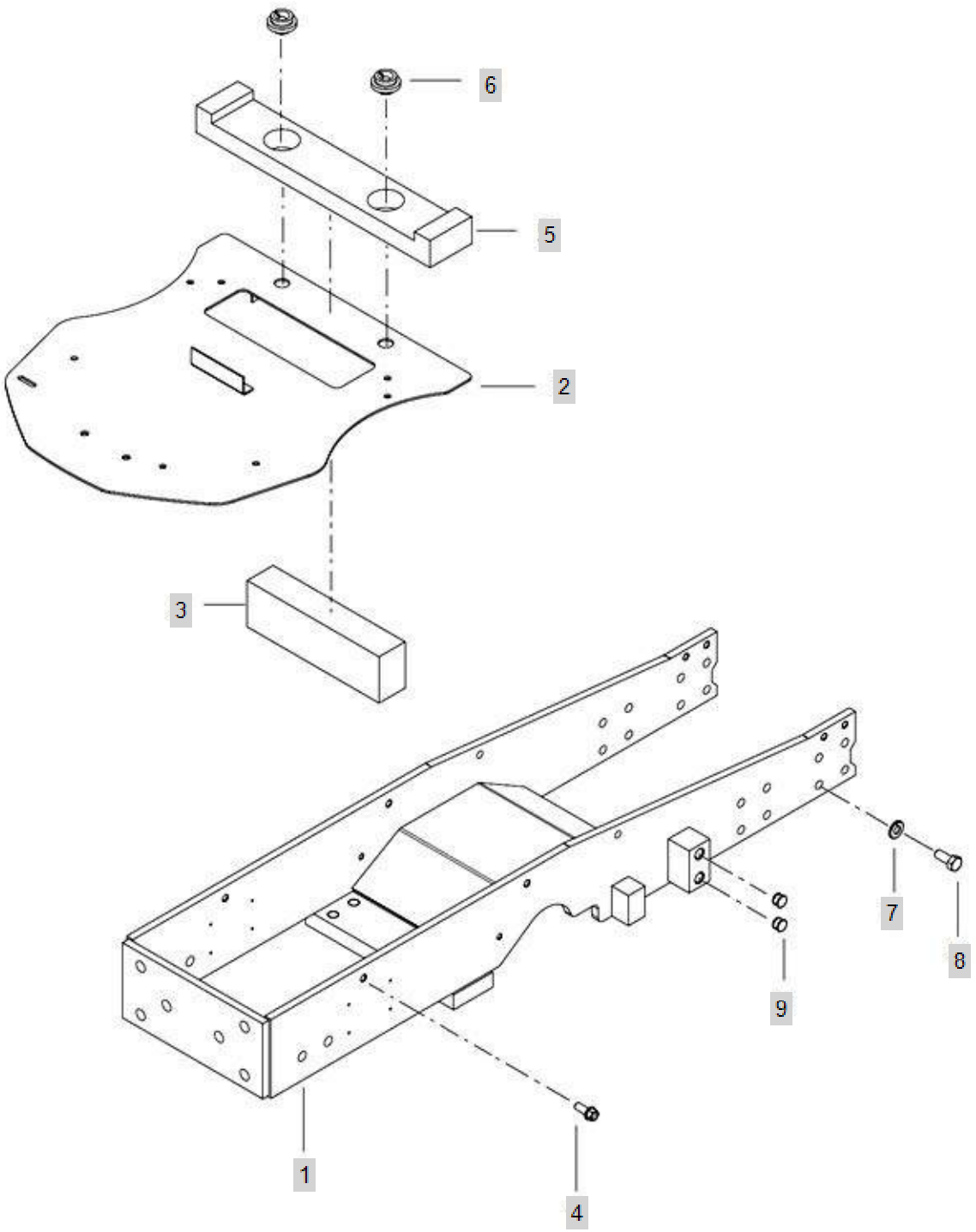

FIG C003A-1 4015R	3. FRONT AXLE BRACKET	Year/Month 2020/01

KeyNo.	Part Number	Part Name	Quantity	Other
1	TA00039090G	FRONT BRACKET ASS'Y	1	
2	TA00039416E	PLATE ASS'Y	1	
3	TA00040607C	URETHANE	1	
4	26106-100202	HEX BOLT, (10-20)	4	
5	TA00040608B	URETHANE	1	
6	HRA1203300A4	RUBEER, VIBRATION PROOF	2	
7	TT08220000A4	LOCKSPRINGWASHER	16	
8	TC54220000A4	TC54220000A4	16	
9	TTD4300000A4	PLUG15	4	

FIG C003A-2 4015R	3. FRONT AXLE BRACKET(2018.04)	Year/Month 2020/01

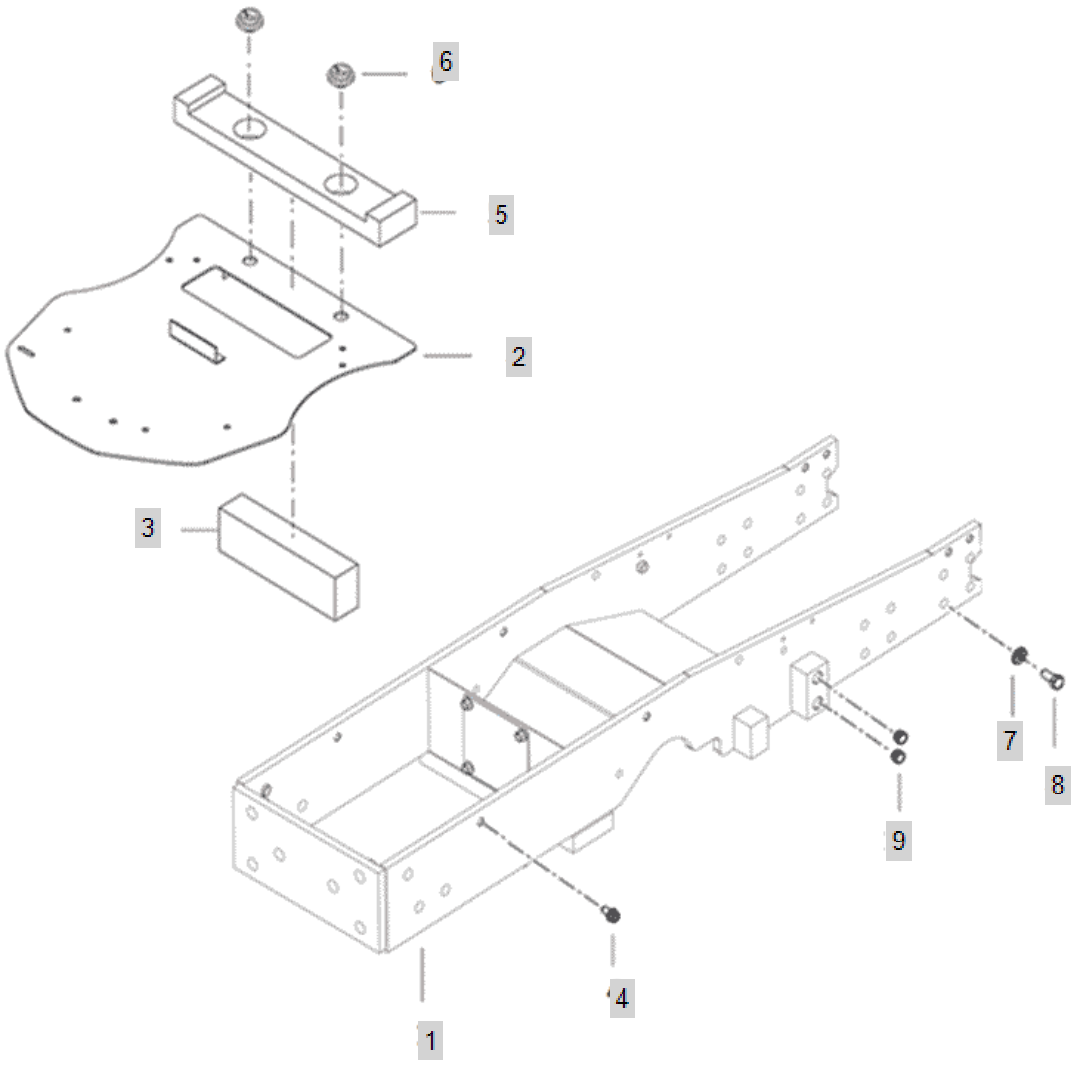

FIG C003A-2 4015R	3. FRONT AXLE BRACKET(2018.04)	Year/Month 2020/01

KeyNo.	Part Number	Part Name	Quantity	Other
1	TA00048469E	FRONT AXLE BRACKET	1	
2	TA00039416E	PLATE ASS'Y	1	
3	TA00040607C	URETHANE	1	
4	26106-100202	HEX BOLT, (10-20)	4	
5	TA00040608B	URETHANE	1	
6	HRA1203300A4	RUBEER, VIBRATION PROOF	2	
7	TT08220000A4	LOCKSPRINGWASHER	16	
8	TC54220000A4	TC54220000A4	16	
9	TA00055258A	PLUG(14)	4	

FIG C003A-3 4015R	3. FRONT AXLE BRACKET(2018.04)	Year/Month 2020/01

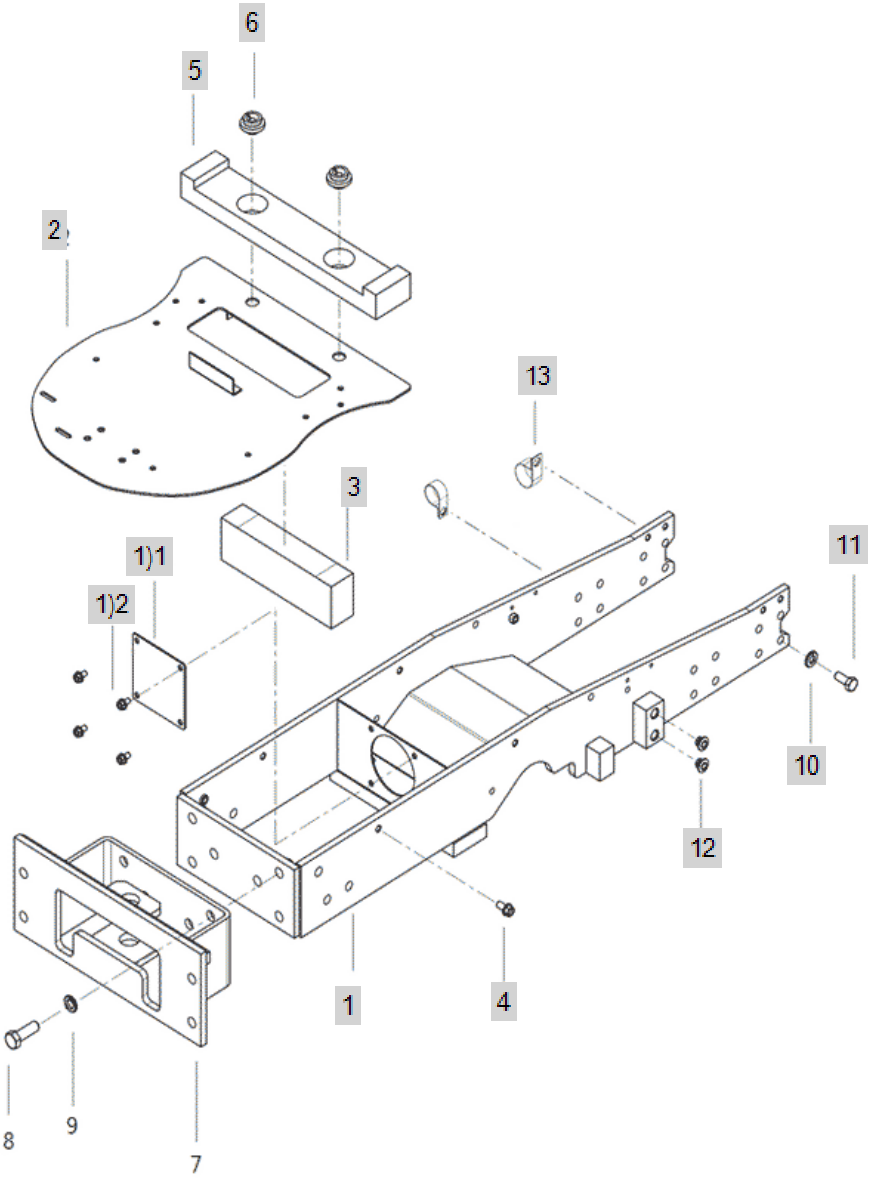

FIG C003A-3 4015R	3. FRONT AXLE BRACKET(2018.04)	Year/Month 2020/01

KeyNo.	Part Number	Part Name	Quantity	Other
1	TA00048469F	FRONT AXLE BRACKET	1	
1)1	TA00057575A	COVER	1	
1)2	26106-080142	SCREW,HEXFLANGEHEADCAP	4	
2	TA00039416E	PLATE ASS'Y	1	
3	TA00040607C	URETHANE	1	
4	26106-100202	HEX BOLT, (10-20)	4	
5	TA00040608B	URETHANE	1	
6	HRA1203300A4	RUBEER, VIBRATION PROOF	2	
10	22217-120000	WASHER, SPRING (Φ 12)	16	
10-1	TT08220000A4	LOCKSPRINGWASHER	16	DELETE
11	TC54220000A4	TC54220000A4	16	
12	TA00055258A	PLUG(14)	4	
13	TA00003081A	CLIP	2	

FIG C009-1 4015R	9. CENTAPIN SUPPORTER	Year/Month 2020/01

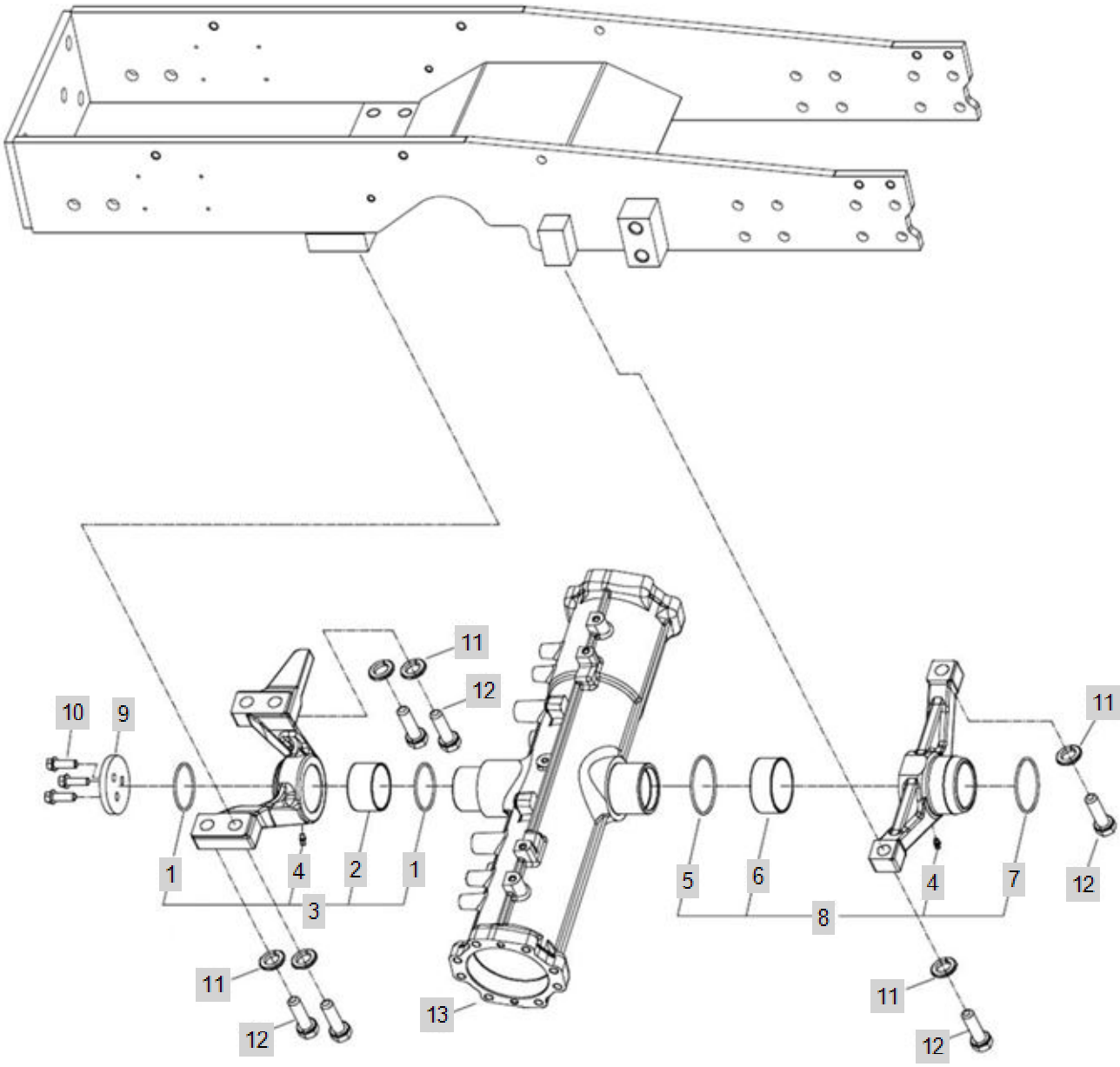

FIG C009-1 4015R	9. CENTAPIN SUPPORTER	Year/Month 2020/01

KeyNo.	Part Number	Part Name	Quantity	Other
1	24321-000600	SEAL,ORING	2	
2	TA00034105A	BUSH	1	
3	TA00034104A	AXLE SUPPORT(FRONT) ASS'Y	1	
4	24764-060000	GREASE NIPPLE	1	
5	24321-000750	SEAL,ORING	1	
6	TA00034103A	BUSH	1	
7	24321-000700	O-RING1AG-70	1	
8	TA00034102C	AXLE SUPPORT (REAR)	1	
9	TC55020000A4		1	
10	26106-100302	HEXFLANGEBOLT	3	
11	22217-160000	WASHER, SPRING (Φ 16)	6	
12	26116-160602	HEX BOLT	6	
13	TA00033449A	CASE, FRONT AXLE	1	

FIG C009-2 4015R	9. CENTAPIN SUPPORTER(2018.02)	Year/Month 2020/01

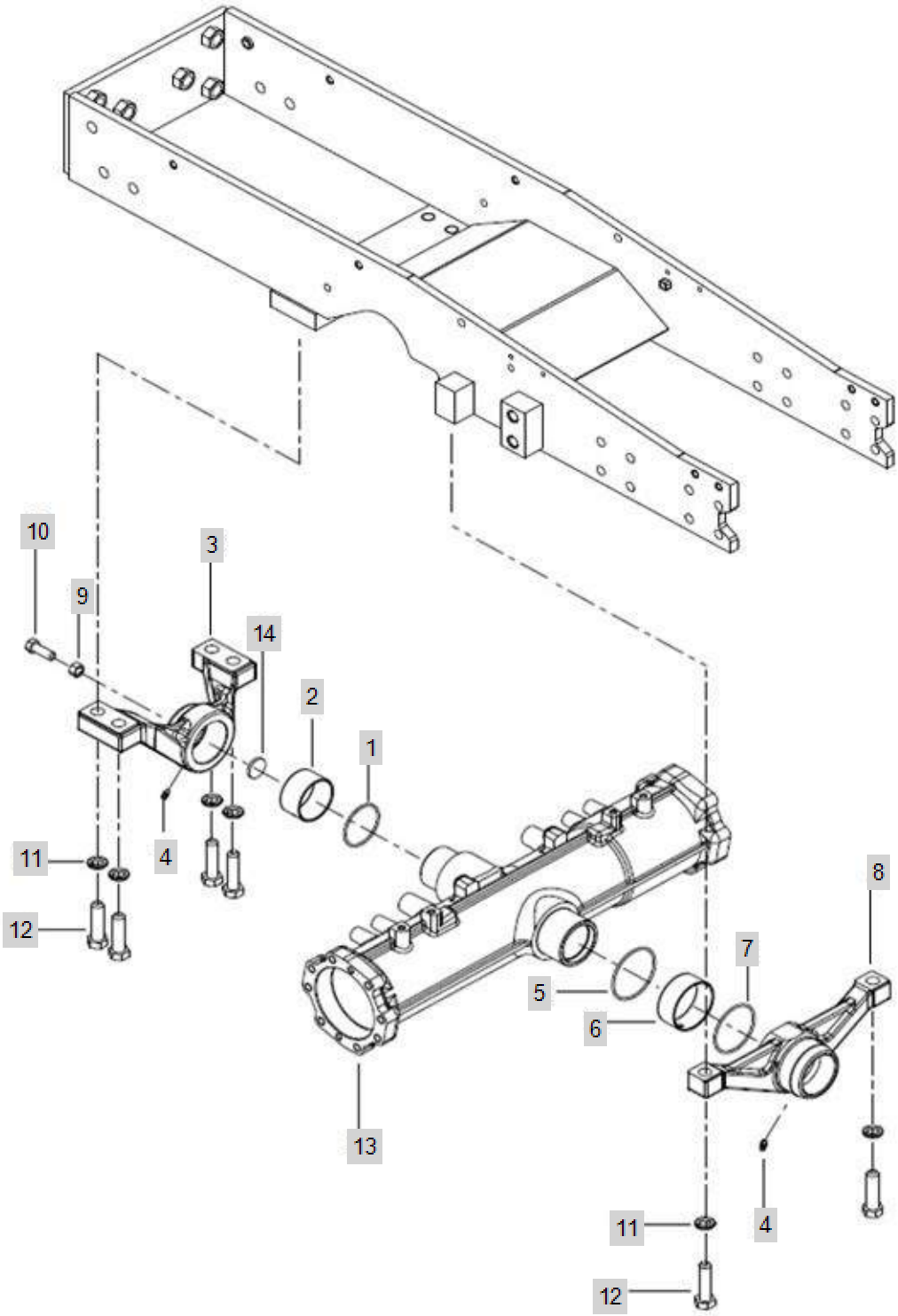

FIG C009-2 4015R	9. CENTAPIN SUPPORTER(2018.02)	Year/Month 2020/01

KeyNo.	Part Number	Part Name	Quantity	Other
1	24321-000600	SEAL,ORING	2	
2	TA00034105A	BUSH	1	
3	TA00048801A	FRONT AXLE SUPPROT ASS'Y	1	
4	24764-060000	GREASE NIPPLE	1	
5	24321-000750	SEAL,ORING	1	
6	TA00034103A	BUSH	1	
7	24321-000700	O-RING1AG-70	1	
8	TA00034102C	AXLE SUPPORT (REAR)	1	
9	26716-120002	BOLT,CYLINDER HEAD(B)	1	
10	26116-120354	BOLT	1	
11	22217-160000	WASHER, SPRING (Φ 16)	6	
12	26116-160602	HEX BOLT	6	
13	TA00048800A	CASE, FRONT AXLE	1	
14	TA00048803A	WASHER	1	

FIG C010 4015R	10. TIEROAD	Year/Month 2020/01

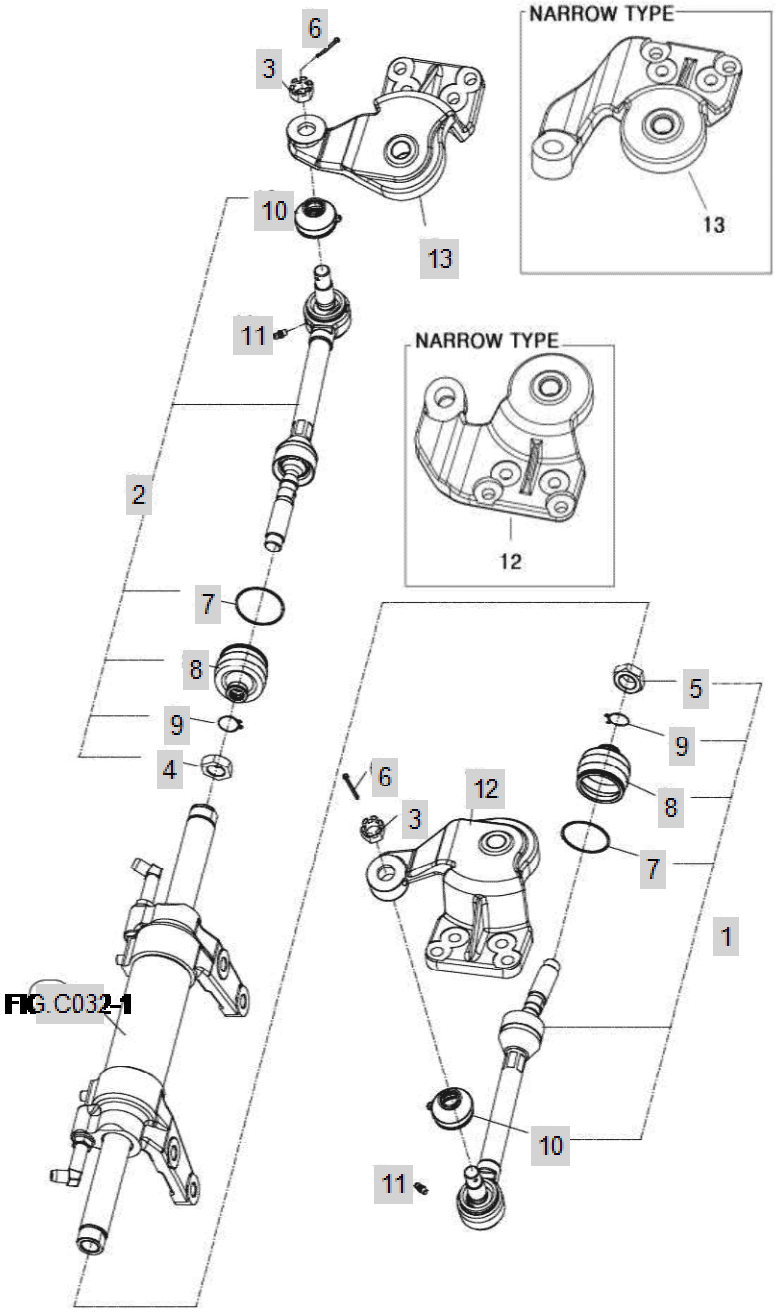

FIG C010 4015R	10. TIEROAD	Year/Month 2020/01

KeyNo.	Part Number	Part Name	Quantity	Other
1	TC56010000D	TIEROD ASS'Y(LH)	1	
2	TC56020000D	TIEROD ASS'Y(RH)	1	
3	26877-160002	STUDNUTM16	2	
4	TC56040000B4	NUT M20*1.5	1	
5	TC56050000B4	nut	1	
6	22417-300250	PIN , COTTER (3-25)	2	
7	TC56010106A4	SET RING	2	
8	TC56010105A4	DUST COVER	2	
9	TC56010107A4	CLIP	2	
10	TT10030000A9	DUSTCOVER	2	
11	24764-060000	GREASE NIPPLE	2	
12	TA00033465E	NUCKLE ARM (LH)	1	
13	TA00033467E	NUCKLE ARM (RH)	1	
FIG.C032-1	C032		1	

FIG C012 4015R	12. RING GEAR, DRIVEN GEAR	Year/Month 2020/01

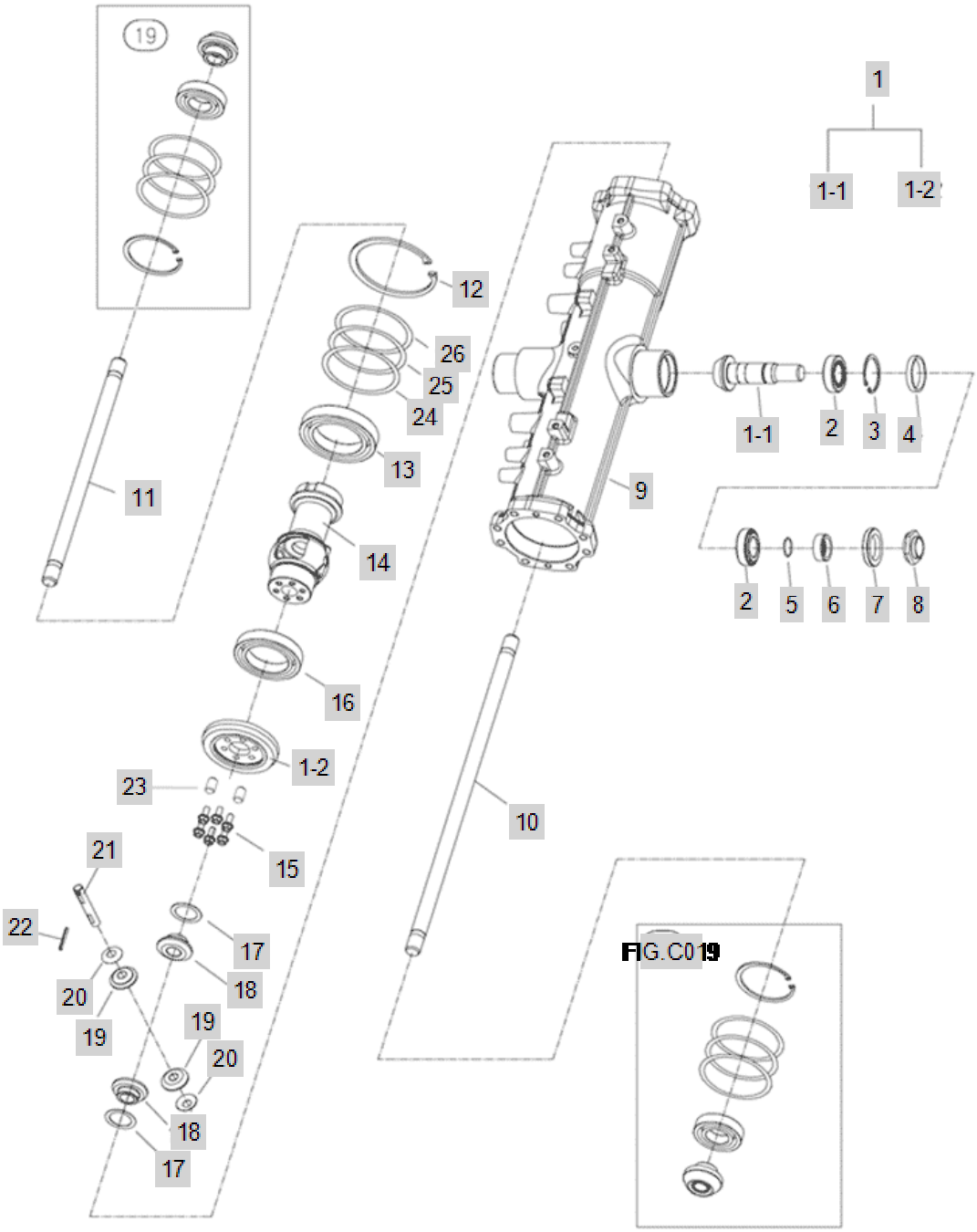

FIG C012 4015R	12. RING GEAR, DRIVEN GEAR	Year/Month 2020/01

KeyNo.	Part Number	Part Name	Quantity	Other
1	TA00033454C	RING GEAR ASSY	1	
1-1	TA00033455B	COUNT SHAFT	1	
1-2	TA00033456C	RING GEAR	1	
2	24141-320060	BEARING, ROLLER (#32-00-60)	2	
3	22252-000550	RING, CIRCLIP (Φ 55)	1	
4	TA00033478A	SPACER	1	
5	24311-000300	O RING(P TYPE)	1	
6	TA00033471A	BUSH	1	
7	24421-405508	OIL SEAL	1	
8	TA00033472A	NUT	1	
9	TA00033449A	CASE, FRONT AXLE	1	
10	TA00033466A	FRONT 1ST AXLE LH	1	
11	TA00033462A	FRONT 1ST SHAFT RH	1	
12	22252-001100	RING, CIRCLIP (Φ110)	2	
13	24101-060144	BALL BEARING (#6014)	1	
14	TA00033451B	DIFF. CASE	1	
15	TA00038928A	BOLT	6	
16	24101-060134	BALL BEARING (#6013)	2	
17	TC57120000A4	LINER, DIFFERENTIAL GEAR	2	
18	TC57090000A4	GEAR, DIFFERENTIAL 14	2	
19	TC57100000A4	DIFFERENCIAL PINION GEAR 10	2	
20	TC57130000A4	LINER, DIFFERENTIAL PINION	2	
21	TC57110000B4	SHAFT, PINION	1	
22	22351-040040	PIN, SPRING (4-04)	1	
23	22312-080140	PIN, DOWEL (8-14)	2	
24	TA00033482A	SHIM 0.5T	1	
25	TA00033483A	SHIM 0.3T	1	
26	TA00033484A	SHIM 0.2T	1	
FIG.C019	C019		2	

FIG C019-1 4015R	19. GEAR CASE, FRONT AXLE	Year/Month 2020/01

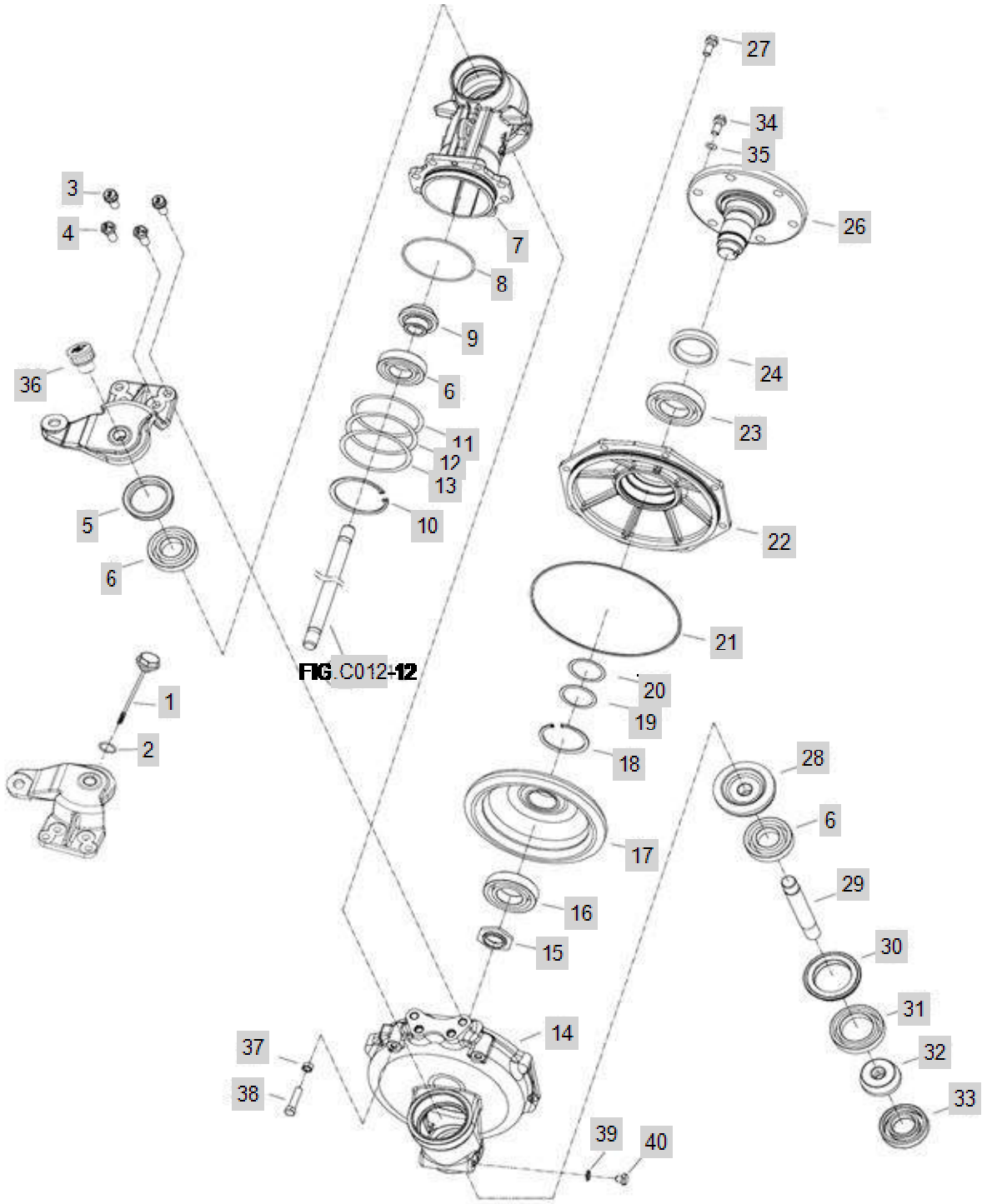

FIG C019-1 4015R	19. GEAR CASE, FRONT AXLE	Year/Month 2020/01

KeyNo.	Part Number	Part Name	Quantity	Other
1	TA00033805A	OIL GUAGE	1	
2	24311-000180	O-RING, DYNAMIC (Φ18)	2	
3	TA00033468B	BOLT W/ WASHER	4	
4	TA00033475A	RIMER BOLT	4	
5	FE78010000B	OIL SEAL (55X72X13.5)	2	
6	24101-062074	BALL BEARING (#6207)	6	
7	TA00033457C	CASE, FRONT GEAR	2	
8	24321-001050	O-RING	2	
9	TA00033461A	PINION, FRONT 1ST SHAFT	2	
10	22252-000720	RING, CIRCLIP (Φ 72)	2	
11	TA00033489A	SHIM 0.2T	2	
12	TA00033488A	SHIM 0.3T	2	
13	TA00033487A	SHIM 0.5T	2	
14	TA00033458B	GEAR BOX, FRONT	2	
15	TA00033481A	LOCK NUT	2	
16	24101-062084	Bearing, Ball (#6208)	2	
17	TA00033474A	GEAR, BEVEL 49T	2	
18	22252-000850	RING, CIRCLIP (Φ 85)	2	
19	TA00033486A	SHIM 0.2T	1	
20	TA00033485A	SHIM 0.5T	1	
21	TA00033939A	O RING	2	
22	TA00033459B	BEARING CASE, FRONT	1	
23	24101-062094	BALL BEARING (#6209)	2	
24	TA00041359A	OILSEAL	2	
24-1	TA00041352A	OILSEAL (AO26 TYPE)	2	
26	TA00033460A	SPINDLE, FRONT	2	
27	TA00033469A	BOLT W/ WASHER	16	
28	TA00033463A	FRONT 2ND AXLE LH	2	
29	TA00033464A	FRONT 2ND SHAFT	2	
30	TC60110000A3	SEAL	2	
31	24101-060104	Bearing, Ball (#6010)	2	
32	TA00033473A	GEAR, BEVEL 11T	2	
33	TC60340000A4	BEARING(TM207C3)	2	
34	TD23120000A4	BOLT	12	
35	TB29430000A4	WASHER	12	
36	TC60790000B	CAP ASS'Y,OIL	1	
37	26716-100001	NUT	1	
38	26116-100452	BOLT	1	
39	22190-100000	WASHER	2	
40	23887-100002	SCREW,HEXAGONHEADCAP	2	
FIG.C012-12	C012		1	

FIG C019-2 4015R	19. GEAR CASE, FRONT AXLE(2018.01)	Year/Month 2020/01

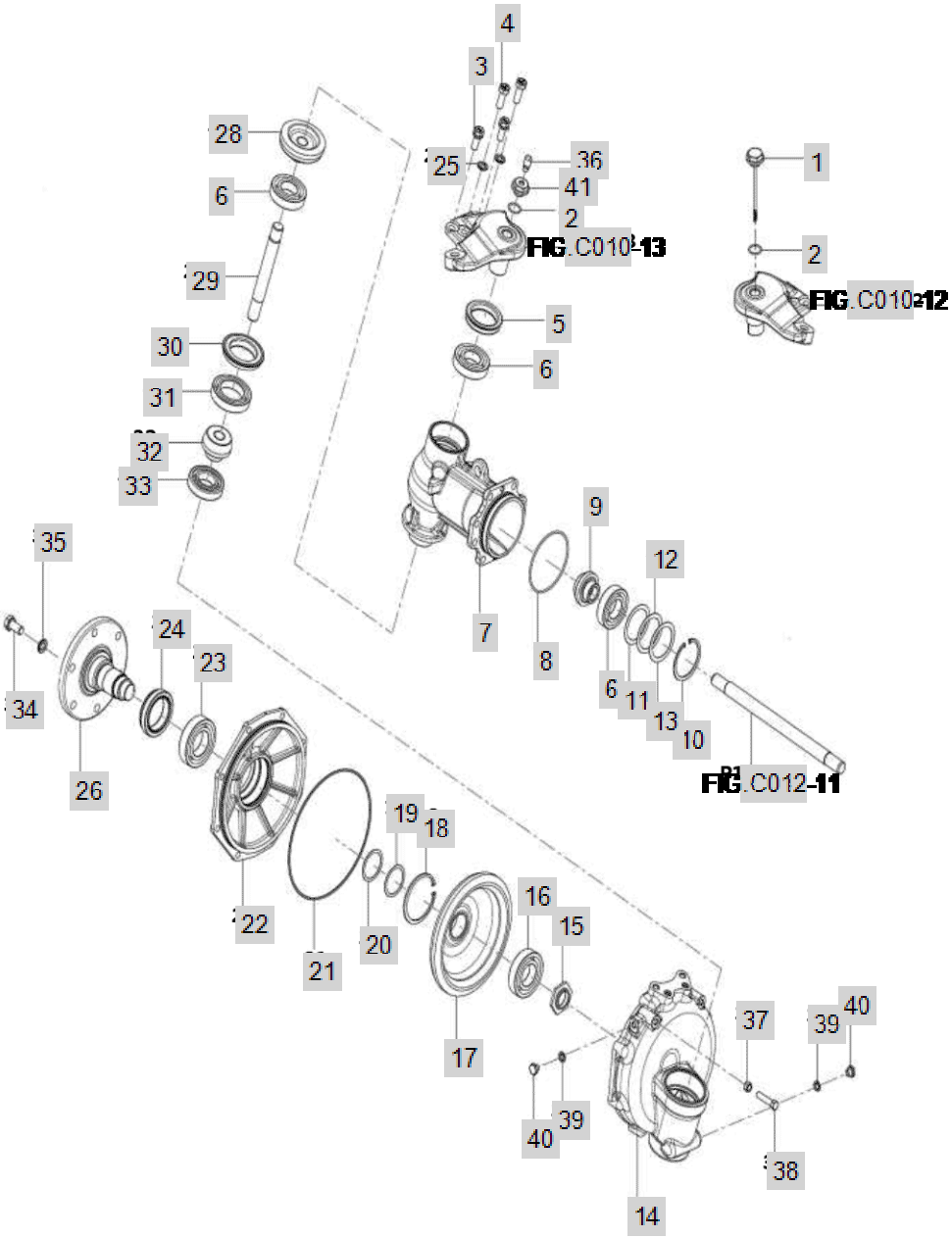

FIG C019-2 4015R	19. GEAR CASE, FRONT AXLE(2018.01)	Year/Month 2020/01

KeyNo.	Part Number	Part Name	Quantity	Other
1	TA00033805A	OIL GUAGE	1	
2	24311-000220	O-RING, DYNAMIC (Φ22)	2	
3	TA00033468B	BOLT W/ WASHER	4	
4	TA00033475A	RIMER BOLT	4	
5	FE78010000B	OIL SEAL (55X72X13.5)	2	
6	24101-062074	BALL BEARING (#6207)	6	
7	TA00033457C	CASE, FRONT GEAR	2	
8	24321-001050	O-RING	2	
9	TA00033461A	PINION, FRONT 1ST SHAFT	2	
10	22252-000720	RING, CIRCLIP (Φ 72)	2	
11	TA00033489A	SHIM 0.2T	2	
12	TA00033488A	SHIM 0.3T	2	
13	TA00033487A	SHIM 0.5T	2	
14	TA00033458B	GEAR BOX, FRONT	2	
15	TA00033481A	LOCK NUT	2	
16	24101-062084	Bearing, Ball (#6208)	2	
17	TA00033474A	GEAR, BEVEL 49T	2	
18	22252-000850	RING, CIRCLIP (Φ 85)	2	
19	TA00033486A	SHIM 0.2T	1	
20	TA00033485A	SHIM 0.5T	1	
21	TA00033939A	O RING	2	
22	TA00033459B	BEARING CASE, FRONT	1	
23	24101-062094	BALL BEARING (#6209)	2	
24	TA00041359A	OILSEAL	2	
24-1	TA00041352A	OILSEAL (AO26 TYPE)	2	
25	22217-120000	WASHER, SPRING (Φ 12)	2	
26	TA00033460A	SPINDLE, FRONT	2	
27	TA00033469A	BOLT W/ WASHER	16	
28	TA00033463A	FRONT 2ND AXLE LH	2	
29	TA00033464A	FRONT 2ND SHAFT	2	
30	TC60110000A3	SEAL	2	
31	24101-060104	Bearing, Ball (#6010)	2	
32	TA00033473A	GEAR, BEVEL 11T	2	
33	TC60340000A4	BEARING(TM207C3)	2	
34	TD23120000A4	BOLT	12	
35	22217-140000	WASHER, SPRING (Φ 14)	12	
36	TA00049842A	AIR BREATHER	1	
37	26716-100001	NUT	2	
38	26112-100452	BOLT	2	
39	22190-100000	WASHER	4	
40	23887-100002	SCREW,HEXAGONHEADCAP	4	
41	TA00049843A	ADAPTHER	1	
FIG.C010-12	C010		1	
FIG.C010-13	C010		1	
FIG.C012-11	C012		1	

FIG C019-2 4015R	19. GEAR CASE, FRONT AXLE(2018.01)	Year/Month 2020/01

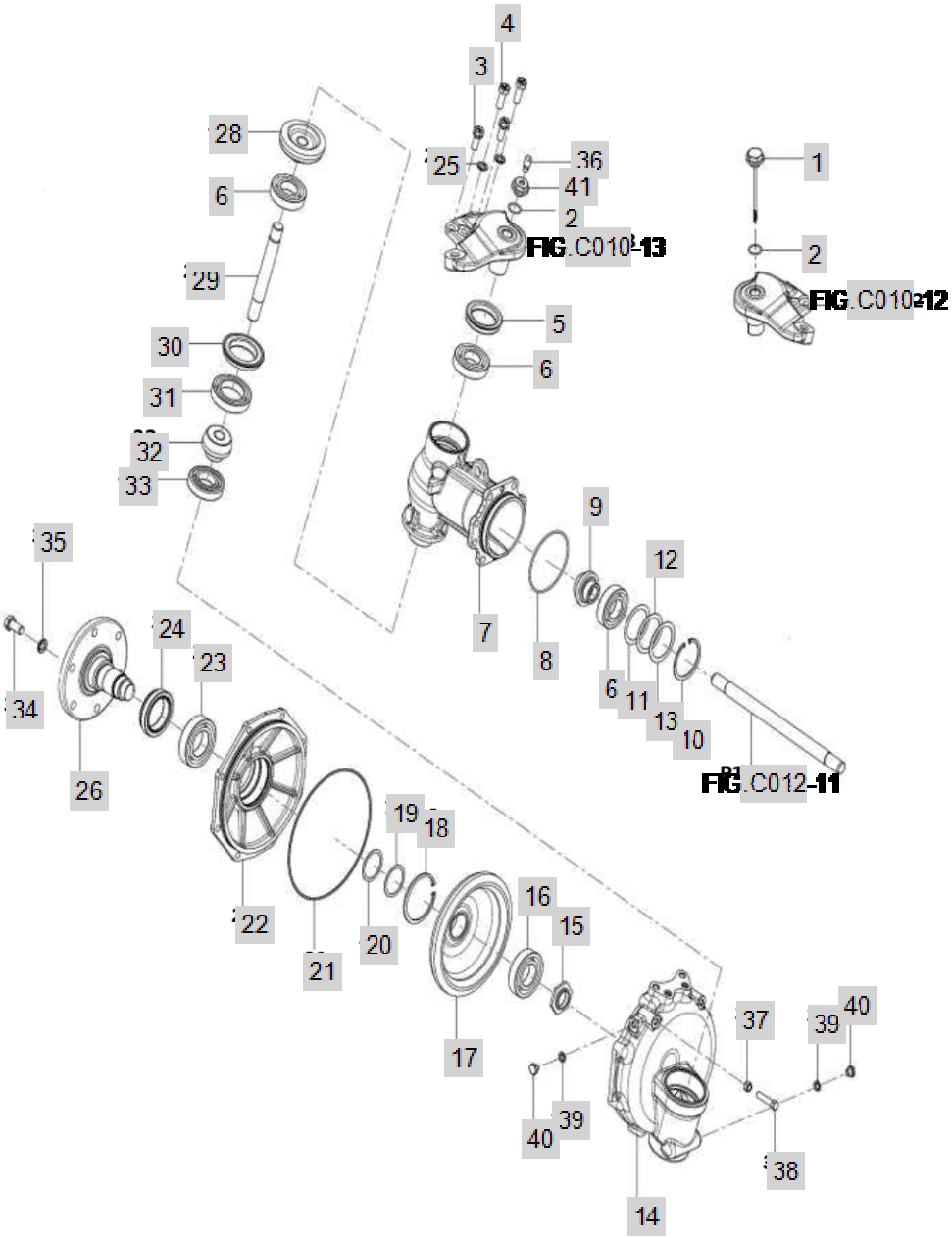

FIG C019-2 4015R	19. GEAR CASE, FRONT AXLE(2018.01)	Year/Month 2020/01

KeyNo.	Part Number	Part Name	Quantity	Other
1	TA00033805A	OIL GUAGE	1	
2	24311-000220	O-RING, DYNAMIC (Φ22)	2	
3	TA00033468B	BOLT W/ WASHER	4	
4	TA00033475A	RIMER BOLT	4	
5	FE78010000B	OIL SEAL (55X72X13.5)	2	
6	24101-062074	BALL BEARING (#6207)	6	
7	TA00033457C	CASE, FRONT GEAR	2	
8	24321-001050	O-RING	2	
9	TA00033461A	PINION, FRONT 1ST SHAFT	2	
10	22252-000720	RING, CIRCLIP (Φ 72)	2	
11	TA00033489A	SHIM 0.2T	2	
12	TA00033488A	SHIM 0.3T	2	
13	TA00033487A	SHIM 0.5T	2	
14	TA00033458B	GEAR BOX, FRONT	2	
15	TA00033481A	LOCK NUT	2	
16	24101-062084	Bearing, Ball (#6208)	2	
17	TA00033474A	GEAR, BEVEL 49T	2	
18	22252-000850	RING, CIRCLIP (Φ 85)	2	
19	TA00033486A	SHIM 0.2T	1	
20	TA00033485A	SHIM 0.5T	1	
21	TA00033939A	O RING	2	
22	TA00033459B	BEARING CASE, FRONT	1	
23	24101-062094	BALL BEARING (#6209)	2	
24	TA00041359A	OILSEAL	2	
24-1	TA00041352A	OILSEAL (AO26 TYPE)	2	
25	22217-120000	WASHER, SPRING (Φ 12)	2	
26	TA00033460A	SPINDLE, FRONT	2	
27	TA00033469A	BOLT W/ WASHER	16	
28	TA00033463A	FRONT 2ND AXLE LH	2	
29	TA00033464A	FRONT 2ND SHAFT	2	
30	TC60110000A3	SEAL	2	
31	24101-060104	Bearing, Ball (#6010)	2	
32	TA00033473A	GEAR, BEVEL 11T	2	
33	TC60340000A4	BEARING(TM207C3)	2	
34	TD23120000A4	BOLT	12	
35	22217-140000	WASHER, SPRING (Φ 14)	12	
36	TA00049842A	AIR BREATHER	1	
37	26716-100001	NUT	2	
38	26112-100452	BOLT	2	
39	22190-100000	WASHER	4	
40	23887-100002	SCREW,HEXAGONHEADCAP	4	
41	TA00049843A	ADAPTHER	1	
FIG.C010-12	C010		1	
FIG.C010-13	C010		1	
FIG.C012-11	C012		1	

FIG C020 4015R	20. SPACER	Year/Month 2020/01

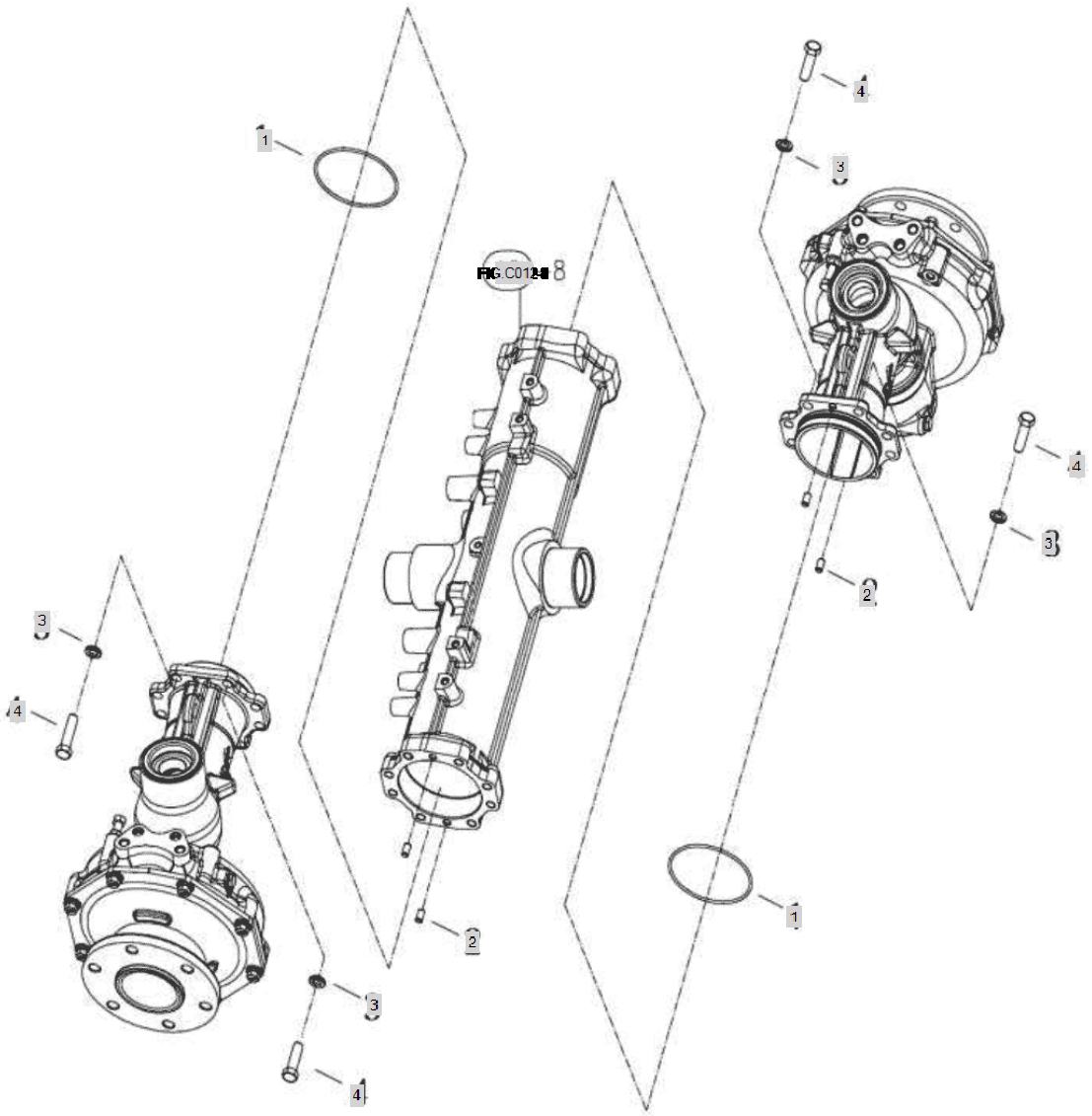

FIG C020 4015R	20. SPACER	Year/Month 2020/01

KeyNo.	Part Number	Part Name	Quantity	Other
1	24321-001050	O-RING	2	
2	22312-080140	PIN, DOWEL (8-14)	8	
3	22217-120000	WASHER, SPRING (Φ 12)	16	
4	TC60400000A		16	
4-1	TA00033470A	BOLT	16	
FIG.C012-8	C012		1	

FIG C032 4015R	32. P.S.T CYLINDER	Year/Month 2020/01

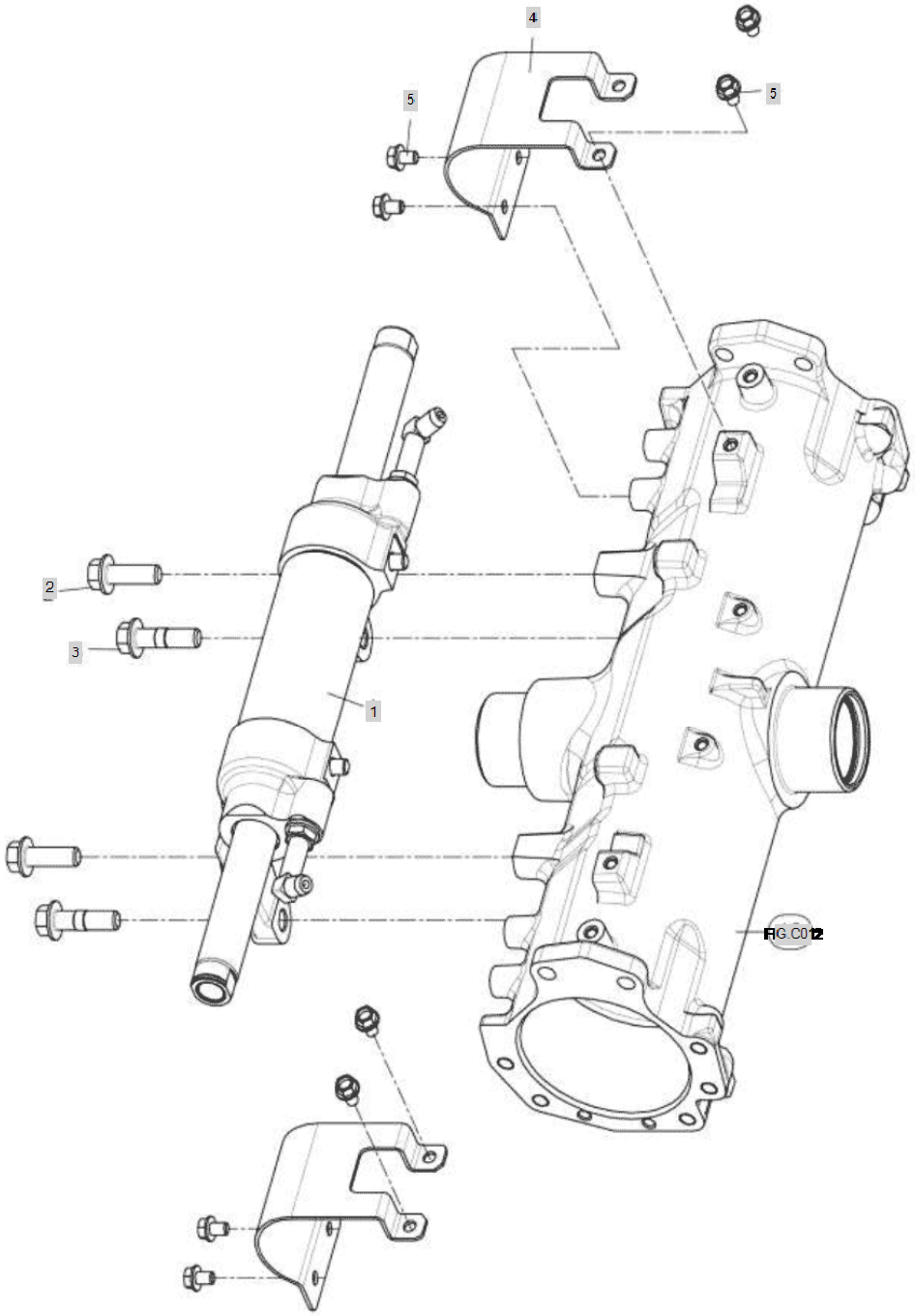

FIG C032 4015R	32. P.S.T CYLINDER	Year/Month 2020/01

KeyNo.	Part Number	Part Name	Quantity	Other
1	TC66030000E		1	
2	TC66010000A4	SCREW FLANGE	2	
3	TC66020000A4	REAMER BOLT M12x46	2	
4	TA00000834A	PST CYLINDER COVER	2	
5	26106-080122	Bolt, Hexa (8-12)	8	
FIG.C012	C012		1	

FIG C034 4015R	34. P.S.T HOSE	Year/Month 2020/01

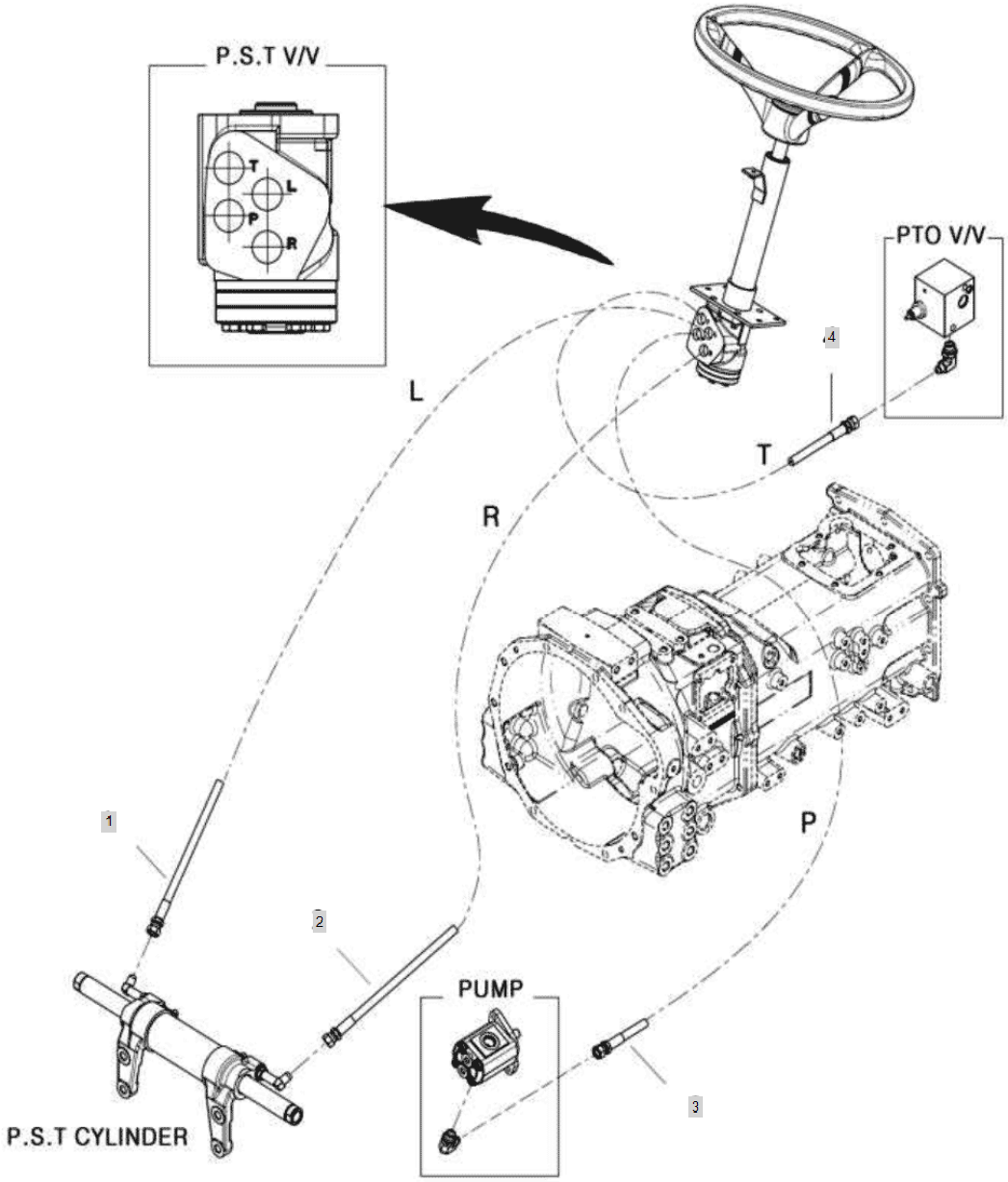

FIG C034 4015R	34. P.S.T HOSE	Year/Month 2020/01

KeyNo.	Part Number	Part Name	Quantity	Other
1	TA00015708B	HOSE, POWER STEERING	1	
2	TA00041384A	HOSE, PST(R)	1	
3	TA00039979C	HOSE(1/4)	1	
4	TA00040290A	HOSE	1	

FIG C037A-1 4015R	37. CLUTCH HOUSING(2017.10)	Year/Month 2020/01

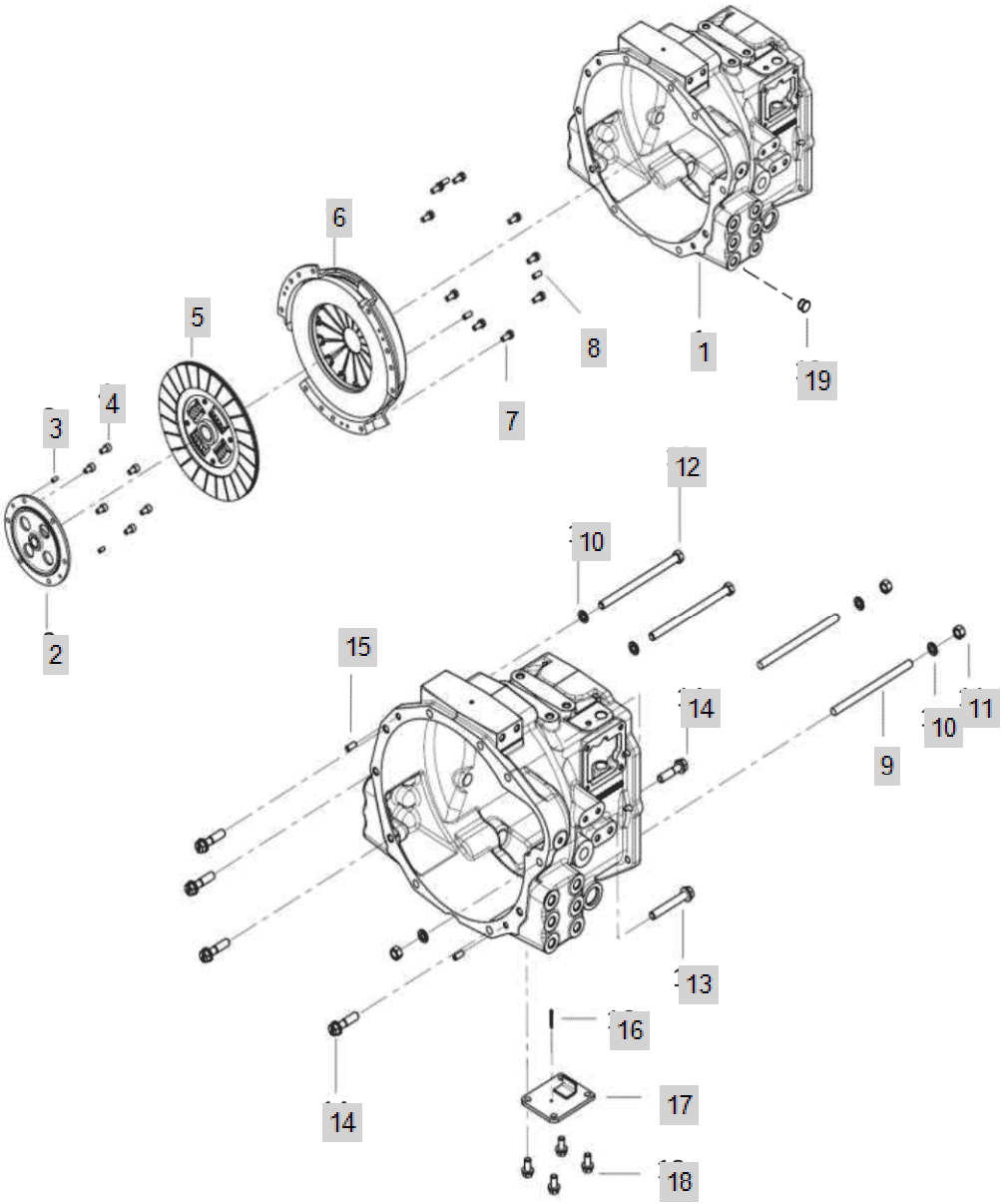

FIG C037A-1 4015R	37. CLUTCH HOUSING(2017.10)	Year/Month 2020/01

KeyNo.	Part Number	Part Name	Quantity	Other
1	TA00038686E	CLUTCH HOUSING	1	
2	TA00038871C	SLEEVE	1	
3	22351-060016	PIN, SPRING (6-16)	2	
4	26450-080142	BOLT	6	
5	TA00042141A	CLUTCH DISC ASSEMBLY	1	
6	TU38040000A	CLUTCH COVER ASS'Y	1	
7	26013-080202	Bolt, Hexa (8-20)	9	
8	22351-080018	PIN, SPRING (8-18)	3	
9	TA00040214B	BOLT	2	
10	22217-120000	WASHER, SPRING (Φ 12)	5	
11	26716-120002	BOLT,CYLINDER HEAD(B)	3	
12	TA00040213B	HEX BOLT	2	
13	TA00040292A	HEX BOLT	1	
14	FB36330000A4	Hex Bolt With Washer	5	
15	22312-080180	PIN, DOWEL (8-18)	2	
16	22417-300250	PIN , COTTER (3-25)	1	
17	TA00038610A	COVER, CLUTCH HOUSING	1	
18	26106-100202	HEX BOLT, (10-20)	4	
19	FB08090000A4	PLUG	12	
19-1	TTD4300000A4	PLUG15	8	

FIG C037A-2 4015R	37. CLUTCH HOUSING(2018.01)	Year/Month 2020/01

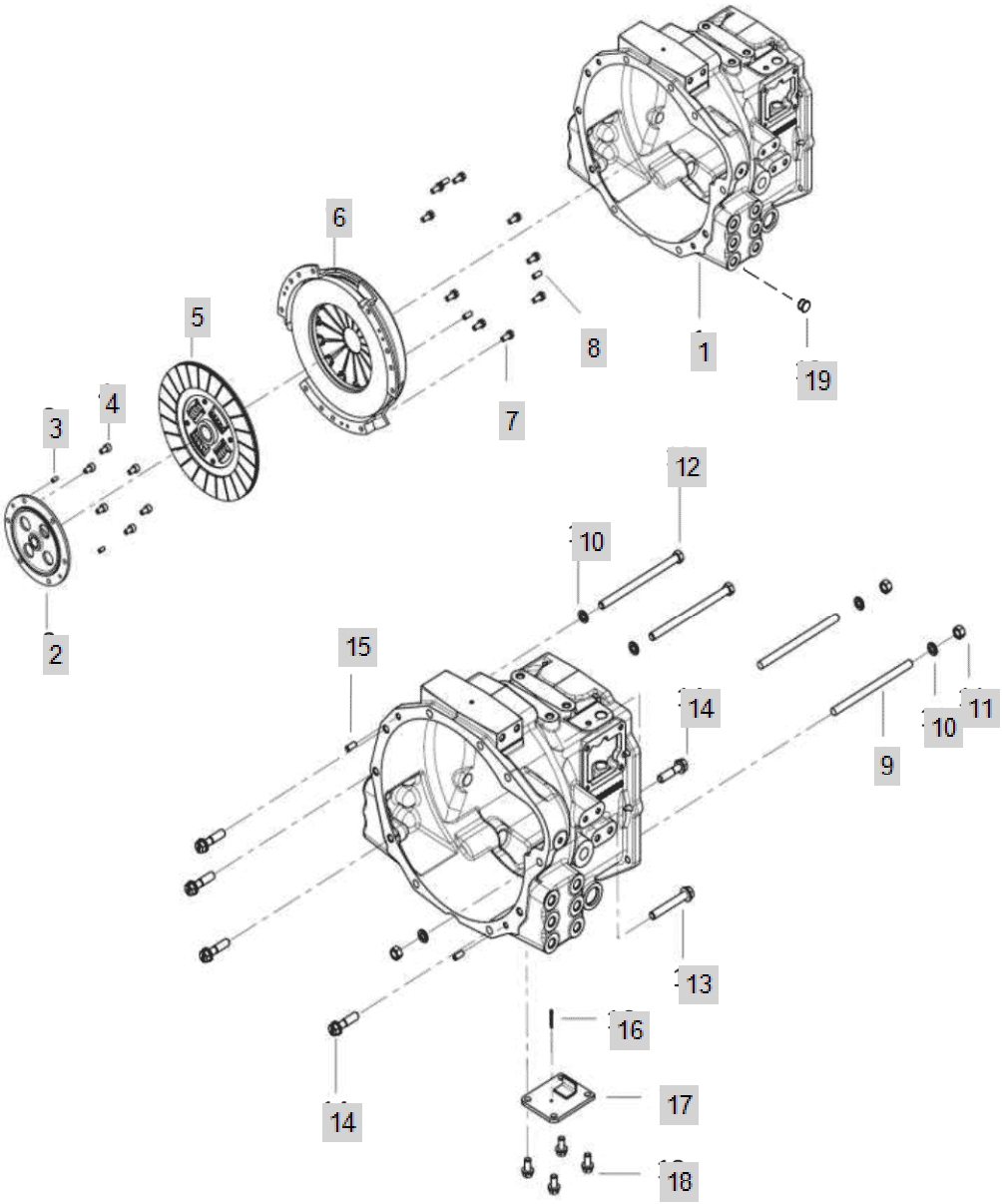

FIG C037A-2 4015R	37. CLUTCH HOUSING(2018.01)	Year/Month 2020/01

KeyNo.	Part Number	Part Name	Quantity	Other
1	TA00038686E	CLUTCH HOUSING	1	
2	TA00038871C	SLEEVE	1	
3	22351-060016	PIN, SPRING (6-16)	2	
4	26450-080142	BOLT	6	
5	TA00042141A	CLUTCH DISC ASSEMBLY	1	
6	TU38040000A	CLUTCH COVER ASS'Y	1	
7	26013-080202	Bolt, Hexa (8-20)	9	
8	22351-080018	PIN, SPRING (8-18)	3	
9	TA00040214B	BOLT	2	
10	22217-120000	WASHER, SPRING (Φ 12)	5	
11	26716-120002	BOLT,CYLINDER HEAD(B)	3	
12	TA00040213B	HEX BOLT	2	
13	TA00040292A	HEX BOLT	1	
14	FB36330000A4	Hex Bolt With Washer	5	
15	22312-080180	PIN, DOWEL (8-18)	2	
16	22417-300250	PIN , COTTER (3-25)	1	
17	TA00038610A	COVER, CLUTCH HOUSING	1	
18	26106-100202	HEX BOLT, (10-20)	4	
19	TA00055258A	PLUG(14)	12	
19-1	TTD4300000A4	PLUG15	12	
19-2	FB08090000A4	PLUG	12	

FIG C037A-3 4015R	37. CLUTCH HOUSING(2019.04)	Year/Month 2020/01

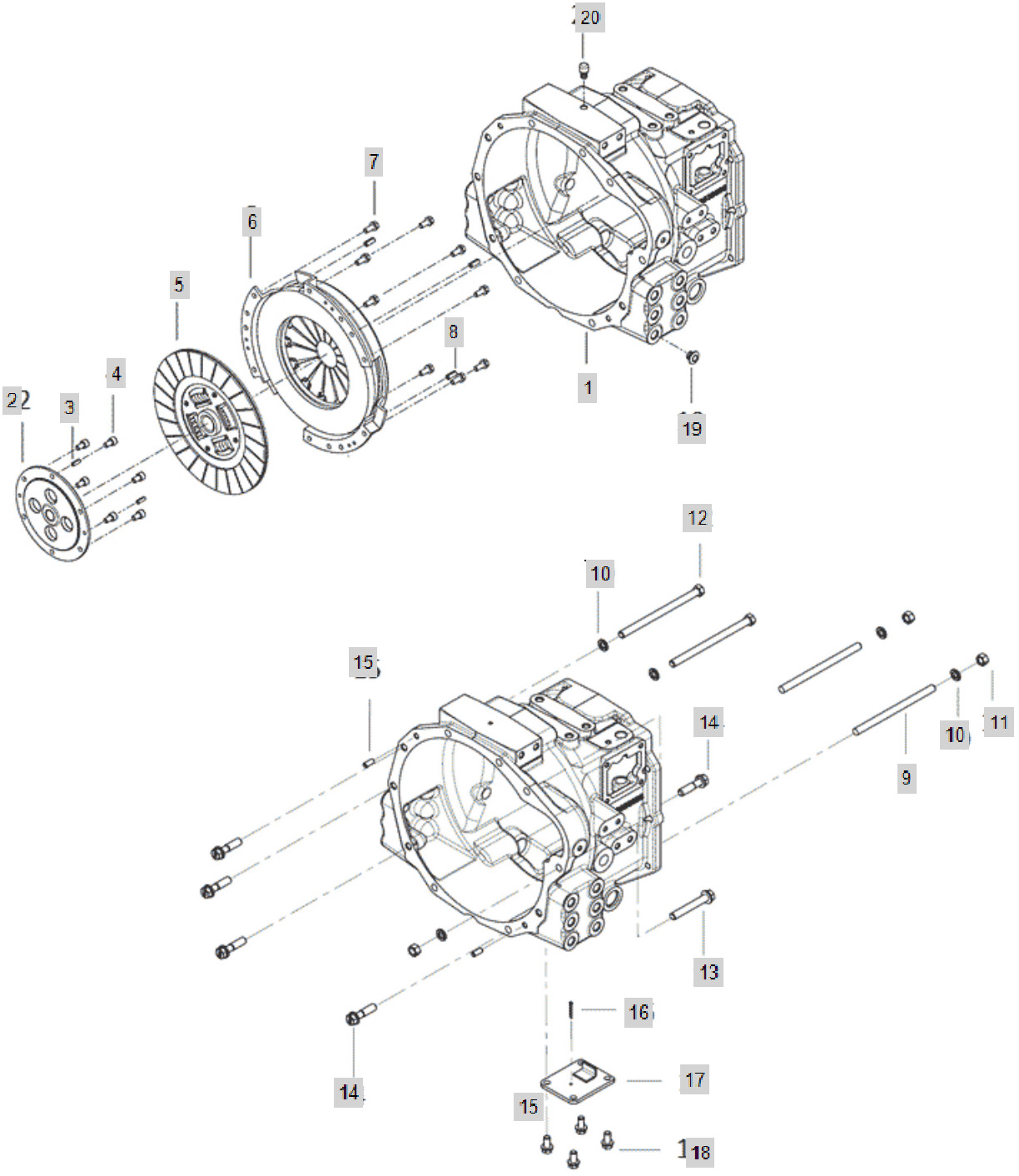

FIG C037A-3 4015R	37. CLUTCH HOUSING(2019.04)	Year/Month 2020/01

KeyNo.	Part Number	Part Name	Quantity	Other
1	TA00038686E	CLUTCH HOUSING	1	
2	TA00038871C	SLEEVE	1	
3	22351-060016	PIN, SPRING (6-16)	2	
4	26450-080142	BOLT	6	
5	TA00042141A	CLUTCH DISC ASSEMBLY	1	
6	TU38040000A	CLUTCH COVER ASS'Y	1	
7	26013-080202	Bolt, Hexa (8-20)	9	
8	22351-080018	PIN, SPRING (8-18)	3	
9	TA00040214B	BOLT	2	
10	22217-120000	WASHER, SPRING (Φ 12)	5	
11	26716-120002	BOLT,CYLINDER HEAD(B)	3	
12	TA00040213B	HEX BOLT	2	
13	TA00040292A	HEX BOLT	1	
14	FB36330000A4	Hex Bolt With Washer	5	
15	22312-080180	PIN, DOWEL (8-18)	2	
16	22417-300250	PIN , COTTER (3-25)	1	
17	TA00038610A	COVER, CLUTCH HOUSING	1	
18	26106-100202	HEX BOLT, (10-20)	4	
19	TA00055258A	PLUG(14)	12	
20	TA00034078A	AIR BREATHER	1	

FIG C038A 4015R	38. SHAFT, F/R DRV	Year/Month 2020/01

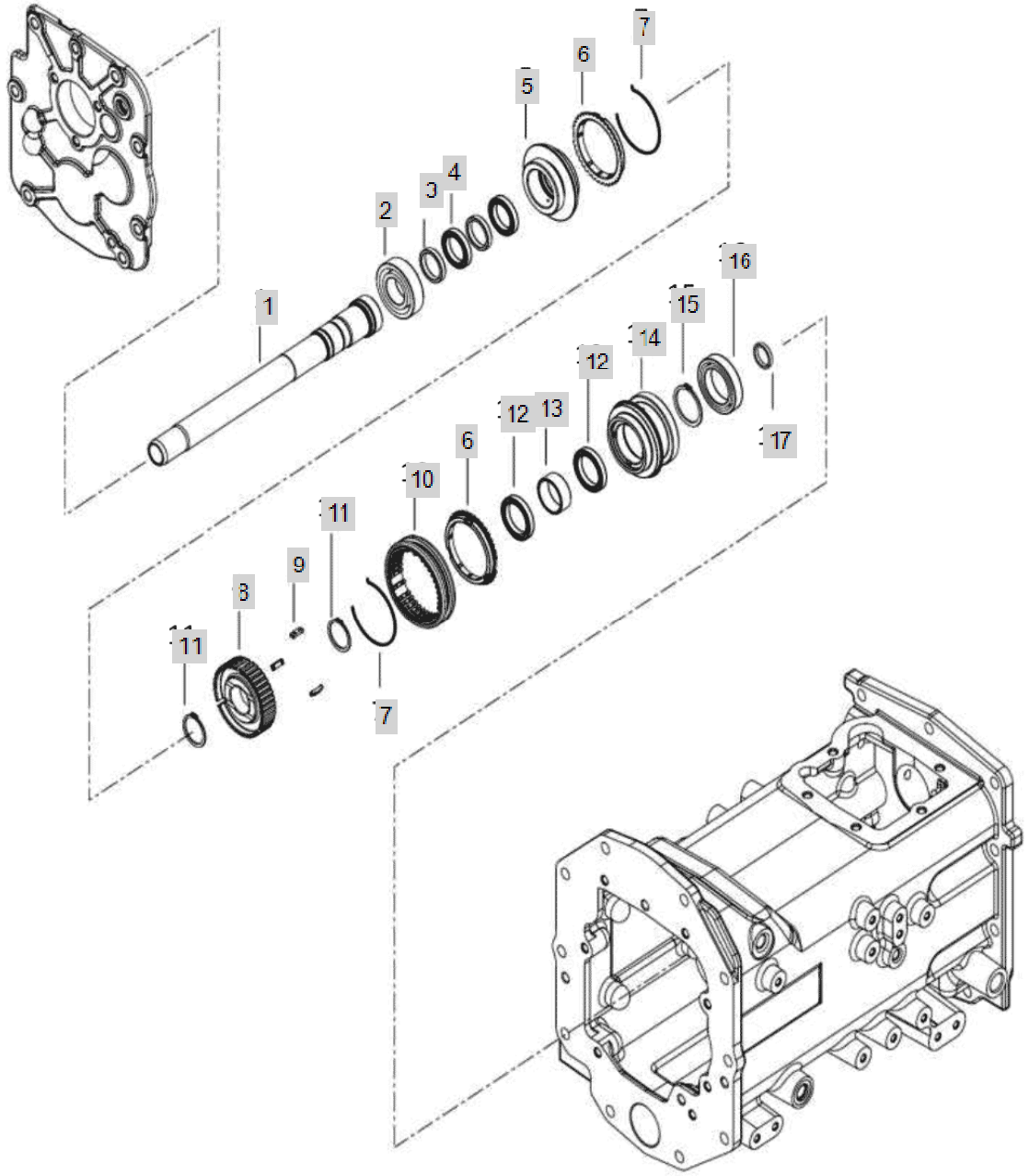

FIG C038A 4015R	38. SHAFT, F/R DRV	Year/Month 2020/01

KeyNo.	Part Number	Part Name	Quantity	Other
1	TA00037644D	SHAFT F/R DRV	1	
2	24101-062064	BALL BEARING (#6206)	1	
3	TA00037645B	SPACER	2	
4	TA00038275A	BEARING	2	
5	TA00037646B	GEAR BACKWARD DRV	1	
6	TA00038402A	SYNCHRONIZER RING	2	
7	TA00038401A	SPRING	2	
8	TA00038417A	HUB	1	
9	TA00038400A	KEY	3	
10	TA00038416A	SLEEVE	1	
11	22242-000320	SNAP RING, SHAFT (Φ 32)	2	
12	TA00038277A	BEARING (6807)	2	
13	TA00037729B	SPACER	1	
14	TA00037730C	GEAR FORWARD DRV	1	
15	22242-000400	SNAP RING, SHAFT (Φ 40)	1	
16	TA00019824A	BEARING 6908	1	
17	24421-203007	OIL SEAL	1	

FIG C039 4015R	39. CLUTCH RELEASE	Year/Month 2020/01

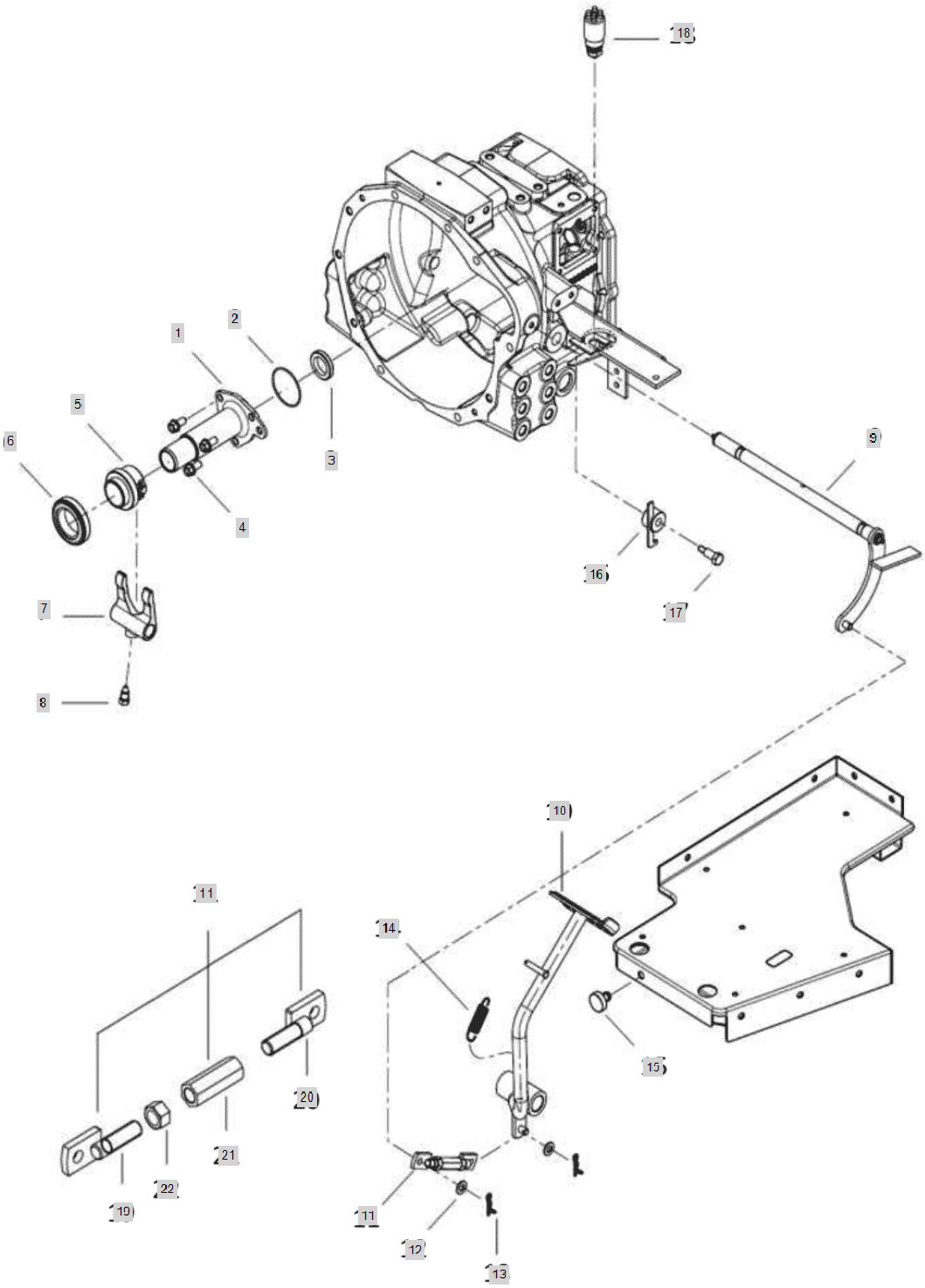

FIG C039 4015R	39. CLUTCH RELEASE	Year/Month 2020/01

KeyNo.	Part Number	Part Name	Quantity	Other
1	TA00038278A	COVER	1	
2	24341-000590	O RINGS	1	
3	24421-304508	OIL SEAL (TC304508)	1	
4	26106-100202	HEX BOLT, (10-20)	3	
5	TA00038430A	SLEEVE	1	
6	TT40030000A4	BEARING TK45	1	
7	TA00038451B	YORK, RELEASE	1	
8	TA00038452A	BOLT	1	
9	TA00038454E	RELEASE SHAFT	1	
10	TA00038488C	CLUTCH PEDAL	1	
11	TA00038473B	CLUTCH ROAD	1	
12	22127-100000	WASHER, PLAIN (Φ 10)	2	
13	RR51230000C	SNAP PIN	2	
14	FEB0150000B	SPRING	1	
15	TA00016153A	RUBBER STOPER	1	
16	TA00040746C	LOCK, CLUTCH PEDAL	1	
17	TA00039260B	BOLT	1	
18	HA00000361A	SWITCH,SAFETY	1	
19	TA00038481B	ROD(REAR)	1	
20	TA00038478A	ROD, FRONT	1	
21	TT67010000A	TURN BUCKLE	1	
22	26716-120002	BOLT,CYLINDER HEAD(B)	1	

FIG C042A 4015R	42. GEAR, MAIN SHIFT	Year/Month 2020/01

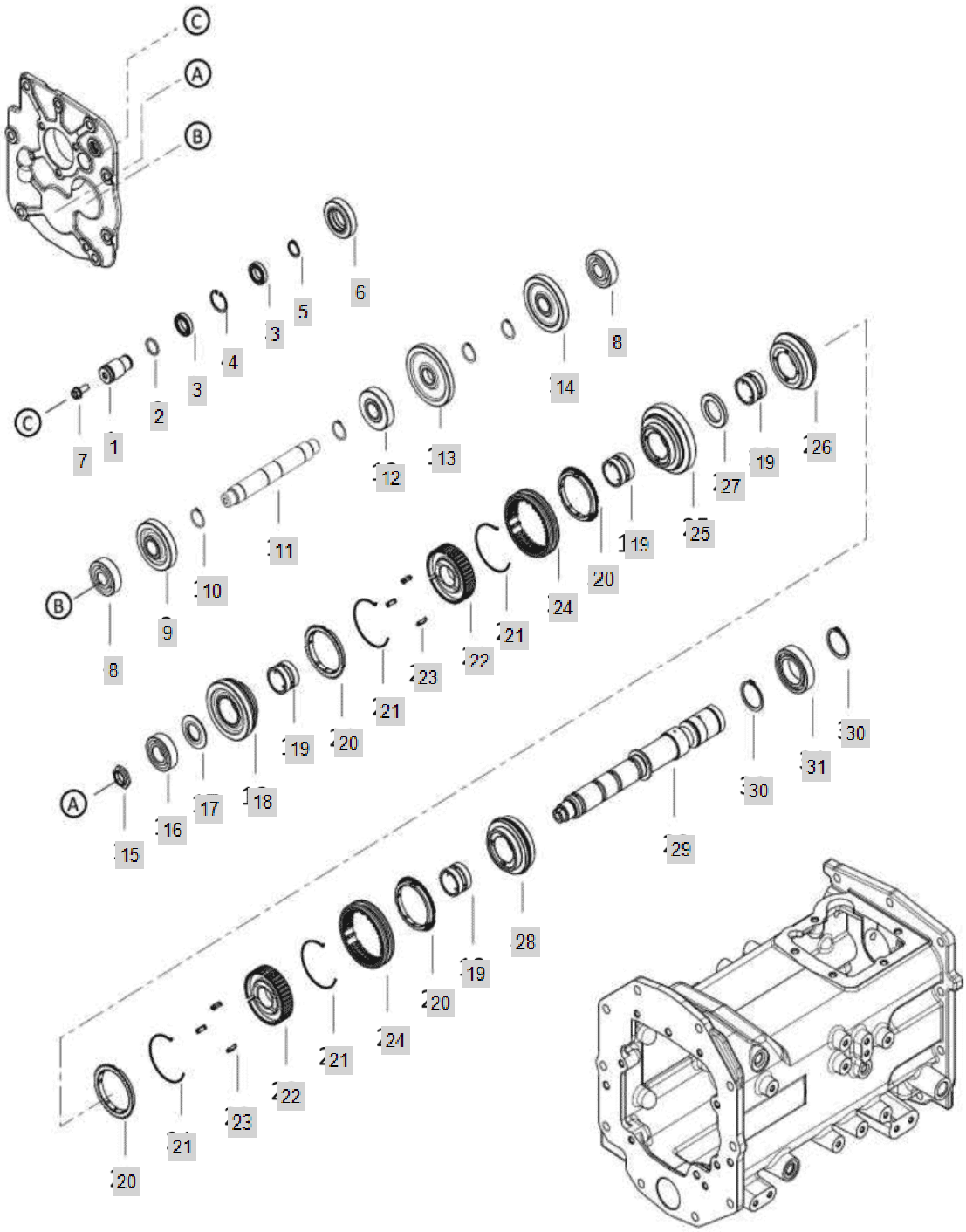

FIG C042A 4015R	42. GEAR, MAIN SHIFT	Year/Month 2020/01

KeyNo.	Part Number	Part Name	Quantity	Other
1	TA00038271B	SHAFT, IDLE	1	
2	24311-000210	O-RING, DYNAMIC (Φ21)	1	
3	24101-068044	DEEP GROOVE BALL BEARING	1	
4	22252-000320	RING, CIRCLIP (Φ 32)	1	
5	22242-000200	SNAP RING, SHAFT (Φ 20)	1	
6	TA00038272B	GEAR	1	
7	26106-100202	HEX BOLT, (10-20)	1	
8	24101-063044	BALL BEARING	2	
9	TA00037669C	GEAR 2, MAIN SHIFT	1	
10	22242-000250	SNAP RING, SHAFT (Φ 25)	4	
11	TA00037668E	SHAFT, MAIN SHIFT	1	
12	TA00037671C	GEAR 1, MAIN SHIFT	1	
13	TA00037672C	GEAR 4, MAIN SHIFT	1	
14	TA00037673B	GEAR 3, MAIN SHIFT	1	
15	TA00038423A	NUT	1	
16	24101-062054	Bearing, Ball (#6205)	1	
17	TA00038424B	SPACER	1	
18	TA00038426C	GEAR-M/SHIFT DRVN 2	1	
19	TA00038425C	SLEEVE	4	
20	TA00038402A	SYNCHRONIZER RING	4	
21	TA00038401A	SPRING	4	
22	TA00038417A	HUB	2	
23	TA00038400A	KEY	6	
24	TA00038416A	SLEEVE	2	
25	TA00038285C	GEAR-M/SHIFT DRVN 1	1	
26	TA00038283C	GEAR-M/SHIFT DRVN 4	1	
27	TA00038280A	SPACER	1	
28	TA00038281C	GEAR-M/SHIFT DRVN 3	1	
29	TA00038472D	SHAFT-M/STHIFT	1	
30	22242-000400	SNAP RING, SHAFT (Φ 40)	2	
31	TA00038427A	BEARING	1	

FIG C043-1 4015R	43. SHUTTLE ASS'Y	Year/Month 2020/01

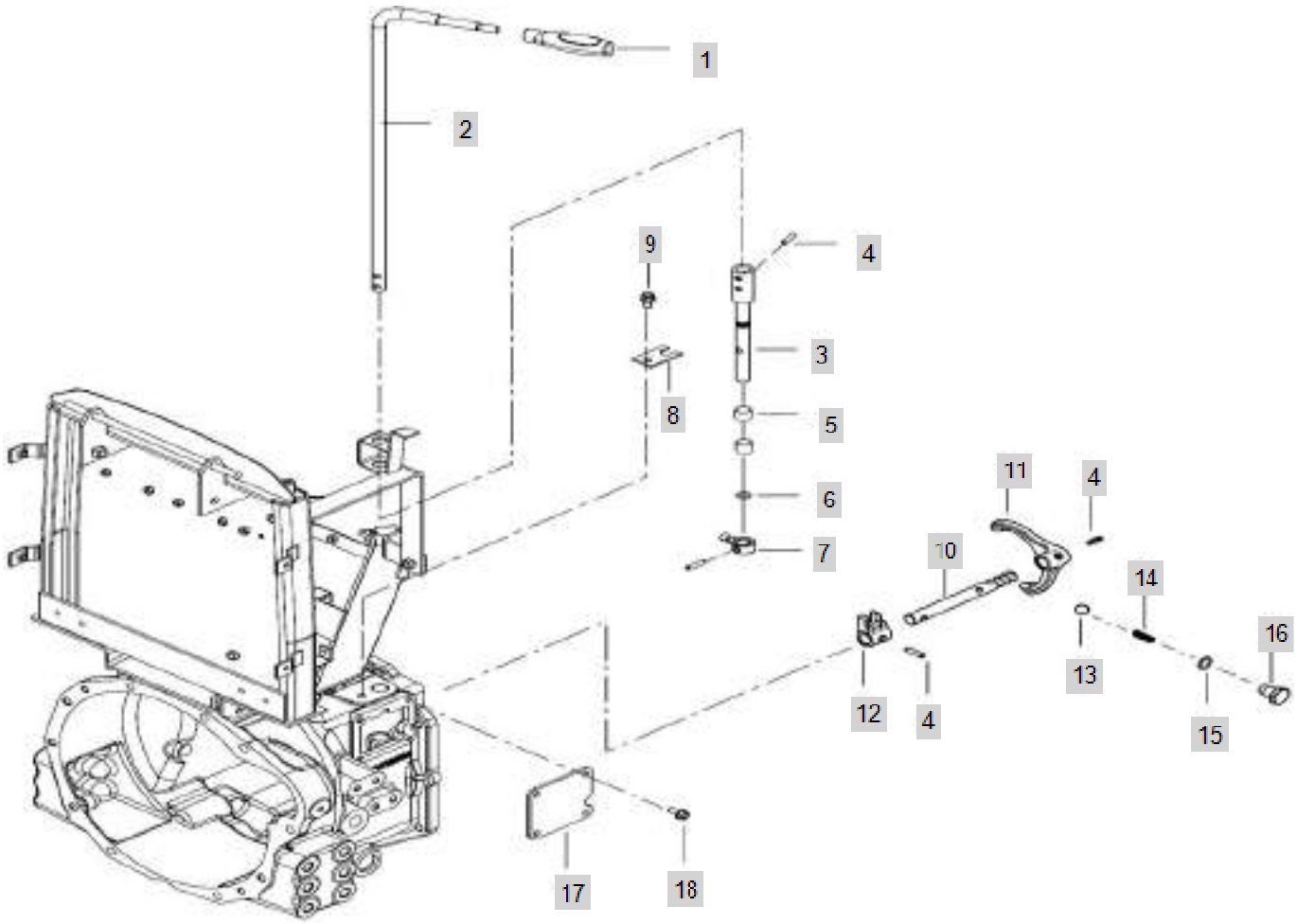

FIG C043-1 4015R	43. SHUTTLE ASS'Y	Year/Month 2020/01

KeyNo.	Part Number	Part Name	Quantity	Other
1	TA00015799B	KNOB, SHUTTLE LEVER	1	
2	TA00040784B	LEVER, SHUTTLE	1	
3	TA00040783B	SHAFT, SHUTTLE	1	
4	22351-060025	PIN, SPRING (6-25)	4	
5	24550-016150	DRYBUSH	2	
6	24311-000120	O-RING, DYNAMIC (Φ12)	1	
7	TA00038532A	ARM-M/SHIFT	1	
8	TA00039028A	PLATE	1	
9	26106-080162	SCREW,HEXFLANGEHEADCAP	1	
10	TA00038503A	SHAFT, F/R	1	
11	TA00038785A	FORK, SHUTTLE	1	
12	TA00038399A	SHIFTER, SHUTTLE	1	
13	24190-110001	Ball, Steel (11/32)	1	
14	TA00038502A	SPRING	1	
15	24311-000150	O-RING, DYNAMIC (Φ15)	1	
16	TA00038524C	BOLT	1	
17	TA00039099A	COVER	1	
18	26106-080182	SCREW,HEXFLANGEHEADCAP	4	

FIG C043-2 4015R	43. SHUTTLE ASS'Y	Year/Month 2020/01

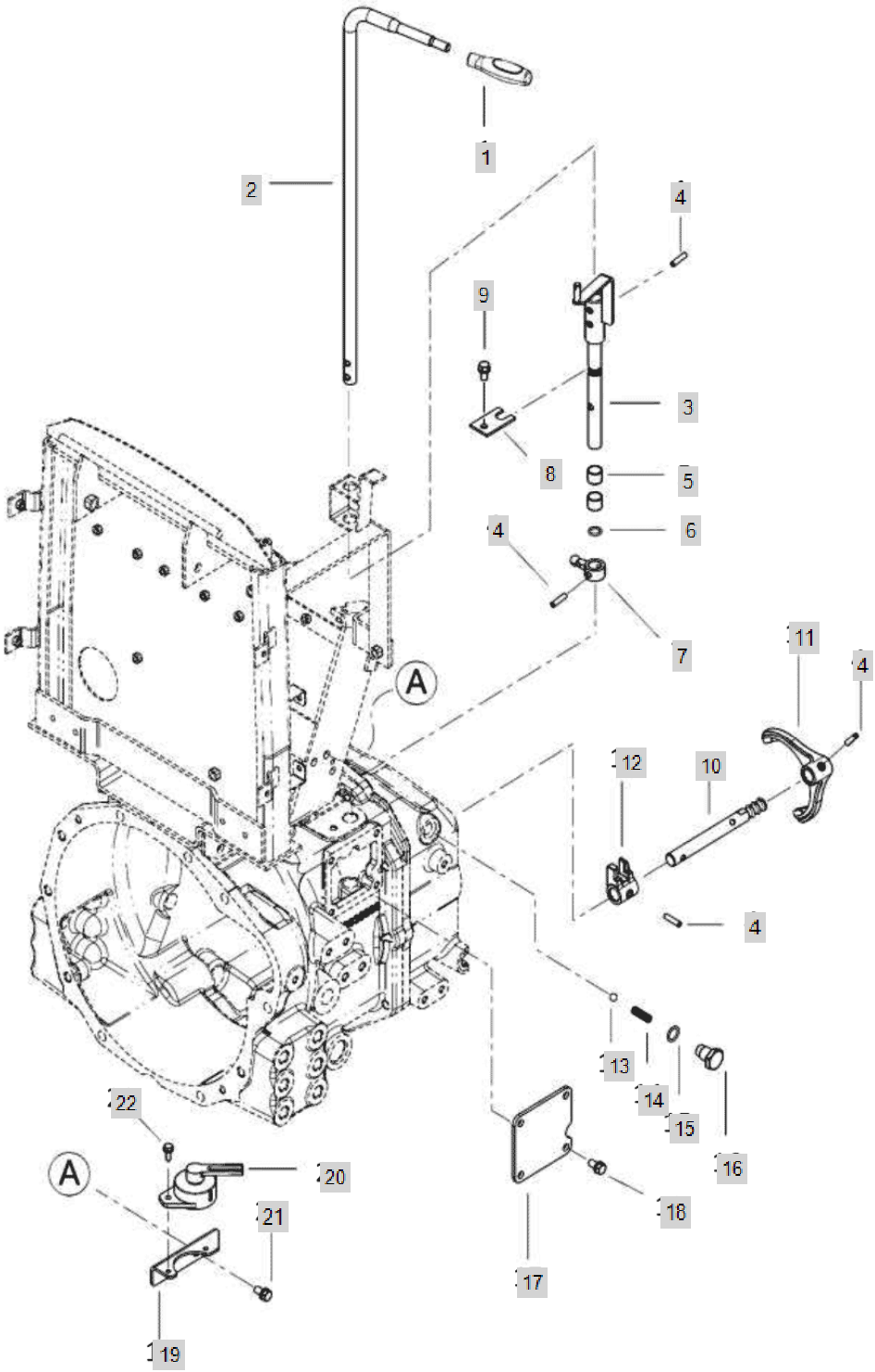

FIG C043-2 4015R	43. SHUTTLE ASS'Y	Year/Month 2020/01

KeyNo.	Part Number	Part Name	Quantity	Other
1	TA00015799B	KNOB, SHUTTLE LEVER	1	
2	TA00040784B	LEVER, SHUTTLE	1	
3	TA00040783B	SHAFT, SHUTTLE	1	
4	22351-060025	PIN, SPRING (6-25)	5	
5	24550-016150	DRYBUSH	2	
6	24311-000120	O-RING, DYNAMIC (Φ12)	1	
7	TA00038532A	ARM-M/SHIFT	1	
8	TA00039028A	PLATE	1	
9	26106-080162	SCREW,HEXFLANGEHEADCAP	1	
10	TA00038503A	SHAFT, F/R	1	
11	TA00038785A	FORK, SHUTTLE	1	
12	TA00038399A	SHIFTER, SHUTTLE	1	
13	24190-110001	Ball, Steel (11/32)	1	
14	TA00038502A	SPRING	1	
15	24311-000150	O-RING, DYNAMIC (Φ15)	1	
16	TA00038524C	BOLT	1	
17	TA00039099A	COVER	1	
18	26106-080182	SCREW,HEXFLANGEHEADCAP	4	
19	TA00047516A	BRACKET ASSY	1	
20	TCD9110000B		1	
21	26106-080202	SQR FLANGE BOLT	2	
22	26106-060122	HEX BOLT (6-12)	2	

FIG C044-1 4015R	44. TRANSMISSION CASE	Year/Month 2020/01

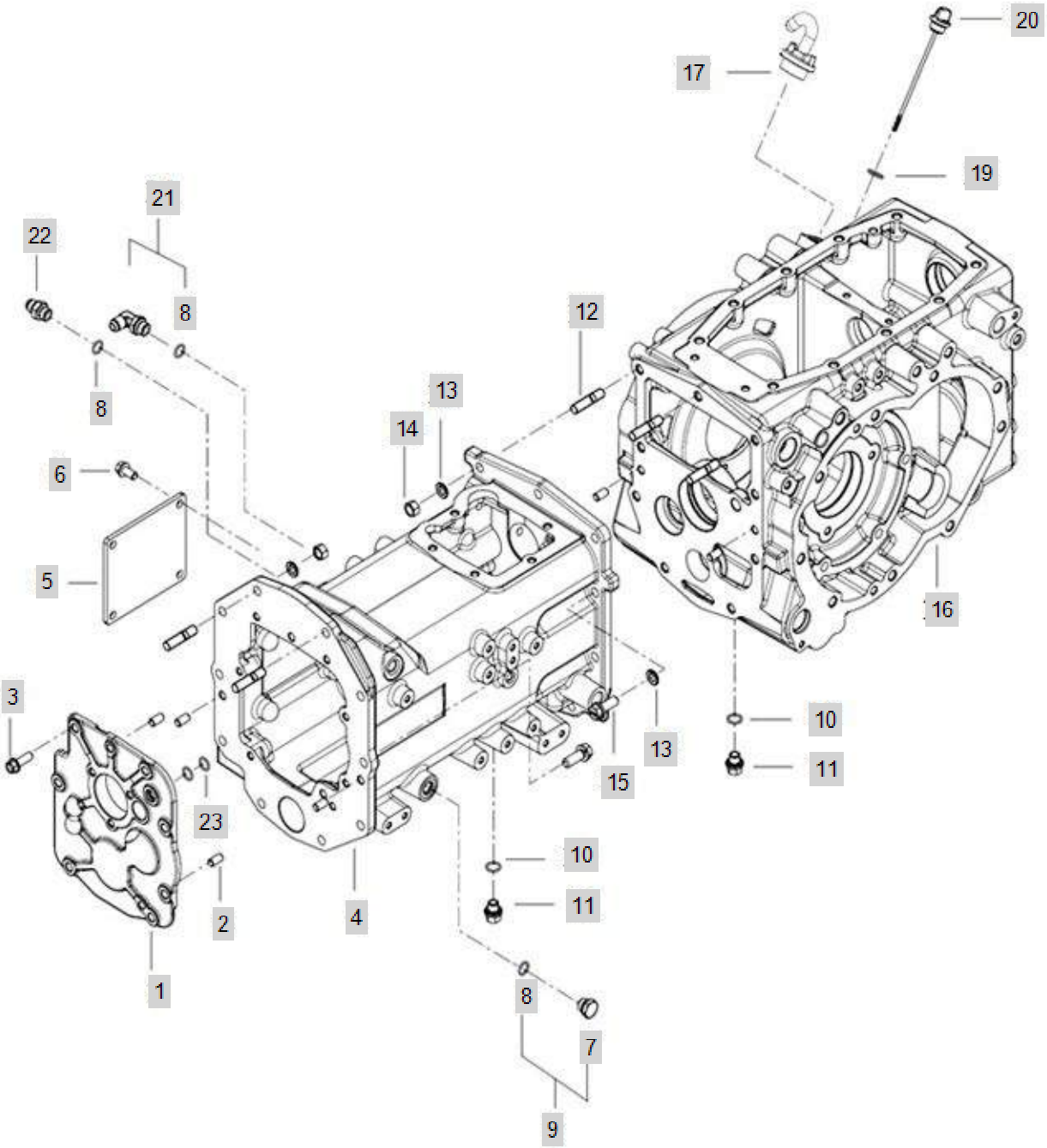

FIG C044-1 4015R	44. TRANSMISSION CASE	Year/Month 2020/01

KeyNo.	Part Number	Part Name	Quantity	Other
1	TA00038262C	PLATE	1	
2	22312-100180	PIN, DOWEL (10-18)	6	
3	26106-100302	HEXFLANGEBOLT	7	
4	TA00038687I	MISSION CASE	1	
5	TA00038613A	MAIN SHIFT FORK COVER	1	
6	26106-100202	HEX BOLT, (10-20)	4	
7	NTA1130100A9		1	
8	24311-000140	O-RING, DYNAMIC (Φ14)	3	
9	NTA1130000A4	PLUG	1	
10	24311-000160	O-RING, DYNAMIC (Φ16)	2	
11	TB28120000C	PLUG	2	
12	FT80120000A4	StudBolt(12X38)	5	
13	22217-120000	WASHER, SPRING (Φ 12)	19	
14	26716-120002	BOLT,CYLINDER HEAD(B)	5	
15	TH22090000A4	BOLT (M12 P1.75X35)	14	
16	TA00038688H	REAR AXLE CASE	1	
17	FT80370000A4	CAP,INTAKE	1	
19	24311-000180	O-RING, DYNAMIC (Φ18)	1	
20	TA00038076A	LOD	1	
21	CEE4050000A	ELBOW(3/8)	1	
22	TTA3880000A4	Adapt, Connect PF3/8	1	
23	24341-000160	O-RING, FIX (Φ16)	2	

FIG C044-2 4015R	44. TRANSMISSION CASE(2018.02)	Year/Month 2020/01

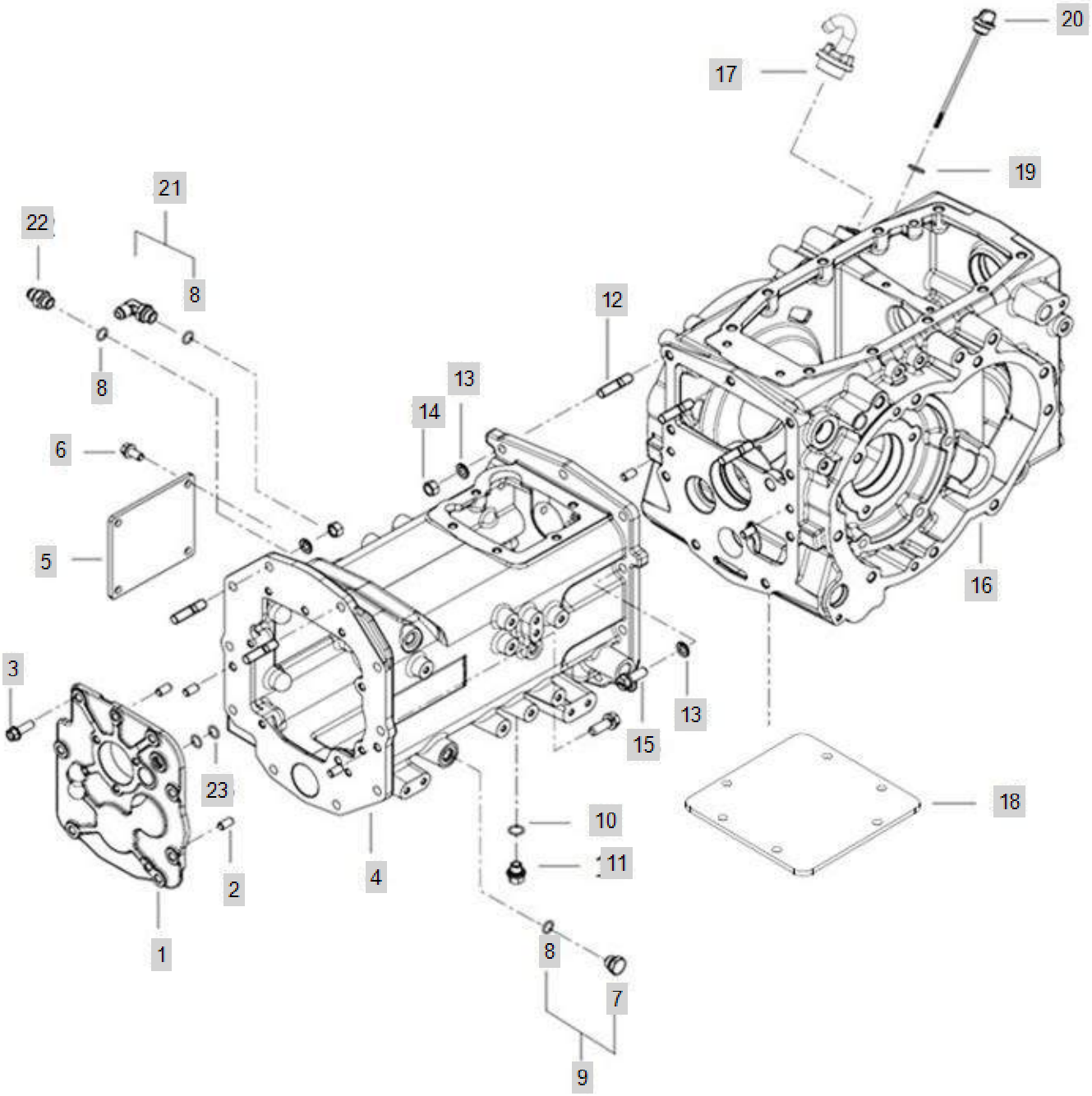

FIG C044-2 4015R	44. TRANSMISSION CASE(2018.02)	Year/Month 2020/01

KeyNo.	Part Number	Part Name	Quantity	Other
1	TA00038262C	PLATE	1	
2	22312-100180	PIN, DOWEL (10-18)	6	
3	26106-100302	HEXFLANGEBOLT	7	
4	TA00038687I	MISSION CASE	1	
5	TA00038613A	MAIN SHIFT FORK COVER	1	
6	26106-100202	HEX BOLT, (10-20)	4	
7	NTA1130100A9		1	
8	24311-000140	O-RING, DYNAMIC (Φ14)	3	
9	NTA1130000A4	PLUG	1	
10	24311-000160	O-RING, DYNAMIC (Φ16)	2	
11	TB28120000C4	DRAIN PLUG	2	
12	FT80120000A4	StudBolt(12X38)	5	
13	22217-120000	WASHER, SPRING (Φ 12)	19	
14	26716-120002	BOLT,CYLINDER HEAD(B)	5	
15	TH22090000A4	BOLT (M12 P1.75X35)	14	
16	TA00050237B	REAR AXLE CASE	1	
16-1	TA00043199D	REAR AXLE CASE	1	
17	FT80370000A4	CAP,INTAKE	1	
18	TA00054742A	COVER, MID PTO	2	
19	24311-000180	O-RING, DYNAMIC (Φ18)	1	
20	TA00038076A	LOD	1	
21	CEE4050000A	ELBOW(3/8)	1	
22	TTA3880000A4	Adapt, Connect PF3/8	1	
23	24341-000160	O-RING, FIX (Φ16)	2	

FIG C044-3 4015R	44. TRANSMISSION CASE(2019.01)	Year/Month 2020/01

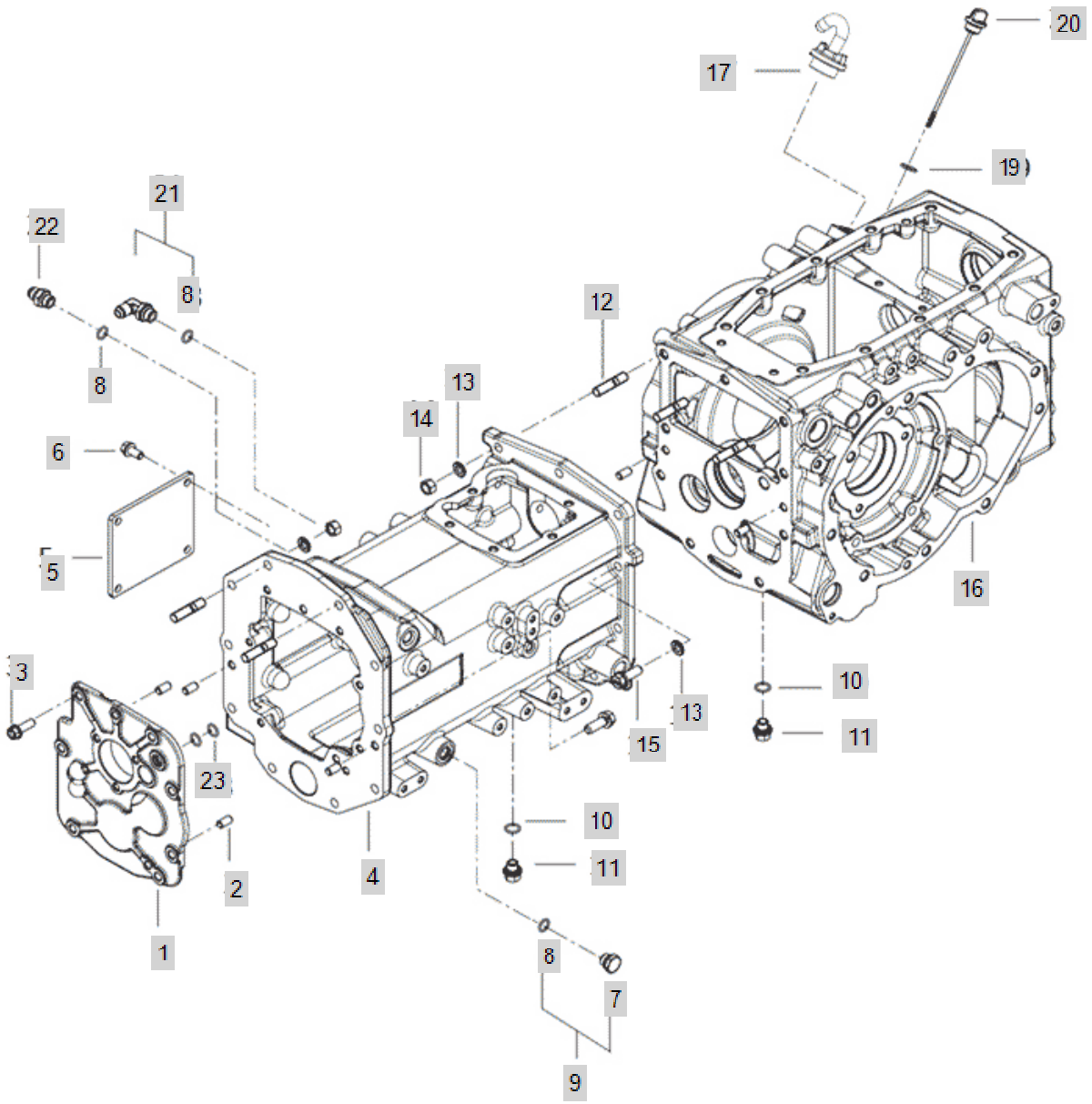

FIG C044-3 4015R	44. TRANSMISSION CASE(2019.01)	Year/Month 2020/01

KeyNo.	Part Number	Part Name	Quantity	Other
1	TA00038262C	PLATE	1	
2	22312-100180	PIN, DOWEL (10-18)	6	
3	26106-100302	HEXFLANGEBOLT	7	
4	TA00038687I	MISSION CASE	1	
5	TA00038613A	MAIN SHIFT FORK COVER	1	
6	26106-100202	HEX BOLT, (10-20)	4	
7	NTA1130100A9		1	
8	24311-000140	O-RING, DYNAMIC (Φ14)	3	
9	NTA1130000A4	PLUG	1	
10	24311-000160	O-RING, DYNAMIC (Φ16)	2	
11	TB28120000C4	DRAIN PLUG	2	
12	FT80120000A4	StudBolt(12X38)	5	
13	22217-120000	WASHER, SPRING (Φ 12)	19	
14	26716-120002	BOLT,CYLINDER HEAD(B)	5	
15	TH22090000A4	BOLT (M12 P1.75X35)	14	
16	TA00043199F	REAR AXLE CASE	1	
16-1	TA00050237B	REAR AXLE CASE	1	DELETE
17	FT80370000A4	CAP,INTAKE	1	
19	24311-000180	O-RING, DYNAMIC (Φ18)	1	
20	TA00038076A	LOD	1	
21	CEE4050000A	ELBOW(3/8)	1	
22	TTA3880000A4	Adapt, Connect PF3/8	1	
23	24341-000160	O-RING, FIX (Φ16)	2	

FIG C057A 4015R	57. GEAR, RANGE SHIFT	Year/Month 2020/01

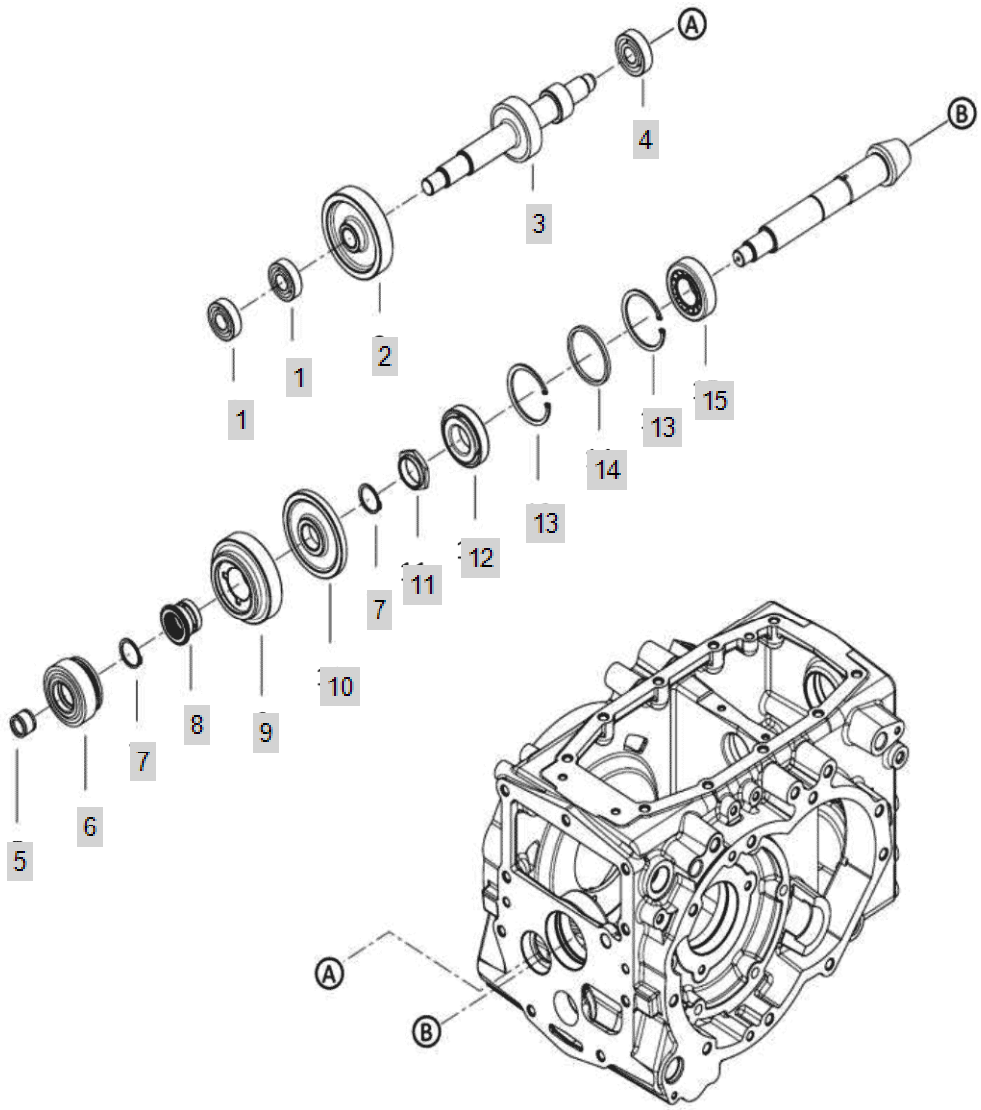

FIG C057A 4015R	57. GEAR, RANGE SHIFT	Year/Month 2020/01

KeyNo.	Part Number	Part Name	Quantity	Other
1	24101-062044	Bearing, Ball (#6204)	0	
2	TA00038116B	GEAR RANGE DRIVE	0	
3	TA00038118C	SHAFT RANGE W/GEAR	0	
4	24101-063044	BALL BEARING	0	
5	24161-202620	NIDDLE BEARING	0	
6	TA00038536B	GEAR, RANGE DRIVEN 2	0	
7	22242-000320	SNAP RING, SHAFT (Φ 32)	0	
8	TA00038539C	SLEEVE	0	
9	TA00038571C	GEAR, RANGE DRIVEN 1	0	
10	TA00038573C	GEAR, 4WD DRIVE	0	
11	TA00038802A	LOCK NUT	0	
12	24142-302070	TAPER ROLLER BEARING	0	
13	22252-000720	RING, CIRCLIP (Φ 72)	0	
14	TA00038583A	SPACER	0	
15	TA00038582A	TAPER ROLLER BEARING	0	

FIG C062 4015R	62. MAIN P.T.O SHAFT	Year/Month 2020/01

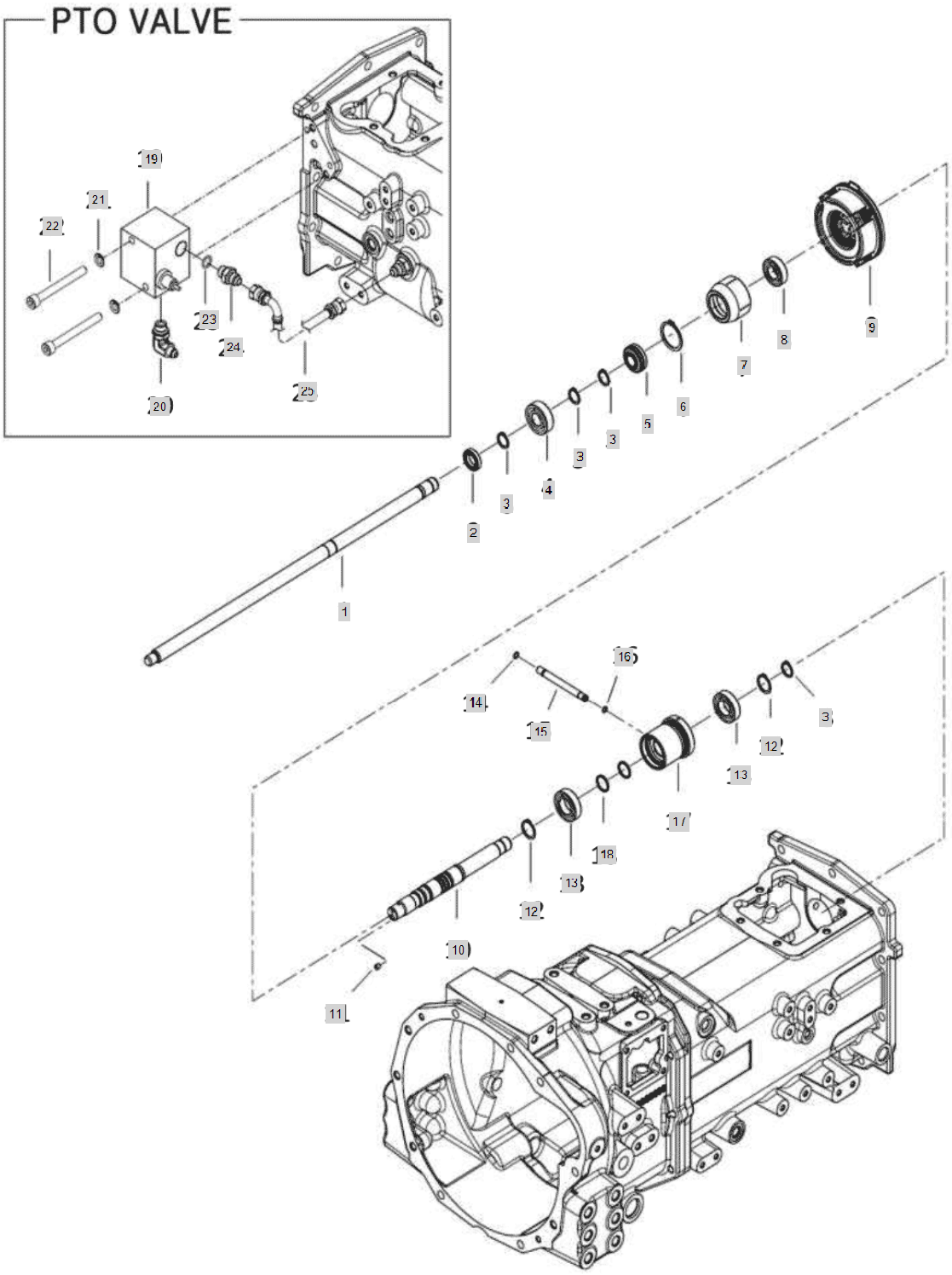

FIG C062 4015R	62. MAIN P.T.O SHAFT	Year/Month 2020/01

KeyNo.	Part Number	Part Name	Quantity	Other
1	TA00038249C	PTO SHAFT	1	
2	24421-203007	OIL SEAL	1	
3	22242-000200	SNAP RING, SHAFT (Φ 20)	4	
4	24101-068044	DEEP GROOVE BALL BEARING	1	
5	TA00038282A	JOINT	1	
6	22242-000400	SNAP RING, SHAFT (Φ 40)	1	
7	TA00038284A	HUB, PTO CLUTCH	1	
8	24101-060044	Bearing, Ball (#6004)	1	
9	TA00038773C	PTO CLUTCH PACK	1	
10	TA00038289B	SHAFT, PTO DRIVE	1	
11	TT64080000A4	RETAININGSCREWM7X1	1	
12	22242-000250	SNAP RING, SHAFT (Φ 25)	2	
13	24101-060054	BALL BEARING (#6005)	1	
14	24341-000080	O-RING	1	
15	TA00038286C	PIPE	1	
16	24341-000070	O-RING, FIX (Φ7)	1	
17	TA00038287B	SLEEVE	1	
18	TA00038288A	SEALING	2	
19	TA00041661A	PTO VALVE	1	
20	NT34620000A4	ELBOW	1	
21	22217-100000	WASHER, SPRING (Φ 10)	2	
22	26450-101002	BOLT	2	
23	24311-000140	O-RING, DYNAMIC (Φ14)	1	
24	TTA3880000A4	Adapt, Connect PF3/8	1	
25	TA00041553A	HOSE	1	

FIG C063-1 4015R	63. PTO DRIVE SHAFT	Year/Month 2020/01

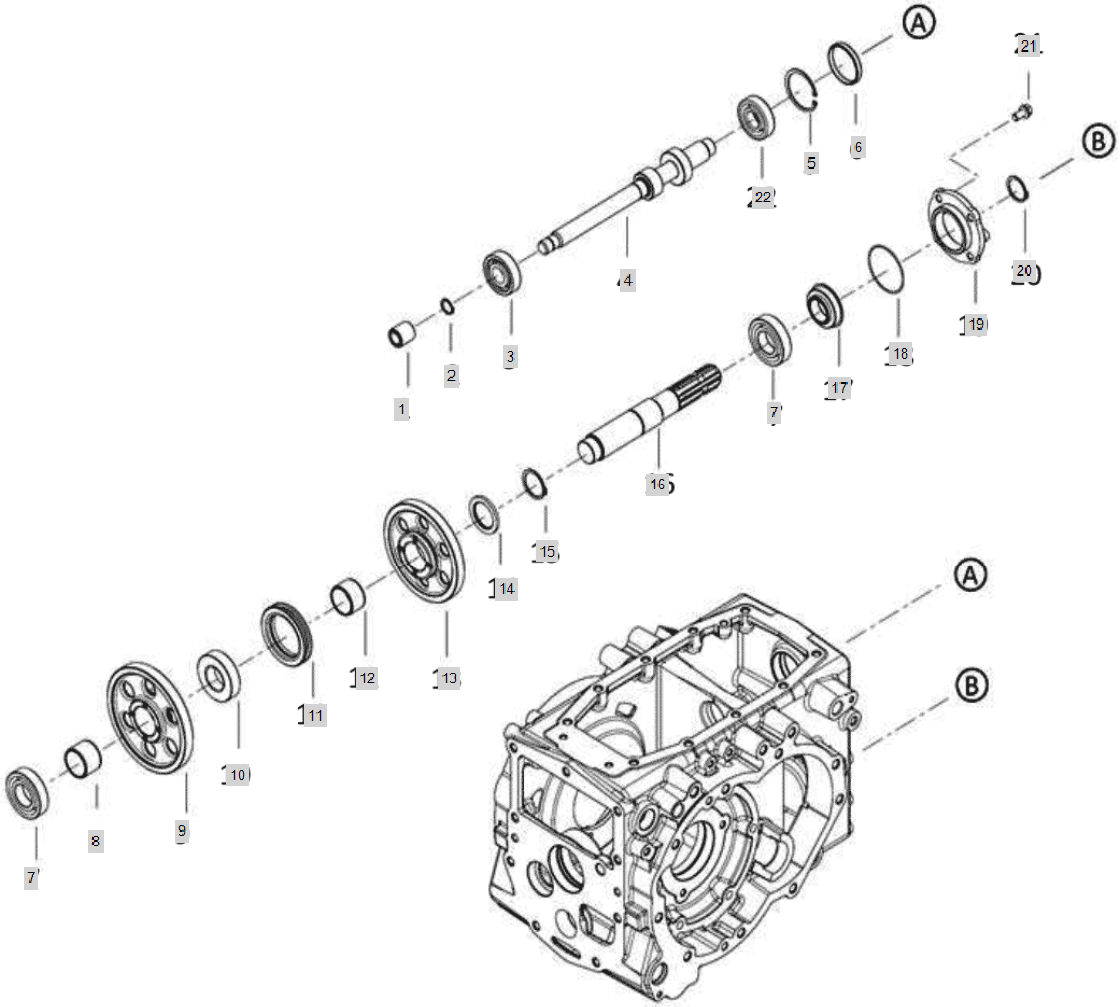

FIG C063-1 4015R	63. PTO DRIVE SHAFT	Year/Month 2020/01

KeyNo.	Part Number	Part Name	Quantity	Other
1	TA00038269A	JOINT	1	
2	22242-000200	SNAP RING, SHAFT (Φ 20)	1	
3	CT85150000A4	Bearing #6305	1	
4	TA00041006A	SHAFT, PTO DRIVE	1	
5	22252-000620	RING, CIRCLIP (Φ 62)	1	
6	27260-620000	SEALING CAP	1	
7	24101-062074	BALL BEARING (#6207)	2	
8	TA00039162C	BUSH	1	
9	TA00041007A	GEAR, PTO1	1	
10	TZ45100000A3	HUB,P.T.O	1	
11	TZ45110000C		1	
12	TA00040193C	SLEEVE	1	
13	TA00041008A	GEAR, PTO2	1	
14	FGG8040000B	WASHER	1	
15	22242-000400	SNAP RING, SHAFT (Φ 40)	1	
16	TA00038293D	SHAFT, PTO	1	
17	TT62040000A3	PTO OIL SEAL QLF35X60X19	1	
18	24341-000700	O-RING, FIX (Φ70)	1	
19	TA00038449B	COVER	1	
20	22242-000350	SNAP RING, SHAFT (Φ 35)	1	
21	26106-100202	HEX BOLT, (10-20)	4	
22	24101-063050	DEEP GROOVE BALL BEARING	1	

FIG C063B-2 4015R	63. PTO DRIVE SHAFT (2019.01)	Year/Month 2020/01

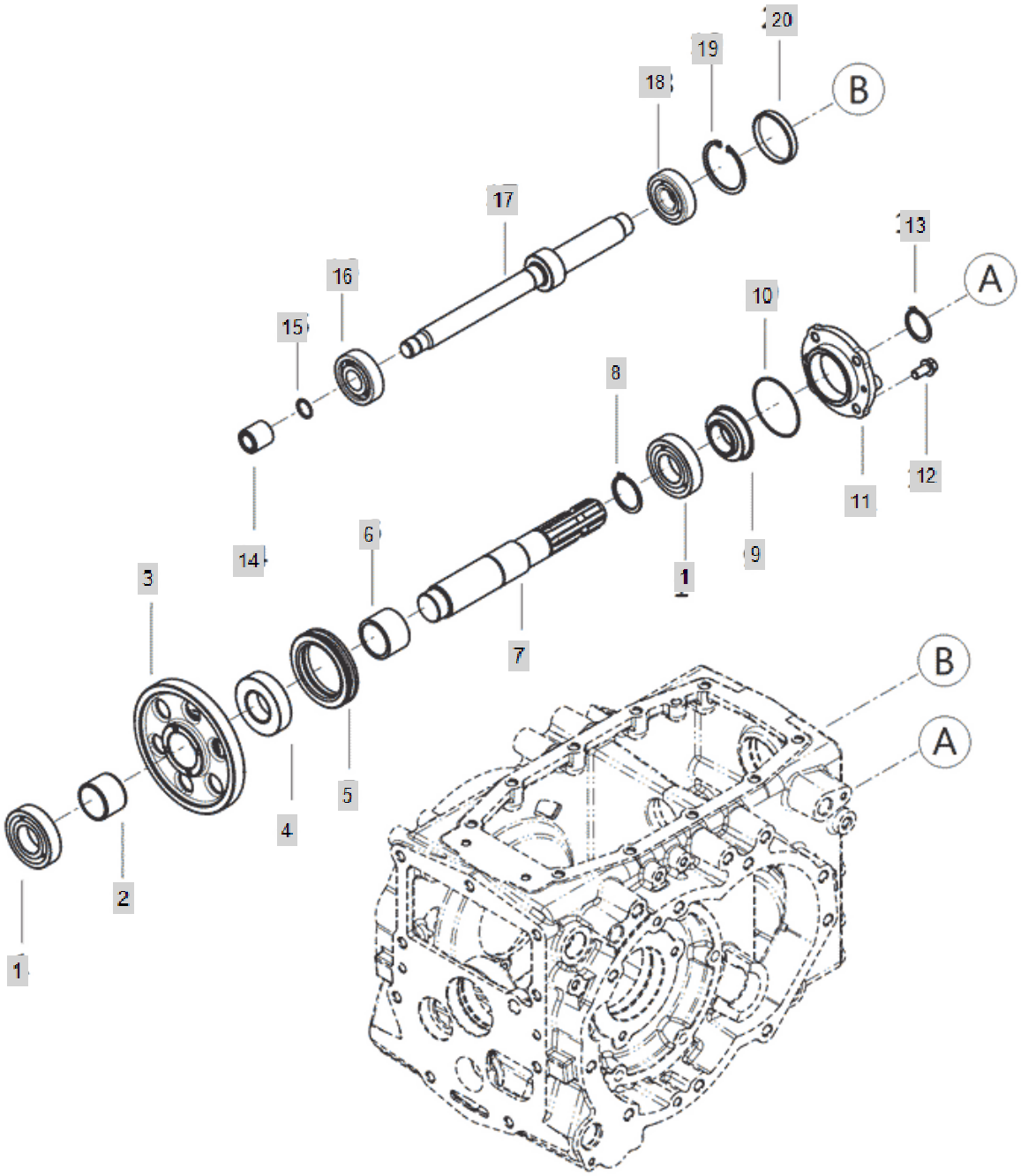

FIG C063B-2 4015R	63. PTO DRIVE SHAFT (2019.01)	Year/Month 2020/01

KeyNo.	Part Number	Part Name	Quantity	Other
1	24101-062074	BALL BEARING (#6207)	2	
2	TA00039162C	BUSH	1	
3	TA00041007A	GEAR, PTO1	1	
4	TZ45100000A3	HUB,P.T.O	1	
5	TZ45110000C4	SLEEVE,P.T.O	1	
6	TA00058019A	SPACER	1	
7	TA00038293D	SHAFT, PTO	1	
8	22242-000400	SNAP RING, SHAFT (Φ 40)	1	
9	TT62040000A3	PTO OIL SEAL QLF35X60X19	1	
10	24341-000700	O-RING, FIX (Φ70)	1	
11	TA00038449B	COVER	1	
12	26106-100202	HEX BOLT, (10-20)	4	
13	22242-000350	SNAP RING, SHAFT (Φ 35)	1	
14	TA00038269A	JOINT	1	
15	22242-000200	SNAP RING, SHAFT (Φ 20)	1	
16	CT85150000A4	Bearing #6305	1	
17	TA00058807A		1	
18	24101-063050	DEEP GROOVE BALL BEARING	1	
19	22252-000620	RING, CIRCLIP (Φ 62)	1	
20	27260-620000	SEALING CAP	1	

FIG C066-1 4015R	66. FORK, MAIN SHIFT	Year/Month 2020/01

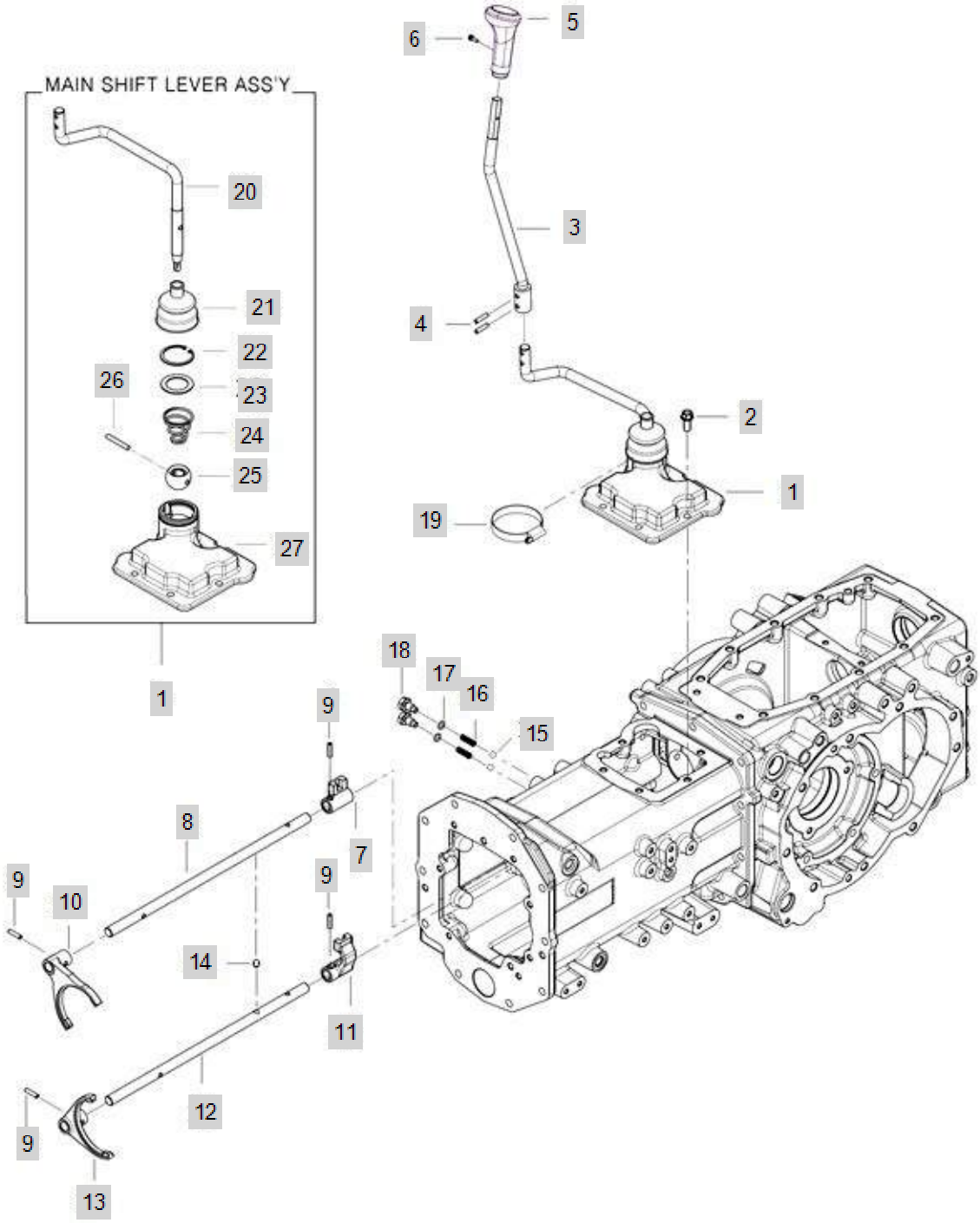

FIG C066-1 4015R	66. FORK, MAIN SHIFT	Year/Month 2020/01

KeyNo.	Part Number	Part Name	Quantity	Other
1	TA00038647E	MAIN SHIFT ASS`Y	1	
2	26106-100202	HEX BOLT, (10-20)	5	
3	TA00038798F	LEVER, MAIN SHIFT	1	
4	22351-060028	PIN, SPRING (6-28)	2	
5	TA00016326B	KNOB, MAIN SHIFT	1	
6	26023-040162	SCREW	1	
7	TA00038581B	ADAPTOR, MAIN SHIFT(1-2)	1	
8	TA00038579A	RAIL, MAIN SHIFT(1-2)	1	
9	22351-060025	PIN, SPRING (6-25)	4	
10	TA00038716A	FORK(1ST-2ND),MAIN SHIFT	1	
11	TA00038595B	MAIN SHIFTER	1	
12	TA00038580A	RAIL, MAIN SHIFT	1	
13	TA00038730A	FORK(3RD-4TH),MAIN SHIFT	1	
14	TA00038594A	PIN	1	
15	24190-110001	Ball, Steel (11/32)	2	
16	TA00038502A	SPRING	2	
17	24311-240100	SEAL, O-RING	2	
18	TA00038540A	BOLT, RAIL	2	
19	23000-070000	CLAMP,HOSE	1	
20	TA00038652E	MAIN SHIFT LEVER LOWER	1	
21	TA00017457A	BOOTS	1	
22	22252-000500	RING, CIRCLIP (Φ 50)	1	
23	TA00038639B	SPACER	1	
24	TA00038649A	SPRING	1	
25	FGG3140000C	BALL	1	
26	FGG3150000B	PIN	1	
27	TA00038655D	MAIN SHIFT CASE	1	

FIG C066-2 4015R	66. FORK, MAIN SHIFT	Year/Month 2020/01

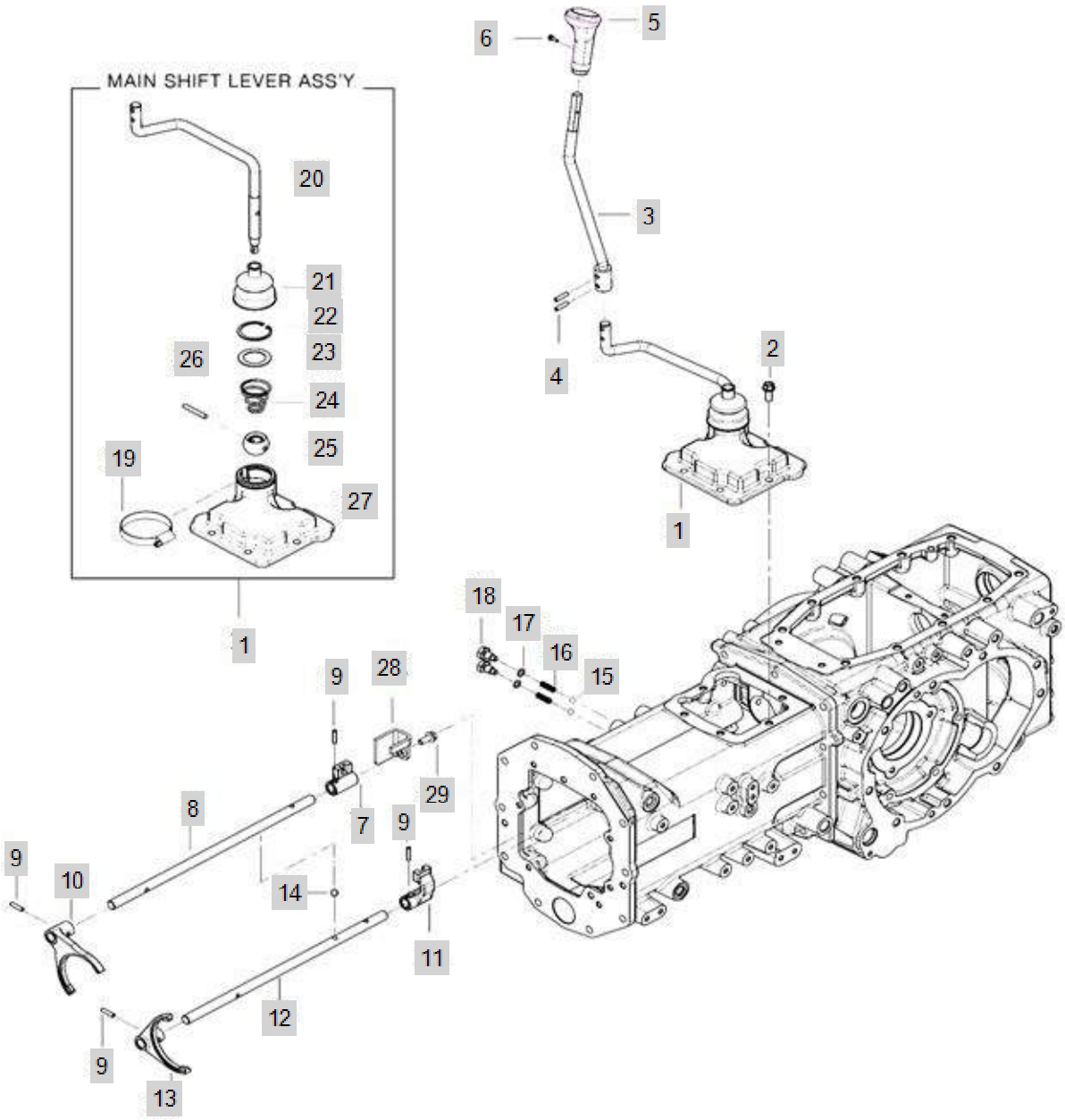

FIG C066-2 4015R	66. FORK, MAIN SHIFT	Year/Month 2020/01

KeyNo.	Part Number	Part Name	Quantity	Other
1	TA00038647E	MAIN SHIFT ASS`Y	1	
2	26106-100202	HEX BOLT, (10-20)	5	
3	TA00038798F	LEVER, MAIN SHIFT	1	
4	22351-060028	PIN, SPRING (6-28)	2	
5	TA00016326B	KNOB, MAIN SHIFT	1	
6	26023-040162	SCREW	1	
7	TA00038581B	ADAPTOR, MAIN SHIFT(1-2)	1	
8	TA00038579A	RAIL, MAIN SHIFT(1-2)	1	
9	22351-060025	PIN, SPRING (6-25)	4	
10	TA00038716A	FORK(1ST-2ND),MAIN SHIFT	1	
11	TA00038595B	MAIN SHIFTER	1	
12	TA00038580A	RAIL, MAIN SHIFT	1	
13	TA00038730A	FORK(3RD-4TH),MAIN SHIFT	1	
14	TA00038594A	PIN	1	
15	24190-110001	Ball, Steel (11/32)	2	
16	TA00038502A	SPRING	2	
17	24311-240100	SEAL, O-RING	2	
18	TA00038540A	BOLT, RAIL	2	
19	23000-070000	CLAMP,HOSE	1	
20	TA00038652E	MAIN SHIFT LEVER LOWER	1	
21	TA00017457A	BOOTS	1	
22	22252-000500	RING, CIRCLIP (Φ 50)	1	
23	TA00038639B	SPACER	1	
24	TA00038649A	SPRING	1	
25	FGG3140000C	BALL	1	
26	FGG3150000B	PIN	1	
27	TA00038655D	MAIN SHIFT CASE	1	
28	TA00051011A	HOLDER, MAIN SHIFTER	1	
29	26106-080252	SCREW,HEXFLANGEHEADCAP	1	

FIG C066-3 4015R	66. FORK, MAIN SHIFT	Year/Month 2020/01

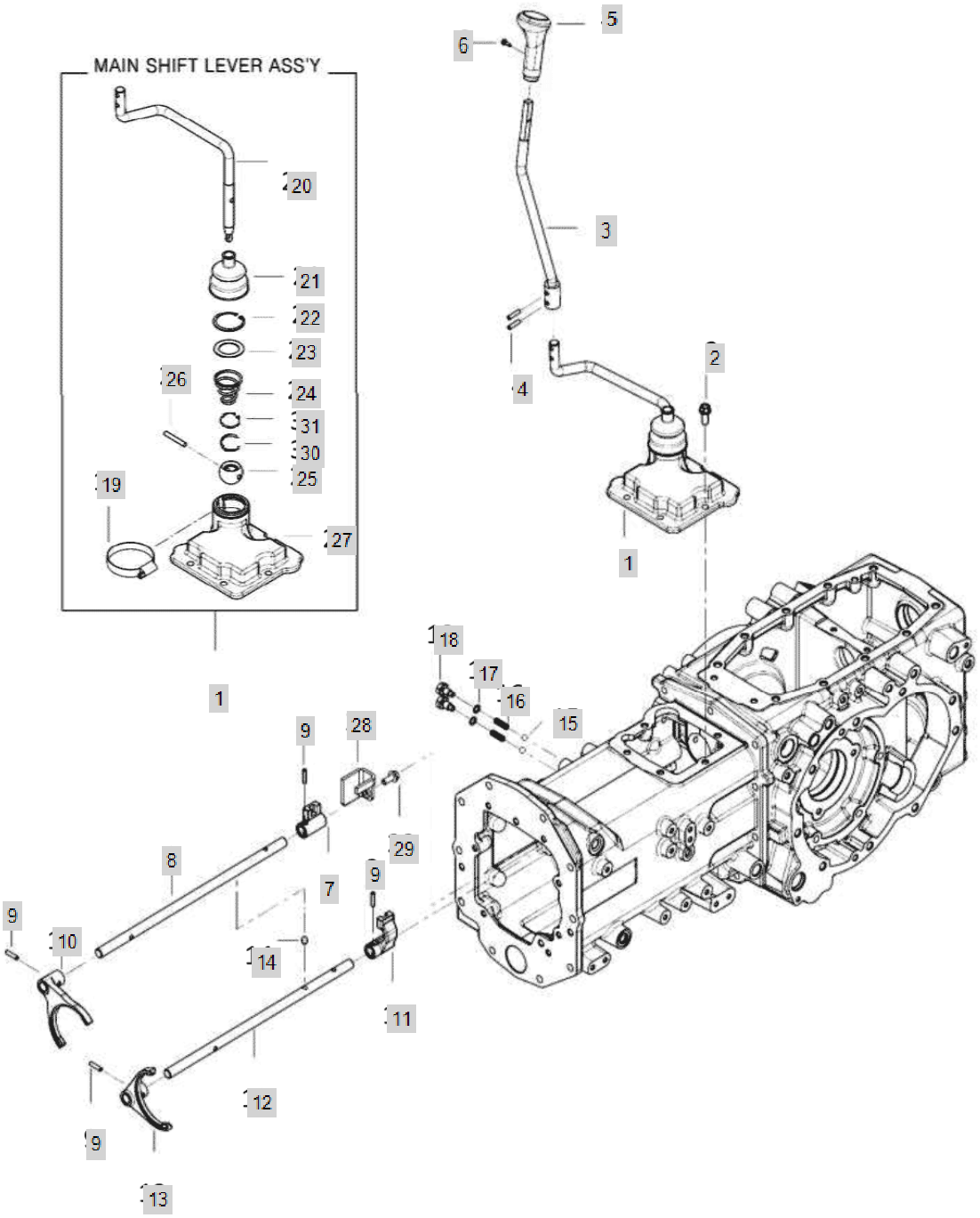

FIG C066-3 4015R	66. FORK, MAIN SHIFT	Year/Month 2020/01

KeyNo.	Part Number	Part Name	Quantity	Other
1	TA00038647E	MAIN SHIFT ASS`Y	1	
2	26106-100202	HEX BOLT, (10-20)	5	
3	TA00038798F	LEVER, MAIN SHIFT	1	
4	22351-060028	PIN, SPRING (6-28)	2	
5	TA00016326B	KNOB, MAIN SHIFT	1	
6	26023-040162	SCREW	1	
7	TA00038581B	ADAPTOR, MAIN SHIFT(1-2)	1	
8	TA00038579A	RAIL, MAIN SHIFT(1-2)	1	
9	22351-060025	PIN, SPRING (6-25)	4	
10	TA00038716A	FORK(1ST-2ND),MAIN SHIFT	1	
11	TA00038595B	MAIN SHIFTER	1	
12	TA00038580A	RAIL, MAIN SHIFT	1	
13	TA00038730A	FORK(3RD-4TH),MAIN SHIFT	1	
14	TA00038594A	PIN	1	
15	24190-110001	Ball, Steel (11/32)	2	
16	TA00038502A	SPRING	2	
17	24311-240100	SEAL, O-RING	2	
18	TA00038540A	BOLT, RAIL	2	
19	23000-070000	CLAMP,HOSE	1	
20	TA00038652E	MAIN SHIFT LEVER LOWER	1	
21	TA00017457A	BOOTS	1	
22	22252-000500	RING, CIRCLIP (Φ 50)	1	
23	TA00038639B	SPACER	1	
24	TA00038649A	SPRING	1	
25	FGG3140000C	BALL	1	
26	FGG3150000B	PIN	1	
27	TA00038655D	MAIN SHIFT CASE	1	
28	TA00051011A	HOLDER, MAIN SHIFTER	1	
29	26106-080252	SCREW,HEXFLANGEHEADCAP	1	
30	TA00001246A	WIRE SNAP RING	1	
31	22252-000400	RING, CIRCLIP (Φ 40)	1	

FIG C068 4015R	68. LEVER ASS'Y, RANGE SHIFT	Year/Month 2020/01

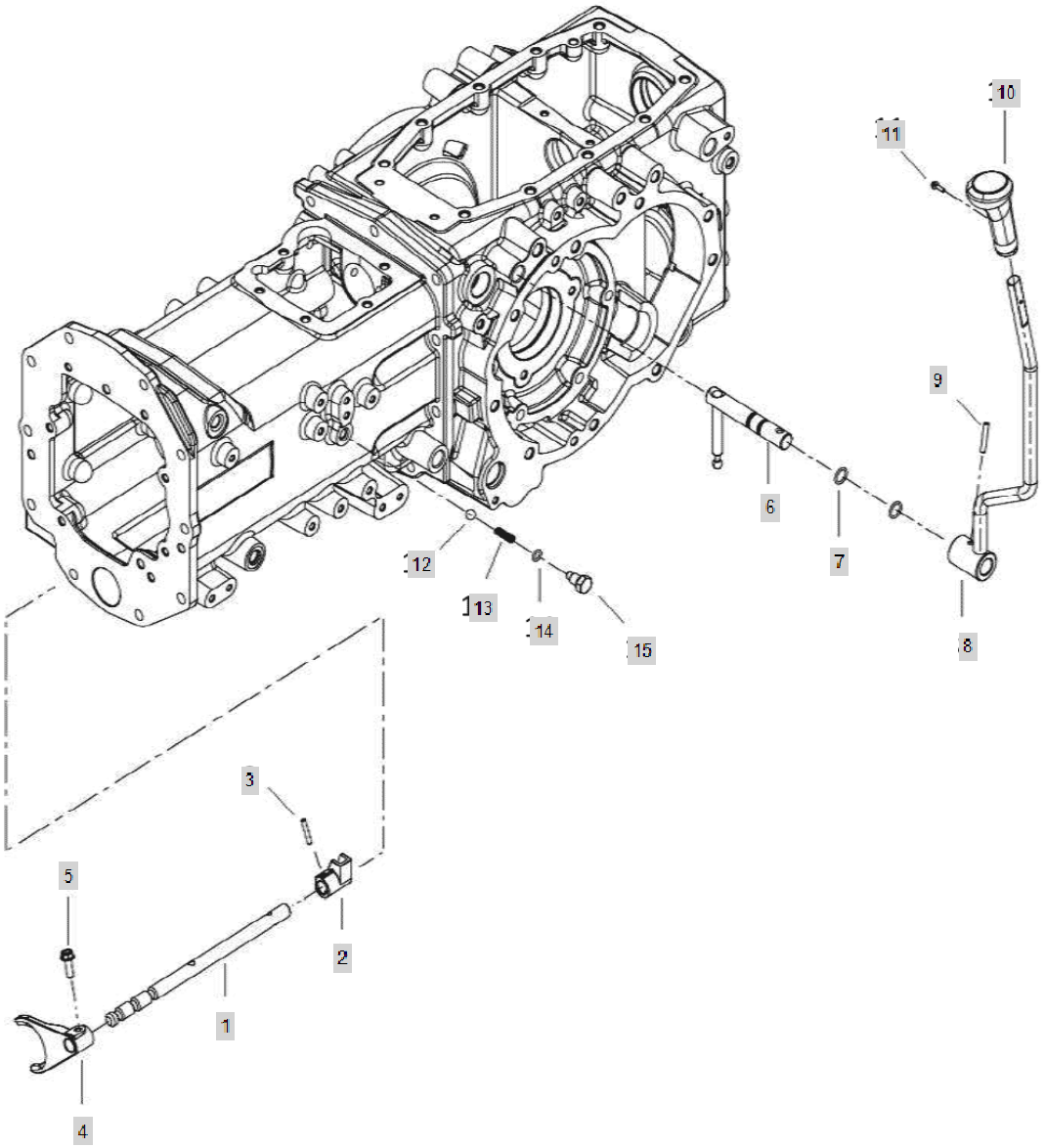

FIG C068 4015R	68. LEVER ASS'Y, RANGE SHIFT	Year/Month 2020/01

KeyNo.	Part Number	Part Name	Quantity	Other
1	TA00038541C	RAIL, RANGE	1	
2	TA00038542C	ADAPTOR, RANGE	1	
3	22351-060025	PIN, SPRING (6-25)	2	
4	TA00038735B	FORK, RANGE SHIFT	1	
5	26013-080302	HEX BOLT W/WASHER	1	
6	TA00038546D	SHIFT	1	
7	24311-000160	O-RING, DYNAMIC (Φ16)	2	
8	TA00038640D	LEVER, RANGE SHIFT	1	
9	TA00059644A	COIL SPRING PIS	1	
9-1	22351-060036	PIN, SPRING (6-36)	1	DELETE
10	TA00040350A	KNOB, RANGE SHIFT(K3)	1	
11	26023-040162	SCREW	1	
12	24190-110001	Ball, Steel (11/32)	1	
13	TA00038502A	SPRING	1	
14	24311-240100	SEAL, O-RING	1	
15	TA00038540A	BOLT, RAIL	1	

FIG C072A 4015R	72. FORNT DRIVE SHAFT	Year/Month 2020/01

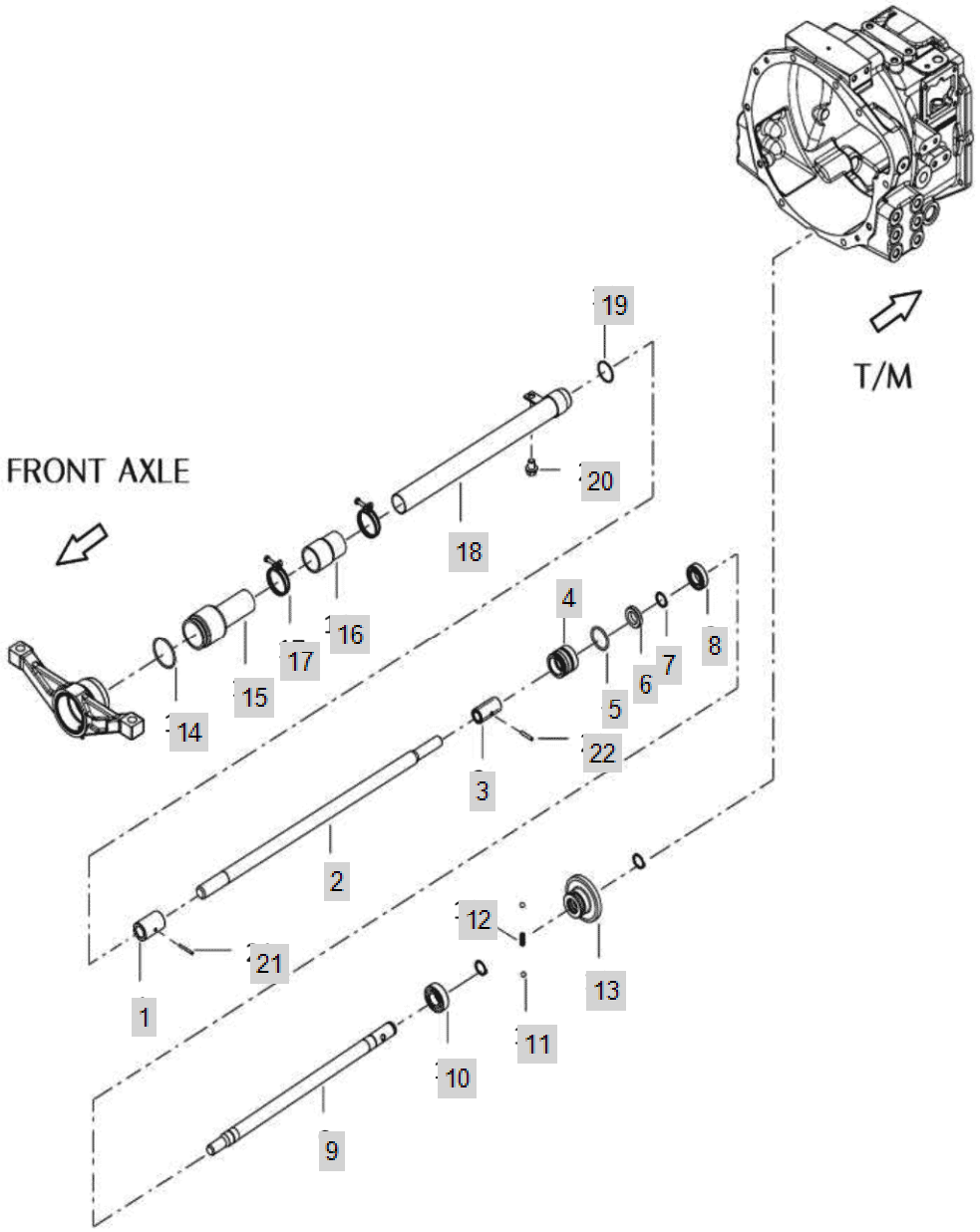

FIG C072A 4015R	72. FORNT DRIVE SHAFT	Year/Month 2020/01

KeyNo.	Part Number	Part Name	Quantity	Other
1	NT15080000B	COUPLING R	1	
2	TA00038621C	PROPELLER SHAFT	1	
3	TA00038620B	4WD JOINT	1	
4	TA00038089A	HOUSING, OIL SEAL	1	
5	24311-000410	O-RING	1	
6	24421-254008	Seal, Oil (#25-40-08)	1	
7	22242-000250	SNAP RING, SHAFT (Φ 25)	3	
8	24101-060050	DEEP GROOVE BALL BEARING	1	
9	TA00038094B	SHAFT 4WD DRV	1	
10	24101-062054	Bearing, Ball (#6205)	1	
11	24190-110001	Ball, Steel (11/32)	2	
12	TA00038591A	SPRING	1	
13	TA00038090D	GEAR 4WD DRVN	1	
14	24321-000550	SEAL,O-RING	1	
15	TA00040522A	COVER	1	
16	TA00040524B	BOOTS	1	
17	23000-048000	CLAMP,HOSE	2	
17-1	23010-050000	HOSEBAND50	2	
18	TA00040523C	COVER	1	
19	24341-000380	O-RING	1	
20	26106-120162	BOLT	1	
21	22351-040036	SPRING PIN	1	
22	22351-050030	PIN, SPRING (5-03)	1	

FIG C073 4015R	73. 4WD LEVER	Year/Month 2020/01

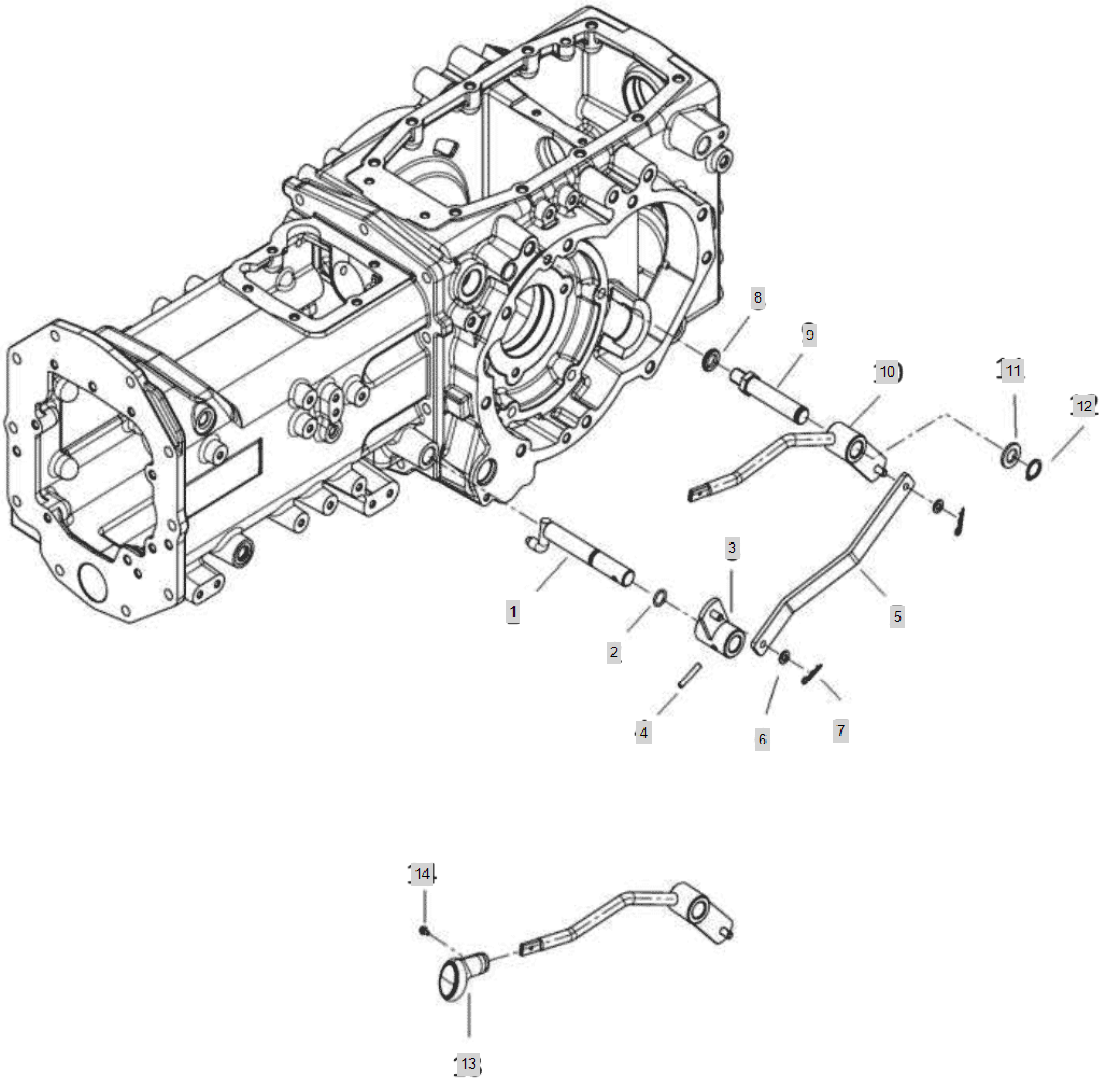

FIG C073 4015R	73. 4WD LEVER	Year/Month 2020/01

KeyNo.	Part Number	Part Name	Quantity	Other
1	TA00038504G	4WD LEVER	1	
2	24311-000160	O-RING, DYNAMIC (Φ16)	1	
3	TA00038511A	PTO ARM	1	
4	22351-060036	PIN, SPRING (6-36)	1	
5	TA00038575B	4WD LEVER LINK	1	
6	22117-080000	WASHER, PLAIN (Φ 08)	2	
7	22360-080000	PIN , SNAP (8Φ)	2	
8	22217-160000	WASHER, SPRING (Φ 16)	1	
9	TA00038566B	PTO LEVER SHAFT	1	
10	TA00038570D	4WD LEVER	1	
11	22137-200000	WASHER , PLAIN	1	
12	22242-000200	SNAP RING, SHAFT (Φ 20)	1	
13	TA00015827A	KNOB, FRONT DRIVE LEVER	1	
14	26023-040102	SCREW W/WASHER	1	

FIG C074-1 4015R	74. FORK & LEVER, PTO	Year/Month 2020/01

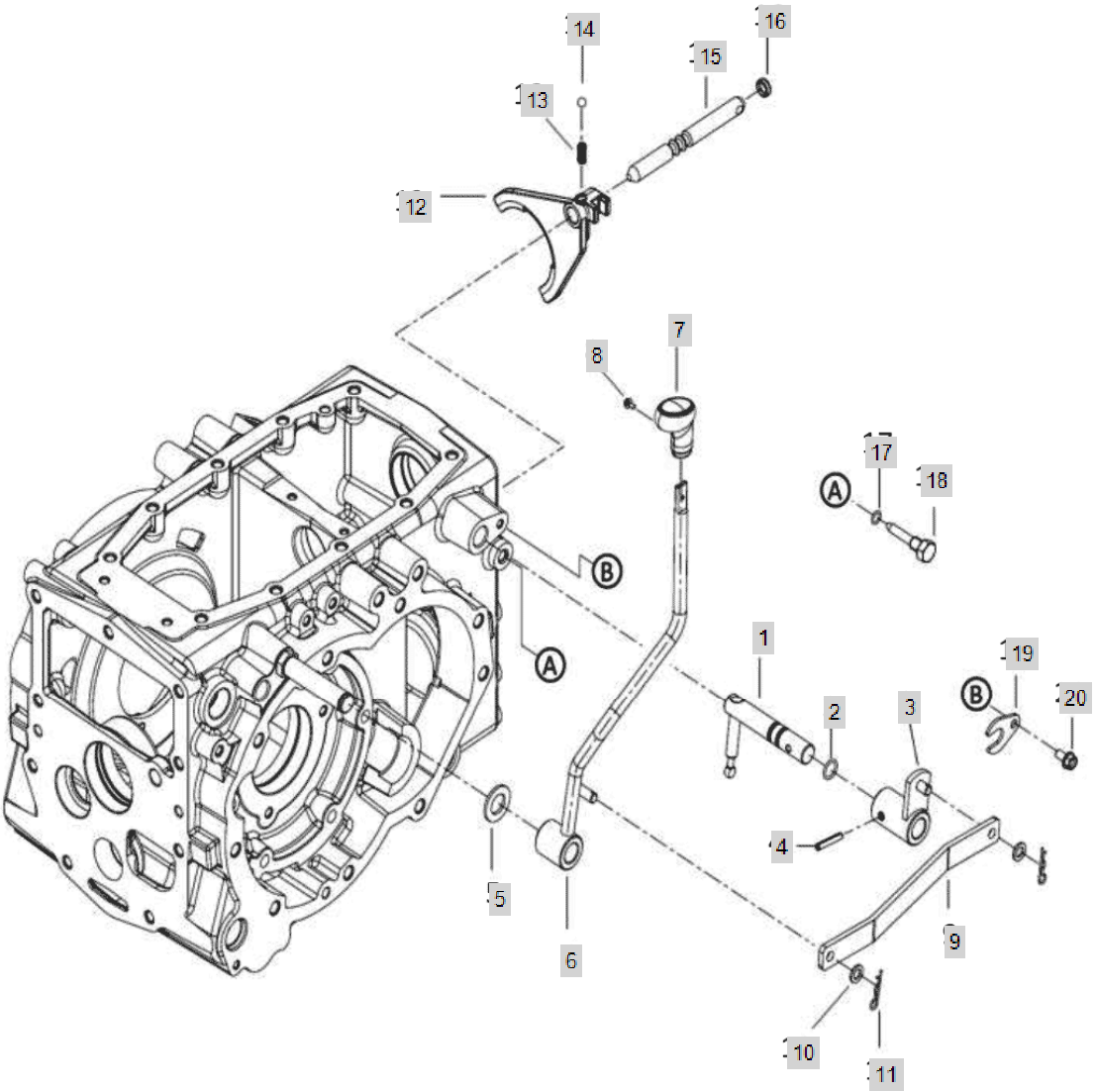

FIG C074-1 4015R	74. FORK & LEVER, PTO	Year/Month 2020/01

KeyNo.	Part Number	Part Name	Quantity	Other
1	TA00039129A	SHAFT,P.T.O SHIFT	1	
2	24311-000160	O-RING, DYNAMIC (Φ16)	1	
3	TA00039157C	ARM, PTO SHIFT	1	
4	22351-060036	PIN, SPRING (6-36)	1	
5	22137-200000	WASHER , PLAIN	1	
6	TA00039133B	LEVER,P.T.O SHIFT	1	
7	TA00015833A	KNOB, PTO SHIFT	1	
8	26023-040102	SCREW W/WASHER	1	
9	TA00039152B	LINK, PTO LEVER	1	
10	22117-100000	WASHER, PLAIN (Φ 10)	2	
11	22360-100000	PIN , SNAP (10Φ)	2	
12	TA00039228D	FORK,PTO	1	
13	TA00038502A	SPRING	1	
14	24190-110001	Ball, Steel (11/32)	1	
15	TA00039153A	FORK SHAFT, PTO	1	
16	27260-170000	cap	1	
17	24311-000100	O-RING, DYNAMIC (Φ10)	1	
18	TA00038565A	RAIL FIX BOLT	1	
19	FGF1400000B	PLATE	1	
20	26106-080162	SCREW,HEXFLANGEHEADCAP	1	

FIG C074B-2 4015R	74. FORK & LEVER, PTO(2019.01)	Year/Month 2020/01

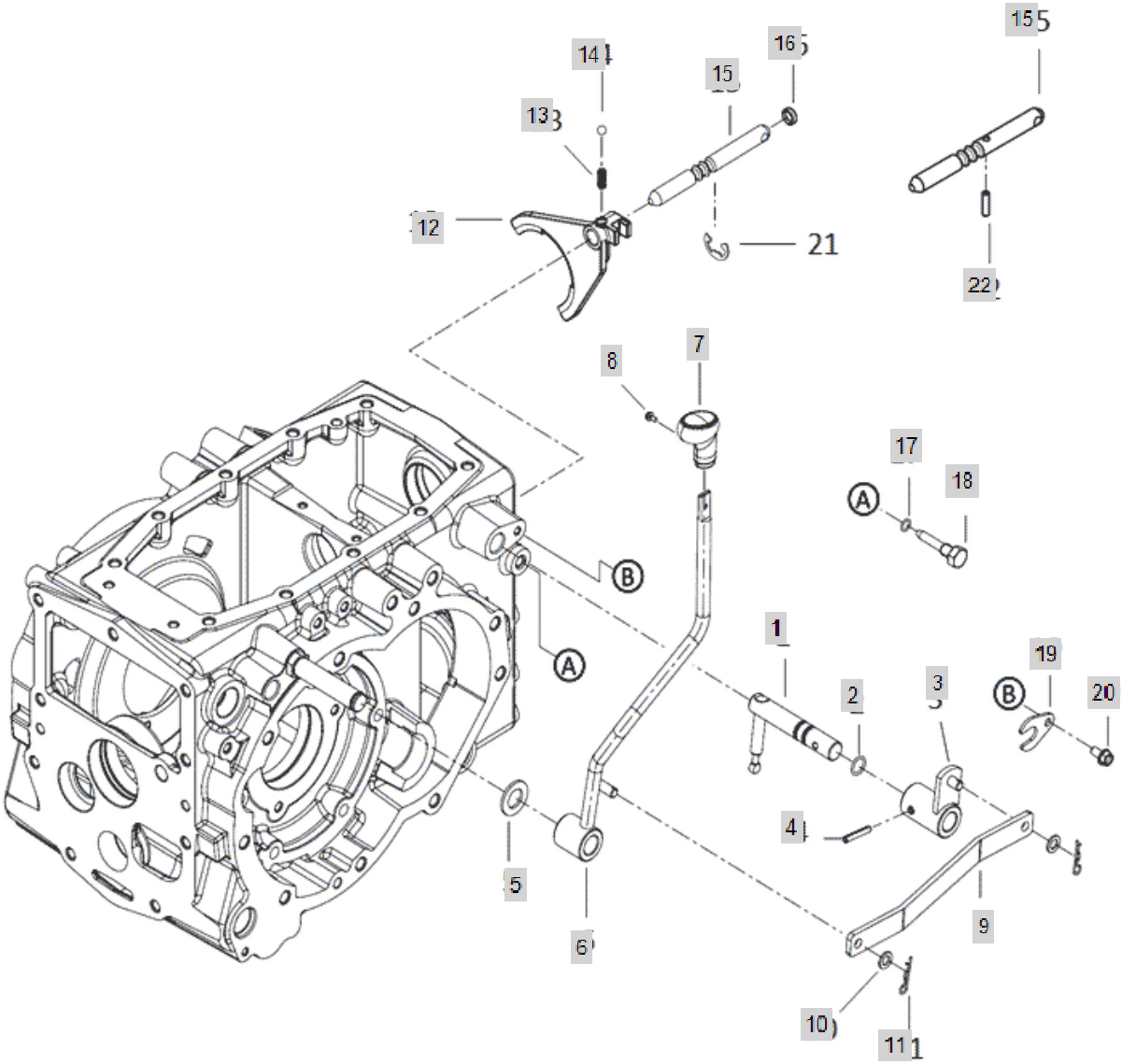

FIG C074B-2 4015R	74. FORK & LEVER, PTO(2019.01)	Year/Month 2020/01

KeyNo.	Part Number	Part Name	Quantity	Other
1	TA00039129A	SHAFT,P.T.O SHIFT	1	
2	24311-000160	O-RING, DYNAMIC (Φ16)	1	
3	TA00039157C	ARM, PTO SHIFT	1	
4	22351-060036	PIN, SPRING (6-36)	1	
5	22137-200000	WASHER , PLAIN	1	
6	TA00039133B	LEVER,P.T.O SHIFT	1	
7	TA00015833A	KNOB, PTO SHIFT	1	
8	26023-040102	SCREW W/WASHER	1	
9	TA00039152B	LINK, PTO LEVER	1	
10	22117-100000	WASHER, PLAIN (Φ 10)	2	
11	22360-100000	PIN , SNAP (10Φ)	2	
12	TA00039228D	FORK,PTO	1	
13	TA00038502A	SPRING	1	
14	24190-110001	Ball, Steel (11/32)	1	
15	TA00039153A	FORK SHAFT, PTO	1	
16	27260-170000	cap	1	
17	24311-000100	O-RING, DYNAMIC (Φ10)	1	
18	TA00038565A	RAIL FIX BOLT	1	
19	FGF1400000B	PLATE	1	
20	26106-080162	SCREW,HEXFLANGEHEADCAP	1	
22	22351-060025	PIN, SPRING (6-25)	1	

FIG C078 4015R	78. RING GEAR&DIFF.GEAR ASS'Y	Year/Month 2020/01

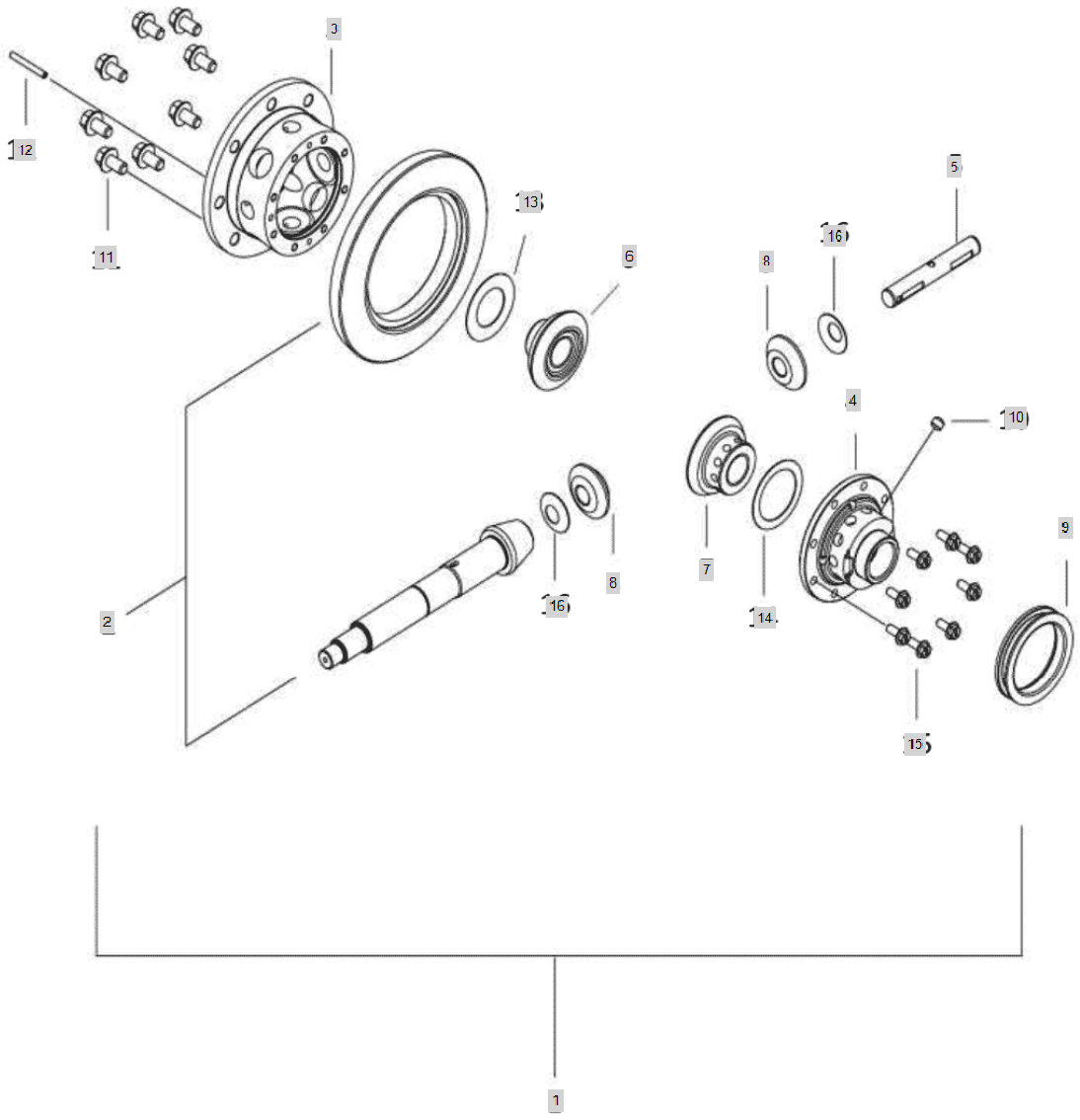

FIG C078 4015R	78. RING GEAR&DIFF.GEAR ASS'Y	Year/Month 2020/01

KeyNo.	Part Number	Part Name	Quantity	Other
1	TA00038522C	DIFFERENTIAL ASSY	1	
2	TA00038772C	RING GEAR ASSY	1	
3	TA00038523A	CASE R, DIFF	1	
4	TA00032118A	CASE LH, DIFF.	1	
5	TA00032091A	SHAFT, DIFFERENTIAL	1	
6	TA00032090A	SIDE GEAR R, DIFFERENTIAL	1	
7	TA00032089A	SIDE GEAR L, DIFFERENTIAL	1	
8	TA00032079A	PINION	2	
9	TA00038510A	SLIDER	1	
10	TA00038507A	ROLLER	10	
11	TA00038929A	BOLT	8	
12	22351-060050	PIN, SPRING (6-50)	1	
13	TA00032148A	THRUST WASHER	1	
14	TA00032149A	WASHER	1	
15	TA00038928A	BOLT	8	
16	TA00032092A	BRACKET	2	

FIG C079-1 4015R	79. DIFFERENTIAL	Year/Month 2020/01

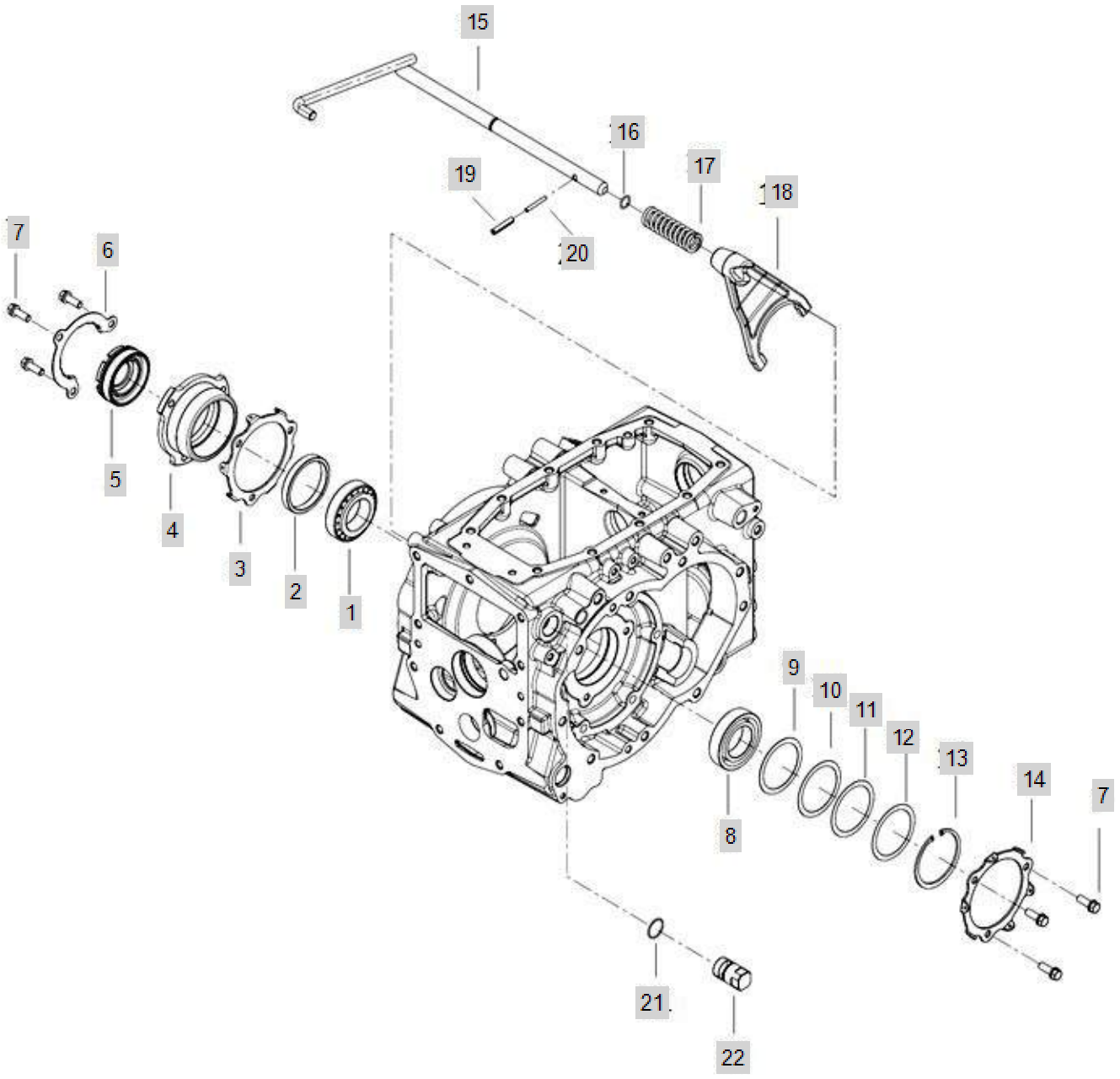

FIG C079-1 4015R	79. DIFFERENTIAL	Year/Month 2020/01

KeyNo.	Part Number	Part Name	Quantity	Other
1	FGH0220000A4	BEARING(32210J)	1	
2	TA00038525A	SPACER	1	
3	TA00038662B	SPRING HOLDER	1	
4	TA00038533A	SUPPORT	1	
5	TA00038537A	SCREW	1	
6	TA00038665B	FIX PLATE	1	
7	26013-100302	SCREW,CAPTIVEWASHERCAP	6	
8	24101-062104	BALL BEARING #6210 -> FGF4200000A4	1	
9	TA00038526A	SHIM(0.1T)	1	
10	TA00038527A	RANER(0.2T)	2	
11	TA00038528A	RANER(0.5T)	2	
12	TA00041806A	SEAM(1.0T)	1	
13	22252-000900	RING, CIRCLIP (Φ 90)	1	
14	TA00038662B	SPRING HOLDER	1	
15	TA00038822C	DIFFERENTIAL LOCK PEDAL	1	
16	24311-000160	O-RING, DYNAMIC (Φ16)	1	
17	TA00038543A	SPRING	1	
18	TA00038685D	DIFFERENTIAL FORK	1	
19	22351-050040	PIN, SPRING (5-04)	1	
20	22351-080040	PIN, SPRING (8-40)	1	
21	24341-000280	O-RING, FIX (Φ28)	1	
22	TA00038529A	ADAPTER	1	

FIG C079-2 4015R	79. DIFFERENTIAL	Year/Month 2020/01

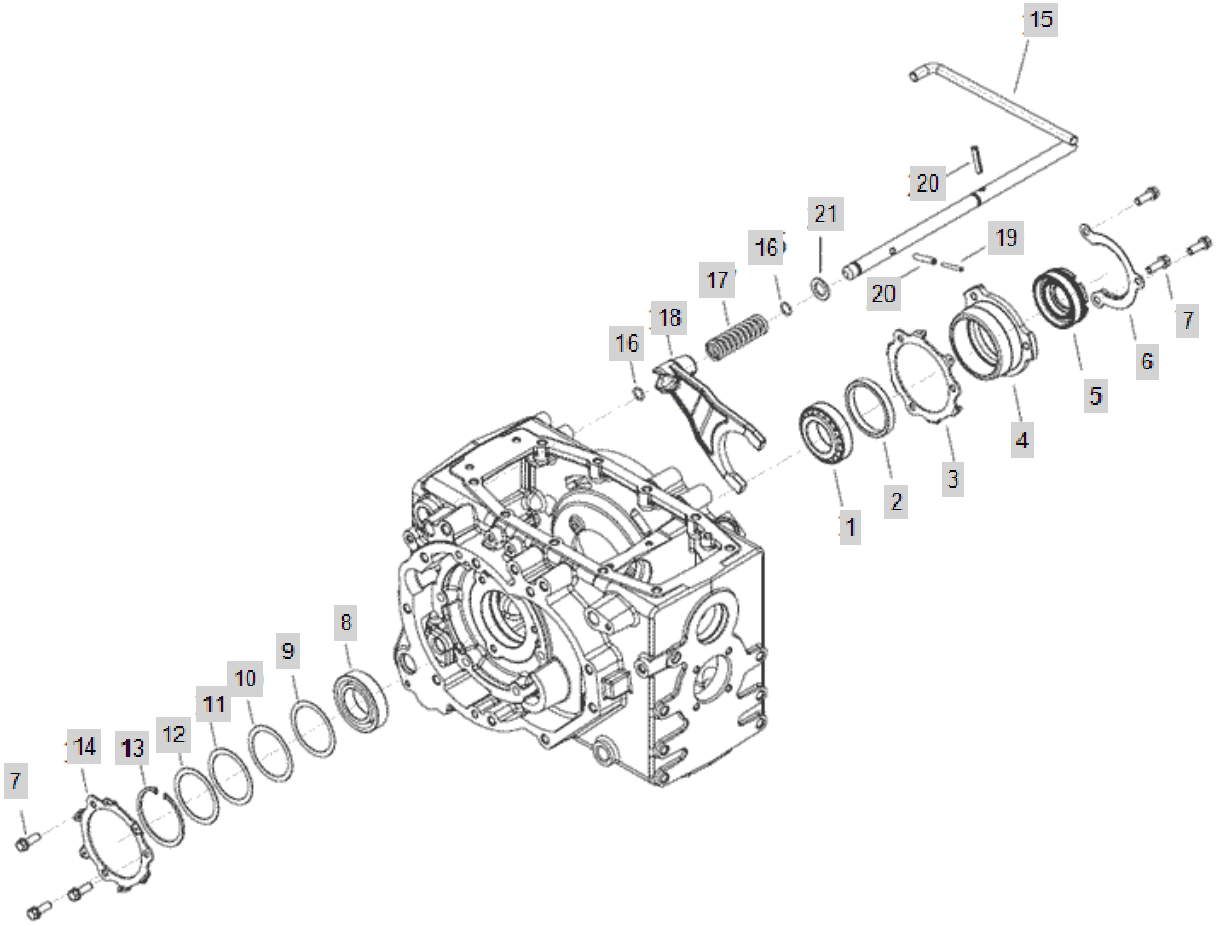

FIG C079-2 4015R	79. DIFFERENTIAL	Year/Month 2020/01

KeyNo.	Part Number	Part Name	Quantity	Other
1	FGH0220000A4	BEARING(32210J)	1	
2	TA00038525A	SPACER	1	
3	TA00038662B	SPRING HOLDER	1	
4	TA00038533A	SUPPORT	1	
5	TA00038537A	SCREW	1	
6	TA00038665B	FIX PLATE	1	
7	26013-100302	SCREW,CAPTIVEWASHERCAP	6	
8	24101-062104	BALL BEARING #6210 -> FGF4200000A4	1	
9	TA00038526A	SHIM(0.1T)	1	
10	TA00038527A	RANER(0.2T)	1	
11	TA00038528A	RANER(0.5T)	1	
12	TA00041806A	SEAM(1.0T)	1	
13	22252-000900	RING, CIRCLIP (Φ 90)	1	
14	TA00038662B	SPRING HOLDER	1	
15	TA00038822C	DIFFERENTIAL LOCK PEDAL	1	
16	24311-000160	O-RING, DYNAMIC (Φ16)	2	
17	TA00038543A	SPRING	1	
18	TA00038685D	DIFFERENTIAL FORK	1	
19	22351-050040	PIN, SPRING (5-04)	1	
20	22351-080040	PIN, SPRING (8-40)	2	
21	22117-200000	WASHER	1	

FIG C082 4015R	82. DRIVING PART, REAR AXLE	Year/Month 2020/01

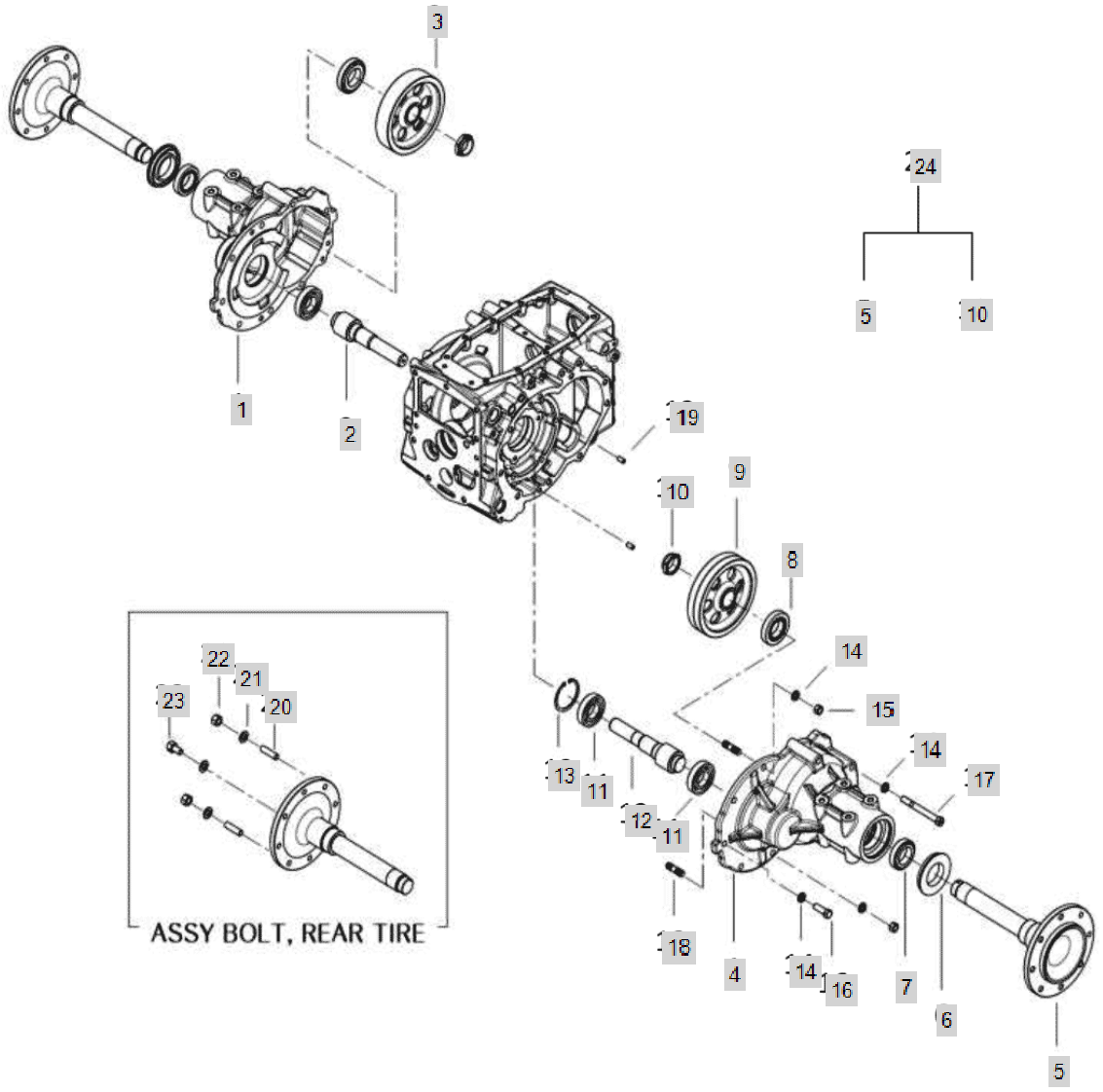

FIG C082 4015R	82. DRIVING PART, REAR AXLE	Year/Month 2020/01

KeyNo.	Part Number	Part Name	Quantity	Other
1	TA00038690E	REAR AXLE HOUSING R	1	
2	TA00038395C	FINAL_REAR_PINION(R)	1	
3	TA00038393B	FINAL_REAR_GEAR (R)	1	
4	TA00038689E	REAR AXLE HOUSING L	1	
5	TA00038361D	REAR AXLE SHAFT	2	
6	TA00033423A	SEAL, OIL (REAR AXLE)	2	
7	24141-320090	TAPER ROLLER BEARING	2	
8	24141-302090	BEARING	2	
9	TA00038359B	FINAL RING GEAR	1	
10	TA00038354A	LOCK NUT	2	
11	TT21040000A4	BEARING	4	
12	TA00038394C	FINAL_REAR_PINION(L)	1	
13	22252-000800	RING, CIRCLIP (Φ 80)	2	
14	22217-140000	WASHER, SPRING (Φ 14)	18	
15	26716-140002	NUT	4	
16	FT08110000A4	BOLT(M14X42)	6	
17	TA00038428B	BOLT	8	
18	FB80120000A4	STUD BOLT(M14X38)	4	
19	22312-100180	PIN, DOWEL (10-18)	4	
20	TT85150000A4	Bolt	4	
21	TB29430000A4	WASHER	16	
22	TB29420000A4	NUT M14	4	
23	TB29440000A4	BOLTM14X35	12	
24	TA00047839A	REAR AXLE ASSY	2	

FIG C083 4015R	83. BRAKE	Year/Month 2020/01

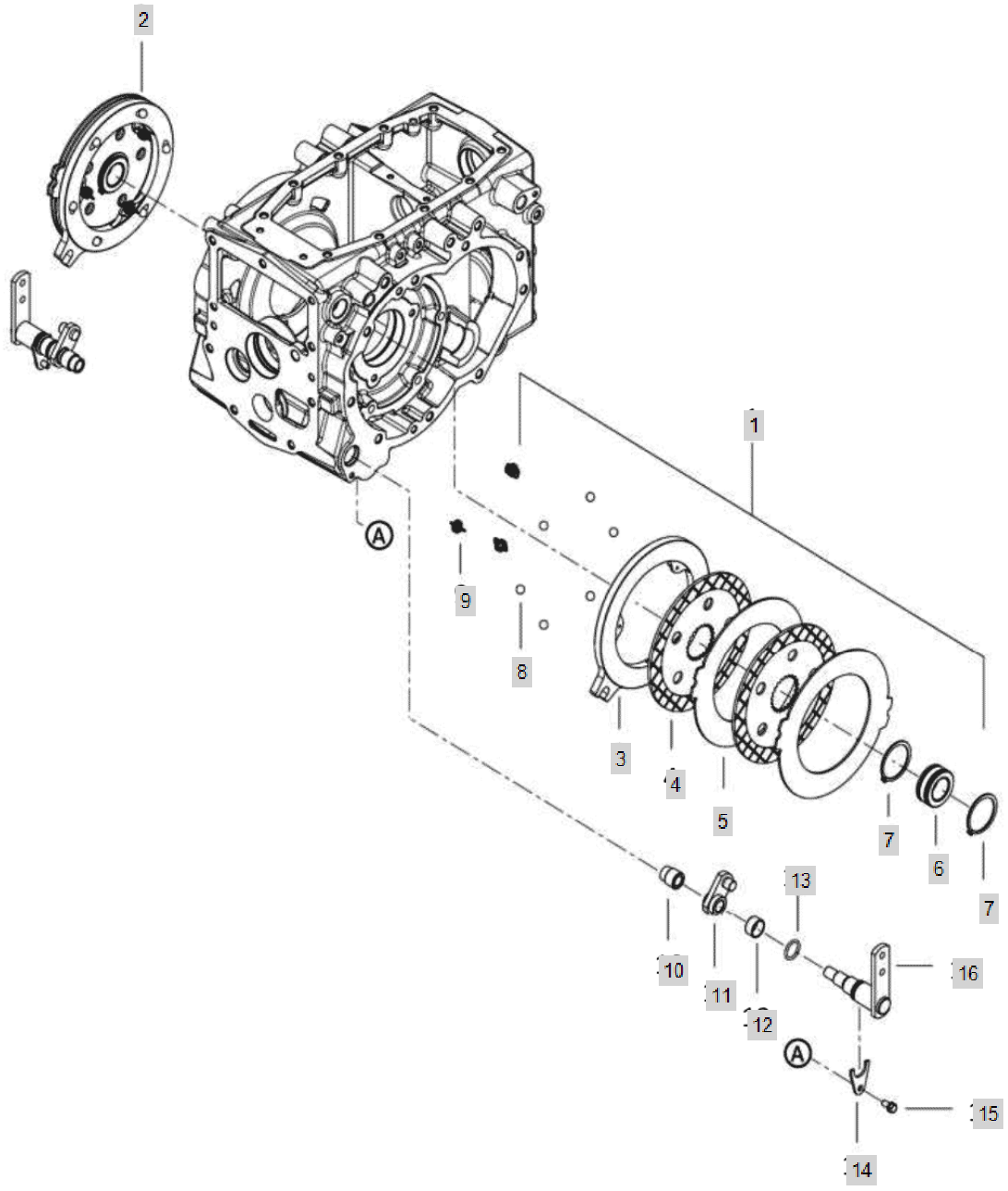

FIG C083 4015R	83. BRAKE	Year/Month 2020/01

KeyNo.	Part Number	Part Name	Quantity	Other
1	TA00038592B	BRAKE ASS`Y (LH)	1	
2	TA00038593B	BRAKE ASS`Y (RH)	1	
3	TA00038520A	CAM PLATE (LH)	1	
3-1	TA00038521A	CAM PLATE (RH)	1	
4	TA00038495B	DISK	4	
5	TA00038493A	PRESSURE PLATE	4	
6	TA00038494A	BOSS	2	
7	22242-000580	SNAP RING	4	
8	24190-160001	BALL,STEEL	12	
9	TN50070000A4	SPRING	6	
10	TA00038463C	BRAKE LEVER BUSHING	2	
11	TA00038466C	BRAKE INNER ARM	2	
12	24550-025150	BUSH 25X15	2	
13	24311-000250	O-RING, DYNAMIC (Φ25)	2	
14	TA00038470A	PLATE	2	
15	26013-080182	SCREW,CAPTIVEWASHERCAP	2	
16	TA00038474E	BRAKE LEVER	2	

FIG C090 4015R	90. BRAKE PEDAL	Year/Month 2020/01

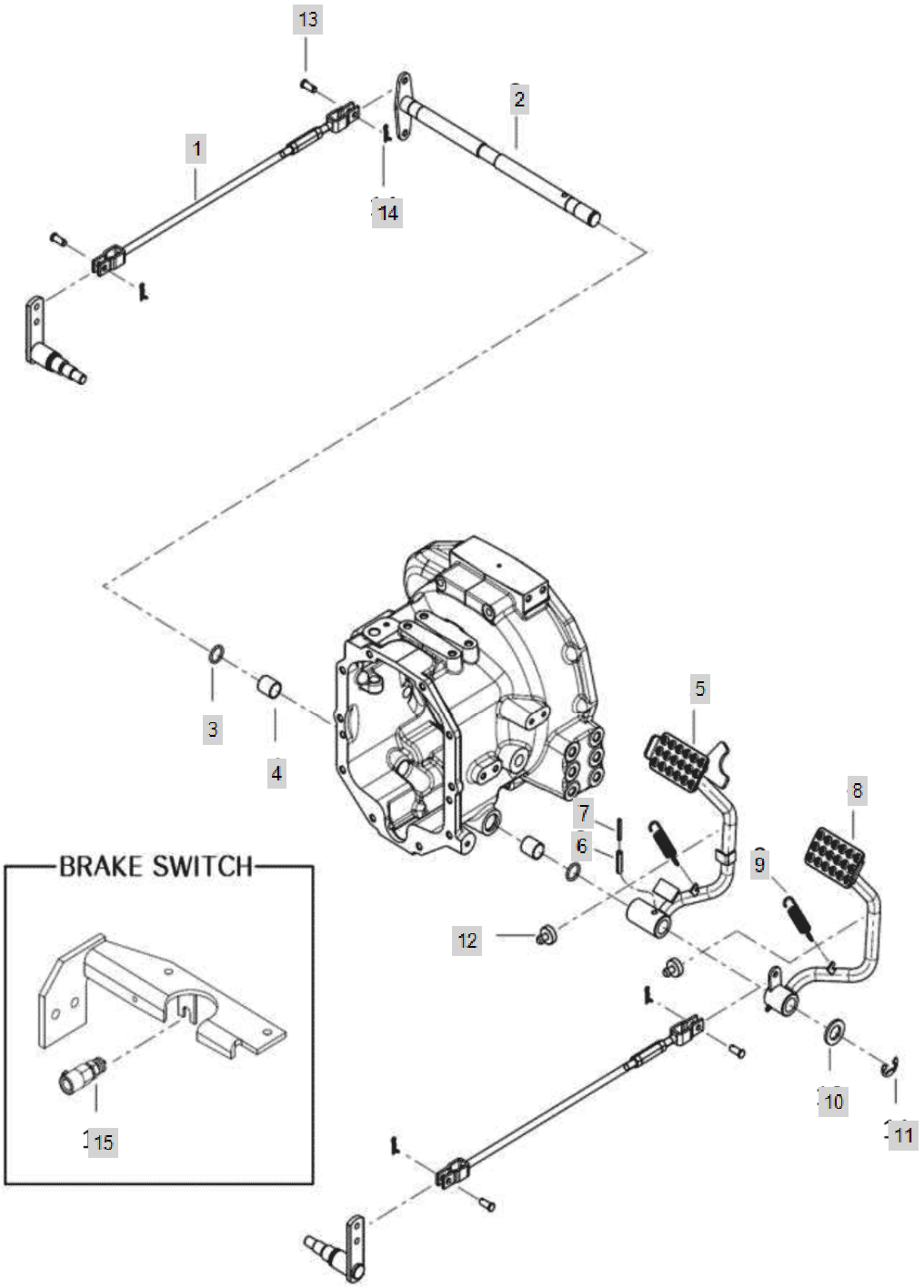

FIG C090 4015R	90. BRAKE PEDAL	Year/Month 2020/01

KeyNo.	Part Number	Part Name	Quantity	Other
1	TA00038925A	ROD ASSY	2	
2	TA00038975C	SHAFT, PEDAL ROD	1	
3	24311-000250	O-RING, DYNAMIC (Φ25)	2	
4	24550-025300	DRY BUSH	2	
5	TA00038959D	PEDAL(L), BRAKE	1	
6	22351-080040	PIN, SPRING (8-40)	1	
7	22351-050040	PIN, SPRING (5-04)	1	
8	TA00038960B	PEDAL(R), BRAKE	1	DELETE
9	TC73090000A4	RETURN SPRING	2	
10	22137-240000	WASHER, PLAIN (Φ 24)	1	
11	22272-000190	RING, CIRCLIP (Φ 19)	1	
12	TA00016153A	RUBBER STOPER	2	
13	22487-100200	PIN, HEAD (10-20)	4	
14	RR51230000C	SNAP PIN	4	
15	TZC5110000A3	STOPLAMPSWITCH	1	

FIG C091 4015R	91. PARKING BRAKE	Year/Month 2020/01

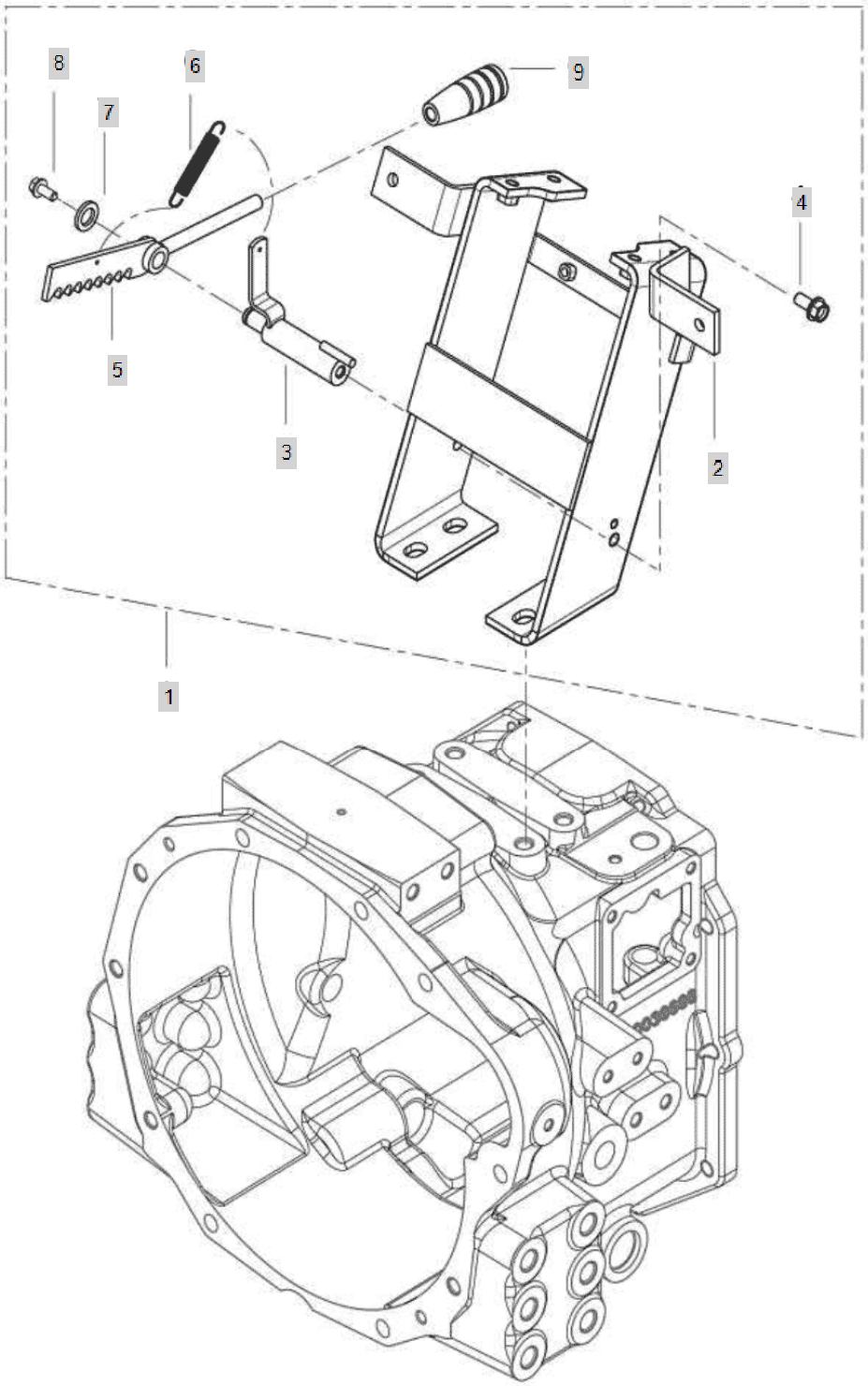

FIG C091 4015R	91. PARKING BRAKE	Year/Month 2020/01

KeyNo.	Part Number	Part Name	Quantity	Other
1	TA00044392A	STEERING ASSY	1	
2	TA00039159G	SUPPROT, STEERING	1	
3	TA00043146A	SHAFT ASSY	1	
4	26106-080182	SCREW,HEXFLANGEHEADCAP	1	
5	TA00043102A	LEVER, PARKING BRAKE	1	
6	TT98200000A4	RETURNSPRING	1	
7	22151-060000		1	
7-1	22117-120000	WASHER, PLAIN (Φ 12)	1	
8	26106-060122	HEX BOLT (6-12)	1	
8-1	22272-000100	RING, CIRCLIP (Φ 10)	1	
9	VD05460000A4	LEVER(BLACK)	1	

FIG C092A 4015R	92. HYD PUMP	Year/Month 2020/01

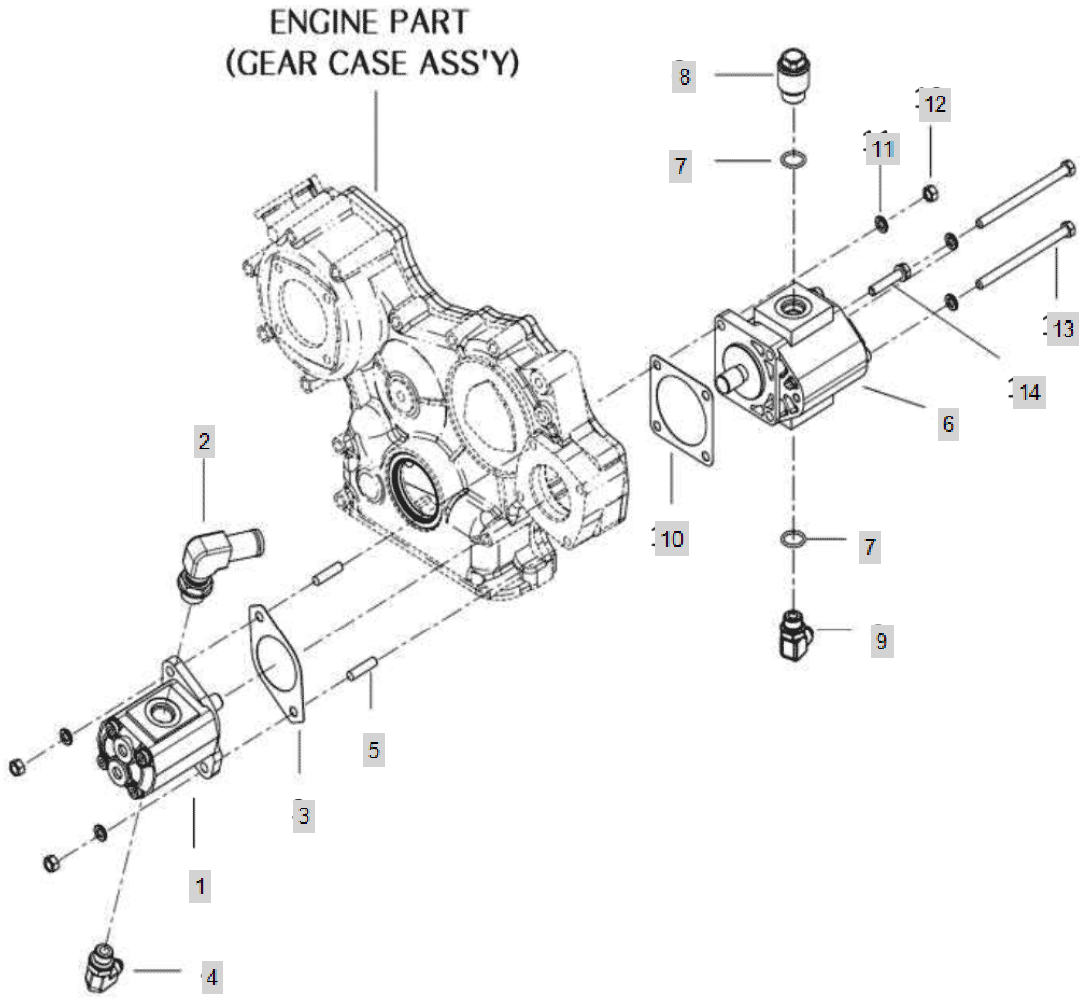

FIG C092A 4015R	92. HYD PUMP	Year/Month 2020/01

KeyNo.	Part Number	Part Name	Quantity	Other
1	TA00039797A	HYD PUMP	1	
2	TRC9140000A3	ELBOW	1	
3	TZG1700000A4	PACKING	1	
4	NT34620000A4	ELBOW	1	
5	26216-080222	Bolt, Stud (8-22)	2	
6	TA00001404A	HYD PUMP 13CC	1	
7	24311-000180	O-RING, DYNAMIC (Φ18)	2	
8	TCC9040000A4	JOINT M22	1	
9	TA00039579A	ELBOW	1	
10	HH02080000A4	PACKING,HYD.PUMP	1	
11	22217-080000	WASHER, SPRING (Φ 08)	5	
12	26716-080002	NUT,HEX (D8)	3	
13	26116-081152	HEX BOLT	2	
14	26013-080402	Bolt, Hexa (8-40)	1	

FIG C101-1 4015R	101. CASE, HYD CYLINDER	Year/Month 2020/01

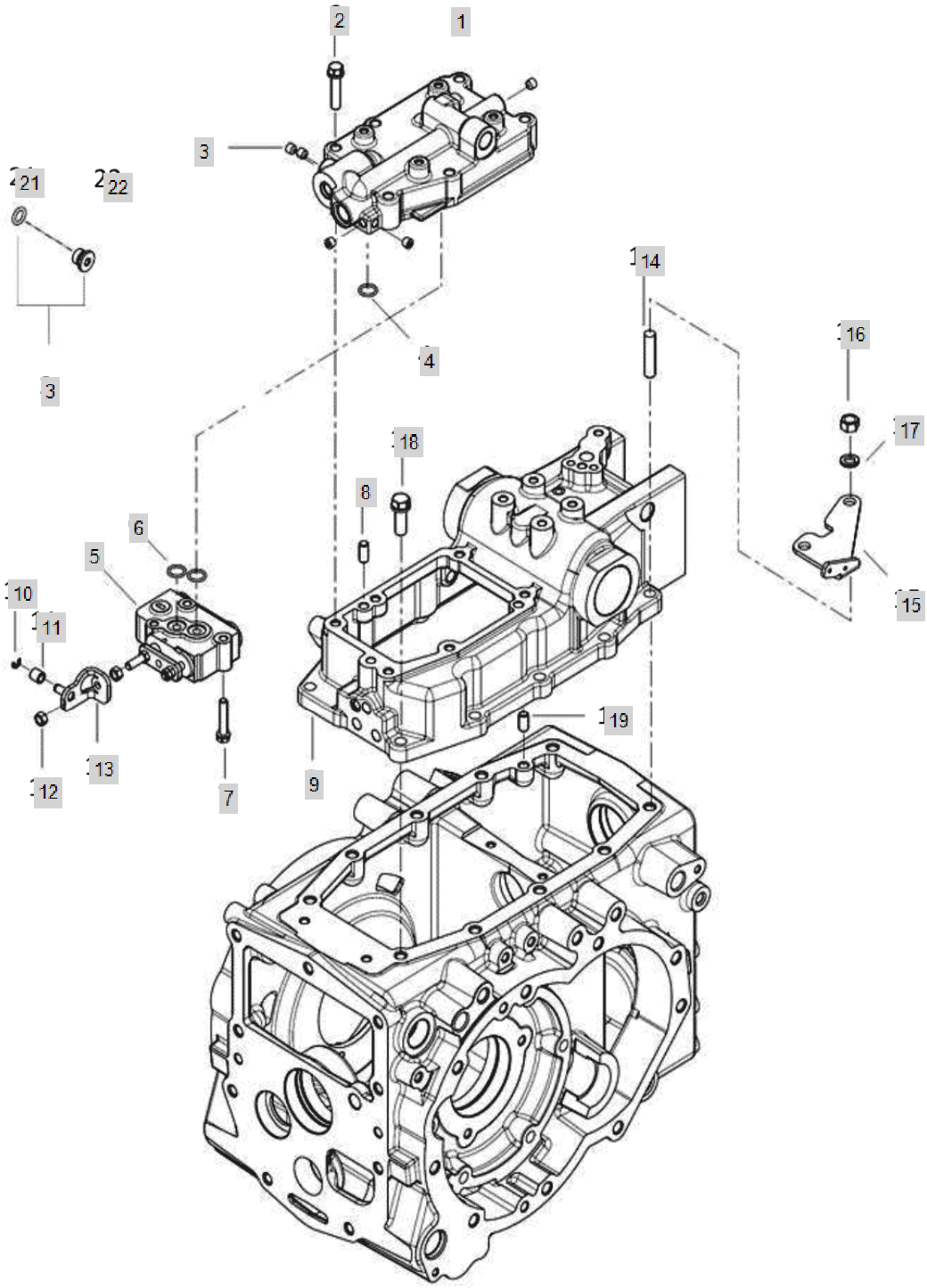

FIG C101-1 4015R	101. CASE, HYD CYLINDER	Year/Month 2020/01

KeyNo.	Part Number	Part Name	Quantity	Other
1	TA00033096G	COVER, HYD CYLINDER	1	
2	26013-100452	HEX BOLT W/WASHER	6	
3	TA00045690A	PLUG ASS'Y	5	
4	24311-000120	O-RING, DYNAMIC (Φ12)	1	
5	TA00033098A	CONTROL VALVE	1	
6	24315-000160	O-RING	2	
7	26043-080452	BOLT W/WASHER	3	
8	22312-100200	PIN, DOWEL (10-20)	2	
9	TA00033085G	HYD CYLINDER CASE	1	
10	22272-000060	RING, CIRCLIP (Φ 06)	1	
11	TA00033126A	ROLLER	1	
12	26711-080002	NUT	2	
13	TA00034000C	CLEVIS AS'Y	1	
14	26216-120352	STEELBOLT	5	
15	TA00034079B	BRACKET, SWITCH	1	
16	22217-120000	WASHER, SPRING (Φ 12)	5	
17	26716-120002	BOLT,CYLINDER HEAD(B)	5	
18	26013-120352	SCREW,CAPTIVEWASHERCAP	5	
19	22312-100180	PIN, DOWEL (10-18)	1	
20	TA00019614A	CAP	1	
21	24311-000080	O-RING, DYNAMIC (Φ8)	5	
22	TA00045685A	PLUG	5	

FIG C101-2 4015R	101. CASE, HYD CYLINDER(2020.01~)	Year/Month 2020/01

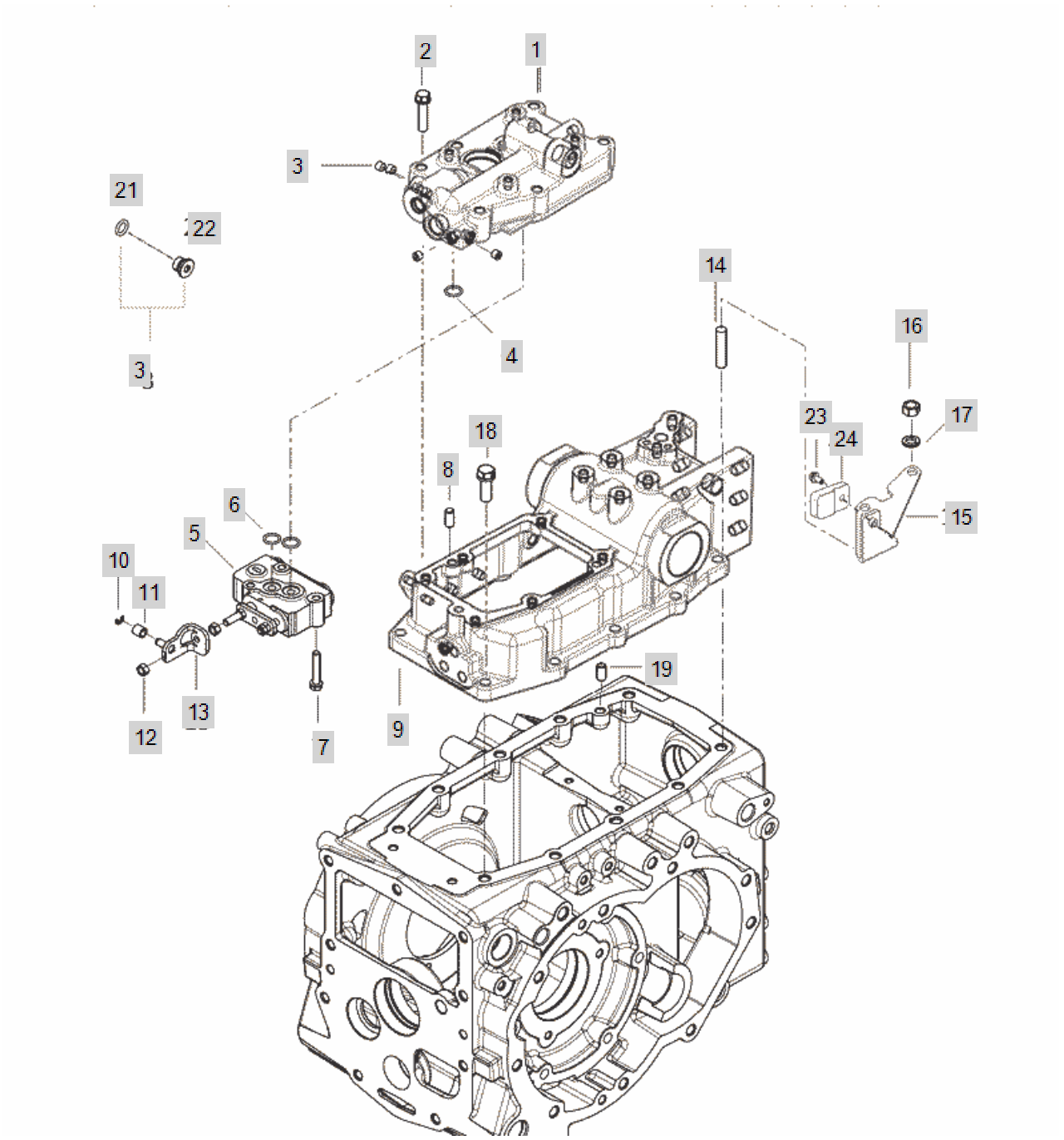

FIG C101-2 4015R	101. CASE, HYD CYLINDER(2020.01~)	Year/Month 2020/01

KeyNo.	Part Number	Part Name	Quantity	Other
1	TA00033096G	COVER, HYD CYLINDER	1	
2	26013-100452	HEX BOLT W/WASHER	6	
3	TA00045690A	PLUG ASS'Y	5	
4	24311-000120	O-RING, DYNAMIC (Φ12)	1	
5	TA00033098A	CONTROL VALVE	1	
6	24315-000160	O-RING	2	
7	26043-080452	BOLT W/WASHER	3	
8	22312-100200	PIN, DOWEL (10-20)	2	
9	TA00033085G	HYD CYLINDER CASE	1	
10	22272-000060	RING, CIRCLIP (Φ 06)	1	
11	TA00033126A	ROLLER	1	
12	26711-080002	NUT	2	
13	TA00060775A	CLEVIS	1	
14	26216-120352	STEELBOLT	5	
15	TA00060049A	BRACKET ASSY	1	
16	22217-120000	WASHER, SPRING (Φ 12)	5	
17	26716-120002	BOLT,CYLINDER HEAD(B)	5	
18	26013-120352	SCREW,CAPTIVEWASHERCAP	5	
19	22312-100180	PIN, DOWEL (10-18)	1	
20	TA00019614A	CAP	1	
21	24311-000080	O-RING, DYNAMIC (Φ8)	5	
22	TA00045685A	PLUG	5	
23	26106-060202	HEXFLANGEBOLT	1	
24	HA00001435A		1	

FIG C104-1 4015R	104. PISTON ASS'Y	Year/Month 2020/01

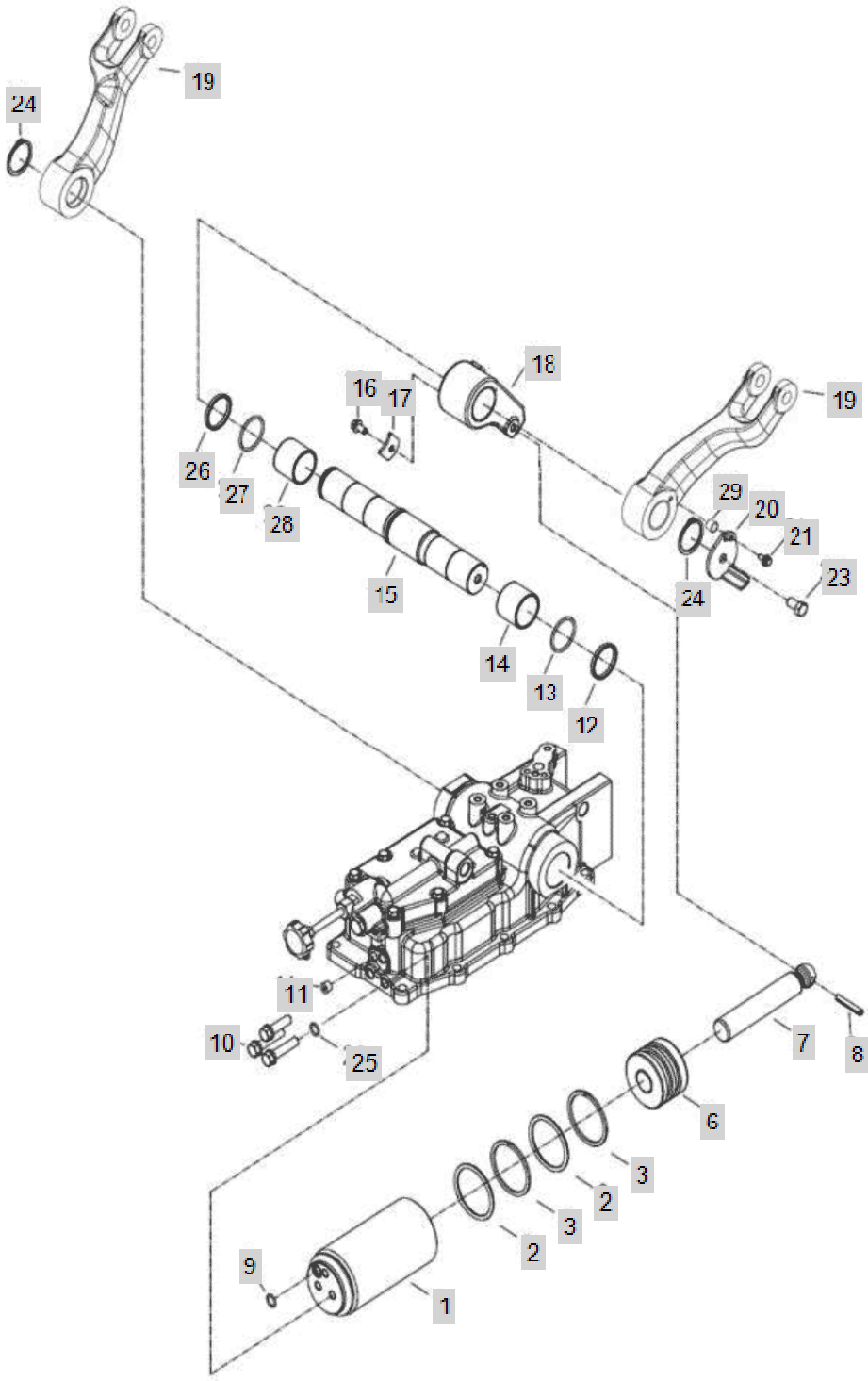

FIG C104-1 4015R	104. PISTON ASS'Y	Year/Month 2020/01

KeyNo.	Part Number	Part Name	Quantity	Other
1	TA00046960B	CYLINDER	1	
2	TA00046958A	O RING	2	
3	TA00046957A	BACKUP-RING	2	
6	TA00046959A	PISTON	1	
7	TA00033094A	ROD, PISTON	1	
8	22351-080050	PIN, SPRING (8-50)	1	
9	34311-000140	SUB TO-> 24311-000140	1	
10	26156-120552	HEXAGON HEAD BOLT	3	
11	TA00045690A	PLUG ASS'Y	1	
12	TA00035651A	RING	1	
13	24321-000500	O-RING (D50)	1	
14	TA00035650A	BUSH	1	
15	TA00033089C	SHAFT, LIFT LINK	1	
16	26106-080162	SCREW,HEXFLANGEHEADCAP	1	
17	TA00033095A	PLATE	1	
18	TA00033093B	CRANK, LIFT	1	
19	TA00040302A	LIFT ARM	2	
20	TA00034082C	CAMP ASSY	1	
21	26106-060202	HEXFLANGEBOLT	1	
23	26106-100202	HEX BOLT, (10-20)	1	
24	22242-000450	SNAP RING, SHAFT (Φ 45)	2	
25	TA00035675A	BONDED SEAL	3	
26	TA00033100A	RING, BACK UP	1	
27	24321-000450	O-RING, DYNAMIC (Φ45)	1	
28	TA00033099A	BUSH	1	
29	TA00035684A	COLLAR	1	

FIG C104-2 4015R	104. PISTON ASS'Y(2020.01~)	Year/Month 2020/01

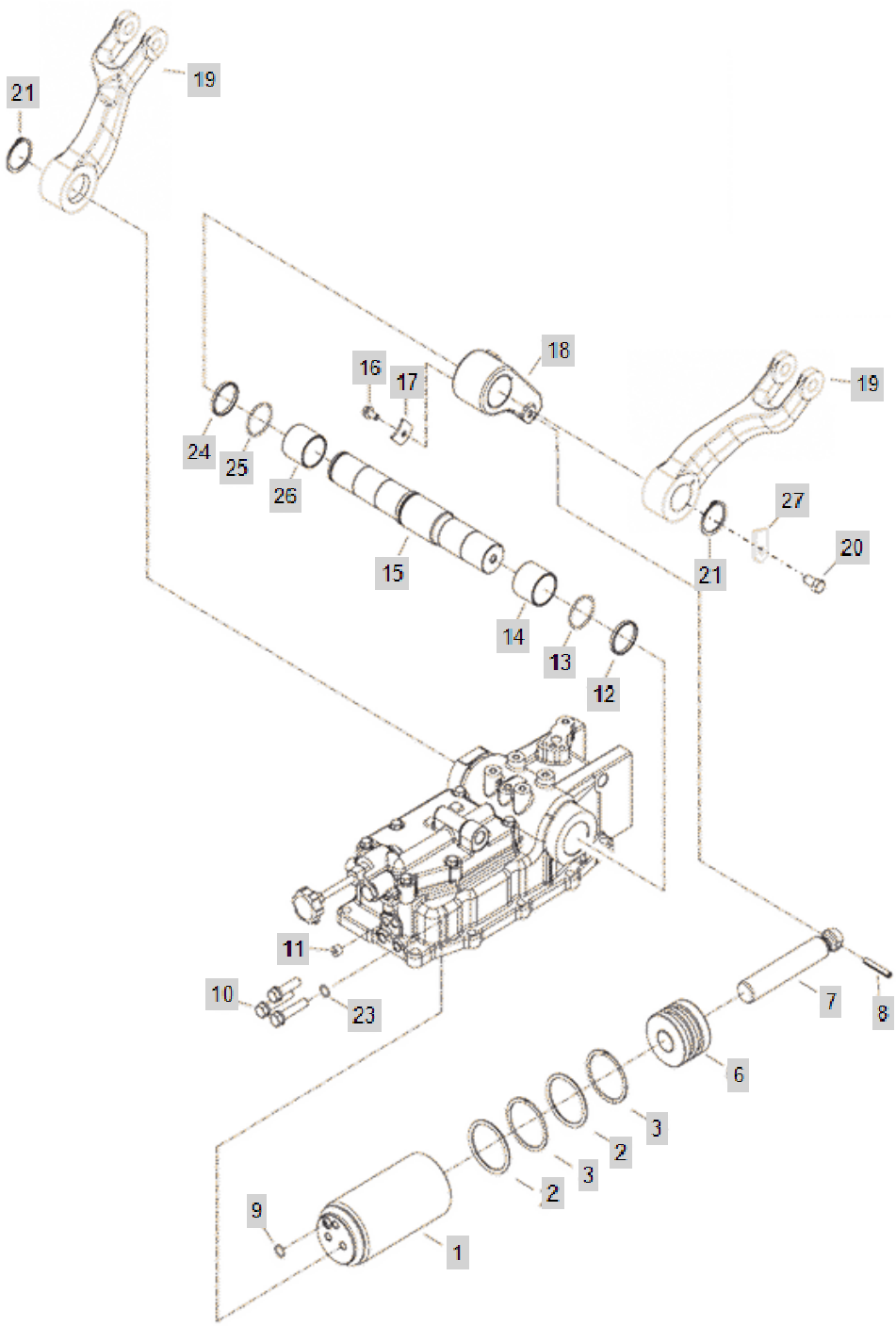

FIG C104-2 4015R	104. PISTON ASS'Y(2020.01~)	Year/Month 2020/01

KeyNo.	Part Number	Part Name	Quantity	Other
1	TA00046960B	CYLINDER	1	
2	TA00046958A	O RING	2	
3	TA00046957A	BACKUP-RING	2	
6	TA00046959A	PISTON	1	
7	TA00033094A	ROD, PISTON	1	
8	22351-080050	PIN, SPRING (8-50)	1	
9	34311-000140	SUB TO-> 24311-000140	1	
10	26156-120552	HEXAGON HEAD BOLT	3	
11	TA00045690A	PLUG ASS'Y	1	
12	TA00035651A	RING	1	
13	24321-000500	O-RING (D50)	1	
14	TA00035650A	BUSH	1	
15	TA00033089C	SHAFT, LIFT LINK	1	
16	26106-080162	SCREW,HEXFLANGEHEADCAP	1	
17	TA00033095A	PLATE	1	
18	TA00033093B	CRANK, LIFT	1	
19	TA00040302A	LIFT ARM	2	
20	26106-100202	HEX BOLT, (10-20)	1	
21	22242-000450	SNAP RING, SHAFT (Φ 45)	2	
23	TA00035675A	BONDED SEAL	3	
24	TA00033100A	RING, BACK UP	1	
25	24321-000450	O-RING, DYNAMIC (Φ45)	1	
26	TA00033099A	BUSH	1	
27	HA00001435A		1	

FIG C108 4015R	108. SAFETY VALVE	Year/Month 2020/01

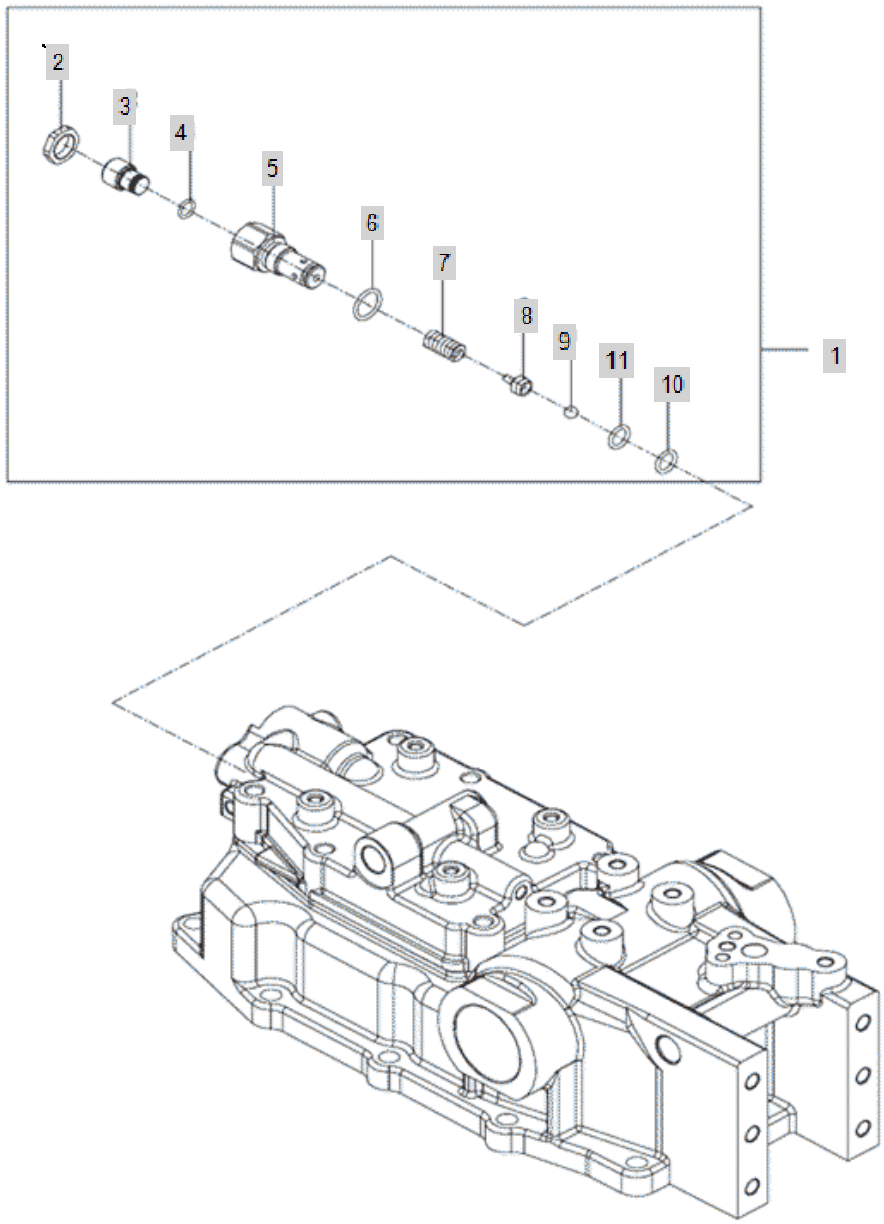

FIG C108 4015R	108. SAFETY VALVE	Year/Month 2020/01

KeyNo.	Part Number	Part Name	Quantity	Other
1	TA00036187A	SAFETY VALVE	1	
2	TA00036419A	NUT	1	
3	TA00036418A	BOLT	1	
4	24315-000100	O-RING	1	
5	TA00036392A	BODY, SAFETY VALVE	1	
6	24315-000180	O-RING(PTYPE)	1	
7	TA00036420A	SPRING	1	
8	TA00036417A	BALL GUIDE	1	
9	24190-100001	Ball, Steel (5/16)	1	
10	24315-000125	O-RING(P-TYPE)	1	
11	TA00061847A	BACKUP RING	1	ADDITION

FIG C109 4015R	109. STOP VALVE	Year/Month 2020/01

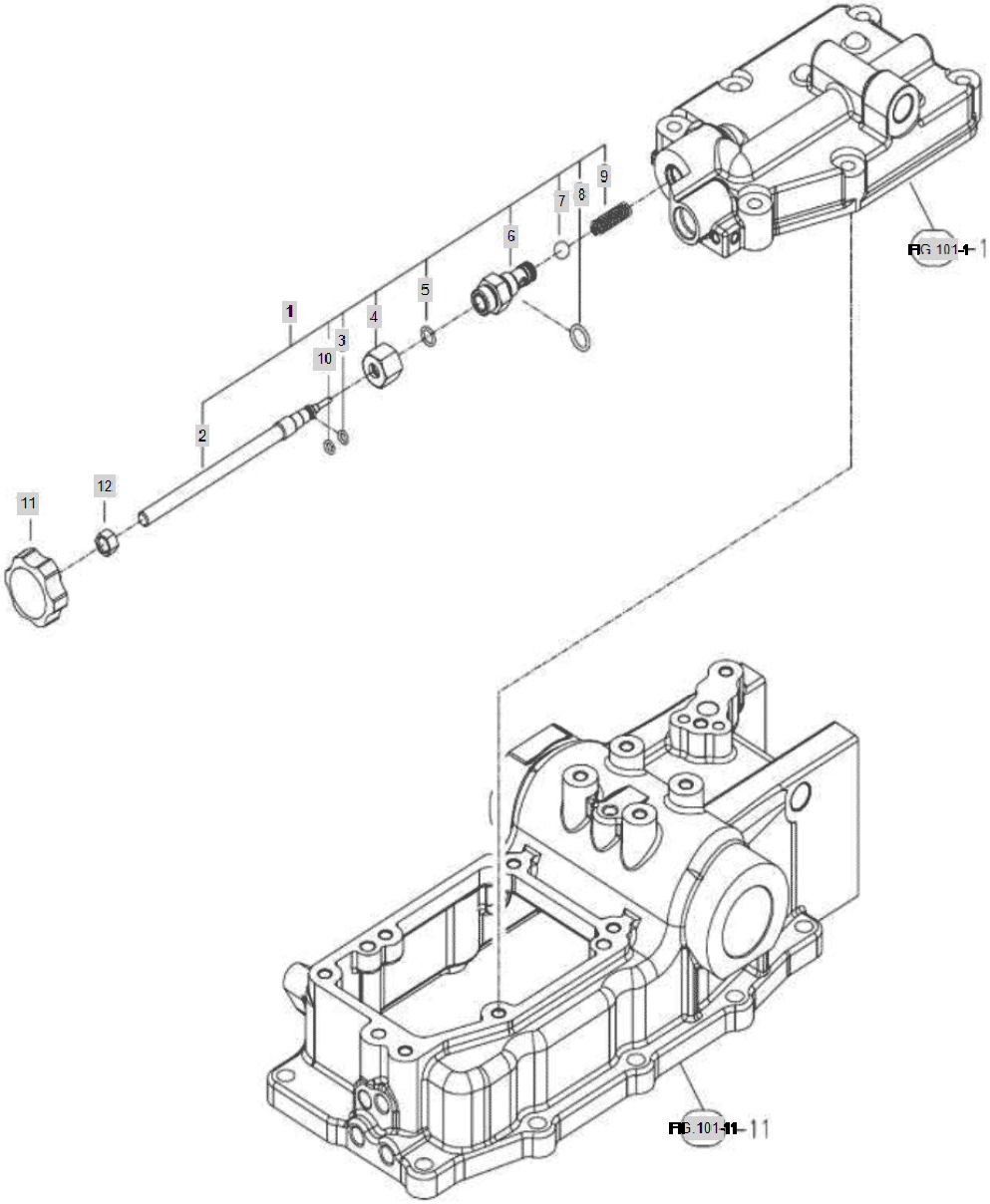

FIG C109 4015R	109. STOP VALVE	Year/Month 2020/01

KeyNo.	Part Number	Part Name	Quantity	Other
1	TA00033887B	FLOW REGULATOR ASSY	1	
2	TA00033889B	SCREW	1	
3	24315-000060	O RING	1	
4	TA00033888A	NUT	1	
5	24311-000100	O-RING, DYNAMIC (Φ10)	1	
6	TA00033890B	BODY	1	
7	24190-140001	STEEL BALL	1	
8	24311-000140	O-RING, DYNAMIC (Φ14)	1	
9	TA00034091B	SPRING, LOCKING VALVE	1	
10	TA00036537A	RING, BACK UP	1	
11	TTA9040000A4	KNOB	1	
12	26716-100002	Nut, Hexa (Φ10)	1	
FIG.101-1	C101		1	
FIG.101-11	C101		1	

FIG C111.1 4015R	111-1. HYD CONTROL POSITION TYPE	Year/Month 2020/01

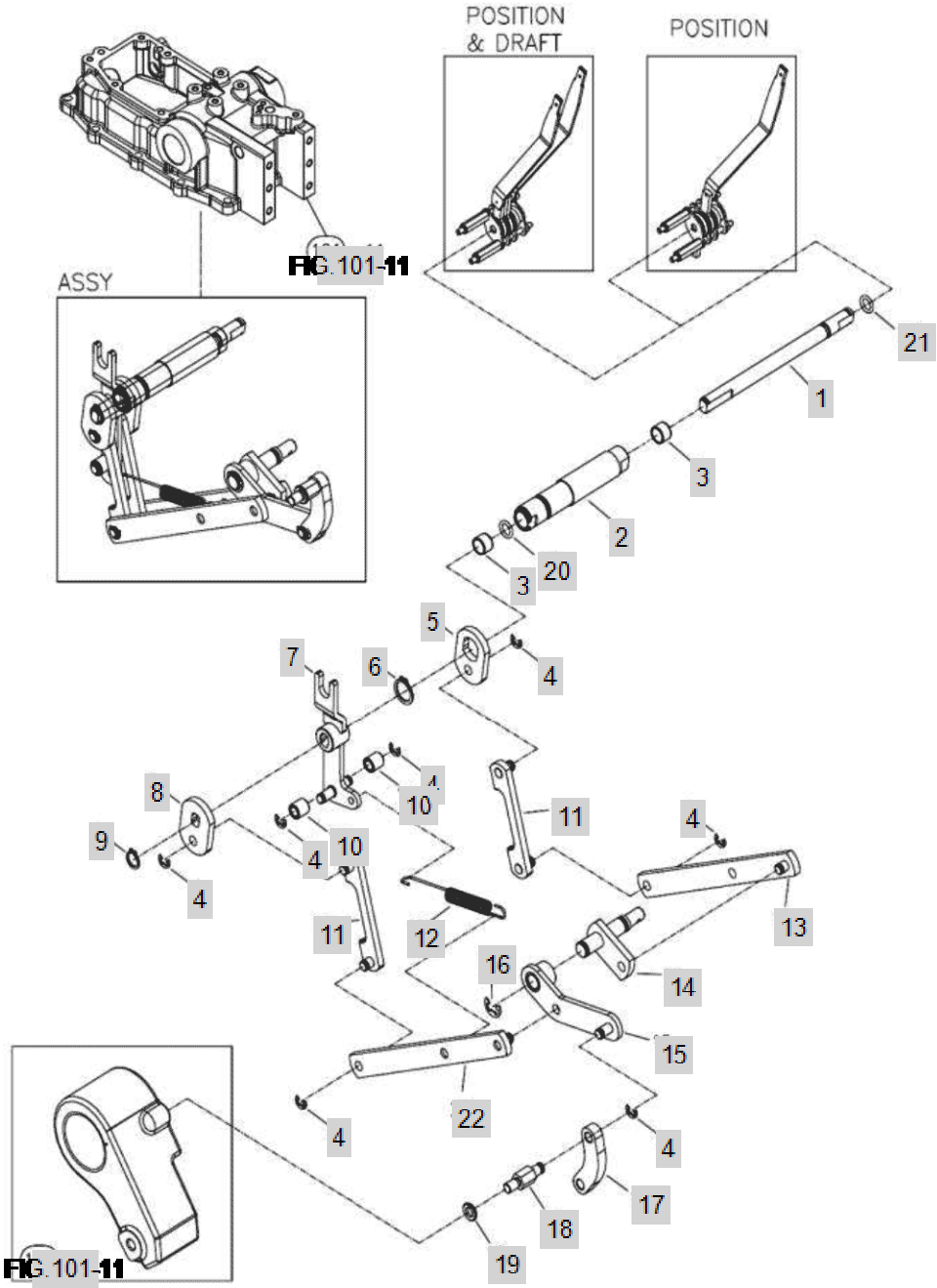

FIG C111.1 4015R	111-1. HYD CONTROL POSITION TYPE	Year/Month 2020/01

KeyNo.	Part Number	Part Name	Quantity	Other
1	TA00033128B	SHAFT	1	
2	TA00033127B	SHAFT	1	
3	24550-012100	BUSH	2	
4	22272-000060	RING, CIRCLIP (Φ 06)	7	
5	TA00033119A	CONTROL PLATE, DRAFT	1	
6	22242-000180	SNAP RING, SHAFT (Φ 18)	1	
7	TA00033121B	LINK ASSY, CONNECTING	1	
8	TA00033120A	CONTROL PLATE, POSITION	1	
9	22242-000120	SNAP RING, SHAFT (Φ 12)	1	
10	TA00033126A	ROLLER	2	
11	TA00033117B	LINK ASSY B	2	
12	TA00033902C	SPRING	1	
13	TA00033111B	CONTROL LINK. DRAFT LOAD	1	
14	TA00033108B	LINK ASSY (IN)	1	
15	TA00033106B	FEED BACK LINK, POSTION	1	
16	22272-000090	RING, CIRCLIP (Φ 09)	1	
17	TA00033102B	LINK, LIFT CRANK	1	
18	TA00033101A	LINK PIN, FEEDBACK	1	
19	22217-080000	WASHER, SPRING (Φ 08)	1	
20	24311-000160	O-RING, DYNAMIC (Φ16)	1	
21	24311-240100	SEAL, O-RING	1	
22	TA00033114C	LINK, POSITION	1	
FIG.101-11	C101		2	

FIG C111.2 4015R	111-2. HYD CONTROL POSITION TYPE	Year/Month 2020/01

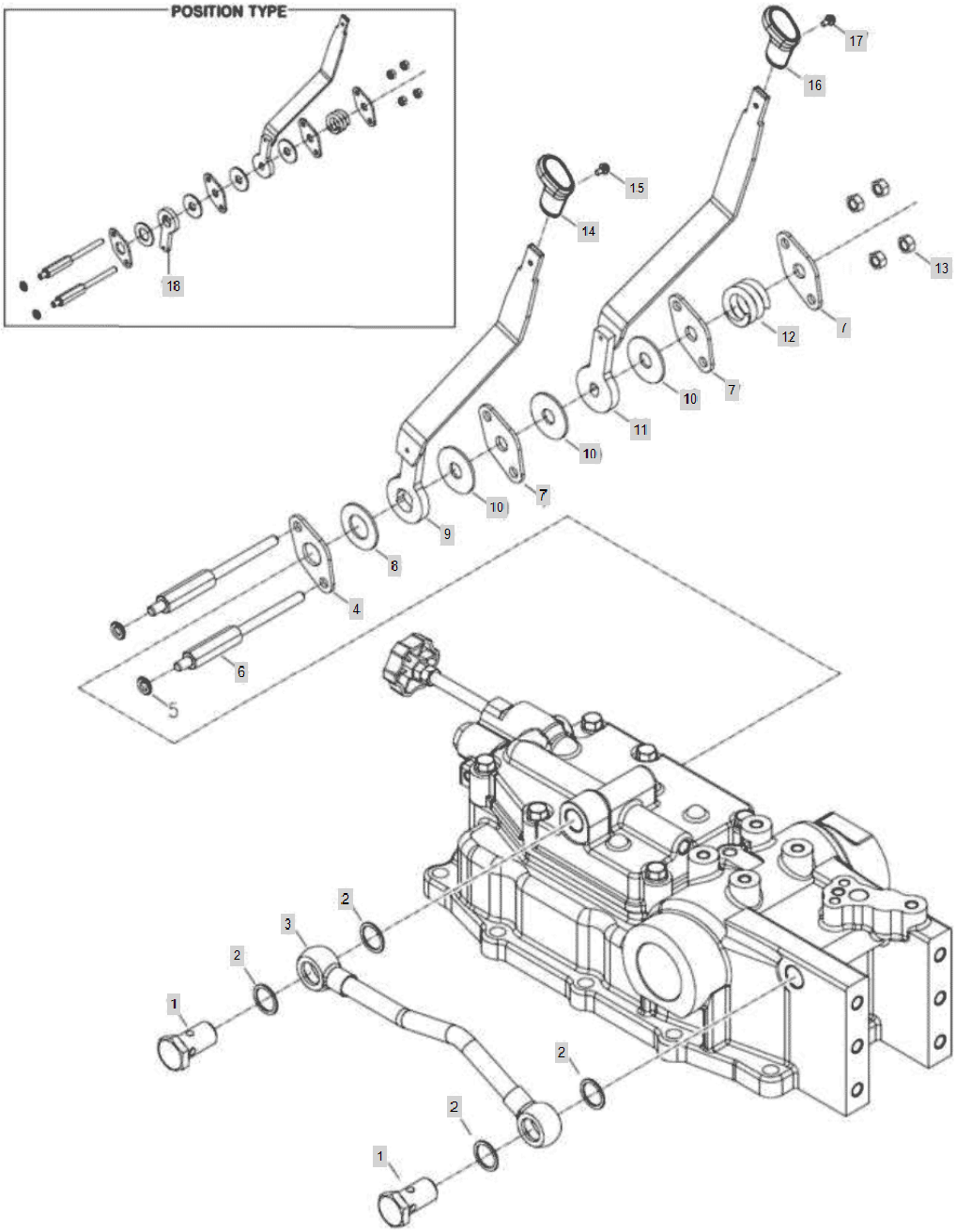

FIG C111.2 4015R	111-2. HYD CONTROL POSITION TYPE	Year/Month 2020/01

KeyNo.	Part Number	Part Name	Quantity	Other
1	TTB4180000A4	BOLT	2	
2	TA00036405A	BONDED SEAL	4	
3	TA00034085B	MOUNTING SUPPORT	1	
4	TA00033964A	BRACKET	1	
6	TA00033978A	BOLT	2	
7	TA00033965A	BRACKET A	3	
8	TA00033155A	FRICTION PLATE	1	
9	TA00034008A	LEVER, D-CONTROL	1	
10	TA00033966A	PLATE A	3	
11	TA00042363A	POSITION LEVER ASSY(US)	1	
12	TA00033901A	SPRING	1	
13	26716-080002	NUT,HEX (D8)	4	
14	TA00030763A	KNOB, DRAFT CONTROL	1	
15	26023-040102	SCREW W/WASHER	1	
16	TA00030762A	KNOB, POSITOIN CONTROL	1	
17	26023-040162	SCREW	1	
18	TA00033156A	LEVER ARM, DRAFT	1	

FIG C113 4015R	113. DRAFT CONTROL	Year/Month 2020/01

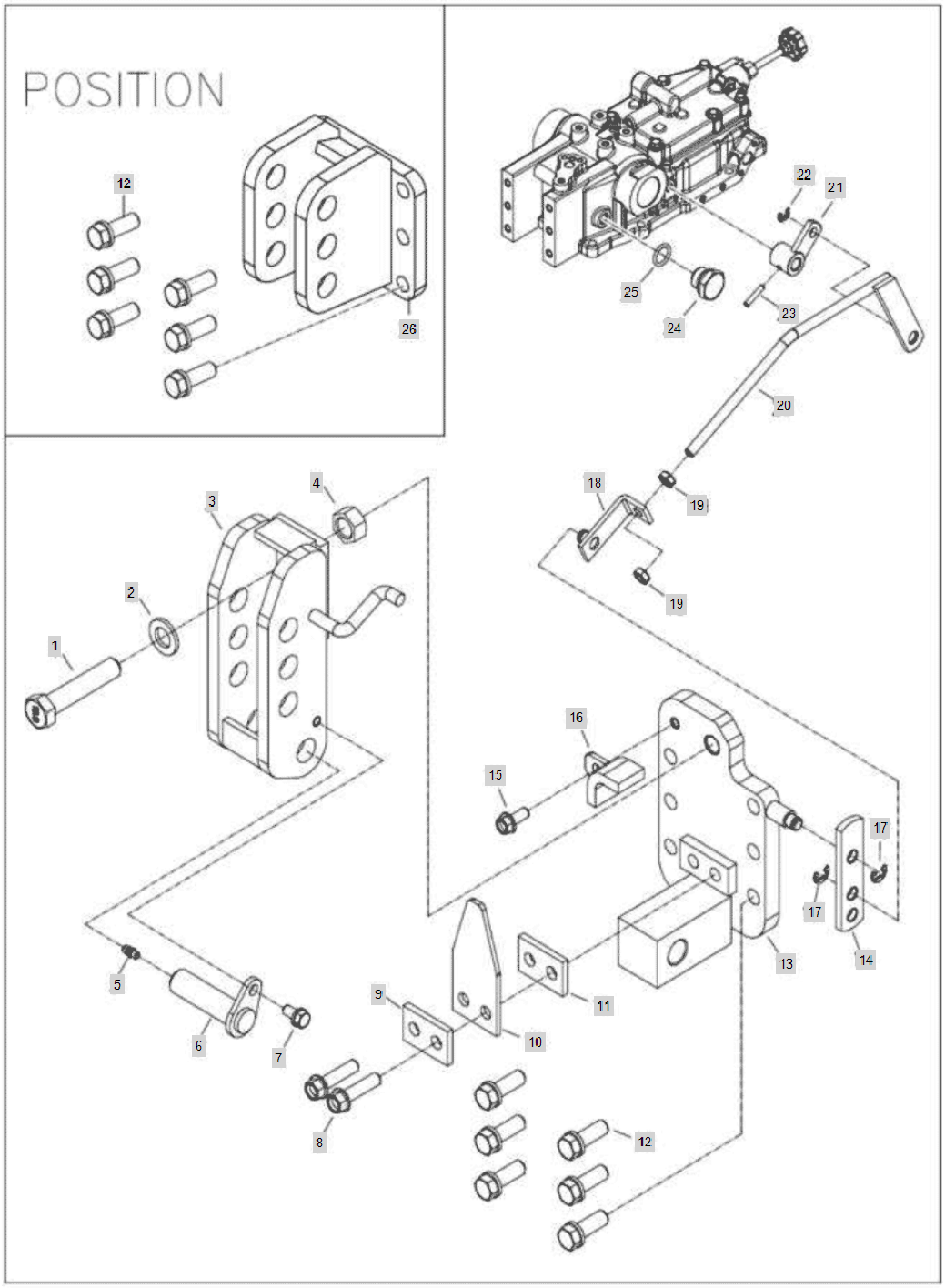

FIG C113 4015R	113. DRAFT CONTROL	Year/Month 2020/01

KeyNo.	Part Number	Part Name	Quantity	Other
1	TA00000660A	BOLT	1	
2	22137-160000	WASHER, PLAIN (Φ 16)	1	
3	TA00033138B	HINGE D, TOP LINK	1	
4	26736-160002	HEXNUT	1	
5	TA27160000A4	GREASE NIPPLE	1	
6	TTB3090000A4	PIN,HINGE	1	
7	26013-080162	Bolt, Hexa (8-16)	1	
8	26106-100402	SCREW,HEXFLANGEHEADCAP	2	
9	TA00034144A	PLATE	1	
10	TA00033137A	PLATE, HINGE	1	
11	TA00034144A	PLATE	1	
12	26013-120352	SCREW,CAPTIVEWASHERCAP	6	
13	TA00034018B	SUPPORT D, HINGE ASS'Y	1	
14	TA00033143C	PLATE	1	
15	26106-080202	SQR FLANGE BOLT	1	
16	TA00034142B	PLATE ASS'Y	1	
17	22272-000080	RING, CIRCLIP (Φ 08)	2	
18	TA00033144B	PLATE ASSY	1	
19	26756-080002	NUT	2	
20	TA00033150B	CONTROL ROD, DRAFT	1	
21	TA00033147B	LINK ASSY (OUT)	1	
22	22272-000060	RING, CIRCLIP (Φ 06)	1	
23	22351-040020	PIN, SPRING (4X20)	1	
24	NTA1130100A9		1	
25	24311-000140	O-RING, DYNAMIC (Φ14)	1	
26	TA00034323A	BRACKET ASS'Y, TOP LINK	1	

FIG C114A 4015R	114. HYD PIPING	Year/Month 2020/01

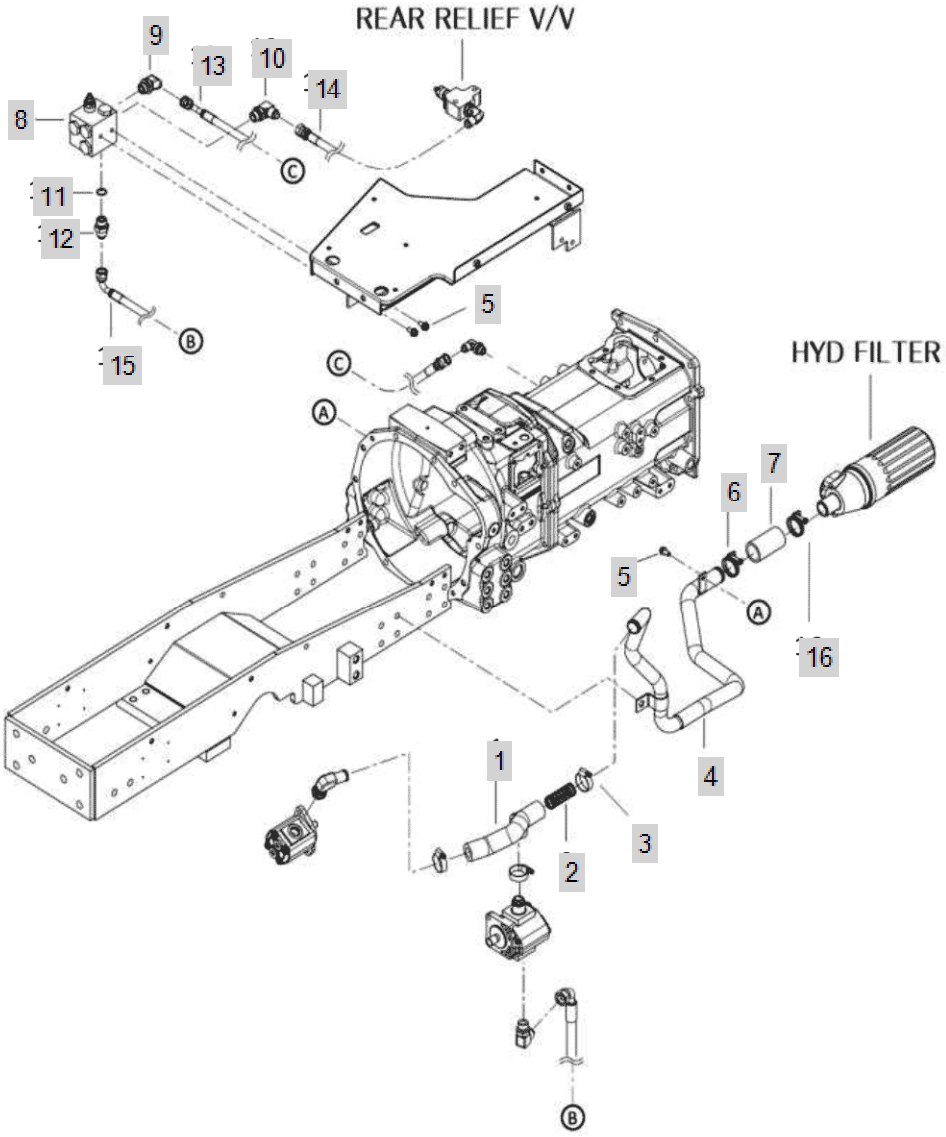

FIG C114A 4015R	114. HYD PIPING	Year/Month 2020/01

KeyNo.	Part Number	Part Name	Quantity	Other
1	TA00039695B	RUBBER HOSE	1	
2	TTB4360000A		1	
3	23000-041000	HOSECLAMP	3	
4	TA00046513B	PIPE(K3)	1	
5	26106-080162	SCREW,HEXFLANGEHEADCAP	3	
6	TA00045083A	HOSE BAND	1	
7	TA00040493B	HOSE	1	
8	TA00039335A	VALVE, FRONT	1	
9	FB34060000A4	ELBOW	1	
10	TA00039579A	ELBOW	1	
11	24311-000180	O-RING, DYNAMIC (Φ18)	1	
12	CVE4020000A4	NIPPLE	1	
13	TA00040242A	HOSE,HIGH PRESSURE	1	
14	TA00041510A	HOSE(1/2)	1	
15	TA00039580A	HOSE	1	
16	23010-044000	HOSEBAND	1	

FIG C114D-2 4015R	114. HYD PIPING (2019.04~)	Year/Month 2020/01

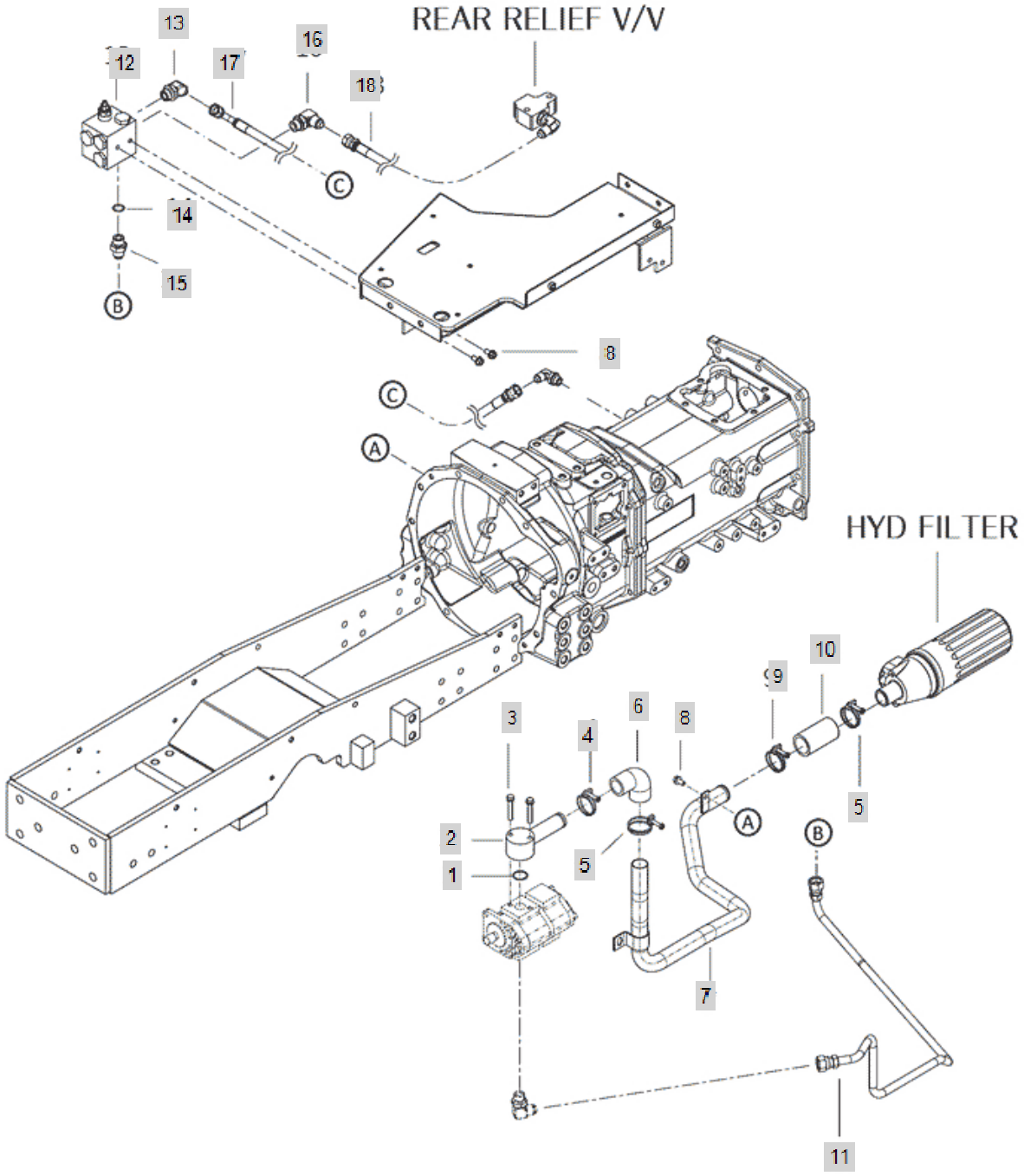

FIG C114D-2 4015R	114. HYD PIPING (2019.04~)	Year/Month 2020/01

KeyNo.	Part Number	Part Name	Quantity	Other
1	24341-000260	O-RING, FIX (Φ26)	1	
2	NTB4490000A4	FLANGE,LOWPRESSUREPIPE	1	
3	26013-080502	Bolt, Hexa (8-50)	2	
4	23010-040000	HOSEBAND	1	
5	23010-044000	HOSEBAND	2	
6	TA00017334A	HOSE C	1	
7	TA00059502A	PIPE ASS'Y , LOWER PRESSURE	1	
8	26106-080162	SCREW,HEXFLANGEHEADCAP	3	
9	TA00045083A	HOSE BAND	1	
10	TA00040493B	HOSE	1	
11	TA00049972B	PIPE ASS'Y , HIGHER PRESSURE	1	
12	TA00039335A	VALVE, FRONT	1	
13	FB34060000A4	ELBOW	1	
14	24311-000180	O-RING, DYNAMIC (Φ18)	1	
15	CVE4020000A4	NIPPLE	1	
16	TA00039579A	ELBOW	1	
17	TA00040242A	HOSE,HIGH PRESSURE	1	
18	TA00041510A	HOSE(1/2)	1	

FIG C118 4015R	118. HYD FILTER	Year/Month 2020/01

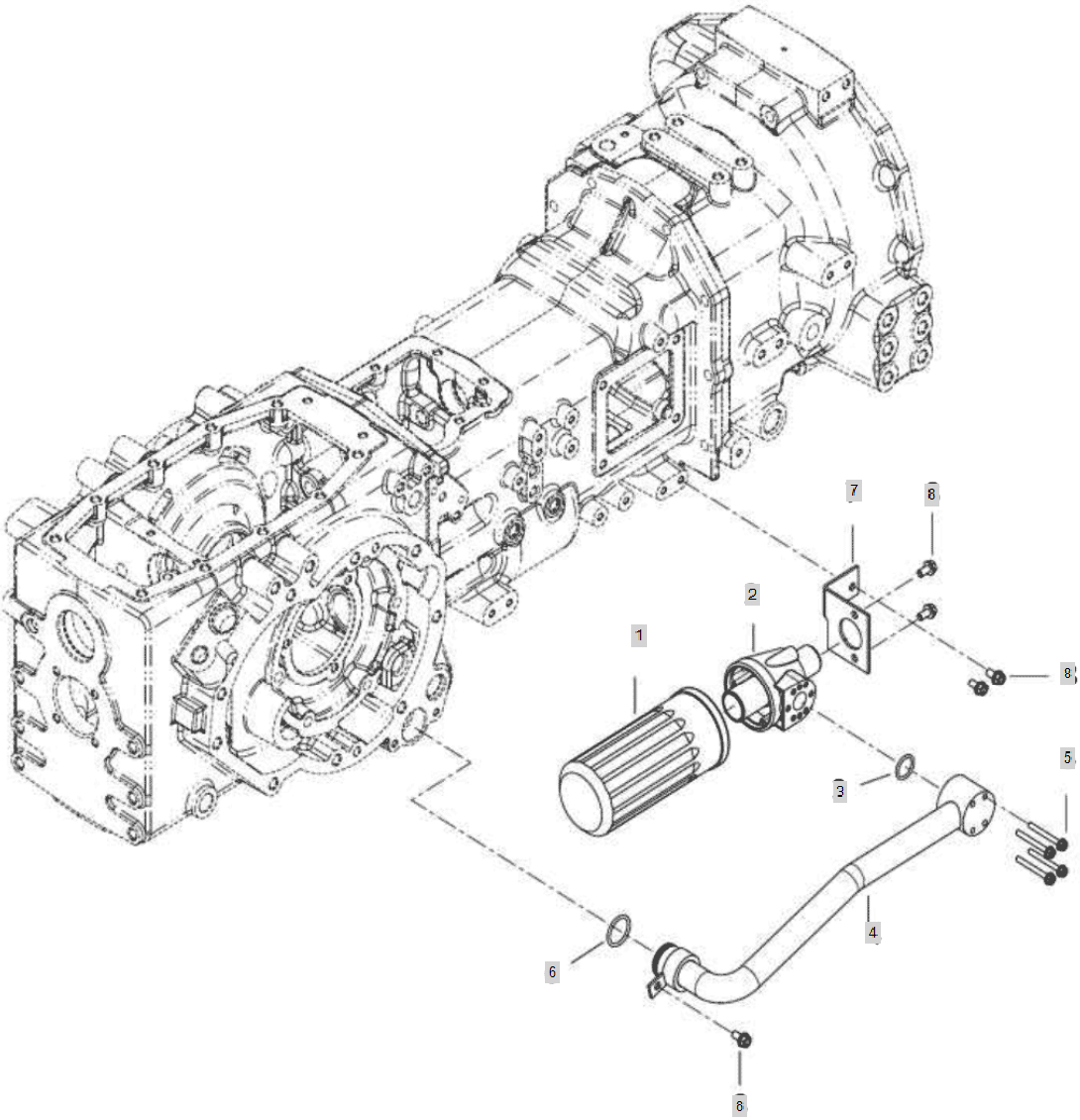

FIG C118 4015R	118. HYD FILTER	Year/Month 2020/01

KeyNo.	Part Number	Part Name	Quantity	Other
1	TA00025525B	FILTER, HYD OIL (20R/20C SERIES)	1	
2	TTB8020011A3	COVER: FILTER	1	
3	24321-000250	O-RING	1	
4	TA00039138B	PIPE	1	
5	26106-060552	HEX FLANGE BOLT	4	
6	24311-000320	O-RING, DYNAMIC (Φ32)	1	
7	TA00039142A	BRACKET	1	
8	26106-080162	SCREW,HEXFLANGEHEADCAP	5	

FIG C119B 4015R	119. ELE'C WIRING	Year/Month 2020/01

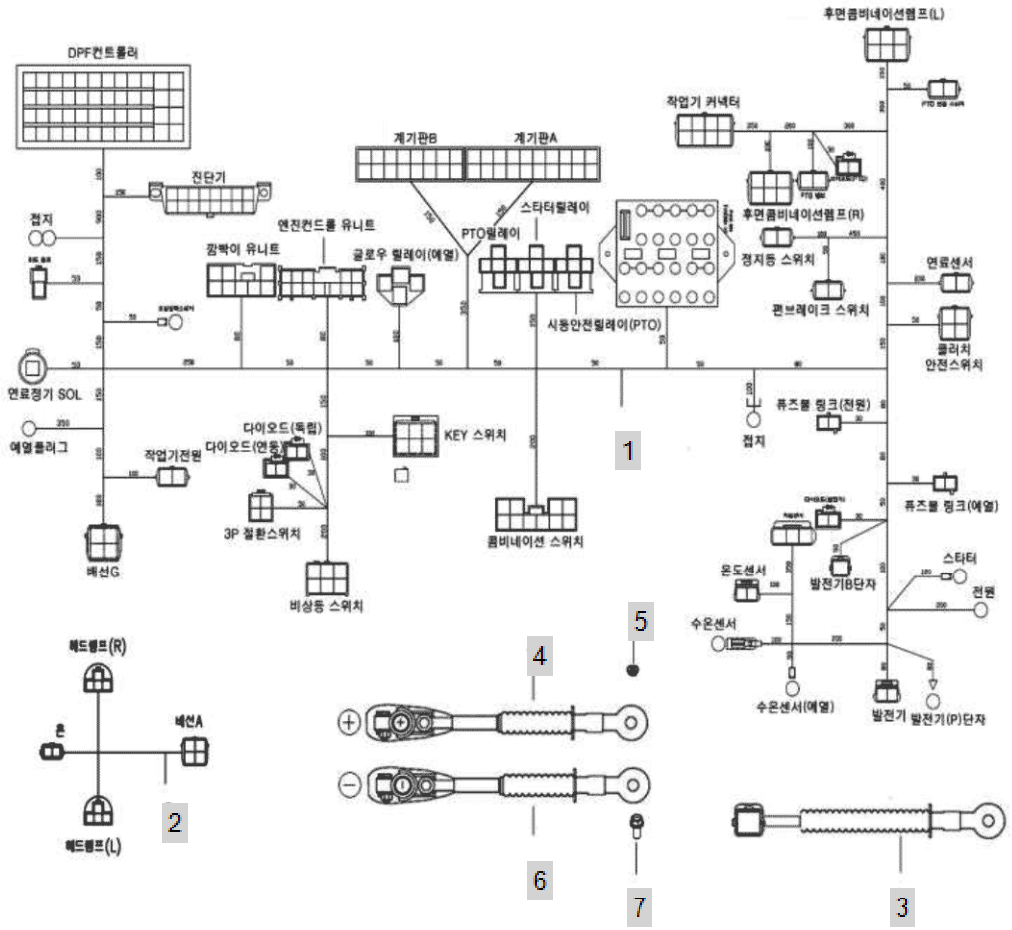

FIG C119B 4015R	119. ELE'C WIRING	Year/Month 2020/01

KeyNo.	Part Number	Part Name	Quantity	Other
1	HA00001531A	HARNESS	1	
1-1	HA00001003A	HARNESS ASS'Y	1	
2	HA00001477A	HARNESS G	1	
2-1	HA00001055A	HARNESS G	1	
3	CQH3120000A	WIRE HARNESS H	1	
4	TCD5270000C	BATTERY CABLE(+)	1	
5	26367-080002	HEX FLANGE NUT (Φ8)	1	
6	HA00000980A	-CABLE	1	
7	26106-100142	Bolt, Hexa (10-14)	1	

FIG C124B 4015R	124. BATTERY	Year/Month 2020/01

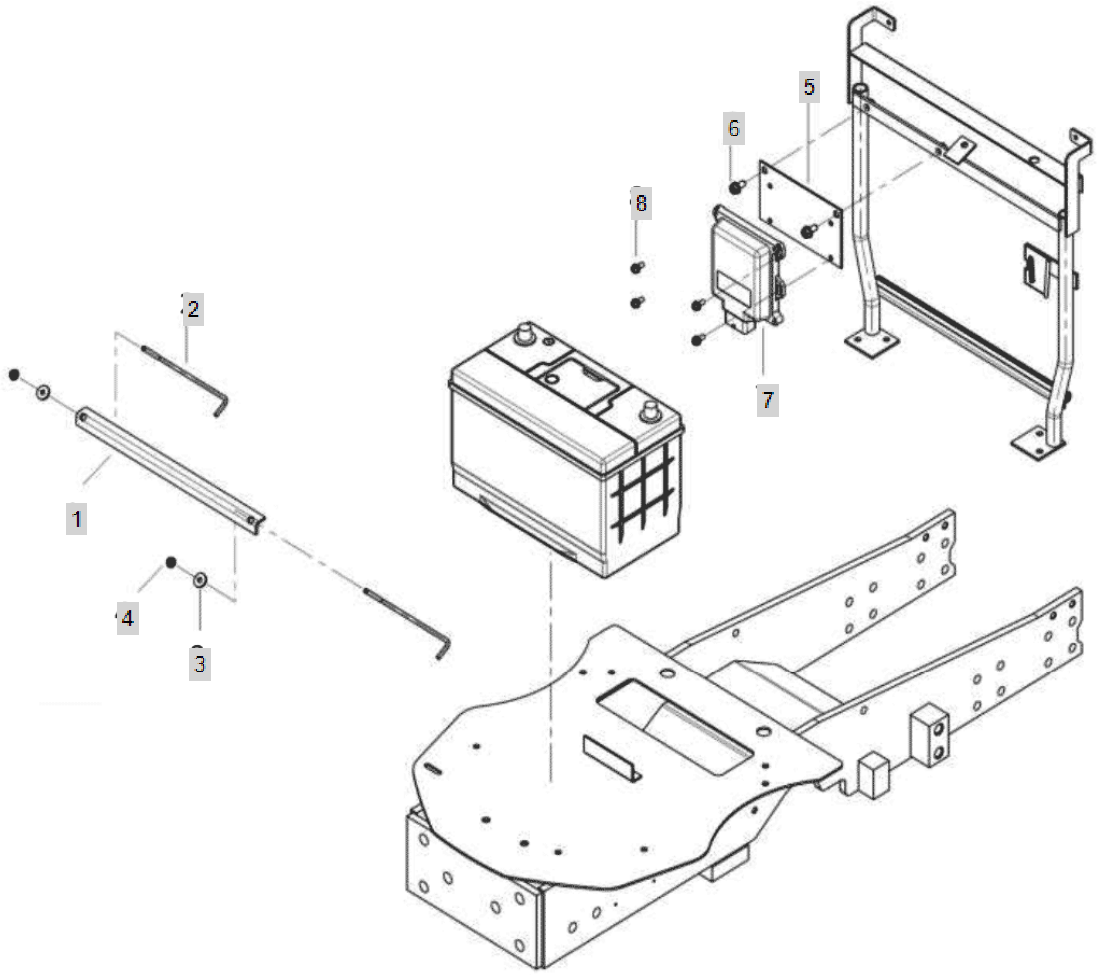

FIG C124B 4015R	124. BATTERY	Year/Month 2020/01

KeyNo.	Part Number	Part Name	Quantity	Other
1	TA00039672B	BRACKET	1	
2	TA00039673B	ROD	2	
3	22157-060000	WASHER, PLAIN (Φ 06)	2	
4	26367-060002	Nut, Hexa (Φ6)	2	
5	TA00040609B	BRACKET	1	
6	26106-080162	SCREW,HEXFLANGEHEADCAP	2	
7	EA00003292B	DPF LOGGER	1	
8	26023-060162	Screw, (6-16)	4	

FIG C125 4015R	125. SWITCH	Year/Month 2020/01

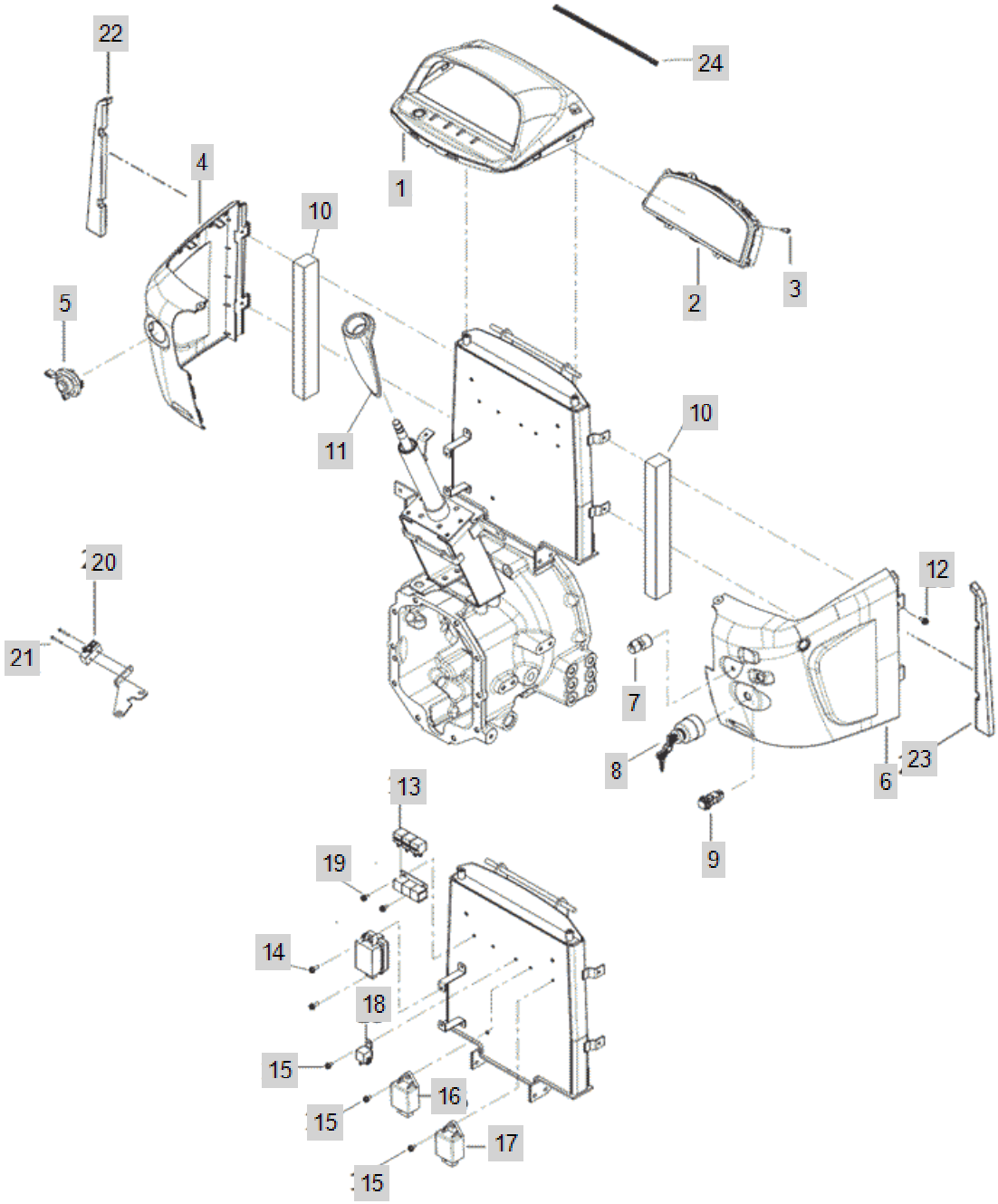

FIG C125 4015R	125. SWITCH	Year/Month 2020/01

KeyNo.	Part Number	Part Name	Quantity	Other
1	TA00041201A	COVER, METER	1	
2	HA00001412A	METER ASSY	1	
2-1	HA00000722B	METER ASSY	1	
3	22867-400120	TAPPING SCREW 4X12	8	
3-1	22857-400120	BOLT	8	delete
4	TA00041199A	DASHBOARD L	1	
5	HA00000067A	COMBINATION SWITCH	1	
6	TA00041200B	DASH BOARD R	1	
7	HA00001225A	PTO SWITCH	1	
7-1	HA00001350A	PTO SWITCH	1	DELETE
7-2	HA00000467A	4WD S/W(NF)	1	DELETE
8	TTC5030000C3	IGNITION SWITCH	1	
9	FTC5340000A3	EMERGENCY LAMP SWITCH	1	
10	TA00040936C	URETHANE	2	
11	TA00041202A	COVER, COLUMN	1	
12	TCE9010000B4	BOLT	9	
13	FTC5130000A3	RELAY(5P)	4	
14	26106-060182	Bolt, Hexa (6-18)	2	
15	26106-060122	HEX BOLT (6-12)	3	
16	HA00001111A	GLOW CONTROLLER	1	
17	HA00001595A	FLASHER RELAY	1	
17-1	HA00000821A	FLASHER RELAY	1	
18	FTB9160000A	RELAY G4R	1	
19	26013-060169	BOLT(+SW)	2	
20	FTC5110000A3	SWITCH, PTO CONNECT	1	
21	26557-040302	+SCREW	2	
22	TA00053984A	URETHANE L	1	
23	TA00053985A	URETHANE R	1	
24	TA00054116A	STRIP, BONNET	1	

FIG C135.1-1 4015R	135-1. BONNET	Year/Month 2020/01

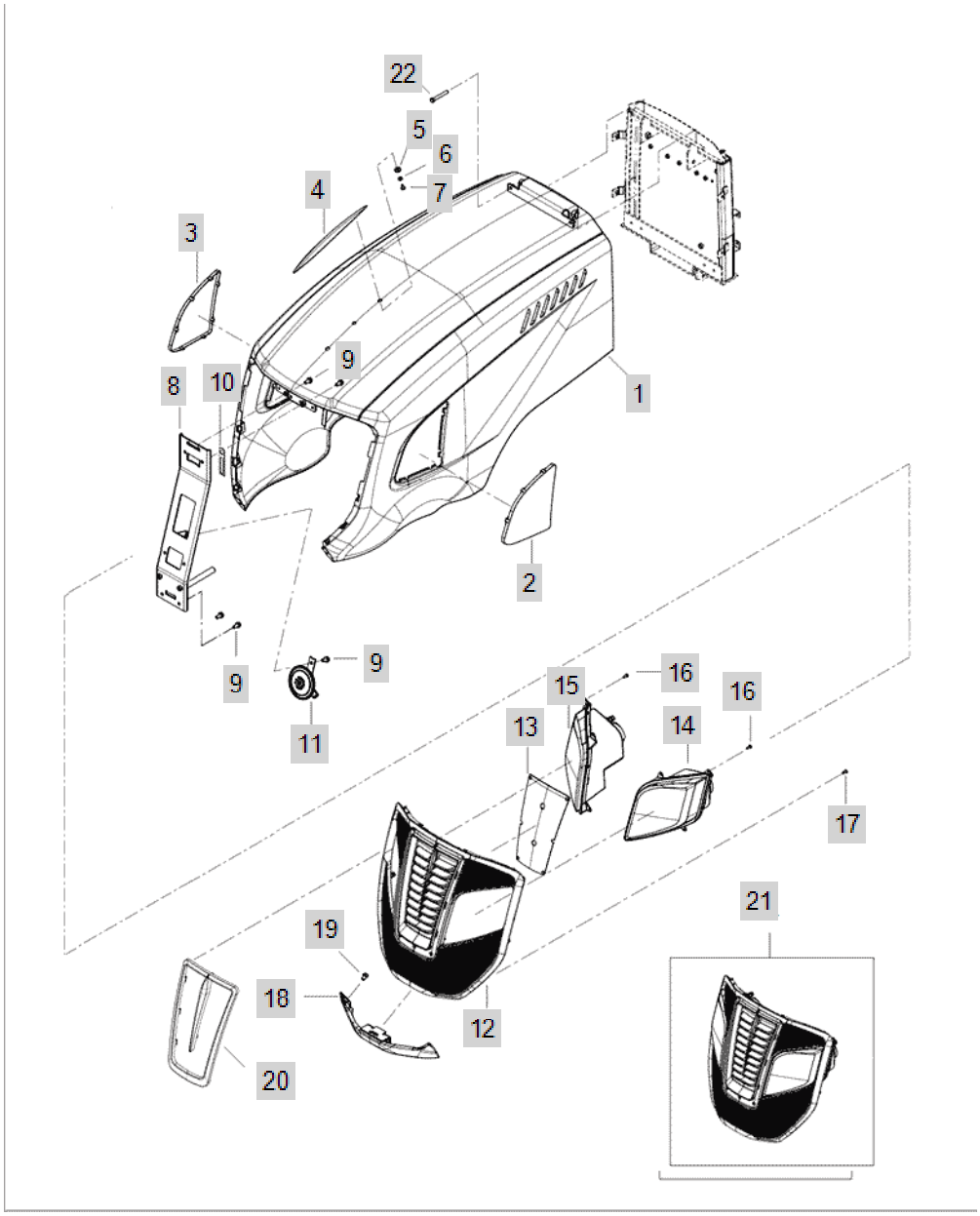

FIG C135.1-1 4015R	135-1. BONNET	Year/Month 2020/01

KeyNo.	Part Number	Part Name	Quantity	Other
1	TA00041144D	FRAME,BONNET	1	
2	TA00041142A	MESH_L	1	
3	TA00041143A	MESH_R	1	
4	TA00041210A	MARK, CENTER	1	
5	VD06370000B	SUB TO ->VD06370000B4 YIELDING RUBBER	3	
6	22157-060000	WASHER, PLAIN (Φ 06)	3	
7	22587-480126	TAPPING SCREW	3	
8	TA00041187C	SUPPORT ASSY, FRONT	1	
9	26106-080162	SCREW,HEXFLANGEHEADCAP	5	
10	TT80180000A4	Clamp, B	2	
11	HA00000929A	HORN	1	
12	TA00041607B	FRONT MASK ASSY	1	
13	TA00041581A	FRONT MASK PLATE	1	
14	TA00041596A	HEADLAMP(LH)	1	
15	TA00041597A	HEADLAMP(RH)	1	
16	22587-480206	TAPPING SCREW	2	
17	22587-480126	TAPPING SCREW	27	
18	TA00041166A	LOWER, BONNET	1	
19	26367-080002	HEX FLANGE NUT (Φ8)	2	
20	TA00042801A	DECO,FRONT MASK	1	
21	TA00041608A	FRONT MASK ASSY	1	
22	26117-080409	BOLT	2	

FIG C135.1-2 4015R	135-1. BONNET(2018.08~)	Year/Month 2020/01

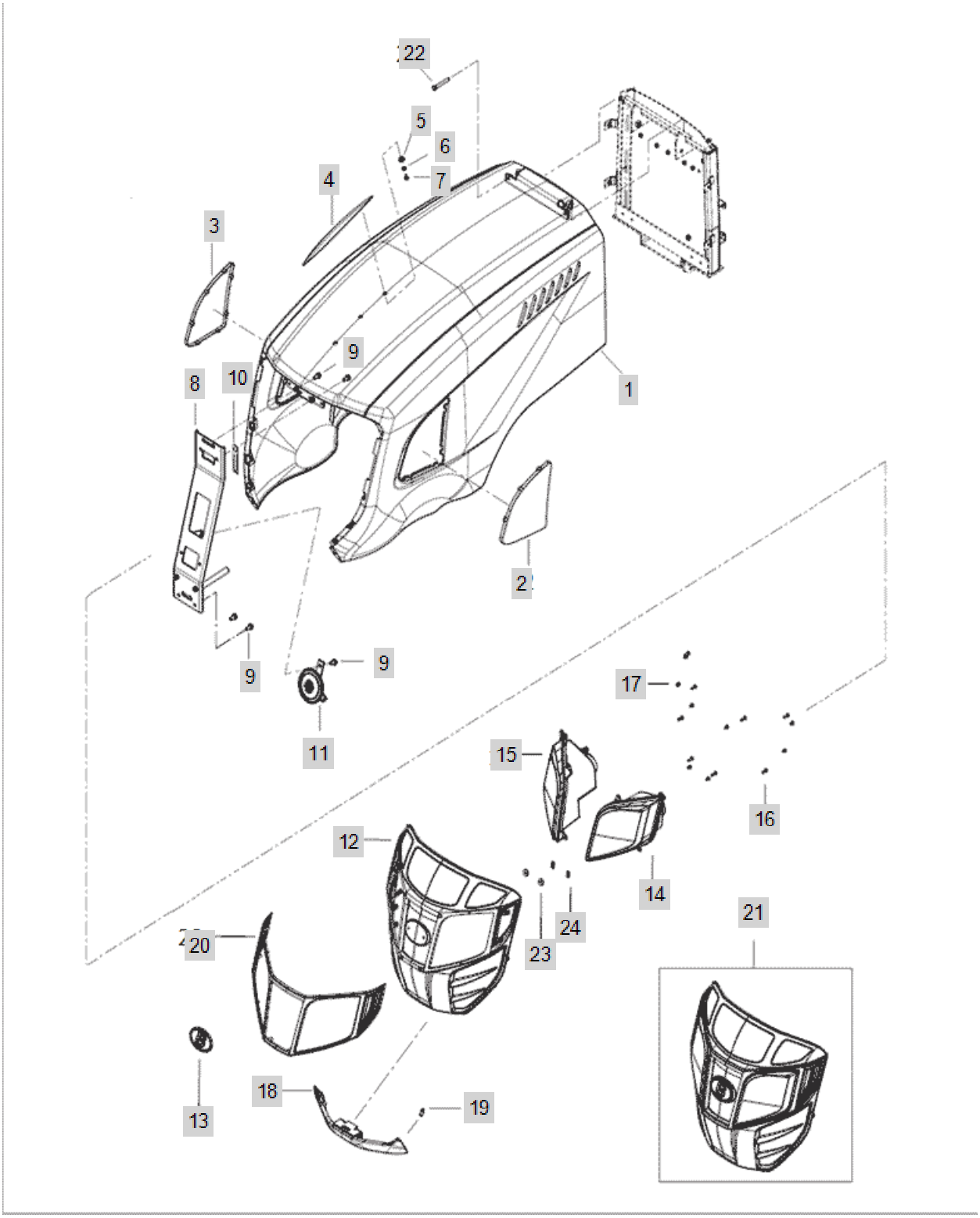

FIG C135.1-2 4015R	135-1. BONNET(2018.08~)	Year/Month 2020/01

KeyNo.	Part Number	Part Name	Quantity	Other
1	TA00041144D	FRAME,BONNET	1	
2	TA00041142A	MESH_L	1	
3	TA00041143A	MESH_R	1	
4	TA00041210A	MARK, CENTER	1	
5	VD06370000B	SUB TO ->VD06370000B4 YIELDING RUBBER	3	
6	22157-060000	WASHER, PLAIN (Φ 06)	3	
7	22587-480126	TAPPING SCREW	3	
8	TA00041187C	SUPPORT ASSY, FRONT	1	
9	26106-080162	SCREW,HEXFLANGEHEADCAP	5	
10	TT80180000A4	Clamp, B	2	
11	HA00000929A	HORN	1	
12	TA00055334A	FRONT MASK	1	
13	TA00052253A	EMBLEM	1	
14	HA00001483A	HEAD LAMP L	1	
15	HA00001484A	HEAD LAMP R	1	
16	22587-480206	TAPPING SCREW	2	
17	22587-480126	TAPPING SCREW	27	
18	TA00041166A	LOWER, BONNET	1	
19	26367-080002	HEX FLANGE NUT (Φ8)	2	
20	TA00055335A	FRONT GRILL	1	
21	TA00056767A	FRONT MASK ASSY	1	
22	26117-080409	BOLT	2	
23	TTD6440000A4	CUSHION, RUBBER	2	
24	TB41290000A4	NUT	2	

FIG C135.1-3 4015R	135-1. BONNET(2019.04~)	Year/Month 2020/01

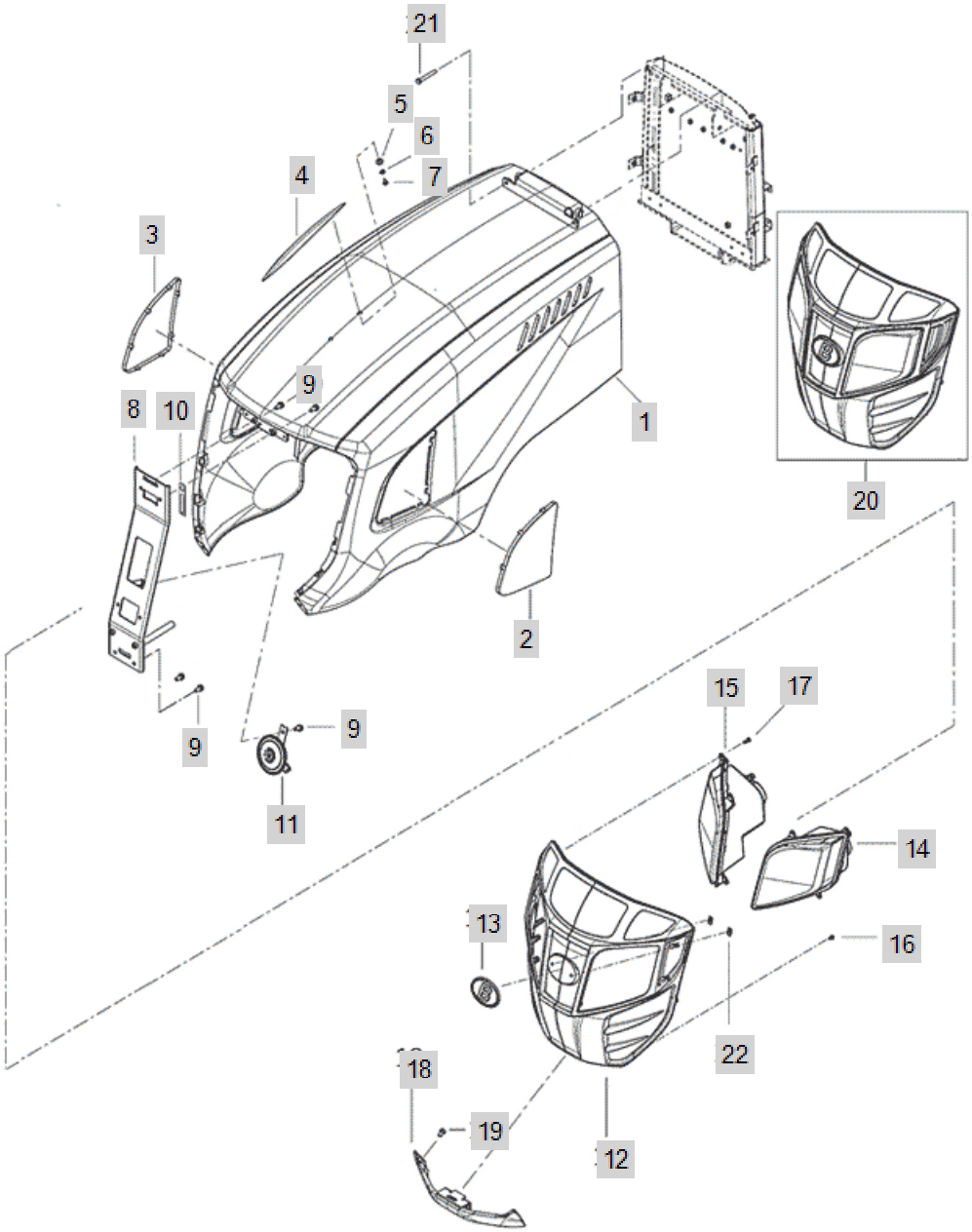

FIG C135.1-3 4015R	135-1. BONNET(2019.04~)	Year/Month 2020/01

KeyNo.	Part Number	Part Name	Quantity	Other
1	TA00041144D	FRAME,BONNET	1	
2	TA00041142A	MESH_L	1	
3	TA00041143A	MESH_R	1	
4	TA00041210A	MARK, CENTER	1	
5	VD06370000B	SUB TO ->VD06370000B4 YIELDING RUBBER	3	
6	22157-060000	WASHER, PLAIN (Φ 06)	3	
7	22587-480126	TAPPING SCREW	3	
8	TA00053545A	SUPPORT ASSY	1	
9	26106-080162	SCREW,HEXFLANGEHEADCAP	5	
10	TT80180000A4	Clamp, B	2	
11	HA00000929A	HORN	1	
12	TA00055334A	FRONT MASK	1	
13	TA00052253A	EMBLEM	1	
14	HA00001609A	HEAD LAMP L	1	
15	HA00001610A	HEAD LAMP R	1	
16	22587-480126	TAPPING SCREW	13	
17	22587-480206	TAPPING SCREW	10	
18	TA00041166A	LOWER, BONNET	1	
19	26367-080002	HEX FLANGE NUT (Φ8)	2	
20	TA00056767A	FRONT MASK ASSY	1	
21	26117-080409	BOLT	2	
22	TB41290000A4	NUT	2	

FIG C135.2 4015R	135-2. BONNET	Year/Month 2020/01

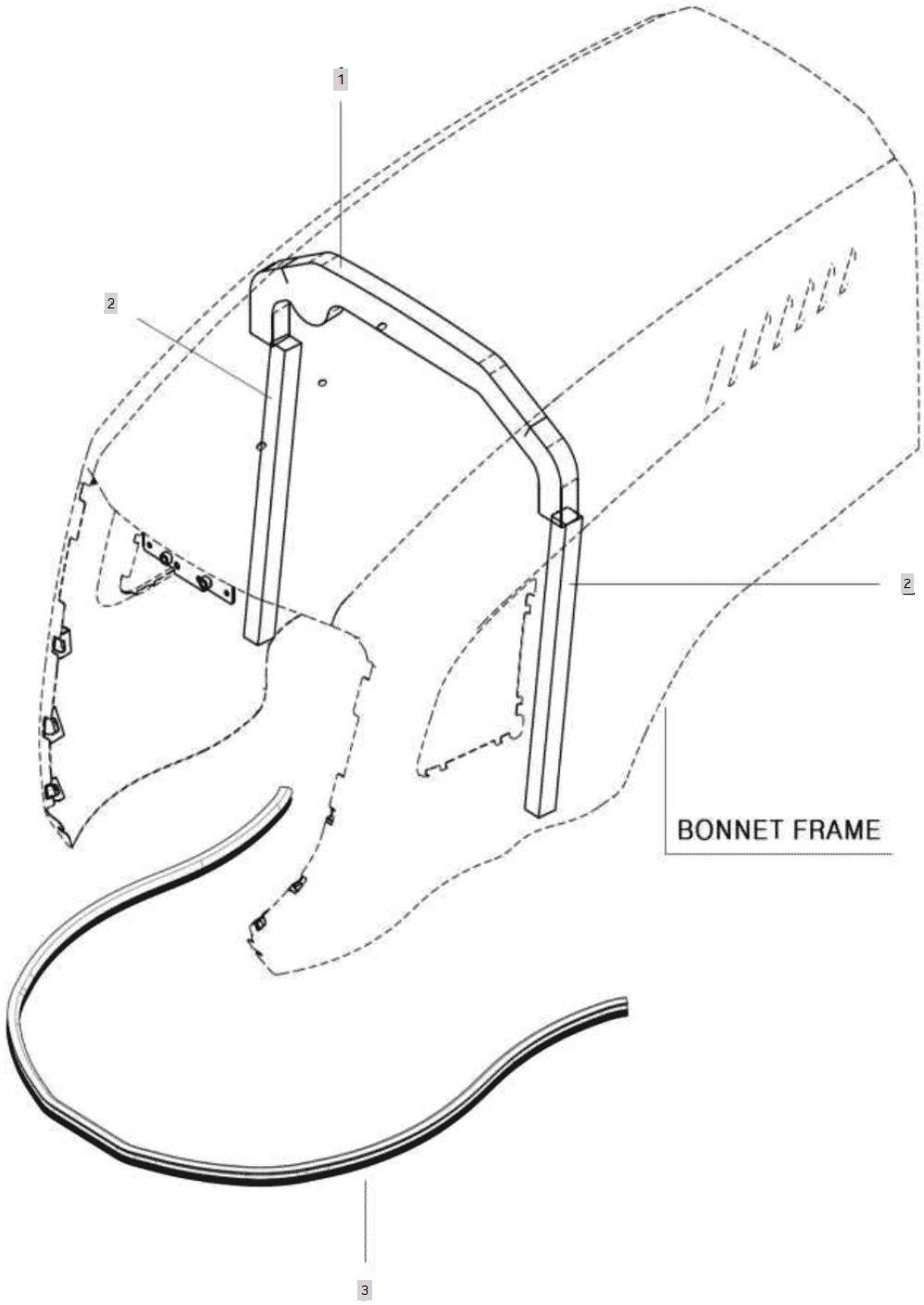

FIG C135.2 4015R	135-2. BONNET	Year/Month 2020/01

KeyNo.	Part Number	Part Name	Quantity	Other
1	TA00041593B	UPPER BONNET URETHANE	1	
2	TA00041594A	LEFT BONNET URETHANE	2	
3	TA00041790A	STRIP, BONNET	1	

FIG C136-1 4015R	136. LOCKING ASS'Y, BONNET	Year/Month 2020/01

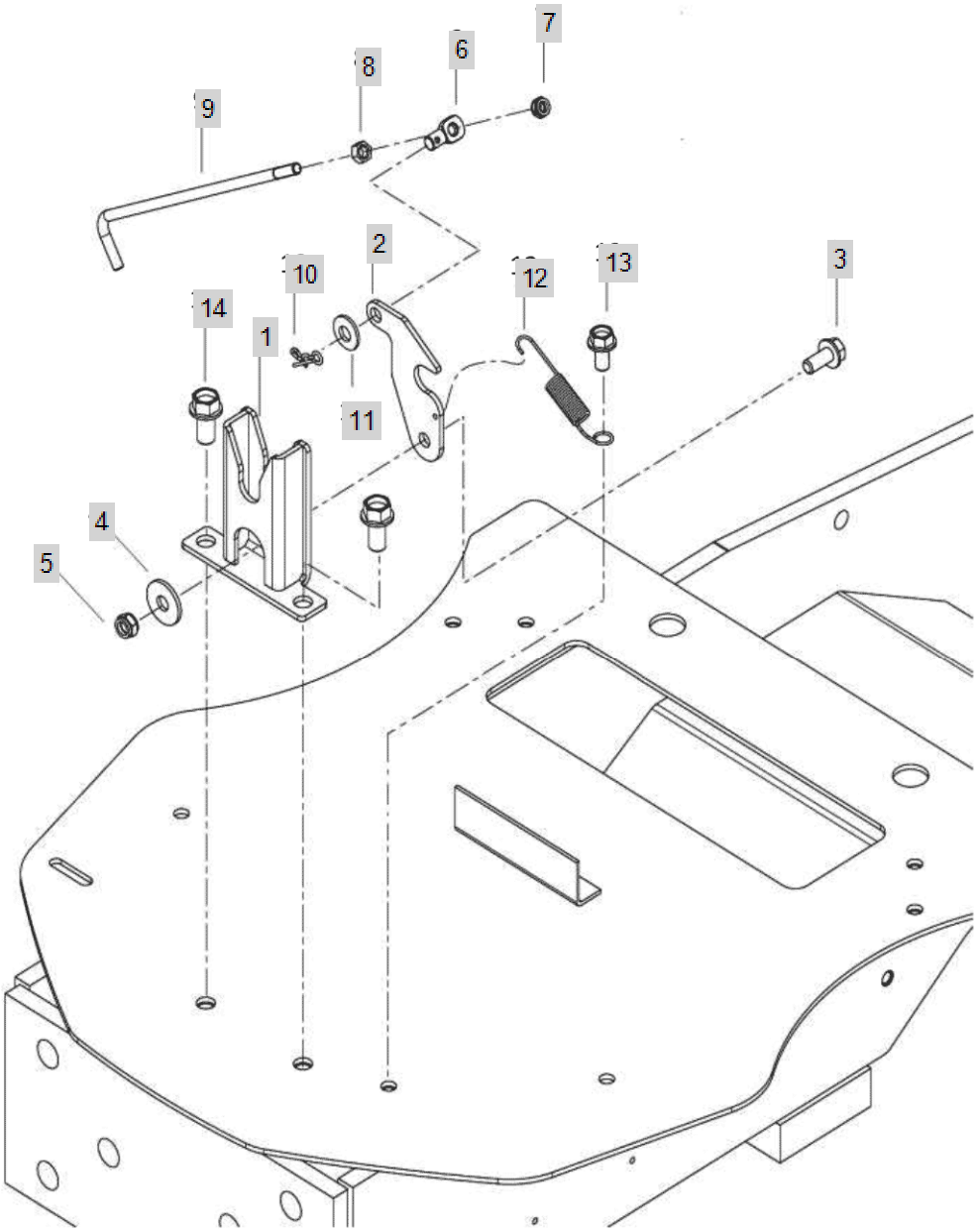

FIG C136-1 4015R	136. LOCKING ASS'Y, BONNET	Year/Month 2020/01

KeyNo.	Part Number	Part Name	Quantity	Other
1	TA00029712B	BODY	1	
2	TA00029717A	LOCK	1	
3	26106-080182	SCREW,HEXFLANGEHEADCAP	1	
4	22151-080000	WASHER, PLAIN (Φ 08)	1	
5	26347-080002	Unut	1	
6	FE04180000A	CONNECTOR	1	
7	26347-060002	NUT6	1	
8	26716-060002	HEX NUT (Φ6)	1	
9	TA00040648A	ROAD	1	
10	RR64050000B	SNAP PIN 8	1	
11	22117-080000	WASHER, PLAIN (Φ 08)	1	
12	TA00032837B	SPRING	1	
13	26106-080162	SCREW,HEXFLANGEHEADCAP	1	
14	26106-100202	HEX BOLT, (10-20)	2	

FIG C136-2 4015R	136. LOCKING ASS'Y, BONNET	Year/Month 2020/01

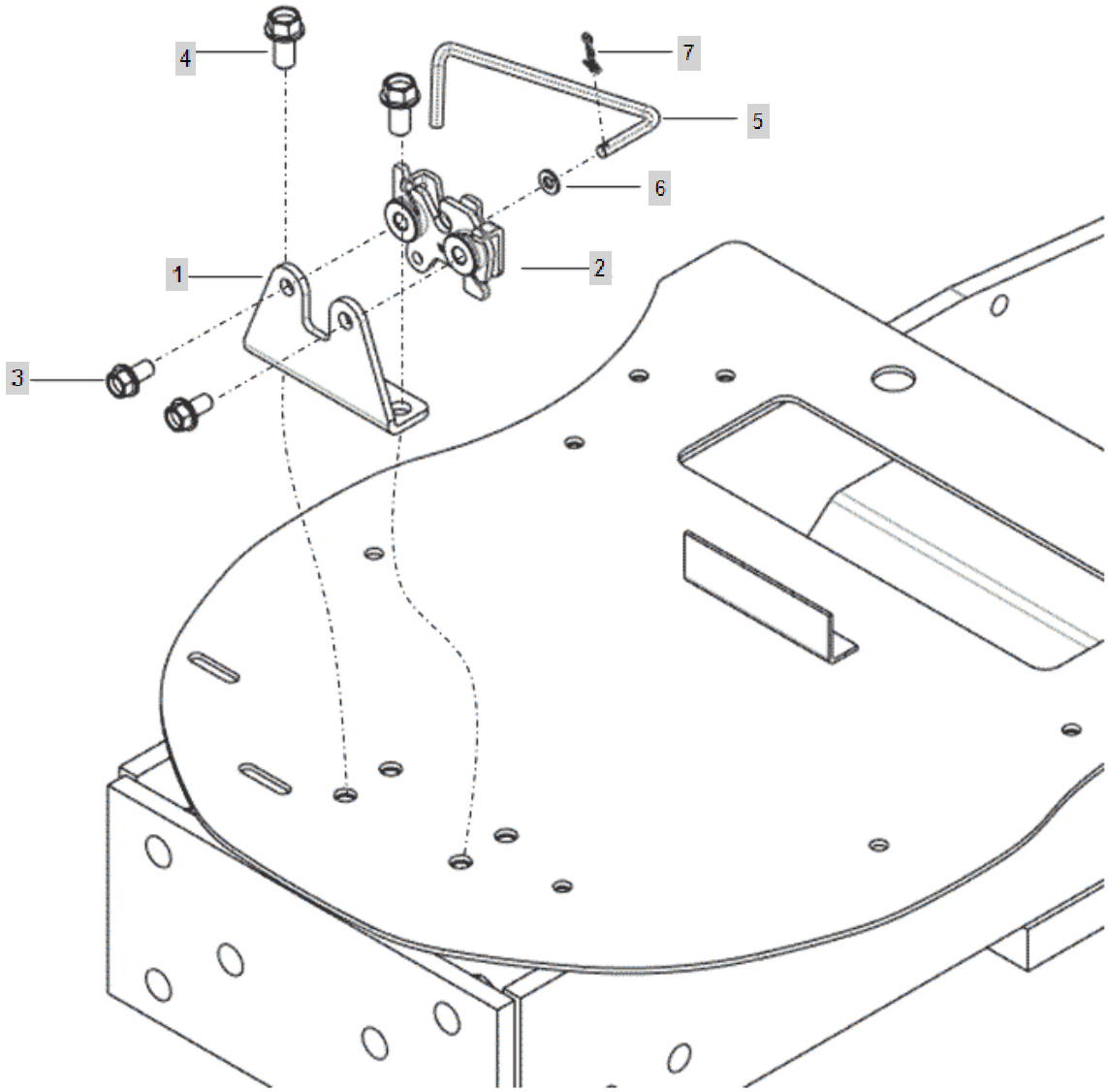

FIG C136-2 4015R	136. LOCKING ASS'Y, BONNET	Year/Month 2020/01

KeyNo.	Part Number	Part Name	Quantity	Other
1	TA00053544A	LATCH BRACKET	1	
2	TA00053140A	LATCH ASSY	1	
3	26106-080162	SCREW,HEXFLANGEHEADCAP	2	
4	26106-100202	HEX BOLT, (10-20)	2	
5	TA00059551A	ROAD	1	
6	22137-060000	WASHER , PLAIN	1	
7	RR47070000A	PIN 6, COME-OFF SNAP	1	

FIG C137-1 4015R	137. BONNET SUPPORT	Year/Month 2020/01

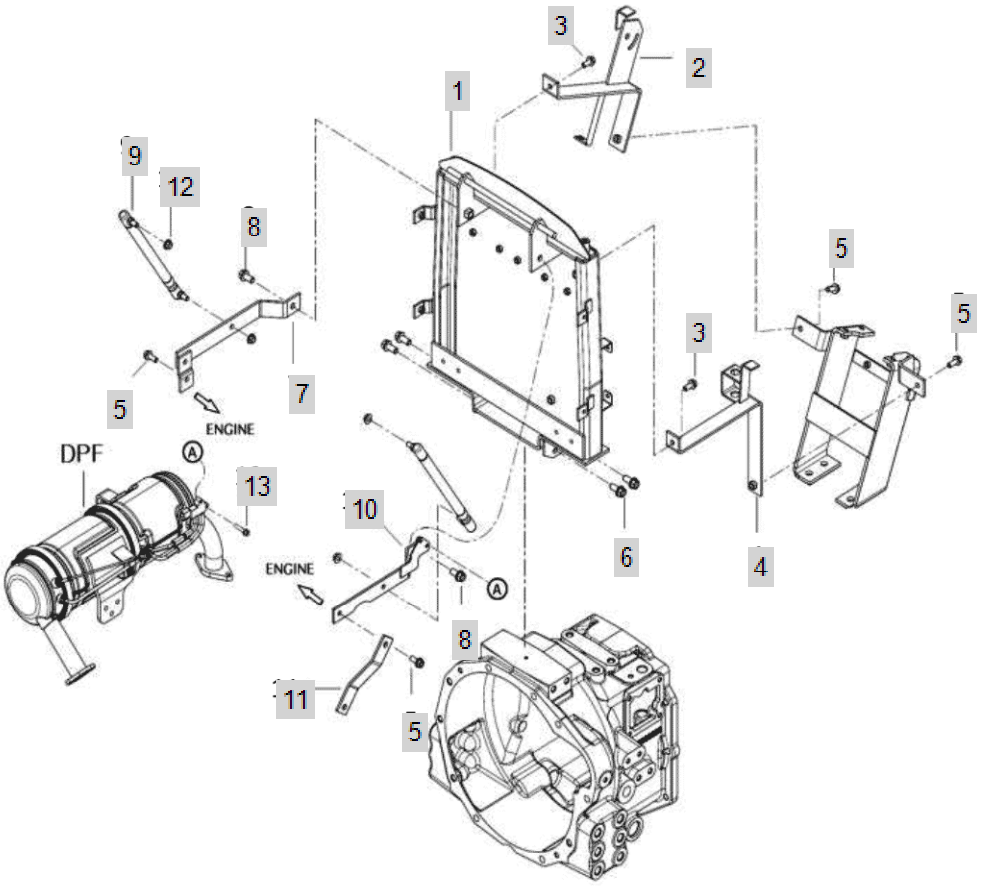

FIG C137-1 4015R	137. BONNET SUPPORT	Year/Month 2020/01

KeyNo.	Part Number	Part Name	Quantity	Other
1	TA00040882G	HINGE SUPPORT, BONNET	1	
2	TA00040876D	BRACKET R, SUPPORT	1	
3	26106-080182	SCREW,HEXFLANGEHEADCAP	2	
4	TA00040868D	BRACKET L, SUPPORT	1	
5	26106-080202	SQR FLANGE BOLT	3	
6	26106-100222	BOLT	4	
7	TA00040848A	BRACKET L	1	
8	26106-100202	HEX BOLT, (10-20)	2	
9	TA00041773A	GAS SPRING	2	
10	TA00040849B	BRACKET L	1	
11	TA00040850A	BRACKET	1	
12	26367-080002	HEX FLANGE NUT (Φ8)	4	
13	26106-060252	Screw, (6-25)	2	

FIG C137A-2 4015R	137. BONNET SUPPORT(2018.02)	Year/Month 2020/01

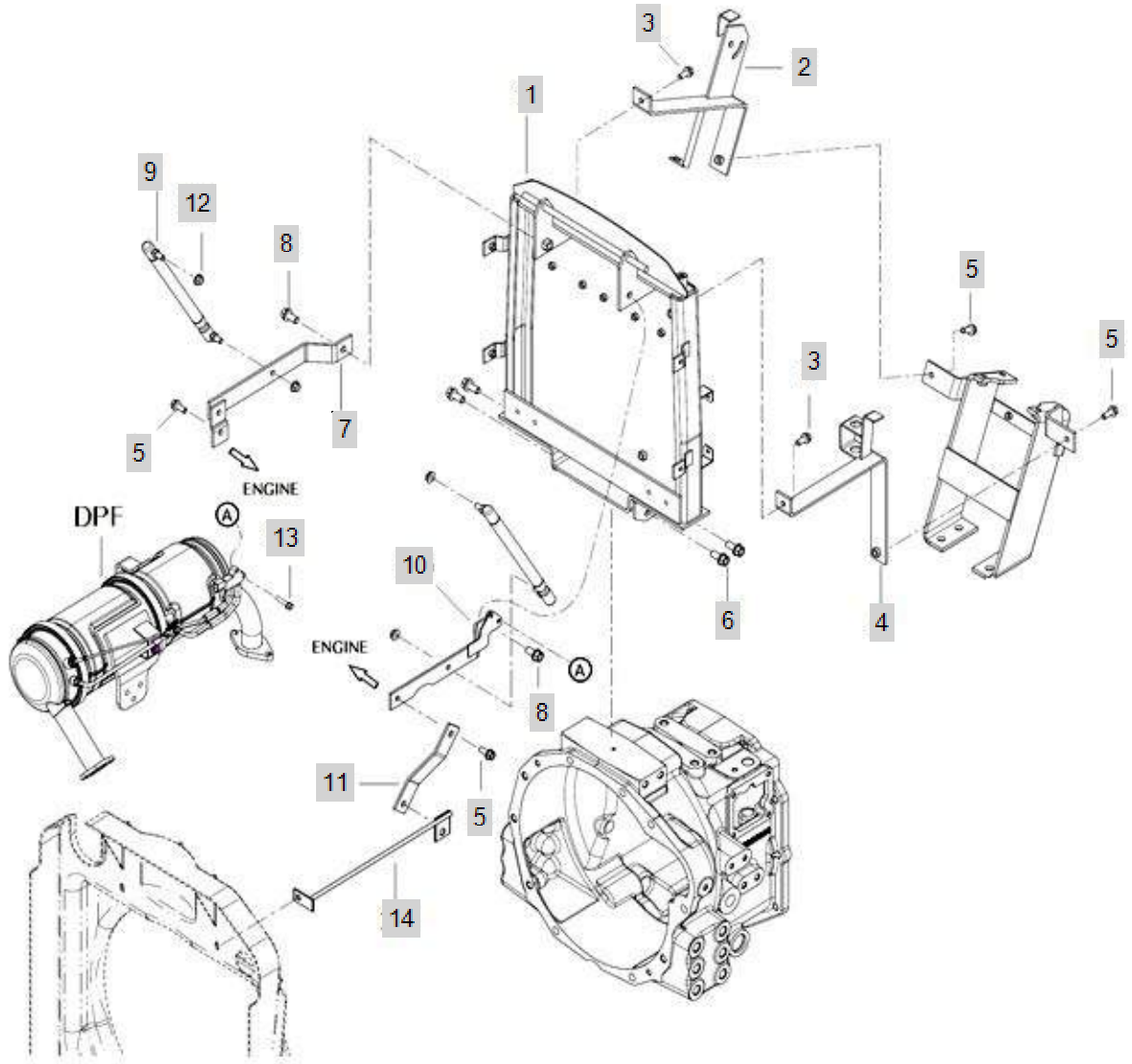

FIG C137A-2 4015R	137. BONNET SUPPORT(2018.02)	Year/Month 2020/01

KeyNo.	Part Number	Part Name	Quantity	Other
1	TA00040882G	HINGE SUPPORT, BONNET	1	
2	TA00040876D	BRACKET R, SUPPORT	1	
3	26106-080182	SCREW,HEXFLANGEHEADCAP	2	
4	TA00040868D	BRACKET L, SUPPORT	1	
5	26106-080202	SQR FLANGE BOLT	3	
6	26106-100222	BOLT	4	
7	TA00040848A	BRACKET L	1	
8	26106-100202	HEX BOLT, (10-20)	2	
9	TA00041773A	GAS SPRING	2	
10	TA00040849B	BRACKET L	1	
11	TA00040850A	BRACKET	1	
12	26367-080002	HEX FLANGE NUT (Φ8)	4	
13	26106-060252	Screw, (6-25)	2	
14	TA00041934B	SUPPORT ASSY(T4)	1	

FIG C137B 4015R	137. BONNET SUPPORT	Year/Month 2020/01

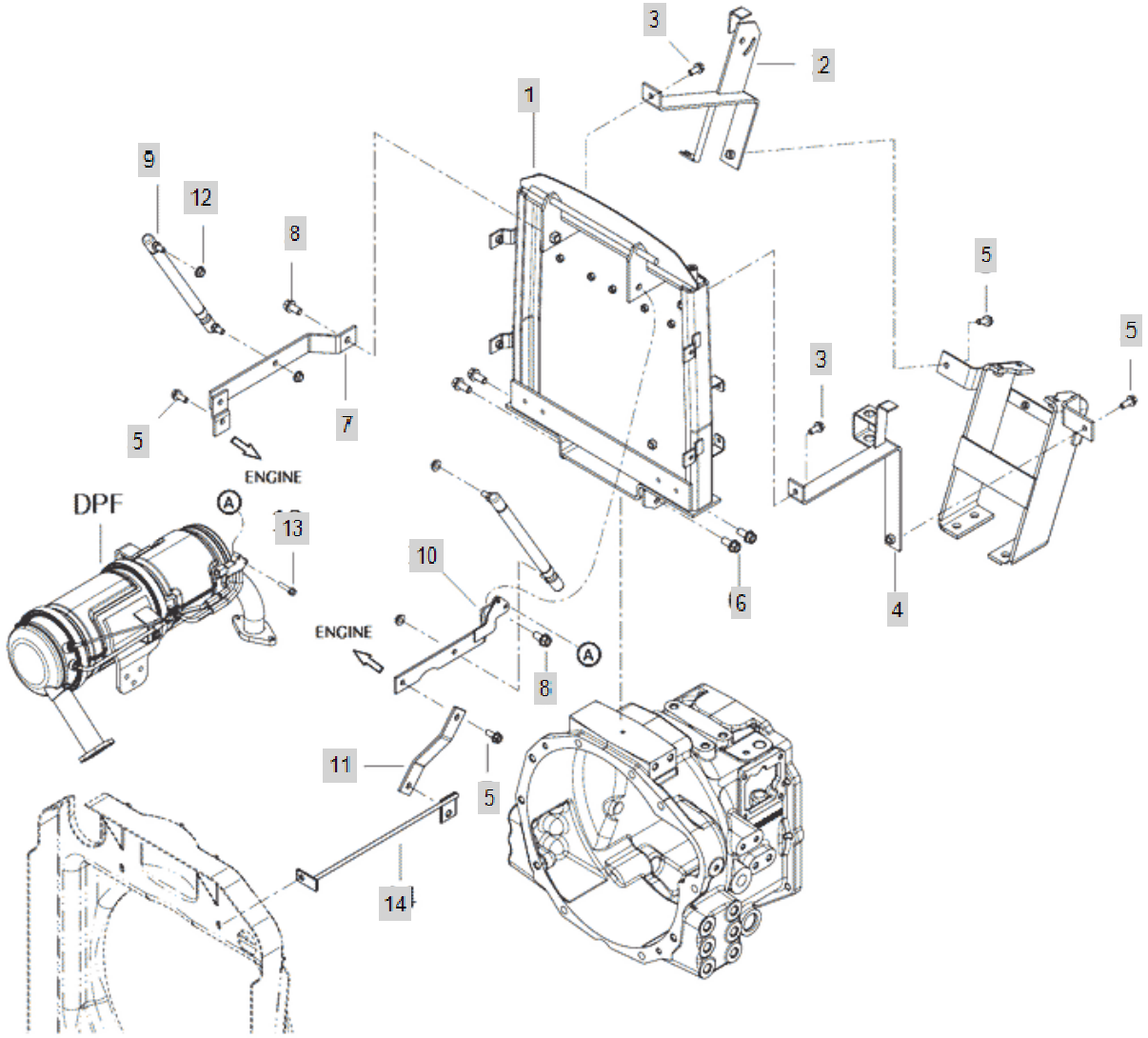

FIG C137B 4015R	137. BONNET SUPPORT	Year/Month 2020/01

KeyNo.	Part Number	Part Name	Quantity	Other
1	TA00040882G	HINGE SUPPORT, BONNET	1	
2	TA00040876D	BRACKET R, SUPPORT	1	
3	26106-080182	SCREW,HEXFLANGEHEADCAP	2	
4	TA00040868D	BRACKET L, SUPPORT	1	
5	26106-080202	SQR FLANGE BOLT	3	
6	26106-100222	BOLT	4	
7	TA00040848A	BRACKET L	1	
8	26106-100202	HEX BOLT, (10-20)	2	
9	TA00041773A	GAS SPRING	2	
10	TA00040849B	BRACKET L	1	
11	TA00040850A	BRACKET	1	
12	26367-080002	HEX FLANGE NUT (Φ8)	4	
13	26106-060252	Screw, (6-25)	2	
14	TA00041934B	SUPPORT ASSY(T4)	1	

FIG C138 4015R	138. FENDER	Year/Month 2020/01

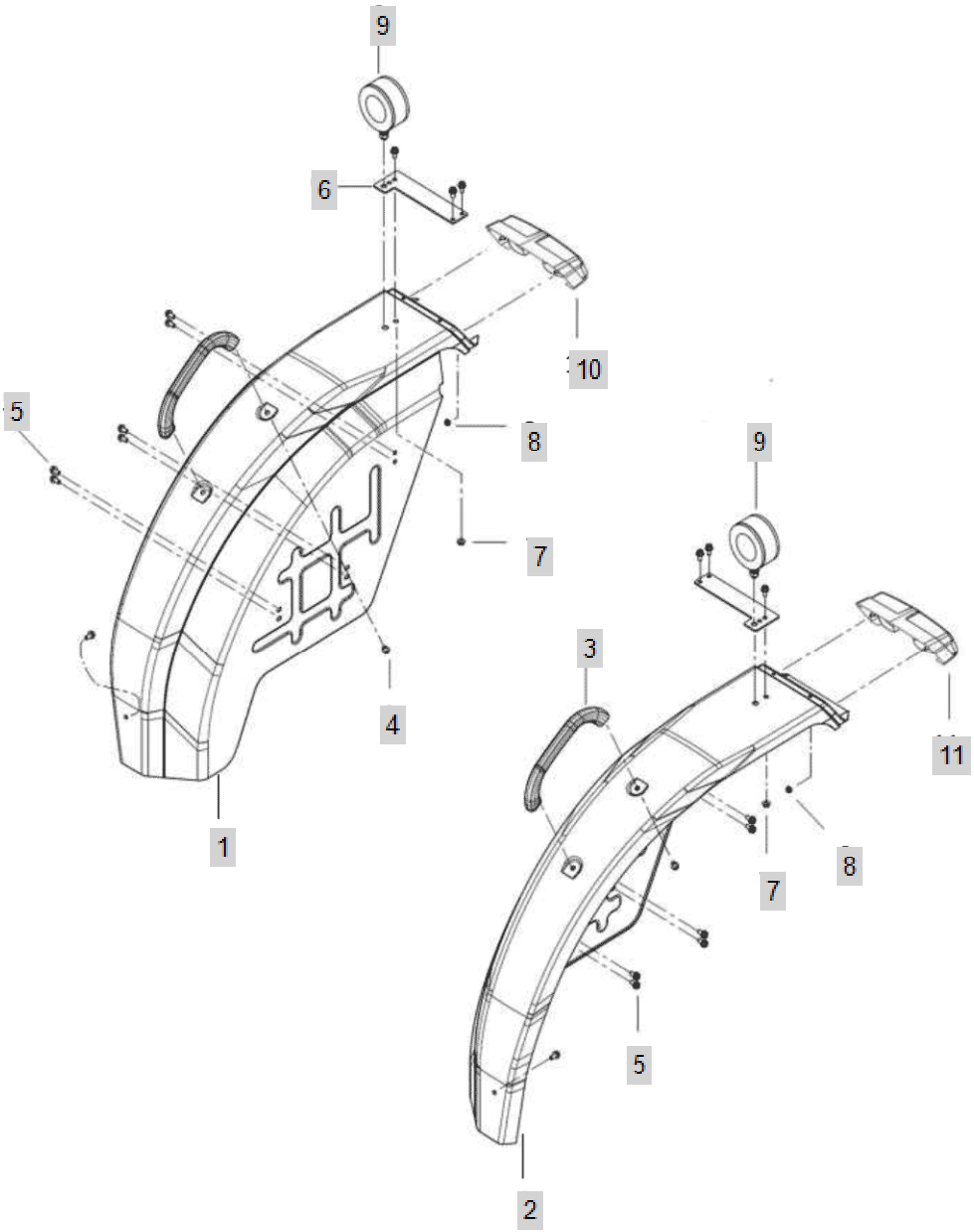

FIG C138 4015R	138. FENDER	Year/Month 2020/01

KeyNo.	Part Number	Part Name	Quantity	Other
1	TA00040568B	FENDER R ASSY	1	
2	TA00039644C	FENDER L ASSY	1	
3	NTD8120000A3	FENDERGRIP	2	
4	26106-080122	Bolt, Hexa (8-12)	4	
5	26106-080162	SCREW,HEXFLANGEHEADCAP	20	
6	TA00039326B	FENDER BRK	2	
7	26367-080002	HEX FLANGE NUT (Φ8)	2	
8	26367-060002	Nut, Hexa (Φ6)	4	
9	TZD2120000C	DIRECTION LAMP ASS'Y	2	
10	NTD2170000A		1	
11	NTD2160000A		1	

FIG C139 4015R	139. FOOT REST ASS'Y	Year/Month 2020/01

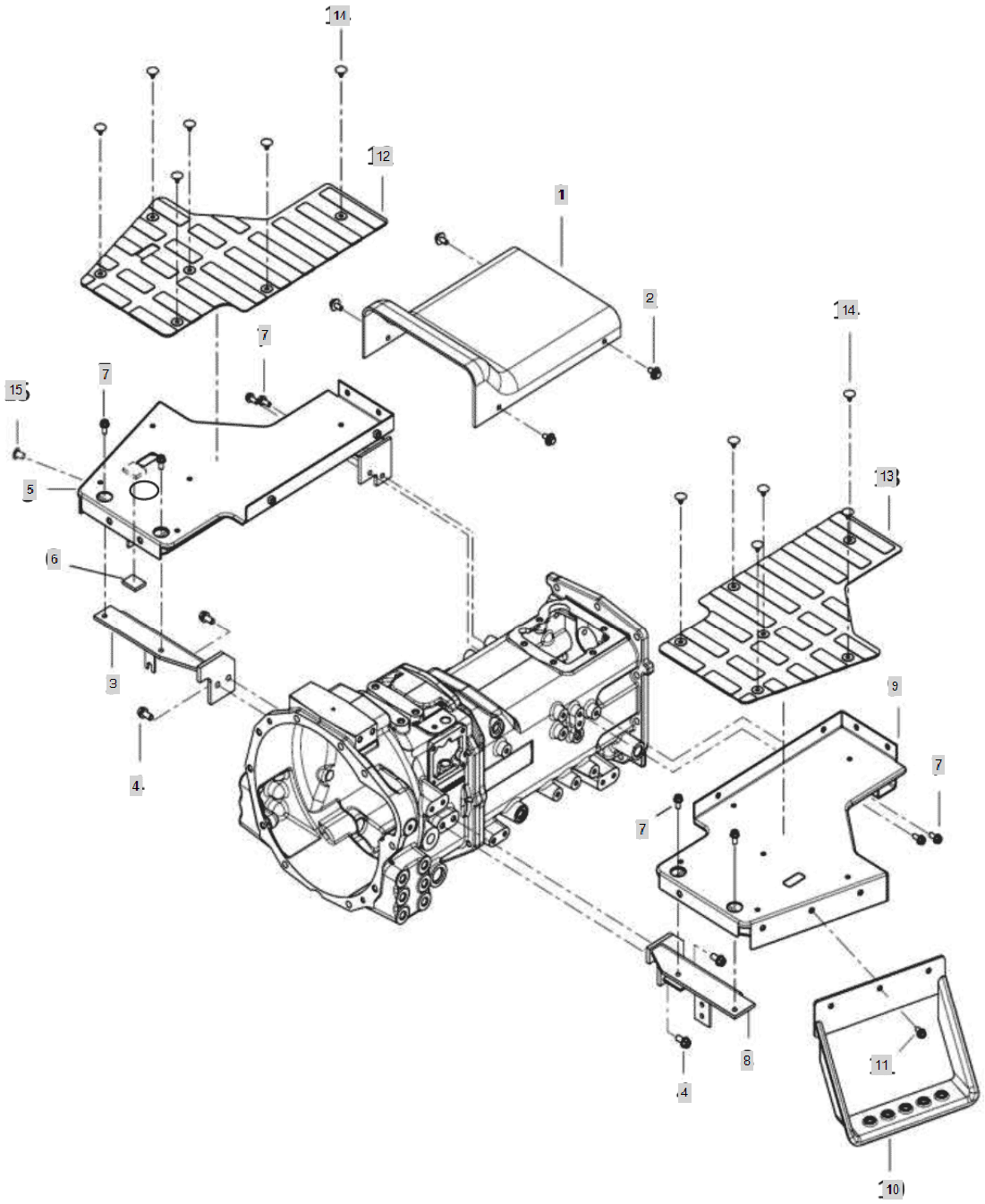

FIG C139 4015R	139. FOOT REST ASS'Y	Year/Month 2020/01

KeyNo.	Part Number	Part Name	Quantity	Other
1	TA00039302C	COVER	1	
2	26014-080202	Bolt, Hexa (8-20)	4	
3	TA00039637B	SUPPORT ASS'Y(RH)	1	
4	26106-100202	HEX BOLT, (10-20)	4	
5	TA00039344E	FOOT REST ASS'Y(R)	1	
6	TA00018661A	PIPE	1	
7	26106-080182	SCREW,HEXFLANGEHEADCAP	8	
8	TA00039438B	SUPPORT(LH)	1	
9	TA00039343B	FOOT REST ASS'Y(L)	1	
10	TA00042391A	SUPPORT FOOT REST ASS'Y	1	
11	26106-080162	SCREW,HEXFLANGEHEADCAP	3	
12	TA00040596B	MAT,FOOT REST	1	
13	TA00040393B	MAT	1	
14	TTE0400000A4	CAP	12	
15	TB26060000A4	PLUGRUBBER	3	

FIG C140 4015R	140. SEAT	Year/Month 2020/01

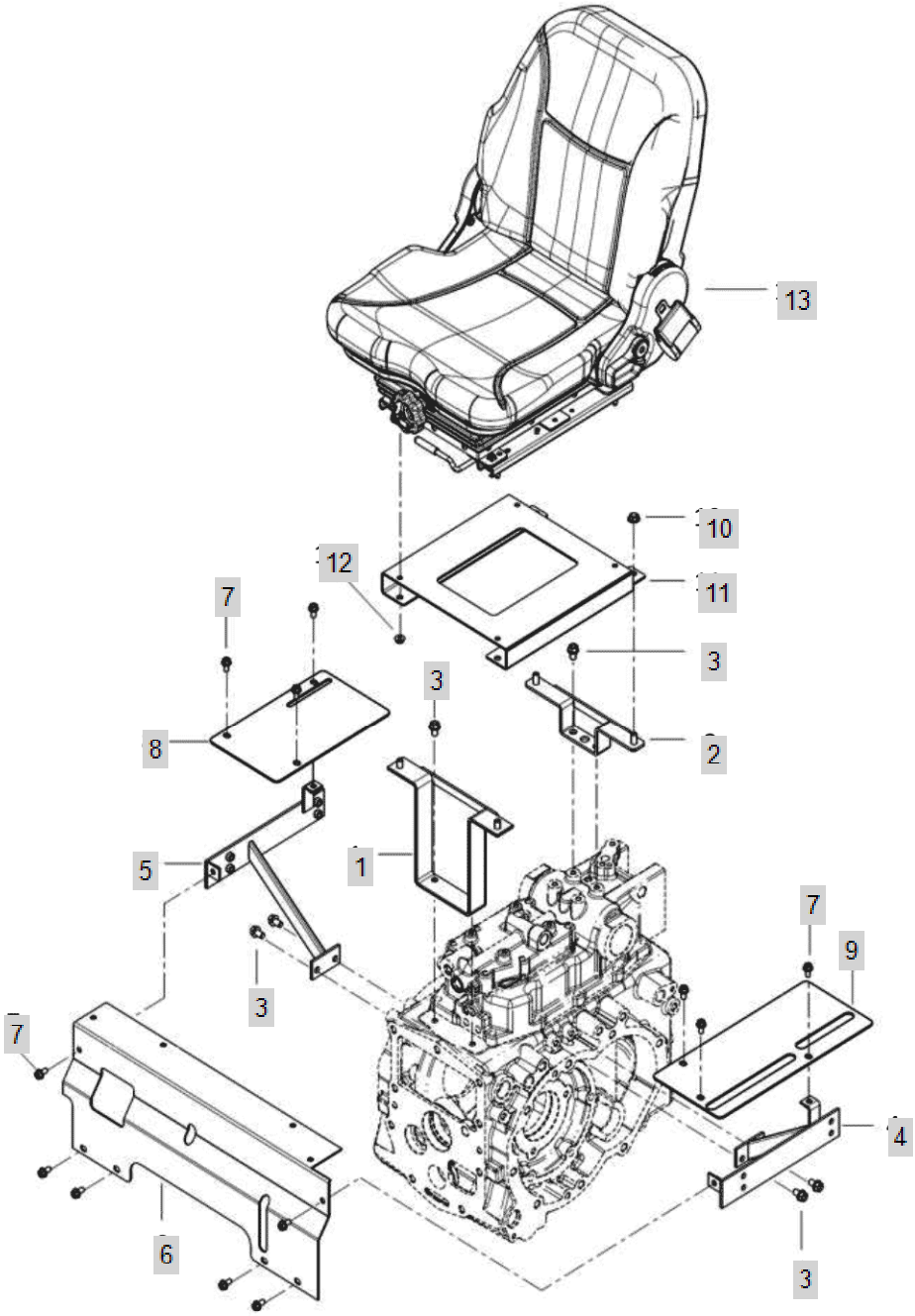

FIG C140 4015R	140. SEAT	Year/Month 2020/01

KeyNo.	Part Number	Part Name	Quantity	Other
1	TA00039024C	FRONT BRACKET ASS'Y	1	
2	TA00034064C	BRACKET ASS'Y	1	
3	26106-100162	SCREW,HEXFLANGEHEADCAP	8	
4	TA00039082C	BRACKET ASS'Y, COVER	1	
5	TA00039075D	BRACKET ASS'Y, COVER	1	
6	TA00039085C	COVER ASS'Y,DUST	1	
7	26106-080162	SCREW,HEXFLANGEHEADCAP	12	
8	TA00041792A	LEVER COVER	1	
9	TA00039081C	COVER, LEVER(RANGE SHIFT)	1	
9-1	TA00039081C	COVER, LEVER(RANGE SHIFT)	1	
10	26367-100002	NUT,HEXAGONFLANGE	4	
11	TA00041888A	SEAT_BRAKET(EU)	1	
12	26367-080002	HEX FLANGE NUT (Φ8)	4	
13	TA00056688B	SEAT ASS'Y	1	
13-1	TA00041470A	SEAT ASS'Y(US)	4	

FIG C141A-1 4015R	141. FUEL TANK	Year/Month 2020/01

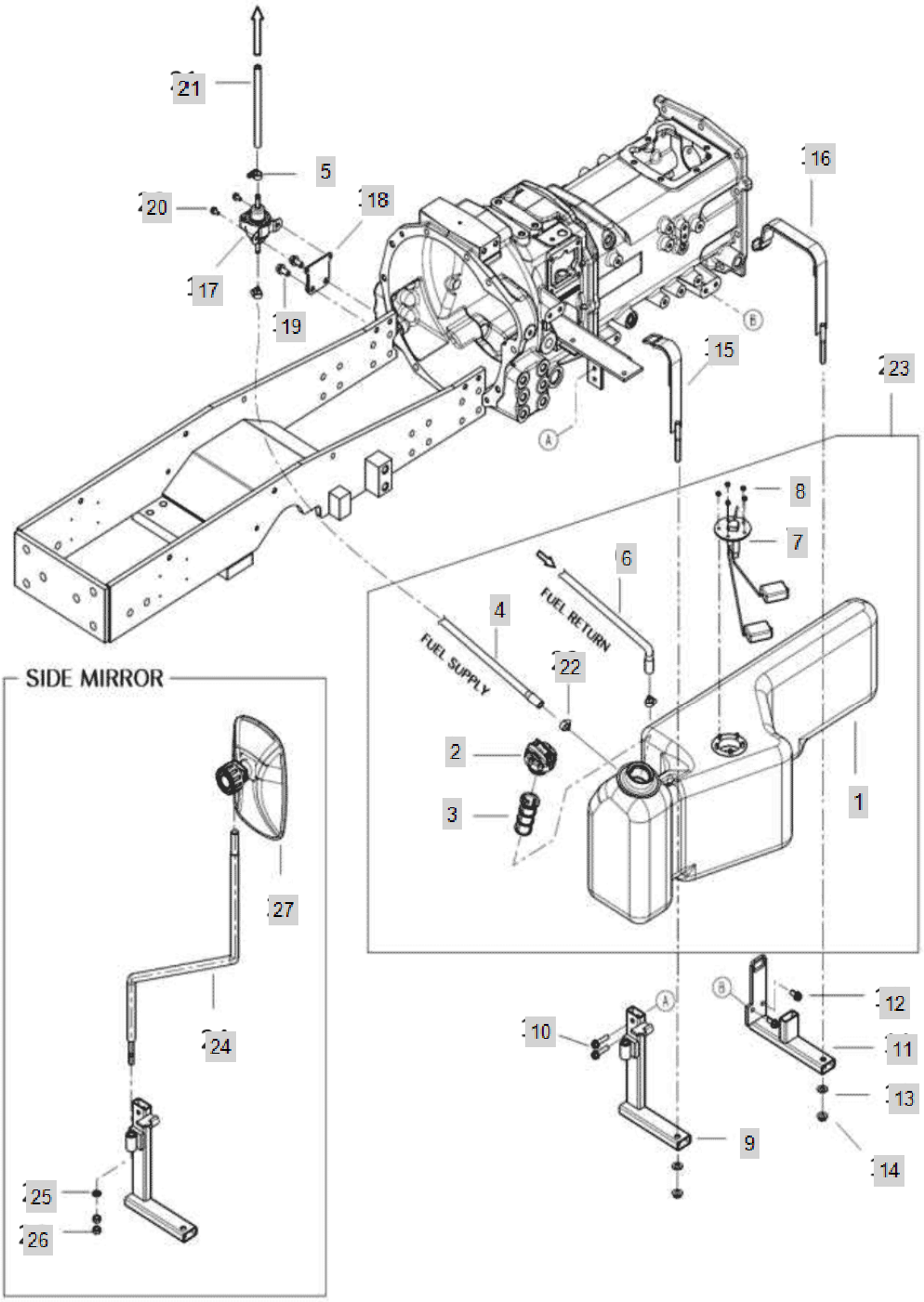

FIG C141A-1 4015R	141. FUEL TANK	Year/Month 2020/01

KeyNo.	Part Number	Part Name	Quantity	Other
1	TA00039460B	FUEL TANK	1	
2	TA00037880A	FUEL CAP	1	
3	TA00056576A	FUEL TANK STRAINER	1	
3-1	TA00027741A	FILTER STRAINER	1	
4	TA00041750A	FUEL LINE(750)	1	
5	23080-013000	Clamp, Hose (Φ13)	3	
6	TA00041751A	FUEL LINE(1000)	1	
7	HA00000977B	FUEL SENSOR	1	
8	26712-050002	NUTM5	5	
9	TA00040157A	FRONT SUPPORT	1	
10	26106-080352	SCREW,HEXFLANGEHEADCAP	2	
11	TA00040154B	REAR SUPPORT	1	
12	26106-080182	SCREW,HEXFLANGEHEADCAP	2	
13	22137-100000	WASHER, PLAIN (Φ 10)	2	
14	26367-100002	NUT,HEXAGONFLANGE	2	
15	TA00040222B	FRONT BAND ASSY	1	
16	TA00040215B	REAR BAND	1	
17	HF20190000A2	FUEL FEED PUMP	1	
18	TC51420000B	STAY ASS'Y, PUMP	1	
19	26106-100202	HEX BOLT, (10-20)	2	
20	26106-060122	HEX BOLT (6-12)	2	
21	TA00055013A	HOSE_FUEL	1	
21-1	TA00048401A	FUEL HOSE (165)	1	delete
22	23080-015000	Clamp, Hose (Φ15)	2	
23	TA00040370E	TANK, FUEL ASSY	1	
24	TA00040824C	STAY, BACK MIRROR	1	
25	22217-100000	WASHER, SPRING (Φ 10)	1	
26	26716-100002	Nut, Hexa (Φ10)	2	
27	TCF5170000B		1	

FIG C141A-2 4015R	141. FUEL TANK	Year/Month 2020/01

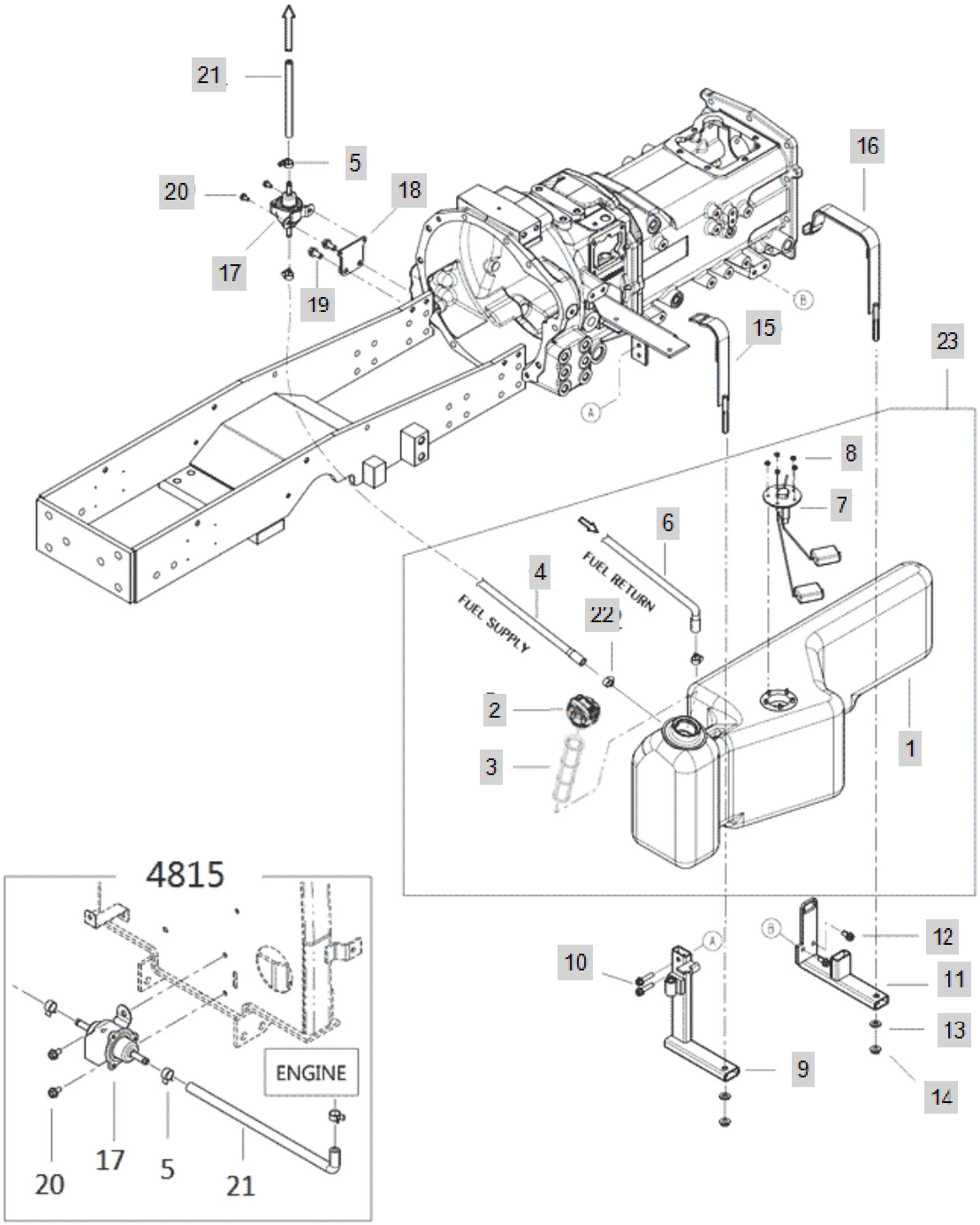

FIG C141A-2 4015R	141. FUEL TANK	Year/Month 2020/01

KeyNo.	Part Number	Part Name	Quantity	Other
1	TA00039460B	FUEL TANK	1	
2	TA00037880A	FUEL CAP	1	
3	TA00056576A	FUEL TANK STRAINER	1	
4	TA00041750A	FUEL LINE(750)	1	
5	23080-013000	Clamp, Hose (Φ13)	3	
6	TA00041751A	FUEL LINE(1000)	1	
7	HA00000977B	FUEL SENSOR	1	
8	26712-050002	NUTM5	5	
9	TA00040157A	FRONT SUPPORT	1	
10	26106-080352	SCREW,HEXFLANGEHEADCAP	2	
11	TA00040154B	REAR SUPPORT	1	
12	26106-080182	SCREW,HEXFLANGEHEADCAP	2	
13	22137-100000	WASHER, PLAIN (Φ 10)	2	
14	26367-100002	NUT,HEXAGONFLANGE	2	
15	TA00040222B	FRONT BAND ASSY	1	
16	TA00040215B	REAR BAND	1	
17	HF20190000A2	FUEL FEED PUMP	1	
18	TC51420000B	STAY ASS'Y, PUMP	1	
19	26106-100202	HEX BOLT, (10-20)	2	
20	26106-060122	HEX BOLT (6-12)	2	
21	TA00048401A	FUEL HOSE (165)	1	
22	23080-015000	Clamp, Hose (Φ15)	2	
23	TA00040370E	TANK, FUEL ASSY	1	

FIG C144D 4015R	144. NAME PLATE	Year/Month 2020/01

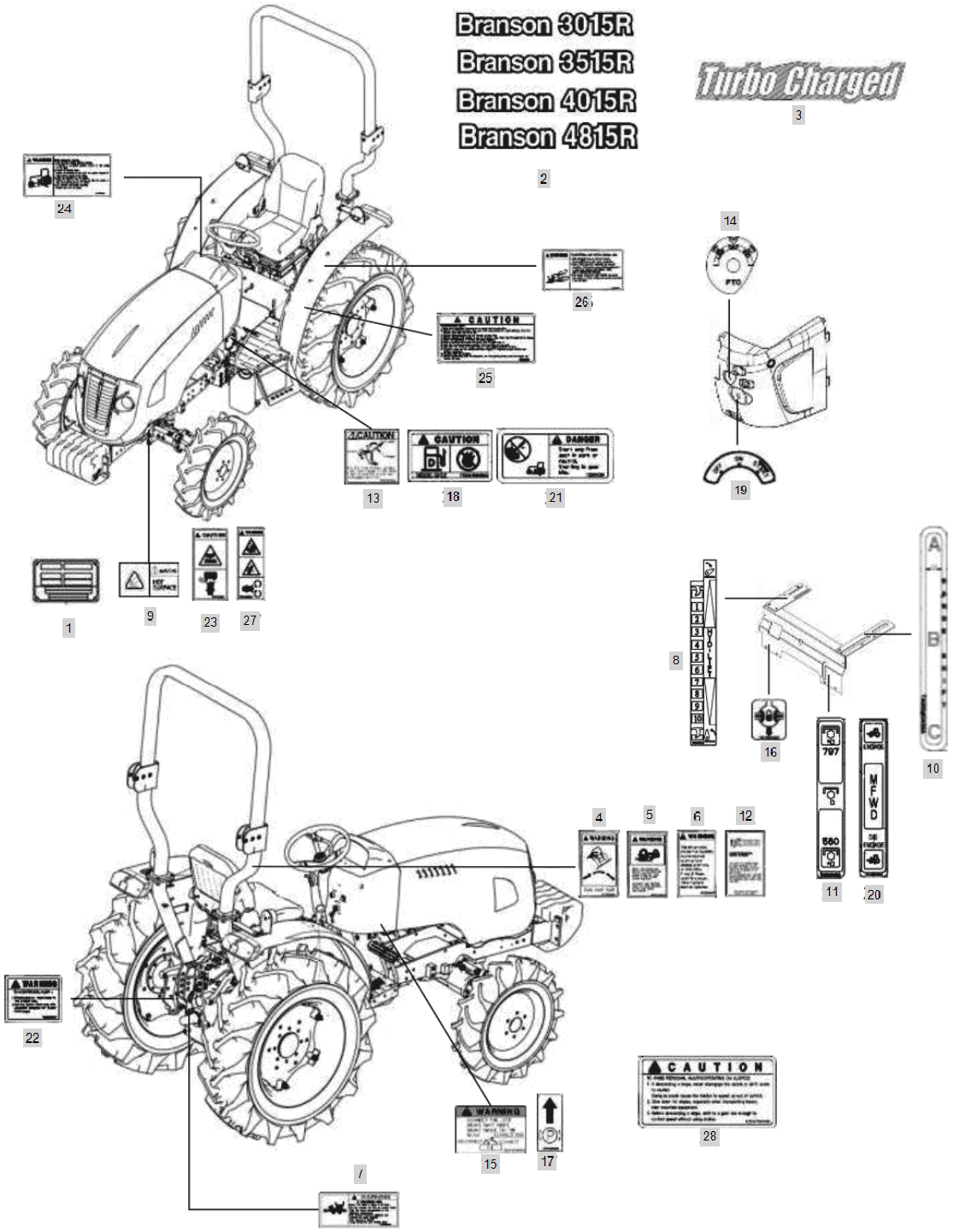

FIG C144D 4015R	144. NAME PLATE	Year/Month 2020/01

KeyNo.	Part Number	Part Name	Quantity	Other
1	TA00040540A	NAME PLATE	1	
2	TA00040536C	BONNET, NAME PLATE	2	
3	TA00029063A	DECAL, TURBO CHARGED	2	
4	NTE5150000C4	NAMEPLATE,SEATBELT	1	
5	NTE5210000C4	NAMEPLATE,SAFETY	1	
6	NTE5220000C4	NAMEPLATE,DANGER	1	
7	TA00015596B	PTO WARNING PLATE	1	
8	TA00036922A	LIFT STICKER	1	
9	TA00036924A	WARNING NAMEPLAET	1	
10	TA00040422A	NAME PLATE, SUB SHIFT	1	
11	TA00061888A	NAME PLATE, PTO SHIFT	1	
11-1	TA00058176A	NAME PLATE, PTO SHIFT	1	DELETE
11-2	TA00040423B	NAME PLATE, PTO	1	DELETE
12	TA00040534A	ROPS, NAME PLATE	1	
13	TA00040603A	NAMEPLATE, CLUTCH	1	
14	TA00041042A	NAME PLATE	1	
15	TZE4100000B4	LABEL,BRAKEPEDAL	1	
16	TZE4130000B4	LABEL,DIFFERENTIAL	1	
17	TZE4150000A4	LABEL, PAKING BRAKE	1	
18	TZE4190000C4	LABEL, FUEL CAUTION	1	
19	TZE4330000B4	MARK, MAIN SWITCH	1	
20	TZE5050000B4	LABEL,FRONTDRIVE	1	
21	TZE5110000C4	MANE PLATE, START	1	
22	TZE5120000B4	NAME PLATE, EQUIP	1	
23	TZE5130000C4	NAME PLATE, CAUTION	1	
24	TZE5140000B3	NAME PLATE, DOWN LOAD	1	
25	TZE5160000B3	NAME PLATE, SAFETY	1	
26	TZE5170000B3	NAME PLATE, ROPS CAUTION	1	
27	TZE5180000C4	NAME PLATE, REVOLUTION	1	
28	TZE5770000B3	MARK,WARNING	1	

FIG C146-1 4015R	146. TOP LINK, LIFT LINK	Year/Month 2020/01

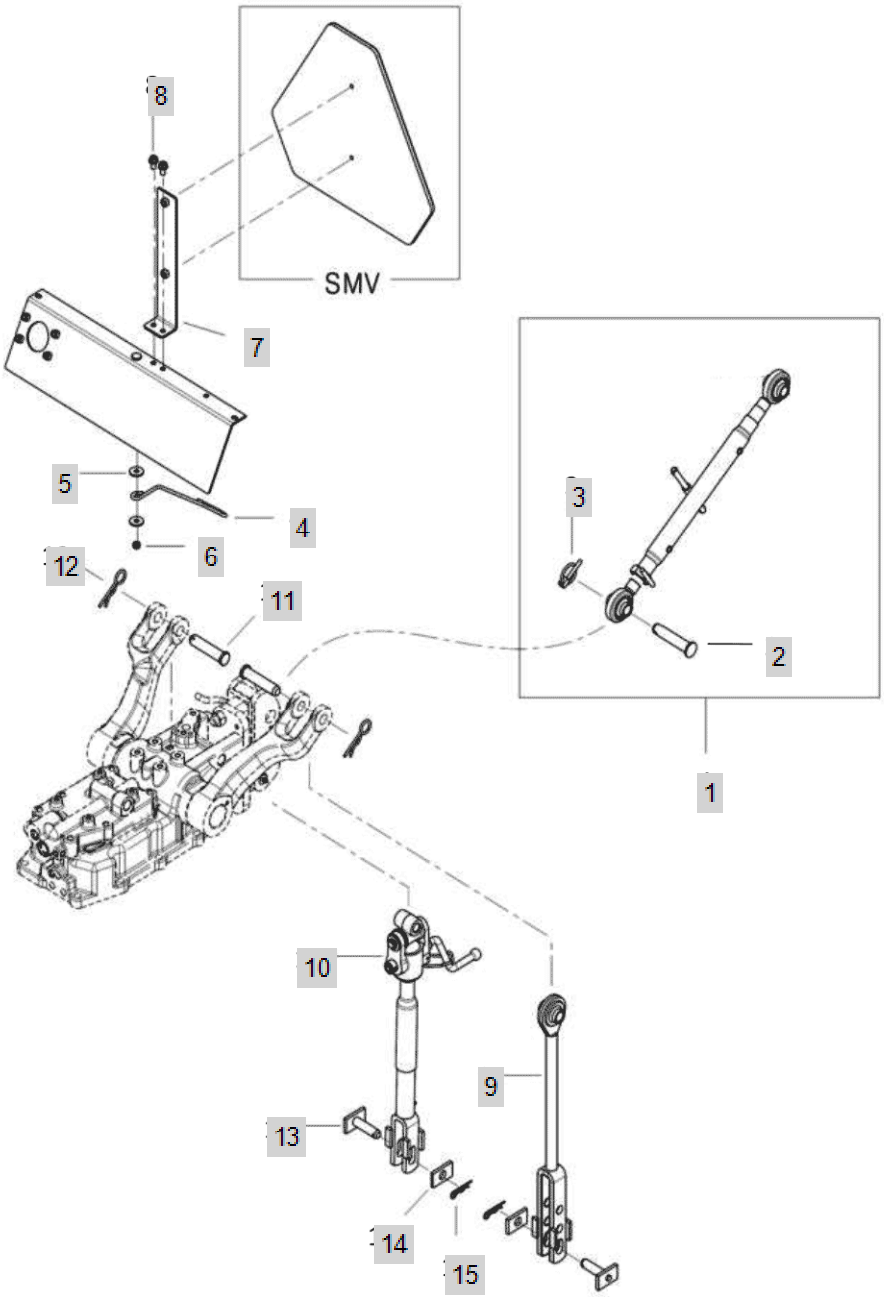

FIG C146-1 4015R	146. TOP LINK, LIFT LINK	Year/Month 2020/01

KeyNo.	Part Number	Part Name	Quantity	Other
1	TA00039541C	TOP LINK	1	
2	TTE6130000B4	PIN	1	
3	TJ30110000A	PIN SET -> TJ30110000A4	1	
4	TA00047007B	HOOK(TOPLINK)	1	
4-1	TCG1130000B	HOOK (TOP LINK)	1	
5	22157-080000	WASHER, PLAIN (Φ 08)	2	
6	26347-080002	Unut	1	
7	TA00039355B	SMV BRK ASSY	1	
8	26106-080162	SCREW,HEXFLANGEHEADCAP	2	
9	TA00040653B	LOWER FRAME ASSY (RH)	1	
10	TA00040654A	LIFT LINK ASS'Y(R)	1	
11	TTE7290000B	PIN	2	
12	TTE7010000A4	SNAPPIN	2	
13	TTE73000INA4	LIFT YORK PIN	2	
14	TTE7310000A4	STOPPER	2	
15	22360-160000	PIN , SNAP (6Φ)	2	

FIG C146-2 4015R	146. TOP LINK, LIFT LINK	Year/Month 2020/01

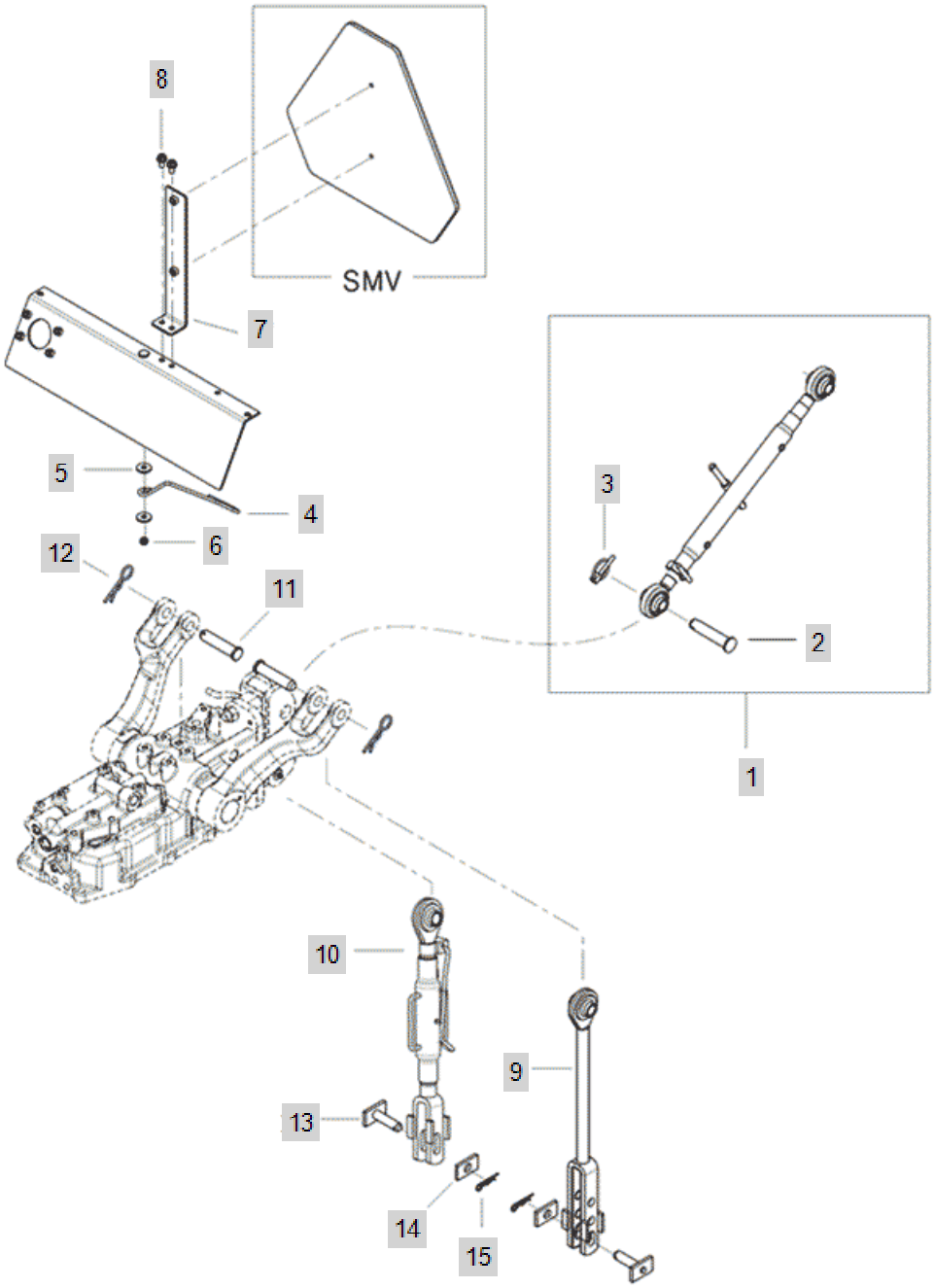

FIG C146-2 4015R	146. TOP LINK, LIFT LINK	Year/Month 2020/01

KeyNo.	Part Number	Part Name	Quantity	Other
1	TA00039541C	TOP LINK	1	
2	TTE6130000B4	PIN	1	
3	TJ30110000A	PIN SET -> TJ30110000A4	1	
4	TA00047007B	HOOK(TOPLINK)	1	
5	22157-080000	WASHER, PLAIN (Φ 08)	2	
6	26347-080002	Unut	1	
7	TA00039355B	SMV BRK ASSY	1	
8	26106-080162	SCREW,HEXFLANGEHEADCAP	2	
9	TA00040653B	LOWER FRAME ASSY (RH)	1	
10	TA00058924A	LIFT LINK ASSY(RH)	1	
11	TTE7290000B	PIN	2	
12	TA00059528A	SNAP PIN	2	
13	TTE73000INA4	LIFT YORK PIN	2	
14	TTE7310000A4	STOPPER	2	
15	TA00059528A	SNAP PIN	2	

FIG C150 4015R	150. LOWER LINK	Year/Month 2020/01

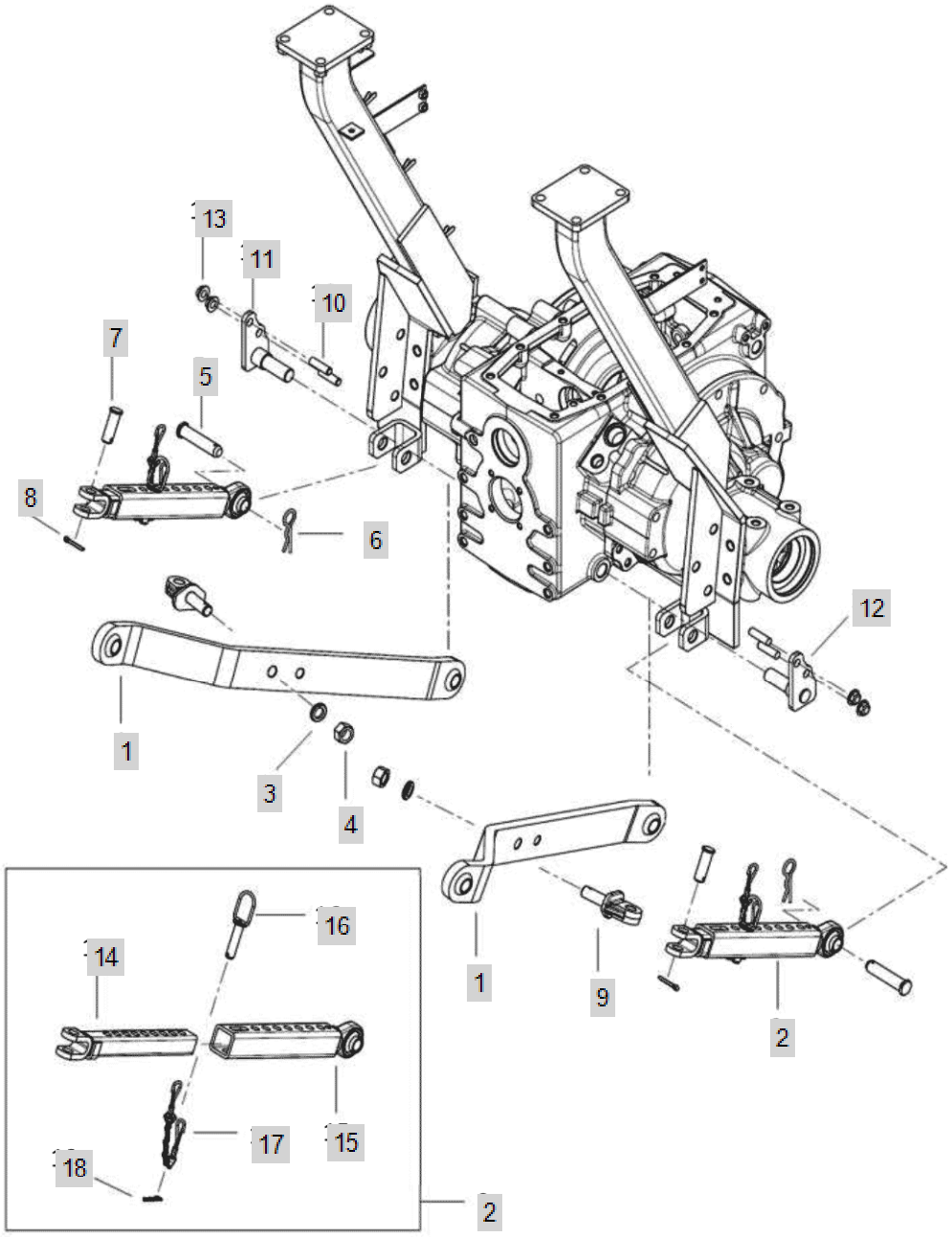

FIG C150 4015R	150. LOWER LINK	Year/Month 2020/01

KeyNo.	Part Number	Part Name	Quantity	Other
1	TA00042369A	LINK ASS'Y, LOWER	2	
2	TA00041947B	CHECK-BAR	2	
3	22217-180000	WASHER, SPRING (Φ 18)	2	
4	26736-180002	NUT	2	
5	TTE7290000B	PIN	2	
6	TA00059528A	SNAP PIN	2	
6-1	TTE7010000A4	SNAPPIN	2	DELETE
7	FTF0090000A4	PIN, CHECK CHAIN	2	
8	22417-500320	PIN , COTTER (5-32)	2	
9	TA00016119A	EYE BOLT, LOWER LINK	2	
10	26216-120252	STUD BOLT	4	
11	TA00039356B	LOWER LINK PIN LH ASSY	1	
12	TA00039490B	LOWER LINK PIN RH ASSY	1	
13	26367-120002	NUT	4	
14	TA00041949A	CHECKBAR R	2	
15	TA00041948B	CHECKBAR F	2	
16	FBF0050000A4	CONNECT PIN -> FBF0020000A2	2	
17	FBF0060000A4	CONNECT LINK	2	
18	22360-140000	PIN , SNAP (4Φ)	2	

FIG C152 4015R	152. DRAWBAR HITCH	Year/Month 2020/01

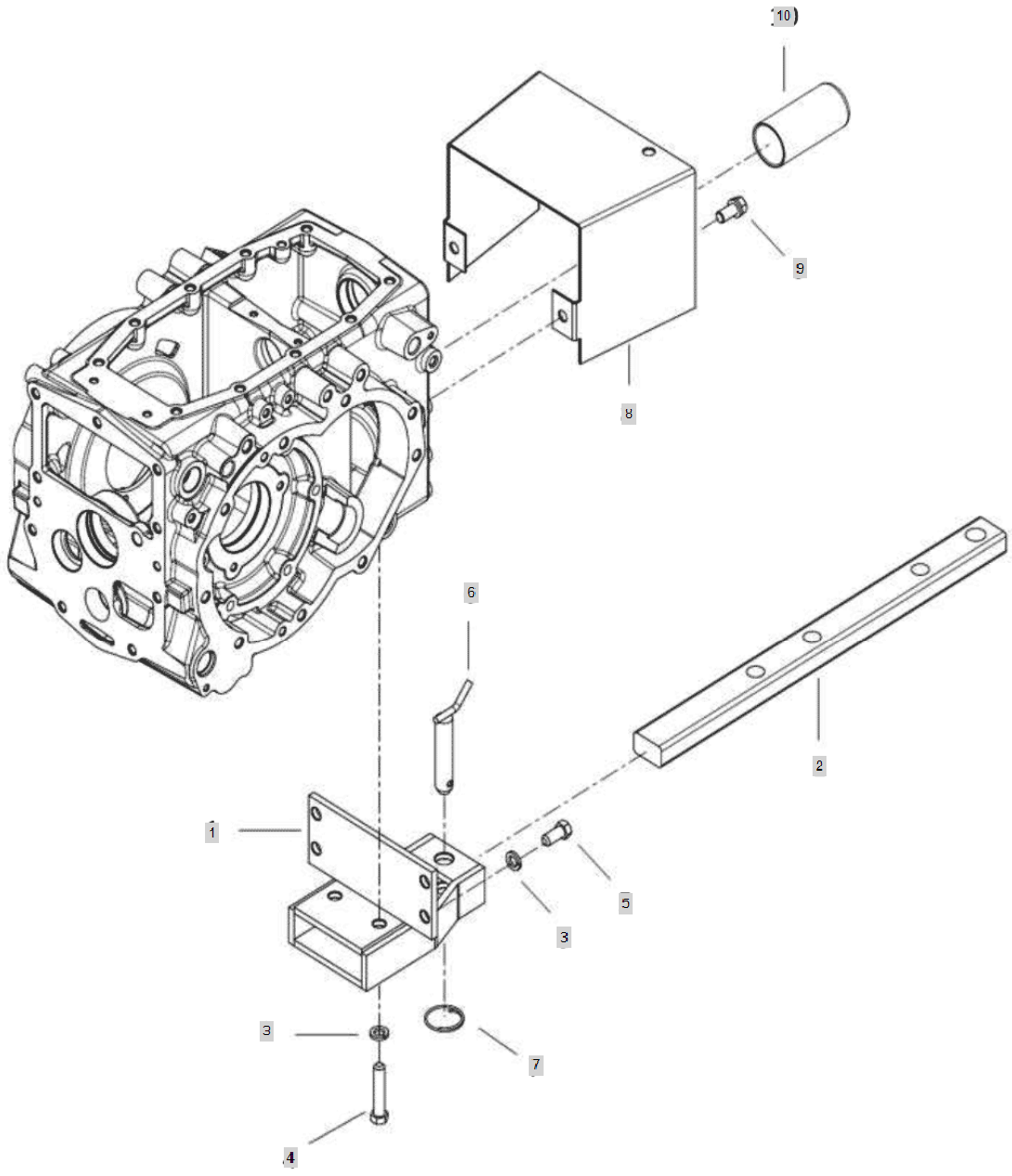

FIG C152 4015R	152. DRAWBAR HITCH	Year/Month 2020/01

KeyNo.	Part Number	Part Name	Quantity	Other
1	TA00039407A	DRAWBAR BRK ASSY	1	
2	NTF20100INB		1	
3	22217-140000	WASHER, SPRING (Φ 14)	6	
4	26116-140802	BOLT	2	
5	26116-140302	HEXBOLT	4	
6	TB46060000A4	HITCHPIN22	1	
7	TB46070000A		1	
8	TA00039391B	PTO COVER	1	
9	26013-140302	BOLT(+SW)	2	
10	TA00046868A	COVER, PTO	1	

FIG C158-1 4015R	158. ROPS FRAME ASS'Y	Year/Month 2020/01

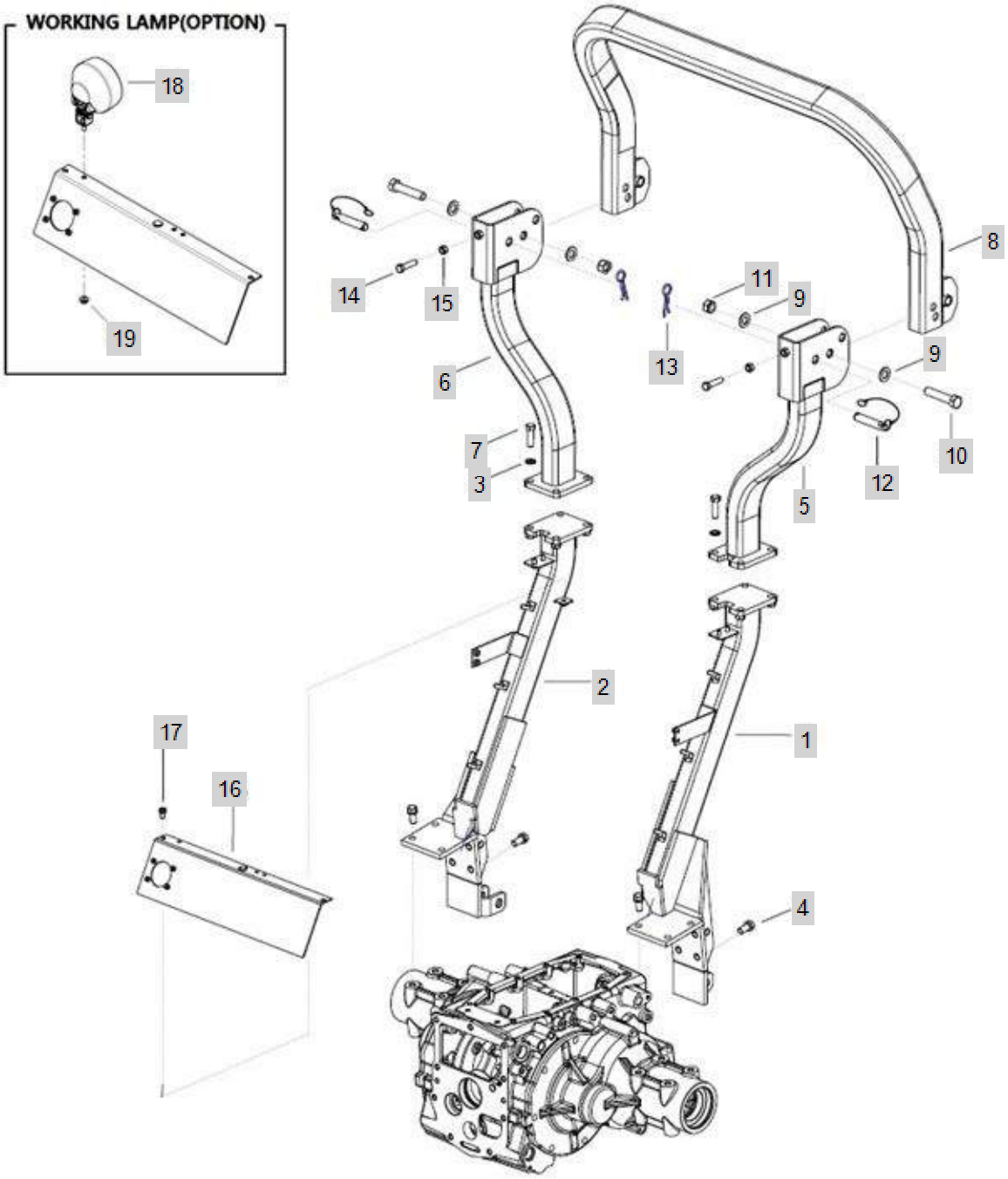

FIG C158-1 4015R	158. ROPS FRAME ASS'Y	Year/Month 2020/01

KeyNo.	Part Number	Part Name	Quantity	Other
1	TA00040789G	LOWER FRAME ASSY (LH)	1	
2	TA00040846F	LOWER FRAME ASSY (RH)	1	
3	22217-140000	WASHER, SPRING (Φ 14)	8	
4	26013-140302	BOLT(+SW)	14	
5	TA00039014F	LOWER FRMAE ASS`Y	1	
6	TA00039361E	LOWER FRAME ASSY (RH)	1	
7	26116-140452	BOLT	8	
8	TA00046791B	ROPS ASSY(US)	1	
9	22137-180000	WASHER, PLAIN (Φ 18)	4	
10	26116-180902	BOLT	2	
11	TA00047305A	U-NUT	2	
12	NTF8400000A3	ROPSPIN	2	
13	TTE7010000A4	SNAPPIN	2	
14	26116-120504	BOLT	2	
15	26716-120002	BOLT,CYLINDER HEAD(B)	2	
16	TA00039353E	REAR SUPPORT ASSY	1	
17	26106-080162	SCREW,HEXFLANGEHEADCAP	2	
18	CEG6250000A2	Lamp Ass'y, Working	1	
19	26367-080002	HEX FLANGE NUT (Φ8)	1	

FIG C158A-2 4015R	158. ROPS FRAME ASS'Y (2018.02)	Year/Month 2020/01

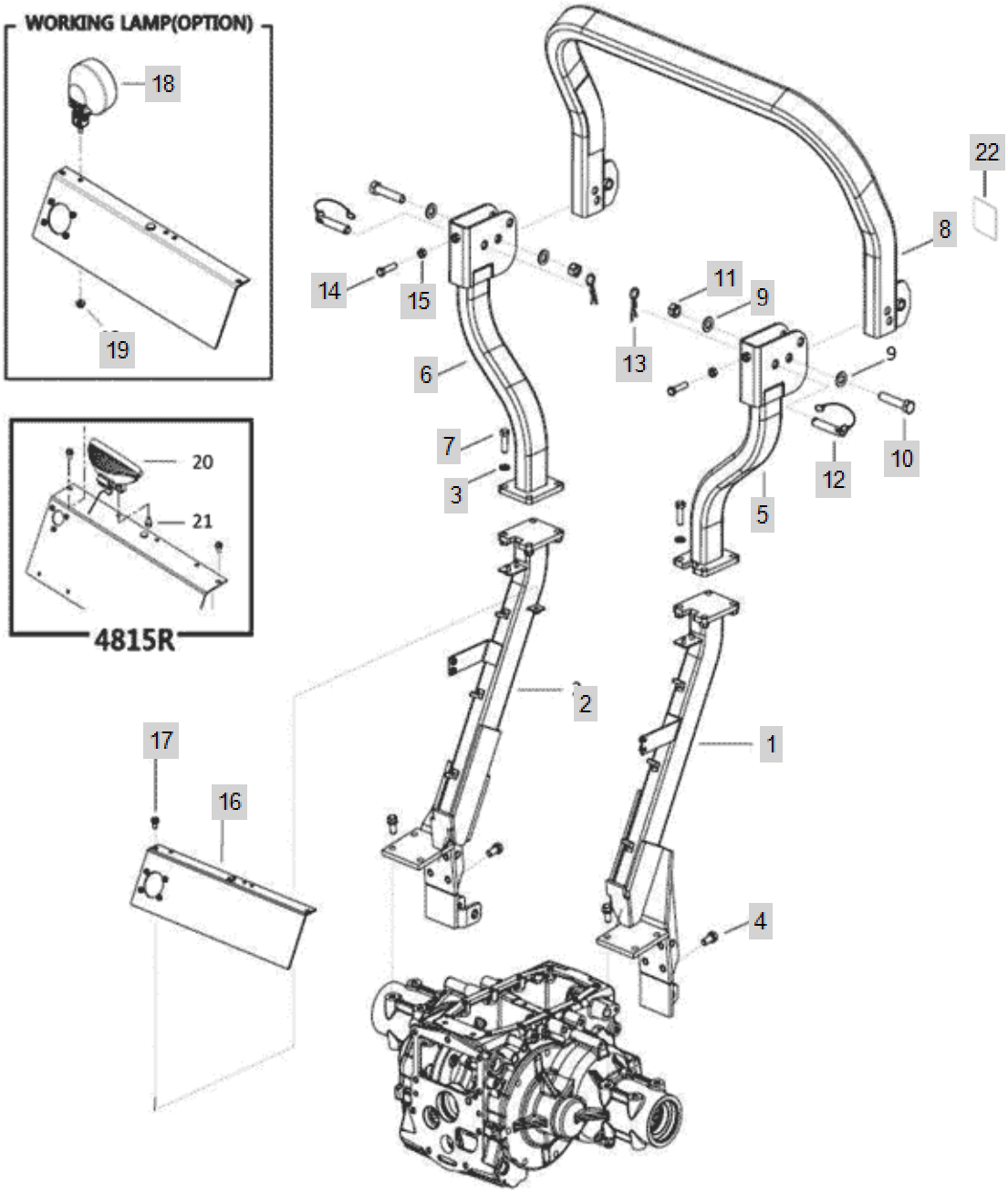

FIG C158A-2 4015R	158. ROPS FRAME ASS'Y (2018.02)	Year/Month 2020/01

KeyNo.	Part Number	Part Name	Quantity	Other
1	TA00040789G	LOWER FRAME ASSY (LH)	1	
2	TA00040846F	LOWER FRAME ASSY (RH)	1	
3	22217-140000	WASHER, SPRING (Φ 14)	8	
4	26013-140302	BOLT(+SW)	14	
5	TA00039014F	LOWER FRMAE ASS`Y	1	
6	TA00039361E	LOWER FRAME ASSY (RH)	1	
7	26116-140452	BOLT	8	
8	TA00046791B	ROPS ASSY(US)	1	
9	22137-180000	WASHER, PLAIN (Φ 18)	4	
10	26116-180902	BOLT	2	
11	TA00047305A	U-NUT	2	
12	NTF8400000A3	ROPSPIN	2	
13	TTE7010000A4	SNAPPIN	2	
14	26116-120504	BOLT	2	
15	26716-120002	BOLT,CYLINDER HEAD(B)	2	
16	TA00039353E	REAR SUPPORT ASSY	1	
17	26106-080162	SCREW,HEXFLANGEHEADCAP	2	
18	CEG6250000A2	Lamp Ass'y, Working	1	
19	26367-080002	HEX FLANGE NUT (Φ8)	1	
22	TA00060593A	REFLECTOR	2	ADDITION

FIG C161.1B 4015R	161-1. ENGINE SUB	Year/Month 2020/01

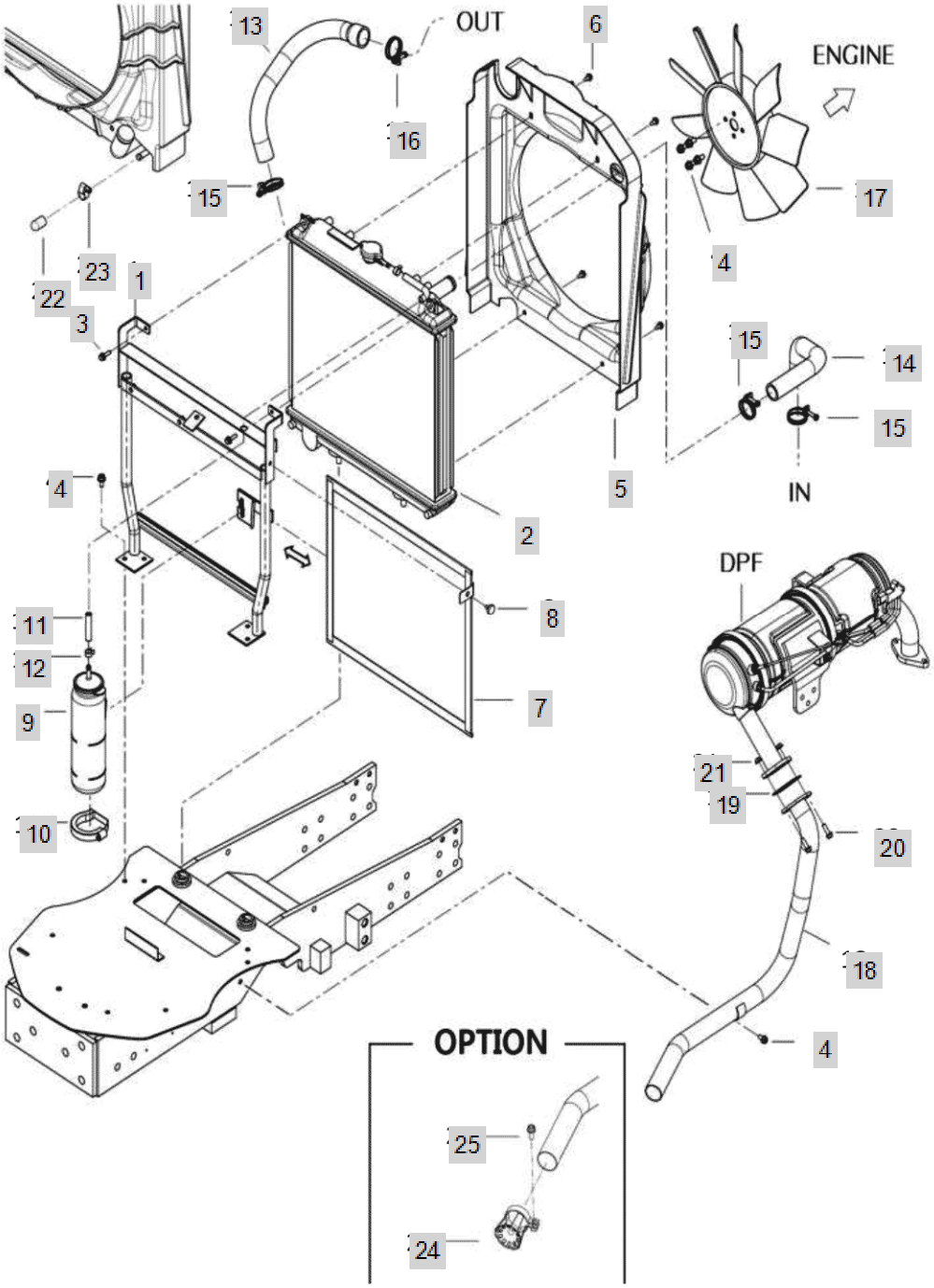

FIG C161.1B 4015R	161-1. ENGINE SUB	Year/Month 2020/01

KeyNo.	Part Number	Part Name	Quantity	Other
1	TA00039399D	BRACKET ASS'Y	1	
2	HRA1203000B	RADIATOR	1	
3	26014-060252	Bolt, Hexa (6-25)	2	
4	26106-080162	SCREW,HEXFLANGEHEADCAP	9	
5	TA00040421B	SHROUD	1	
6	HRA1203200A4	TAPPINGSCREW	4	
7	TA00040713C	NET, ASSY	1	
8	CA00009493A	FIX BOILT (BLACK)	1	
9	CA09270000C	TANK ASSY, SUB	1	
10	CA09310000A	SUB TO-> CA09310000A4	1	
11	23980-730330	HOSE	2	
12	23080-013000	Clamp, Hose (Φ13)	1	
13	TA00039707A	HOSE B	1	
14	TA00060737A	HOSE A	1	
14-1	TA00039706A	HOSE A	1	DELETE
15	23010-038000	HOSEBAND	3	
16	23010-040000	HOSEBAND	1	
17	TA00044911A	COOLING PAN	1	
18	TA00040587C	PIPE ASS'Y	1	
18-1	TA00040589C	PIPE ASS'Y	1	
19	HK0514000EA4	GASKET	1	
20	26106-080252	SCREW,HEXFLANGEHEADCAP	2	
21	26367-080002	HEX FLANGE NUT (Φ8)	2	
22	HRC1201200A4	CAP,COOLER	1	
23	23000-016000	Clip, Hose (Φ16)	1	
24	TA00042357A	EXHAUST ASSY	1	
25	26106-080252	SCREW,HEXFLANGEHEADCAP	1	

FIG C161.2C-1 4015R	161-2. ENGINE SUB (2018.01)	Year/Month 2020/01

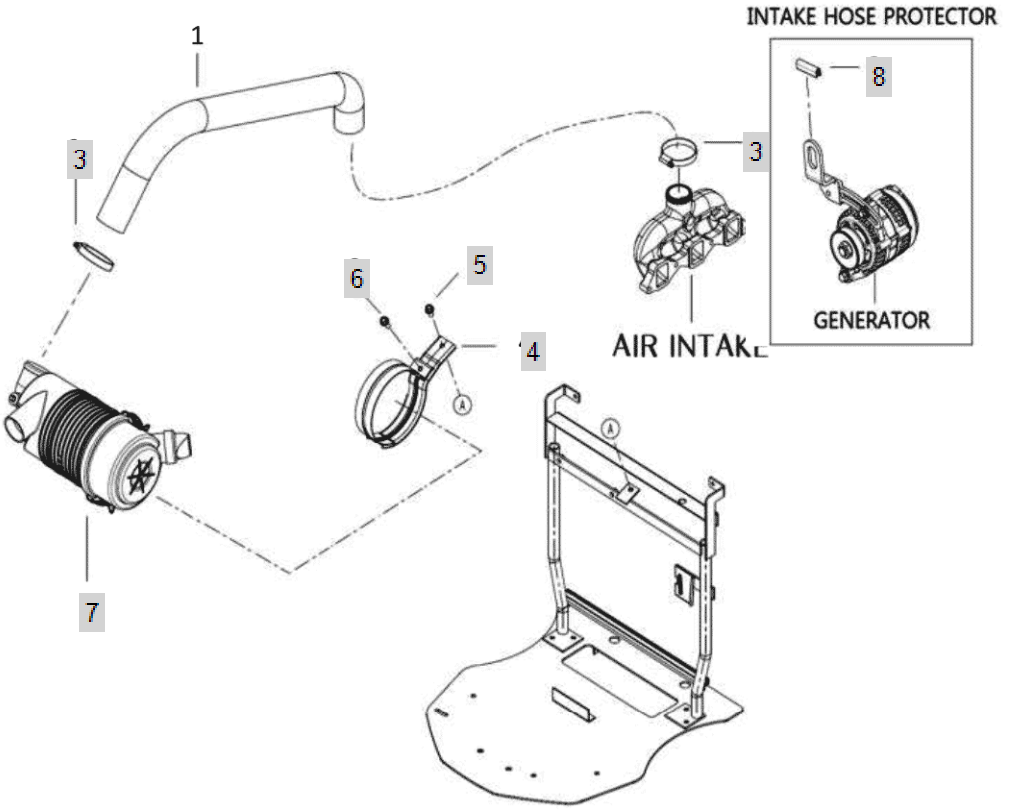

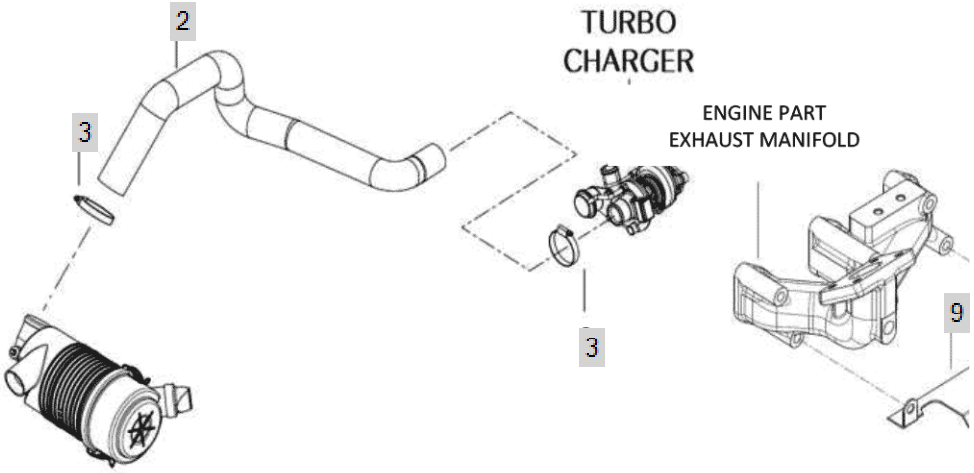

FIG C161.2C-1 4015R	161-2. ENGINE SUB (2018.01)	Year/Month 2020/01

KeyNo.	Part Number	Part Name	Quantity	Other
2	TA00040851D	HOSE	1	
3	23000-070000	CLAMP,HOSE	2	
4	TCE7410000A3	BRACKET	1	
5	26106-080162	SCREW,HEXFLANGEHEADCAP	1	
6	26106-080202	SQR FLANGE BOLT	1	
7	TA00042938A	AIR CLEANER ASSY	1	
8	TA00042150A	STRIP	1	
9	TA00045005A	COVER	1	

FIG C161.2C-2 4015R	161-2. ENGINE SUB(2018.02~)	Year/Month 2020/01

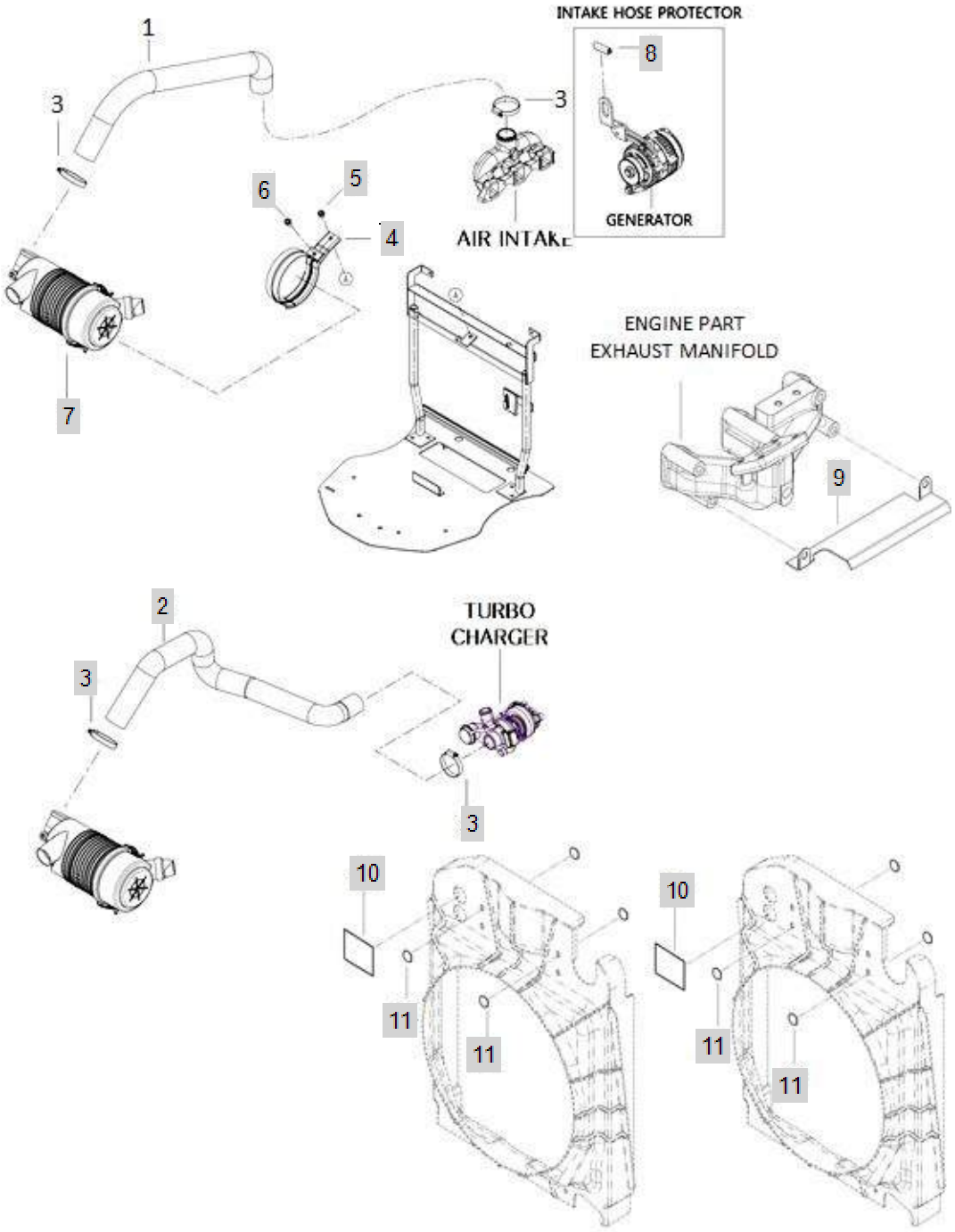

FIG C161.2C-2 4015R	161-2. ENGINE SUB(2018.02~)	Year/Month 2020/01

KeyNo.	Part Number	Part Name	Quantity	Other
2	TA00040851D	HOSE	1	
3	23000-070000	CLAMP,HOSE	2	
4	TCE7410000A3	BRACKET	1	
5	26106-080162	SCREW,HEXFLANGEHEADCAP	1	
6	26106-080202	SQR FLANGE BOLT	1	
7	TA00042938A	AIR CLEANER ASSY	1	
8	TA00042150A	STRIP	1	DELETE
9	TA00045005A	COVER	1	
10	TA00054115B	STICKER 2	2	
11	TA00054028B	STICKER	4	

FIG C191 4015R	191. RELIEF VALVE	Year/Month 2020/01

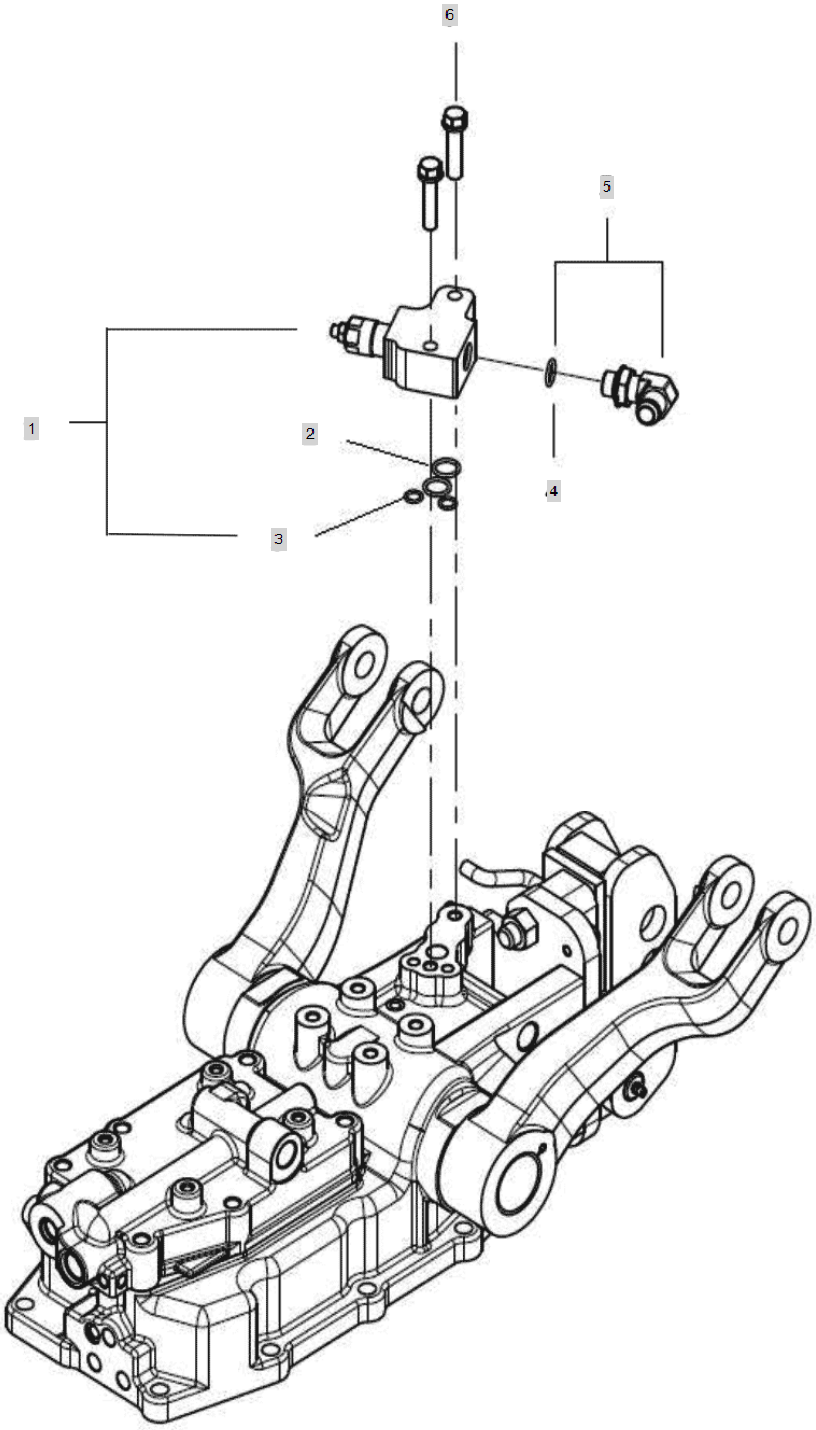

FIG C191 4015R	191. RELIEF VALVE	Year/Month 2020/01

KeyNo.	Part Number	Part Name	Quantity	Other
1	TA00033977A	COVER RELIEF	1	
2	24311-000160	O-RING, DYNAMIC (Φ16)	2	
3	24311-000100	O-RING, DYNAMIC (Φ10)	2	
4	24311-000140	O-RING, DYNAMIC (Φ14)	1	
5	TA00035078A	ELBOW	1	
6	26013-100452	HEX BOLT W/WASHER	2	

FIG C192-1 4015R	192. SUN VISOR	Year/Month 2020/01

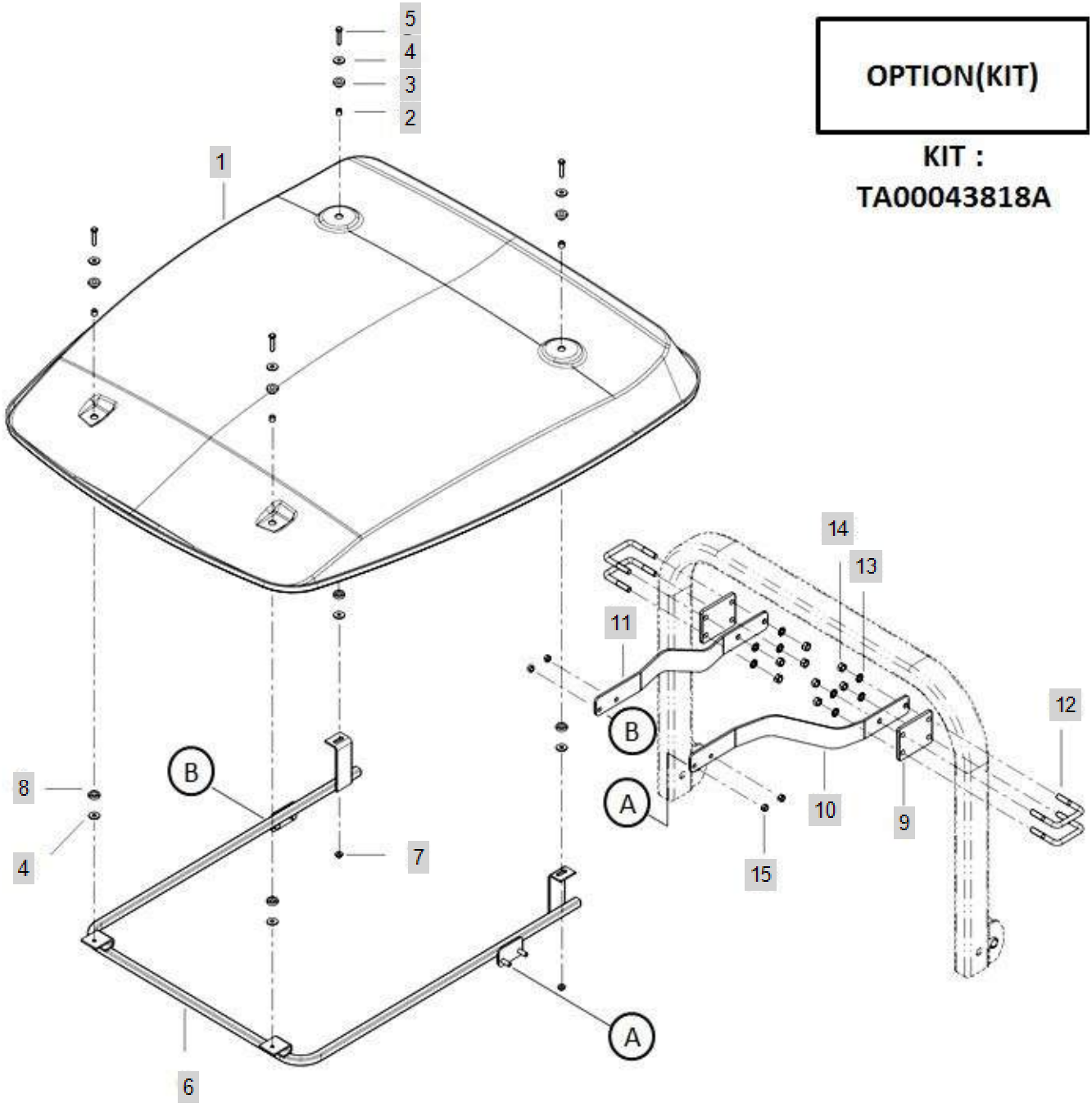

FIG C192-1 4015R	192. SUN VISOR	Year/Month 2020/01

KeyNo.	Part Number	Part Name	Quantity	Other
1	TCJ6040000B0	ROOF ASSY	1	
2	TTF8390000A4	COLLAR	4	
3	TT29160000A4	RUBBERB	4	
4	22157-080000	WASHER, PLAIN (Φ 08)	8	
5	26117-080402	BOLT	4	
6	TA00043724A	SUNVISOR FRAME ASSY	1	
7	26367-080002	HEX FLANGE NUT (Φ8)	2	
8	TT29150000A4	RUBBERA	8	
9	TA00043731A	PLATE	2	
10	TA00043728A	SUPPORT BRACKET L	1	
11	TA00043729A	SUPPORT BRACKET R	1	
12	TA00043730A	U BOLT	4	
13	22217-120000	WASHER, SPRING (Φ 12)	8	
14	26716-120002	BOLT,CYLINDER HEAD(B)	8	
15	26716-100002	Nut, Hexa (Φ10)	4	

FIG C192-2 4015R	192. SUN VISOR	Year/Month 2020/01

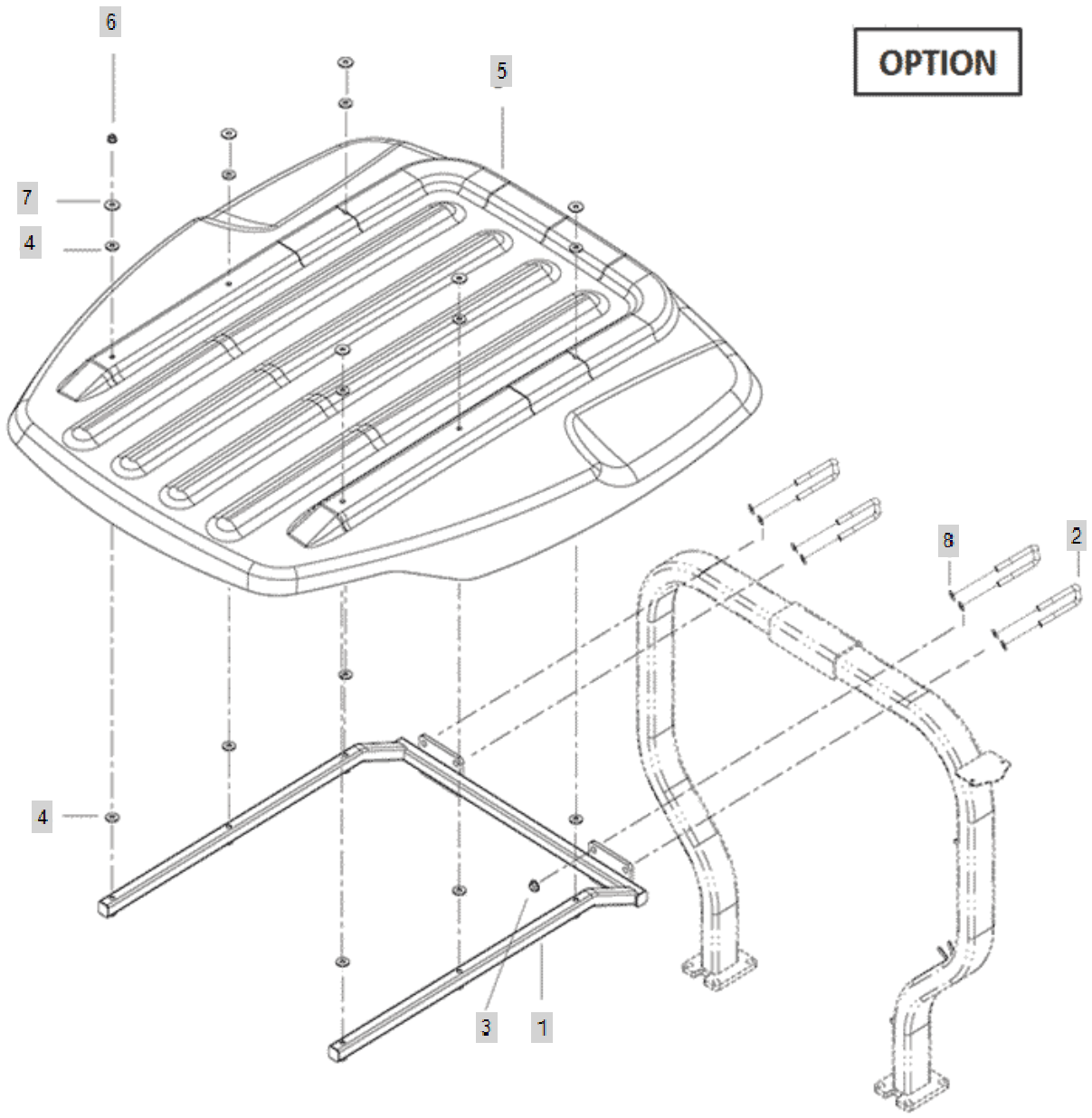

FIG C192-2 4015R	192. SUN VISOR	Year/Month 2020/01

KeyNo.	Part Number	Part Name	Quantity	Other
1	TA00050247A	CANOPY FRAME ASS`Y	1	
2	TA00050243A	U-BOLT	4	
3	26367-120002	NUT	8	
4	THA4904000A9	PACKING 1	12	
5	TA00050087B	CANOPY	6	
6	26106-100552	BOLT	6	
7	22157-100000	WASHER, PLAIN (Φ 10)	6	
8	22137-120000	WASHER, PLAIN (Φ 12)	8	