KUKJE 4720 Branson Tractor

Parts Catalogue

BRANSON TRACTOR

CONTENTS

GROUP NO	GROUP NAME	PAGE
000	AC47510	5
E001	CYLINDER BLOCK	7
E002	GEAR CASE	9
E003	MOUNTING FLANGE AND OIL PAN	11
E004	CYLINDER HEAD AND HEAD COVER	13
E005	INTAKE MANIFOLD	16
E006	EXHAUST MANIFOLD AND SILENCER	18
E007	CAM SHAFT AND DRIVING GEAR	20
E008	CRANK SHAFT AND PISTON	22
E010	BALANCER	24
E011-1	LUB. OIL SYSTEM	26
E011-2	LUB. OIL SYSTEM	28
E012-1	COOLING SYSTEM	30
E012-2	COOLING SYSTEM	32
E013	FUEL INJECTION PUMP	34
E015	FUEL INJECTION SYSTEM AND VALVE	36
E016	FUEL SYSTEM	38
E017	STARTING MOTOR	40
E018	GENERATOR AND ELECTRIC DEVICE	42
S001	LEVER ACCELERATOR	44
S002	STEERING COLUMN	46
S003	REVERSER ASSY	48
S004	FRONT AXLE BRACKET	50
S009	CENTER PIN SUPPORTER	52
S010-2	TIE ROD - 20 SERIES EARLY VERSION	54
S010-4	TIE ROD - 20 SERIES CURRENT VERSION	56
S010-5	TIE ROD - UPDATE KIT FOR EARLY VERSION	58
S012	RING GEAR	60
S014	DIFFERENTIAL GEAR	62
S015	PROPELLER SHAFT	64
S016	FRONT SHAFT	66
S018	CASE, FRONT AXLE	68
S019	GEAR CASE FRONT AXLE	70
S021	FRONT 2ND SHAFT	72
S022	FRONT SPINDLE	74

GROUP NO	GROUP NAME	PAGE
S023	COVER SHAFT	76
S032	PS CYLINDER	78
S033	PS VALVE	80
S034	PS PIPE	82
S036	CLUTCH HOUSING	84
S038-1	CLUTCH ASS'Y DUAL STAGE CLUTCH	86
S040	CLUTCH RELEASE	88
S041	TRANSMISSION CASE SHIFT	90
S042	MAIN REVERSER GEAR	93
S043	FRONT DRIVE & RANGE SHIFT GEAR	96
S044	FRONT DRIVE RANGE SHIFT	98
S045-1	PTO SPEED CHANGE	100
S046	REAR AXLE CASE PTO SHIFT	102
S047	LEVER ASS'Y PTO SPEED CHANGE	104
S048	HOUSING REAR AXLE	106
S049	DRIVING PART, REAR AXLE	108
S050	BRAKE	111
S053	BRAKE, CLUTCH PEDAL	113
S067	LEVER, MAIN SHIFT	116
S099	HYDRAULIC PUMP	118
S101	CASE HYD CYLINDER	120
S103-1	SCV VALVE SUPPORT	122
S104	3 POINT LIFT PISTON ASS'Y	124
S106	3 POINT LIFT CONTROL VALVE	126
S108	3 POINT LIFT RELIEF VALVE	128
S109	3 POINT LIFT STOP VALVE	130
S110	3 POINT LIFT SAFETY VALVE	132
S111-2	HYDRAULIC CONTROL - 20 SERIES	134
S113	DRAFT CONTROL	137
S114	HYDRAULIC PIPES	139
S118	HYDRAULIC FILTER	141
S119	WIRING HARNESS	143
S124	BATTERY & HORN	145
S125-A	SWITCH EARLY VERSION	147
S132	LAMP	149

GROUP NO	GROUP NAME	PAGE
S132A	FOOT REST - EARLY VERSION	151
S134	METER ASS'Y	153
S136	HOOD & SIDE PANEL	155
S137-A	DASH BOARD EARLY VERSION	158
S138	FENDER	160
S140	SEAT	162
S141A	FUEL TANK OLD VERSION	164
S144	DECALS	166
S145	DECALS	168
S146-A	TOP LINK EARLY VERSION	170
S147-A	LIFT LINK R EARLY VERSION	172
S148-A	LIFT LINK L EARLY VERSION	174
S150	LOWER LINK	176
S152	DRAWBAR HITCH	178
S158	ROPS	180
S160	FRONT WEIGHT	182
S161	ENGINE SUB	184
S190	R2 (DOUBLE SCV) EARLY VERSION	186
S191	RMK1 (SINGLE SCV), RMK2 (DOUBLE SCV) - CURRENT VERSION	188
S200	FILTERS	190

FIG 000 4720	AC47510	Year/Month 2020/02

B CHASSIS

A ENGINE

FIG 000 4720	AC47510	Year/Month 2020/02

KeyNo.	Part Number	Part Name	Quantity	Other
A	AC47510_A	A2300N2 ENGINE	0	
B	AC47510_B	4720 Tractor Parts (see also Engine A2300N2) (Century C47)	0	

FIG E001 4720	CYLINDER BLOCK	Year/Month 2020/02

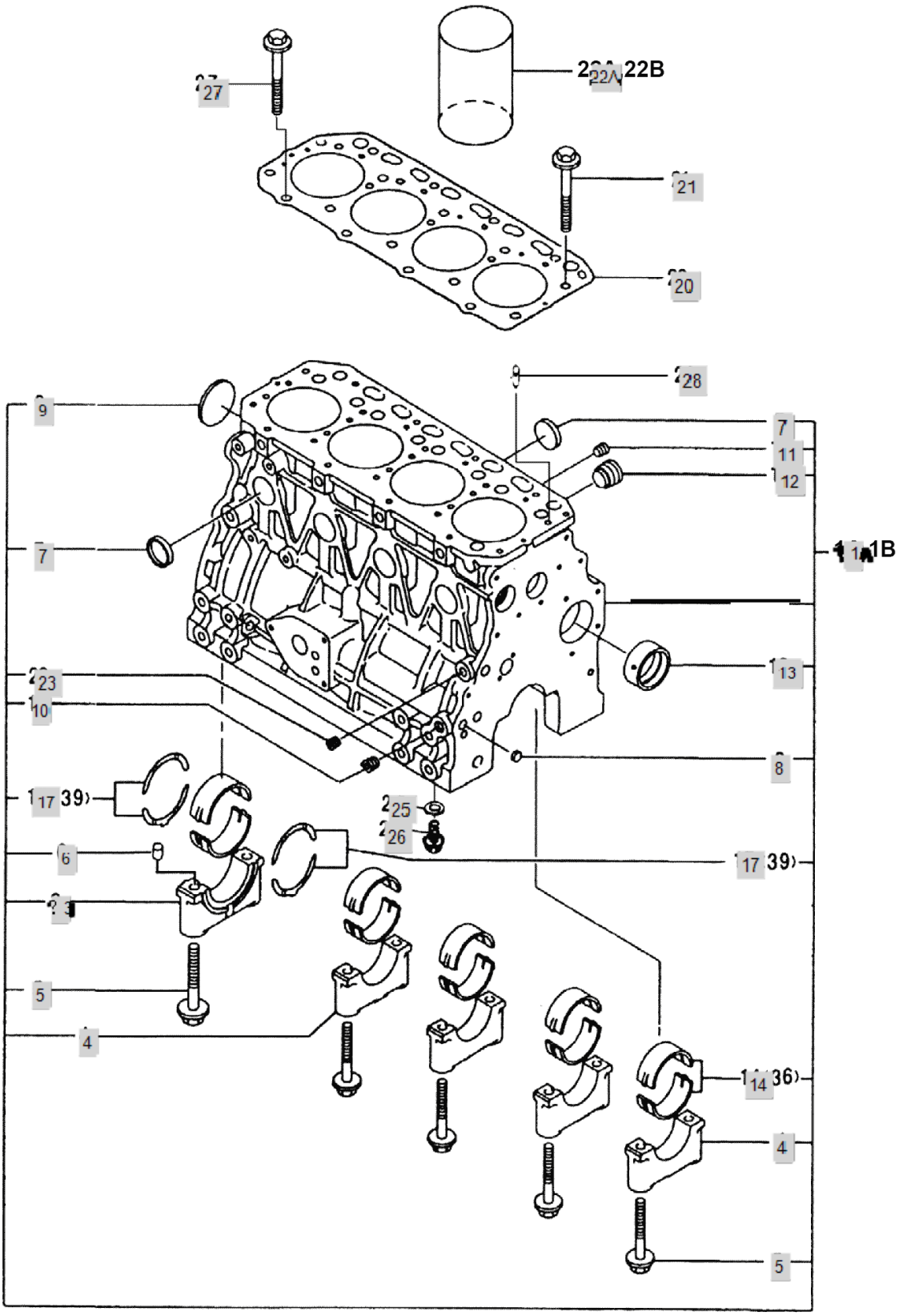

FIG E001 4720	CYLINDER BLOCK	Year/Month 2020/02

KeyNo.	Part Number	Part Name	Quantity	Other
? 1A	HRA0100100A9	CYLINDER BLOCK	1	
? 3	HRA0100102A3	CAP,MAINBEARING	1	
4	HRA0100103A3	CAP,MAINBEARING	4	
5	HRA0100104A4	SCREW,HEXFLANGEHEADCAP	10	
6	22351-030010	PIN, SPRING (3-01)	1	
7	27241-300000	PLUG (D30)	8	
8	HRA0100108A4	PLUG,EXPANSION	3	
9	27231-500000	PLUG,EXPANSION	1	
10	23871-020000	Plug, Pipe	1	
11	23871-030000	PLUG, PIPE	1	
12	HM23030000A4	PLUG	1	
13	HRA0100105A3	BUSHING	1	
14	HRA0100200A9	BEARING,MAIN- >HRA0100201A3 HRA0100202A3	5	
17	HRA0100300A9	BEARING,CRANKSHAFT THRUST	2	
20	HRU0100400A2	GASKET,CYLINDER HEAD (A2300)	1	
21	HRA0100500A4	SCREW,HEXFLANGEHEADCAP	14	
22A	HRA0100600A3	LINER,CYLINDER	4	
23	23871-010000	PLUG	1	
25	23414-080000	WASHER, PLAIN (Φ8)	4	
26	26116-080122	SCREW,HEXAGONHEADCAP	4	
27	HRA0100700A4	SCREW,HEXFLANGEHEADCAP	4	
28	HRA0100800A4	PIN,OIL	1	

FIG E002 4720	GEAR CASE	Year/Month 2020/02

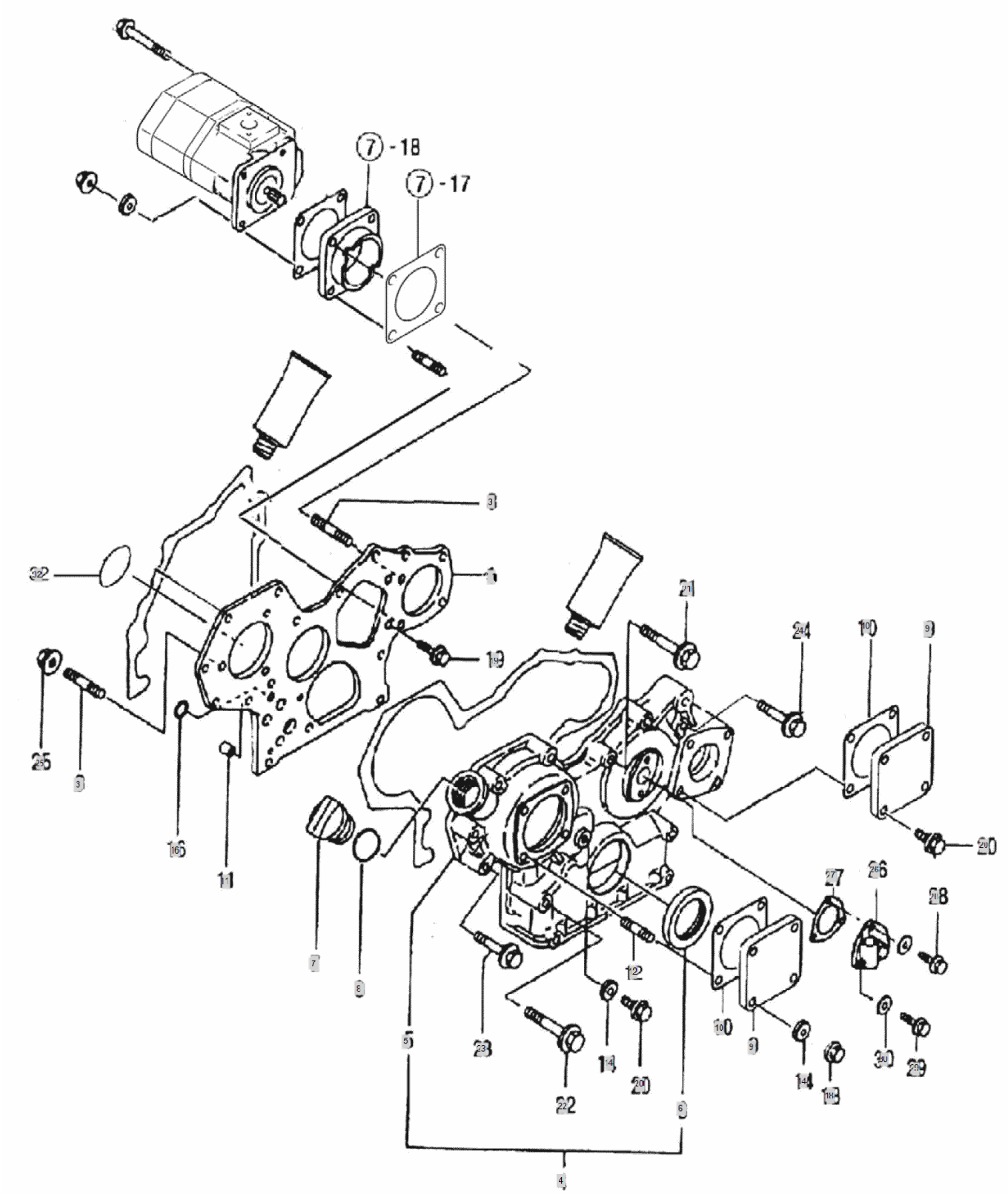

FIG E002 4720	GEAR CASE	Year/Month 2020/02

KeyNo.	Part Number	Part Name	Quantity	Other
? 1	HRA020010DB2	PLATE,GEARCOVER	1	
3	HM02380000A4	STUD	4	
4	HRA0200400C9	COVER,FRONT	1	
5	HRA0200401B0	COVER,FRONT	1	
6	HRA0200402B4	SEAL,OIL (G) -> HRC0200402B4	1	
7	HC03470000B4	CAP,FILTER	1	
8	HA01410000A4	SEAL,RECTANGULARRING	1	
9	HC01230000C4	COVER,ACCESSORYDRIVE	2	
10	HA02110000B4	GASKET,ACCDRIVECOVER	2	
11	HRA0201100A4	PIN,GUIDE	2	
12	26216-080162	STUD	4	
14	23414-080000	WASHER, PLAIN (Φ8)	5	
16	24311-000160	O-RING, DYNAMIC (Φ16)	2	
18	26367-080002	HEX FLANGE NUT (Φ8)	4	
19	26116-080162	SCREW,HEXAGONHEADCAP	3	
20	26106-080162	SCREW,HEXFLANGEHEADCAP	5	
21	26106-080602	SCREW,HEXFLANGEHEADCAP	3	
22	26106-080902	SCREW,HEXFLANGEHEADCAP	2	
23	26106-080852	SCREW,HEXFLANGEHEADCAP	7	
24	26106-080502	SCREW,HEXFLANGEHEADCAP	1	
25	26367-080002	HEX FLANGE NUT (Φ8)	3	
26	HH02360000B3	GEARUNIT	1	
27	HA0230000B4	PACKING -> HA0230000B4	1	
28	26116-060162	BOLT	2	
29	26116-060322	BOLT	1	
30	23414-060000	WASHER,SEALING	3	
32	24341-000500	O-RING, FIX (Φ50)	1	

FIG E003 4720	MOUNTING FLANGE AND OIL PAN	Year/Month 2020/02

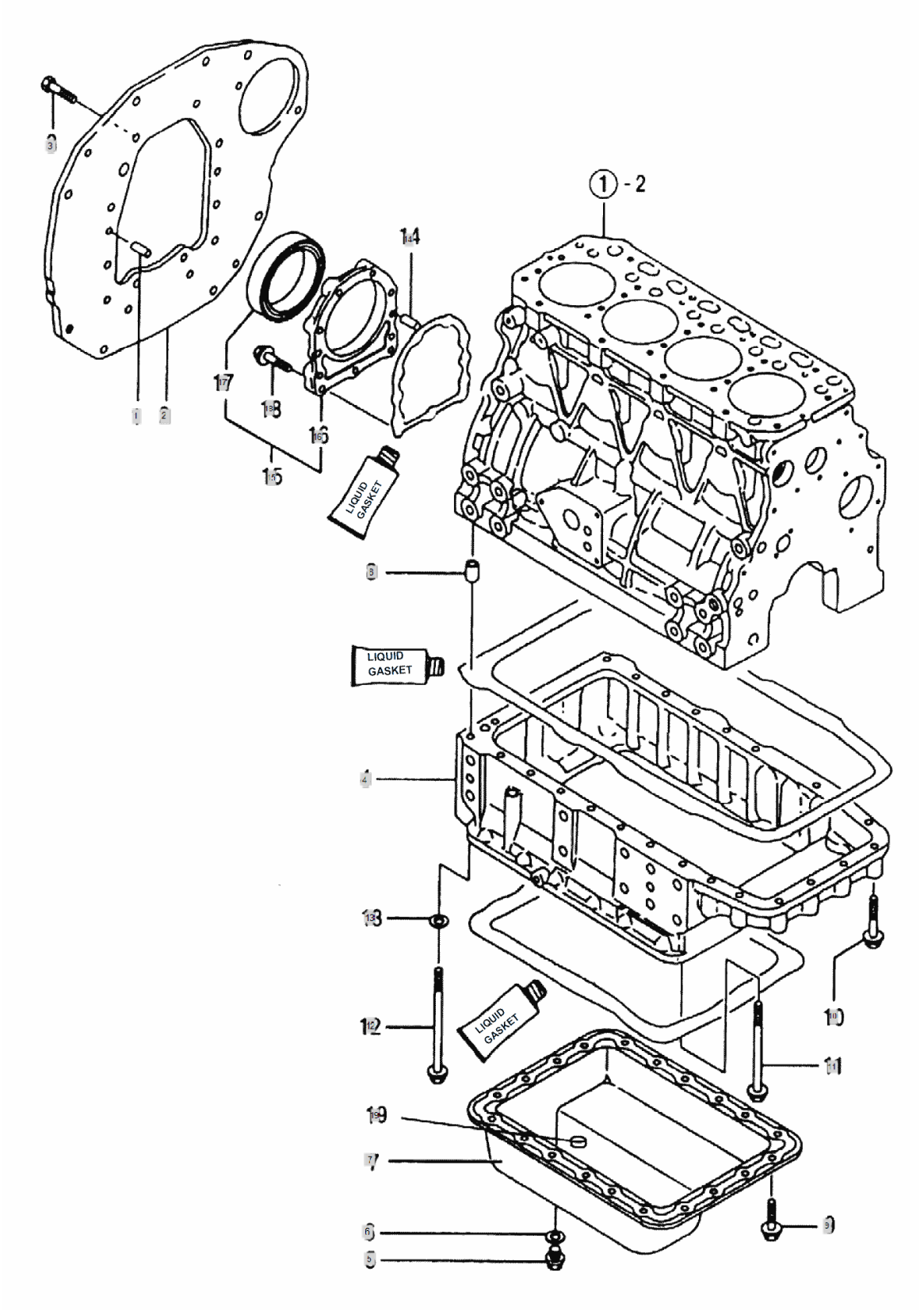

FIG E003 4720	MOUNTING FLANGE AND OIL PAN	Year/Month 2020/02

KeyNo.	Part Number	Part Name	Quantity	Other
1	22312-080160	PIN, DOWEL (8-16)	? 2	
2	HRA0300200B1	MOUNTING FLANGE	1	
3	26116-100202	HEX FLANGE BOLT(M10X1.5X20)	8	
4	HRA0300400A0	ADOPTOR,OILPAN	1	
5	23490-140002	Plug, Drain	1	
6	24311-000160	O-RING, DYNAMIC (Φ16)	1	
7	HRA0300700A1	COVER, LOWER	1	
8	HRA0300800A4	PIN,GUIDE	1	
9	26106-080122	Bolt, Hexa (8-12)	8	
10	26106-080502	SCREW,HEXFLANGEHEADCAP	8	
11	26106-081202	SCREW,HEXFLANGEHEADCAP	16	
12	26116-081202	SCREW,HEXAGONHEADCAP	2	
13	22217-080000	WASHER, SPRING (Φ 08)	2	
14	22312-080160	PIN, DOWEL (8-16)	2	
15	HRA0301400B9	HOUSING ASS'Y,OILSEAL	1	
16	HRA0301401A2	CARRIER,SEAL	1	
17	HRC0300802A4	OIL SEAL (F)	1	
18	26106-080302	HEX BOLT, FLANGE	9	
19	HF01470000A4	MAGNET	1	

FIG E004 4720	CYLINDER HEAD AND HEAD COVER	Year/Month 2020/02

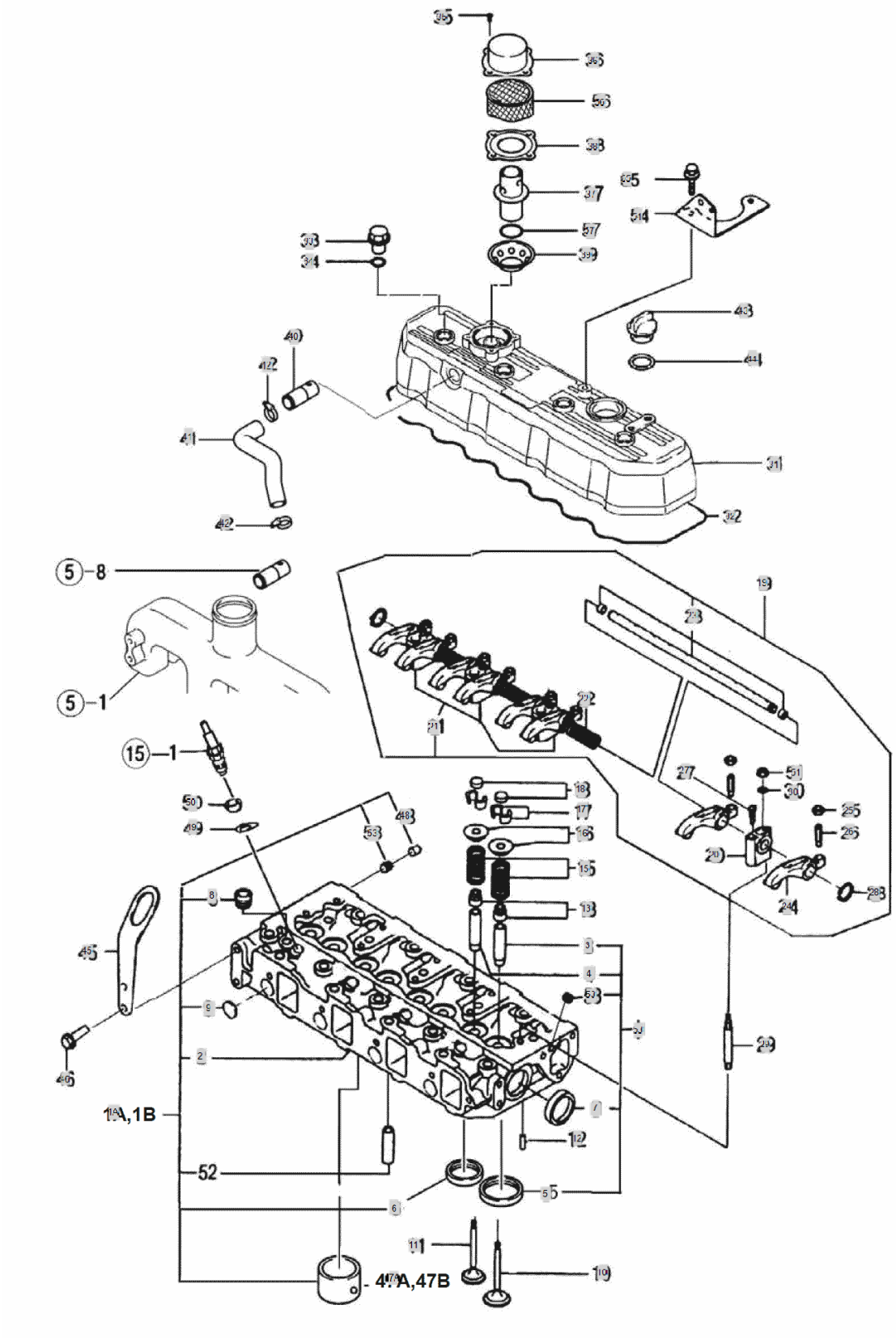

FIG E004 4720	CYLINDER HEAD AND HEAD COVER	Year/Month 2020/02

KeyNo.	Part Number	Part Name	Quantity	Other
1A	HRU220C001A9	HEAD,CYLINDER	1	
2	HRU220C001A9	HEAD,CYLINDER	1	
3	HRA0400102A4	GUIDE,VALVESTEM	4	
4	HRA0400103A4	GUIDE,VALVESTEM	4	
5	HRA0400104B4	SEAT,ENGINEINTAKEVALVE	4	
6	HRA0400105B4	SEAT,ENGINE EXHAUST VALVE	4	
7	27241-400000	PLUG (D40)	2	
8	23871-020000	Plug, Pipe	4	
9	27241-220000	PLUG,EXPANSION	4	
10	HRA0400200A4	VALVE,INTAKE	4	
11	HRA0400300A4	VALVE,EXHAUST	4	
12	22312-040100	PIN, DOWEL (4-10)	2	
13	HA03070000A4	SEAL,VALVESTEM	8	
15	HRA0400700A4	SPRING,VALVE	8	
16	HRA0400800A4	RETAINER,VALVESPRING	8	
17	HRA0400900A4	COTTER,VALVE	16	
18	HK03680000B4	CAP,VALVE	8	
19	HRA0401100A2	LEVER,ROCKER	1	
20	HRA0401200A4	SUPPORT,ROCKERLEVER	1	
21	HRA0401300A4	SUPPORT,ROCKERLEVER	3	
22	HRA0401400A4	SPRING,COMPRESSION	3	
23	HRA0401500A2	SHAFT,ROCKERLEVER	1	
24	HRA0401600A4	LEVER,ROCKER	8	
25	AF02110000E4	SCREW,RKRLEVERADJUSTING	8	
26	HH05280000A4	NUT,VALVEADJUSTING	8	
27	26921-080102	SCREW,SLOTTEDSET	1	
28	22242-000190	SNAP RING, SHAFT (Φ 19)	2	
29	HRA0401800A4	STUD	4	
30	22117-120000	WASHER, PLAIN (Φ 12)	4	
31	HRA0402300B0	COVER,VALVE	1	
32	HRA0402400B3	GASKET,VALVECOVER	1	
33	HA03520000B4	NUT,HEXAGONCAP	4	
34	24311-000140	O-RING, DYNAMIC (Φ14)	4	
35	26587-040102	SCREW,FILLISTERHEADCAP	4	
36	HRA0403600A4	COVER,BREATHER	1	
37	HRA0403700A4	Valve, Pressure Relief	1	
38	HRA0403800A4	GASKET,BREATHER	1	
39	HRA0403900A4	PLATE,BREATHERADJUSTING	1	
40	HRA0404000A4	TUBE,BREATHER	1	
41	HRA0404100C3	HOSE, BREATHER	1	
42	23080-020000	CLAMP, V BAND	2	
43	HC03470000B4	CAP,FILTER	1	
44	HA01410000A4	SEAL,RECTANGULARRING	1	
45	HK03530000A4	BRACKET,LIFTING	1	
46	26106-080162	SCREW,HEXFLANGEHEADCAP	2	

FIG E004 4720	CYLINDER HEAD AND HEAD COVER	Year/Month 2020/02

KeyNo.	Part Number	Part Name	Quantity	Other
47A	HRU0403000A4	CHAMBER,INJECTION	4	
48	HRA0404800A4	PLUG,DRIVE	4	
49	HRA0404900A4	SEAL,INJECTOR	4	
50	HRA0405000A4	SPACER, FUEL INJECTOR	4	
51	HA03180000B4	NUT,REGULARHEXAGON	4	
53	23871-010000	PLUG	5	
54	HRA0403100B3	BRACKET	1	
55	26106-080162	SCREW,HEXFLANGEHEADCAP	3	
56	HC03720000B4	BAFFLE	1	
57	24341-000160	O-RING, FIX (Φ16)	1	

FIG E005 4720	INTAKE MANIFOLD	Year/Month 2020/02

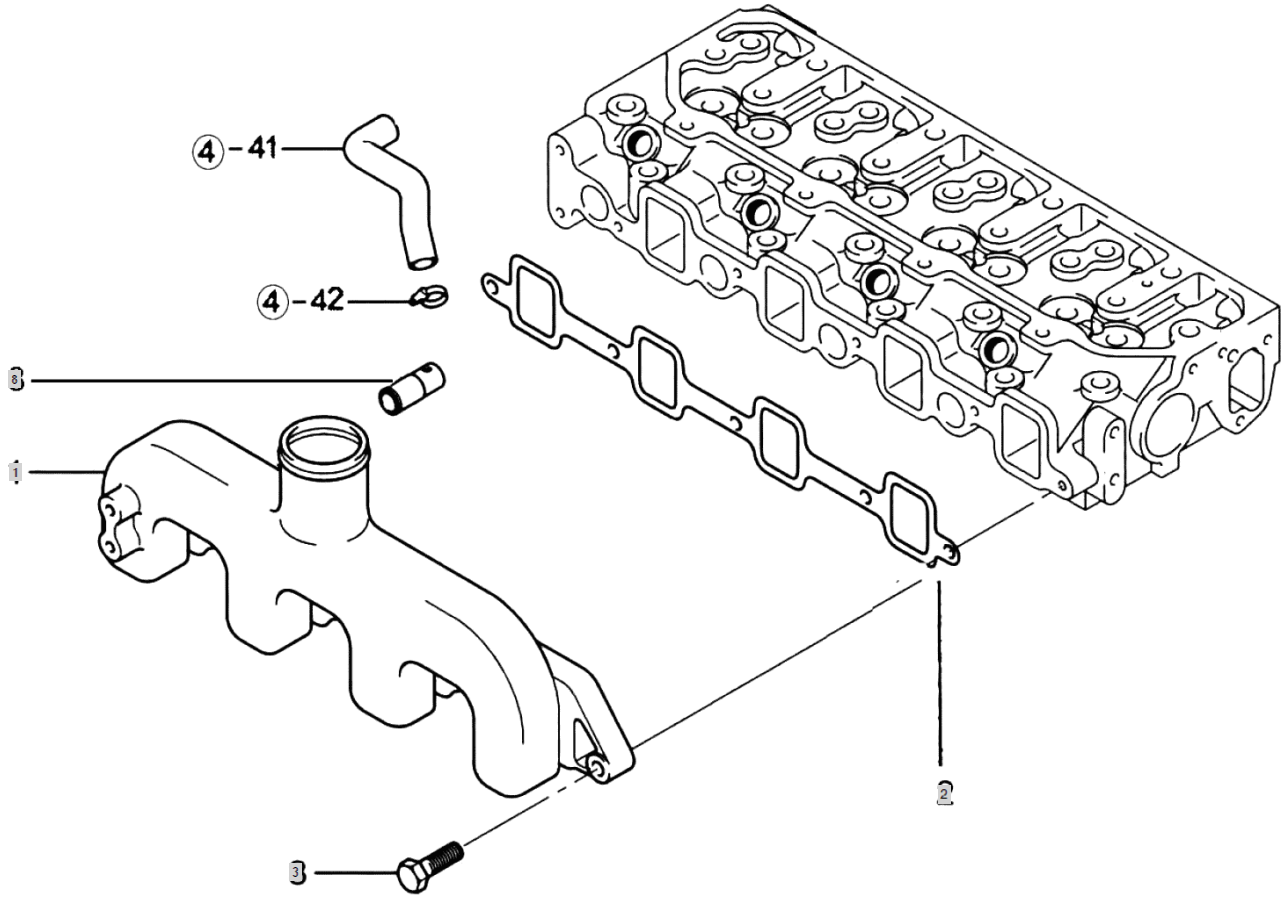

FIG E005 4720	INTAKE MANIFOLD	Year/Month 2020/02

KeyNo.	Part Number	Part Name	Quantity	Other
1	HRA0500100C1	MANIFOLD,AIRINTAKE	1	
2	HRA0500200A3	GASKET,INTAKE MANIFOLD	1	
3	26106-080302	HEX BOLT, FLANGE	5	
8	HRA0404000A4	TUBE,BREATHER	1	

FIG E006 4720	EXHAUST MANIFOLD AND SILENCER	Year/Month 2020/02

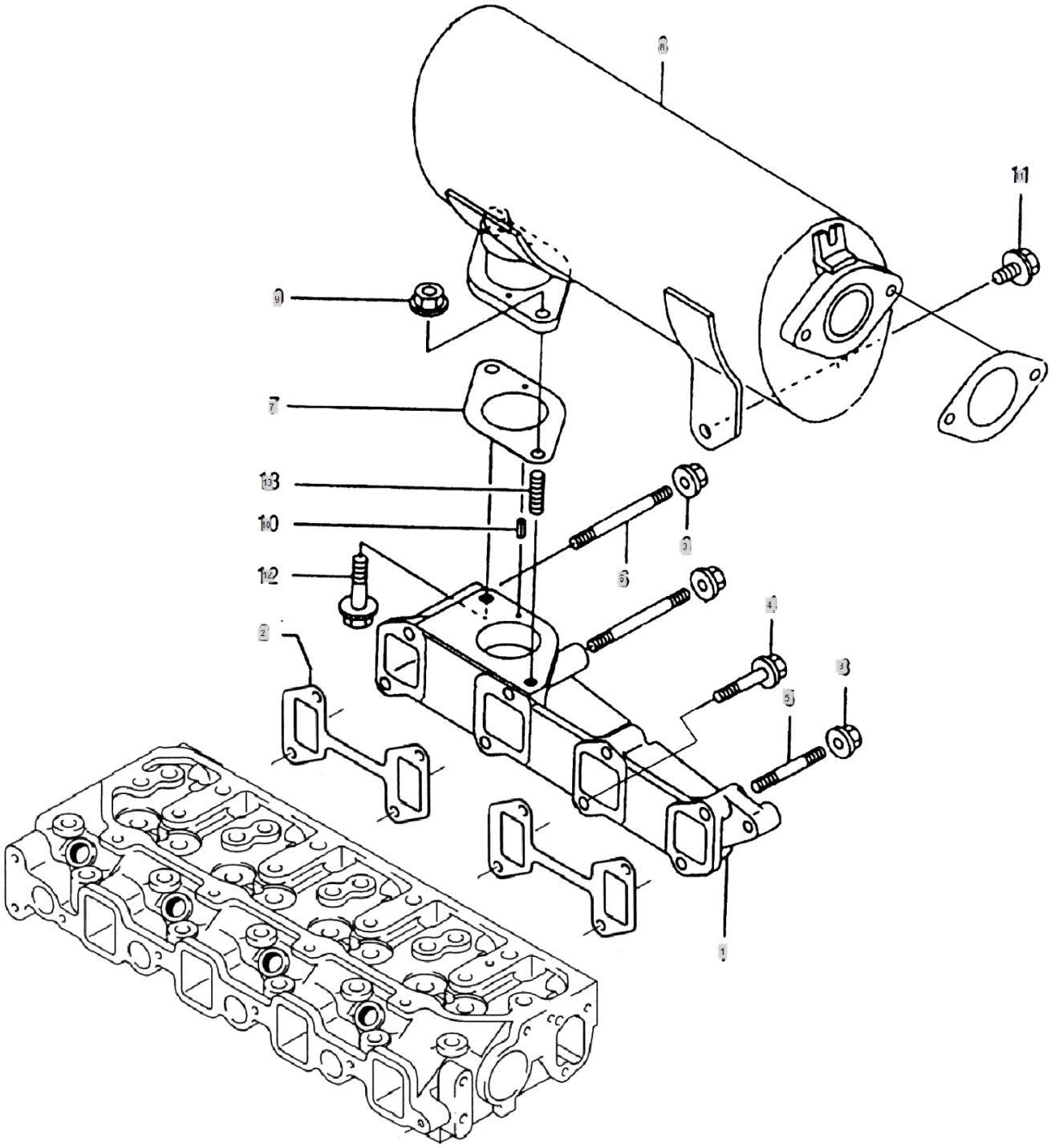

FIG E006 4720	EXHAUST MANIFOLD AND SILENCER	Year/Month 2020/02

KeyNo.	Part Number	Part Name	Quantity	Other
1	HRA0600100A1	MANIFOLD,EXHAUST	1	
2	HRA0600200A3	GASKET,EXHAUSTMANIFOLD	2	
3	26367-080002	HEX FLANGE NUT (Φ8)	4	
4	26106-080452	HEX FLANGE BOLT 8X45	4	
5	26216-080502	BOLT, STUD 8 ×50	2	
6	26216-080802	STUD	2	
7	HRA0600700A4	GASKET,MUFFLER	1	
8	HRB0600800A0	MUFFLER	1	
9	26367-080002	HEX FLANGE NUT (Φ8)	1	
10	22351-040012	PIN, SPRING (4-01)	1	
11	26014-080142	SCREW,CAPTIVEWASHERCAP	1	
12	26106-080402	SCREW,HEXFLANGEHEADCAP	1	
13	26216-080222	Bolt, Stud (8-22)	1	
15	HK0514000EA4	GASKET	1	

FIG E007 4720	CAM SHAFT AND DRIVING GEAR	Year/Month 2020/02

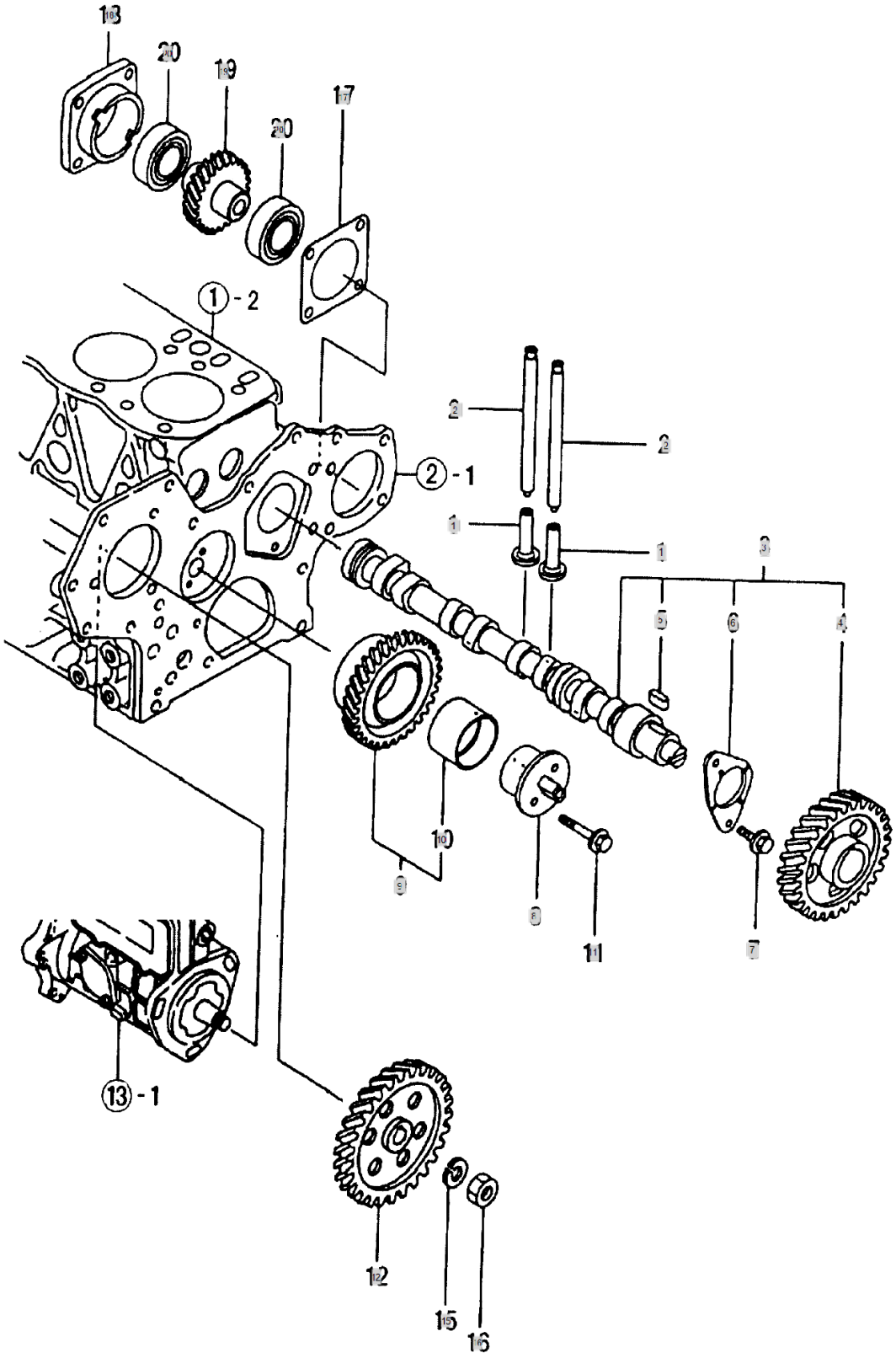

FIG E007 4720	CAM SHAFT AND DRIVING GEAR	Year/Month 2020/02

KeyNo.	Part Number	Part Name	Quantity	Other
1	HH08060000B4	TAPPET,VALVE	8	
2	HRA0700200B4	ROD,PUSH	8	
3	HRA0700300A9	CAMSHAFT	1	
4	HRA0700302A3	GEAR,CAMSHAFT	1	
5	22512-070140	KEY, SLIDING (07-14)	1	
6	HRA0700304A4	Bearing, Camshaft Thrust	1	
7	26106-080162	SCREW,HEXFLANGEHEADCAP	2	
8	HRA0700500A3	SHAFT,IDLER	1	
9	HRA0700600A3	GEAR,IDLER	1	
10	HH08120000A4	BUSH	1	
11	26013-080502	Bolt, Hexa (8-50)	2	
12	HRA070080DA3	GEAR,FUELPUMP	1	
15	22217-120000	WASHER, SPRING (Φ 12)	1	
16	26716-120002	BOLT,CYLINDER HEAD(B)	1	
17	HK02350000A4	GASKET,ACCDRIVECOVER	1	
18	HK02340000B3	HOUSING, POWER TAKEOFF	1	
19	HRA4000300A3	HYD.PUMP GEAR	1	
20	24101-060064	Bearing, Ball (#6006)	2	

FIG E008 4720	CRANK SHAFT AND PISTON	Year/Month 2020/02

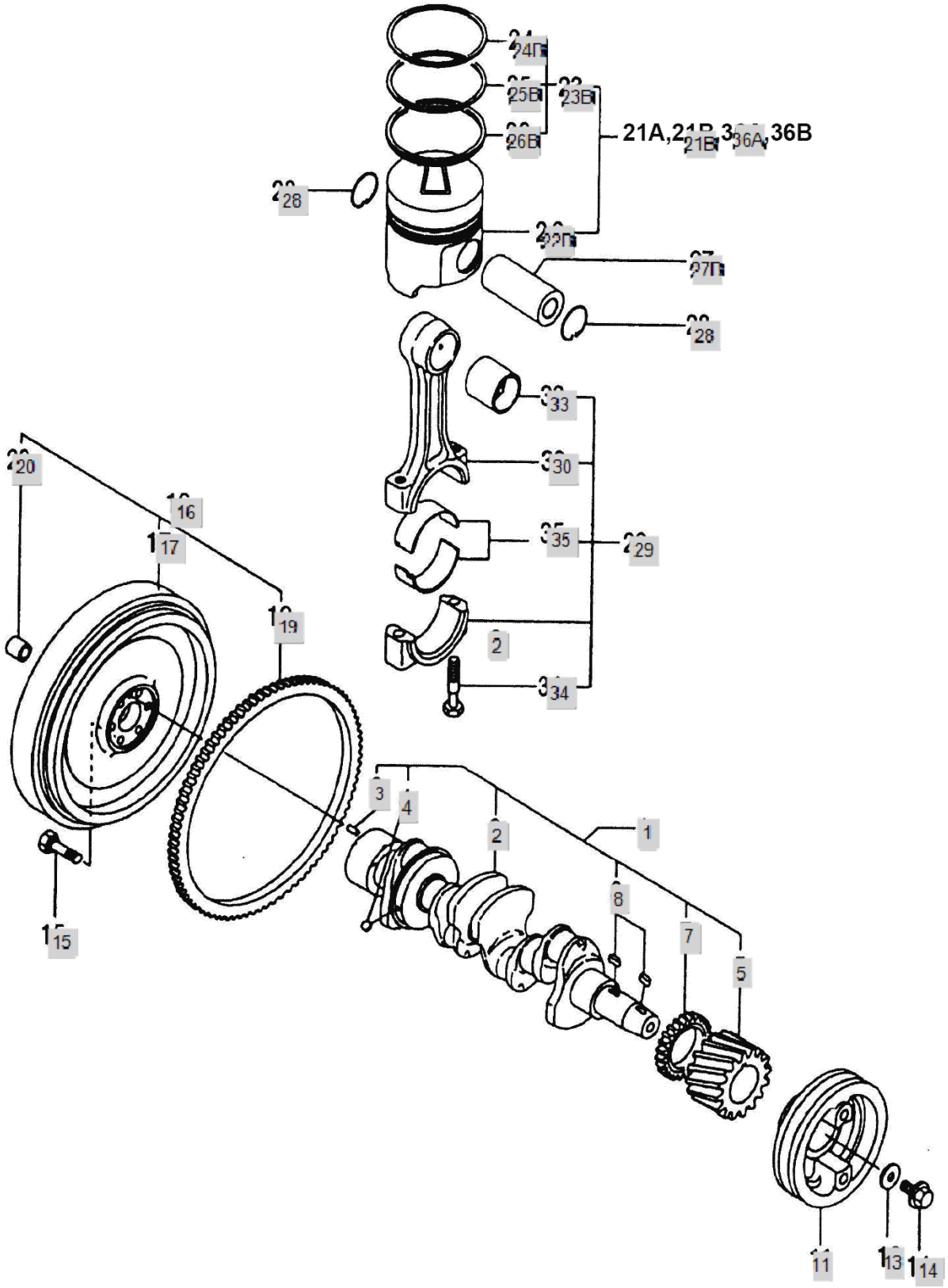

FIG E008 4720	CRANK SHAFT AND PISTON	Year/Month 2020/02

KeyNo.	Part Number	Part Name	Quantity	Other
1	HRA080010KD9	CRANKSHAFT	1	
2	HRA0800101D0	CRANKSHAFT	1	
3	22312-080160	PIN, DOWEL (8-16)	1	
4	24190-080001	BALL,STEEL	1	
5	HRA0800200A3	GEAR,CRANK SHAFT	1	
7	HRA0800400A3	GEAR,BALANCERDRIVEN	1	
8	22512-070140	KEY, SLIDING (07-14)	2	
11	HRA0800700C2	PULLEY,CRANKSHAFT	1	
13	HRA0800800A4	WASHER,PLAIN	1	
14	HH09090000A4	SCREW,HEXFLANGEHEADCAP	1	
15	HRC0801000A4	SCREW,HEXAGONHEADCAP	6	
16	HRA4000200B9	FLYWHEELASS'Y	1	
17	HRA4000201B1	FLYWHEEL	1	
19	HA07070000A2	RING GEAR,FLYWHEEL	1	
20	24104-063024	BALL BEARING (#6302UU)	1	
21B	HRA0801300A9	PISTON ASS'Y	4	
22B	HRA0801301B1	PISTON,ENGINE	4	
23B	HRA0801302B9	RINGSET,PISTON	4	
24B	HRA0801303A4	RING,1STCOMPRESSIONPISTON	4	
25B	HRA0801304A4	RING,2NDCOMPRESSIONPISTON	4	
26B	HRA0801305A4	RING,OILPISTON	4	
27B	HK27150000B4	PIN,PISTON	4	
28	HA08070000A4	RING,RETAINING	8	
29	HRA0801600A9	ROD,ENGINECONNECTING	4	
30	HRA0801601A2	ROD,ENGINECONNECTING	4	
33	HRA0801603A4	BUSHING	4	
34	HRA0801602A4	SCREW,HEXAGONHEADCAP	8	
35	HRA0801700A3	BEARING,CONNECTINGROD	8	
36A	EA00001133A	KIT SET, OVERSIZE PISTON	4	

FIG E010 4720	BALANCER	Year/Month 2020/02

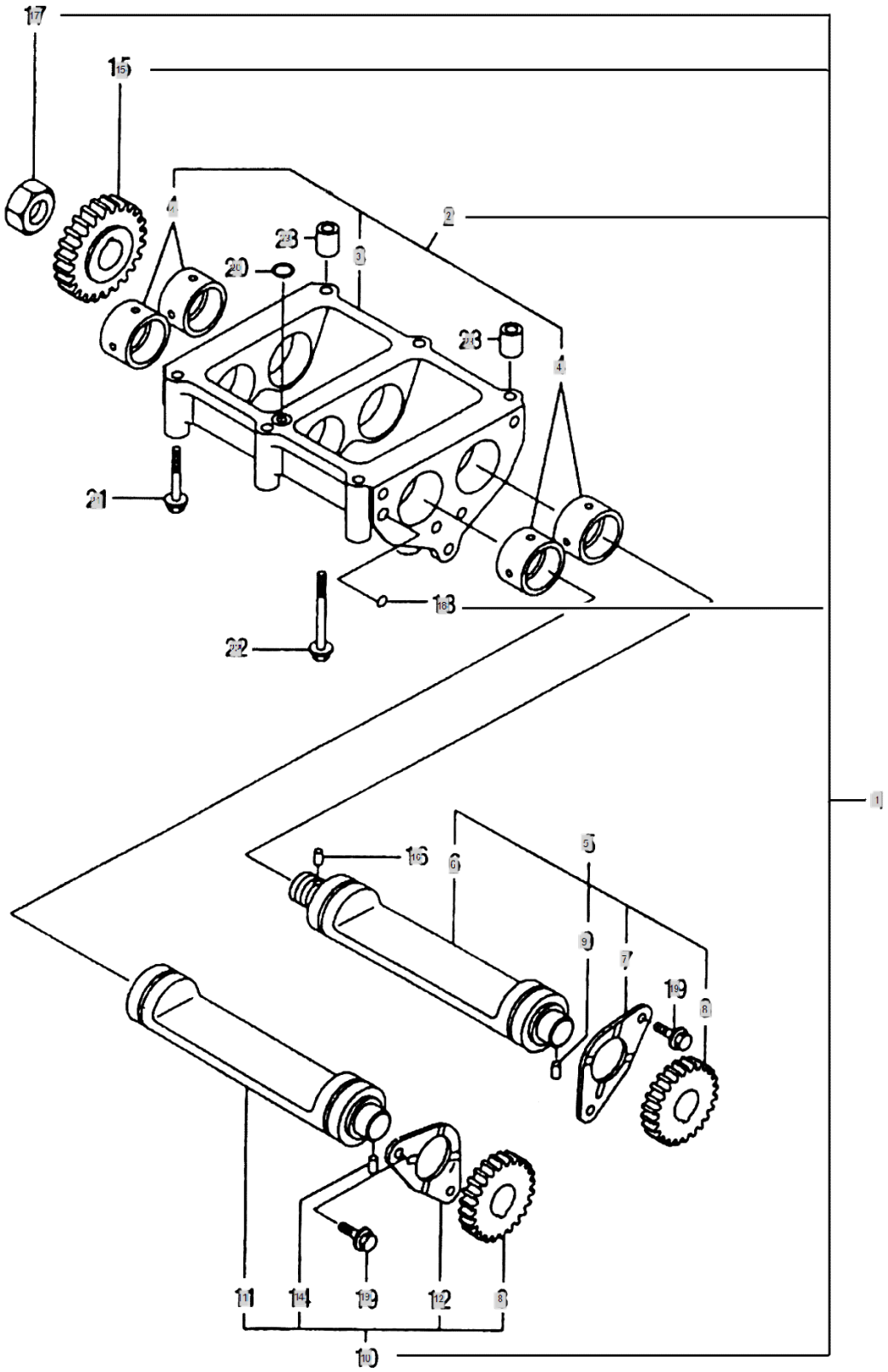

FIG E010 4720	BALANCER	Year/Month 2020/02

KeyNo.	Part Number	Part Name	Quantity	Other
1	HRA1000100A1	BALANCER	1	
2	HRA1000101A9	BALANCER CASE ASS'Y	1	
3	HRA1000101A0	CASE,BALANCER	1	
4	HRA1000102A3	BUSH,BALANCERSHAFT	4	
5	HRA1000200A9	SHAFTASS'Y(A),BALANCER	1	
6	HRA1000201A3	SHAFT(A),BALANCER	1	
7	HRA1000202A4	BEARING,THRUST	1	
8	HRA100203A3	GEAR B, BALANCER	2	
9	22312-060080	PIN, DOWEL (6-08)	1	
10	HRA1000300A9	SHAFTASS'Y(B),BALANCER	1	
11	HRA1000301A3	SHAFT(B),BALANCER	1	
12	HRA1000202A4	BEARING,THRUST	1	
14	22312-060080	PIN, DOWEL (6-08)	1	
15	HRA1000204A3	GEAR(A),BALANCER	1	
16	22312-060080	PIN, DOWEL (6-08)	1	
17	HRA1000500A4	NUT,BALANCERGEAR(A)	1	
18	24190-080002	Ball, Steel	2	
19	26106-080162	SCREW,HEXFLANGEHEADCAP	4	
20	24311-000140	O-RING, DYNAMIC (Φ14)	1	
21	26106-080652	SCREW,HEXFLANGEHEADCAP	4	
22	26106-080752	SCREW,HEXFLANGEHEADCAP	2	
23	HRA1000700A4	PIN,GUIDE	2	

FIG E011-1 4720	LUB. OIL SYSTEM	Year/Month 2020/02

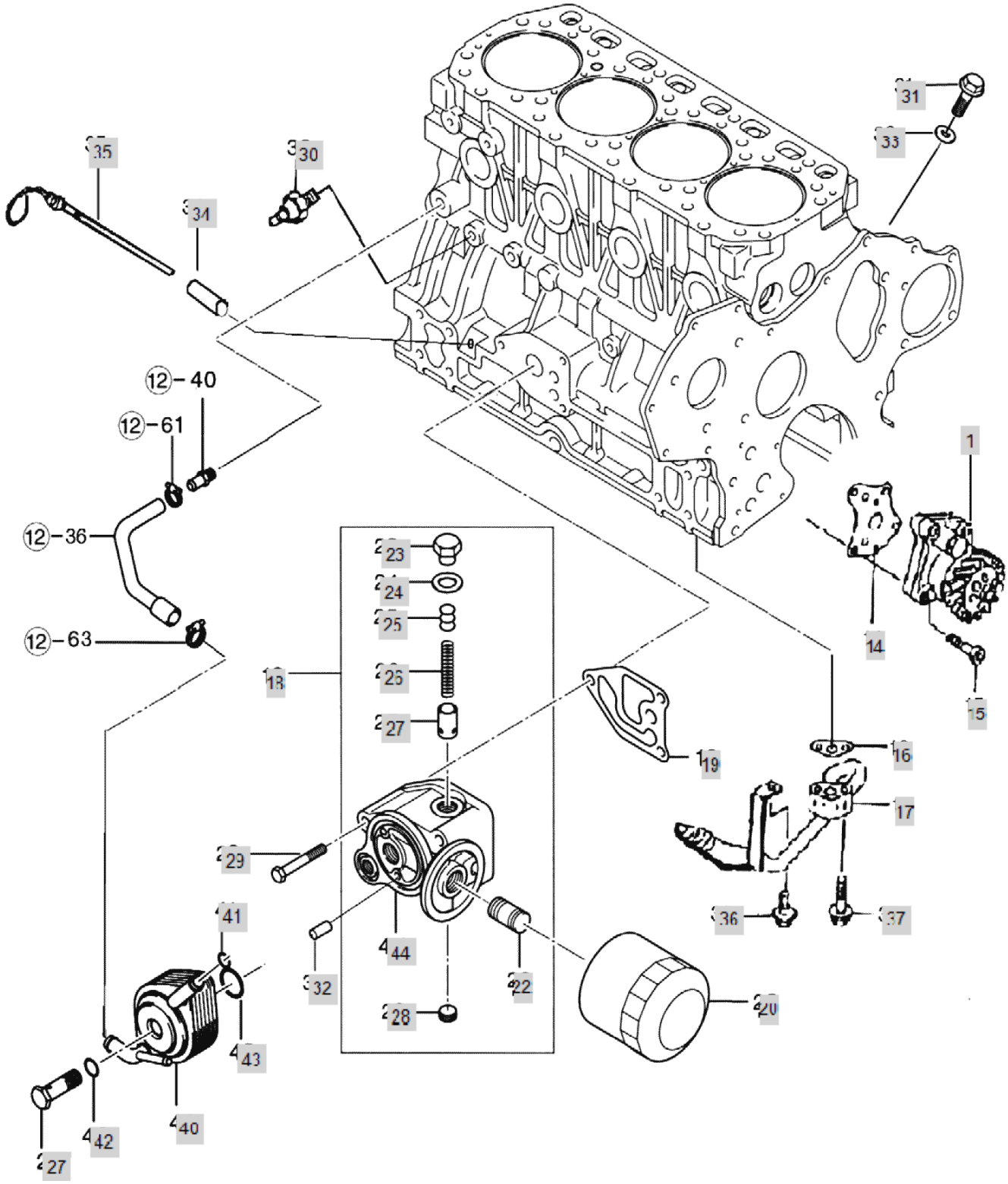

FIG E011-1 4720	LUB. OIL SYSTEM	Year/Month 2020/02

KeyNo.	Part Number	Part Name	Quantity	Other
1	HRA1100109A9	PUMP, LUBRICATING OIL	1	
14	HRA1100600A4	GASKET,LUBOILPUMP	1	
15	26450-060252	SCREW,SOCKETHEADCAP	4	
16	HRA1100700A4	GASKET,OILPAN	1	
17	HRA1100800A2	PIPEASSY,OILINTAKE	1	
18	HRC1100900B1	HEAD,LUBOILFILTER	1	
19	HRC1101000B4	GASKET,FILTERHEAD	1	
20	HRA1102000A3	FILTER, ENGINE OIL	1	
22	HH11030000B4	RETAINER,PRXLMGVALVE	1	
23	HH10130000A4	RETAINER,SPRING	1	
24	23414-180000	WASHER,SEALING	1	
25	HH10090000A4	SHIM	5	
26	HH10140000B4	SPRING,COMPRESSION	1	
27	HH10080000B4	VALVE,PRESSUREREGULATOR	1	
28	23871-020000	Plug, Pipe	1	
29	26106-080652	SCREW,HEXFLANGEHEADCAP	3	
30	HA09250000A3	SWITCH,OILPRESSURE	1	
31	23887-100002	SCREW,HEXAGONHEADCAP	1	
32	22312-060080	PIN, DOWEL (6-08)	2	
33	23414-100000	PLAIN WASHER (D10)	1	
34	HL03210000B4	TUBE,OILGAUGE	1	
35	HRA1103500A3	DIPSTICK	1	
36	26106-080162	SCREW,HEXFLANGEHEADCAP	1	
37	26106-080352	SCREW,HEXFLANGEHEADCAP	2	
40	HRC1101600B2	COOLER,OIL	1	
41	24311-000200	O-RING, DYNAMIC (Φ20)	1	
42	24311-000210	O-RING, DYNAMIC (Φ21)	1	
43	24321-000500	O-RING (D50)	1	
44	HRC1100901B1	HEAD,LUBOILFILTER	1	

FIG E011-2 4720	LUB. OIL SYSTEM	Year/Month 2020/02

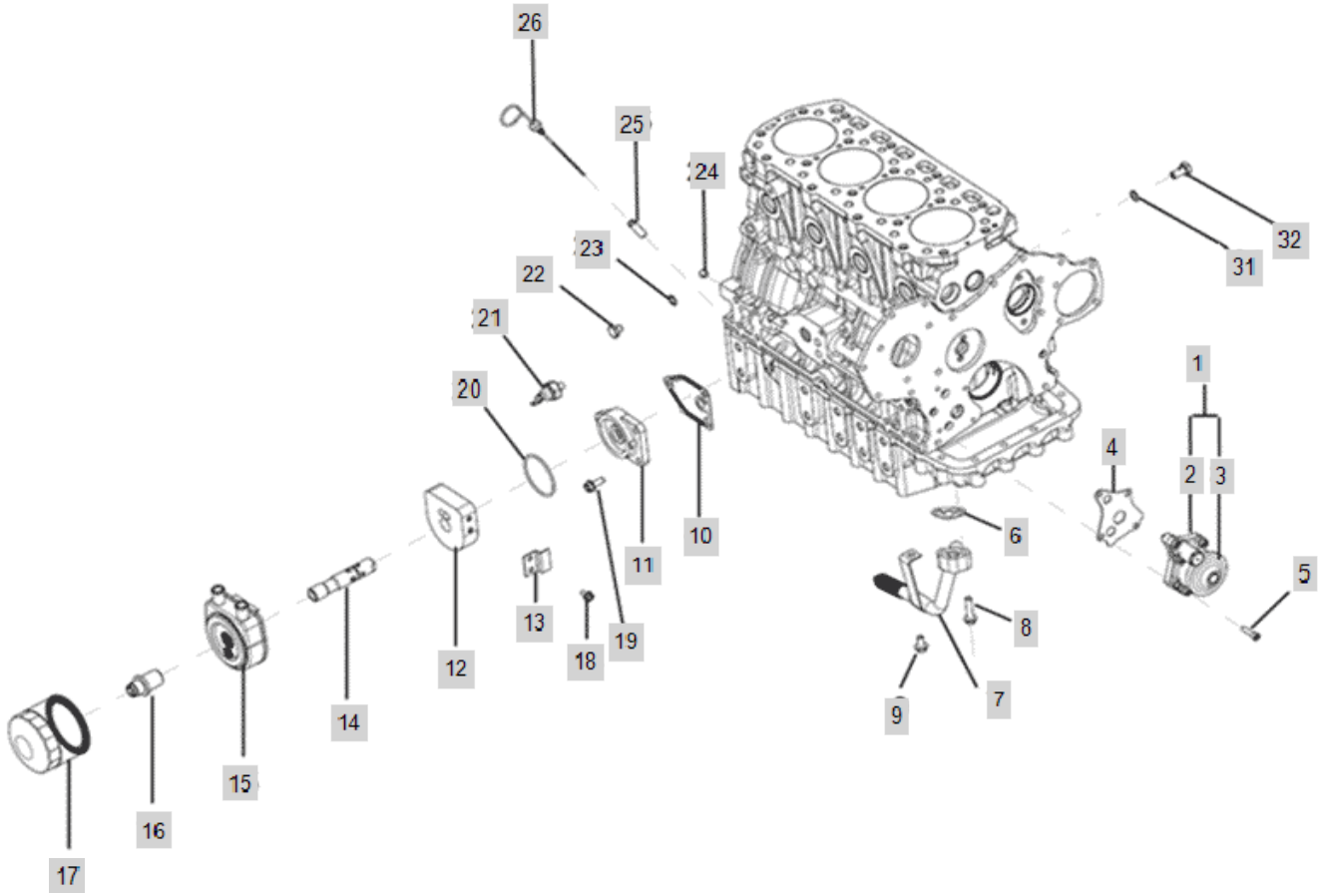

FIG E011-2 4720	LUB. OIL SYSTEM	Year/Month 2020/02

KeyNo.	Part Number	Part Name	Quantity	Other
1	HRA1100109A9	PUMP, LUBRICATING OIL	1	
2	HRA1100100A2	PUMP,LUBRICATINGOIL	1	
3	HRA1100112A3	GEAR,LUBRICATINGOILPUMP	1	
4	HRA1100600A4	GASKET,LUBOILPUMP	1	
5	26450-060252	SCREW,SOCKETHEADCAP	4	
6	HRD1100700A4	GASKET,OILPAN	1	
7	HRA1100800A2	PIPEASSY,OILINTAKE	1	
8	26106-080352	SCREW,HEXFLANGEHEADCAP	2	
9	26106-080162	SCREW,HEXFLANGEHEADCAP	1	
10	HRA1101000A4	GASKET,FILTERHEAD	1	
11	HRA1100900B3	HEAD,LUBOILFILTER	1	
12	EA00002818A	SPACER(PRESSURE C.V)	1	
13	EA00002900A	REINFORCEMENT BRACKET(COOLER SPACER)	1	
14	EA00002853A	BOLT(PRESSURE C.V)	1	
15	EA00000309A	OIL COOLER ASSY	1	
16	EA00000310A	BOLT COOLER, OIL	1	
17	EA00004647A	OIL FILTER	1	
18	26106-060122	HEX BOLT (6-12)	1	
19	26106-080202	SQR FLANGE BOLT	3	
20	24321-000600	SEAL,ORING	1	
21	HA09250000A3	SWITCH,OILPRESSURE	2	
22	23887-100002	SCREW,HEXAGONHEADCAP	1	
23	23414-100000	PLAIN WASHER (D10)	1	
24	HRT0300500A4	PLUG,EXPANSION	1	
25	HL03210000B4	TUBE,OILGAUGE	1	
26	HRA1101800A3	DIPSTICK	1	
31	23414-100000	PLAIN WASHER (D10)	1	
32	23887-100002	SCREW,HEXAGONHEADCAP	1	

FIG E012-1 4720	COOLING SYSTEM	Year/Month 2020/02

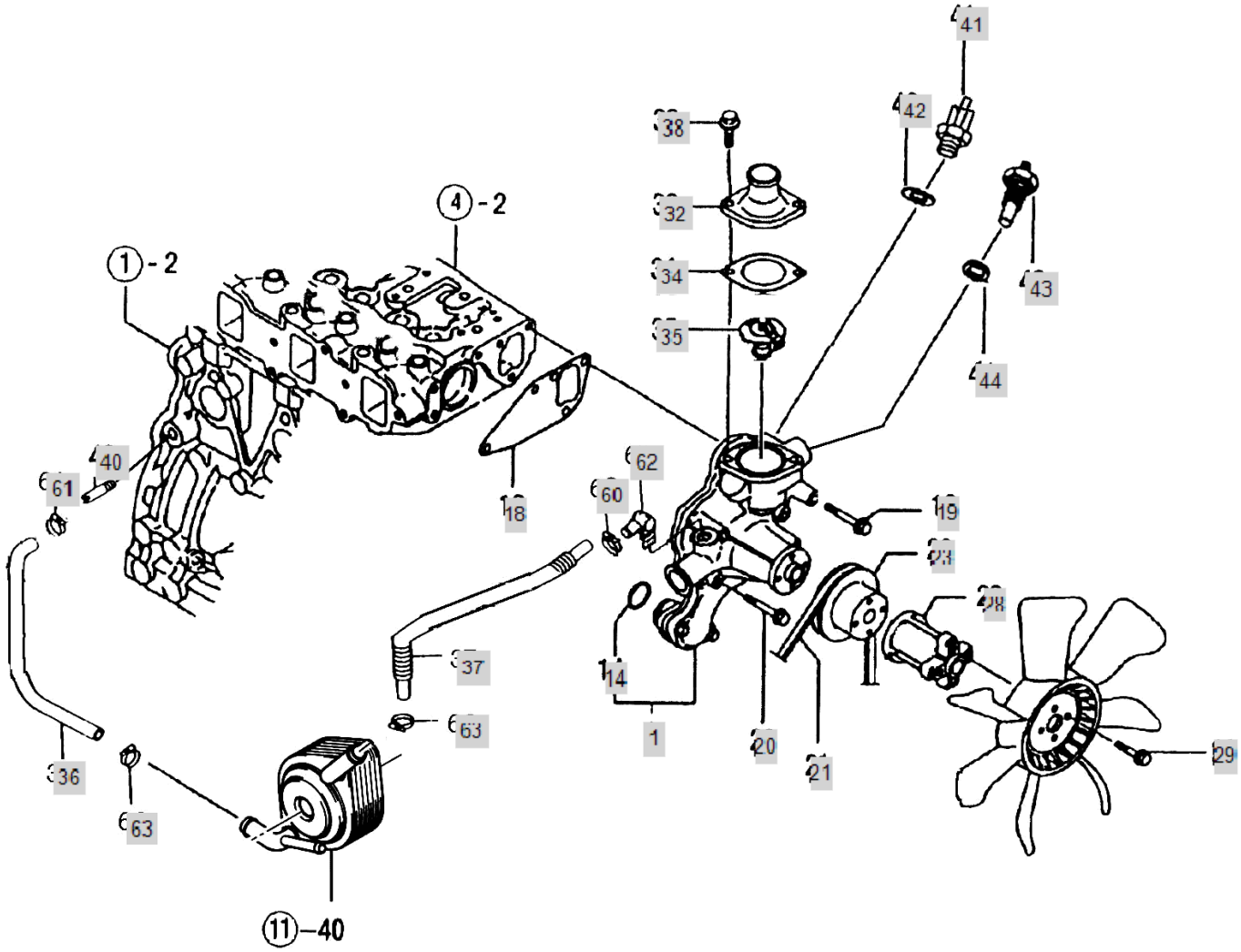

FIG E012-1 4720	COOLING SYSTEM	Year/Month 2020/02

KeyNo.	Part Number	Part Name	Quantity	Other
1	HRA1200100D1	COOLANT PUMP ASSY	1	
14	24341-000280	O-RING, FIX (Φ28)	1	
18	HRA1200200A3	GASKET,WATERPUMP	1	
19	26106-080552	HEX FLANGE BOLT (D80)	3	
20	26106-080602	SCREW,HEXFLANGEHEADCAP	1	
21	HRA1200600A4	BELT,V(A40.5")	1	
23	HK10120000A4	PULLEY,FAN	1	
28	HLY1208000A3	SPACER,COOLINGFAN	1	
29	26106-080652	SCREW,HEXFLANGEHEADCAP	4	
32	HC09160000B4	COVER, THERMOSTAT	1	
34	HA10670000B4	GASKET,THERMOSTAT	1	
35	HK10030000A3	THERMOSTAT	1	
36	HRC1205100A4	HOSE,PLAIN	1	
37	HRC1205200A4	HOSE,PLAIN	1	
38	26106-080182	SCREW,HEXFLANGEHEADCAP	2	
40	HRC1204000A4	NIPPLE,PLAINPIPE	1	
41	HH12210000A3	SENSOR,GLOWPLUG	1	
42	23414-160000	WASHER,SEALING	2	
43	HH12190000A3	WATER TEMP SENSOR	1	
44	23414-100014	PACKING,COPPER	1	
60	23000-019000	Clip, Hose (Φ19)	1	
61	23000-022000	CLAMP,HOSE	1	
62	CEE2080000A4	ELBOW,PLAINUNION	1	
63	23000-025000	CLAMP,HOSE	2	

FIG E012-2 4720	COOLING SYSTEM	Year/Month 2020/02

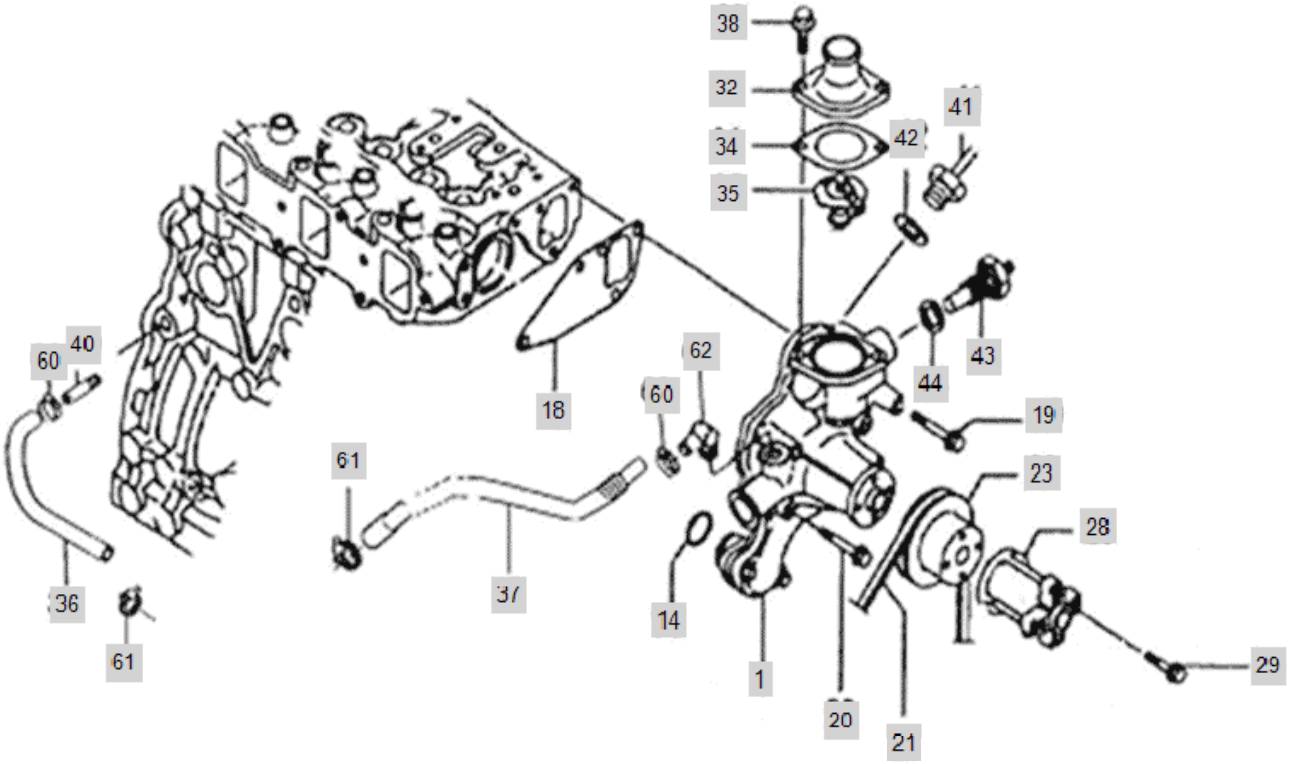

FIG E012-2 4720	COOLING SYSTEM	Year/Month 2020/02

KeyNo.	Part Number	Part Name	Quantity	Other
1	EA00003252C	WATER PUMP ASS'Y	1	
14	24341-000280	O-RING, FIX (Φ28)	1	
18	HRA1200200A3	GASKET,WATERPUMP	1	
19	26106-080552	HEX FLANGE BOLT (D80)	3	
20	26106-080602	SCREW,HEXFLANGEHEADCAP	1	
21	EA00004415A	V-BELT(GREEN 2 A40.5")	1	
23	EA00003004A	V-PULLEY(FAN)	1	
28	EA00000543A	SPACER(FAN)	1	
29	26106-080302	HEX BOLT, FLANGE	1	
32	HC09160000B4	COVER, THERMOSTAT	1	
34	HA10670000A4	GASKET,WATER PUMP -> HA10670000B4	1	
35	HK10030000A3	THERMOSTAT	1	
36	EA00004503A	LUB COOLER HOSE(A)	1	
37	EA00002855A	COOLANT HOSE B, OIL COOLER	1	
38	26106-080182	SCREW,HEXFLANGEHEADCAP	2	
40	HRC1204000A4	NIPPLE,PLAINPIPE	1	
41	HH12210000A3	SENSOR,GLOWPLUG	1	
42	23414-160000	WASHER,SEALING	1	
43	HH12190000A3	WATER TEMP SENSOR	1	
44	23414-100014	PACKING,COPPER	1	
60	23000-022000	CLAMP,HOSE	2	
61	23000-025000	CLAMP,HOSE	2	
62	CEE2080000A4	ELBOW,PLAINUNION	1	

FIG E013 4720	FUEL INJECTION PUMP	Year/Month 2020/02

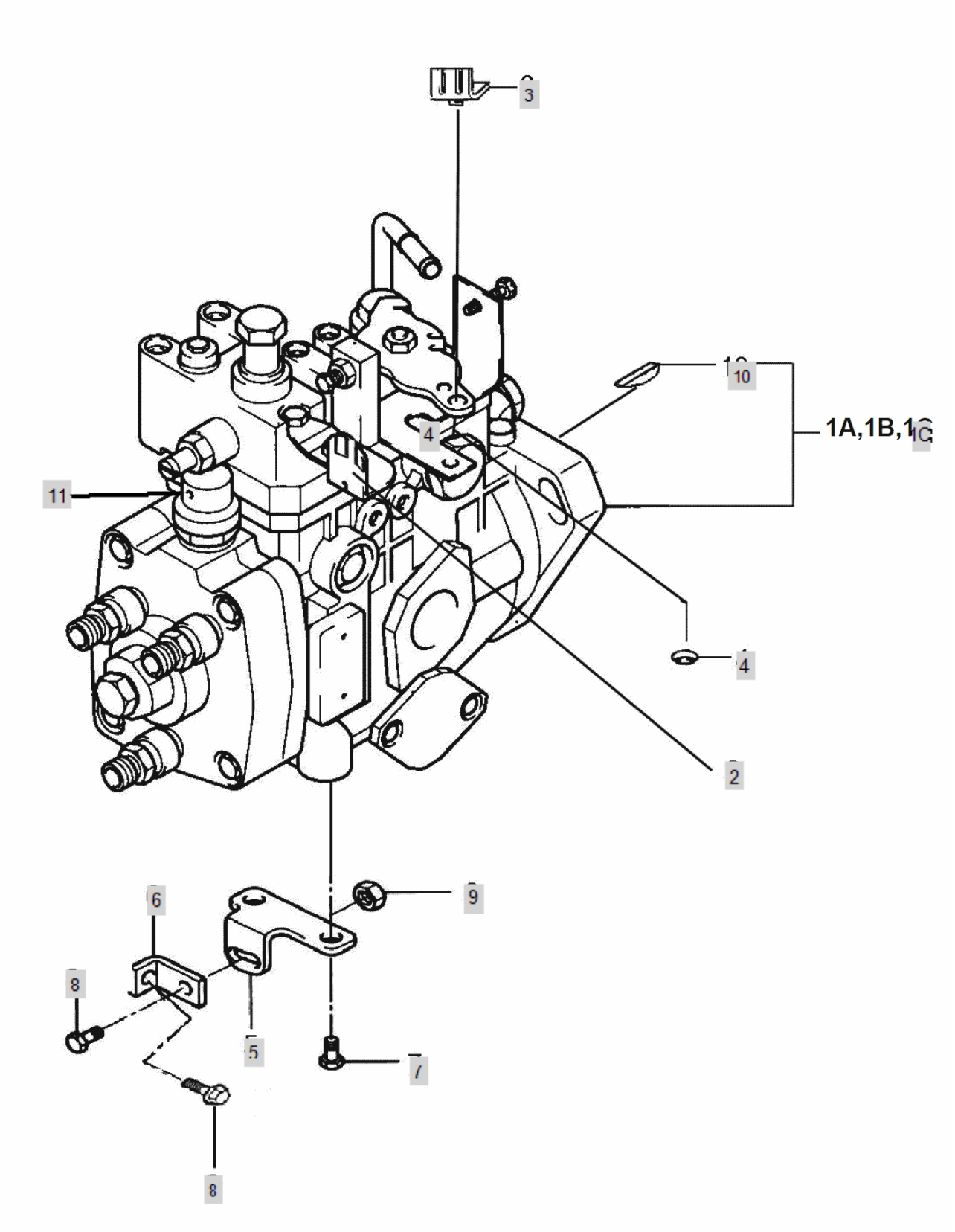

FIG E013 4720	FUEL INJECTION PUMP	Year/Month 2020/02

KeyNo.	Part Number	Part Name	Quantity	Other
1C	HRA130010DB1	FUEL INJECTION PUMP (A2300N2)	1	
2	HRA1300600A4	SUPPORT(AXLE LEVER)	1	
3	HRA1300700B4	HOOK(AXLE LEVER)	1	
4	22272-000050	RING, CIRCLIP (Φ 05)	1	
5	HRA130020DA4	BRACKET(B),PUMP	1	
6	HRA130030DA4	BRACKET(A),PUMP	1	
7	26106-100162	SCREW,HEXFLANGEHEADCAP	2	
8	26106-080162	SCREW,HEXFLANGEHEADCAP	2	
9	26367-080002	HEX FLANGE NUT (Φ8)	1	
10	HRA0702100A4	KEY,PLAINWOODRUFF	1	
11	HRU0170210A9	VALVE,FUELSTOP	1	

FIG E015 4720	FUEL INJECTION SYSTEM AND VALVE	Year/Month 2020/02

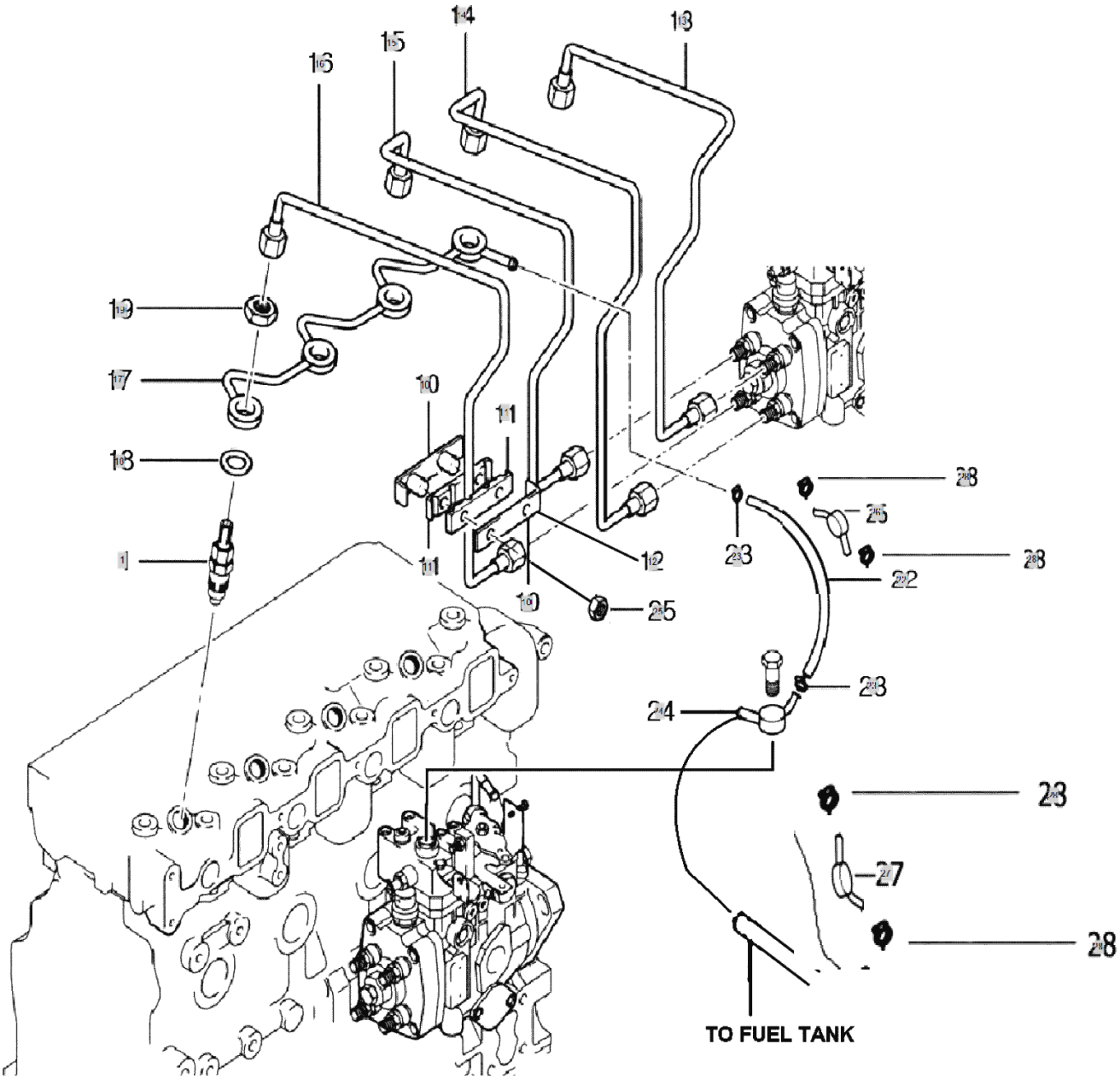

FIG E015 4720	FUEL INJECTION SYSTEM AND VALVE	Year/Month 2020/02

KeyNo.	Part Number	Part Name	Quantity	Other
1	HK12020000A3	INJECTOR, FUEL	4	
10	HRA1502600B4	BRACKET,PIPE	1	
11	HRA1502700A4	RUBBER,BRACKET	2	
12	HRA1502800A4	CLAMP,TUBE	1	
13	HRA150050DB0	PIPE ASSY, FUEL SUPPLY A	1	
14	HRA150060DB0	PIPE ASSY, FUEL SUPPLY (B)	1	
15	HRA150070DBO	FUEL PIPE ASS'Y(C)	1	
16	HRA150080DB0	PIPE ASSY, FUEL SUPPLY D	1	
17	HRA1500900C3	PIPE ASSY, FUEL RETURN	1	
18	HK13440000A4	GASKET,FUELMANIFOLD	4	
19	HK13450000A4	NUT,REGULARHEXAGON	4	
22	HRA1501400B4	TUBE,FUELDRAIN	1	
23	23080-009000	CLAMP,VBAND	2	
24	HRA1502400B4	CONNECTOR,BANJO	1	
25	26367-060002	Nut, Hexa (Φ6)	2	
26	NTE1300000A4	CHECKVALVE	1	
27	NTE130000A4US	FUEL LINE CHECK VALVE-DOMESTIC	1	
28	23000-013000	Clip, Hose (Φ13)	4	

FIG E016 4720	FUEL SYSTEM	Year/Month 2020/02

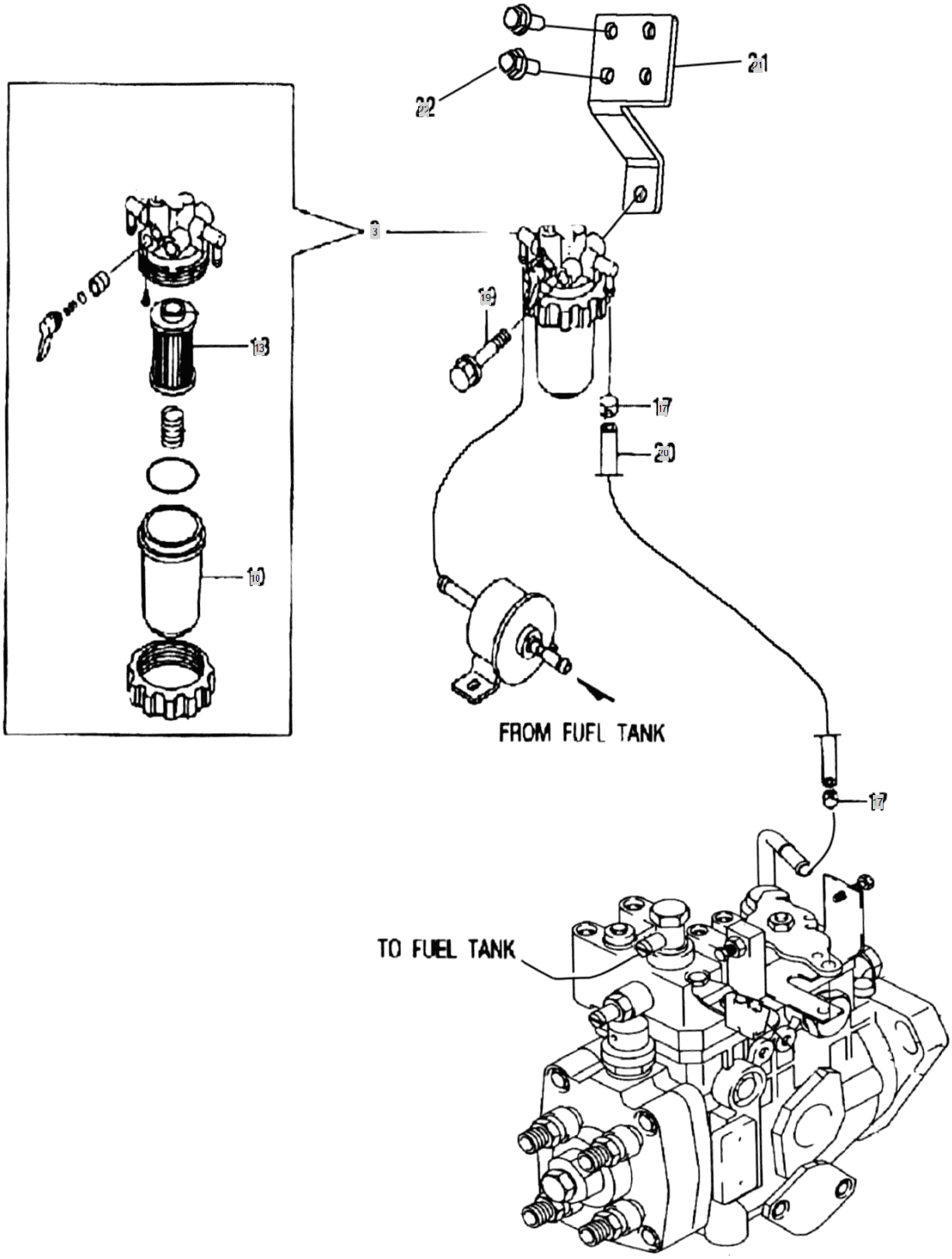

FIG E016 4720	FUEL SYSTEM	Year/Month 2020/02

KeyNo.	Part Number	Part Name	Quantity	Other
3	HM13010000B3	FUEL FILTER ASS'Y	1	
10	HA13050000A4	CUP(FILLTER)	1	
13	HA13040000A4	ELEMENT, FUEL FILTER	1	
17	23000-013000	Clip, Hose (Φ13)	2	
19	26106-080652	SCREW,HEXFLANGEHEADCAP	1	
20	HF20220000A4	HOSEB	1	
21	HRA4100600A4	BRACKET,FILTER	1	
22	26106-080162	SCREW,HEXFLANGEHEADCAP	2	

FIG E017 4720	STARTING MOTOR	Year/Month 2020/02

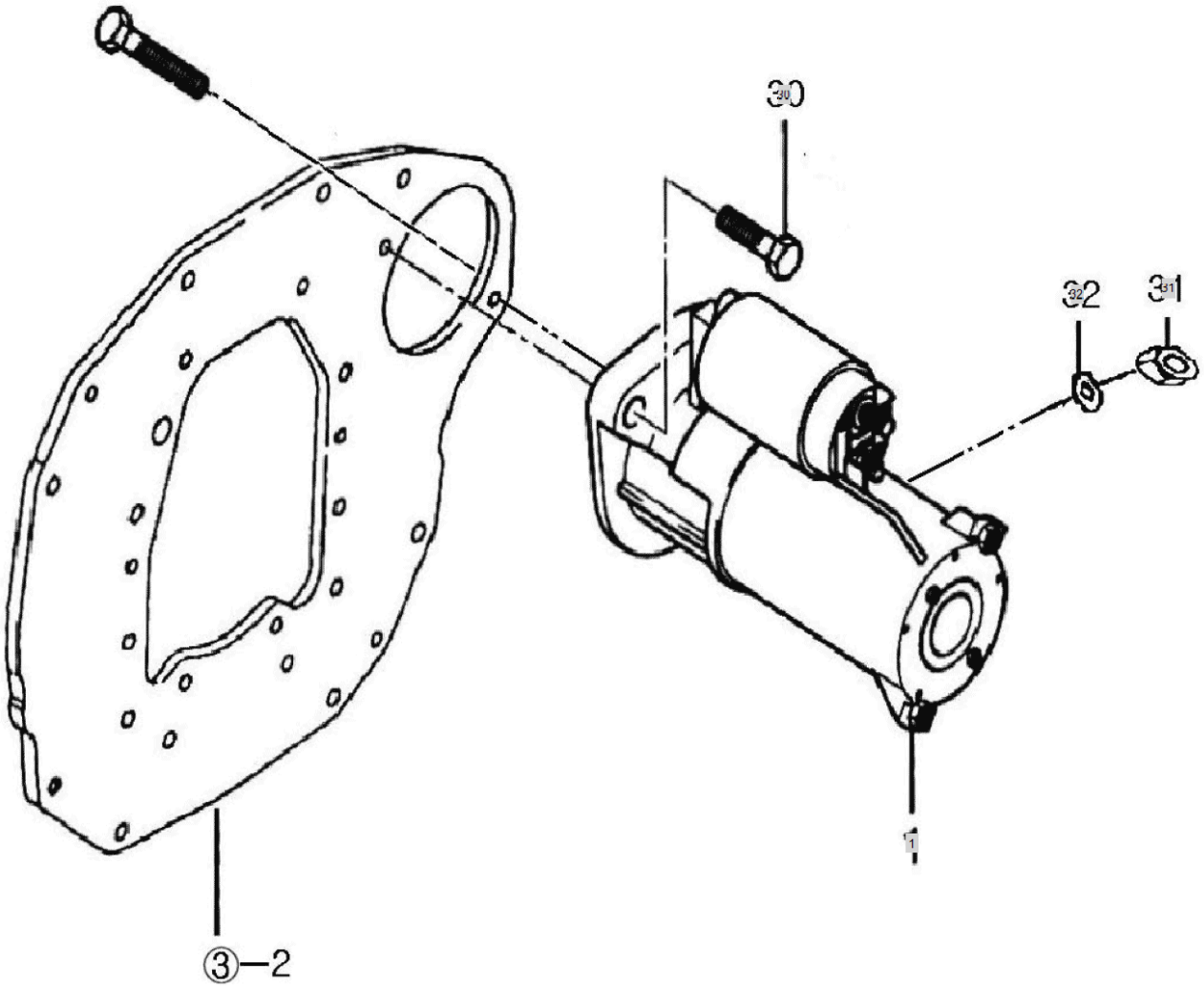

FIG E017 4720	STARTING MOTOR	Year/Month 2020/02

KeyNo.	Part Number	Part Name	Quantity	Other
1	HRD1700100A1	STARTING MOTOR	1	
30	26013-120282	SCREW,CAPTIVEWASHERCAP	1	
31	26716-080002	NUT,HEX (D8)	1	
32	22217-080000	WASHER, SPRING (Φ 08)	1	

FIG E018 4720	GENERATOR AND ELECTRIC DEVICE	Year/Month 2020/02

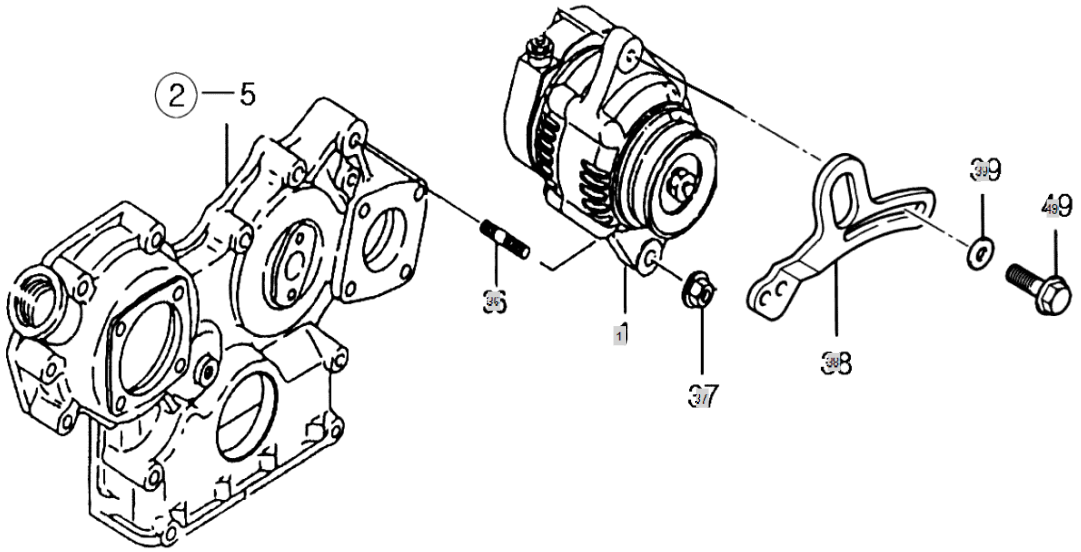

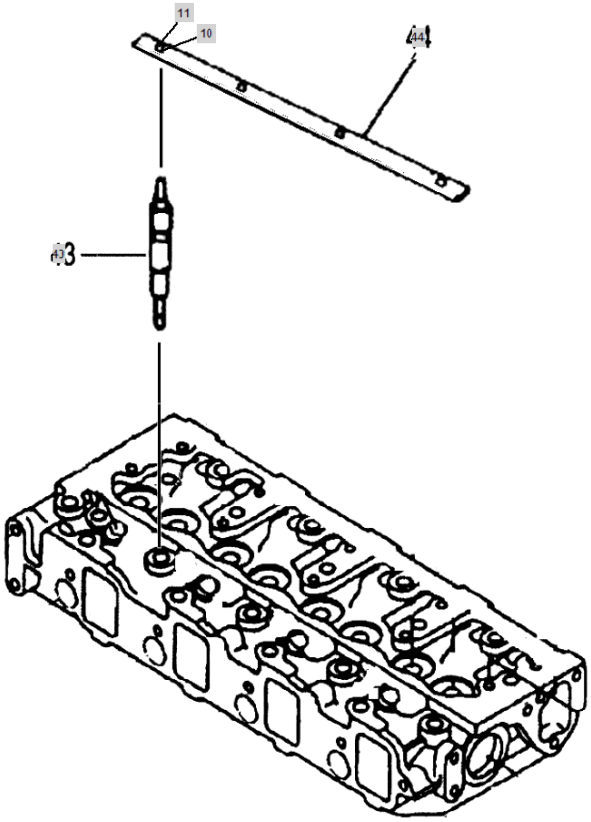

FIG E018 4720	GENERATOR AND ELECTRIC DEVICE	Year/Month 2020/02

KeyNo.	Part Number	Part Name	Quantity	Other
1	HN4101000DA2	ALTERNATOR (12V-50A)	1	
14	HRA1801400A3	BRACKET,WIREPROTECTION	1	
36	HRA1803600A4	STUD	1	
37	26367-100002	NUT,HEXAGONFLANGE	1	
38	HN41020000A3	BRACKET,ALTERNATOR	1	
39	RR15170000A4	WASHER 8.5X20X3.2	1	
43	HK15170000A4	PLUG, PREHEAT	4	
44	HRA1801300A4	CONNECTOR,ELECTRICAL	1	
49	26013-080302	HEX BOLT W/WASHER	1	
10	HA00000920A	HARNESS H	1	
11	HA00000861C	HARNESS A	1	

FIG S001 4720	LEVER ACCELERATOR	Year/Month 2020/02

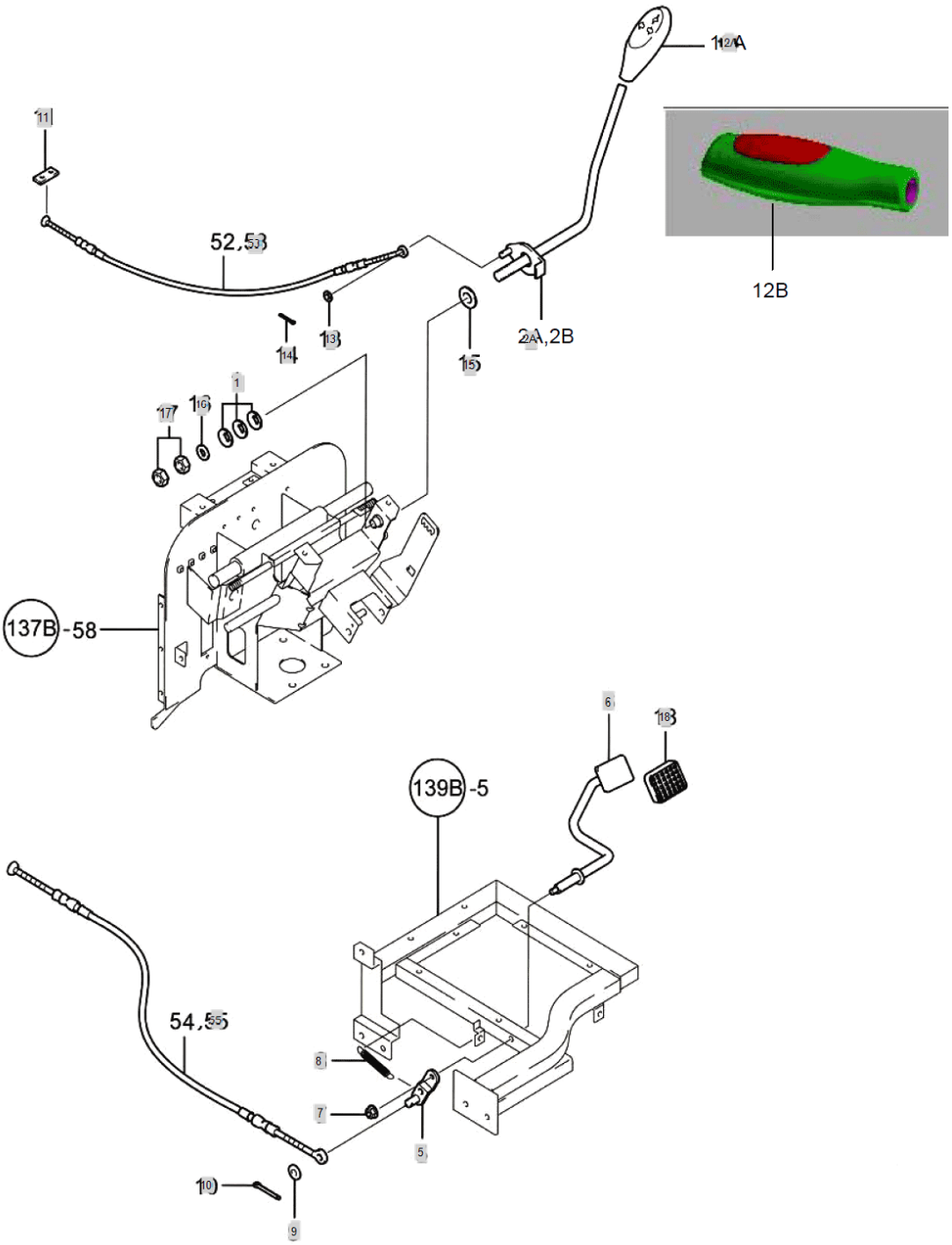

FIG S001 4720	LEVER ACCELERATOR	Year/Month 2020/02

KeyNo.	Part Number	Part Name	Quantity	Other
1	TC45010000A4	SPRINGWASHER10	3	
2A	NT01200000B3	LEVER	1	
5	NT01150000A4	ARM, ACCELERATOR PEDAL	1	
6	NT01290000D2	PEDAL ASS'Y, ACCELLERATOR	1	
7	26367-060002	Nut, Hexa (Φ6)	1	
8	TT98200000A4	RETURNSPRING	1	
9	22137-060000	WASHER , PLAIN	1	
10	22417-160180	PIN , COTTER (1-18)	1	
11	TC45040000A4	RUBBER	1	
12A	NT01220000B3	KNOB, ACCELERATOR	1	
13	22137-060000	WASHER , PLAIN	1	
14	22417-160180	PIN , COTTER (1-18)	1	
15	TC45060000A4	FRICTIONPLATE	1	
16	22137-100000	WASHER, PLAIN (Φ 10)	1	
17	26716-100002	Nut, Hexa (Φ10)	1	
18	TN01330000A4	RUBBERCOVER	1	
53	NT01530000B3	ACCELERATOR WIRE, LEVER	1	
55	NT01550000B3	ACCELERATOR PEDAL WIRE	1	

FIG S002 4720	STEERING COLUMN	Year/Month 2020/02

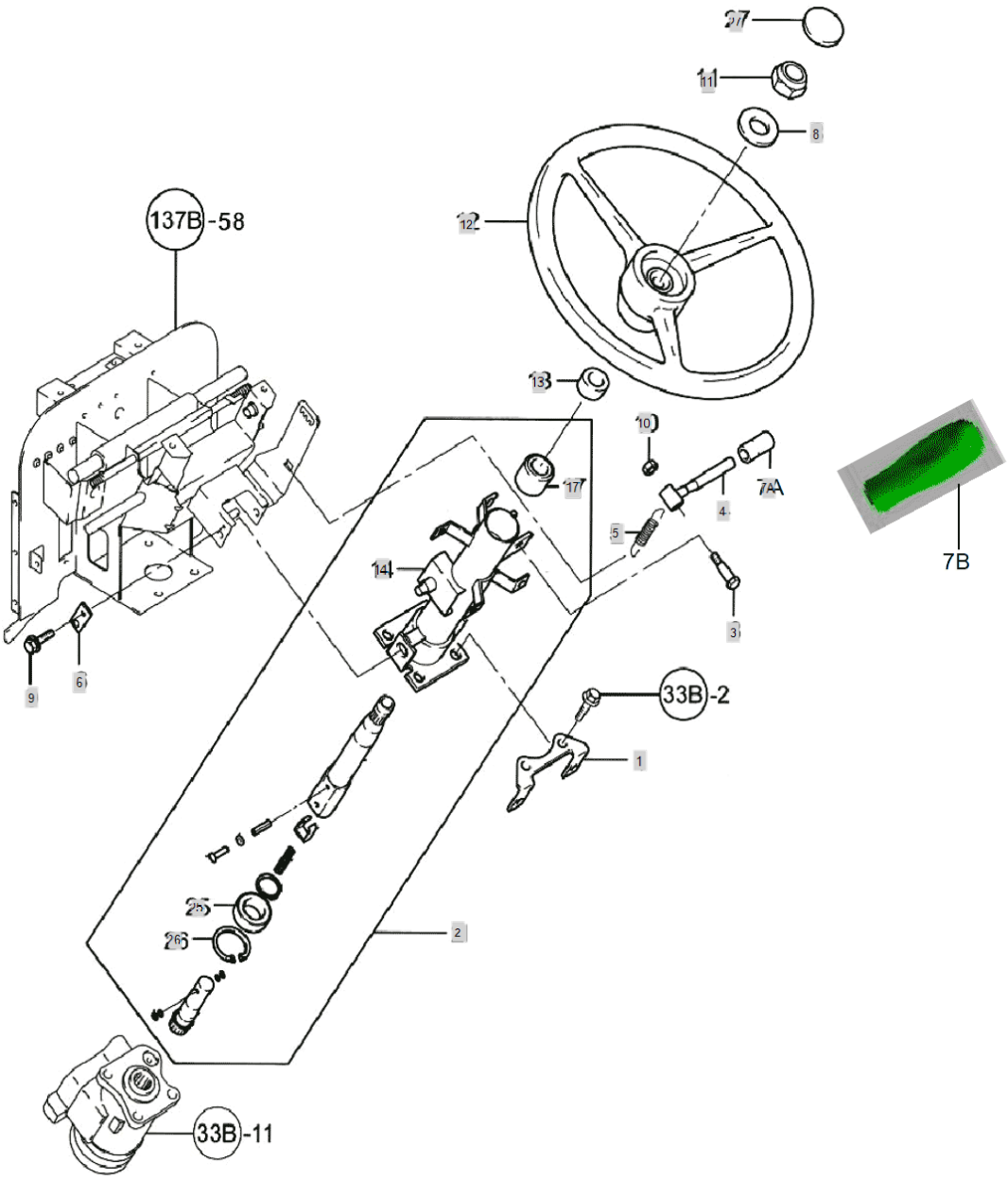

FIG S002 4720	STEERING COLUMN	Year/Month 2020/02

KeyNo.	Part Number	Part Name	Quantity	Other
1	TC65010000A4	BRACKET(COLUMCOVERR)	1	
2	NT0141A000A2	COLUMN ASS'Y	1	
3	TC65030000A4	TILTLEVERPIN	1	
4	TC65040000A4	TILTLEVER	1	
5	TC65050000A4	TILTSPRING	1	
6	TC65060000A4	TILTPINASS'Y	2	
7A	TB16020000A4	LEVERKNOB	1	
8	22137-160000	WASHER, PLAIN (Φ 16)	1	
9	26106-080122	Bolt, Hexa (8-12)	2	
10	26347-080002	Unut	1	
11	26357-160002	NUT	1	
12	TZ29030000A1	STEERING WHEEL	1	
13	TC65130000A4	COVER,SHAFT	1	
14	NT0141A100A2	STEERINGCOLUMN	1	
16	TC65020300A9	STEERINGSHAFT1	1	
17	TC65020400A9	COLUMNBUSH	1	
24	22242-000200	SNAP RING, SHAFT (Φ 20)	1	
25	24107-060044	Bearing, Ball (#6004) Dubble Cap	1	
26	22252-000420	RING, CIRCLIP (Φ 42)	1	
27	TZ29040000A4	STEERING WHEEL CAP -> TA00026432A	1	

FIG S003 4720	REVERSER ASSY	Year/Month 2020/02

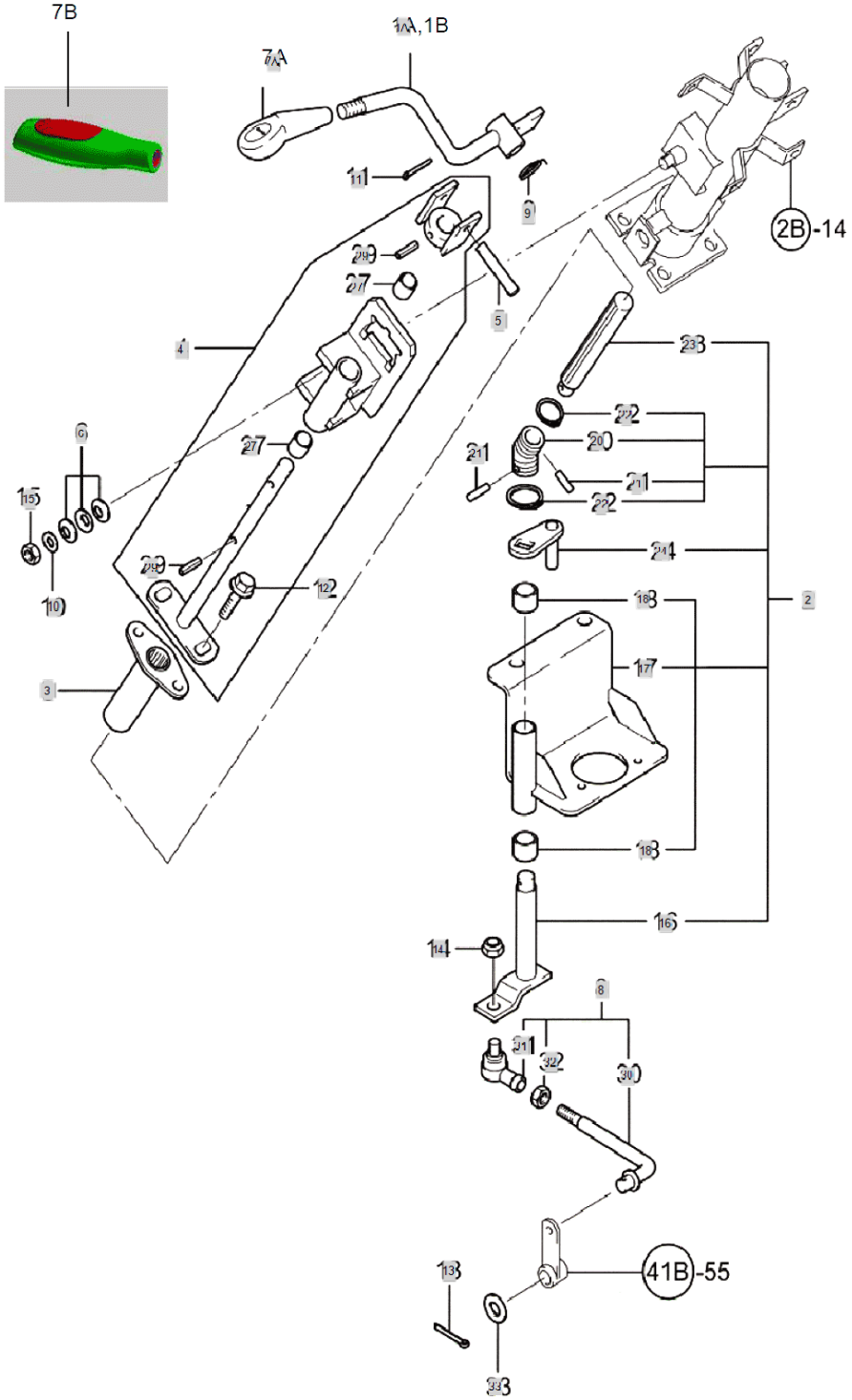

FIG S003 4720	REVERSER ASSY	Year/Month 2020/02

KeyNo.	Part Number	Part Name	Quantity	Other
1A	NT03010000C1	REVERSER LEVER	1	
2	NT03000999A9	REVERSERSHAFTASS`Y	1	
3	TC94030000C4	COUPLING	1	
4	TC94040000A4	GEAR 4, MAIN SHIFT	1	
5	TC94050000A4	PIN(8*52)	1	
6	TC94060000A4	PRING12	3	
7A	NT01230000A3	KNOB, SHUTTLE	1	
8	NT01050099A9	RODA'SSY[F-R]	1	
9	TC94090000A4	RETURNSPRING(F-R)	1	
10	22137-100000	WASHER, PLAIN (Φ 10)	1	
11	22417-200300	PIN , COTTER (2-30)	1	
12	26106-080162	SCREW,HEXFLANGEHEADCAP	2	
13	22417-250200	PIN , COTTER (2-20)	1	
14	26347-080002	Unut	1	
15	26347-100002	U-NUT	1	
16	NT01010000A4	SHAFT,REVERSER	1	
17	NT01020000A3	BRACKET,REVERSERSHAFT	1	
18	24550-016150	DRYBUSH	2	
20	TC94020300A4	JOINT ASSY	1	
21	TC94020302A9	SHAFTASSY	2	
22	TC94020303A9	SNAP RING	2	
23	NT01030000A4	SHAFT[INSIDE]	1	
24	NT01040000A4	JOINT	1	
27	24550-015120	DRYBUSH	2	
29	22351-060032	PIN, SPRING (6-32)	2	
30	NT01050000B4	ROD(F-R)	1	
31	TC94080200A4	RODEND	1	
32	26716-080002	NUT,HEX (D8)	1	
33	22117-080000	WASHER, PLAIN (Φ 08)	1	

FIG S004 4720	FRONT AXLE BRACKET	Year/Month 2020/02

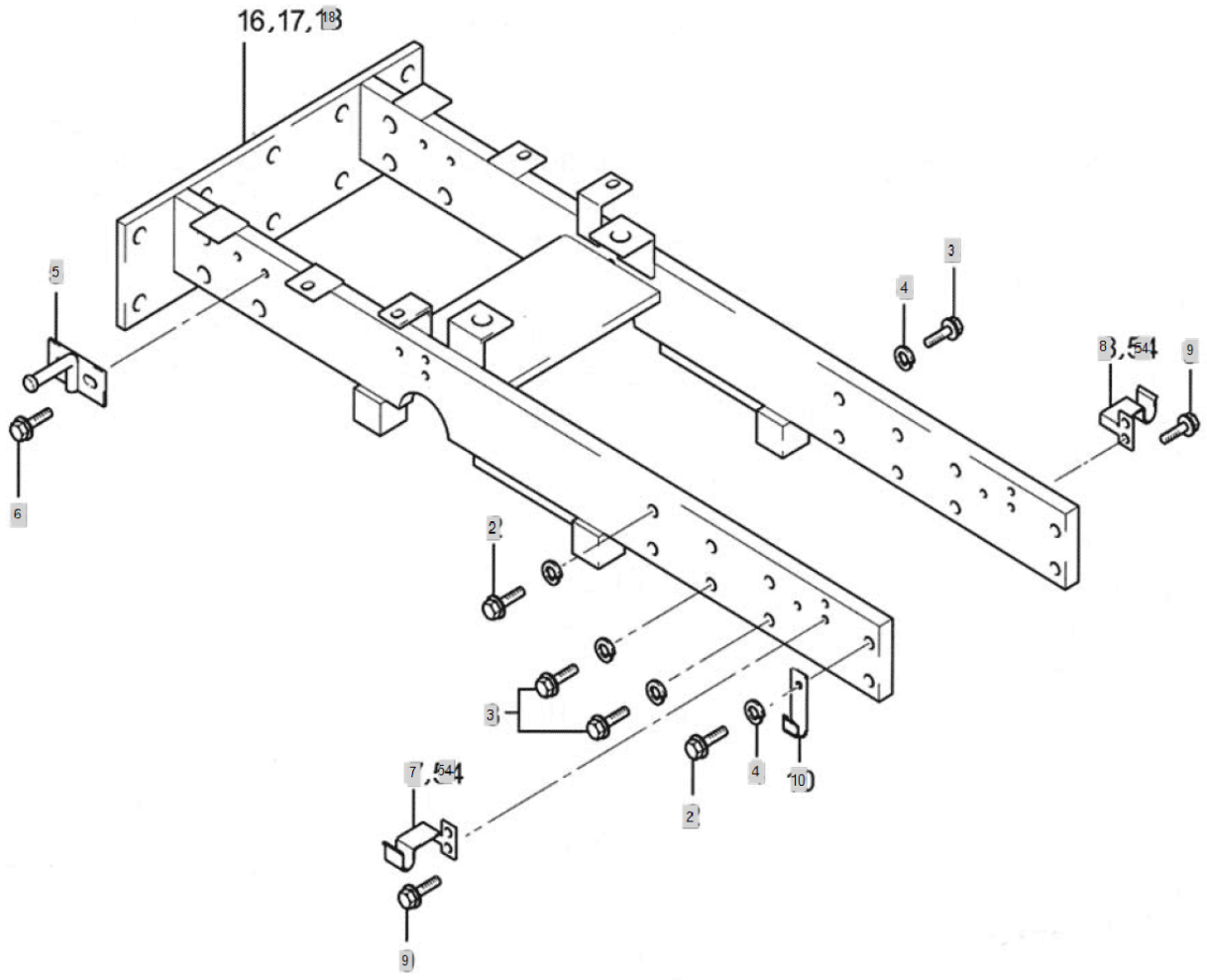

FIG S004 4720	FRONT AXLE BRACKET	Year/Month 2020/02

KeyNo.	Part Number	Part Name	Quantity	Other
2	TT08200000A4	BOLT	2	
3	TT08230000A4	BOLT	14	
4	TT08220000A4	LOCKSPRINGWASHER	16	
5	NT04410000B4	HINGE, FRONT MASK	2	
6	26106-080162	SCREW,HEXFLANGEHEADCAP	4	
7	NT04140000A4	SIDECOVERHINGE(L)	1	
8	NT04150000A4	SIDECOVERHINGE(R)	1	
9	26106-080162	SCREW,HEXFLANGEHEADCAP	8	
10	NT04100000A4	WIRECLAMP	5	
18	NT0418E000G0	FRONT AXLE BRACKET ASS'Y	1	
54	NT04540000A4	HINGE,SIDECOVER	2	

FIG S009 4720	CENTER PIN SUPPORTER	Year/Month 2020/02

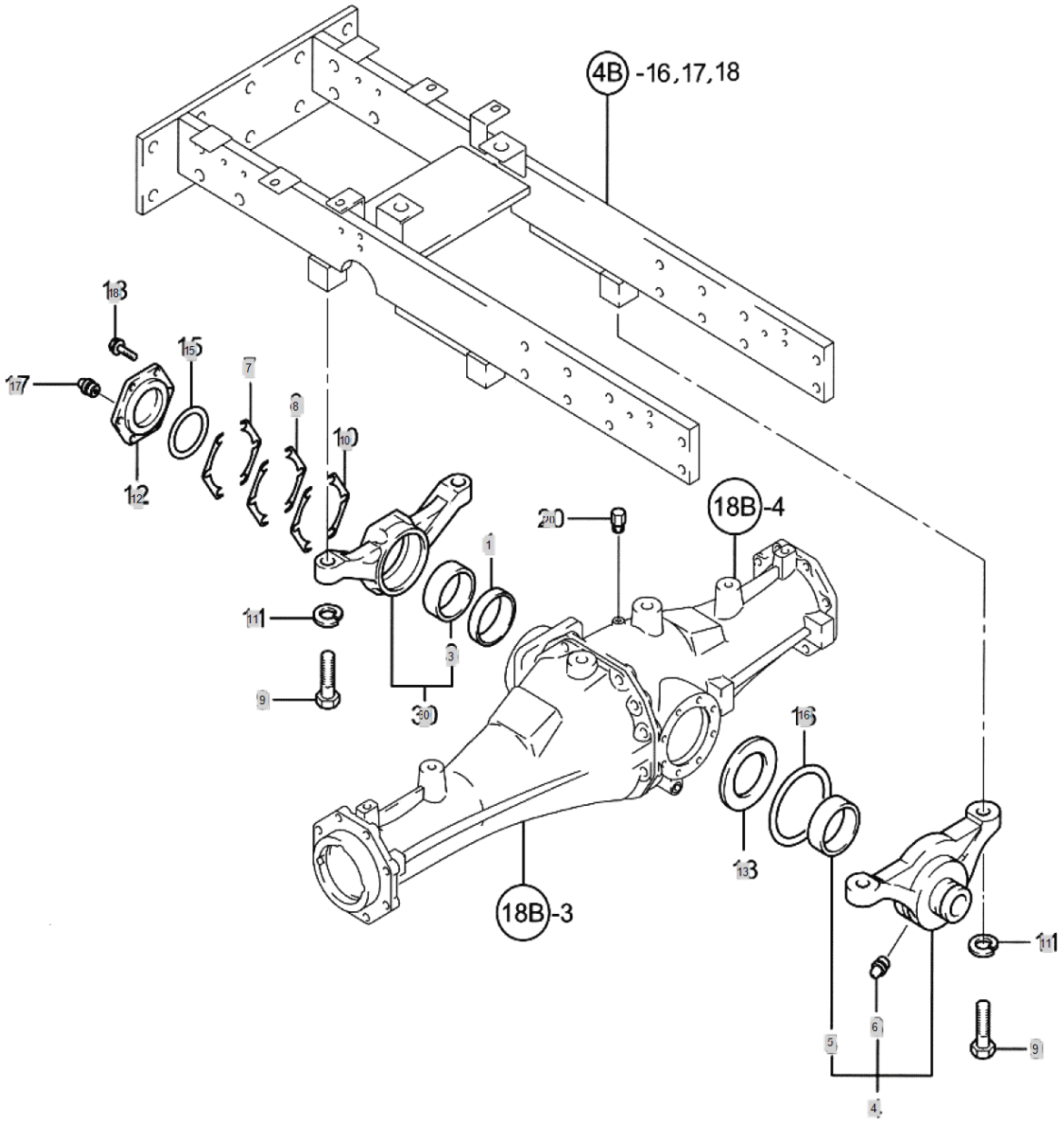

FIG S009 4720	CENTER PIN SUPPORTER	Year/Month 2020/02

KeyNo.	Part Number	Part Name	Quantity	Other
1	TT09010000A3	OILSEAL	1	
3	TT09030000A3	BUSH	1	
4	TT09040000A9	AXLESUPPORTASSY	1	
5	TT09030000A3	BUSH	1	
6	TA27160000A4	GREASE NIPPLE	1	
7	TT09070000A4	SHIMA	8	
8	TT09080000A4	SHIMB	6	
9	TT09090000A4	Bolt	4	
10	TT09100000A4	SHIMC	4	
11	TT09110000A4	LOCKSPRINGWASHER	4	
12	TT09120000A3	COVER	1	
13	TT09130000A4	THRUSTWASHER	1	
15	24321-000750	SEAL,ORING	1	
16	24321-001150	O-RING(G115)	1	
17	TA27160000A4	GREASE NIPPLE	1	
18	26013-080252	Bolt, Hexa (8-25)	6	
20	TD20350000A4	AIRBREEDER	1	
30	TL09300000A9	AXLE.SUPORT	1	

FIG S010-2 4720	TIE ROD - 20 SERIES EARLY VERSION	Year/Month 2020/02

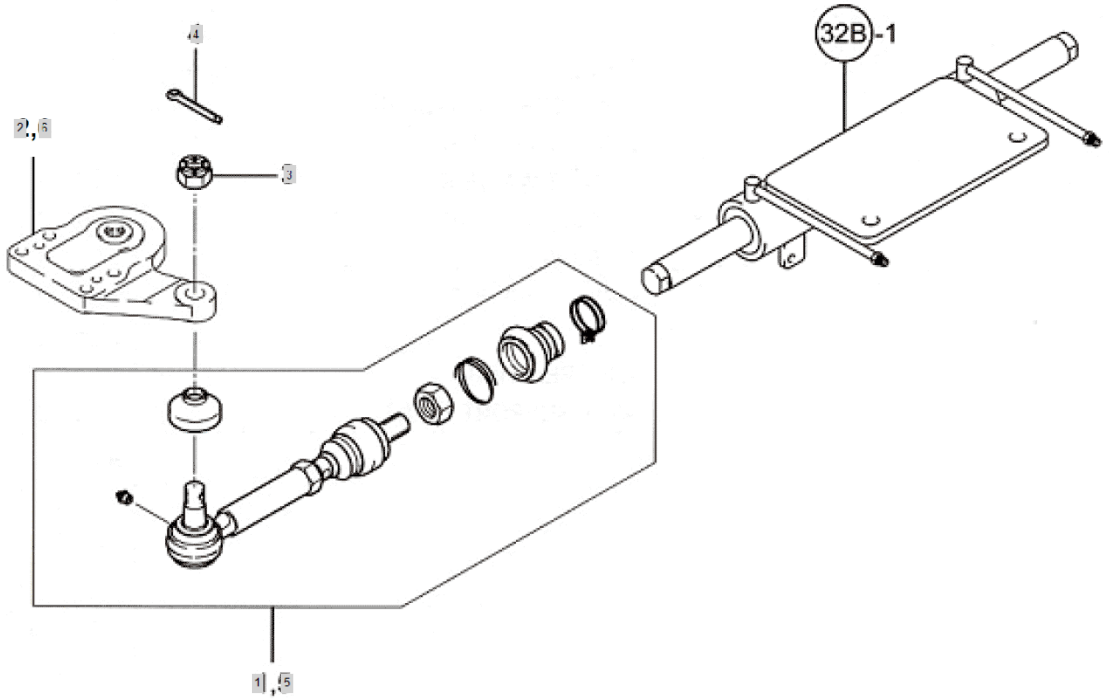

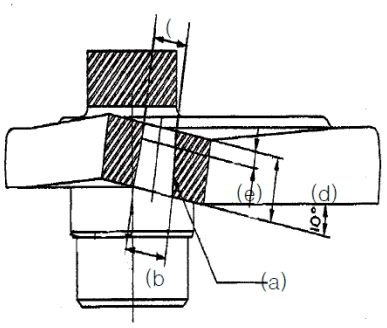

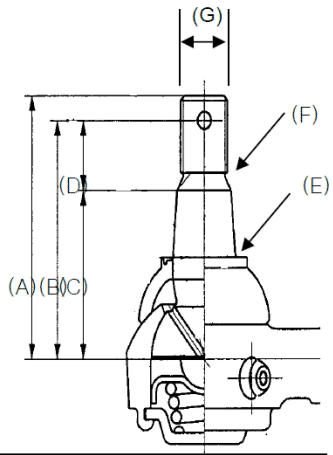

	NT19010000B1,NT19020000B1
(a)	Taper1/6
(b)	Ø16.05
(c)	Ø13.05
(d)	18mm
(e)	4.5mm

	NT3240H000A3,NT3241H000A3
(A)	53mm
(B)	48mm
(C)	34mm
(D)	14mm
(E)	Taper 1/6
(F)	M12 X P1.25 (8mm)
(G)	8mm (THREAD)

FIG S010-2 4720	TIE ROD - 20 SERIES EARLY VERSION	Year/Month 2020/02

KeyNo.	Part Number	Part Name	Quantity	Other
1	NT32400000A3	TIE ROD ASSY (LH)	1	
2	NT19010000B1		1	
3	TC56030000A4	NUT	2	
4	22417-400400	PIN , COTTER (3-35)	2	
5	NT32410000A3	TIERODA'SSY[RH]	1	
6	NT19020000B1		1	

FIG S010-4 4720	TIE ROD - 20 SERIES CURRENT VERSION	Year/Month 2020/02

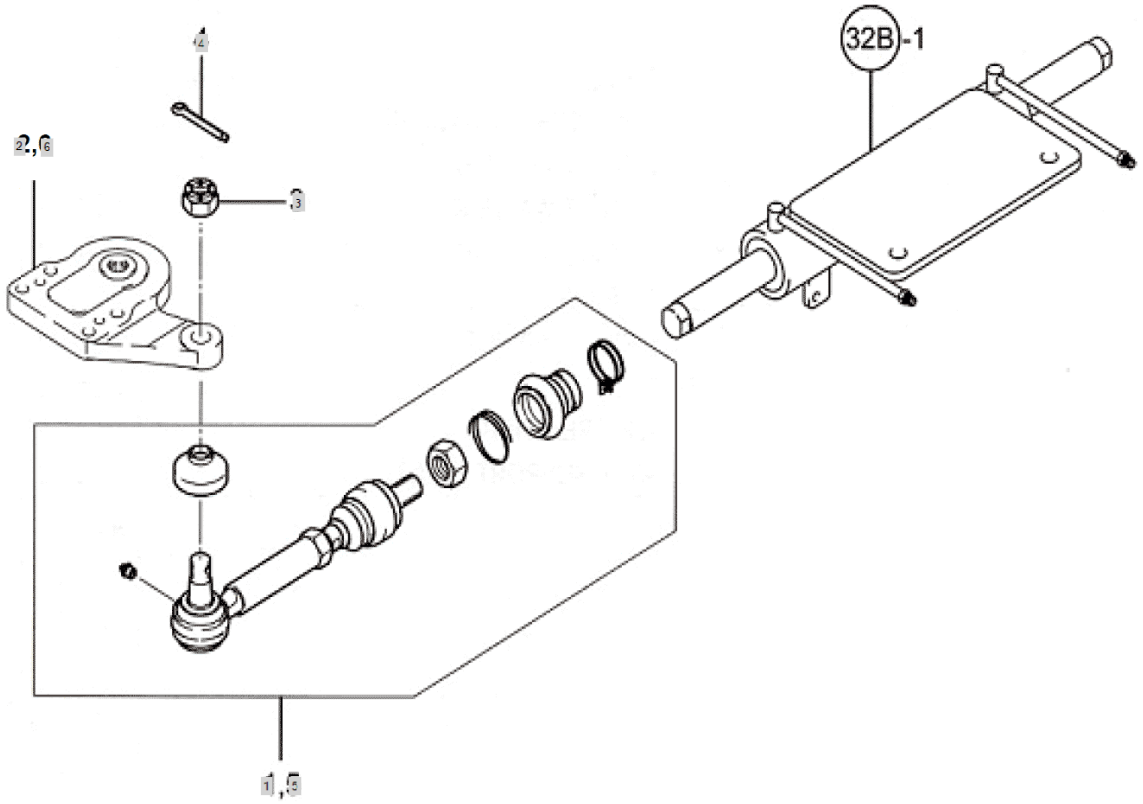

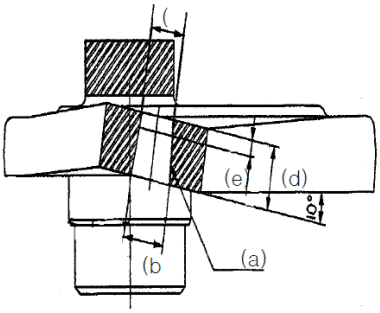

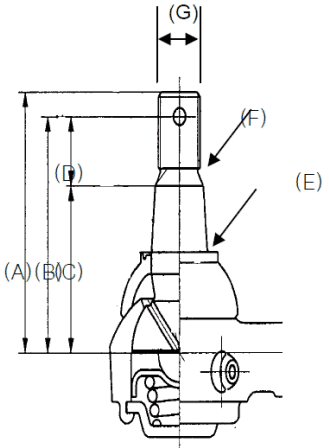

	NT19010000C1,NT19020000C1
(a)	Taper 1/10
(b)	Ø20(+0,-0.1)
(c)	Ø17.8
(d)	22mm
(e)	delete

	NT3240H000B3,NT3241H000B3
(A)	60.5mm
(B)	54.5mm
(C)	41.5mm
(D)	13mm
(E)	Taper 1/10
(F)	M16 X P1.5
(G)	12mm (THREAD)

FIG S010-4 4720	TIE ROD - 20 SERIES CURRENT VERSION	Year/Month 2020/02

KeyNo.	Part Number	Part Name	Quantity	Other
1	NT3240H000B3	TIE ROD ASSY (LH)	1	
2	NT19010000C1	KNUCKLE ARM (LH)	1	
3	TT10020000A4	CASTLE NUT M16	2	
4	22417-400400	PIN , COTTER (3-35)	2	
5	NT3241H000B3	TIE ROD ASSY (RH)	1	
6	NT19020000C1	KNUCKLE ARM (RH)	1	

FIG S010-5 4720	TIE ROD - UPDATE KIT FOR EARLY VERSION	Year/Month 2020/02

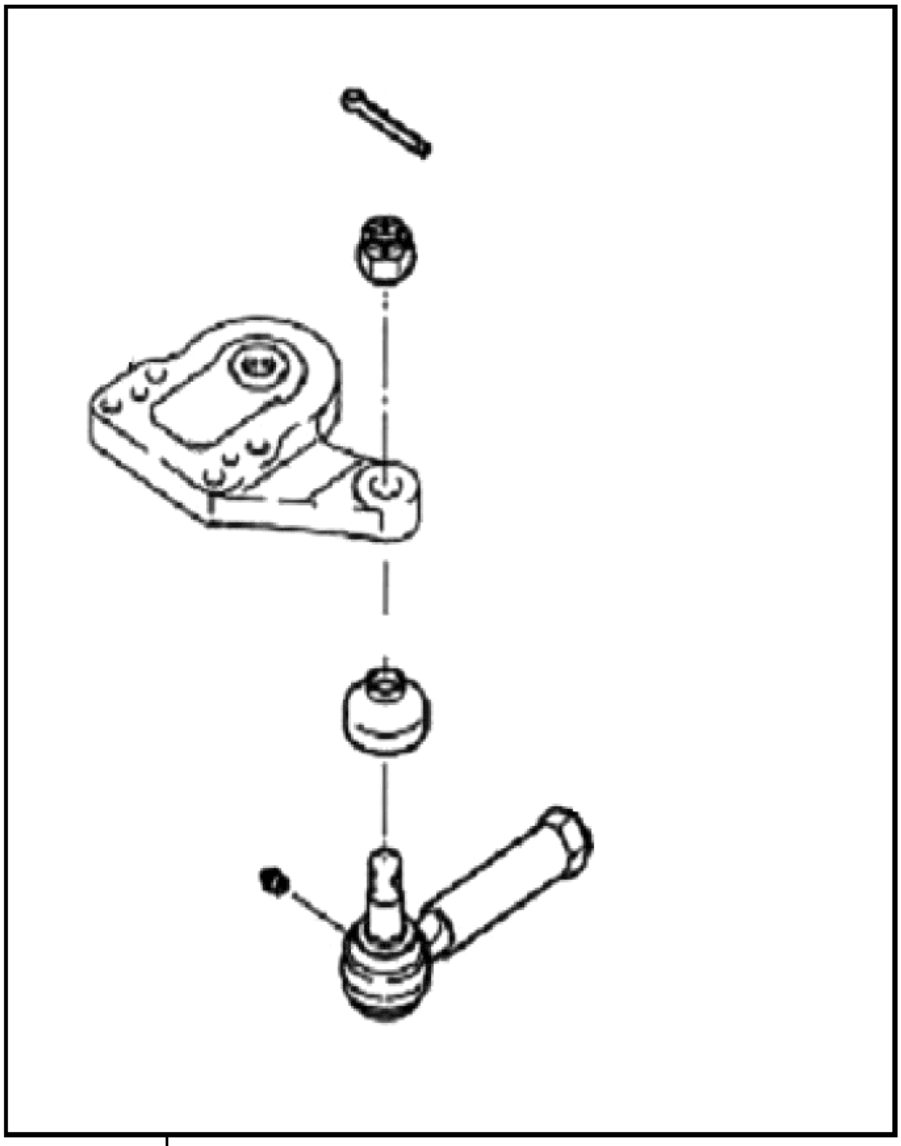

1A,1B

FIG S010-5 4720	TIE ROD - UPDATE KIT FOR EARLY VERSION	Year/Month 2020/02

KeyNo.	Part Number	Part Name	Quantity	Other
1B	NTA320H000A9	TIE-ROD KIT(20S)	1	

FIG S012 4720	RING GEAR	Year/Month 2020/02

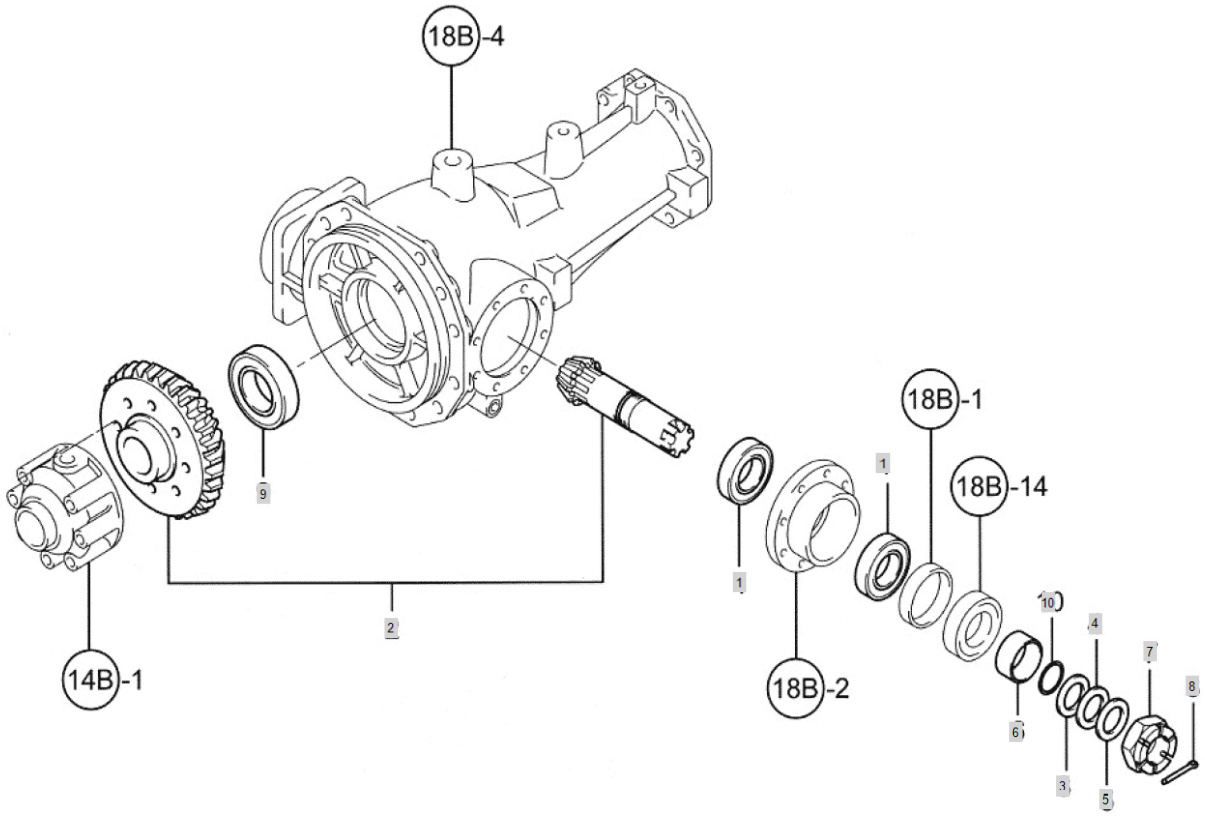

FIG S012 4720	RING GEAR	Year/Month 2020/02

KeyNo.	Part Number	Part Name	Quantity	Other
1	TB19080000A4	BEARING,TAPERROLLER	1	
2	TN12020000A9	RING GEAR ASS'Y	1	
3	TT12030000A4	SHIMA	1	
4	TT12040000A4	SHIMB	1	
5	TT12050000A4	SHIMC	1	
6	TT12060000A4	SEALCOLLAR	1	
7	TT12070000A4	NUT	1	
8	22417-400600	PIN , COTTER (4-60)	1	
9	24101-060124	Bearing, Ball (#6012)	1	
10	24341-000320	O-RING, FIX (Φ32)	1	

FIG S014 4720	DIFFERENTIAL GEAR	Year/Month 2020/02

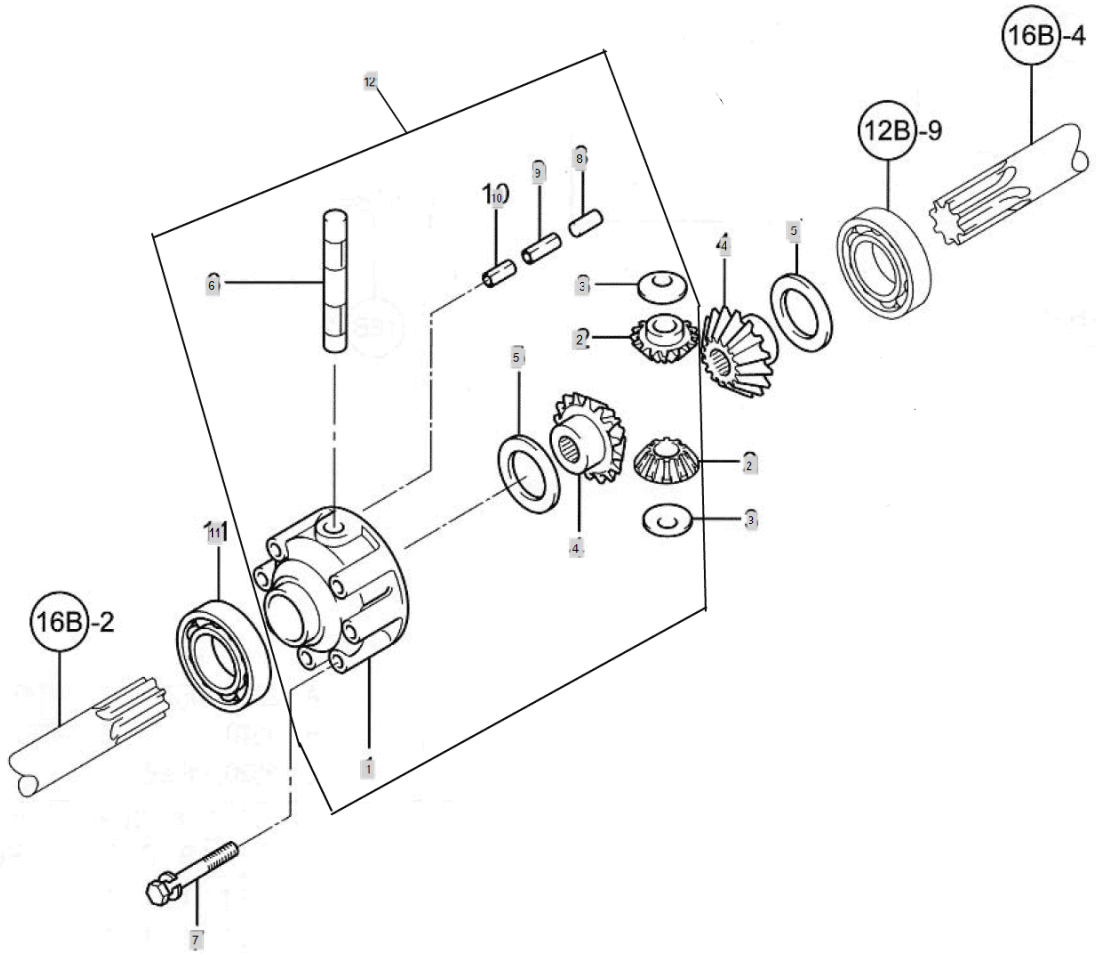

FIG S014 4720	DIFFERENTIAL GEAR	Year/Month 2020/02

KeyNo.	Part Number	Part Name	Quantity	Other
1	TT14010000A3	Case, Differential Driving	1	
2	TD21140000A4	PINION,DIFFERENCIAL	2	
3	TT14030000A4	LINER	2	
4	TD21150000A3	BEVEL GEAR 10T, DIFF.CASE	2	
5	TD21170000A4	LINER, DIFF. CASE	2	
6	TT14060000A4	SHAFT,DIFF.PINION	1	
7	TD21230000A4	BOLT	6	
8	22312-100180	PIN, DOWEL (10-18)	2	
9	22351-035032	PIN, SPRING (3.5-32)	1	
10	22351-060032	PIN, SPRING (6-32)	1	
11	24101-060104	Bearing, Ball (#6010)	1	
12	TT14000000A9	DIFF. CASE ASSY	1	

FIG S015 4720	PROPELLER SHAFT	Year/Month 2020/02

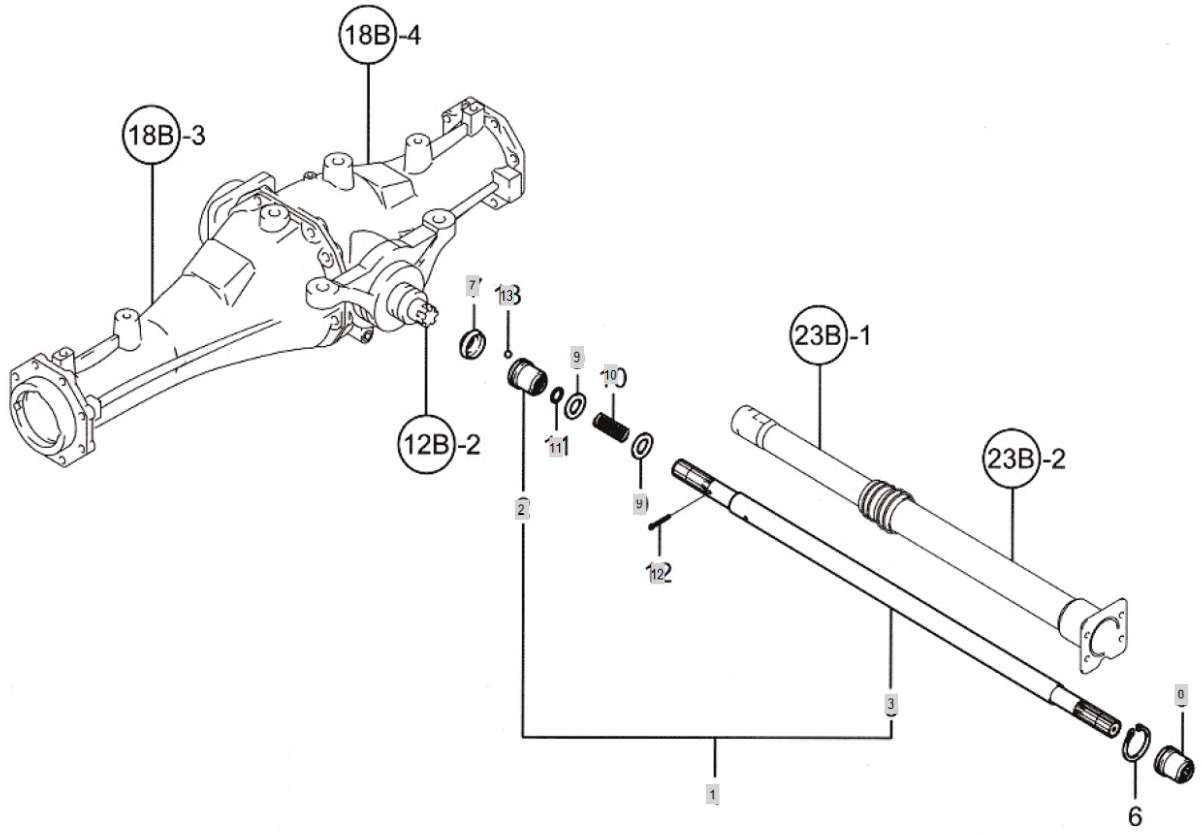

FIG S015 4720	PROPELLER SHAFT	Year/Month 2020/02

KeyNo.	Part Number	Part Name	Quantity	Other
1	TZ1501K000A9	PROPELLERSHAFT	1	
2	TT15020000A4	COUPLINGB.F	1	
3	TX15030000E3	SHAFT,PROPELLER	1	
7	TT15070000A4	BOOTS, DRIVE SHAFT	2	
8	TT15080000A4	COUPLINGREAR	1	
9	TD21270000A4	O-RING, FIX (Φ28)	3	
10	TT15100000A4	SPRING	1	
11	TD21290000A4	SEAL,SPINESHAFT	1	
12	22417-300350	PIN , COTTER (3-35)	1	
13	24190-110001	Ball, Steel (11/32)	12	

FIG S016 4720	FRONT SHAFT	Year/Month 2020/02

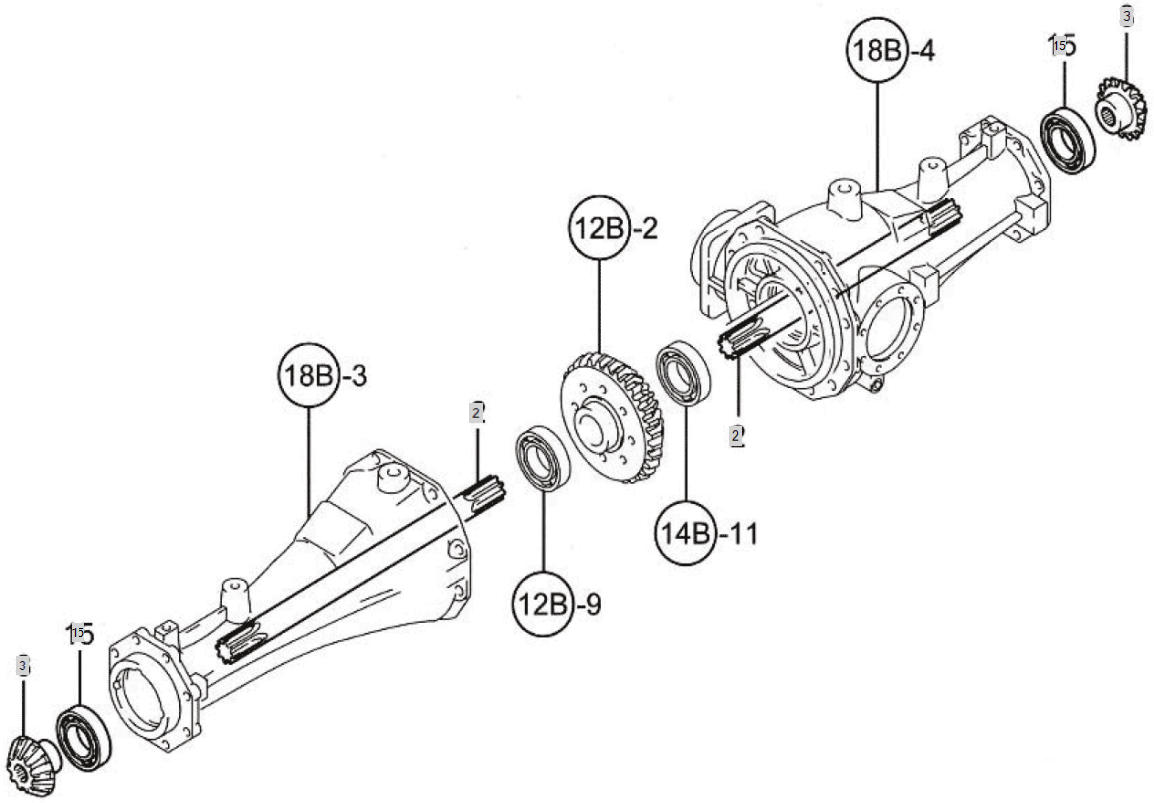

FIG S016 4720	FRONT SHAFT	Year/Month 2020/02

KeyNo.	Part Number	Part Name	Quantity	Other
2	TN16020000A3	SHAFTFRONT	2	
3	TT16030000A3	PINION	2	
15	24101-062084	Bearing, Ball (#6208)	2	

FIG S018 4720	CASE, FRONT AXLE	Year/Month 2020/02

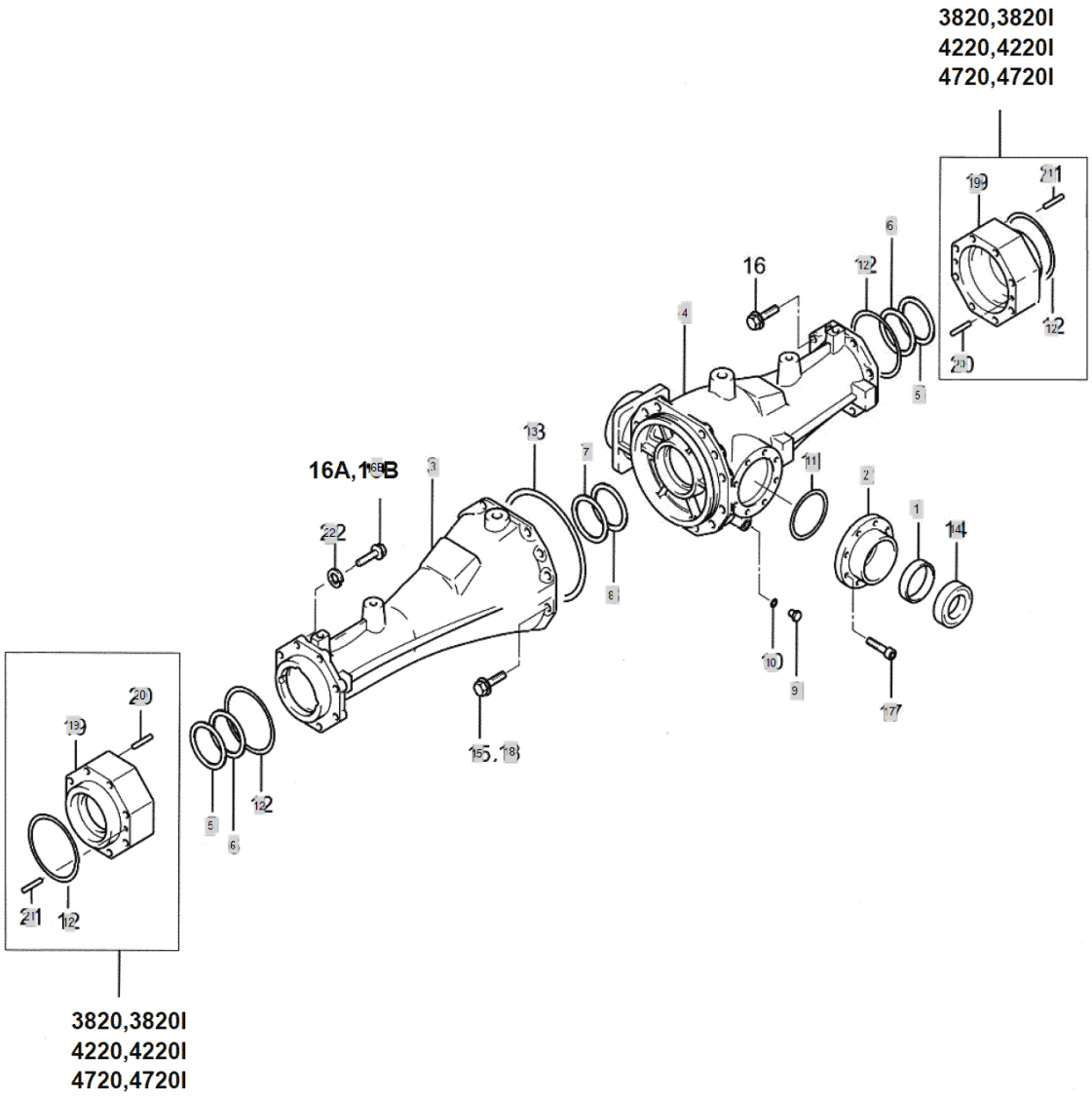

FIG S018 4720	CASE, FRONT AXLE	Year/Month 2020/02

KeyNo.	Part Number	Part Name	Quantity	Other
1	TT18010000A4	SPACE62	1	
2	TT18020000A3	RETAINERBEARING	1	
3	NT18200000C0	FRONT CASE(L)	1	
4	NT18210000C0	FRONT CASE(R)	1	
5	TT18050000A4	SHIMA	4	
6	TT18060000A4	SHIMB	4	
7	TT18070000A4	SHIMA	2	
8	TT18080000A4	SHIMB	2	
9	23491-140002	PLUG, DRAIN -> 23490-140002	1	
10	24311-000160	O-RING, DYNAMIC (Φ16)	1	
11	24321-000700	O-RING1AG-70	1	
12	24321-001000	O-RING(G-100)	2	
13	24321-001700	O-RINGG-170	1	
14	24421-456209	OILSEAL(TCTYPE)	1	
15	26013-120302	HEX BOLT W/WASHER	10	
16B	26013-120902	BOLT	8	
17	26450-080202	HEXAGONSOCKETCAPBOLT	8	
18	26013-120502	BOLT12X50	2	
19	NT18180000B2	F/A SPACER	2	
20	22312-080160	PIN, DOWEL (8-16)	4	
21	22312-080160	PIN, DOWEL (8-16)	4	
22	TT08220000A4	LOCKSPRINGWASHER	8	

FIG S019 4720	GEAR CASE FRONT AXLE	Year/Month 2020/02

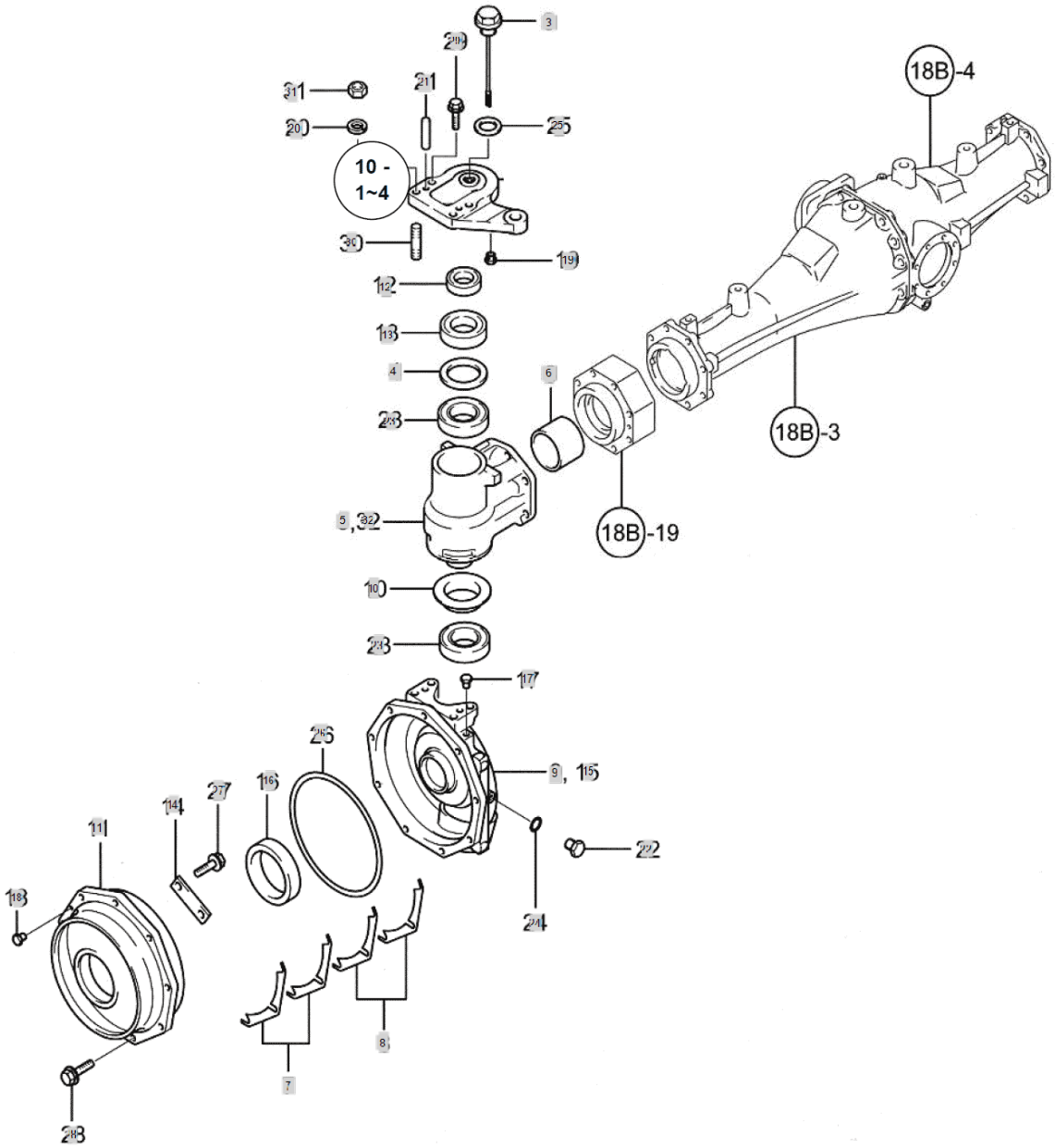

FIG S019 4720	GEAR CASE FRONT AXLE	Year/Month 2020/02

KeyNo.	Part Number	Part Name	Quantity	Other
3	TT19030000A3	PLUG	2	
4	TT19040000A4	SPACER	2	
5	NT19050000B1	FRONT GEAR CASE(L)	1	
6	TT19060000A4	SPACER	2	
7	TT19070000A4	SHIMA	12	
8	TT19080000A4	SHIMB	12	
9	TT19090000A1	HOUSING (LH),FRONT GEAR	1	
10	TT19100000A3	SEAL55X85	2	
11	TT19110000A3	CASE,FRONTBEARING	2	
12	TT19120000A3	SISLEEVE	2	
13	TT19130000A3	OIL SEAL	2	
14	TT19140000A4	SUPPORTBEARING	4	
15	TT19150000A1	HOUSING (RH), FRONT GEAR	1	
16	TT19160000A4	OILSEAL	2	
17	TT19170000A4	PLUGRUBBER	2	
18	TB26060000A4	PLUGRUBBER	6	
19	TB26060000A4	PLUGRUBBER	2	
20	22217-120000	WASHER, SPRING (Φ 12)	4	
21	22312-100320	PIN, DOWEL (10-32)	4	
22	23491-140002	PLUG, DRAIN -> 23490-140002	2	
23	24101-062094	BALL BEARING (#6209)	4	
24	24311-000160	O-RING, DYNAMIC (Φ16)	2	
25	24311-000220	O-RING, DYNAMIC (Φ22)	2	
26	24321-002200	O-RING	2	
27	26013-080252	Bolt, Hexa (8-25)	8	
28	26013-100252	SCREW,CAPTIVEWASHERCAP	18	
29	26013-120402	Bolt, Hexa (12-40)	4	
30	26216-120352	STEELBOLT	4	
31	26716-120002	BOLT,CYLINDER HEAD(B)	4	
32	NT19330000B1	FRONT GEAR CASE(R)	1	

FIG S021 4720	FRONT 2ND SHAFT	Year/Month 2020/02

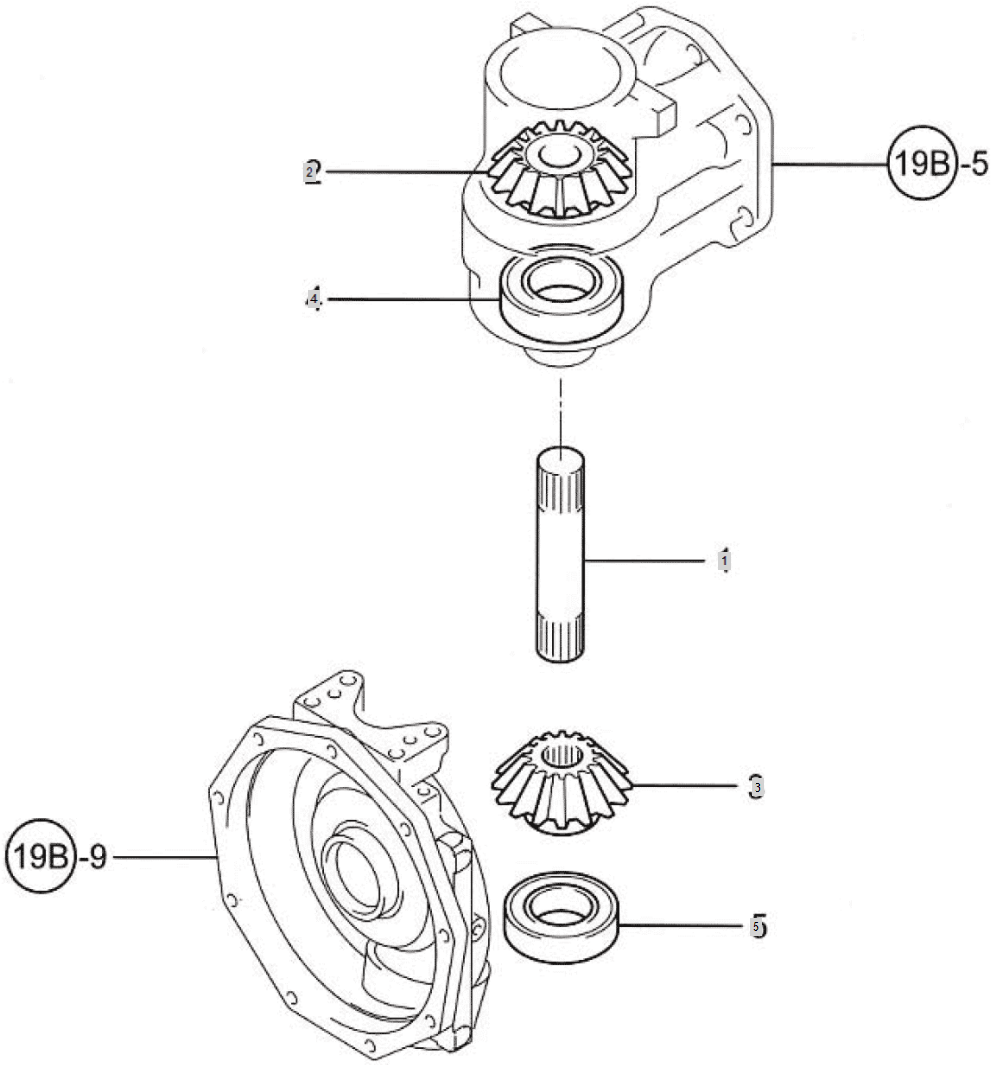

FIG S021 4720	FRONT 2ND SHAFT	Year/Month 2020/02

KeyNo.	Part Number	Part Name	Quantity	Other
1	TT21010000A4	SHAFTFRONT	2	
2	TT21020000A3	GEAR 19T	2	
3	TT21030000A3	PINIONFINAL	2	
4	TT21040000A4	BEARING	2	
5	24101-060094	Bearing, Ball (#6009)	2	

FIG S022 4720	FRONT SPINDLE	Year/Month 2020/02

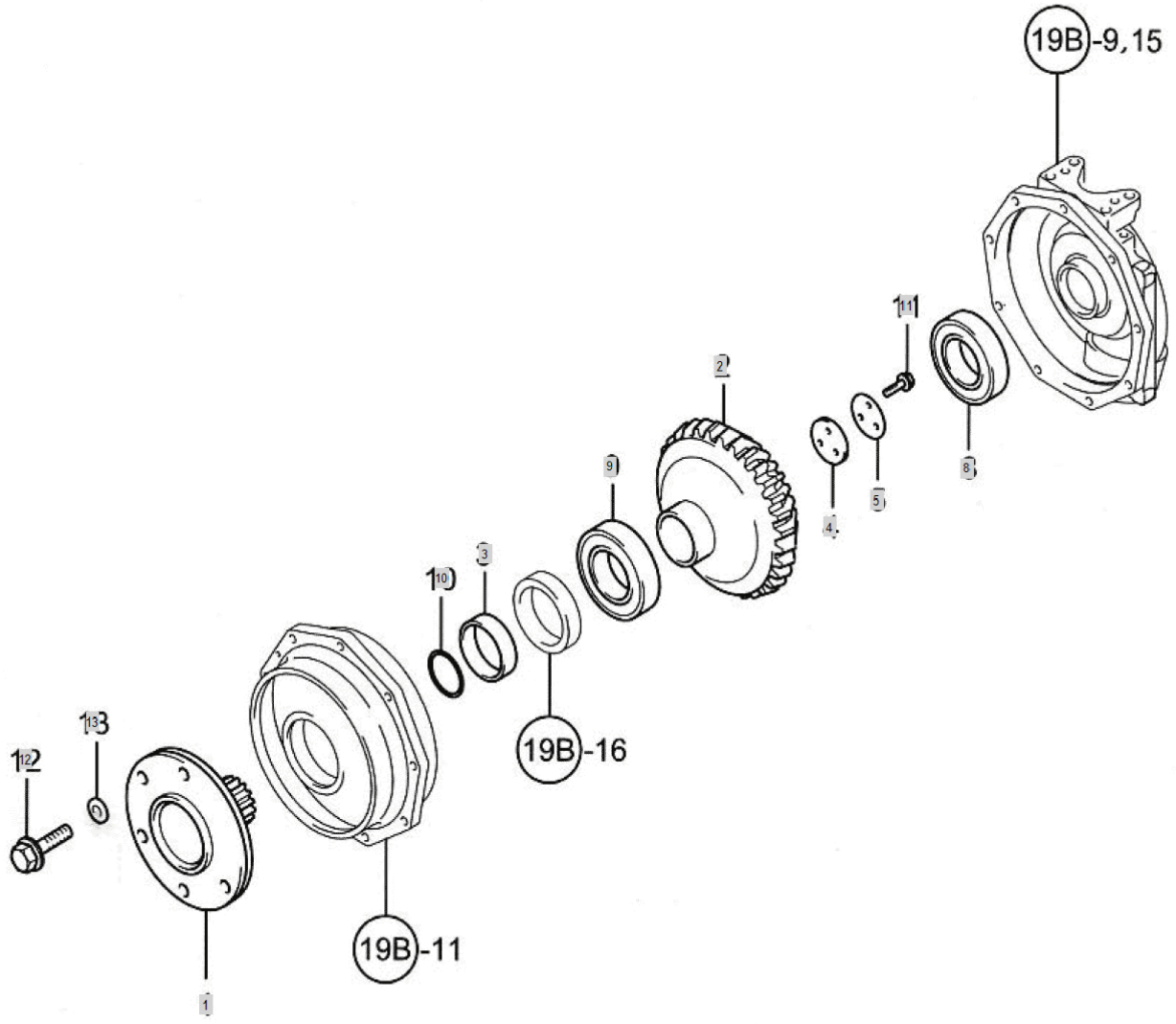

FIG S022 4720	FRONT SPINDLE	Year/Month 2020/02

KeyNo.	Part Number	Part Name	Quantity	Other
1	TT22010000A3	FRONTSPINDLE	2	
2	TT22020000A3	GEAR, FRONT FINAL(44T)	2	
3	TT22030000A4	SEAL COLLAR	2	
4	TT22040000A4	WASHER	2	
5	TT22050000A4	WASHER	2	
8	24101-060144	BALL BEARING (#6014)	2	
9	24101-062134	BEARING, BALL (#6213)	2	
10	24325-000650	O-RINGG65	2	
11	26116-100252	BOLT7T(100X25)	6	
12	TD23120000A4	BOLT	12	
13	TB29430000A4	WASHER	12	

FIG S023 4720	COVER SHAFT	Year/Month 2020/02

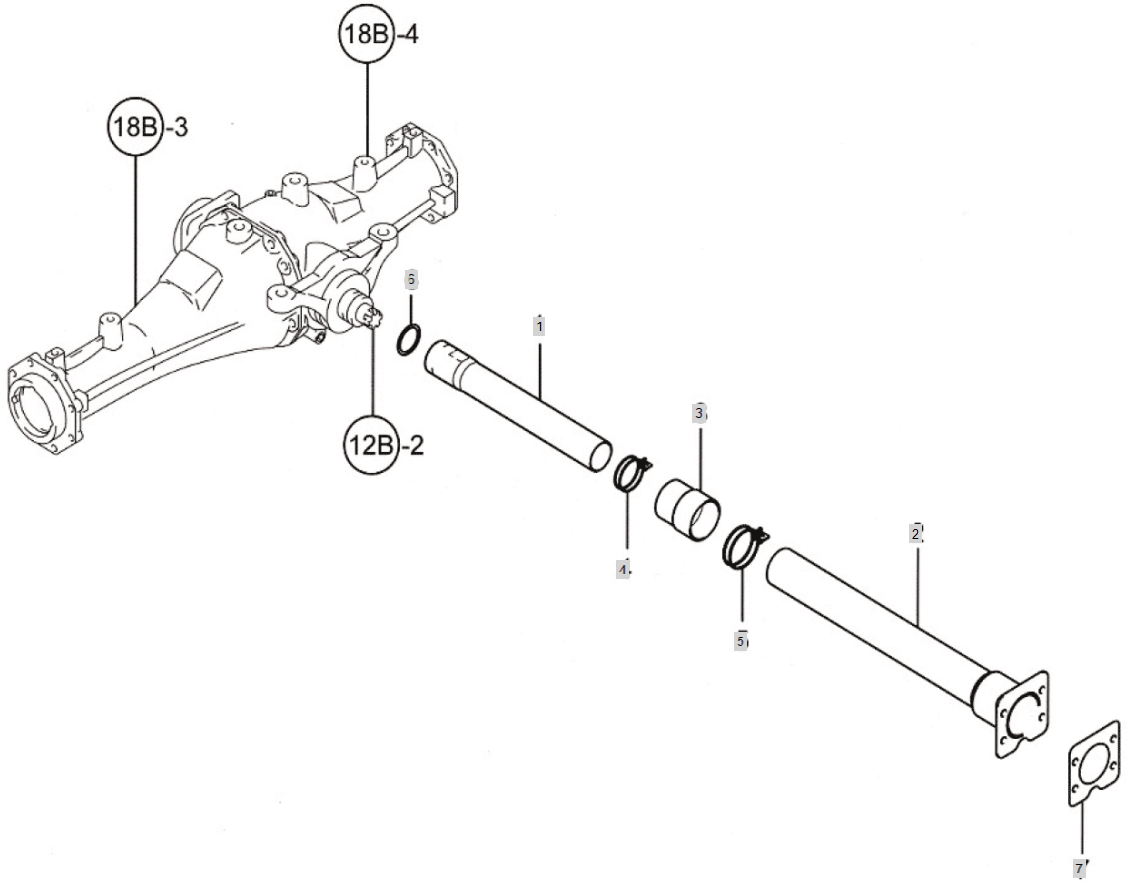

FIG S023 4720	COVER SHAFT	Year/Month 2020/02

KeyNo.	Part Number	Part Name	Quantity	Other
1	TX23010000A3	FRONTSHAFTCOVER	1	
2	TN23020000A3	COVER(REAR),SHAFT	1	
3	TN23030000A4	BOOT,COVER	1	
4	23010-060000	HOSEBAND	1	
5	23010-065000	HOSEBAND65	1	
6	24311-000450	O-RING, DYNAMIC (Φ45)	1	
7	TN23070000A4	PACKINGCOVER	1	

FIG S032 4720	PS CYLINDER	Year/Month 2020/02

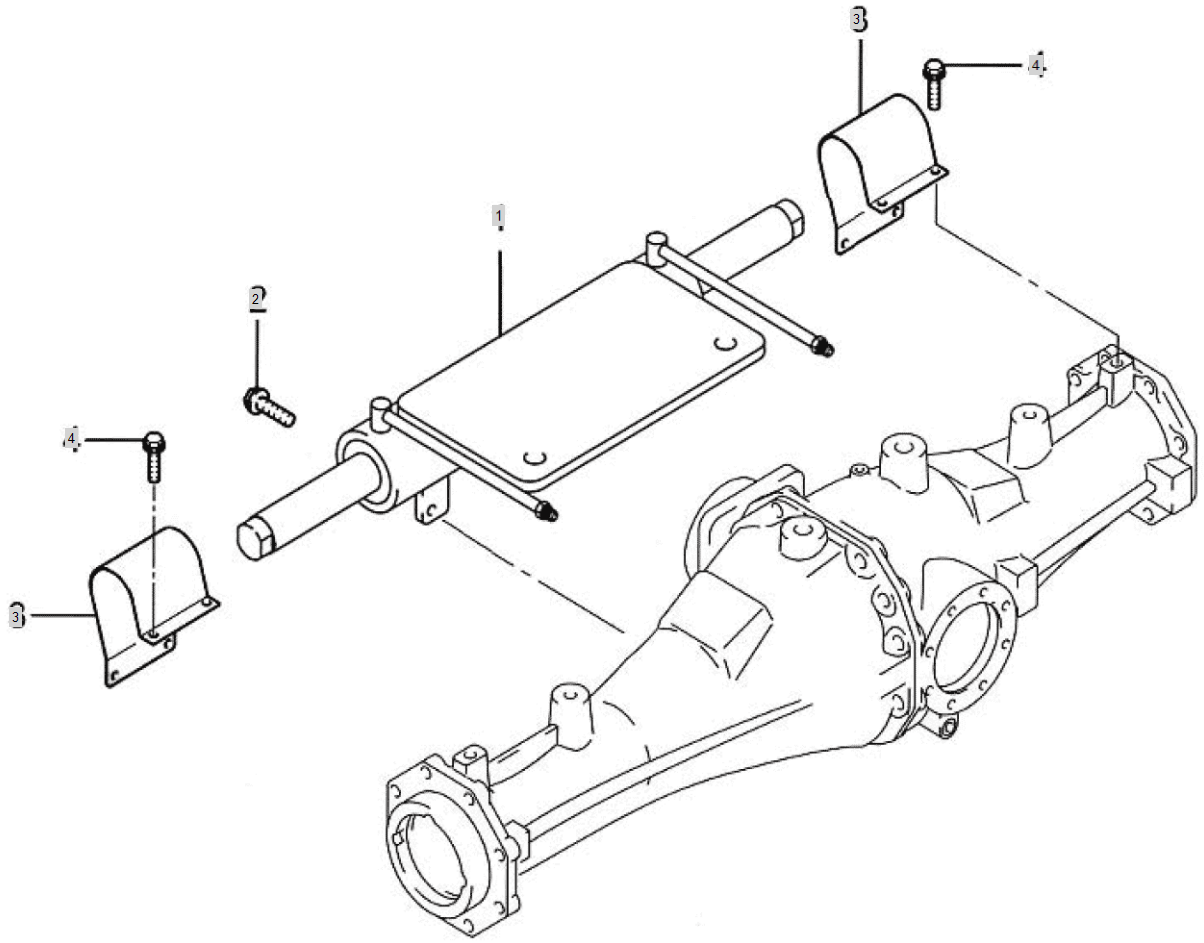

FIG S032 4720	PS CYLINDER	Year/Month 2020/02

KeyNo.	Part Number	Part Name	Quantity	Other
1	NT32360000C3	PST CYLINDER ASSY	1	
2	26106-120302	HEXFLANGEBOLT	4	
3	NT32350000A3	CYLINDERCOVER	2	
4	26106-080122	Bolt, Hexa (8-12)	8	

FIG S033 4720	PS VALVE	Year/Month 2020/02

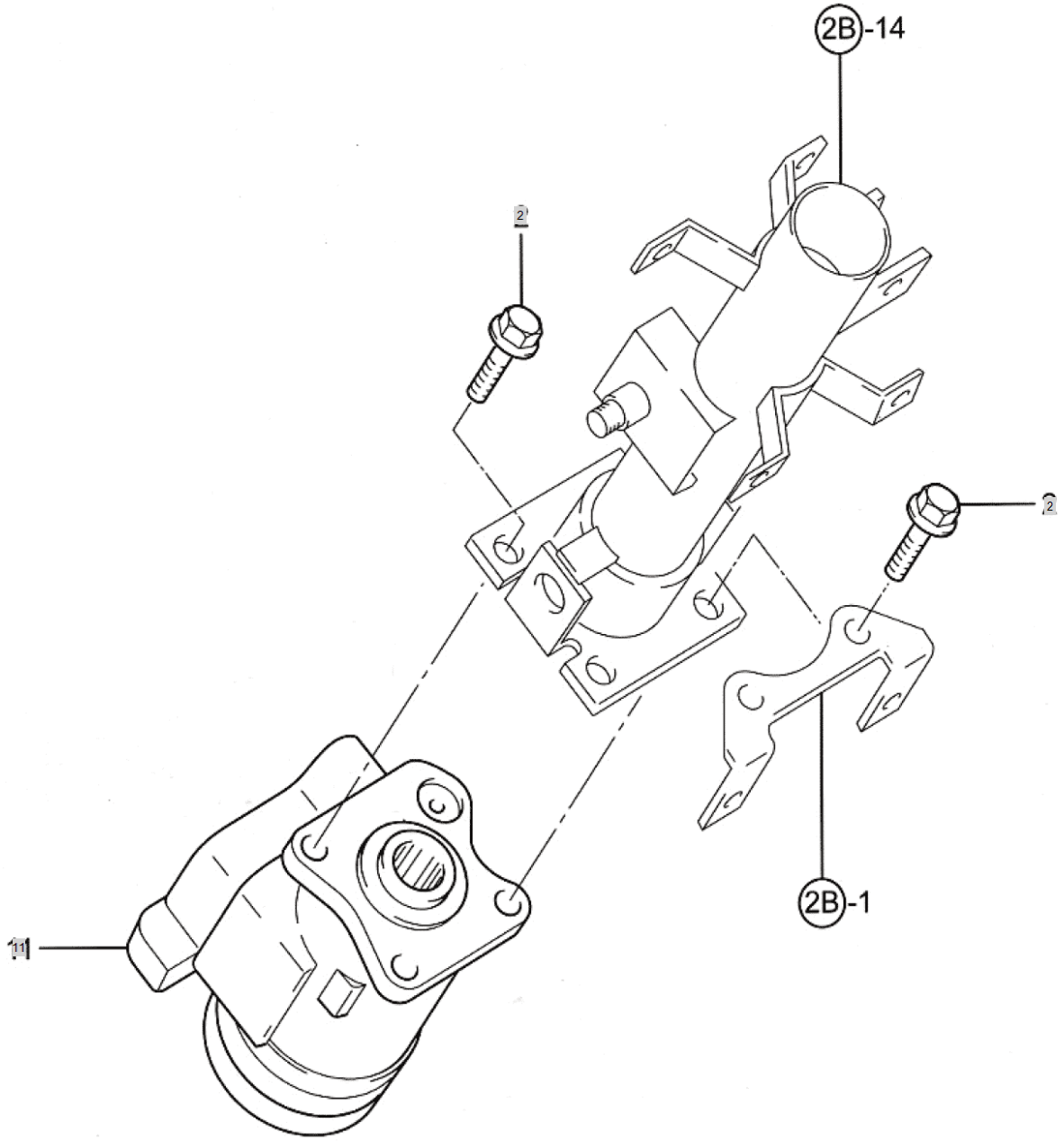

FIG S033 4720	PS VALVE	Year/Month 2020/02

KeyNo.	Part Number	Part Name	Quantity	Other
2	26136-100252	SCREW, HEX FLANGE HEAD CAP	3	
11	NT33010000A3	P.S.TVALVE	1	

FIG S034 4720	PS PIPE	Year/Month 2020/02

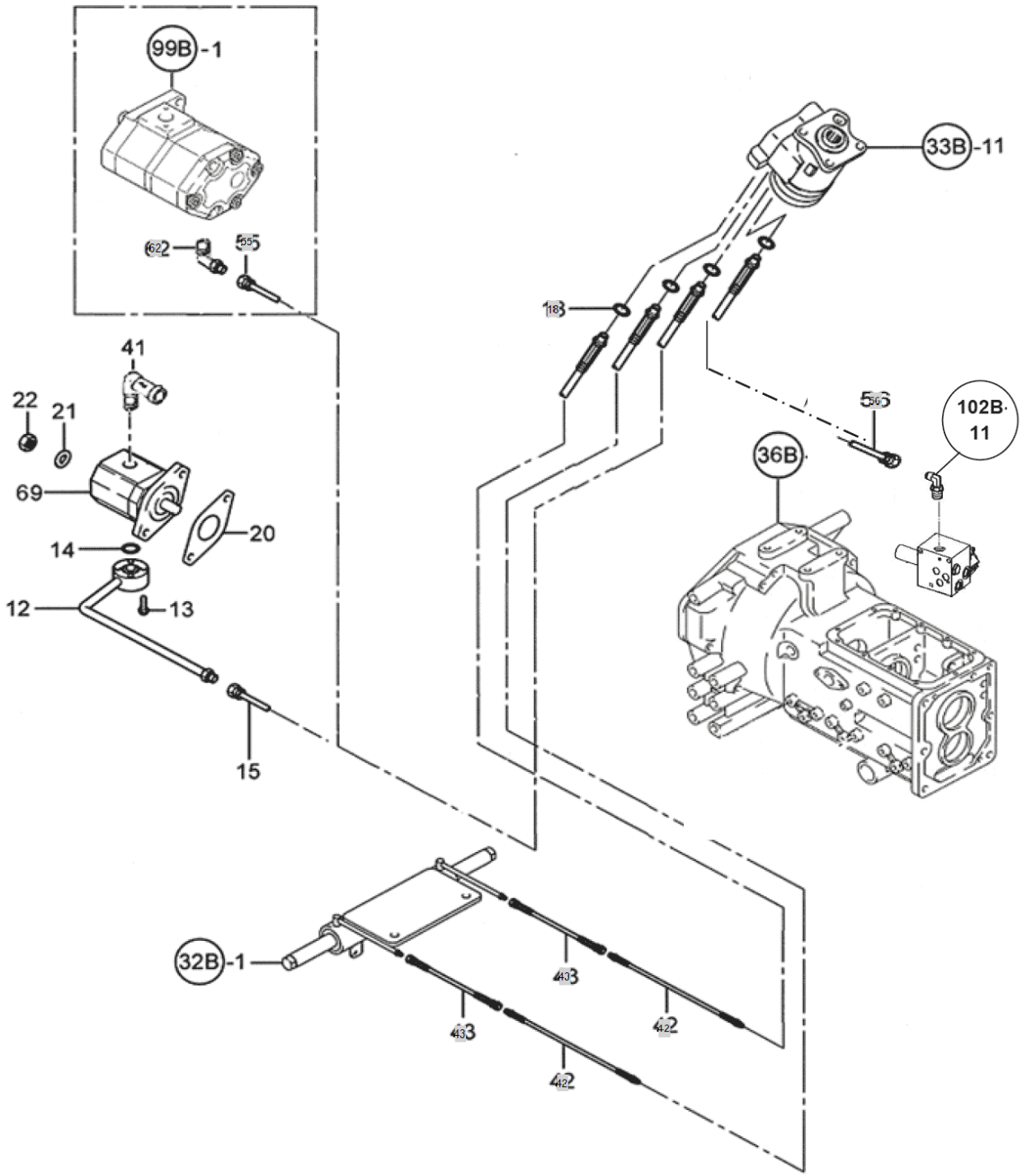

FIG S034 4720	PS PIPE	Year/Month 2020/02

KeyNo.	Part Number	Part Name	Quantity	Other
18	24311-000090	O-RING, DYNAMIC (Φ9)	4	
42	NT34420000C3	HOSE,STEERING	2	
43	NT34430000A3	HOSE	2	
51	NT34510000A4	ELBOWPF1/4	1	
55	NT34550000B3	HIGHPRESSUREHOSE,P.S.T	1	
56	NT34560000A3		1	
62	NT34620000A4	ELBOW	1	

FIG S036 4720	CLUTCH HOUSING	Year/Month 2020/02

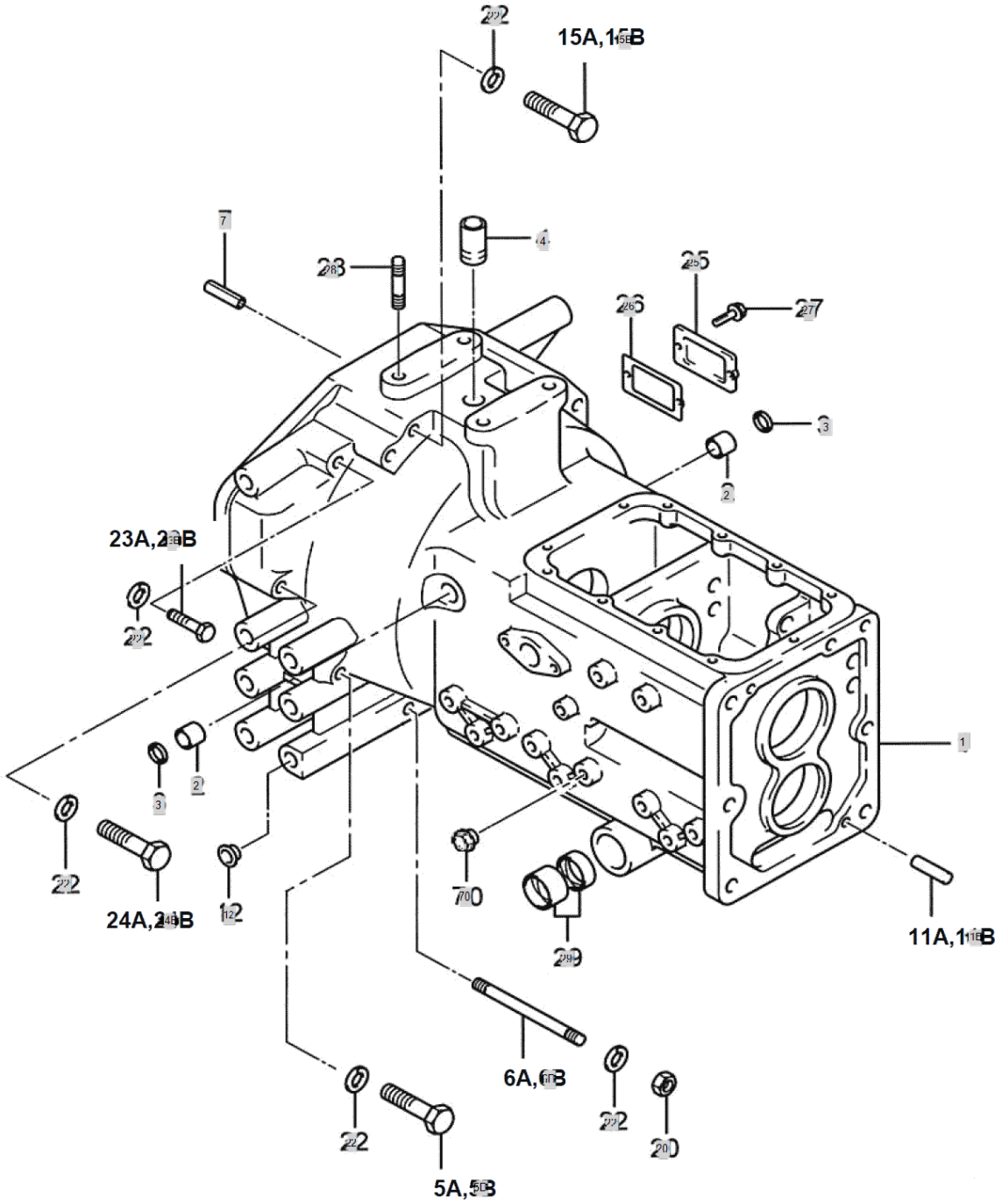

FIG S036 4720	CLUTCH HOUSING	Year/Month 2020/02

KeyNo.	Part Number	Part Name	Quantity	Other
1	NT36010000E0	Clutch housing	1	
2	TT36020000A4	BUSH20X26X22	2	
3	TT36030000A4	SEAL20X26X4	2	
4	TT36130000B4	PIPEAIR	1	
5B	TZ3605H000A3	BOLT	4	
6B	TZ3606Y000A4	STUD	2	
7	22351-080018	PIN, SPRING (8-18)	2	
11B	NT41430000A4	PARALLEL PIN	2	
12	TTD4300000A4	PLUG15	8	
15B	TZ3605Y000A3	BOLT	2	
20	26716-120002	BOLT,CYLINDER HEAD(B)	2	
22	22217-120000	WASHER, SPRING (Φ 12)	10	
23B	26116-120922	BOLT	1	
24B	TZ3622Y000A3	BOLT.M12*110	1	
25	TZ36250000A4	COVER,CLUTCHADJUST	1	
26	TZ36260000A4	PACKING	1	
27	26013-080202	Bolt, Hexa (8-20)	2	
28	26216-120302	STUDBOLT	4	
29	TB26240000A4	BUSH	4	
70	NT36700000A4	PLUG	1	

FIG S038-1 4720	CLUTCH ASS'Y DUAL STAGE CLUTCH	Year/Month 2020/02

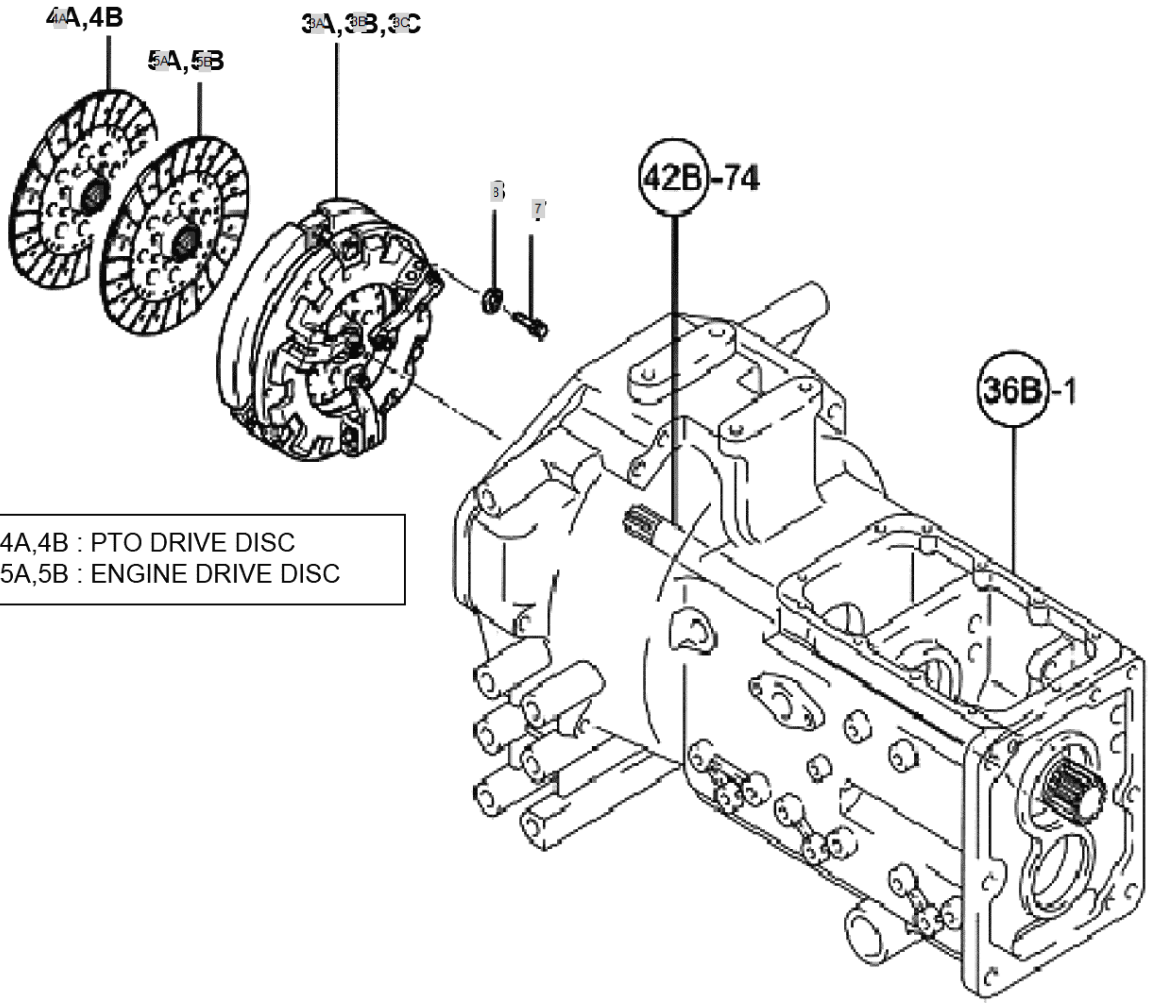

#4A,4B : PTO DRIVE DISC
#5A,5B : ENGINE DRIVE DISC

FIG S038-1 4720	CLUTCH ASS'Y DUAL STAGE CLUTCH	Year/Month 2020/02

KeyNo.	Part Number	Part Name	Quantity	Other
3A	TZ38010000A1	CLUTCHASS'Y	1	
3B	TZ38010000-R	CLUTCH ASS'Y - REBULIT	1	
3C	TZ38010000CB	CERAMIC BUTTON REMAN CL.(Pres Plate w/ drve Disk)	1	
4A	TZ38010011A3		1	
4B	TZ38010011-R	CLUTCH DISC ASS'Y (PTO) - REBUILT	1	
5A	TZ38010021A3	TRACTIONCLUTCHDISK	1	
5B	TZ38010021-R	CLUTCH DISC ASS'Y (DRIVE) - REBUILT	1	
7	26116-080852	HEX.BOLT	6	
8	22217-080000	WASHER, SPRING (Φ 08)	6	

FIG S040 4720	CLUTCH RELEASE	Year/Month 2020/02

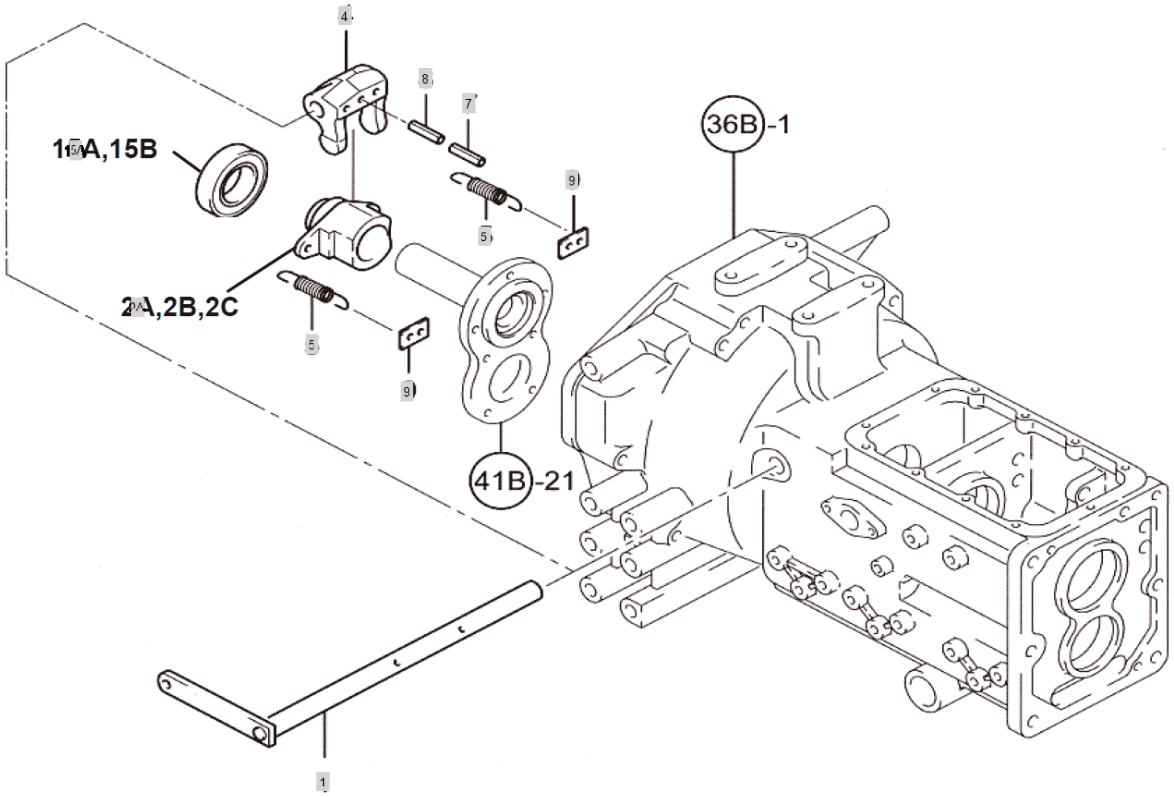

FIG S040 4720	CLUTCH RELEASE	Year/Month 2020/02

KeyNo.	Part Number	Part Name	Quantity	Other
1	NT40010000A3	RELEASESHAFT(MAINCLUTCH)	1	
2A	TZ40020000B3	SLEEVE,BEARING	1	
4	TZ40040000E3	YOKE,CLUTCH SHIFT	1	
5	TT40050000A4	SPRINGRETURN	2	
7	22351-050040	PIN, SPRING (5-04)	2	
8	22351-080040	PIN, SPRING (8-40)	2	
9	TN40090000A4	BRACKETSPRING	2	
15A	NT40130000A4	RELEASE,BEARINGASSY	1	

FIG S041 4720	TRANSMISSION CASE SHIFT	Year/Month 2020/02

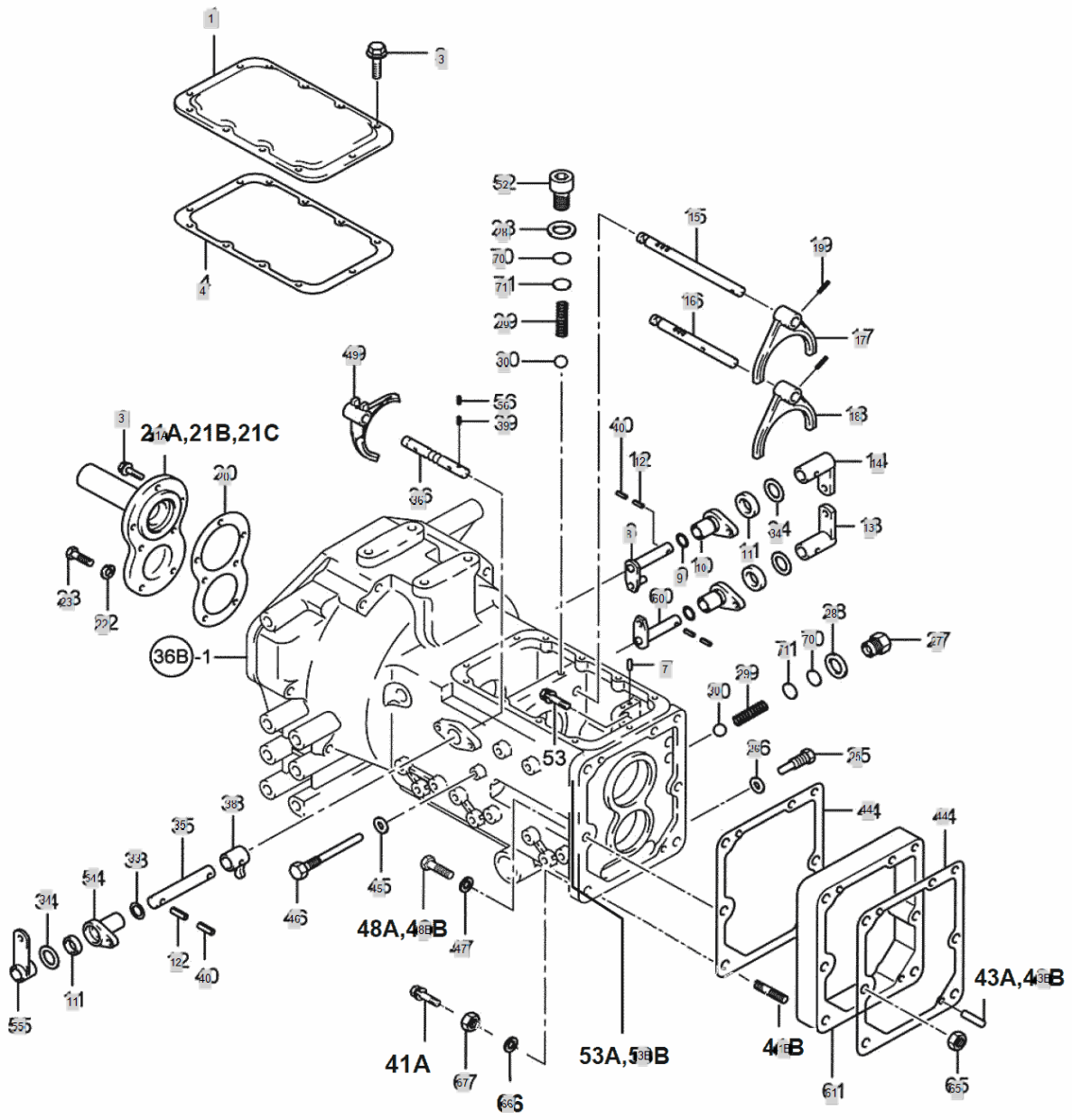

FIG S041 4720	TRANSMISSION CASE SHIFT	Year/Month 2020/02

KeyNo.	Part Number	Part Name	Quantity	Other
1	NT41010000B3	UPPERCOVER,T/M	1	
3	26013-080252	Bolt, Hexa (8-25)	17	
4	NT41040000B3	GASKET	1	
7	TN41070000A4	PIN	1	
8	NT41080000A4	LEVER3-4	1	
9	24311-000210	O-RING, DYNAMIC (Φ21)	3	
10	TN4110000A4	MAIN SHIFT HOLDER	2	
11	24421-173007	Seal, Oil (#17-30-07)	3	
12	22351-080028	PIN, SPRING (8-28)	2	
13	NT41130000B4	ARM(3-4), MAIN SHIFT	1	
14	NT41140000A4	ARM(1-2),MAINSHIFT	1	
15	NT41150000A3	FORKSHAFT[3-4],MAINSHIFT	1	
16	NT41160000A3	FORKSHAFT(1-2),MAINAHIFT	1	
17	TN41170000B3	FORK1ST~2ND,MAINSHIFT	1	
18	TN41180000B3	FORK3-4MAINSHAFT	1	
19	22351-060030	PIN, SPRING (6-30)	2	
20	TZ41200000A3	PACKING	1	
21A	TZ41210000A2	CASE,OILSEAL	1	
22	22217-080000	WASHER, SPRING (Φ 08)	5	
23	26116-080222	BOLT7T(8X22)	5	
25	TN41250000A4	FIXINGBOLT	1	
26	23414-100000	PLAIN WASHER (D10)	1	
27	NT41270000A4	CAPBOLT	1	
28	23414-160000	WASHER,SEALING	2	
29	TT42020000A4	SPRING	3	
30	24190-100001	Ball, Steel (5/16)	3	
33	24311-000110	O-RING, DYNAMIC (Φ11)	1	
34	TT65120000A4	COLLARB	3	
35	NT41350000A4	SHAFTSHUTTLECHANGE	1	
36	TN41360000A3	SHAFTSH.FORK	1	
38	NT41380000A4	LEVERSHUTTLESHAFT	1	
39	22351-060025	PIN, SPRING (6-25)	2	
40	22351-050028	PIN, SPRING (5-02)	2	
41B	26013-120402	Bolt, Hexa (12-40)	1	
43B	NT41430000A4	PARALLEL PIN	4	
44	TZ41440000A4	PACKING	2	
45	23414-080000	WASHER, PLAIN (Φ8)	1	
46	NT41460000A4	BOLT	1	
47	22217-140000	WASHER, SPRING (Φ 14)	5	
48B	26216-140952	STUD BOLT	5	
49	TN41490000B3	FORK, SHUTTLE SHIFT	1	
52	23871-010000	PLUG	1	
53B	26013-121102	BOLT12X110	1	
54	NT41540000A4	HOLDER,SHUTTLESHIFT	1	
55	NT41550000A4	LINKC,SHUTTLE	2	

FIG S041 4720	TRANSMISSION CASE SHIFT	Year/Month 2020/02

KeyNo.	Part Number	Part Name	Quantity	Other
56	22351-080028	PIN, SPRING (8-28)	1	
60	NT41600000A4	LEVER[1ST-2ND],MAINSHIFT	1	
61	NT36200000B3	SPACER,MISSIONCASE	1	
65	26716-140002	NUT	5	
66	22217-120000	WASHER, SPRING (Φ 12)	1	
67	26716-120002	BOLT,CYLINDER HEAD(B)	1	
70	TN41540000A4	SHIM,MAINSHAFT	2	
71	TN41550000A4	SHIM,MAIN(1.2T)	4	

FIG S042 4720	MAIN REVERSER GEAR	Year/Month 2020/02

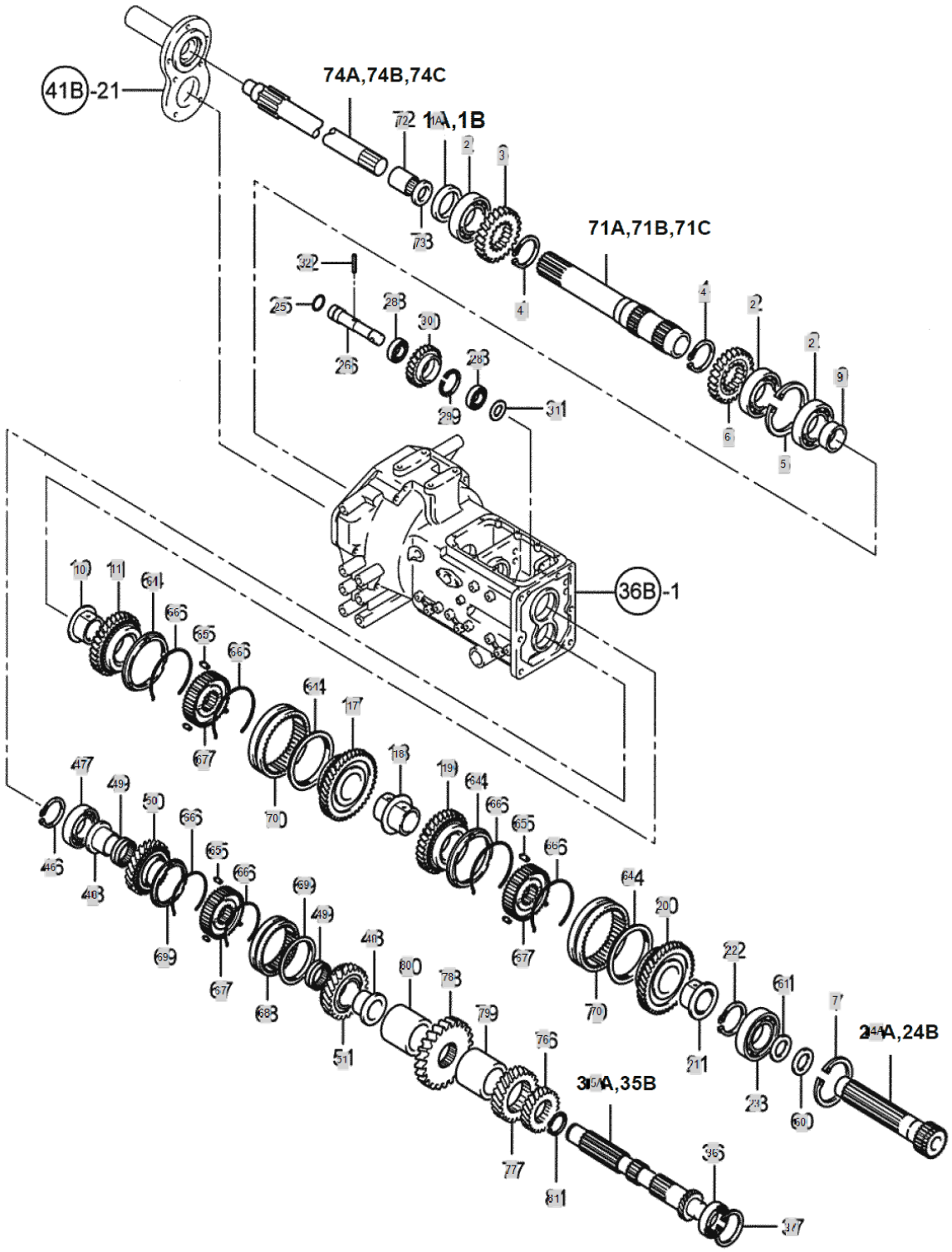

FIG S042 4720	MAIN REVERSER GEAR	Year/Month 2020/02

KeyNo.	Part Number	Part Name	Quantity	Other
1A	24423-385508	OIL SEAL (T38X55X08)	1	
2	24101-062084	Bearing, Ball (#6208)	3	
3	TN42030000A3	GEARREVERSER26T	1	
4	22242-000450	SNAP RING, SHAFT (Φ 45)	2	
5	22252-000800	RING, CIRCLIP (Φ 80)	2	
6	TN42060000A3	GEAR,FORWARD	1	
7	22252-000800	RING, CIRCLIP (Φ 80)	1	
9	TN42090000B4	BUSH	1	
10	TN42100000B4	BUSHA,GUIDE	1	
11	TN42950000A3	4SHIFT_GEAR(32T)	1	
17	TN42960000A3	3RDGEAR37T	1	
18	TN42180000B4	HUSHB,GUIDE	1	
19	TN42970000A3	GEAR 41T	1	
20	TN42980000A3	GEAR 1ST.43T	1	
21	TN42210000B4	BUSHC	1	
22	22292-000350	RING, CIRCLIP (Φ 35)	1	
23	24111-063074	BEARING	1	
24A	NT42240000B3	GUIDESHAFT,MAIMSHIFT	1	
25	24311-000200	O-RING, DYNAMIC (Φ20)	1	
26	TN42260000A3	IDLE SHAFT, REVERSE	1	
28	24101-060044	Bearing, Ball (#6004)	2	
29	22252-000420	RING, CIRCLIP (Φ 42)	1	
30	TN42300000A3	REVERSERGEARIDLE	1	
31	TN42310000B4	COLLAR	1	
32	22351-060030	PIN, SPRING (6-30)	1	
35A	NT42350000A2	COUNTERSHAFTA'SSY	1	
36	24111-063064	BALLBEARING6306	1	
37	22252-000720	RING, CIRCLIP (Φ 72)	1	
46	22242-000300	SNAP RING, SHAFT (Φ 30)	1	
47	24101-063064	Bearing, Ball (#6306)	1	
48	TN42480000A4	BUSH D, GUIDE	2	
49	24161-404527	NEEDLEBEARING	2	
50	TN42500000E3	REVERSE GEAR 30T	1	
51	TN42510000E3	GEAR, FORWARD 32T	1	
60	TT18050000A4	SHIMA	1	
61	TT18060000A4	SHIMB	1	
64	TN42640000A2	RING, SYNCHRO.	4	
65	TN42650000A9	PIECE	9	
66	TN42660000A9	SPRING	6	
67	TN42670000A3	HUB	3	
68	TN42680000A9	SLEEVE	1	
69	TN42690000A9	SYNCHRO.RINGASS'Y	2	
70	TN42700000A2	SLEEVE	2	
71A	NT42710000B3	MAINSHAFT,OUTER	1	
72	24550-020120	DRYBUSH	1	

FIG S042 4720	MAIN REVERSER GEAR	Year/Month 2020/02

KeyNo.	Part Number	Part Name	Quantity	Other
73	24413-203007	Seal, Oil (#20-30-07)	1	
74A	TZ4274Y000A3	MAINSHAFT,INNER	1	
76	NT42760000A3	GEAR2ND,COUNTER	1	
77	NT42770000A3	GEAR3RD,COUNTER	1	
78	NT42780000A3	GEAR4TH,COUNTER	1	
79	NT42790000A4	SPACER,FRONT	1	
80	NT42800000A4	SPACER,REAR	1	
81	22242-000350	SNAP RING, SHAFT (Φ 35)	1	

FIG S043 4720	FRONT DRIVE & RANGE SHIFT GEAR	Year/Month 2020/02

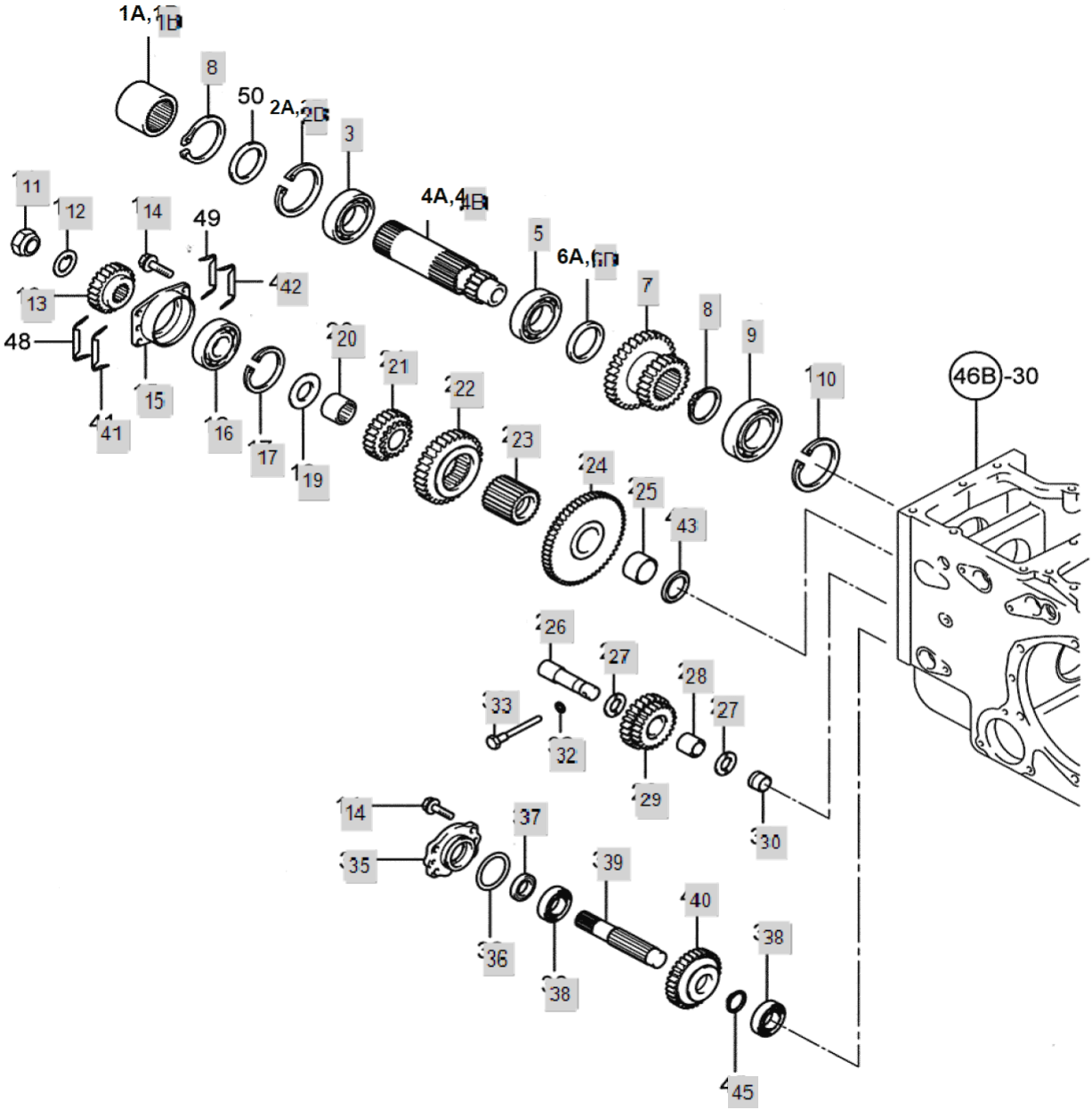

FIG S043 4720	FRONT DRIVE & RANGE SHIFT GEAR	Year/Month 2020/02

KeyNo.	Part Number	Part Name	Quantity	Other
1B	TZ43010000A3	COLLAR,COUPLING	1	
2B	22252-000850	RING, CIRCLIP (Φ 85)	1	
3	24101-062094	BALL BEARING (#6209)	1	
4B	TN43040000A3	GEAR16RANGESHIFT	1	
5	24101-060104	Bearing, Ball (#6010)	1	
6B	TN43060000A4	COLLAR	1	
7	TN43070000A3	GEAR2ND3RDRANGESHIFT	1	
8	22242-000500	SNAP RING, SHAFT (Φ50)	2	
9	24101-063074	Bearing, Ball (#6307)	1	
10	22252-000800	RING, CIRCLIP (Φ 80)	1	
11	TN43110000A4	LOCKNUT	1	
12	TT57020000A4	WASHER	1	
13	TN43130000A3	GEAR25FRONTDRIVE	1	
14	26013-080202	Bolt, Hexa (8-20)	8	
15	TN43150000A3	CASEBEARING	1	
16	24101-063064	Bearing, Ball (#6306)	1	
17	22252-000720	RING, CIRCLIP (Φ 72)	1	
19	TN43190000A4	THRUSTWASHER	1	
20	24161-323827	Bearing, Neddle (#32-38-27)	1	
21	TA00031460A	GEAR16,RANGE SHIFT 3RD	1	
22	TN43220000B3	GEAR 30T,RANGE SHIFT 2ND	1	
23	TN43230000B3	CALLAR	1	
24	TN43240000B3	GEAR 56T,SUB SHIFT 1ST	1	
25	TT57080000A4		1	
26	TN43260000A4	SHAFT, FRONT DRIVE IDLE	1	
27	TN43270000A4	THRUSTWASHER	2	
28	24161-202825	NEEDLE BEARIN (#20-28-25)	1	
29	TN43290000A3	GEARFRONTDRUVEIDLE	1	
30	TN43300000A4	COLLAR	1	
32	23414-100000	PLAIN WASHER (D10)	1	
33	TN43330000A4	BOLT	1	
35	TN43350000A3	CASEOILSEAL	1	
36	TN43360000A4	O-RING	1	
37	24421-254008	Seal, Oil (#25-40-08)	1	
38	24101-062054	Bearing, Ball (#6205)	2	
39	TN43390000A3	SHAFTFRONTDRIVELINE	1	
40	TN43400000A3	GEARFRONTDRIVE	1	
41	TN43410000A4	SHIM	1	
42	TN43420000A4	SHIM	1	
43	TT57100000B4	WASHER,THRUST	1	
45	TN43450000A4	COLLAR	1	

FIG S044 4720	FRONT DRIVE RANGE SHIFT	Year/Month 2020/02

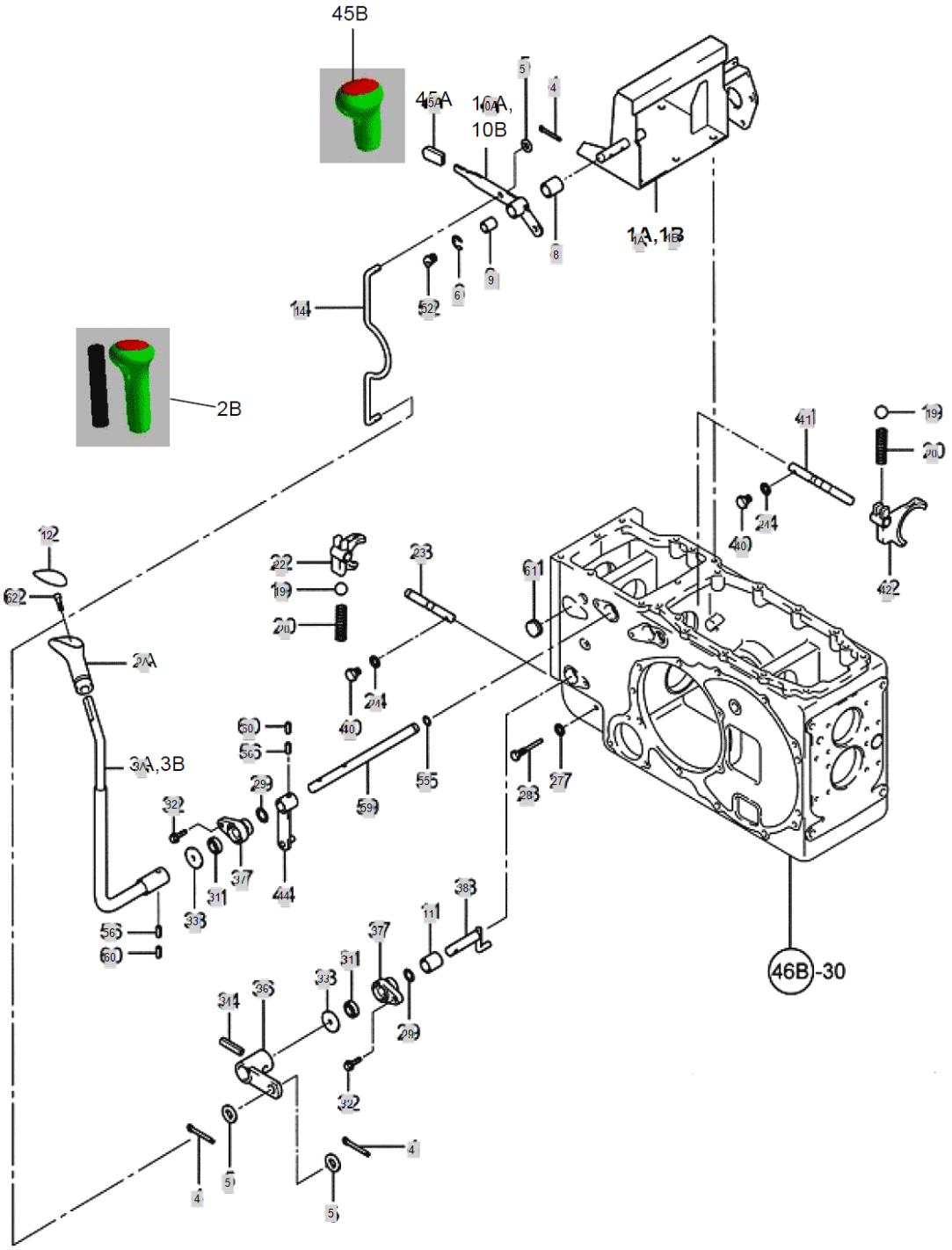

FIG S044 4720	FRONT DRIVE RANGE SHIFT	Year/Month 2020/02

KeyNo.	Part Number	Part Name	Quantity	Other
1A	NT44010000C2		1	
1B	NT4401E000C1		1	
2A	FT67200100A2	KNOB,RANGESHIFTLEVER	1	
3A	NT44030000B2	LEVER, RANGE LEVER	1	
4	22417-250250	PIN , COTTER (2-25)	4	
5	22137-100000	WASHER, PLAIN (Φ 10)	4	
6	22272-000150	RING, CIRCLIP (Φ 15)	1	
8	TZ44080000A4	BOSSCREEPER	1	
9	TT70080000A4	BUSH	1	
10A	NT44100000A3	LEVER,FRONTDRIVE	1	
11	TT70090000A4	BUSH	1	
12	NT69010000A2	CAP,RANGESHIFT	1	
14	NT44140000A4	ROD,FRONTDRIVE	1	
19	24190-100001	Ball, Steel (5/16)	2	
20	TT42020000A4	SPRING	2	
21	24311-000110	O-RING, DYNAMIC (Φ11)	1	
22	TN44220000A3	FORKFRONTDRIVE	1	
23	TN44230000A3	SHAFTFRONTDRIVEFORK	1	
24	23414-080000	WASHER, PLAIN (Φ8)	2	
27	23414-100000	PLAIN WASHER (D10)	1	
28	TN44280000A4	PLUG	1	
29	24321-000250	O-RING	2	
31	24421-173007	Seal, Oil (#17-30-07)	2	
32	26013-080252	Bolt, Hexa (8-25)	2	
33	TT65120000A4	COLLARB	2	
34	22351-080028	PIN, SPRING (8-28)	1	
36	NT44360000A4	LEVER,A'SSYB.FRONTDRIVE	1	
37	TN44370000A4	HOLDERSHIFTARM	2	
38	TN44380000A4	LEVERASS'YF.DRIVE	1	
40	TN44400000A4	BOLT	2	
41	TN44410000B3	SHAFT,RANGESHIFTFORK	1	
42	TN44420000A3	FORKRANGESHIFT	1	
44	TN44440000D4	LEVERASS`Y(B),RANGESHAFT	1	
45A	TZ44450000A4	FRONTWDLEVERKNOB	1	
47	TN44470000A4	COLLAR	1	
52	TN44590000A4	GREASENIPPLE	1	
55	TN46180000A4	O-RING	1	
56	22351-080030	PIN, SPRING (8-30)	2	
57	22137-160000	WASHER, PLAIN (Φ 16)	1	
58	26716-160002	NUT	1	
59	TN44520000B3	SHAFT,RANGESHIFTLEVER	1	
60	22351-050030	PIN, SPRING (5-03)	2	
61	TZ44610000A4	PLUG	1	
62	26106-060122	HEX BOLT (6-12)	1	

FIG S045-1 4720	PTO SPEED CHANGE	Year/Month 2020/02

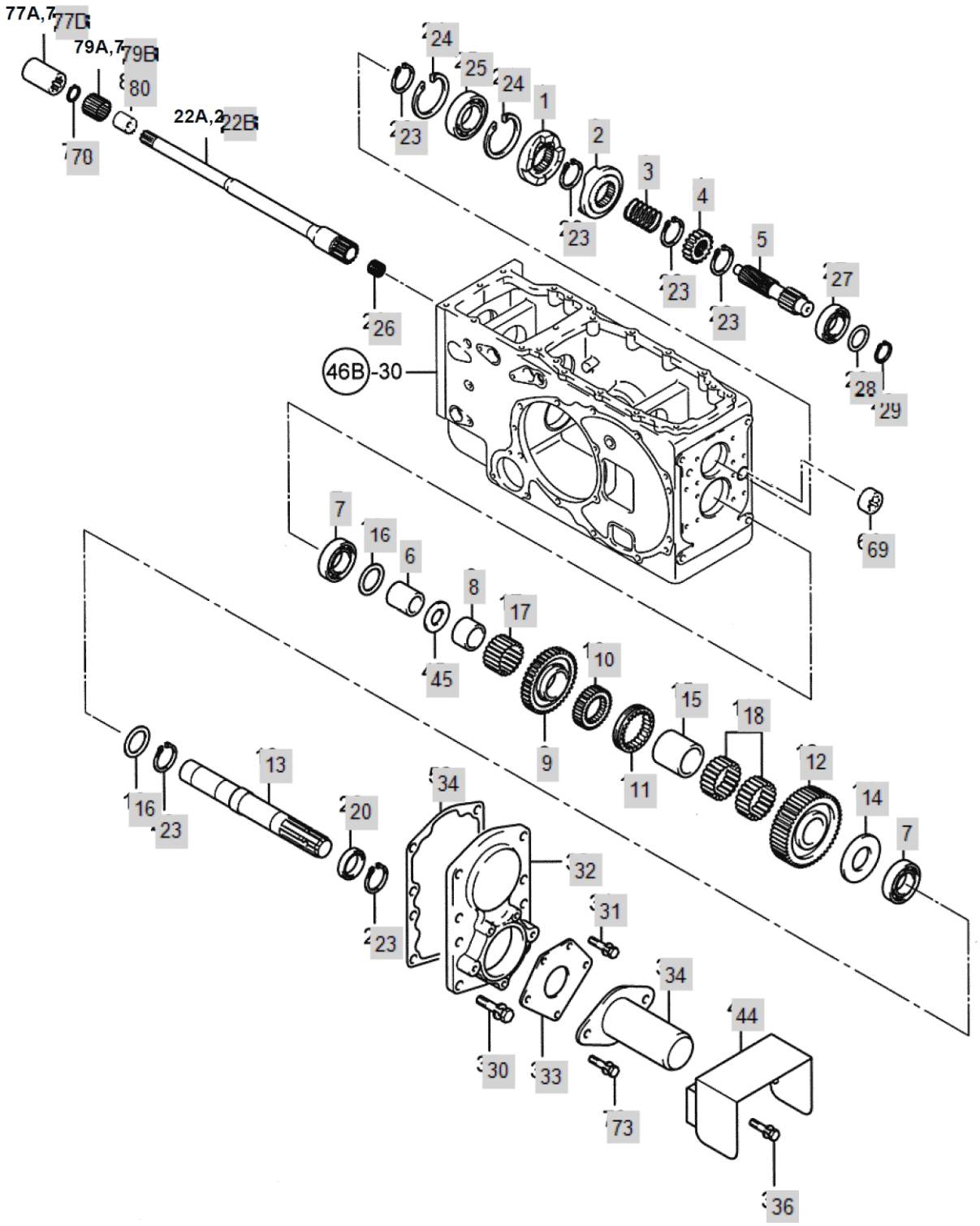

FIG S045-1 4720	PTO SPEED CHANGE	Year/Month 2020/02

KeyNo.	Part Number	Part Name	Quantity	Other
1	TZ45010000A3	CLUTCH1,ONEWAY	1	
2	TZ45020000A3	CLUTCH2,ONEWAY	1	
3	TZ45030000A4	SPRING,ONEWAYCLUTCH	1	
4	TZ45040000A4	GEAR2ND,PTOCHANGE	1	
5	TZ45050000A3	SHAFT,PTOCHANGE	1	
6	NT45450000A4	SPACER	1	
7	24101-063074	Bearing, Ball (#6307)	2	
8	NT45430000A4	NEEDLEBUSH.D	1	
9	NT45930000A3	PTO GEAR 46T	1	
10	NT45100000A3	HUBA.PTO	1	
11	TZ45110000B4	SLEEVE,P.T.O	1	
12	TZ45120000A3	GEARLST,P.T.O	1	
13	NT45130000A3	SHAFT,P.T.O	1	
14	TZ45140000A4	COLLAR	1	
15	TZ45150000A4	BUSHB,NEEDLE	1	
16	TN45120000A4	WASHER	1	
17	24161-455328	NEEDLE BEARING (#45-53-28)	1	
18	24161-455320	NEEDLEBEARING	2	
20	TT62040000A3	PTO OIL SEAL QLF35X60X19	1	
22B	TZ45220000C	SHAFT,P.T.O DRIVE	1	
23	22242-000350	SNAP RING, SHAFT (Φ 35)	5	
24	22252-000720	RING, CIRCLIP (Φ 72)	2	
25	24101-062074	BALL BEARING (#6207)	1	
26	24161-182420	NEEDLEBEARING	1	
27	24111-063064	BALLBEARING6306	1	
28	TN45520000A4	COLLAR	1	
29	22242-000300	SNAP RING, SHAFT (Φ 30)	1	
30	26013-080202	Bolt, Hexa (8-20)	2	
31	26013-060162	Bolt, Hexa (6-16)	3	
32	TN45320000B2	OILSEALCASE	1	
33	TB29080000A3		1	
34	TT80030000A3	P.T.OCOVER	1	
36	26106-080122	Bolt, Hexa (8-12)	4	
44	TZ45440000D3	PTO SAFETY COVER	1	
45	NT45440000A4	COLLAR	1	
69	NT45690000A4	SIGHT GLASS	1	
73	26106-060162	HEXFLANGEBOLT	2	
77B	TN45200000A4	JOINT	1	
78	22252-000180	RING, CIRCLIP (Φ 18)	1	
79B	24161-253020	Bearing, Neddle (#25-30-20)	1	
80	TN45180000A4	BUSH,BEARING	1	

FIG S046 4720	REAR AXLE CASE PTO SHIFT	Year/Month 2020/02

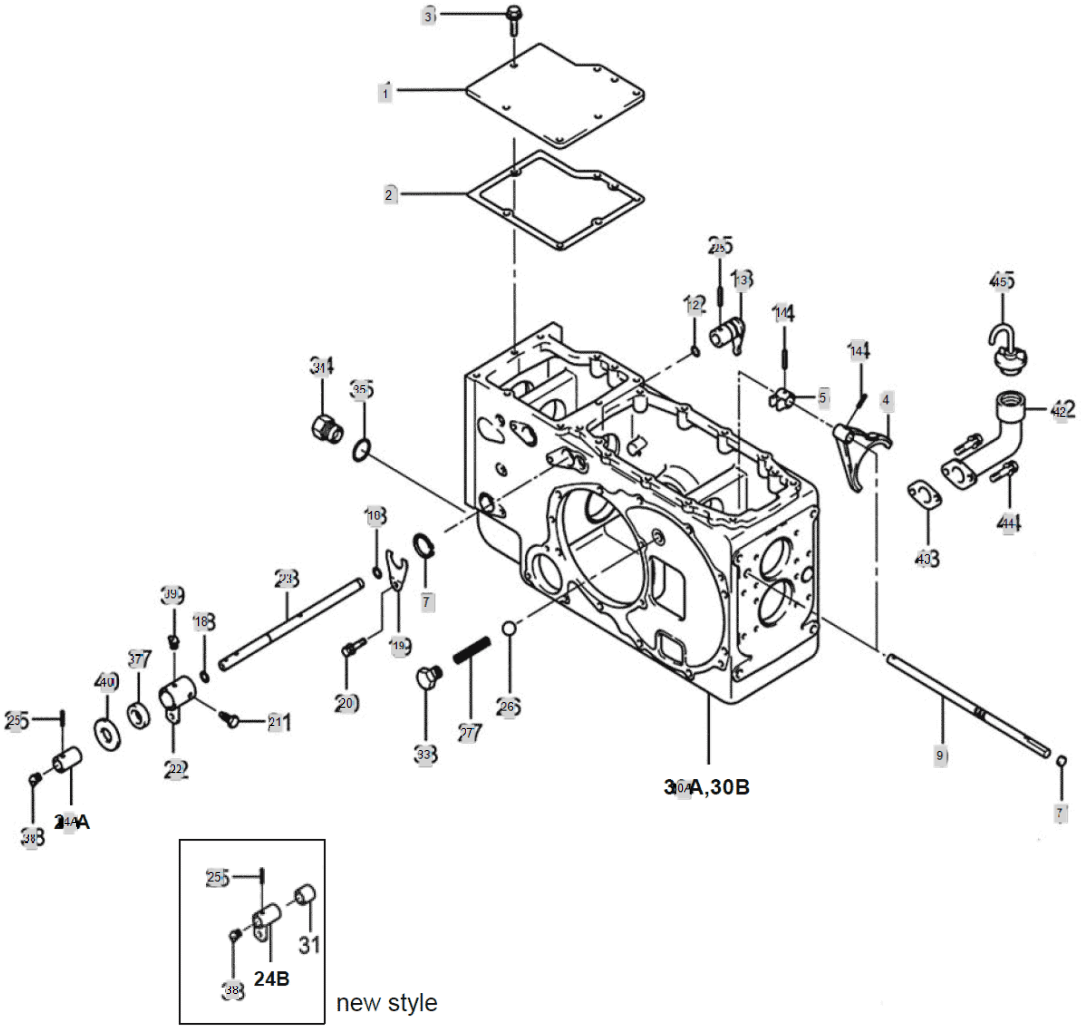

new style

FIG S046 4720	REAR AXLE CASE PTO SHIFT	Year/Month 2020/02

KeyNo.	Part Number	Part Name	Quantity	Other
1	TN46010000A3	COVER,REALAXLECASE	1	
2	TZ46020000A4	PACKING	1	
3	26013-100322	BOLT	7	
4	TZ46040000B3	FORK,PTOSHAFT	1	
5	TN46050000A4	BOSE1-2,PTOSHAFT	1	
7	27260-150000	Cap, Seal (d=15mm)	2	
9	NT46090000A3	SHAFT,P.T.OFORK1-2	1	
12	24311-000240	O-RING, DYNAMIC (Φ24)	1	
13	TN46130000A4	ARMASSYSHIFT	1	
14	22351-060025	PIN, SPRING (6-25)	2	
17	22242-000300	SNAP RING, SHAFT (Φ 30)	1	
18	TN46180000A4	O-RING	2	
19	TN46190000A4	PLATE	1	
20	26013-080122	Bolt, Hexa (8-12)	1	
21	TN46210000A4	BOLTREAMER	2	
22	TN46220000C4	LEVER,PTOSHIFTER	1	
23	TN46230000D3	SHAFT,PTOSHIFTLEVER	1	
24A	TZ46240000A4	COLLAR	1	
25	22351-080030	PIN, SPRING (8-30)	1	
26	24190-100001	Ball, Steel (5/16)	1	
27	TT42020000A4	SPRING	1	
30A	NT46410000E0	REAR AXLE CASE	1	
33	TN46330000A4	BOLT	1	
34	TB28120000C4	DRAIN PLUG	1	
35	24311-000160	O-RING, DYNAMIC (Φ16)	1	
37	22421-173007	OILSEAL(TC)	1	
38	TN46380000A4	GREASENIPPLE	1	
39	TA27160000A4	GREASE NIPPLE	1	
40	TT65120000A4	COLLARB	1	
42	NT46420000B3	OILINTAKEASS'Y	1	
43	NT46430000A4	PACKING,OILINTAKE	1	
44	26013-080202	Bolt, Hexa (8-20)	2	
45	FT80370000A4	CAP,INTAKE	1	

FIG S047 4720	LEVER ASS'Y PTO SPEED CHANGE	Year/Month 2020/02

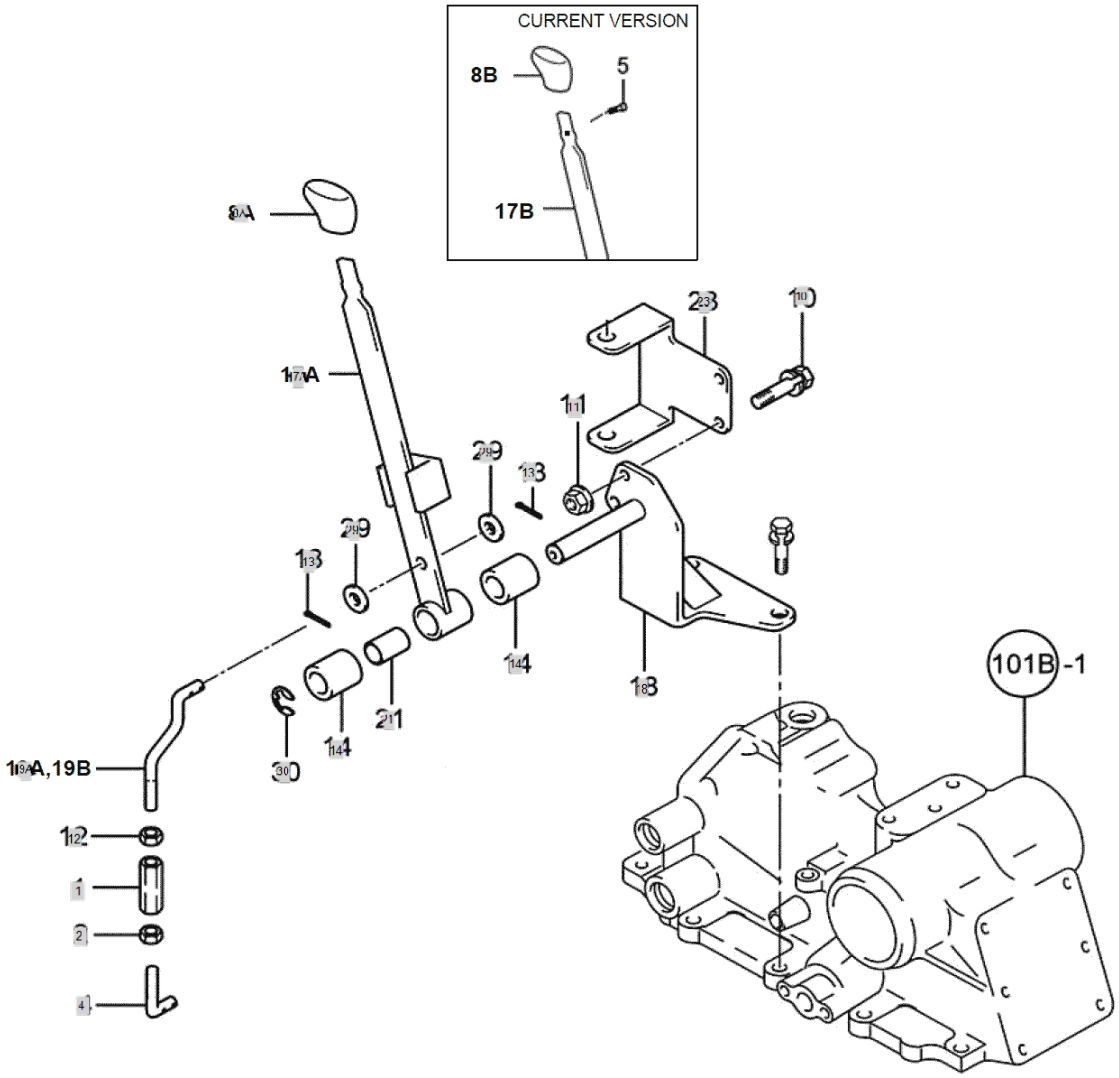

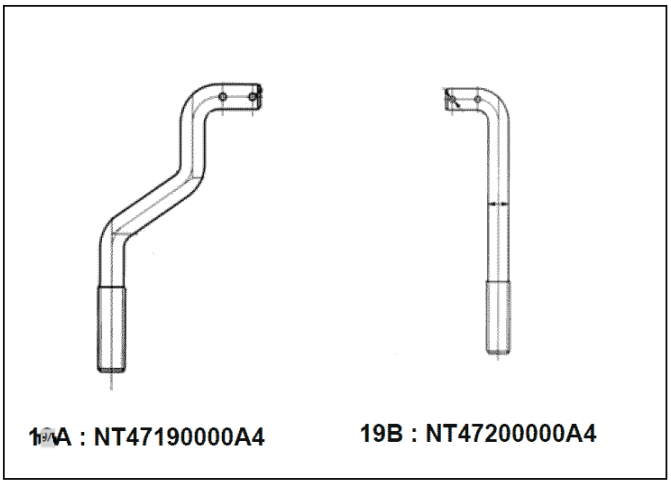

FIG S047 4720	LEVER ASS'Y PTO SPEED CHANGE	Year/Month 2020/02

KeyNo.	Part Number	Part Name	Quantity	Other
1	TT71010000A4	ADJUST	1	
2	TT71020000A4	NUT (LH)	1	
4	TN47040000A4	ROD, PTO SHIFT	1	
8A	TC99140000A3	KNOB(PTO)	1	
10	26013-080122	Bolt, Hexa (8-12)	2	
11	26367-080002	HEX FLANGE NUT (Φ8)	2	
12	26756-100002	FIXEDNUT	1	
13	22417-250250	PIN , COTTER (2-25)	4	
14	TZ47140000A4	COLLAR	2	
17A	TZ47170000A3	LEVER,PTOCHANGE	1	
18	NT47180000A2	SHAFT,P.T.OSHIFTLEVER	1	
19A	NT47190000A4	ROD,P.T.O	1	
21	TT70080000A4	BUSH	1	
23	TZ47230000B3	BRACKET,SAFETYSWITCH	1	
29	22137-100000	WASHER, PLAIN (Φ 10)	4	
30	22272-000150	RING, CIRCLIP (Φ 15)	1	

FIG S048 4720	HOUSING REAR AXLE	Year/Month 2020/02

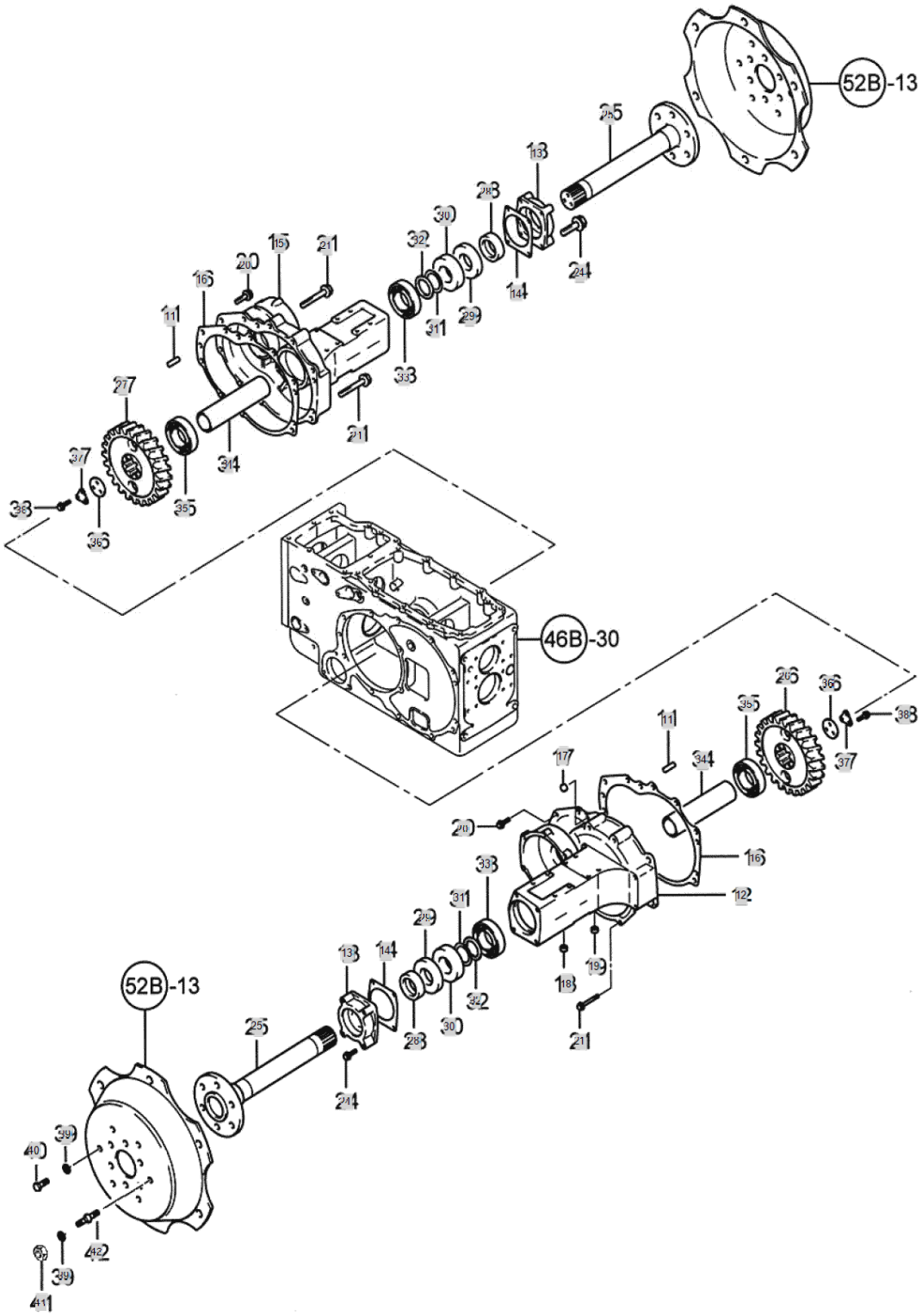

FIG S048 4720	HOUSING REAR AXLE	Year/Month 2020/02

KeyNo.	Part Number	Part Name	Quantity	Other
11	22312-100180	PIN, DOWEL (10-18)	4	
12	TN48140000B0	REAR AXLE HOUSING(L) -> TN48140000C0	1	
13	TB29130000A3	CASEOILSEAL	2	
14	TZ48140000A4	PACKING,OILSEALCASE	2	
15	TN48150000D0	REAR AXLE HOUSING(R)	2	
16	TZ48160000A3	PACKING, HOUSING	2	
17	TB29170000A4	PLUG9.5	4	
18	TB26070000A4	PLUG11	6	
19	TB18040000A4	PLUG13	2	
20	26013-120302	HEX BOLT W/WASHER	8	
21	26013-120852	BOLT	12	
24	26013-100552	Bolt, Hexa (10-55)	8	
25	TN48250000A2	SHAFT	2	
26	TN48260000A3	GEARLHREARAXLE	2	
27	TN48270000A3	GEAR(R),REARAXLE.	2	
28	TN48280000A4	BUSH	2	
29	TB29290000A4	OILSEALVC75X100X7	2	
30	TT82070000A3	OILSEAL	2	
31	24321-000600	SEAL,ORING	2	
32	TT85100000A4	O-RING.SPACER	2	
33	24101-062124	Bearing, Ball (#6212)	2	
34	TB29340000A4	SPACER	2	
35	24101-063124	Bearing, Ball (#6312)	2	
36	TB29360000A4	WASHER	2	
37	TB29370000A4	WASHER	2	
38	26013-100322	BOLT	6	
39	TB29430000A4	WASHER	16	
40	TB29440000A4	BOLTM14X35	12	
41	TB29420000A4	NUT M14	4	
42	TT85150000A4	Bolt	4	

FIG S049 4720	DRIVING PART, REAR AXLE	Year/Month 2020/02

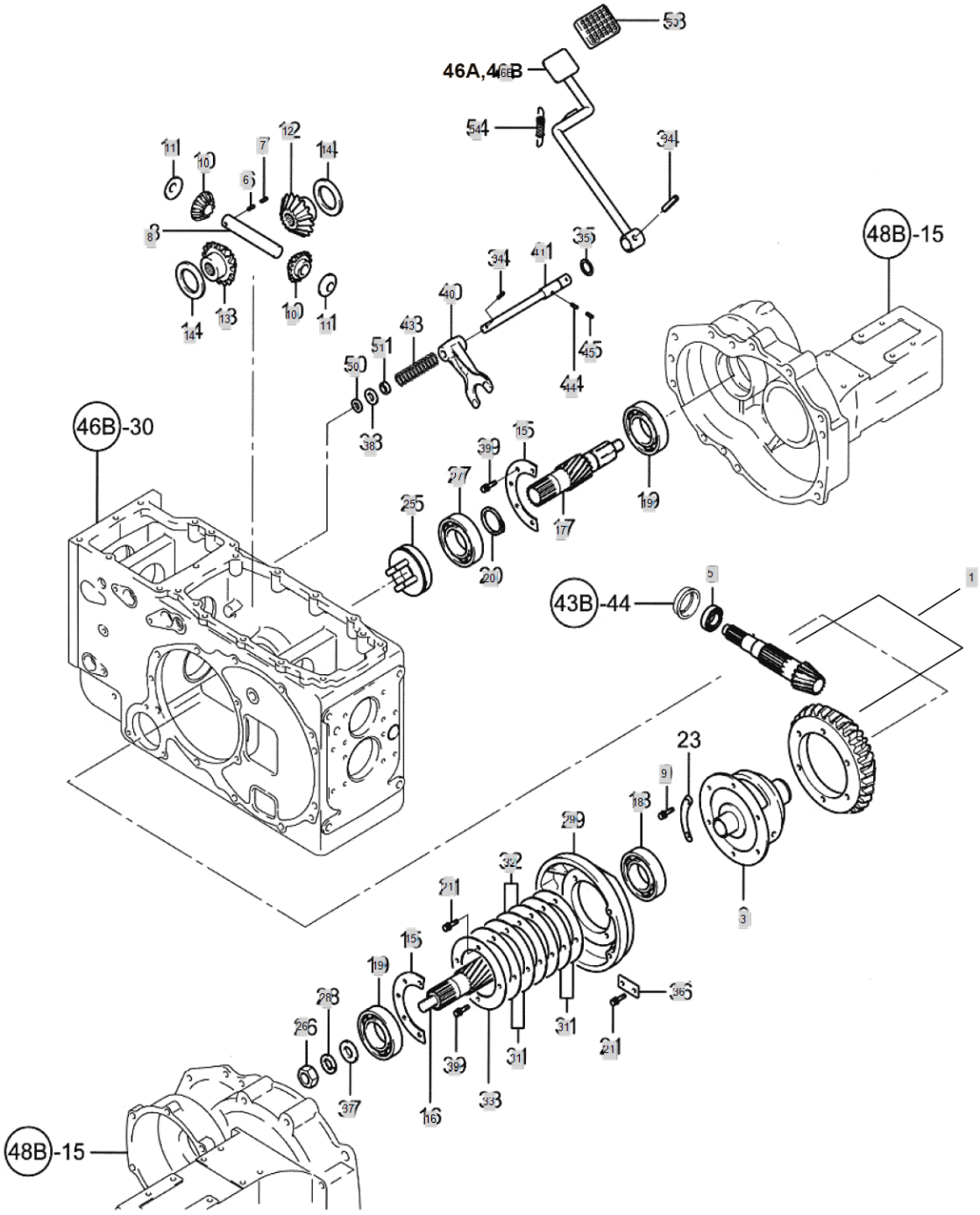

FIG S049 4720	DRIVING PART, REAR AXLE	Year/Month 2020/02

KeyNo.	Part Number	Part Name	Quantity	Other
1	TN49500000C9	RING GEAR ASSY	1	
3	TN49030000D2	CASE,DIFFERENTIAL -> TA00022799A	1	
5	TT78020000A3	BEARINGNJ307R	1	
6	22312-060360	PIN, DOWEL (6-36)	1	
7	22351-060032	PIN, SPRING (6-32)	1	
8	TF64080000A4	PINIONSHAFT	1	
9	TF64090000A4	BOLT	6	
10	TF64100000A3	PINION	2	
11	TF64110000A4	PINIONLINER	2	
12	TF64120000A3	DIFF.SIDEGEAR(A)	1	
13	TF64130000A3	DIFF.SIDEGEAR(B)	1	
14	TF64140000B4	SIDEGEARLINER	1	
15	TB32150000A4	RETAINER	2	
16	TN49160000A3	PINIONL,FINAL	1	
17	TN4917000SA3	PINIONR,FINAL	1	
18	24101-062114	Bearing, Ball (#6211)	1	
19	TF64190000A3	BALL BEARING (#6308HL) -> FGG724	2	
20	22242-000500	SNAP RING, SHAFT (Φ50)	1	
21	26013-080202	Bolt, Hexa (8-20)	8	
25	TF64250000B3	THRUST, DIFF-LOCK ASSY	1	
26	26776-220002	NUT	2	
27	24101-060102	BALL BEARING (#6010)	1	
28	22217-220000	WASHER, SPRING (Φ 22)	2	
29	TN49550000B2	CARRIOR	1	
30	TN49590000A4	RETAINER	1	
31	TZ49560000A4	SHIMA	2	
32	TZ49570000A4	SHIMB	2	
33	TZ49580000A4	SHIMC	2	
34	22351-080032	PIN, SPRING (8-32)	2	
35	24311-000160	O-RING, DYNAMIC (Φ16)	1	
36	TB32360000A4	RETAINER	1	
37	TN49370000A4	WASHER	2	
38	TN49380000A4	WASHER	1	
39	26013-080202	Bolt, Hexa (8-20)	10	
40	TN49400000A2	FORK DIFFERENTIAL LOCK	1	
41	TN49410000B3		1	
43	TN49430000A4	SPRING	1	
44	22351-080040	PIN, SPRING (8-40)	1	
45	22351-080040	PIN, SPRING (8-40)	1	
46B	NT4946Y000A3	PEDAL, DIFFERENTIAL	1	
49	TT69090000B4	COLLAR	1	
50	22121-140000	WASHER, PLAIN (Φ 14)	1	
51	24421-152507	Seal, Oil (#15-25-07)	1	
52	22351-060025	PIN, SPRING (6-25)	1	
53	TN01330000A4	RUBBERCOVER	1	

FIG S049 4720	DRIVING PART, REAR AXLE	Year/Month 2020/02

KeyNo.	Part Number	Part Name	Quantity	Other
54	TTB1300000A4	SPRING,RETURN	1	
59	TN49500000C9	RING GEAR ASSY	1	

FIG S050 4720	BRAKE	Year/Month 2020/02

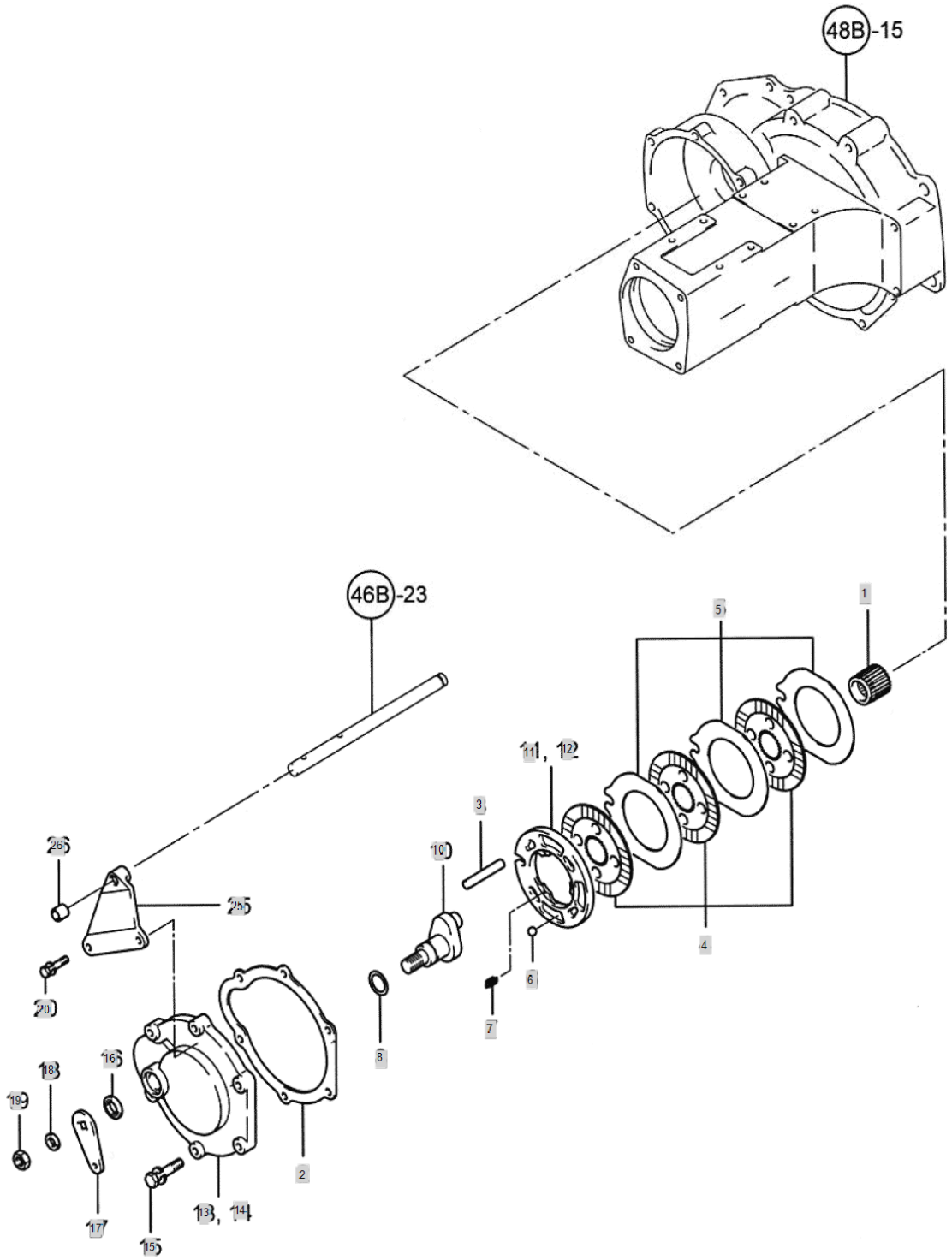

FIG S050 4720	BRAKE	Year/Month 2020/02

KeyNo.	Part Number	Part Name	Quantity	Other
1	TN50010000A3	HUBSPLINE	2	
2	TZ50020000A4	PACKING	2	
3	TN50030000A4	SHAFT	2	
4	TN50040000A2	FRICTIONPLATE	8	
5	TN50050000A2	PLATE	8	
6	24190-200000	BALL5/16STEEL	8	
7	TN50070000A4	SPRING	6	
8	24311-000250	O-RING, DYNAMIC (Φ25)	2	
10	TN50100000B3	CAP	2	
11	TN50110000B2	CAM PLATE(L)	1	
12	TN50120000B2	CAM PLATE (R)	1	
13	TN50130000A1	COVER(L),BRAKE	1	
14	TN50140000A1	COVER(R),BRAKE	1	
15	26013-100402	Bolt, Hexa (10-40)	10	
16	24421-253505	Seal, Oil (#25-35-05)	2	
17	TN50170000A4	LEVER	2	
18	22217-160000	WASHER, SPRING (Φ 16)	2	
19	26736-160002	HEXNUT	2	
20	26013-100502	BOLT,W/SW	2	
25	TN50250000A3	SHAFTHOLDER	1	
26	TT70080000A4	BUSH	1	

FIG S053 4720	BRAKE, CLUTCH PEDAL	Year/Month 2020/02

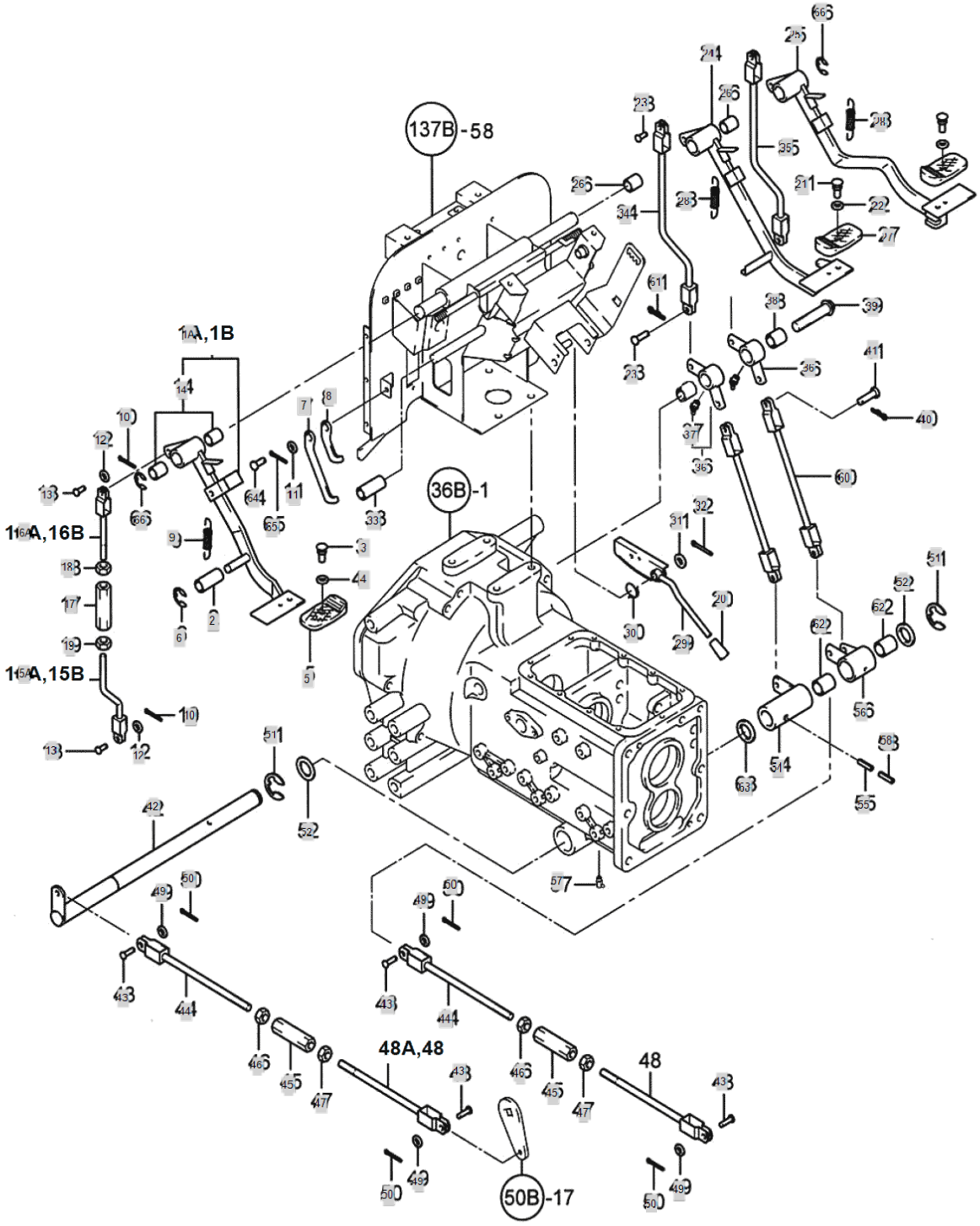

FIG S053 4720	BRAKE, CLUTCH PEDAL	Year/Month 2020/02

KeyNo.	Part Number	Part Name	Quantity	Other
1A	NT53010000D2		1	
2	TC73020000A3	PIPE(CLUTCHSTOPPER)	1	
3	TC73030000A4	RIVET(PEDALHEAD)	1	
4	TC73040000A4	WASHER(REVET)	1	
5	TC73050000A3	PEDALHEADCOVER	1	
6	22272-000120	RING, CIRCLIP (Φ 12)	1	
7	NT53140000A4	LOCK(DRIVING)	1	
8	TC73070000A4	LOCK(CLUTCHPEDAL)	1	
9	NT53290000A3	RETURN SPRING (TC73090000A4)	1	
10	RR64050000A4	Pin, Come-Off Snap (Φ8)	2	
11	22137-080000	WASHER, PLAIN (Φ 08)	1	
12	22137-100000	WASHER, PLAIN (Φ 10)	2	
13	TT83010000A4	TURN BUCKLE, 10X70	2	
14	TC73010200A4	BUSH25*28*20	2	
15A	NT53270000A3	CLUTCHROD(LOWER)	1	
16A	NT53550000A3	CLUTCHROD(UPPER)	1	
17	TT67010000A4	TURN BUCKLE	1	
18	26716-120002	BOLT,CYLINDER HEAD(B)	1	
19	TT67040000A4	NUT.LH	1	
20	TB16020000A4	LEVERKNOB	1	
21	TC73030000A4	RIVET(PEDALHEAD)	2	
22	TC73040000A4	WASHER(REVET)	2	
23	TT83010000A4	TURN BUCKLE, 10X70	4	
24	NT53020000A2	BRAKEPEDAL(L)	1	
25	NT53030000A2	BRAKEPEDAL(R)	1	
26	TC73010200A4	BUSH25*28*20	4	
27	TC73050000A3	PEDALHEADCOVER	2	
28	NT53290000A3	RETURN SPRING (TC73090000A4)	2	
29	TCB6120000C2	PARK BRAKE LEVER	1	
30	TCB6130000A4	LOCKSPRING	1	
31	22137-120000	WASHER, PLAIN (Φ 12)	1	
32	22417-250300	PIN , COTTER (2-30)	1	
33	TCB6300000A3	PIPE	2	
34	NT53050000A3	BRAKEROD,FRONT(L)	1	
35	NT53040000A3	BRAKEROD,FRONT(R)	1	
36	NT53090000B3	ARM	2	
37	24764-060000	GREASE NIPPLE	2	
38	TCB6240000A4	SPACER20/29	2	
39	NT53120000A4	FLANGEBOLT20	1	
40	RR64050000A4	Pin, Come-Off Snap (Φ8)	4	
41	TT83010000A4	TURN BUCKLE, 10X70	4	
42	TZ53320000A3	SHAFT,PEDALROD	1	
43	TT41090000A4	PIN10X23	4	
44	NT53250000B4		2	
45	TT67010000A4	TURN BUCKLE	2	

FIG S053 4720	BRAKE, CLUTCH PEDAL	Year/Month 2020/02

KeyNo.	Part Number	Part Name	Quantity	Other
46	26716-120002	BOLT,CYLINDER HEAD(B)	2	
47	TT67040000A4	NUT.LH	2	
48B	NT53240000A4	ROD[L]	2	
49	22317-100000	PLAIN WASHER	4	
50	22417-200300	PIN , COTTER (2-30)	4	
51	22271-000240		2	
52	TB35120000B4	WASHER B	2	
54	NT53110000A3	BRAKELINK(L)REAR	1	
55	22351-080050	PIN, SPRING (8-50)	1	
56	NT53100000B3	BRAKELINK(R)REAR	1	
57	TA27160000A4	GREASE NIPPLE	3	
58	22351-050050	PIN, SPRING (5-05)	1	
60	NT53060000A3	BRAKEROD(M)	2	
61	RR64050000A4	Pin, Come-Off Snap (Φ8)	4	
62	TB26240000A4	BUSH	2	
63	TB35110000A4	WASHERA	1	
64	22487-080120	PIN, HEAD (08-12)	1	
65	22417-160200	PIN , COTTER (1-20)	1	
66	22272-000190	RING, CIRCLIP (Φ 19)	2	

FIG S067 4720	LEVER, MAIN SHIFT	Year/Month 2020/02

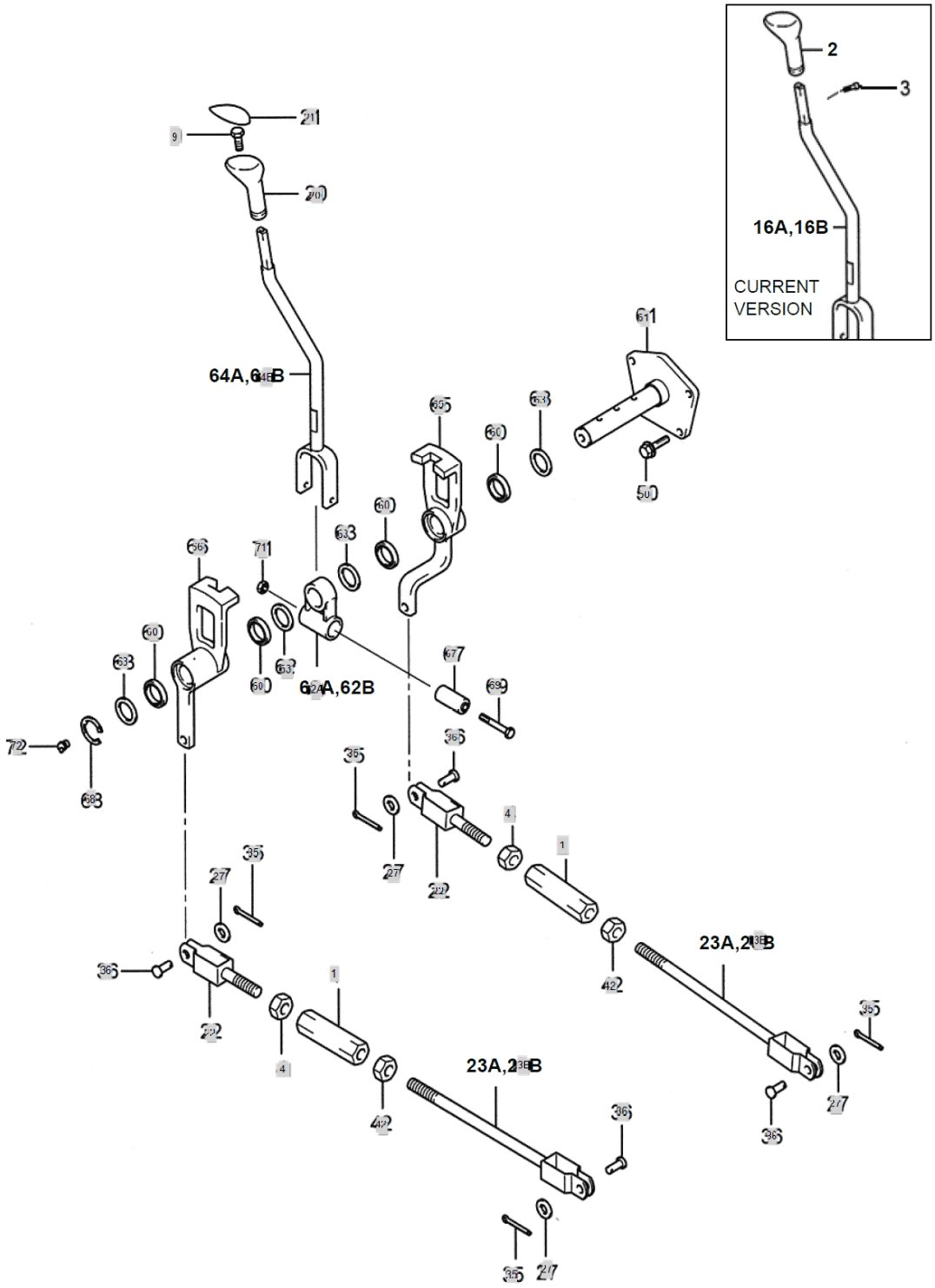

FIG S067 4720	LEVER, MAIN SHIFT	Year/Month 2020/02

KeyNo.	Part Number	Part Name	Quantity	Other
1	TT67010000A4	TURN BUCKLE	2	
4	TT67040000A4	NUT.LH	2	
9	26106-060122	HEX BOLT (6-12)	1	
20	FT67200100A2	KNOB,RANGESHIFTLEVER	1	
21	NT67210000A2	CAP,MAINSHIFT	1	
22	NT53250000B4		2	
23B	NT53240000A4	ROD[L]	2	
27	22137-100000	WASHER, PLAIN (Φ 10)	4	
35	22417-200250	PIN , COTTER (2-25)	4	
36	22487-100240	PIN, HEAD (10-24)	4	
42	26716-120002	BOLT,CYLINDER HEAD(B)	2	
50	26013-080202	Bolt, Hexa (8-20)	4	
60	24430-253505	Seal, Oil (#25-35-05)	4	
61	NT67610000A2	SHAFT,MAINSHIFTLEVER	1	
62A	TT67620000A4	HOLDER	1	
63	NT67630000A4	WASHER	4	
64B	NT6764H000A3	LEVER,MAIN SHIFT	1	
65	NT67650000B2	ARM-B	1	
66	NT67660000B2	ARM-A	1	
67	FT67670000A4	RUBBERSPRING	1	
68	22272-000190	RING, CIRCLIP (Φ 19)	1	
69	26107-080752		1	
71	26341-080002	U-NUT	1	
72	24764-020000	GREASENIPPLE	1	

FIG S099 4720	HYDRAULIC PUMP	Year/Month 2020/02

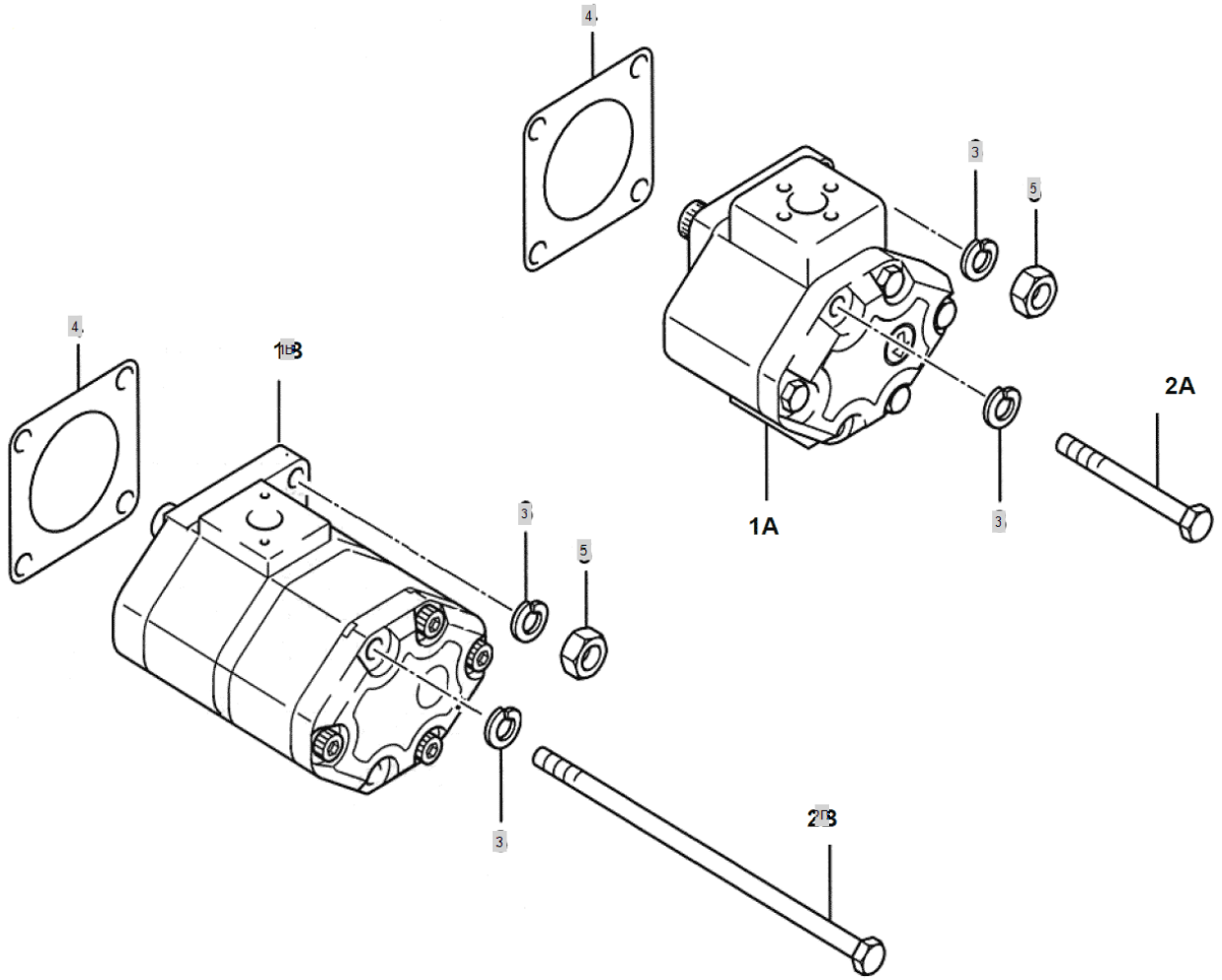

FIG S099 4720	HYDRAULIC PUMP	Year/Month 2020/02

KeyNo.	Part Number	Part Name	Quantity	Other
1B	FT99040000A3	HYDTANDEMPUMP7.2x13	1	
2B	NT99020000A4	BOLTFORTENDEMNPUMP	2	
3	22217-080000	WASHER, SPRING (Φ 08)	4	
4	HH02080000A4	PACKING,HYD.PUMP	1	
5	26716-080002	NUT,HEX (D8)	2	

FIG S101 4720	CASE HYD CYLINDER	Year/Month 2020/02

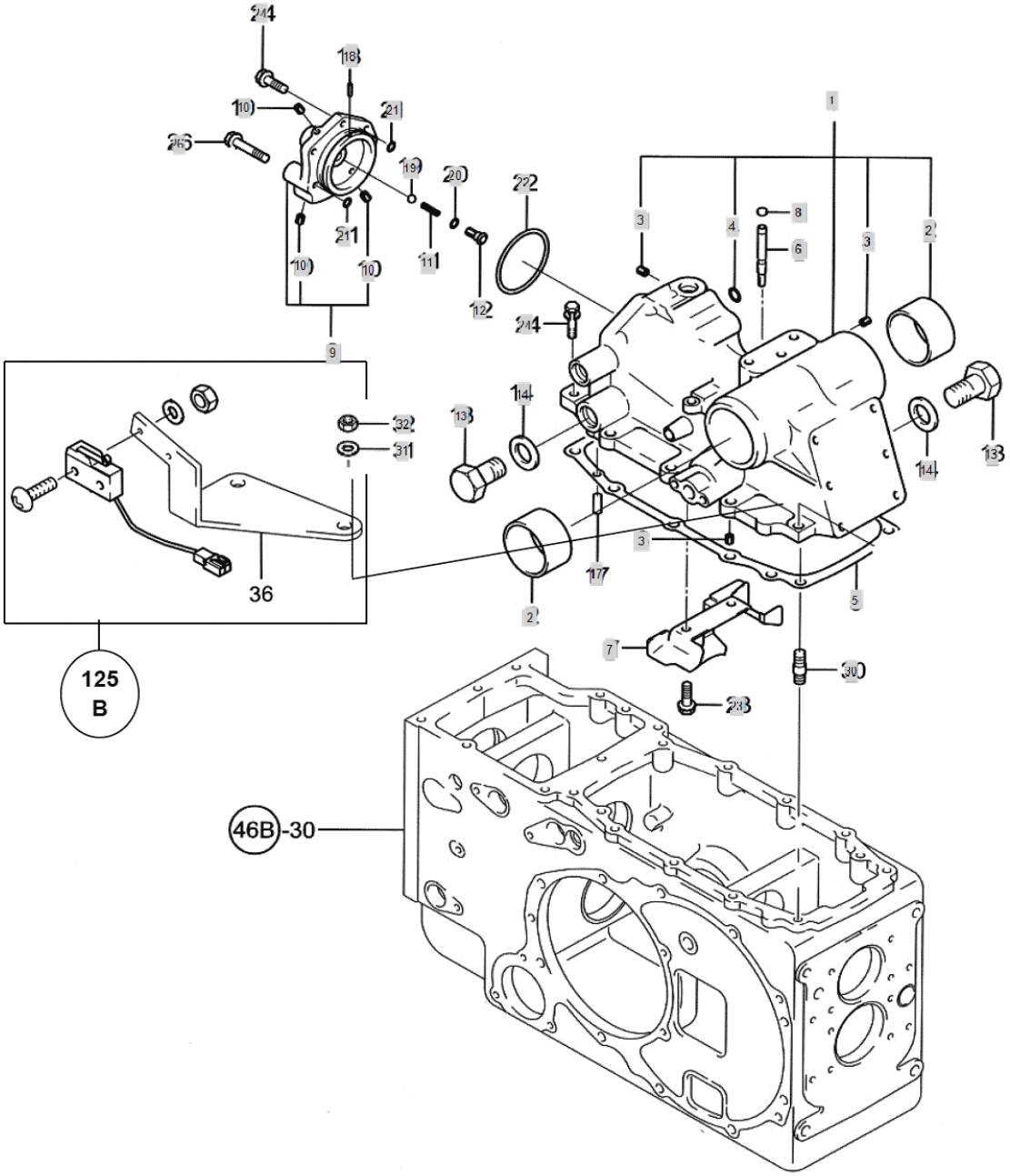

FIG S101 4720	CASE HYD CYLINDER	Year/Month 2020/02

KeyNo.	Part Number	Part Name	Quantity	Other
1	TA00000611A	HYDRAULIC CYLINDER ASS'Y(0PORT,P)	1	
2	TTA1020000A4	BUSH	2	
3	23871-020000	Plug, Pipe	3	
4	24311-000110	O-RING, DYNAMIC (Φ11)	1	
5	TZA1050000A3	PACKING,HYD.CYL.CASE	1	
6	FTA1060000A4	AIR BREATHER	1	
7	TTA1070000A3	OILGUIDE	1	
8	FTA1080000B4	PLUG,BRAETHER	1	
9	TTA1090000A9	HEADCLTLINDER	1	
10	23871-010000	PLUG	3	
11	TTA1110000A4	SPRING,CHECKVALVE	1	
12	TTA1120000A4	PLUG,CHECKVALVE	1	
13	TTA1130000A4	PLUG	2	
14	TTA1140000A4	PACKING	2	
17	22312-100180	PIN, DOWEL (10-18)	2	
18	22351-040016	PIN, SPRING (4X16)	1	
19	24190-130003	BALLSTEEL	1	
20	24315-000120	O-RING	1	
21	24315-000140	O-RING	2	
22	24325-000800	O-RING	1	
23	26013-080122	Bolt, Hexa (8-12)	2	
24	26013-120352	SCREW,CAPTIVEWASHERCAP	5	
26	26013-120552	BOLT,W/SW	1	
30	26216-120352	STEELBOLT	5	
31	22217-120000	WASHER, SPRING (Φ 12)	5	
32	26716-120002	BOLT,CYLINDER HEAD(B)	5	

FIG S103-1 4720	SCV VALVE SUPPORT	Year/Month 2020/02

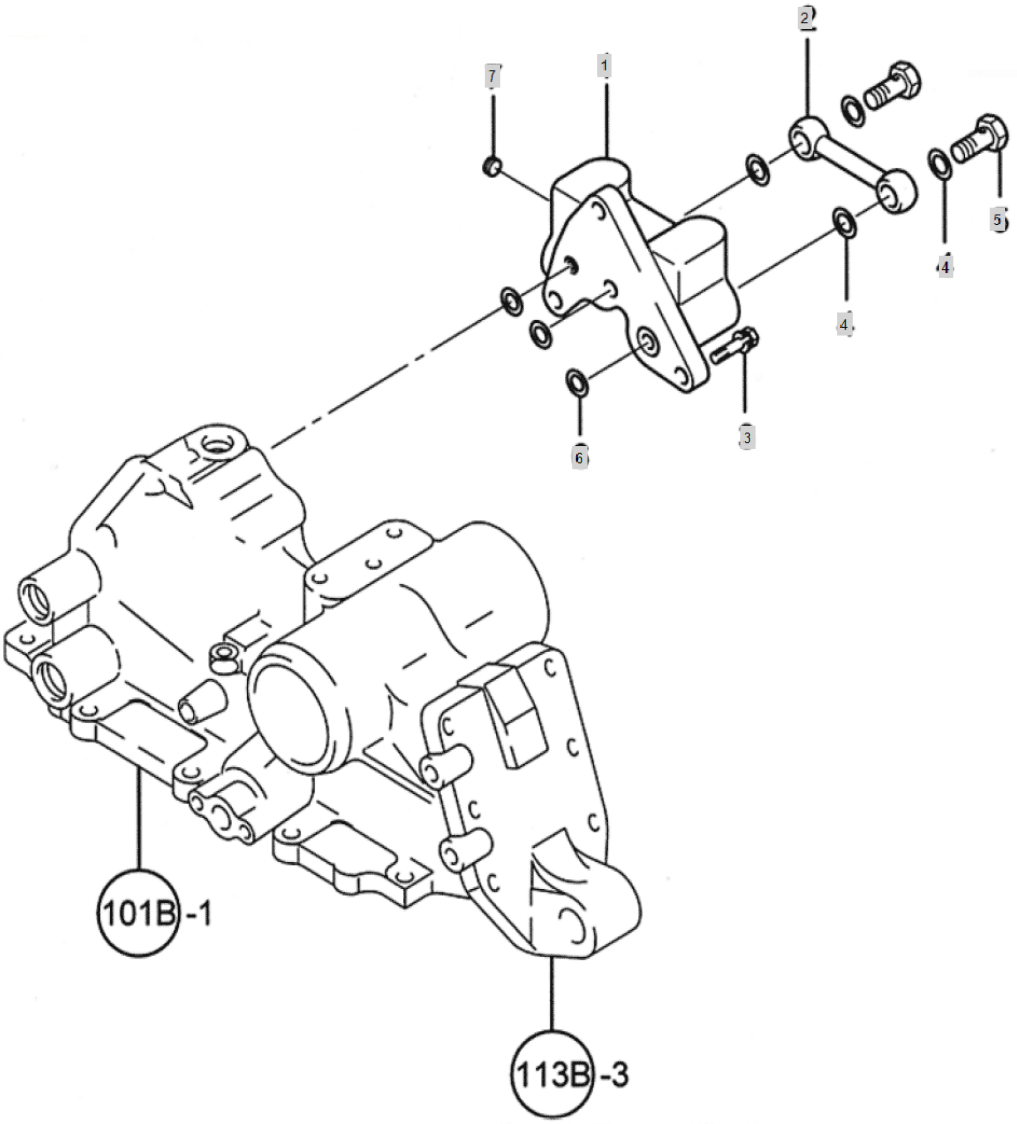

FIG S103-1 4720	SCV VALVE SUPPORT	Year/Month 2020/02

KeyNo.	Part Number	Part Name	Quantity	Other
1	TTA3350000A2	S.C.VSUPPORT	1	
2	TZA3410000B3	PIPE, RETURN	1	
3	26013-080252	Bolt, Hexa (8-25)	3	
4	23414-200026	WASHER, PLAIN (Φ 20)	4	
5	TTB4180000A4	BOLT	2	
6	24315-000120	O-RING	3	
7	23871-010000	PLUG	1	

FIG S104 4720	3 POINT LIFT PISTON ASS'Y	Year/Month 2020/02

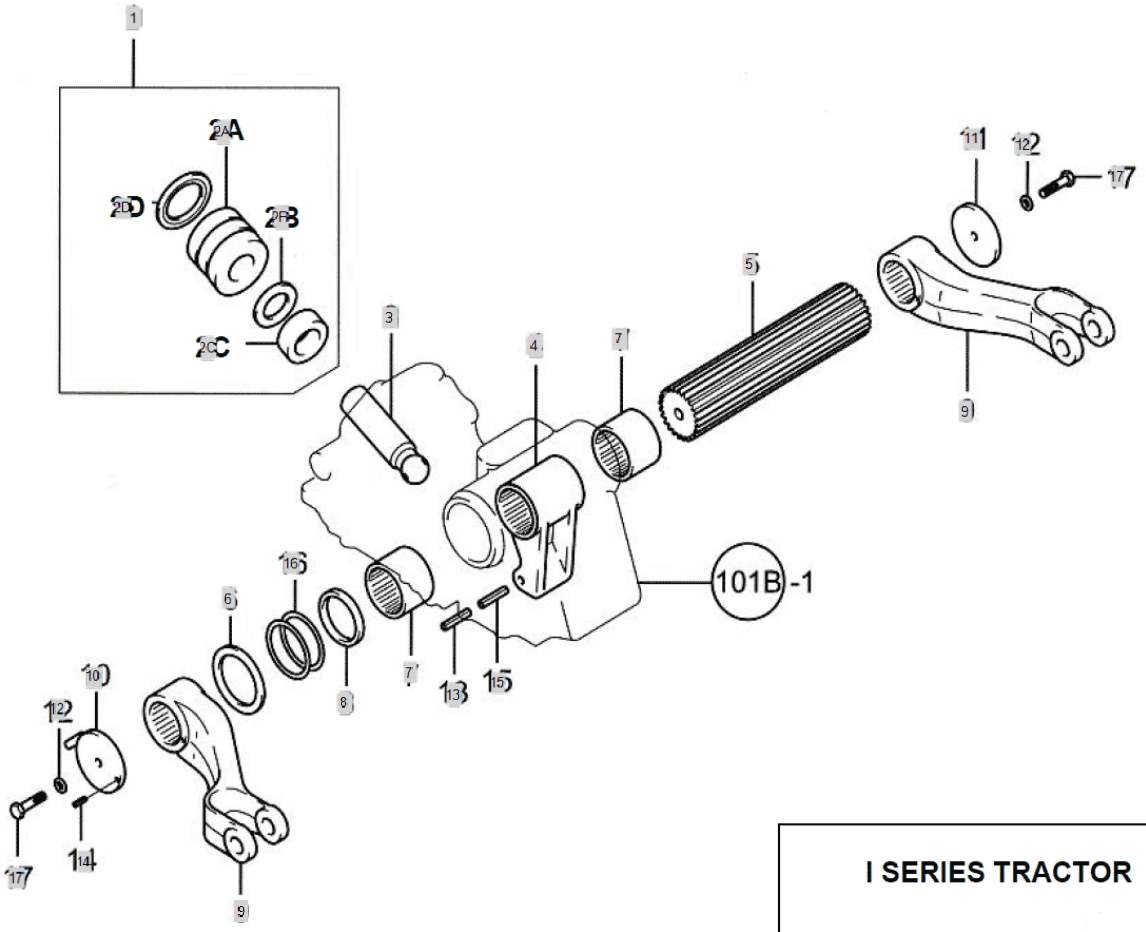

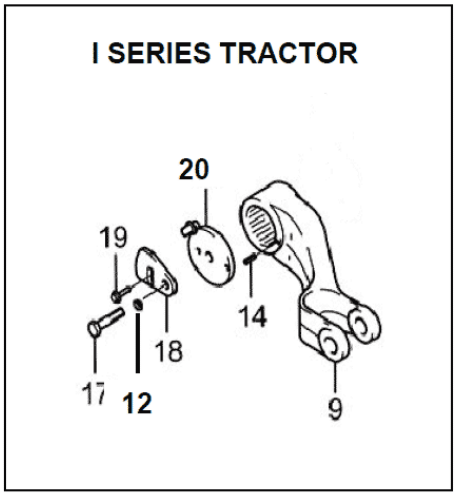

FIG S104 4720	3 POINT LIFT PISTON ASS'Y	Year/Month 2020/02

KeyNo.	Part Number	Part Name	Quantity	Other
1	TNA4010000C9	HYD PISTON ASSY	1	
2A	TNA401A000C3	PISTON	1	
2B	TB36400000A4	RING, BACKUP	1	
2C	TNA401C000A4	RING,WEAR	2	
2D	TNA4020000A9	U-PACKING	1	
3	TTA4030000A3	ROD,PISTON	1	
4	TTA4040000A3	CRANKLIFT	1	
5	TTA4050000A3	SHAFT,LIFTLINK	1	
6	TTA4060000A4	WASHERTHRUST	2	
7	TTA4070000A4	SLEEVELIFTLINKSHAFT	2	
8	TTA4080000A4	SEAL,SPLINE	2	
9	TTA4090000A3	LIFTARM	2	
10	TTA4100000B4		1	
11	TTA4110000A4	RETAINER,LIFTSHAFT	1	
12	22217-120000	WASHER, SPRING (Φ 12)	2	
13	22351-050063	PIN, SPRING (5-06)	1	
14	22351-060016	PIN, SPRING (6-16)	1	
15	22351-080063	PIN, SPRING (8-63)	1	
16	24321-000650	O-RING, FIX(Φ65)	4	
17	26116-120352	BOLT	2	

FIG S106 4720	3 POINT LIFT CONTROL VALVE	Year/Month 2020/02

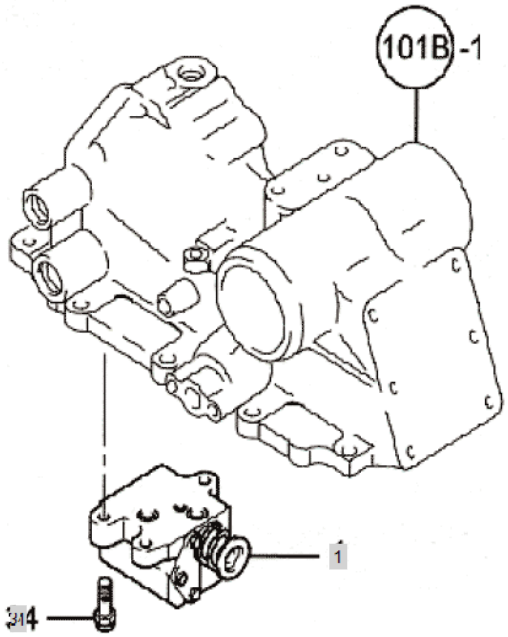

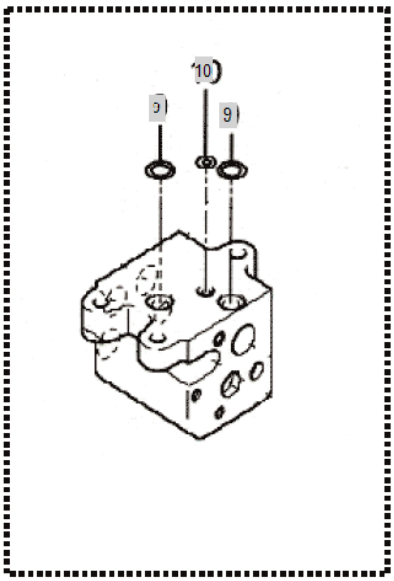

FIG S106 4720	3 POINT LIFT CONTROL VALVE	Year/Month 2020/02

KeyNo.	Part Number	Part Name	Quantity	Other
1	TTA6010000A3	CONTROL VALVE ASSY	1	
9	24311-000140	O-RING, DYNAMIC (Φ14)	2	
10	TTA6100000A9	O-RING(P)	1	
34	26450-080202	HEXAGONSOCKETCAPBOLT	3	

FIG S108 4720	3 POINT LIFT RELIEF VALVE	Year/Month 2020/02

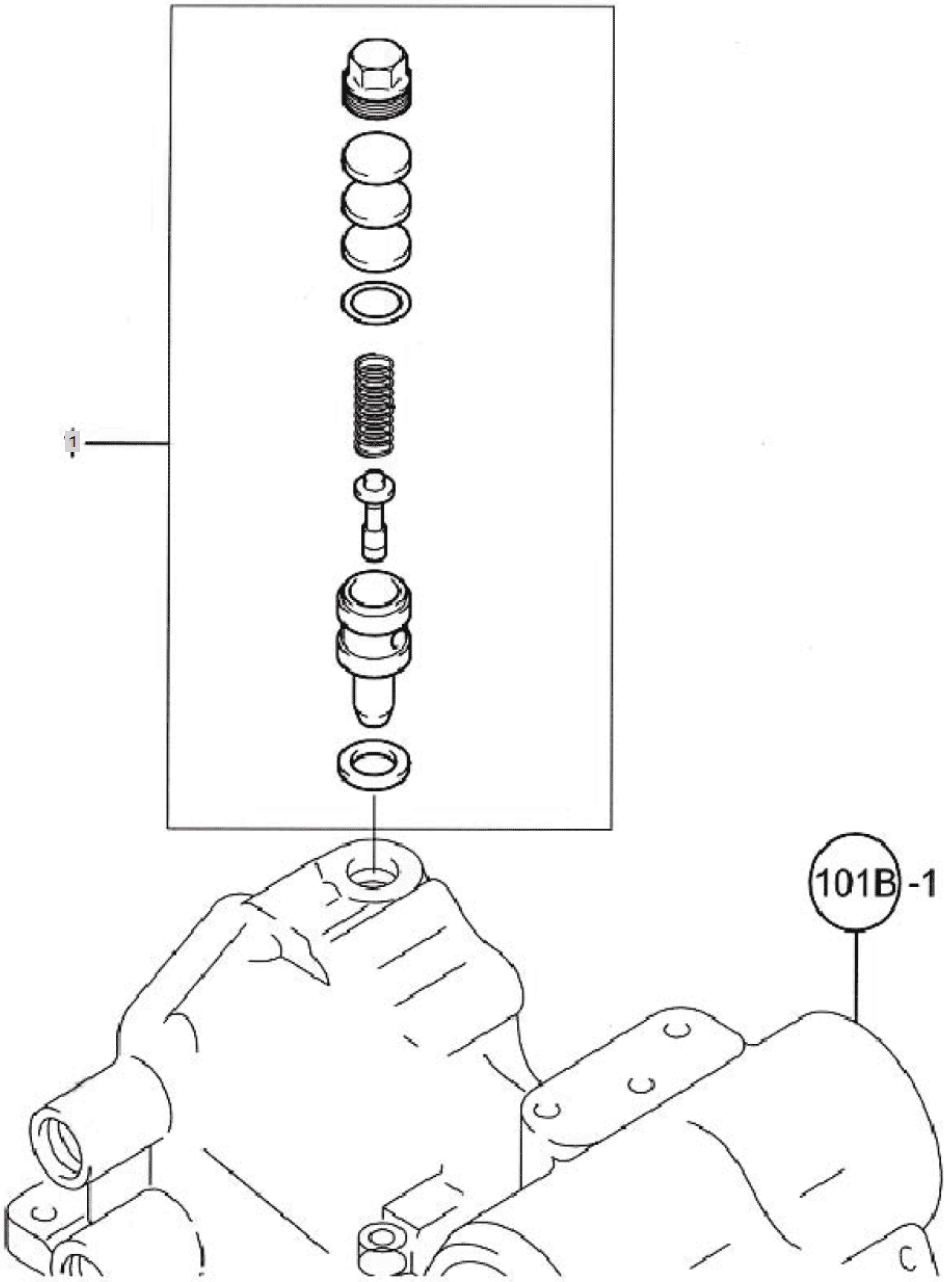

FIG S108 4720	3 POINT LIFT RELIEF VALVE	Year/Month 2020/02

KeyNo.	Part Number	Part Name	Quantity	Other
1	TTA8010000A3	VALVECMP.RELIEF	1	

FIG S109 4720	3 POINT LIFT STOP VALVE	Year/Month 2020/02

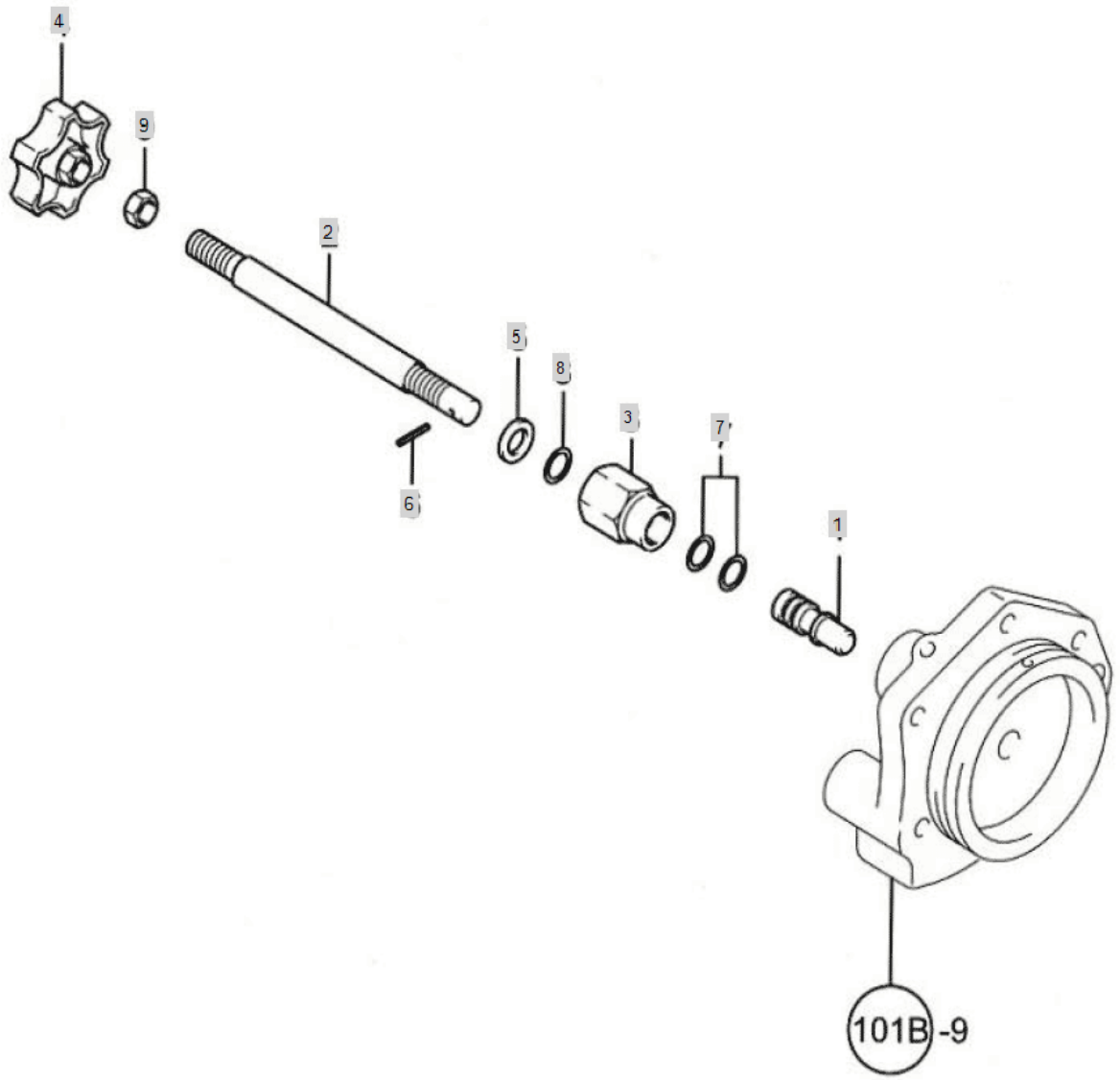

FIG S109 4720	3 POINT LIFT STOP VALVE	Year/Month 2020/02

KeyNo.	Part Number	Part Name	Quantity	Other
1	TTA9010000A4	STOPVALVE	1	
2	TNA9020000A4	BOLT	1	
3	TTA9030000A4	HOLDER	1	
4	TTA9040000A4	KNOB	1	
5	22117-080000	WASHER, PLAIN (Φ 08)	1	
6	22351-040012	PIN, SPRING (4-01)	1	
7	24311-000110	O-RING, DYNAMIC (Φ11)	2	
8	24311-000120	O-RING, DYNAMIC (Φ12)	1	
9	26716-100002	Nut, Hexa (Φ10)	1	

FIG S110 4720	3 POINT LIFT SAFETY VALVE	Year/Month 2020/02

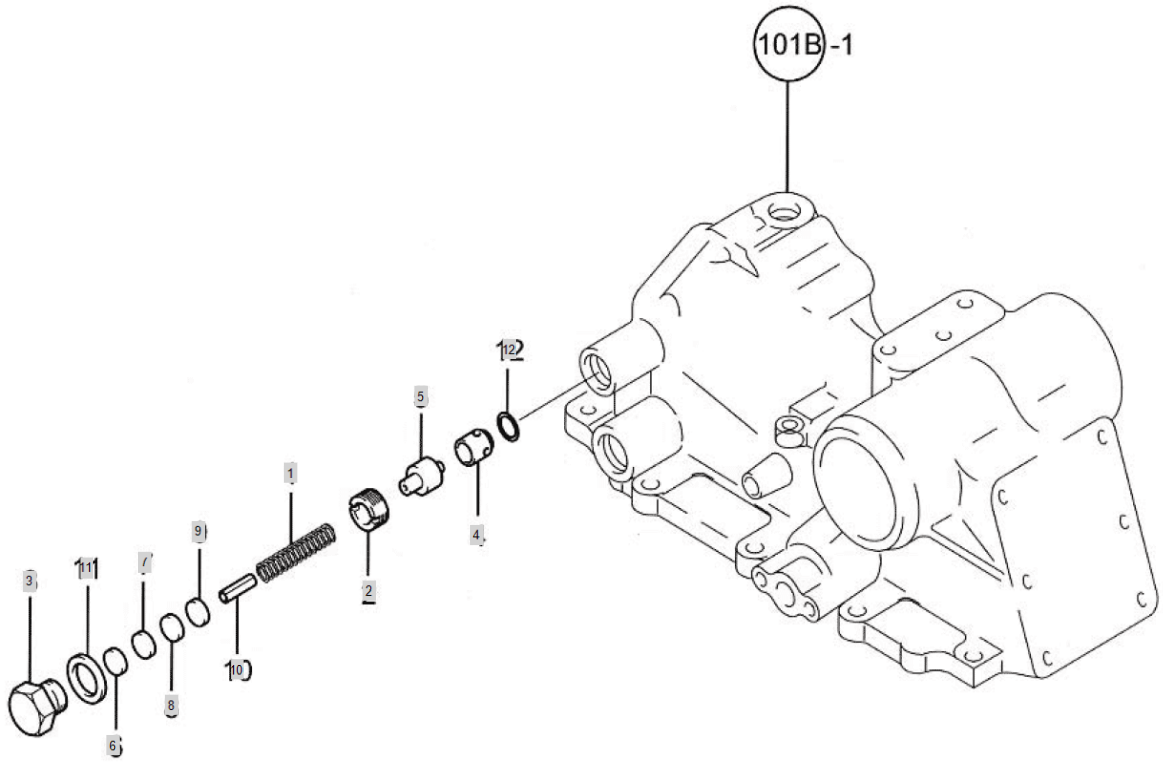

FIG S110 4720	3 POINT LIFT SAFETY VALVE	Year/Month 2020/02

KeyNo.	Part Number	Part Name	Quantity	Other
1	TTB0010000A4	SPRING,RELIEFVALVE	1	
2	TTB0020000A4	SCREW,VALVESEAT	1	
3	TTB0030000A4	PLUG,RELIEFVALVE	1	
4	TTB0040000A4	SEAT,SAFETYVALVE	1	
5	TTB0050000A4	POPPET,SAFETYVALVE	1	
6	TB36670000A4	SHIM	2	
7	TB36680000A4	SHIM	2	
8	TB36690000A4	SHIM	2	
9	TB36700000A4	SHIM	3	
10	22351-060025	PIN, SPRING (6-25)	1	
11	24311-000180	O-RING, DYNAMIC (Φ18)	1	
12	24311-000120	O-RING, DYNAMIC (Φ12)	1	

FIG S111-2 4720	HYDRAULIC CONTROL - 20 SERIES	Year/Month 2020/02

POSITION & DRAFT TYPE

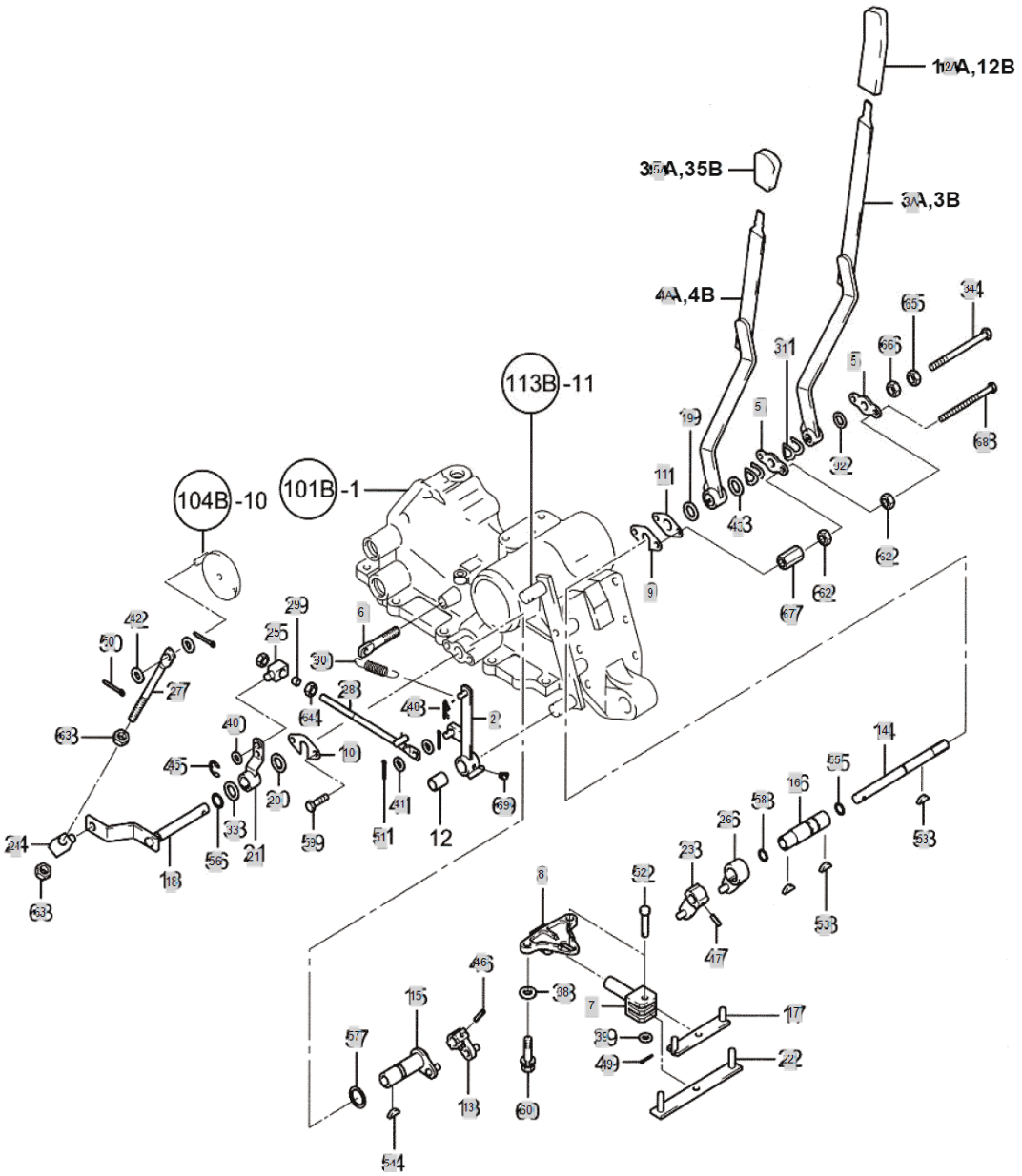

FIG S111-2 4720	HYDRAULIC CONTROL - 20 SERIES	Year/Month 2020/02

KeyNo.	Part Number	Part Name	Quantity	Other
1	TTB1010000A4	BUSH	1	
2	TTB1020000A3	SPRINGPIN6*25	1	
3A	NTB1030000A3	LEVER,CONTROL	1	
4A	NTB1040000A3	LEVER, D-CONTROL	1	
5	TTB1050000A4	PLATE	2	
6	TTB1060000A4	BRAKETSPRING	1	
7	TTB1070000A4	RODCONTRDL	1	
8	TTB1080000A3	PLATECONTRDL	1	
9	TTB1090000A4	PLATEA	1	
10	TTB1090000A4	PLATEA	1	
11	TTB1110000A4	PLATEB	1	
12A	TTB1120000A4	KNOB	1	
13	TTB1130000A4	ARM(PCF)	1	
14	TTB1140000A4	ADJUSTER	1	
15	TTB1150000A4	ARMDRAFTCONTROL	1	
16	TTB1160000A4	SHAFT,DRAFTCONTROL	1	
17	TTB1170000A4	BAR,DRAFTCONTROL	1	
18	TTB1180000A3	ARMPOSTIONCONTROL	1	
19	TTB1190000A4	PLATE	1	
20	TTB1190000A4	PLATE	1	
21	TTB1210000A4	ARM,DRAFTCONTROL	1	
22	TTB1220000A4	BARDRAFTCONTROL	1	
23	TTB1230000A4	ARM,POSITIONCONTROL	1	
24	TTB1240000A4	ADJUSTER	1	
25	TTB1240000A4	ADJUSTER	1	
26	TTB1260000A4	ARM,DRAFTCONTROL	1	
27	TTB1270000C3		1	
28	TTB1280000A4	ROD,DRAFTFEEDBACK	1	
29	TTB1290000A4	COLLAR	1	
30	TTB1300000A4	SPRING,RETURN	1	
31	TT01140000A4	SPRINGWASHER	4	
32	TTB1320000A4	PLATE,FRICTION	1	
33	TTB1320000A4	PLATE,FRICTION	1	
34	26116-080804	HEXAGONBOLT	1	
35A	TT29260000A4	KNOB	1	
38	22137-080000	WASHER, PLAIN (Φ 08)	2	
39	22137-080000	WASHER, PLAIN (Φ 08)	1	
40	22137-100000	WASHER, PLAIN (Φ 10)	2	
41	22137-100000	WASHER, PLAIN (Φ 10)	1	
42	22137-100000	WASHER, PLAIN (Φ 10)	3	
43	22137-120000	WASHER, PLAIN (Φ 12)	1	
45	22272-000070	RING, CIRCLIP (Φ 07)	2	
46	22351-050032	PIN, SPRING (5-03)	1	
47	22351-050032	PIN, SPRING (5-03)	1	
48	22360-080000	PIN , SNAP (8Φ)	1	

FIG S111-2 4720	HYDRAULIC CONTROL - 20 SERIES	Year/Month 2020/02

KeyNo.	Part Number	Part Name	Quantity	Other
49	22417-200200	PIN , COTTER (2-20)	1	
50	22417-300200	PIN , COTTER (3-20)	2	
51	22417-300200	PIN , COTTER (3-20)	2	
52	22487-080350	PIN, HEAD (08-35)	1	
53	22522-030130	KEY, WOODRUFF (03-13)	1	
54	22522-030130	KEY, WOODRUFF (03-13)	1	
55	24311-000090	O-RING, DYNAMIC (Φ9)	1	
56	24311-000090	O-RING, DYNAMIC (Φ9)	1	
57	24311-000160	O-RING, DYNAMIC (Φ16)	1	
58	24311-000160	O-RING, DYNAMIC (Φ16)	1	
59	26013-080162	Bolt, Hexa (8-16)	2	
60	26013-080202	Bolt, Hexa (8-20)	2	
62	26716-080002	NUT,HEX (D8)	3	
63	26716-100002	Nut, Hexa (Φ10)	2	
64	26716-100002	Nut, Hexa (Φ10)	2	
65	26716-120002	BOLT,CYLINDER HEAD(B)	1	
66	26756-120002	LOCKNUTM12PLATED	1	
67	TTB1670000A4	NUT	1	
68	26116-080804	HEXAGONBOLT	1	
69	24764-060000	GREASE NIPPLE	1	

FIG S113 4720	DRAFT CONTROL	Year/Month 2020/02

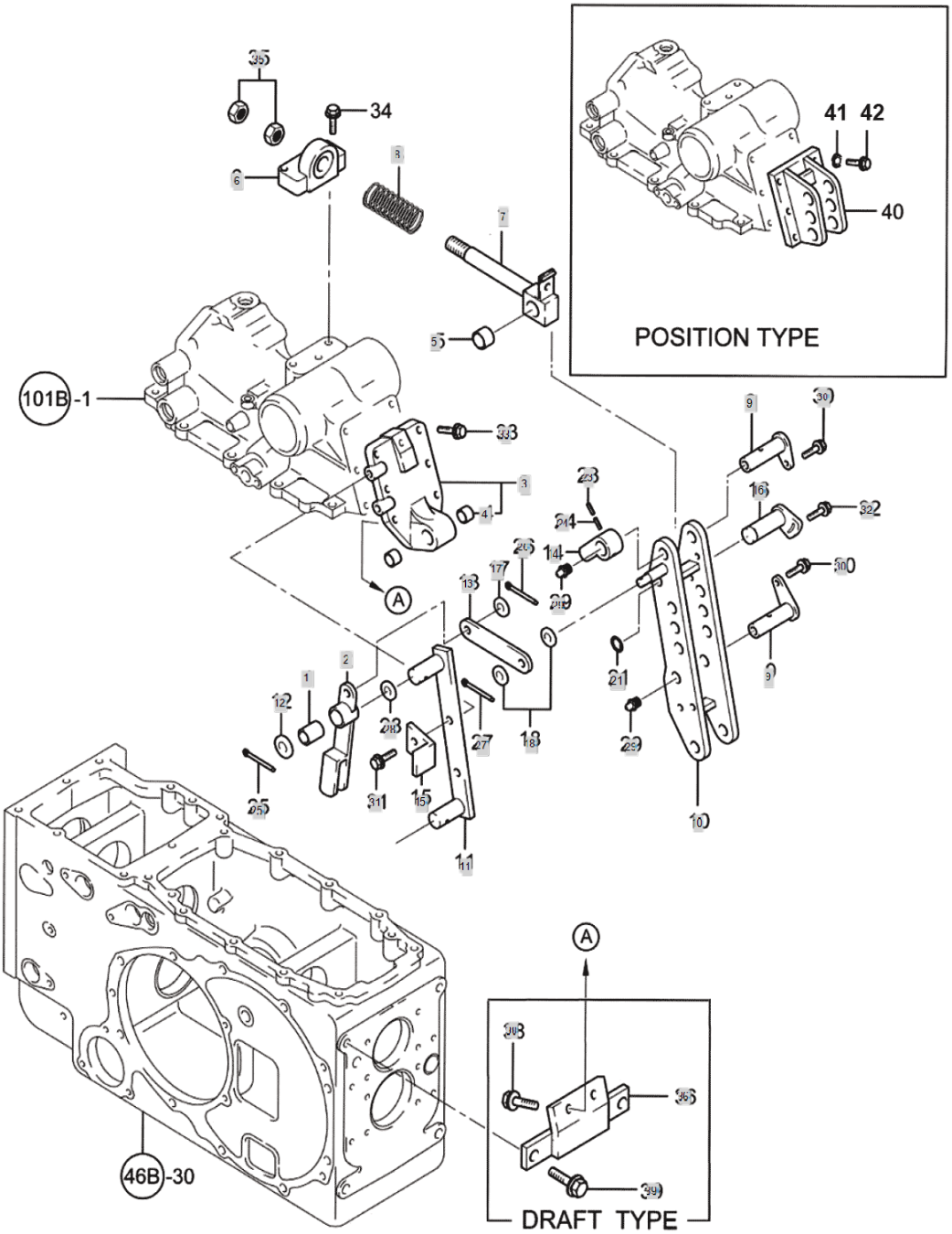

FIG S113 4720	DRAFT CONTROL	Year/Month 2020/02

KeyNo.	Part Number	Part Name	Quantity	Other
1	TTB1010000A4	BUSH	1	
2	TTB3020000A3	LINKDF	1	
3	TTB3030000A4	HINGE.D.ASS`Y,SUPPORT	1	
4	TT67120000A4	BUSH	1	
5	TT67120000A4	BUSH	1	
6	TTB3060000A3	HOLDER,SENSORSPRING	1	
7	TNB3070000A3	BOLTSENSOR	1	
8	TTB3080000B4	SENSORSPRING	1	
9	TTB3090000A4	PIN,HINGE	2	
10	TZB3100000C2	TOP LINK HINGE	1	
11	TTB3110000A4	PLATE	1	
12	TTB3120000A4	SPACER	2	
13	TTB3130000A4	PLATELINK	1	
14	TTB3140000A4	CAMDRAFTRID	1	
15	TTB3150000A4	STOPPERDRAFTLINK	1	
16	TTB3160000A4	SHAFTLOCK	1	
17	22137-100000	WASHER, PLAIN (Φ 10)	1	
18	22137-100000	WASHER, PLAIN (Φ 10)	2	
21	22272-000150	RING, CIRCLIP (Φ 15)	1	
22	22312-100180	PIN, DOWEL (10-18)	1	
23	22351-035032	PIN, SPRING (3.5-32)	1	
24	22351-060032	PIN, SPRING (6-32)	1	
25	22417-250250	PIN , COTTER (2-25)	2	
26	22417-300200	PIN , COTTER (3-20)	1	
27	22417-300200	PIN , COTTER (3-20)	1	
28	23414-160000	WASHER,SEALING	2	
29	TA27160000A4	GREASE NIPPLE	2	
30	26013-080162	Bolt, Hexa (8-16)	2	
31	26013-080292	BOLT W/WASHER	1	
32	26014-080202	Bolt, Hexa (8-20)	1	
33	26450-120352	BOLT	4	
34A	26013-120382	BOLT,W/SW	2	
35	26716-160002	NUT	2	
36	TNB3360000A3	STAYHINGE	1	
38	26013-120302	HEX BOLT W/WASHER	4	
39	26116-120502	BOLT	2	

FIG S114 4720	HYDRAULIC PIPES	Year/Month 2020/02

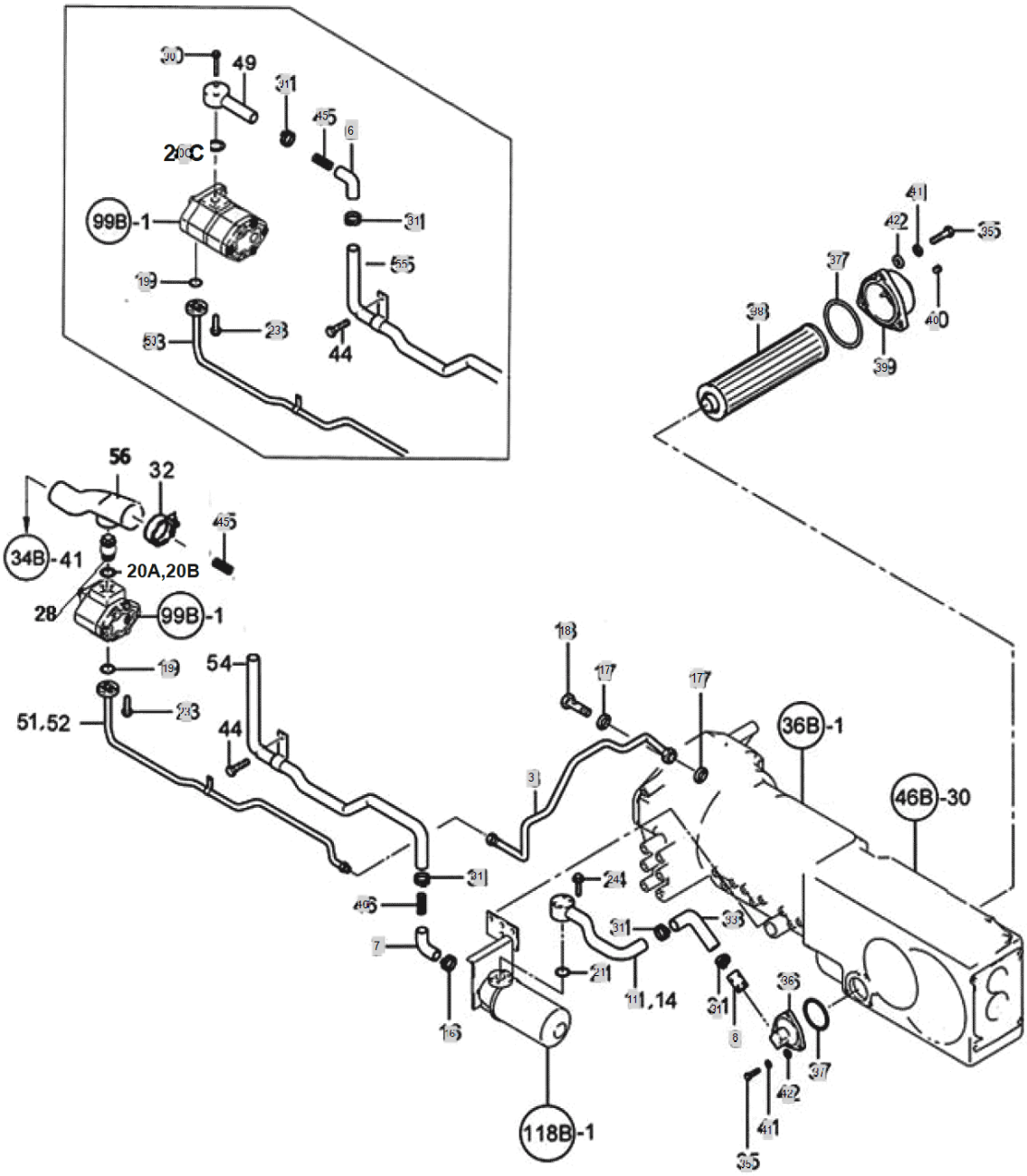

FIG S114 4720	HYDRAULIC PIPES	Year/Month 2020/02

KeyNo.	Part Number	Part Name	Quantity	Other
3	NTB4030000C1	LINE,PRESSURE	1	
6	TTB4060000B4	HOSEA	1	
7	NTB4070000B4	HOSE,LOWPRESSURE	1	
8	TNB4080000A4	PIPE,CONNECTING	1	
11	NTB411H000A2	PIPEFLANGE,LO-PERSS	1	
16	23010-044000	HOSEBAND	1	
17	23414-200026	WASHER, PLAIN (Φ 20)	2	
18	TTB4180000A4	BOLT	1	
19	24311-000200	O-RING, DYNAMIC (Φ20)	1	
20C	24341-000260	O-RING, FIX (Φ26)	1	
21	24321-000260	O-RING	1	
23	26106-060252	Screw, (6-25)	4	
24	26106-060502	FLANGEBOLT	4	
30	26013-080502	Bolt, Hexa (8-50)	2	
31	NTB4310000A4	HOSEBAND	5	
33	TNB4330000A4	HOSEC,LOWPRESS.	2	
35	26116-080262		6	
36	TNB4360000A3	COVERRHSTRAINER	1	
37	24321-000860	SUB TO-> 24321-000850	2	
38	TNB4380000A3	HYDSTRAINER	1	
39	TB38300000A3	SCREENCOVER(L)	1	
40	TB38330000A4	TAPERFLUG	1	
41	22217-080000	WASHER, SPRING (Φ 08)	6	
42	22137-080000	WASHER, PLAIN (Φ 08)	6	
45	TTB4360000A4	SPRINGA	1	
46	TTB4370000A4	SPRINGB	1	
53	NTB4530000B2	PIPE(FRONT)	1	
55	NTB4550000A2	PIPE,LOWPRESSURE	1	

FIG S118 4720	HYDRAULIC FILTER	Year/Month 2020/02

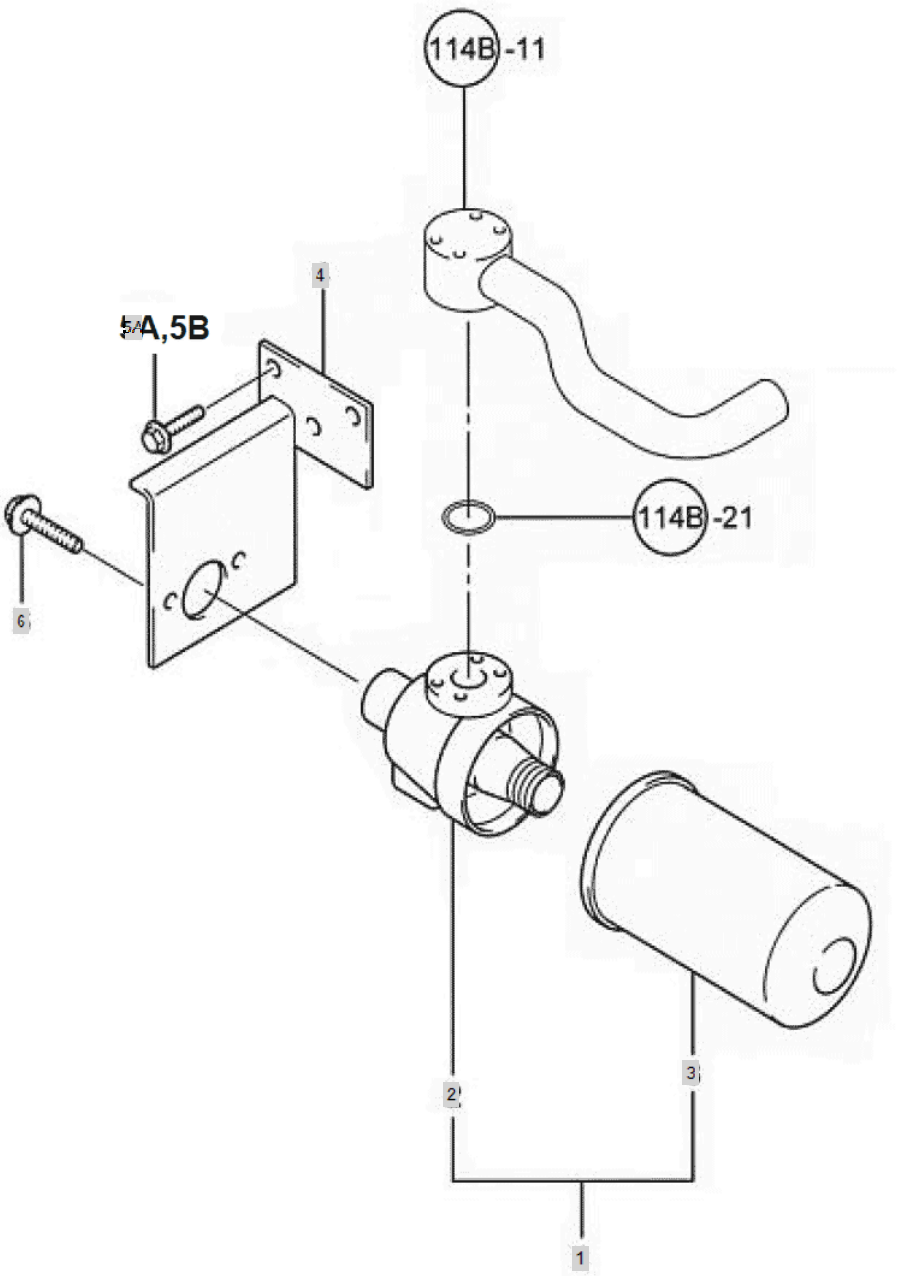

FIG S118 4720	HYDRAULIC FILTER	Year/Month 2020/02

KeyNo.	Part Number	Part Name	Quantity	Other
1	NTB8010000A3	HYD.FILTERASSY	1	
2	TTB8020000A3	COVER,FILTER ASSY	1	
3	NTB8030000B3	FILTER, HYDRAULIC OIL (10/20 SERIES)	1	
4	NTB8040000A3	FILLTERBRACKET	1	
5A	26106-080162	SCREW,HEXFLANGEHEADCAP	3	
6	26106-080162	SCREW,HEXFLANGEHEADCAP	2	

FIG S119 4720	WIRING HARNESS	Year/Month 2020/02

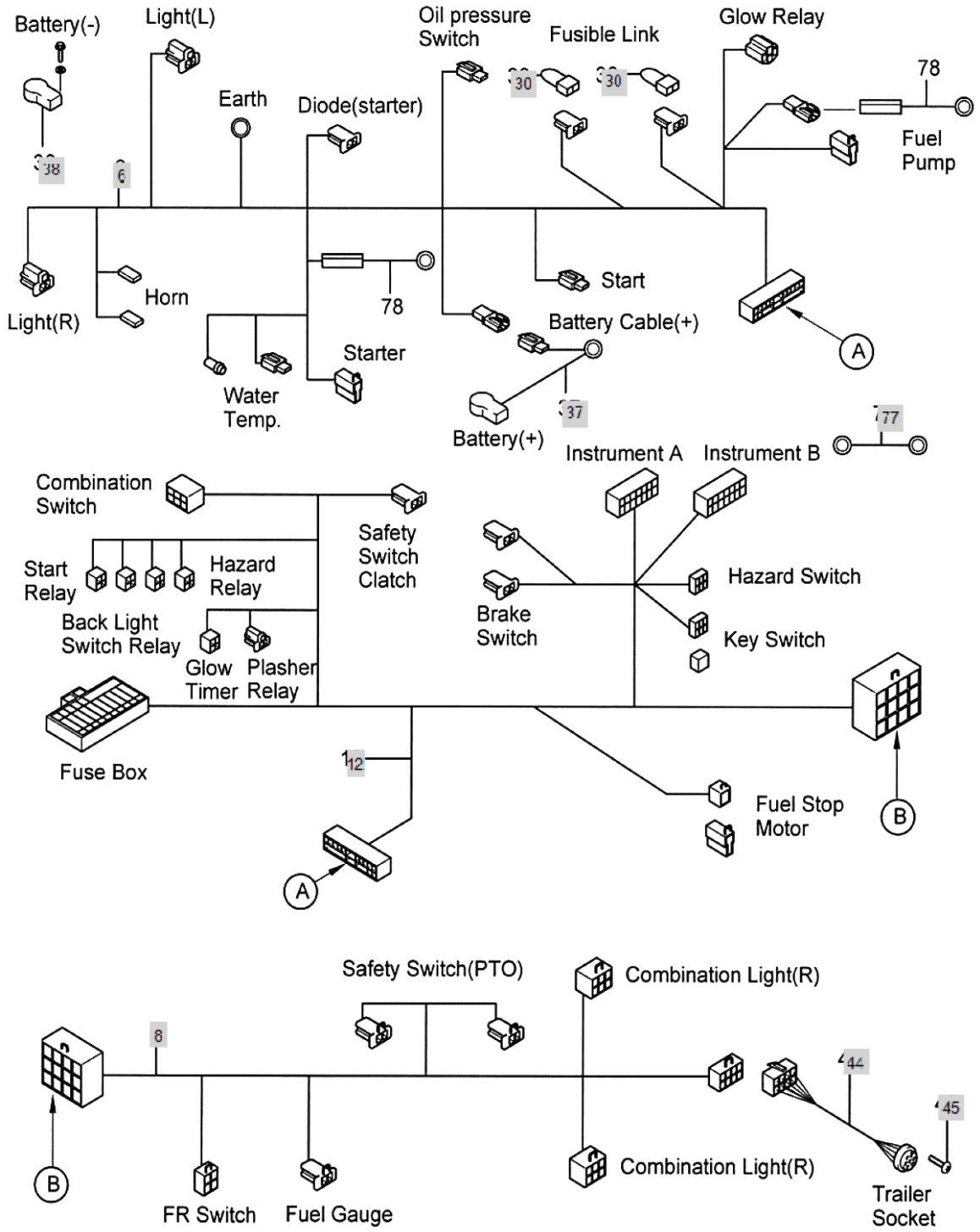

FIG S119 4720	WIRING HARNESS	Year/Month 2020/02

KeyNo.	Part Number	Part Name	Quantity	Other
5	26716-060002	HEX NUT (Φ6)	4	
6	NTB9640000B2	WIREHARNESS(A)	1	
8	NTB9650000A2	WIREHARNESS[B]	1	
9	NTB9090000A3	WIREHARNESSC	1	
10	NTB9100000A3	WIREHARNESSD	1	
12	NTB9520000C1	ELE'C WIRING	1	
13	TNB9130000A3	BOX.FUSE	1	
14	TTB9140000A9	FUSE5A	3	
15	TTB9150000A9	FUSE10A	4	
16	TTB9160000A9	FUSE15A	5	
30	CEH3160000A4	FUSIBLE LINK 0.85	2	
35	NTG1310000A3	GLOWTIMER	1	
36	HRB1801002A2	Q.G.S CONTROLLER	1	
37	NTB9470000A3	BATTERY CABLE(+)	1	
38	TTB9380000A4	BATTERYCABLE(-)	1	
39	TB39260000A4	BAND	6	
42	TTB9420000A4	Band, Wire (250mm)	17	
43	CEH3370000A4	NYLON BAND 350	1	
44	TZB9440000A3	TRAILERSOCKET	1	
45	26557-060352	SCREW,+GROOVE	3	
49	TTB9490000A4	TAPPINGSCREW	4	
51	22137-060000	WASHER , PLAIN	1	
53	26106-060122	HEX BOLT (6-12)	3	
54	26106-060162	HEXFLANGEBOLT	4	
58	NTB9580000A4	HARNESS	1	
64	TTB9640000A4	RUBBERCOVER	1	
65	26347-060002	NUT6	1	
66	26106-060162	HEXFLANGEBOLT	1	
71	22217-060000	WASHER, SPRING (Φ 06)	4	
77	NTB9530000A3	접지선	1	
79	26716-050002	Nut, Hexa (Φ5)	1	

FIG S124 4720	BATTERY & HORN	Year/Month 2020/02

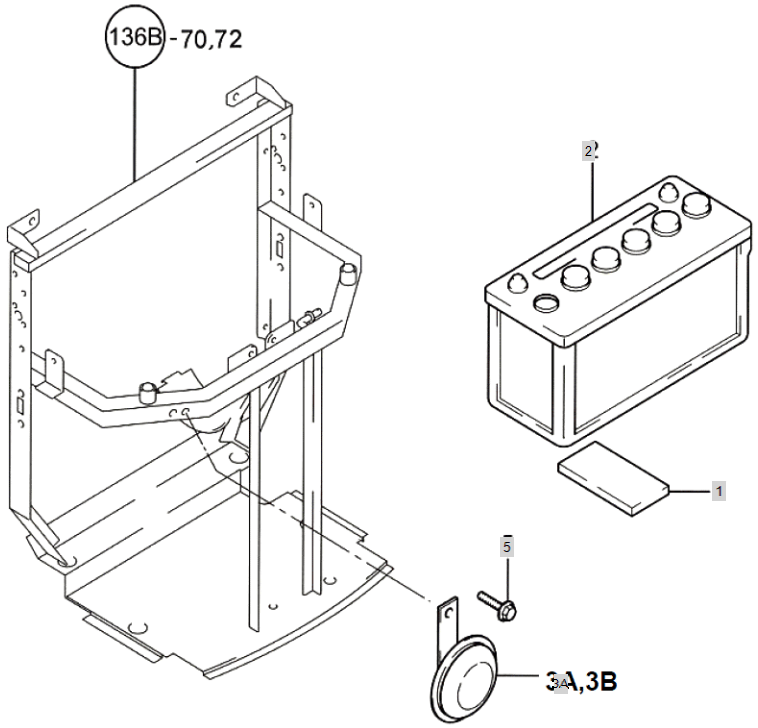

TTD1030000B3 (3A)

THIS PART HAS TWO SEPARATE WIRE TERMINAL POST

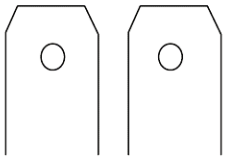

TTD1040000B3 (3B)

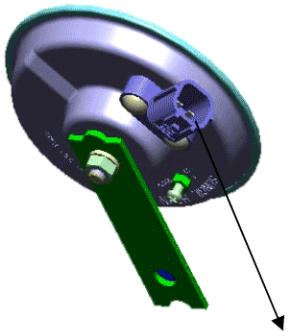

NEW STYLE PLUG IN CONNECTOR

FIG S124 4720	BATTERY & HORN	Year/Month 2020/02

KeyNo.	Part Number	Part Name	Quantity	Other
1	TTC4010000A4	TANKRUBBER,DUSTPROOF	2	
2	NTC4020000A1	BATTERYASS`Y	1	
3A	TTD1030000B3	HORN	1	
5	26106-080122	Bolt, Hexa (8-12)	1	

FIG S125-A 4720	SWITCH EARLY VERSION	Year/Month 2020/02

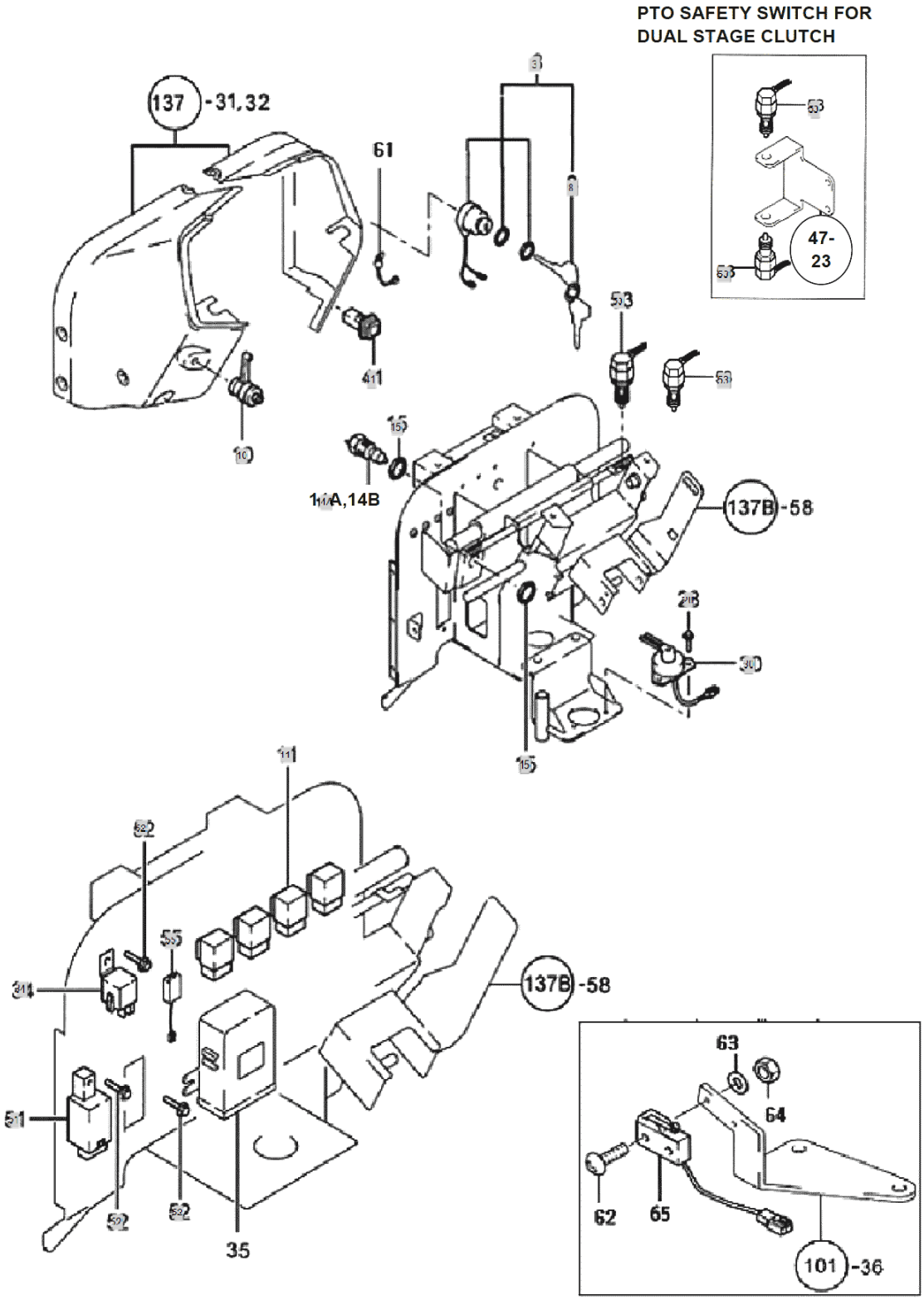

FIG S125-A 4720	SWITCH EARLY VERSION	Year/Month 2020/02

KeyNo.	Part Number	Part Name	Quantity	Other
3	TTC5030000B3	STARTERSWITCHASS'Y	1	
5	TTC5050000A9	RINGNUT	1	
8	TTC5070000A9	IGNITION KEY	1	
10	CBF3010000A2	COMBINATION S/W	1	
11	CBF6030000A4	RELAYCA-1A	4	
14A	TZC5140000A3	SAFETY S/W, START	1	
15	TTC5150011A4	NUT	2	
28	26160-060122	BOLT, HEX FLANGE	2	
30	TCD9110000A2	SWITCHA'SSY	1	
34	FTB9160000A3	GLOW RELAY (12V-70A)	2	
41	FTC5340000A3	EMERGENCY LAMP SWITCH	1	
51	NTC5510000A3	FLASH RELAY	1	
52	26160-060162	HEX FLANGE BOLT	4	
53	TZC5110000A3	STOPLAMPSWITCH	4	
55	CT04050000A2		1	

FIG S132 4720	LAMP	Year/Month 2020/02

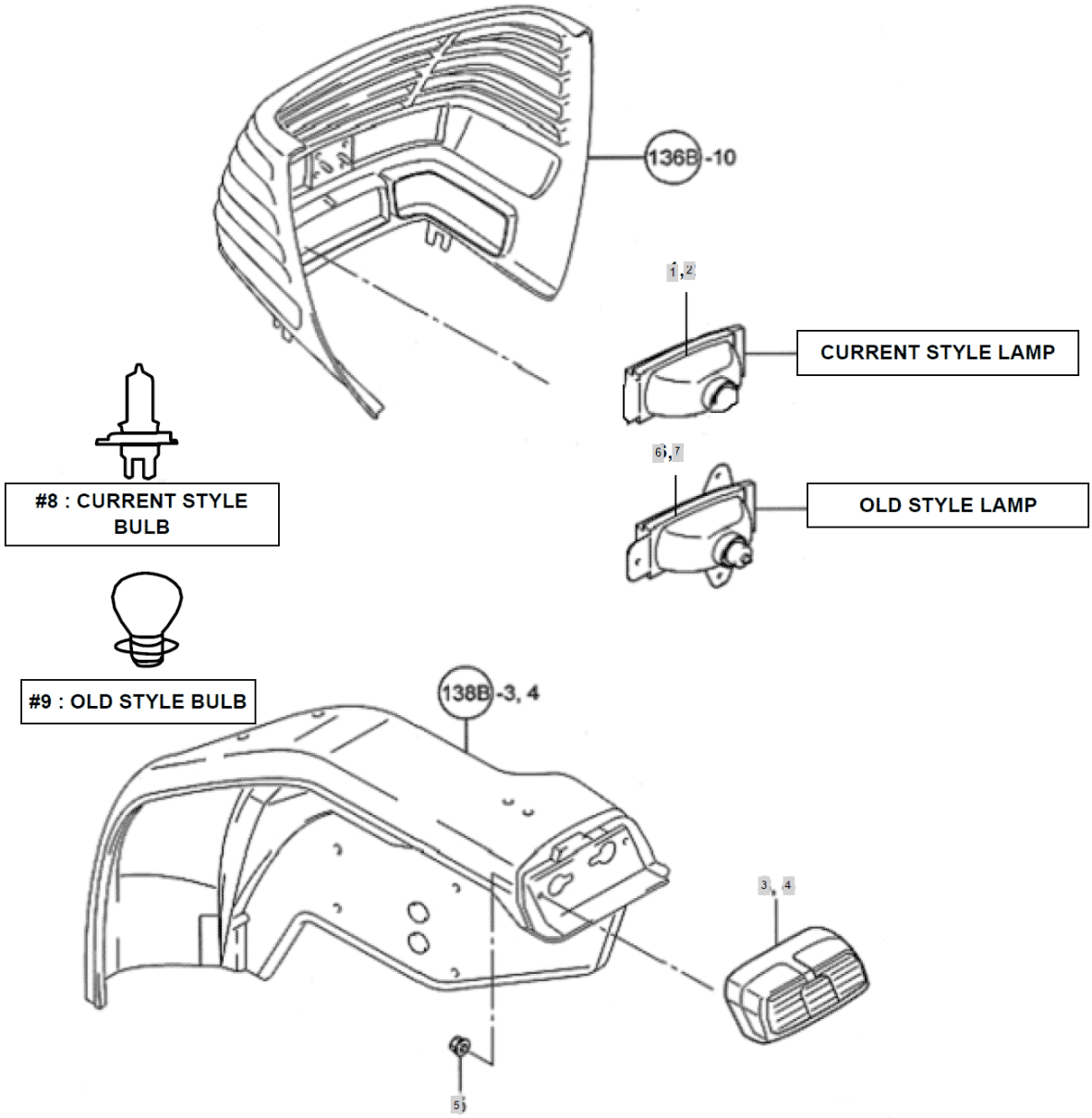

FIG S132 4720	LAMP	Year/Month 2020/02

KeyNo.	Part Number	Part Name	Quantity	Other
1	NTD201E000A3	HEADLIGHT,RH,NEWSTYLE	1	
2	NTD202E000A3	HEAD,LAMPLH	1	
8	NTD201E020A4	BULB 12V/55W -> HA00000510A	2	
3	NTD2160000A3	COMBINATIONLAMP(L)	1	
4	NTD2170000A3	COMBINATIONLAMP(R)	1	
5	26367-060002	Nut, Hexa (Φ6)	4	
6	TCE1030000A3	HEADLAMP (LH)	1	
7	TCE1090000A3	HEADLAMP (RH)	1	
9	TCE1090100A4	BULB	2	

FIG S132A 4720	FOOT REST - EARLY VERSION	Year/Month 2020/02

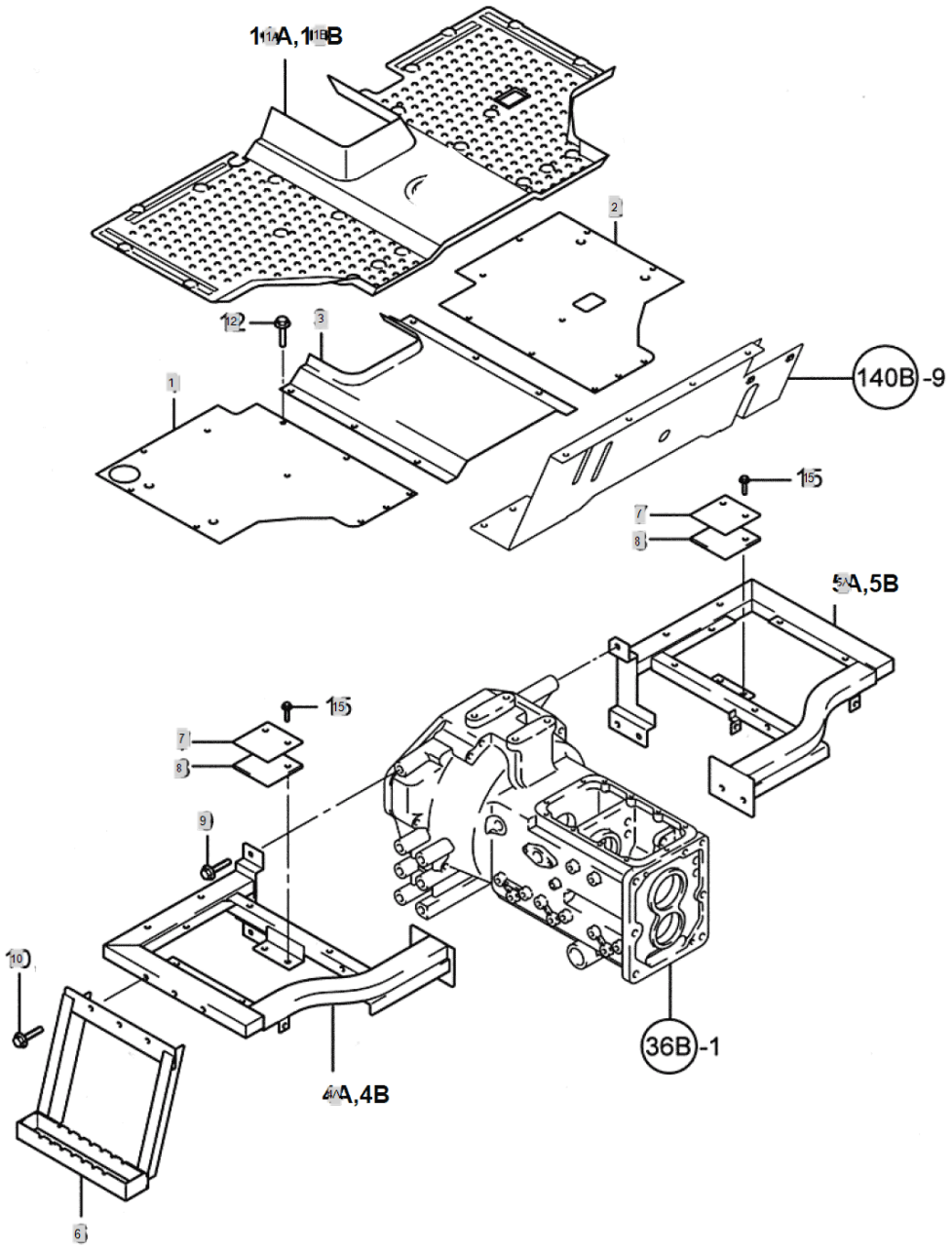

FIG S132A 4720	FOOT REST - EARLY VERSION	Year/Month 2020/02

KeyNo.	Part Number	Part Name	Quantity	Other
1	NTD9010000E2	FOOT REST(L)	1	
2	NTD902K000D2	FOOT REST(R)	1	
3	NTD9060000A2	FOOTREST(M)	1	
4A	NTD9040000C1		1	
5A	NTD9050000C1		1	
6	NTD9130000C2	SUB STEP -> NTD9130000D2	2	
7	NTD9420000A4	SETUPPLATE(UP),FUELTANK	2	
8	NTD9430000A4	FUELTANKURETHAN	2	
9	26106-100202	HEX BOLT, (10-20)	10	
10	26106-080652	SCREW,HEXFLANGEHEADCAP	6	
11A	NTD9090000D1	FOOTBOART CUSHION RUBBER	1	
11B	NTD9090000D1	FOOTBOART CUSHION RUBBER	1	
12	26106-080122	Bolt, Hexa (8-12)	20	
15	26106-080162	SCREW,HEXFLANGEHEADCAP	4	

FIG S134 4720	METER ASS'Y	Year/Month 2020/02

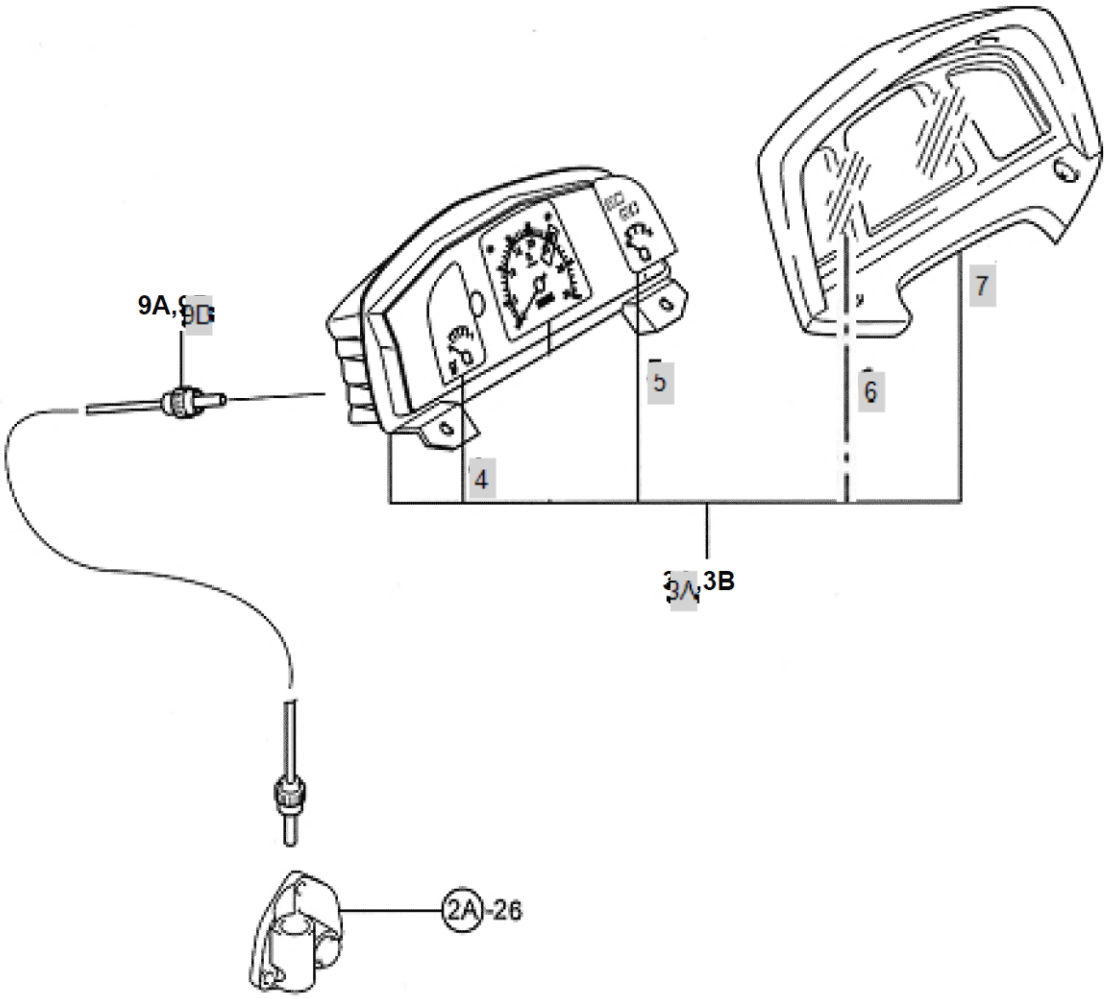

FIG S134 4720	METER ASS'Y	Year/Month 2020/02

KeyNo.	Part Number	Part Name	Quantity	Other
3A	NTD4010000A2	METERASS`Y	1	
4	NTD4010600A9	FUEL MOVEMENT	1	
5	NTD4011300A9	TEMP MOVEMENT	1	
6	NTD4010300A9	GLASS INSERT, DASH METER (N/A)	1	
7	NTD4010010A2	SUB TO ->NTD4010010A DASH FLANGE METER	1	
9B	TCE3210000A3	CABLE,HOUBMETER	1	

FIG S136 4720	HOOD & SIDE PANEL	Year/Month 2020/02

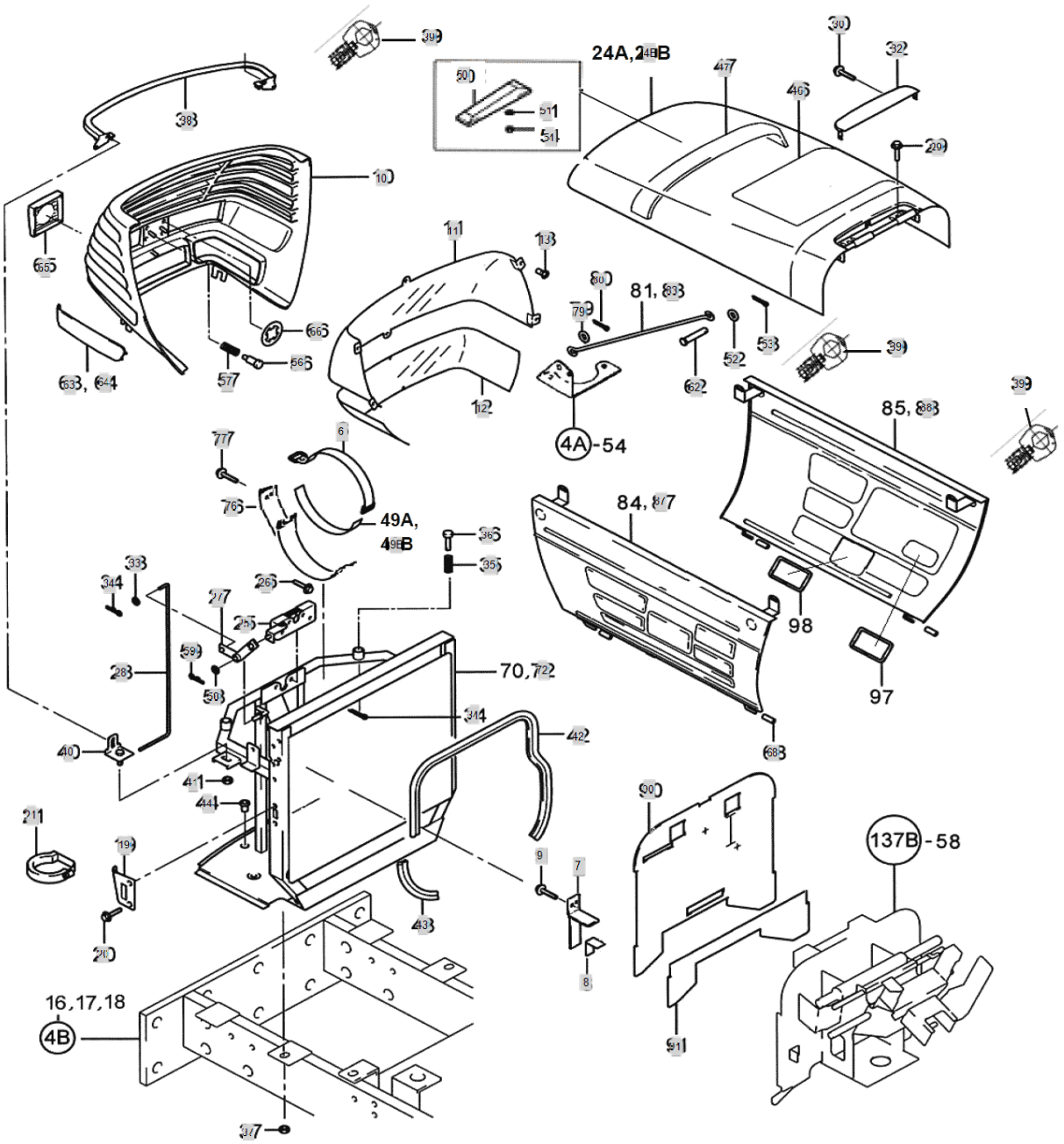

FIG S136 4720	HOOD & SIDE PANEL	Year/Month 2020/02

KeyNo.	Part Number	Part Name	Quantity	Other
6	TZD6890000A4	BAND,AIRCLEANERHOLDING	1	
7	NTD6070000A4	FIXINGBRACKET,BATTERY	1	
8	NTD6080000A4	FIXING RUBBER, BATTERY	1	
9	26106-080162	SCREW,HEXFLANGEHEADCAP	2	
10	NTD610E000A9	FRONT MASK ASSY	1	
11	NTD6100500A3	MESH PLATE (UPPER)	1	
12	NTD6100600A3	MESH PLATE (LOWER)	1	
13	TTD7090000A4	CROSSRECESSEDHEADTAPPINGSCREW	14	
19	NTD6190000B4	SUBTANK STAY ASSY	1	
20	26106-080202	SQR FLANGE BOLT	2	
21	CA09310000A4	STRAP,SUBTANKMTG	1	
24B	NTD624H000A0	BONNET ASSY,20SERIES	1	
25	NTD6560000B3	LOCK UNIT, HOOD	1	
26	26106-060302	Bolt, Hexa (6-30)	2	
27	NTD6580000A4	HINGEBRACKETASS`Y	1	
28	NTD6590000A4	PRESSBAR	1	
29	26106-080162	SCREW,HEXFLANGEHEADCAP	3	
30	26106-060122	HEX BOLT (6-12)	3	
32	NTD6300000B2	BONNETCOVER	1	
33	22137-060000	WASHER , PLAIN	1	
34	22372-060000	PIN , SNAP (06Φ)	1	
35	NTD6420000A4	CUSHION, SPRING	2	
36	NTD6430000A4	PIN,BONNETCUSION	2	
37	26367-080002	HEX FLANGE NUT (Φ8)	4	
38	NTD6110000A3	FRONTMASKHOLDER	1	
39	TC53110000A4	CAMLOCK	6	
40	NTD6410000B4	FIXINGBRACKET	2	
41	26367-060002	Nut, Hexa (Φ6)	2	
42	NTD6610000A4	STRIP	1	
43	NTD6620000A4	STRIPB	1	
44	TCE7100000A4	GUIDE	1	
46	TZD6870000A4	INSULATOR,BONNET	1	
47	NTD6630000A4	BONNETURETHANE	1	
49B	FTD6970000A4	AIR CLEAN PAD	2	
50	TCF8100000A4	TOPMARK	1	
51	TTD6440000A4	CUSHION, RUBBER	2	
52	22137-100000	WASHER, PLAIN (Φ 10)	1	
53	22417-200300	PIN , COTTER (2-30)	1	
54	TB41290000A4	NUT	2	
56	TCE1250000A4	BOLTM5	6	
57	TCE1080000A4	SPRING1.2	6	
58	22137-080000	WASHER, PLAIN (Φ 08)	2	
59	22360-080000	PIN , SNAP (8Φ)	1	
61	26367-060002	Nut, Hexa (Φ6)	2	
62	22487-100240	PIN, HEAD (10-24)	1	

FIG S136 4720	HOOD & SIDE PANEL	Year/Month 2020/02

KeyNo.	Part Number	Part Name	Quantity	Other
63	NTD610E020A3	SIDE LENS, RH	1	
64	NTD610E030A3	SIDE LENS, LH	1	
65	NTD610E040A3	CENTERLENS	1	
66	TC53150000A4	SPEEDNUT5	4	
68	TC53130000A4	CUSHION, RUBBER	4	
72	NTD6720000B0	BATTERYBRACKETASS'Y	1	
76	NTD6760000A3	BRACKET, AIR-CLEANER	1	
77	26106-080142	SCREW,HEXFLANGEHEADCAP	2	
79	22117-080000	WASHER, PLAIN (Φ 08)	1	
80	22417-250250	PIN , COTTER (2-25)	1	
83	NTD6830000A3	BONNETSTANDASSY	1	
87	NTD6870000B0	SIDE COVER ASSY,LH	1	
88	NTD6880000B0	SIDE COVER ASSY, R	1	
90	NTD6900000B2	Heatinsulator	1	
91	NTD6910000A2	SUB TO ->NTD6910000A3 INSULATOR NOISE	1	
99	NTD6990000A4	MOLD(SIDE COVER)	1	

FIG S137-A 4720	DASH BOARD EARLY VERSION	Year/Month 2020/02

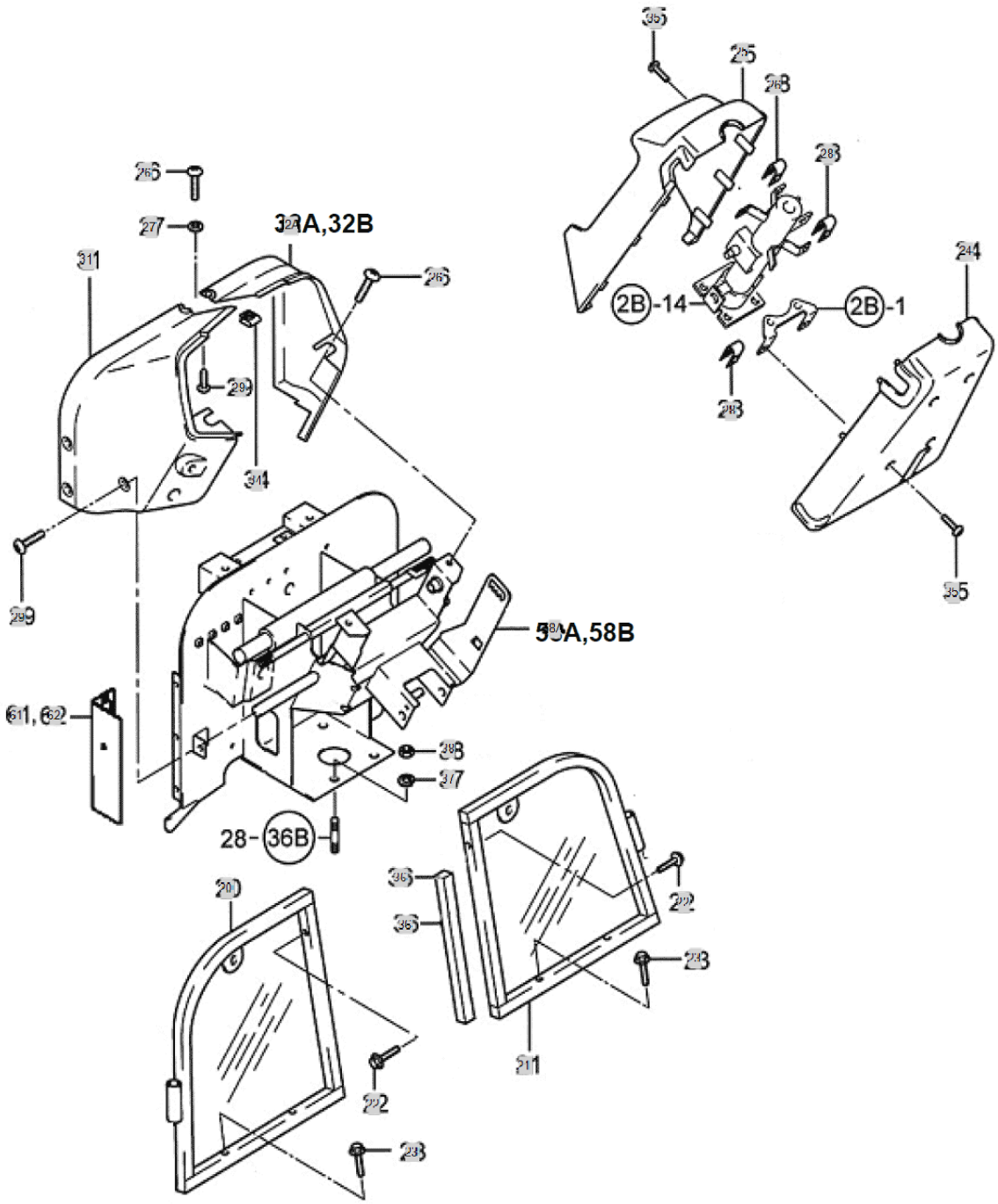

FIG S137-A 4720	DASH BOARD EARLY VERSION	Year/Month 2020/02

KeyNo.	Part Number	Part Name	Quantity	Other
20	NTD725E000B2	COINDPROTECTION(L)ASSY	1	
21	NTD726E000B2	PLATE(R)ASSY	1	
22	26106-080302	HEX BOLT, FLANGE	2	
23	26106-080452	HEX FLANGE BOLT 8X45	4	
24	TCE9060000A1	COLUMN COVER R	1	
25	TCE9050000A1	COLUMN COVER F	1	
26	TCE9020000A4	BOLT(BC)	3	
27	TCE9130000A4	WASHER	1	
28	TTD7110000A4	SPEEDNUTNS5008	6	
29	TCE9010000A4	BOLT	6	
31	NTD7010000A0	DASHBOARD(L)	1	
32A	NTD7020000A0	DASH BOARD (RH)	1	
34	TCE9150000A4	SPEEDNUTM6	2	
35	TTD7090000A4	CROSSRECESSEDHEADTAPPINGSCREW	8	
36	NTD7360000A4	URETHANE,WINDPROTECTION	2	
37	22217-120000	WASHER, SPRING (Φ 12)	4	
38	26716-120002	BOLT,CYLINDER HEAD(B)	4	
58A	NTD7580000C0	Stay Ass'y, Dashboard	1	
61	NTD7610000A4	B/KL,FUSEBOX	1	
62	NTD7620000A4	COVERR,INSULATOR	1	

FIG S138 4720	FENDER	Year/Month 2020/02

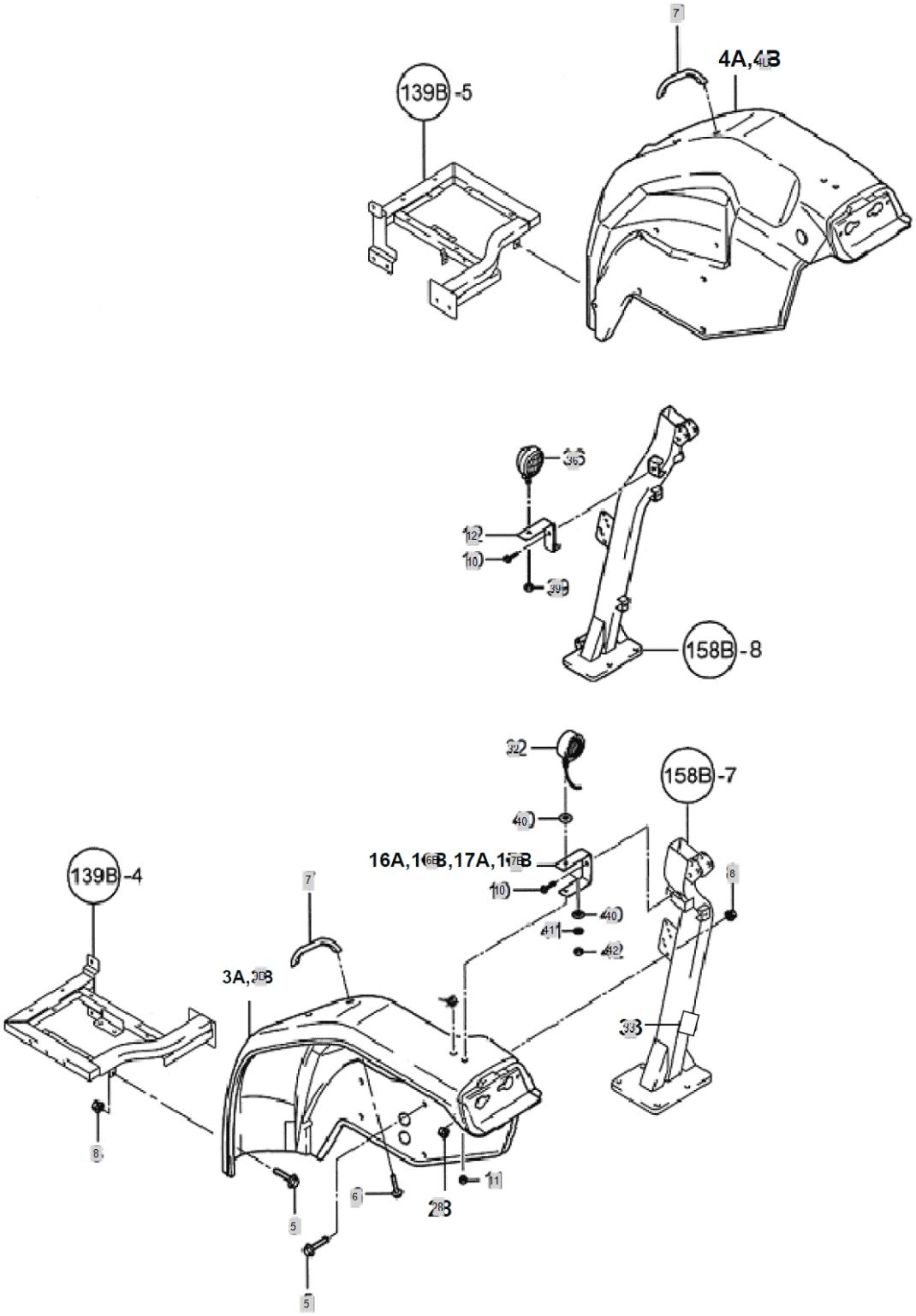

FIG S138 4720	FENDER	Year/Month 2020/02

KeyNo.	Part Number	Part Name	Quantity	Other
3B	NTD803Y000E0	FENDER ASS'Y, L	1	
4B	NTD804Y000E0	FENDER ASS'Y, R	1	
5	26106-080162	SCREW,HEXFLANGEHEADCAP	6	
6	26106-080122	Bolt, Hexa (8-12)	4	
7	NTD8120000A3	FENDERGRIP	2	
8	26367-080002	HEX FLANGE NUT (Φ8)	6	
10	26106-080162	SCREW,HEXFLANGEHEADCAP	6	
11	26367-080002	HEX FLANGE NUT (Φ8)	2	
12	NTD8400000A4	BRACKET	1	
16B	NTD816H000A3	SUPPORT(L),FENDER	1	
17B	NTD817H000A3	SUPPORT(R),FENDER	1	
28	TTB9280000A4	GROMMET25/18	2	
32	TZD2120000C3	DIRECTION LAMP	2	
33	TZD8330000A4	RUBBER,DUSTPROOF	2	
34	TB40280000A4	GROMET 8	2	
35	TTD6650000A4	RUBBER	3	
36	CEG6250000A2	Lamp Ass'y, Working	1	
39	26367-080002	HEX FLANGE NUT (Φ8)	1	
40	22127-120000	WASHER, PLAIN (Φ 12)	4	
41	22217-120000	WASHER, SPRING (Φ 12)	2	
42	26716-120002	BOLT,CYLINDER HEAD(B)	2	

FIG S140 4720	SEAT	Year/Month 2020/02

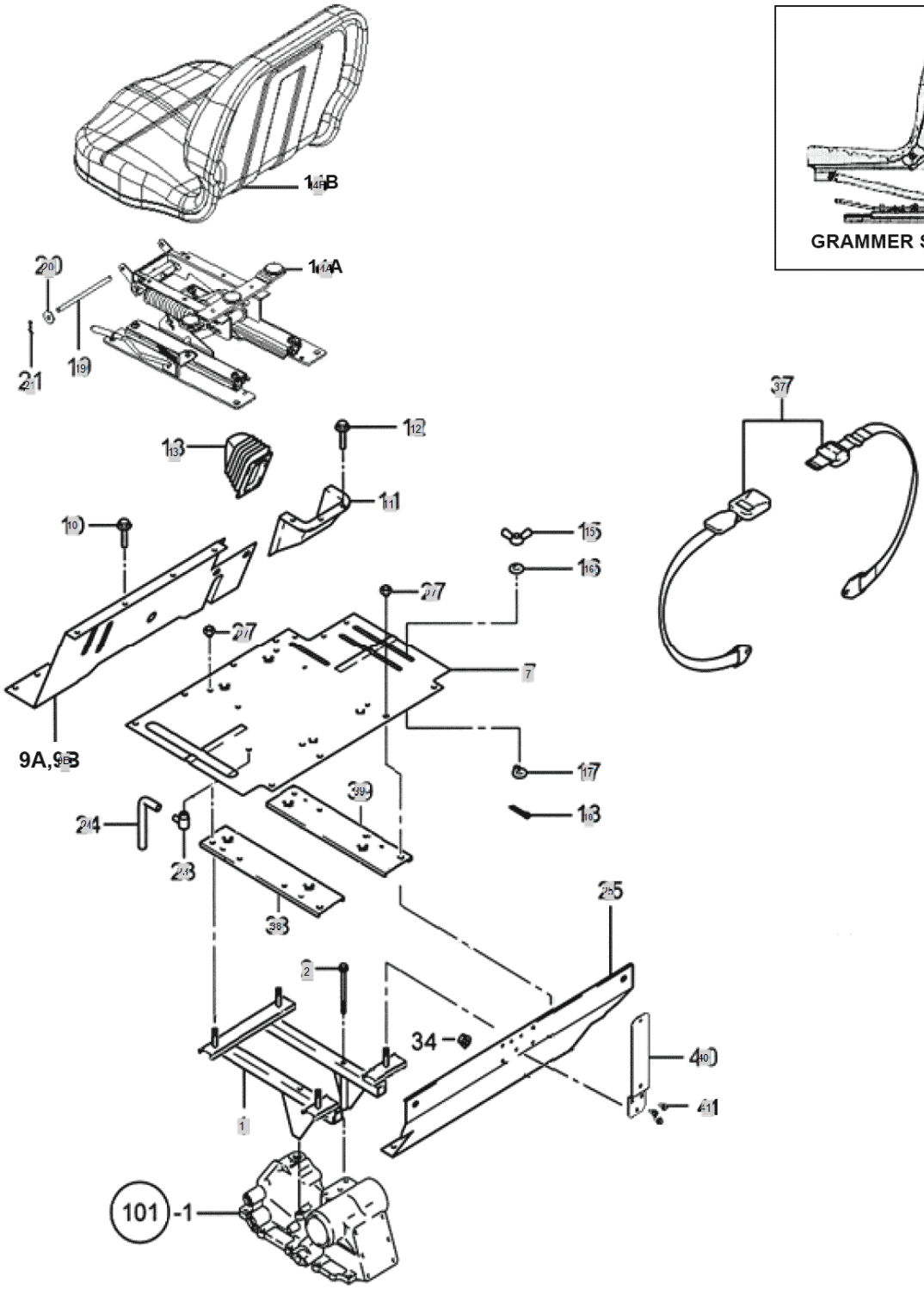

FIG S140 4720	SEAT	Year/Month 2020/02

KeyNo.	Part Number	Part Name	Quantity	Other
1	NTE0010000E2	B/K, SEAT FRAME	1	
2	26106-081352	FLANGBOLT	2	
6	26106-080402	SCREW,HEXFLANGEHEADCAP	2	
7	NTE0240000D2	COVER, SEAT FRAME	1	
9B	NTE017Y000B1	COVERASS'Y,DUST	1	
10	26106-080122	Bolt, Hexa (8-12)	7	
11	NTE0230000A2	LEVERGUIDE,MAINSHIFT	1	
12	26106-060162	HEXFLANGEBOLT	6	
13	NTE0140000A2	BOOTS,MAINSHIFT	1	
14A	NTE0435021A1	SUSPENSIONASS'Y	1	
14B	NTE0435011A1		1	
15	TTE0110000A4	BOLT, BUTTERFLY	2	
16	TTE0120000A9	WASHER	2	
17	TTE0080000A4	STOPPER	2	
18	22417-200200	PIN , COTTER (2-20)	2	
19	TCF5100000A4	PIN.	1	
20	22157-080000	WASHER, PLAIN (Φ 08)	2	
21	RR64050000A4	Pin, Come-Off Snap (Φ8)	2	
23	TB43640000A4	AIRBREEDERASS'Y	1	
24	TTE0310000A4	PIPE,AIRBREETHER	1	
25	NTE0920000A2	COVERASS'Y,REAR	1	
27	26367-100002	NUT,HEXAGONFLANGE	4	
37	TTE0230000B3	SEAT SAFETY BELT	1	
35	NTE0410000A2	GRAMMERSEATASS'Y	1	
38	NTE0270000D3	SUPPORT, SEAT FRAME L(UPPER)	1	
39	NTE0370000D3	SUPPORT, SEAT FRAME R(UPPER)	1	
40	TZE1040003B3	SMV BRACKET ASS'Y	1	
41	26106-060142	BOLT	1	

FIG S141A 4720	FUEL TANK OLD VERSION	Year/Month 2020/02

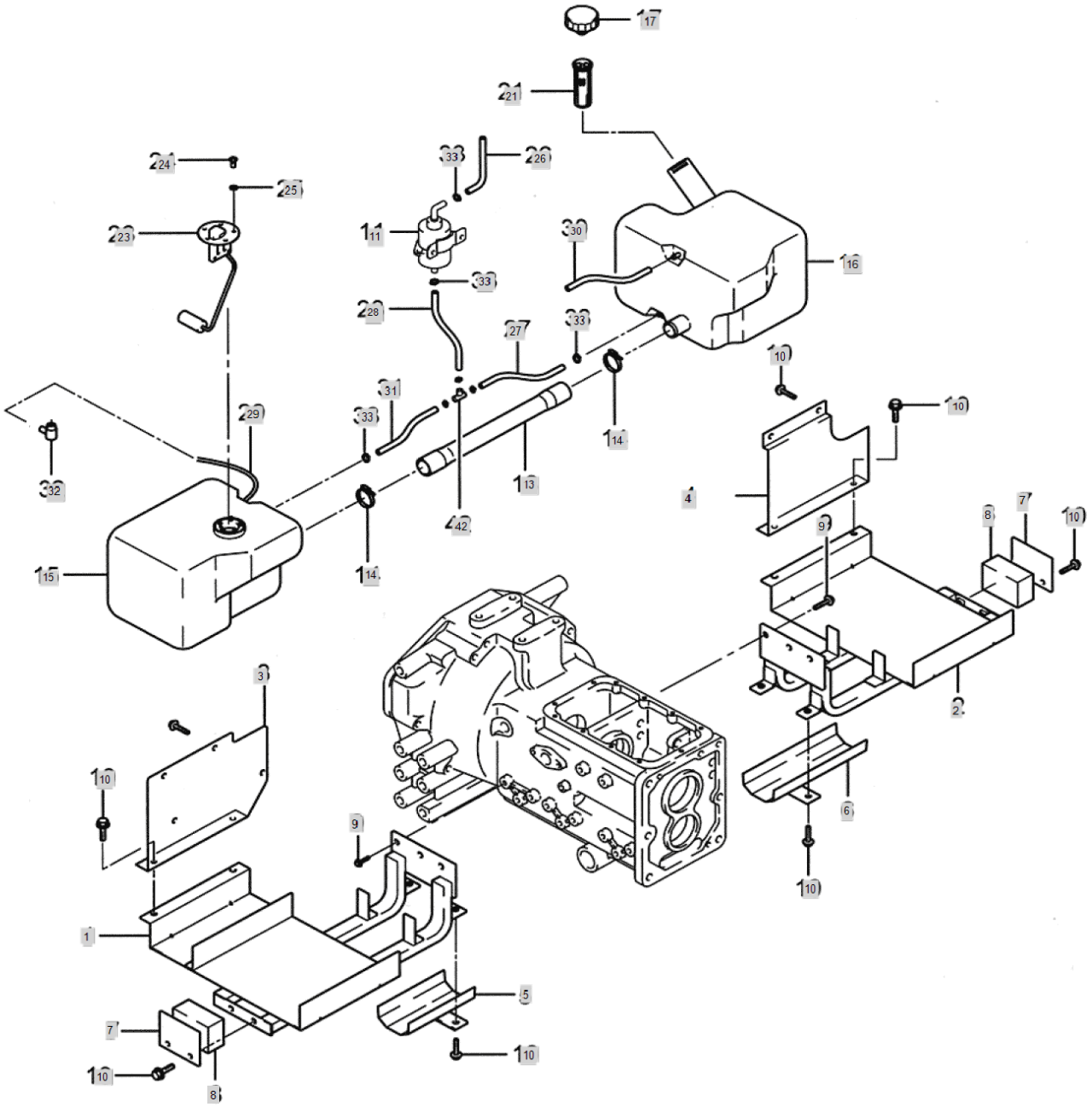

FIG S141A 4720	FUEL TANK OLD VERSION	Year/Month 2020/02

KeyNo.	Part Number	Part Name	Quantity	Other
1	NTE1510000A1	SUPPORTL,FUELTANK	1	
2	NTD9380000A2	FUELTANKSTAY(R)	1	
3	NTD9400000A3	FUELTANKCOVER(L)	1	
4	NTD9410000B3	FUELTANKCOVER(R)	1	
5	NTD9350000A3	FUELHOSECOVER(L)	1	
6	NTD9360000A3	FUELHOSECOVER(R)	1	
7	NTD9390000A4	SIDEHOLDER	2	
8	NTD9430000A4	FUELTANKURETHAN	2	
9	26106-100202	HEX BOLT, (10-20)	6	
10	26106-080162	SCREW,HEXFLANGEHEADCAP	12	
11	NTE1110000A3	FEED PUMP, FUEL	1	
13	NTE1140000A3	FUELTANKHOSE	1	
14	23000-054000	HOSECLAMP54	2	
15	NTE1010000A0	FUELTANK[L]	1	
16	N/A	SEE COMMENTS.	1	
17	NTE1170000A3	CAP,FUELTANK	1	
21	TNE11800A0A9	STRAINERFUEL	1	
23	NTE1380000A9	SENSOR,FUEL	1	
24	26716-050002	Nut, Hexa (Φ5)	5	
25	22217-050000	WASHER, SPRING (Φ 05)	5	
26	TA00055012A	HOSE, FUEL	1	
26-1	23980-730250	FLOAT HOSE	1	DELETE
27	23980-730570	HOSER/T-TJ	1	
28	23980-730980	FLOAT HOSE	1	
29	23980-730950	FLOATHOSE	1	
30	23980-730740		1	
31	23980-730200	HOSEL/T-T/J	1	
32	TB43640000A4	AIRBREEDERASS'Y	1	
33	23000-016000	Clip, Hose (Φ16)	9	
34	23000-013000	Clip, Hose (Φ13)	2	
42	TC51080000A4	T-JOINT	1	
43	TTC4010000A4	TANKRUBBER,DUSTPROOF	2	

FIG S144 4720	DECALS	Year/Month 2020/02

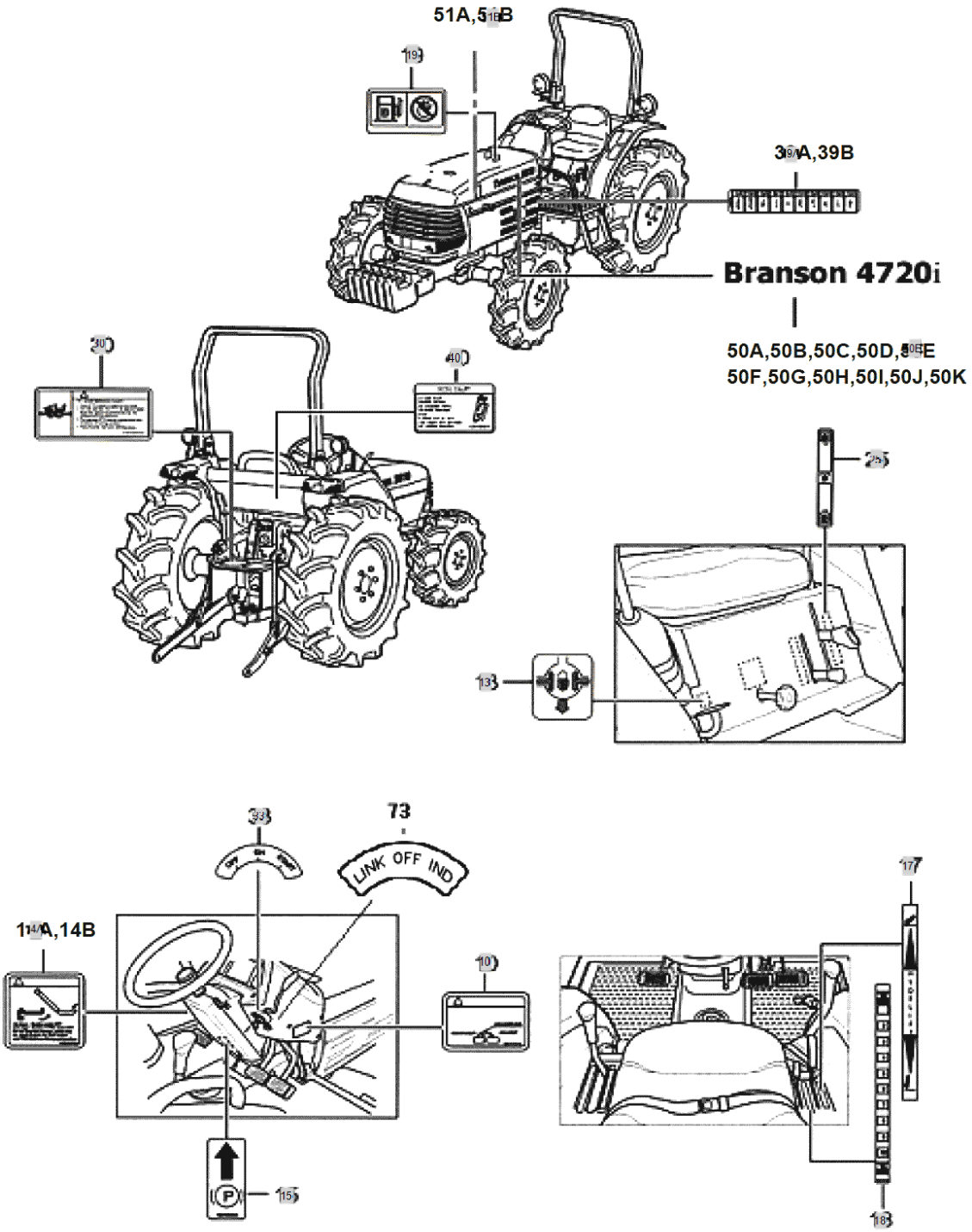

FIG S144 4720	DECALS	Year/Month 2020/02

KeyNo.	Part Number	Part Name	Quantity	Other
10	TZE4100000B4	LABEL,BRAKEPEDAL	1	
13	TZE4130000B4	LABEL,DIFFERENTIAL	1	
14A	NTE4140000B4	NAMEPLATE,USINGCLUTCH	1	
15	TZE4150000A4	LABEL, PAKING BRAKE	1	
17	TZE4170000B4	LABEL,HYDLIFT	1	
18	TZE4180000A4	LABEL,DRAFTDEPTH	1	
19	TZE4190000C4	LABEL, FUEL CAUTION	1	
25	TZE4250000A4	NAMEPLATE,PTO1~2	1	
30	TZE4300000B4	NAME PLATE, PTO CAUTION	1	
33	TZE4330000B4	MARK, MAIN SWITCH	1	
39A	NTE4390000B4		1	
40	TZE4400000A4	NAMEPLATE,DRAFT	1	
50E	NTE4800600A1	NAMEPLATE(4720),BONNET	2	
51B	NTE4520000A1	SIDECOVERLINE	2	

FIG S145 4720	DECALS	Year/Month 2020/02

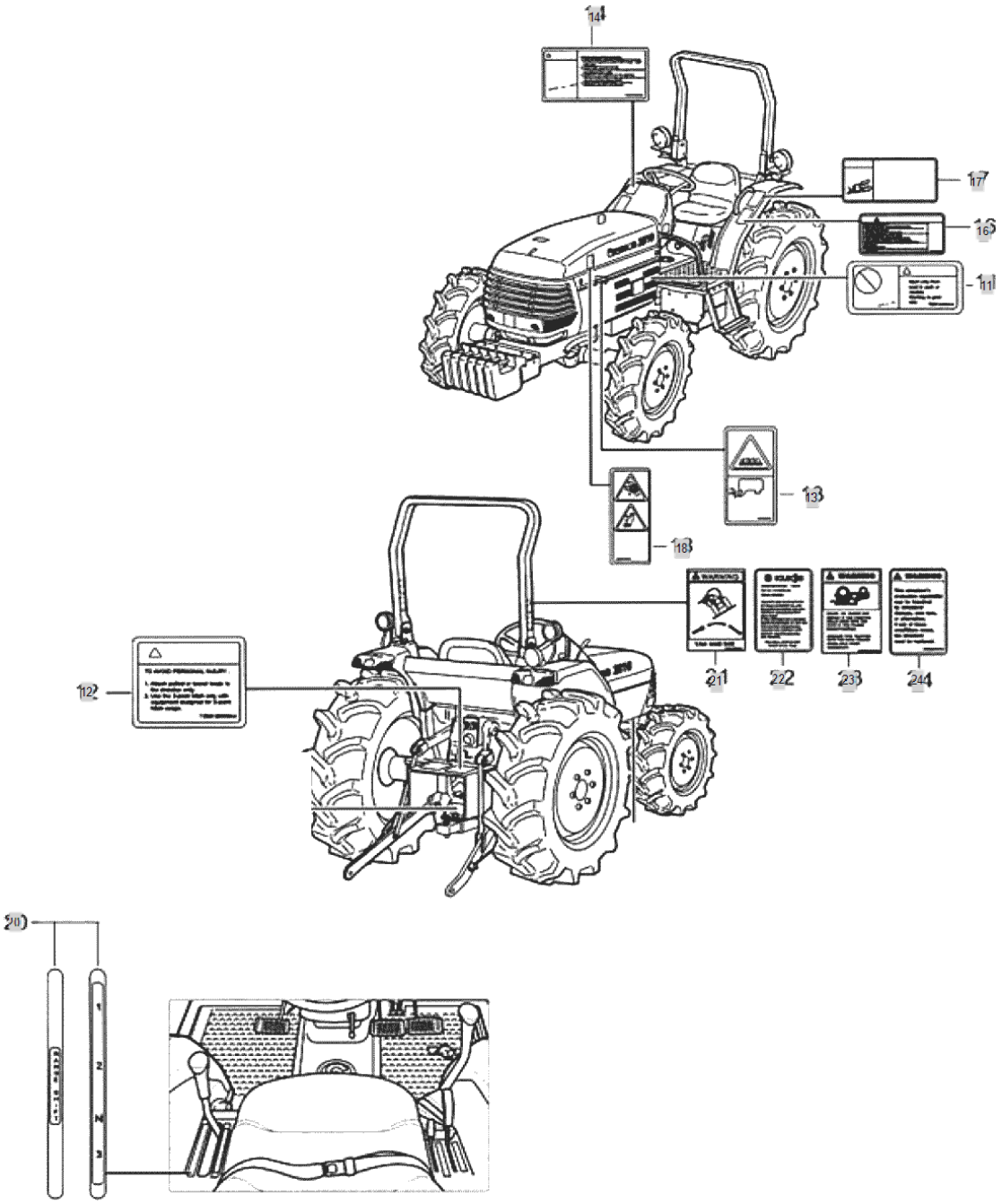

FIG S145 4720	DECALS	Year/Month 2020/02

KeyNo.	Part Number	Part Name	Quantity	Other
11	TZE5110000B4	NAMEPLATE,STARTERWARNING	1	
12	TZE5120000B4	NAME PLATE, EQUIP	1	
13	TZE5130000C4	NAME PLATE, CAUTION	1	
14	TZE5140000B3	NAME PLATE, DOWN LOAD	1	
16	TZE5160000B3	NAME PLATE, SAFETY	1	
17	TZE5170000B3	NAME PLATE, ROPS CAUTION	1	
18	TZE5180000C4	NAME PLATE, REVOLUTION	1	
20	NTE5200000B3	NAME PLATE, RANGE SHIFT	1	
21	NTE5150000C4	NAMEPLATE,SEATBELT	1	
22	NTE5830000A4	NAME PLATE, ROPS	1	
23	NTE5210000C4	NAMEPLATE,SAFETY	1	
24	NTE5220000C4	NAMEPLATE,DANGER	1	

FIG S146-A 4720	TOP LINK EARLY VERSION	Year/Month 2020/02

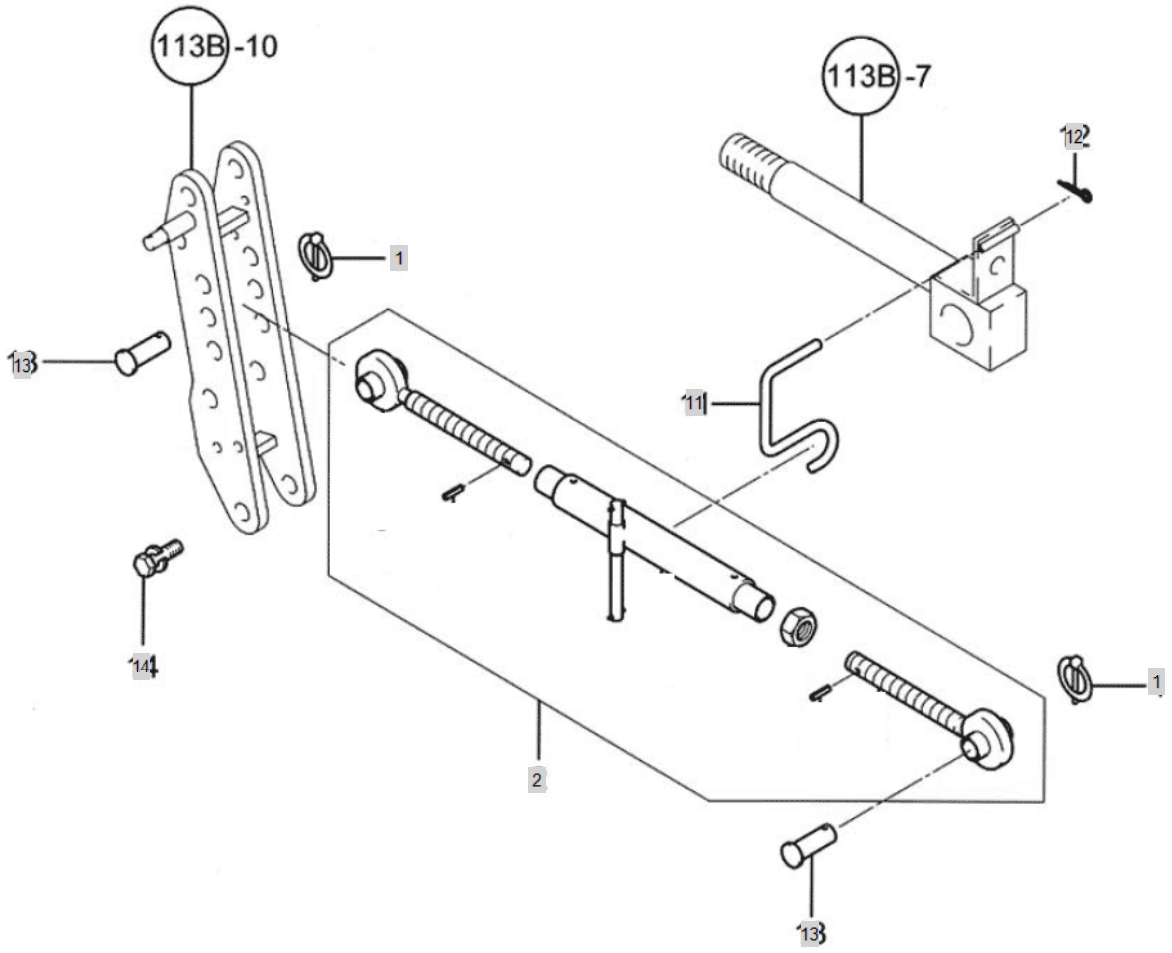

FIG S146-A 4720	TOP LINK EARLY VERSION	Year/Month 2020/02

KeyNo.	Part Number	Part Name	Quantity	Other
1	TJ30110000A4	RING PIN	2	
2	NTE60209INA3	TOP LINK ASSY -> TA00034892A	1	
11	TTE6110000A4	SPRING,TOPLINKHOLDING	1	
12	22417-250250	PIN , COTTER (2-25)	1	
13	TTE6130000A4	PIN	2	
14	26013-080182	SCREW,CAPTIVEWASHERCAP	2	

FIG S147-A 4720	LIFT LINK R EARLY VERSION	Year/Month 2020/02

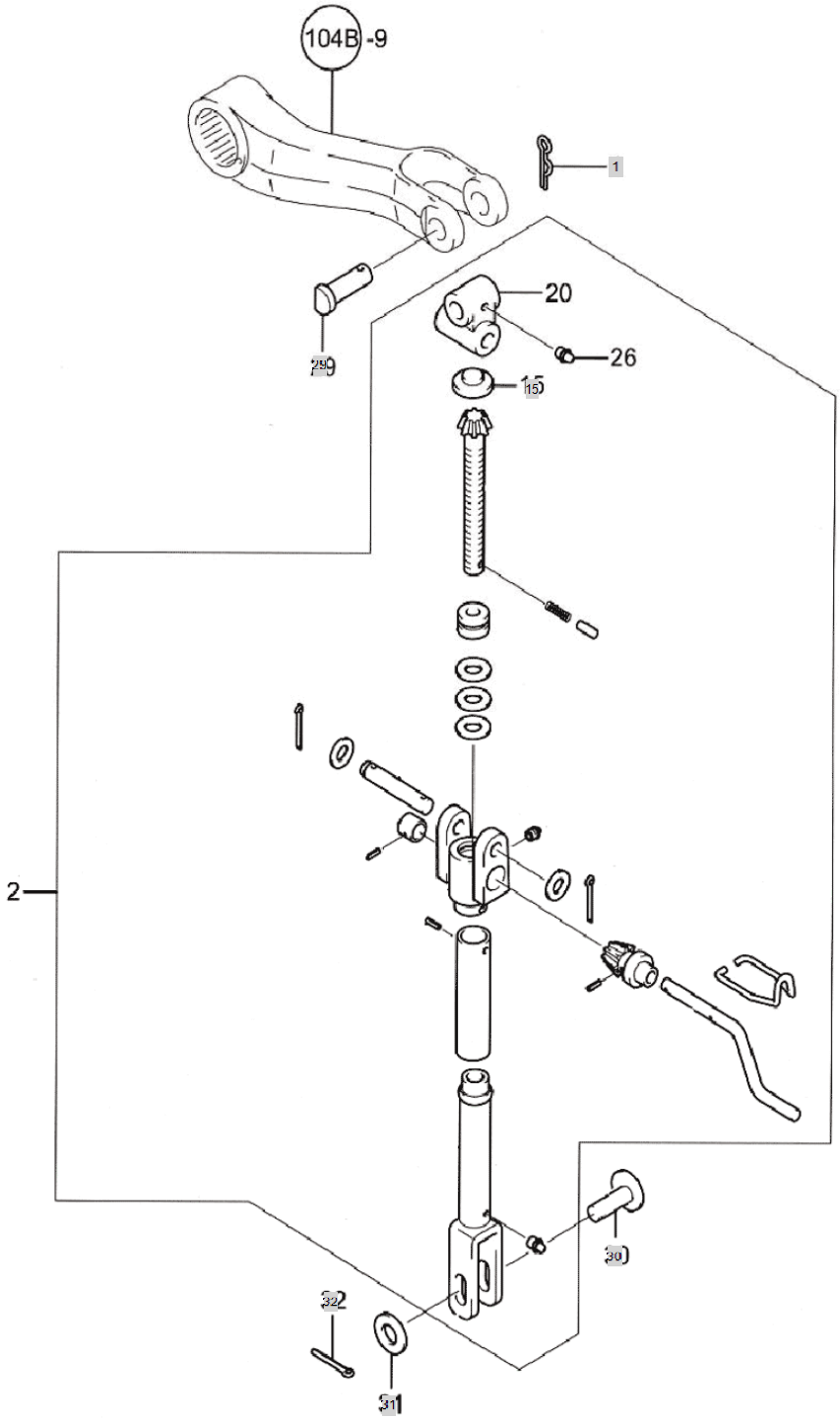

FIG S147-A 4720	LIFT LINK R EARLY VERSION	Year/Month 2020/02

KeyNo.	Part Number	Part Name	Quantity	Other
1	TTE7010000A4	SNAPPIN	1	
2	TZE7020000A2	LIFTLINK(R)	1	
15	27231-450000	PLUG,EXPANSION	1	
29	TTE7290000B4	PIN	1	
30	TZE7300000A4	PIN,LIFTLINK	1	
31	22127-160000	WASHER, SPLAIN (Φ 16)	1	
32	22417-320250	PIN , COTTER (3-25)	1	

FIG S148-A 4720	LIFT LINK L EARLY VERSION	Year/Month 2020/02

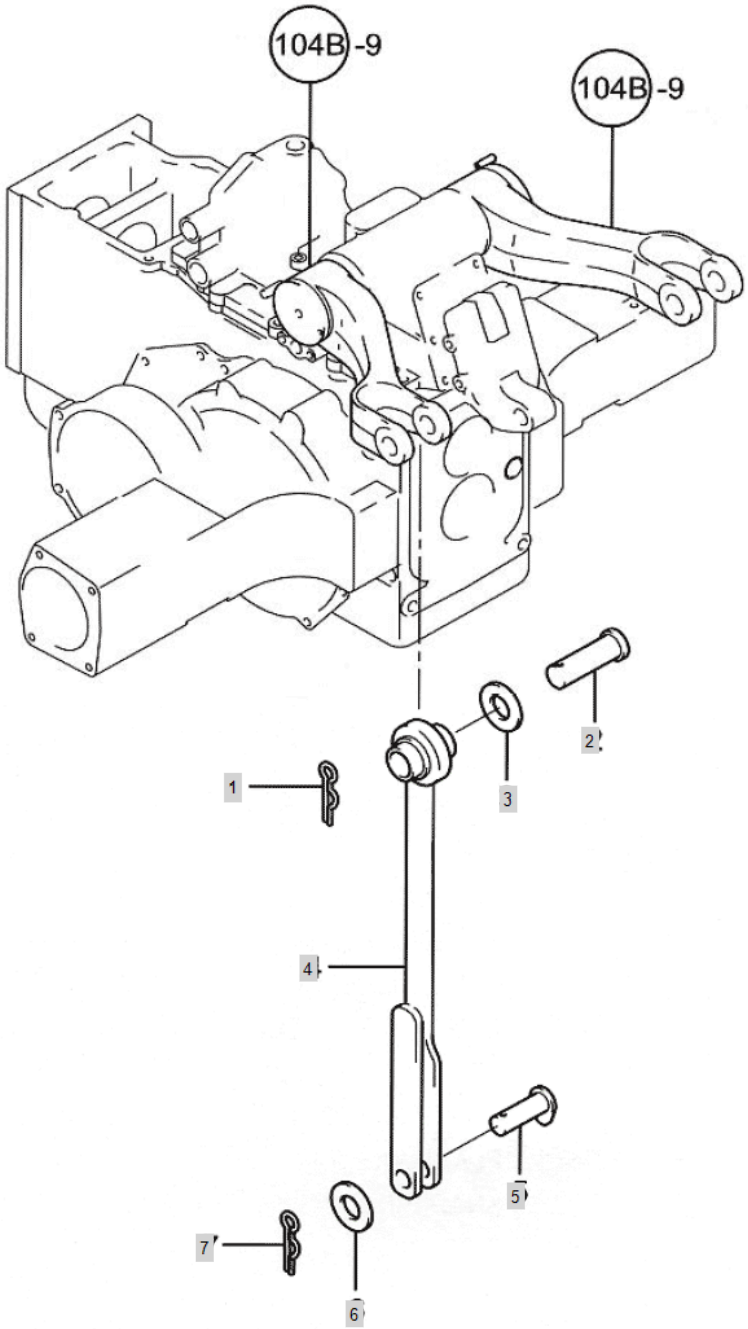

FIG S148-A 4720	LIFT LINK L EARLY VERSION	Year/Month 2020/02

KeyNo.	Part Number	Part Name	Quantity	Other
1	TTE7010000A4	SNAPPIN	1	
2	TTE7290000B4	PIN	1	
3	TTE8030000A4	WASHER	1	
4	TZE8040000A2	LIFTLINK(L)ASS`Y	1	
5	TZE7300000A4	PIN,LIFTLINK	1	
6	22137-160000	WASHER, PLAIN (Φ 16)	1	
7	22417-320250	PIN , COTTER (3-25)	1	

FIG S150 4720	LOWER LINK	Year/Month 2020/02

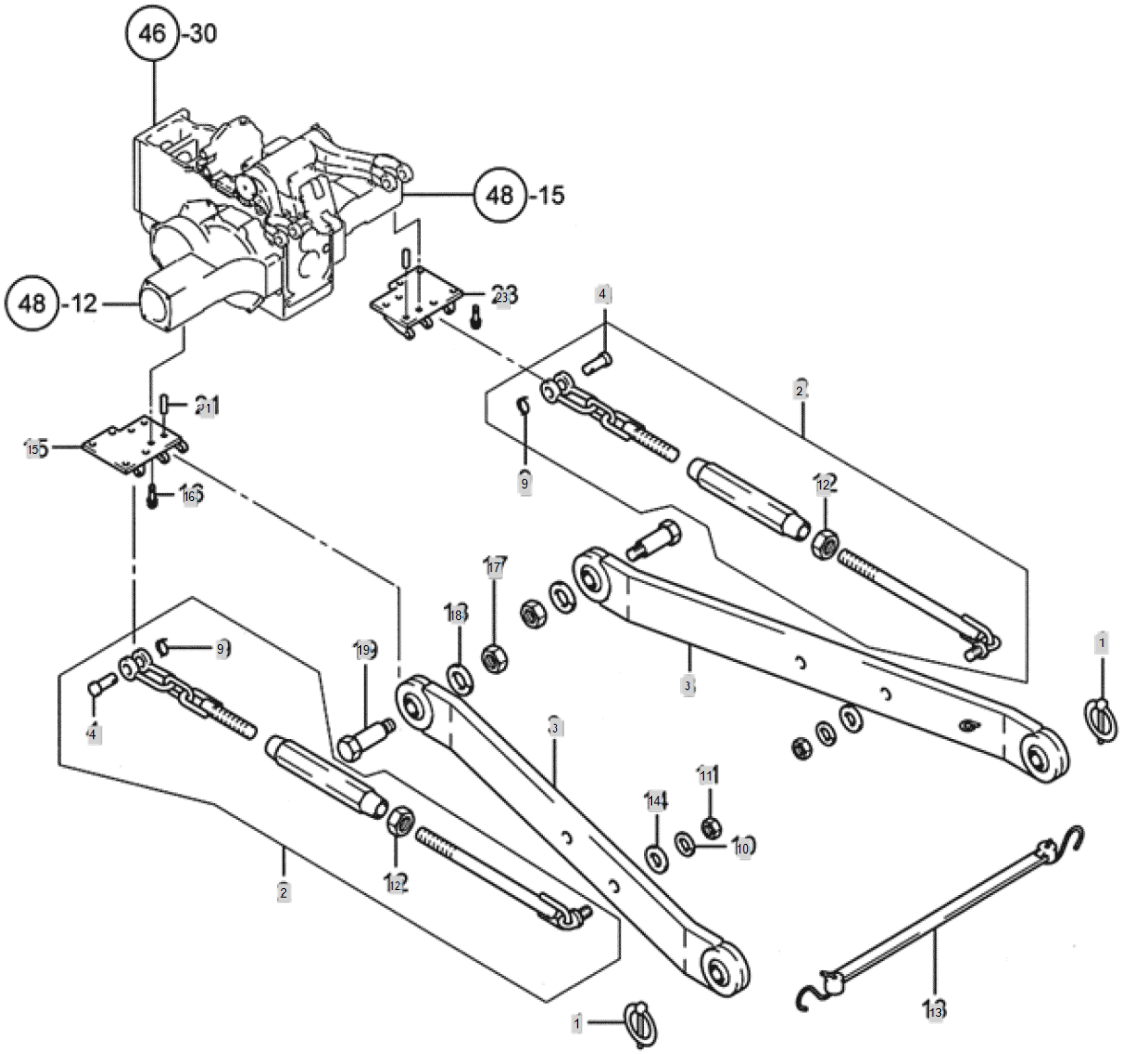

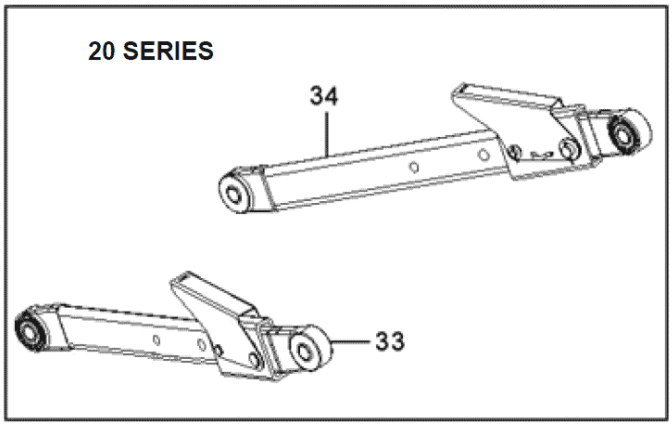

FIG S150 4720	LOWER LINK	Year/Month 2020/02

KeyNo.	Part Number	Part Name	Quantity	Other
1	TB44030000B4	RING PIN ASSY	2	
2	NTF00200INA3	CHAIN ASS'Y, CHECK	2	
3	TZF00300INC1	LOWER LINK ASSY'	2	
4	TB44510000A4	PIN	2	
9	TB46070000A4	RING	2	
10	22217-180000	WASHER, SPRING (Φ 18)	2	
11	26736-180002	NUT	2	
12	26756-160002	NUT	2	
13	TH25190000A3	RUBBERASS'Y,LINKHOLDING	1	
14	TTF0070000A4	WASHER	2	
15	TNF0150000A2	BRACKET(L)A'SSY	1	
16	26013-120302	HEX BOLT W/WASHER	6	
17	26736-160002	HEXNUT	2	
18	22217-160000	WASHER, SPRING (Φ 16)	2	
19	TB44360000A4	BOLT	2	
21	22312-120220	PIN, DOWEL (12-22)	2	
23	TNF0230000A2	BRACKET(R)A'SSY	1	

FIG S152 4720	DRAWBAR HITCH	Year/Month 2020/02

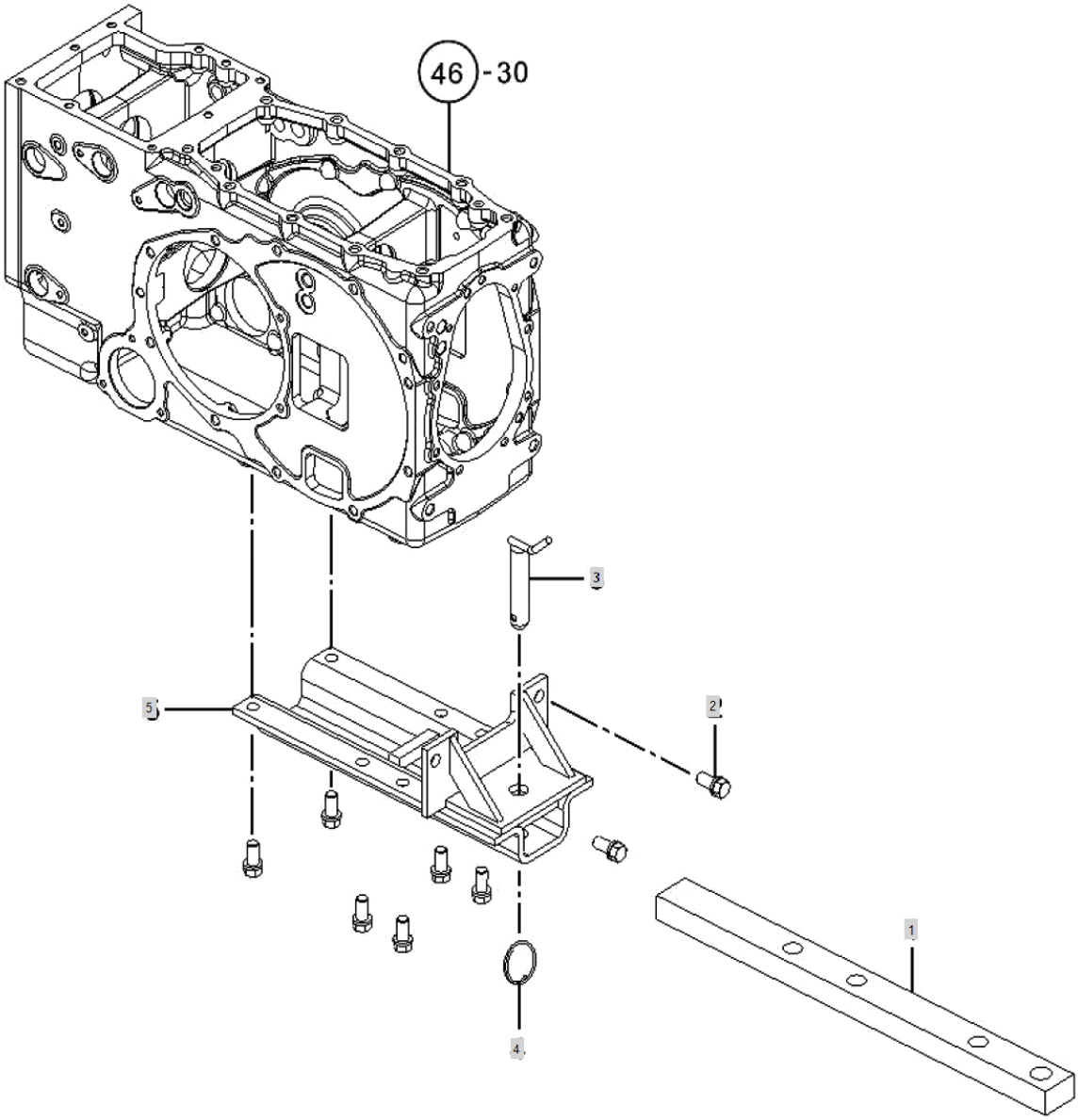

FIG S152 4720	DRAWBAR HITCH	Year/Month 2020/02

KeyNo.	Part Number	Part Name	Quantity	Other
1	NTF20100INA4	DRAW BAR	1	
2	26013-140302	BOLT(+SW)	8	
3	TB46060000A4	HITCHPIN22	1	
5	TZF2050000A1	BRACKETDRAWBARHITCH	1	
4	TB46070000A4	RING	1	

FIG S158 4720	ROPS	Year/Month 2020/02

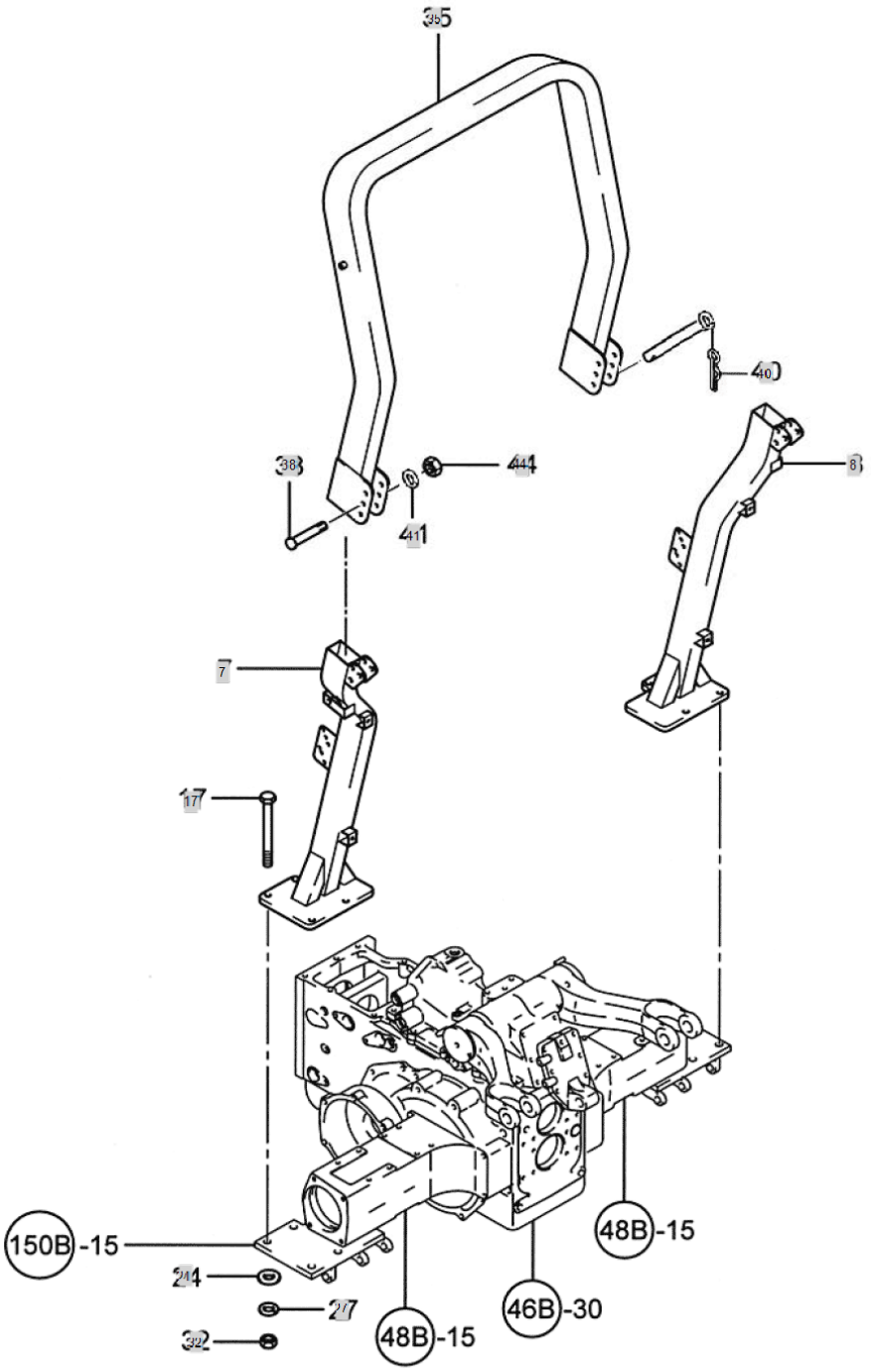

FIG S158 4720	ROPS	Year/Month 2020/02

KeyNo.	Part Number	Part Name	Quantity	Other
7	NTF807H000F0	FRAME ASS'Y(L),LOWER	1	
8	NTF808H000F0	FRAME ASS'Y(R),LOWER	1	
17	TTF8170000A4	BOLT	8	
24	22137-160000	WASHER, PLAIN (Φ 16)	8	
27	22217-160000	WASHER, SPRING (Φ 16)	8	
32	26716-160002	NUT	8	
35	NTF8350000B0	ROPS ASSY	1	
38	26116-181002	BOLT	2	
40	NTF8400000A3	ROPSPIN	2	
41	22217-180000	WASHER, SPRING (Φ 18)	2	
44	26716-180002	NUT	2	

FIG S160 4720	FRONT WEIGHT	Year/Month 2020/02

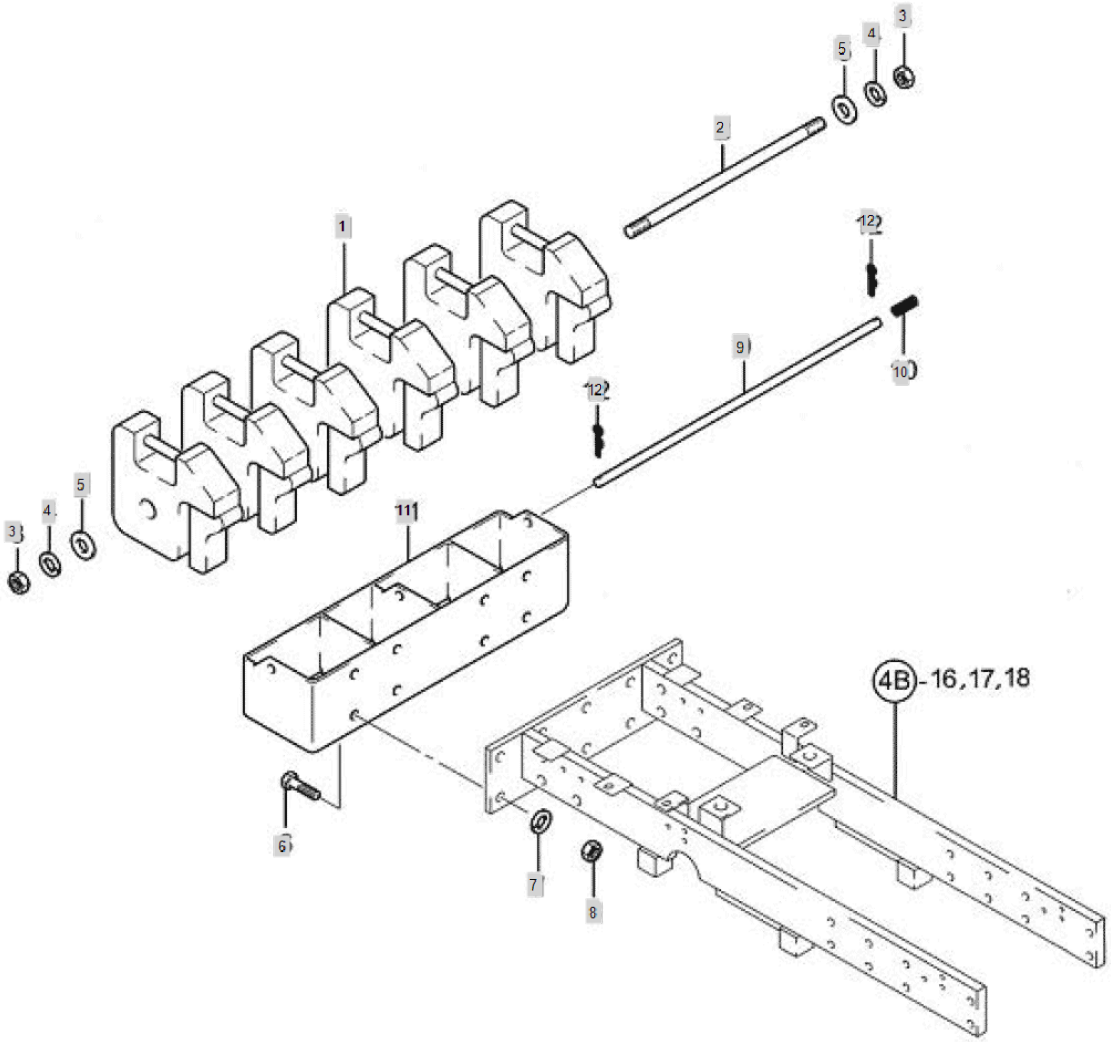

FIG S160 4720	FRONT WEIGHT	Year/Month 2020/02

KeyNo.	Part Number	Part Name	Quantity	Other
1	TTG0010000B2	WEIGHT,FRONT[20KG]	6	
2	TTG0020000B4	LOCKBAR	1	
3	26716-160002	NUT	2	
4	22217-160000	WASHER, SPRING (Φ 16)	2	
5	22137-160000	WASHER, PLAIN (Φ 16)	2	
6	26116-160402	BOLT	8	
7	22217-160000	WASHER, SPRING (Φ 16)	8	
8	26716-160002	NUT	8	
9	TNF1030000A4	LOCKPIN	1	
10	TTF1040000A4	SPRING	1	
11	TZG0110000B2		1	
12	22360-160000	PIN , SNAP (6Φ)	1	

FIG S161 4720	ENGINE SUB	Year/Month 2020/02

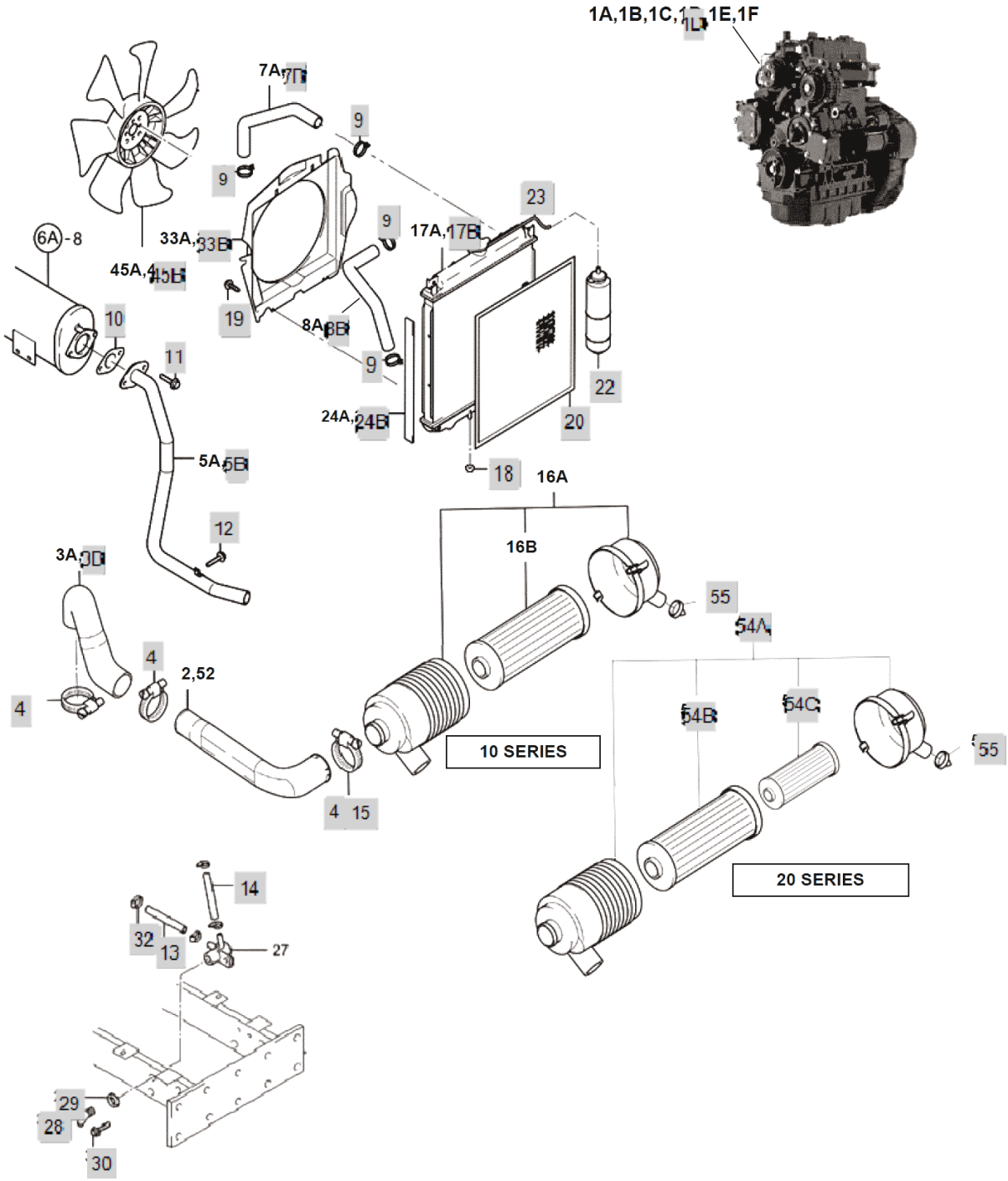

FIG S161 4720	ENGINE SUB	Year/Month 2020/02

KeyNo.	Part Number	Part Name	Quantity	Other
1D	HRGPA10000A0	ENGINE ASS'Y(G4020-ATPA2)	1	
3B	HR50160000A2	JOINTHOSE	1	
4	23000-070000	CLAMP,HOSE	2	
5B	NTG1550000C2	EXHAUST PIPE	1	
7B	HR50130000A3	HOSEA,RADIATOR	1	
8B	HRB1203500A2	HOSE,LOWER	1	
9	23010-038000	HOSEBAND	4	
10	HK0514000EA4	GASKET	1	
11	26106-080202	SQR FLANGE BOLT	2	
12	26106-080122	Bolt, Hexa (8-12)	1	
13	23980-730980	FLOAT HOSE	1	
14	HM50220000A4	DRAINHOSEB	1	
15	23000-080000	HOSECLAMP80	1	
18	HRA1203300A4	RUBEER, VIBRATION PROOF	2	
19	HRA1203200A4	TAPPINGSCREW	4	
20	HRA1204900A2	SCREEN,DUSTPROOF	1	
22	CA09270000C2	COOLANT RESERVOIR	1	
23	HM50240000A4	DRAINHOSE	1	
24B	NTG1240000A4	Seal(RD)	4	
27B	CE08210000B3	CORK,FRONT	1	
28	HH12310000A4	PLUG,DRAIN CORK	1	
29	HH12320000B4	PACKING, DRAIN COCK	1	
30	26106-080162	SCREW,HEXFLANGEHEADCAP	1	
32	23000-013000	Clip, Hose (Φ13)	7	
33B	NTG1330000A1	SHROUD	1	
41C	HRA0405600A3	DECAL(A2000N3)	1	
45B	HRC3000500A2	COOLING FAN (D405)	1	
52	NTG1520000A2	INTAKEPIPEASS'Y	1	
53	NTG1530000A4	CUSHION RUBBER, INTAKE PIPE	1	
54A	HLT0621000A2	AIRCLEANER A'SSY	1	
54B	HLT0621020A9	ELEMENT, AIR CLEANER (OUTER)	1	
54C	HLT0621030A9	ELEMENT, AIR CLEANER (INNER)	1	
55	HRA0500704A9	VACUATORVALVE	1	
17B	HRE1203000A1	RADIATOR ASSY (20 SERIES)	1	

FIG S190 4720	R2 (DOUBLE SCV) EARLY VERSION	Year/Month 2020/02

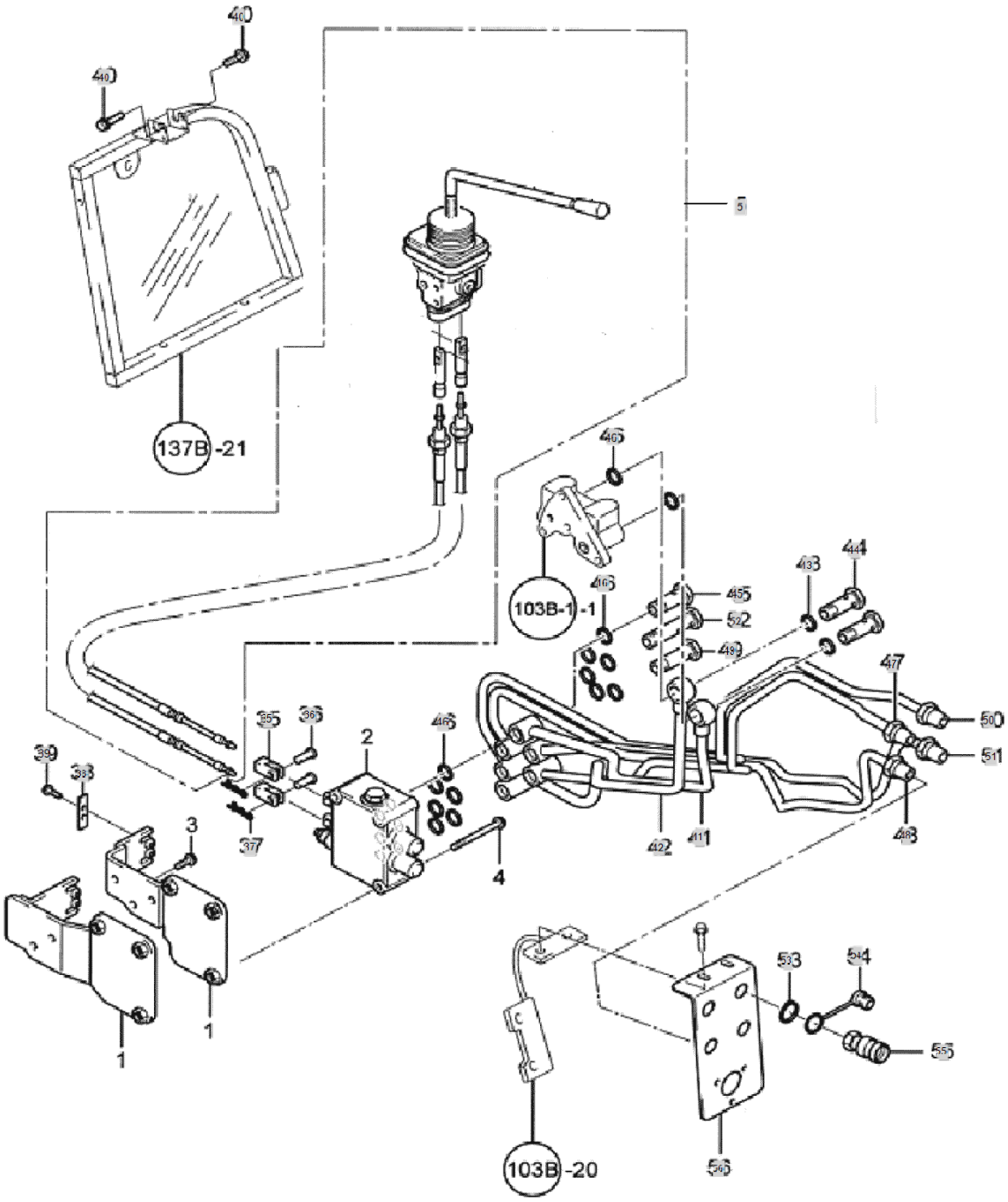

FIG S190 4720	R2 (DOUBLE SCV) EARLY VERSION	Year/Month 2020/02

KeyNo.	Part Number	Part Name	Quantity	Other
5	NTJ0080000A9	JOYSTICSET A'SST	1	
35	FTA3770000A4	CLEVIS	2	
36	FTA3780000A4	HEAD PIN	2	
37	RR64050000A4	Pin, Come-Off Snap (Φ8)	2	
38	FTA3510000A4	FIX PLATE	1	
39	26106-060142	BOLT	2	
40	26106-080162	SCREW,HEXFLANGEHEADCAP	2	
41	NTJ0170000B1	SCV PRESSURE PIPE	1	
42	NTJ0180000B1	SCV,RETURNPIPE	2	
43	23414-200026	WASHER, PLAIN (Φ 20)	4	
44	TTB4180000A4	BOLT	1	
45	TTA3750000A4	BOLT A	2	
46	23414-180023	COPPERPACKING	12	
47	NTJ0230000A0	PIPE(L-UP)1/2"	1	
48	NTJ0240000A0	PIPE(L-DOWN)1/2"	1	
49	TNA3930000A4	BOLT	2	
50	NTJ0260000A0	PIPE(R-UP)1/2"	1	
50	NTJ026J000B0		1	
51	NTJ0270000A0	PIPE(R-DOWN)1/2"	1	
52	TTA3760000A4	BOLTB	2	
53	22242-000250	SNAP RING, SHAFT (Φ 25)	4	
53	22242-000200	SNAP RING, SHAFT (Φ 20)	4	
54	TZA3250000A9	PLUG,JOINT	4	
55	TZA3280000A9	JOINT(1/2")	4	
56	NTJ0320000A3		1	

FIG S191 4720	RMK1 (SINGLE SCV), RMK2 (DOUBLE SCV) - CURRENT VERSION	Year/Month 2020/02

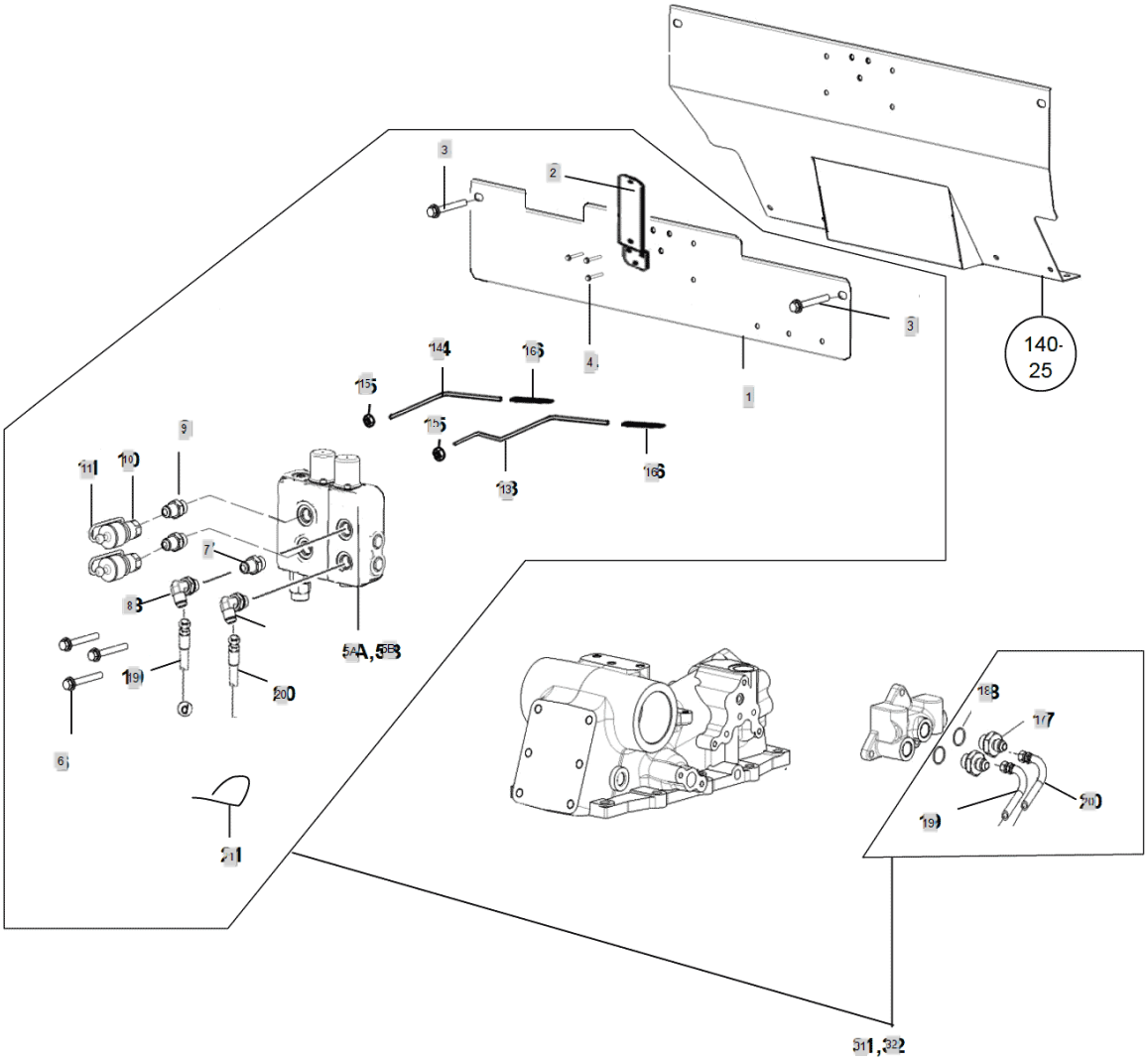

FIG S191 4720	RMK1 (SINGLE SCV), RMK2 (DOUBLE SCV) - CURRENT VERSION	Year/Month 2020/02

KeyNo.	Part Number	Part Name	Quantity	Other
1	HYD-MNT-PL	VALVE MOUNTING PLATE 10/20 SERS REMOTES	1	
2	HYD-MNT-BRKT	NEW EXTENDED SMV BRACKET FOR REMOTE VALVE	1	
3	26106-080252	SCREW,HEXFLANGEHEADCAP	2	
4	26106-060252	Screw, (6-25)	3	
5A	RM1	NEW STYLE SINGLE REMOTE VALVE ASSY	2	
5B	RM2	NEW STYLE DOUBLE REMOTE VALVE ASS'Y	1	
6	8MB-8MJ90	SUB TO-> OR8C50X-S	1	
7	OR8F5OX-S	JIC Mb to Mp adapter	1	
8	24012	FITTING	1	
9	OR8-1/2F5OF-S	1/2 NPTX-8ORB	4	
10	FBA3150000A3	QUICK COUPLER (1/2")	4	
11	TZA3250000A9	PLUG,JOINT	4	
12	26106-080302	HEX BOLT, FLANGE	3	
13	HYD-BENT-HANDLE1	SINGLE BEND HYD REMOTE VALVE HANDLE	1	
14	HYD-BENT-HANDLE2	DOUBLE BENT HANDLE HYD REMOTE VALVE	1	
15	PA62041	METRIC NUT 8.8	2	
16	HYD-HDLE-GRIP	NEW SLIP-ON GRIP FOR REMOTES	2	
17	OR7005-08-20	SUB TO-> HF9606S-08-S12-20	2	
18	23414-200026	WASHER, PLAIN (Φ 20)	2	
19	HYD-HOSE-1	Return Hose Assy RMK (989401707)	1	
20	HYD-HOSE-2	Pressure Hose Assy RMK (989401708)	1	
21	PA16000	NYLON TIE STRAP	2	
31	RMK1	NEW STYLE SINGLE REMOTE KIT (N/A)	1	
32	RMK2	NEW STYLE REMOTE 2 VALVE KIT (N/A)	1	

FIG S200 4720	FILTERS	Year/Month 2020/02

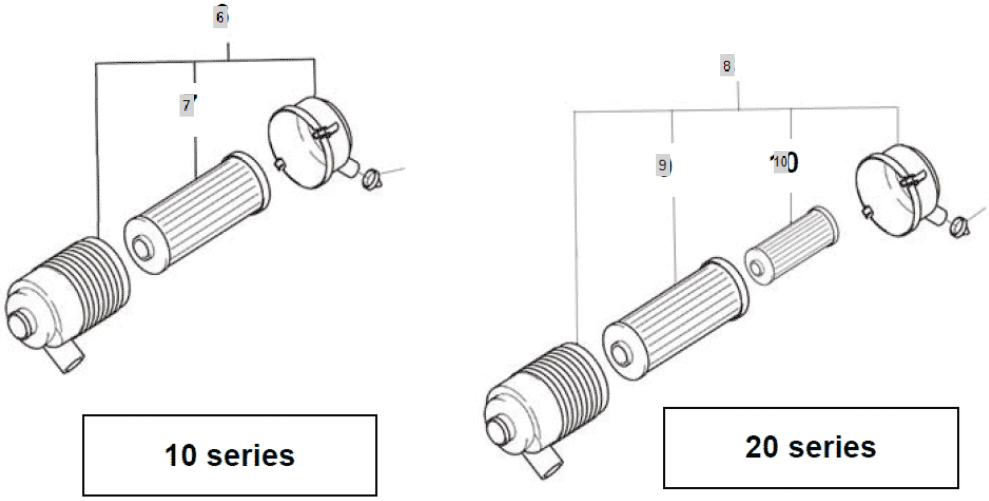

FIG S200 4720	FILTERS	Year/Month 2020/02

KeyNo.	Part Number	Part Name	Quantity	Other
1	HRA1102000A3	FILTER, ENGINE OIL	1	
2	HK13010000C2	FUEL FILTER ASSY	1	
3	HA13050000A4	CUP(FILLTER)	1	
4	HA13040000A4	ELEMENT, FUEL FILTER	1	
5A	NTB8030000B3	FILTER, HYDRAULIC OIL (10/20 SERIES)	1	
6	HRA0500700A1	AIRCLEANERASS`Y	1	
7	HRA0500702A9	ELEMENT	1	
8	HLT0621000A2	AIRCLEANER A'SSY	1	
9	HLT0621020A9	ELEMENT, AIR CLEANER (OUTER)	1	
10	HLT0621030A9	ELEMENT, AIR CLEANER (INNER)	1	