KUKJE 5220R Branson Tractor

Parts Catalogue

BRANSON TRACTOR

CONTENTS

GROUP NO	GROUP NAME	PAGE
000	5220R	5
E001	CYLINDER BLOCK	7
E002	GEAR CASE	9
E003	MOUNTING FLANGE & OIL PAN	11
E004	CYLINDER HEAD & HEAD COVER	13
E005	INTAKE MANIFOLD	16
E006	EXHAUST MANIFOLD & SILENCER	18
E007	CAM SHAFT & DRIVING GEAR	20
E008	CRANK SHAFT & PISTON	22
E010	BALANCER	24
E011	LUB. OIL SYSTEM	26
E012	COOLING SYSTEM	28
E013	FUEL INJECTION PUMP	30
E015	FUEL INJECTION SYSTEM & VALVE	32
E017	STARTING MOTOR	34
E018	GENERATOR & ELECTRIC DEVICE	36
S001	LEVER ACCELERATOR	38
S002	STEERING COLUMN	40
S003	SHUTTLE ASSY	42
S004	FRONT AXLE BRACKET	44
S009	CENTER PIN SUPPORTER	46
S010	TIE ROD	48
S012	RING GEAR, DIFFERENTIAL GEAR	50
S019	GEAR CASE, FRONT AXLE	52
S020	SPACER	55
S023	COVER SHAFT	57
S032	POWER STEERING CYLINDER	59
S034	POWER STEERING HYD LINE	61
S036	CLUTCH HOUSING (2)	63
S038	CLUTCH ASSY	65
S040	CLUTCH RELEASE	67
S041	TRANSMISSION CASE SHIFT	69
S042	MAIN REVERSER GEAR	72
S043	FRONT DRIVE & RANGE SHIFT	75
S044	FRONT DRIVE & RANGE SHIFT LEVER	77

GROUP NO	GROUP NAME	PAGE
S045	PTO SPEED SHIFT	80
S046	REAR AXLE CASE, PTO SHIFT	83
S047	LEVER ASS'Y, PTO SPEED CHANGE	85
S048	HOUSING, REAR AXLE	87
S049	DRIVING PART, REAR AXLE	89
S050	BRAKE	92
S053	BRAKE, CLUTCH PEDAL	94
S067	LEVER, MAIN SHIFT	97
S099-1	HYD PUMP	99
S099-2	HYD PUMP	101
S101	CASE, HYD CYLINDER	103
S102	IND PTO VALVE SUPPORT	105
S103	S.C.V. SUPPORT	107
S104	PISTON ASS'Y	109
S106	CONTROL VALVE	111
S108	RELIEF VALVE	113
S109	STOP VALVE	115
S110	SAFETY VALVE	117
S111	HYD CONTROL	119
S115.	HYD PIPING (2)	121
S118	HYD FILTER	123
S119	ELE'C WIRING	125
S124	BATTERY	127
S125	SWITCHES	129
S131	HORN	131
S132	LAMP	133
S134	METER ASS'Y	135
S135	HOOD	137
S136.	HOOD SUPPORT	139
S137	DASH BOARD	141
S138	FENDER	143
S139	FOOT REST ASSY	145
S140	SEAT	147
S141	FUEL TANK	149
S144.	NAME PLATE	151

GROUP NO	GROUP NAME	PAGE
S146	TOP LINK LIFT LINK	153
S150	LOWER LINK	155
S152	DRAWBAR HITCH	157
S158	SAFETY FRAME ASSY	159
S160	FRONT WEIGHT	161
S161.	ENGINE SUB	163
S190	MID REMOTE VALVE JOYSTICK	165
S191	FILTERS	167

FIG 000 5220R	5220R	Year/Month 2020/01

B CHASSIS

A ENGINE

FIG 000 5220R	5220R	Year/Month 2020/01

KeyNo.	Part Number	Part Name	Quantity	Other
A	522OR_A	A2300T3-R ENGINE	0	
B	5220R_B	5220R(20 R SERIES CHASSIS)	0	

FIG E001 5220R	CYLINDER BLOCK	Year/Month 2020/01

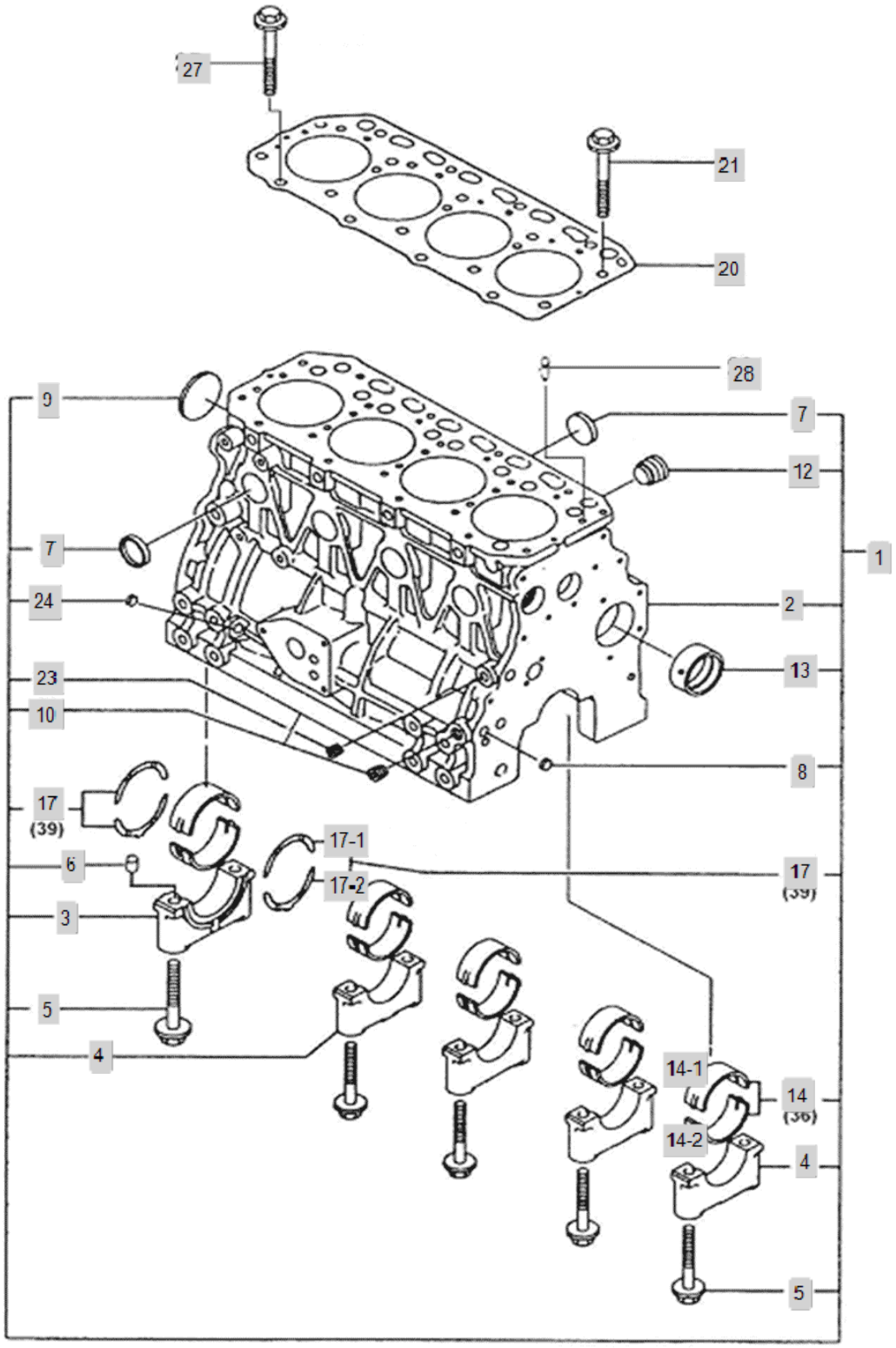

FIG E001 5220R	CYLINDER BLOCK	Year/Month 2020/01

KeyNo.	Part Number	Part Name	Quantity	Other
1	HRA0103100A9	BLOCK ASS'Y, CYLINDER	1	
2	HRA0103101A0	BLOCK, CYLINDER	1	
3	HRA0100102B3	CAP,MAIN BEARING	1	
4	HRA0100103B3	CAP,MAIN BEARING	4	
5	HRA0100104A4	SCREW,HEXFLANGEHEADCAP	10	
6	22351-030010	PIN, SPRING (3-01)	1	
7	27241-300000	PLUG (D30)	8	
8	HRA0100108A4	PLUG,EXPANSION	3	
9	27231-500000	PLUG,EXPANSION	1	
10	23871-020000	Plug, Pipe	1	
12	HM23030000A4	PLUG	1	
13	HRU0100105A3	BUSH, CAM SHAFT	1	
14	HRA0100200A9	BEARING,MAIN- >HRA0100201A3 HRA0100202A3	5	
17	HRA0100300A9	BEARING,CRANKSHAFT THRUST	2	
20	HRU0100400A2	GASKET,CYLINDER HEAD (A2300)	1	
21	HRA0100500A4	SCREW,HEXFLANGEHEADCAP	14	
23	23871-010000	PLUG	1	
24	HRT0300500A4	PLUG,EXPANSION	1	
27	HRA0100700A4	SCREW,HEXFLANGEHEADCAP	4	
28	HRA0100800A4	PIN,OIL	1	
14-1	HRA0100201A3	BEARING,MAIN (UPPER)	5	
14-2	HRA0100202A3	BEARING,MAIN (LOWER)	5	
17-1	HRA0100301A3	THRUST BEARING,CRANKSHAFT (UPPER)	2	
17-2	HRA0100302A3	THRUST BEARING,CRANKSHAFT (LOWER)	2	

FIG E002 5220R	GEAR CASE	Year/Month 2020/01

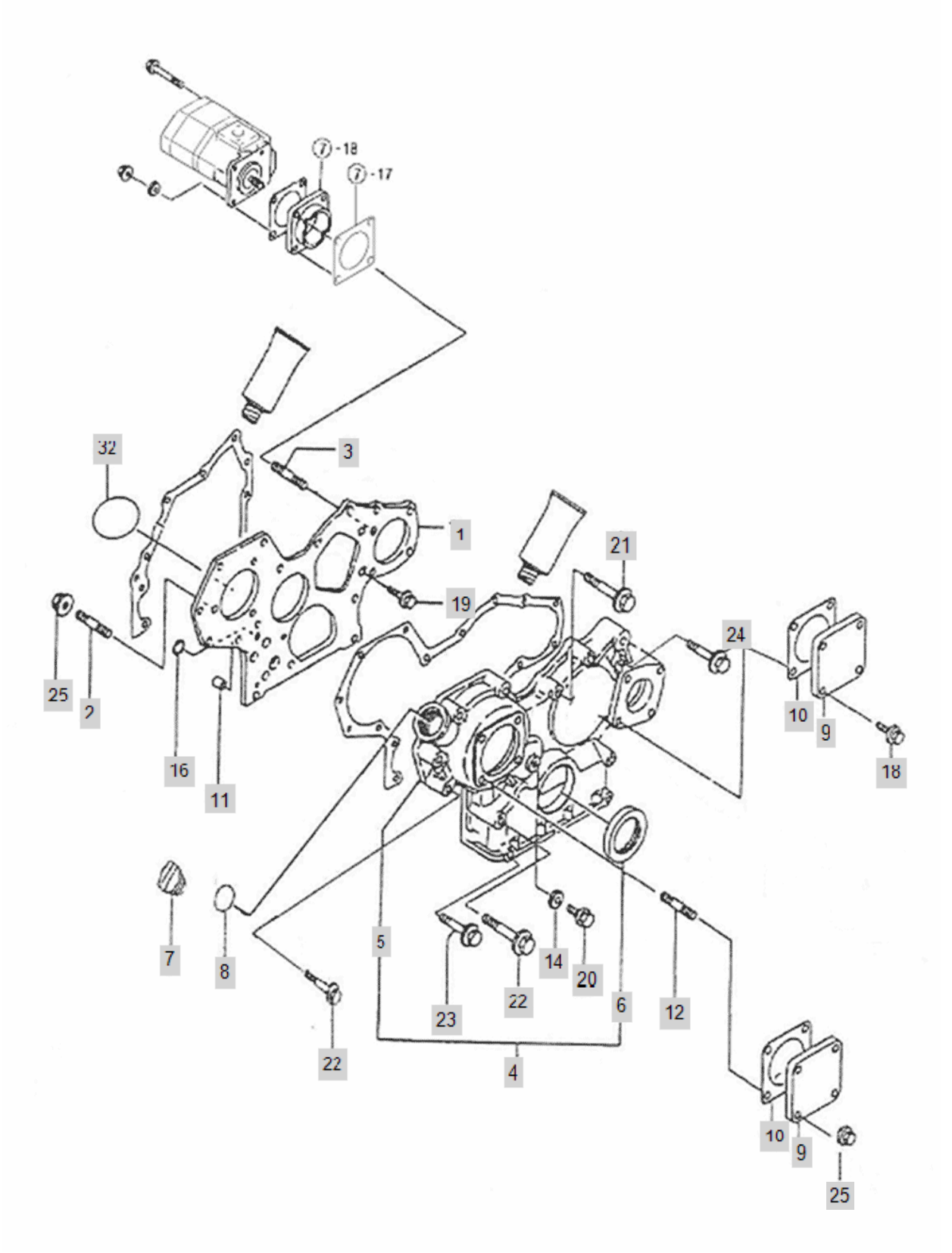

FIG E002 5220R	GEAR CASE	Year/Month 2020/01

KeyNo.	Part Number	Part Name	Quantity	Other
1	HRA020010DC2	PLATE, GEAR COVER	1	
2	HM02380000A4	STUD	3	
3	HK02380000A4	STUD	1	
4	EA00000527C	COVER,FRONT	1	
5	EA00000413B	COVER,FRONT	1	
6	HRC0200402B4	OIL SEAL (G)	1	
7	HC03470000B4	CAP,FILTER	1	
8	24311-000320	O-RING, DYNAMIC (Φ32)	1	
9	HC01230000C4	COVER,ACCESSORYDRIVE	2	
10	HA02110000B4	GASKET,ACCDRIVECOVER	2	
11	HRA0201100A4	PIN,GUIDE	2	
12	26216-080162	STUD	4	
14	23414-080000	WASHER, PLAIN (Φ8)	1	
16	24311-000160	O-RING, DYNAMIC (Φ16)	2	
18	26106-080122	Bolt, Hexa (8-12)	4	
19	26116-080162	SCREW,HEXAGONHEADCAP	3	
20	26106-080222	SCREW, HEX FLANGE HEAD CAP	1	
21	26106-080602	SCREW,HEXFLANGEHEADCAP	3	
22	26106-080902	SCREW,HEXFLANGEHEADCAP	2	
23	26106-080852	SCREW,HEXFLANGEHEADCAP	7	
24	26106-080502	SCREW,HEXFLANGEHEADCAP	1	
25	26367-080002	HEX FLANGE NUT (Φ8)	7	
32	24341-000500	O-RING, FIX (Φ50)	1	

FIG E003 5220R	MOUNTING FLANGE & OIL PAN	Year/Month 2020/01

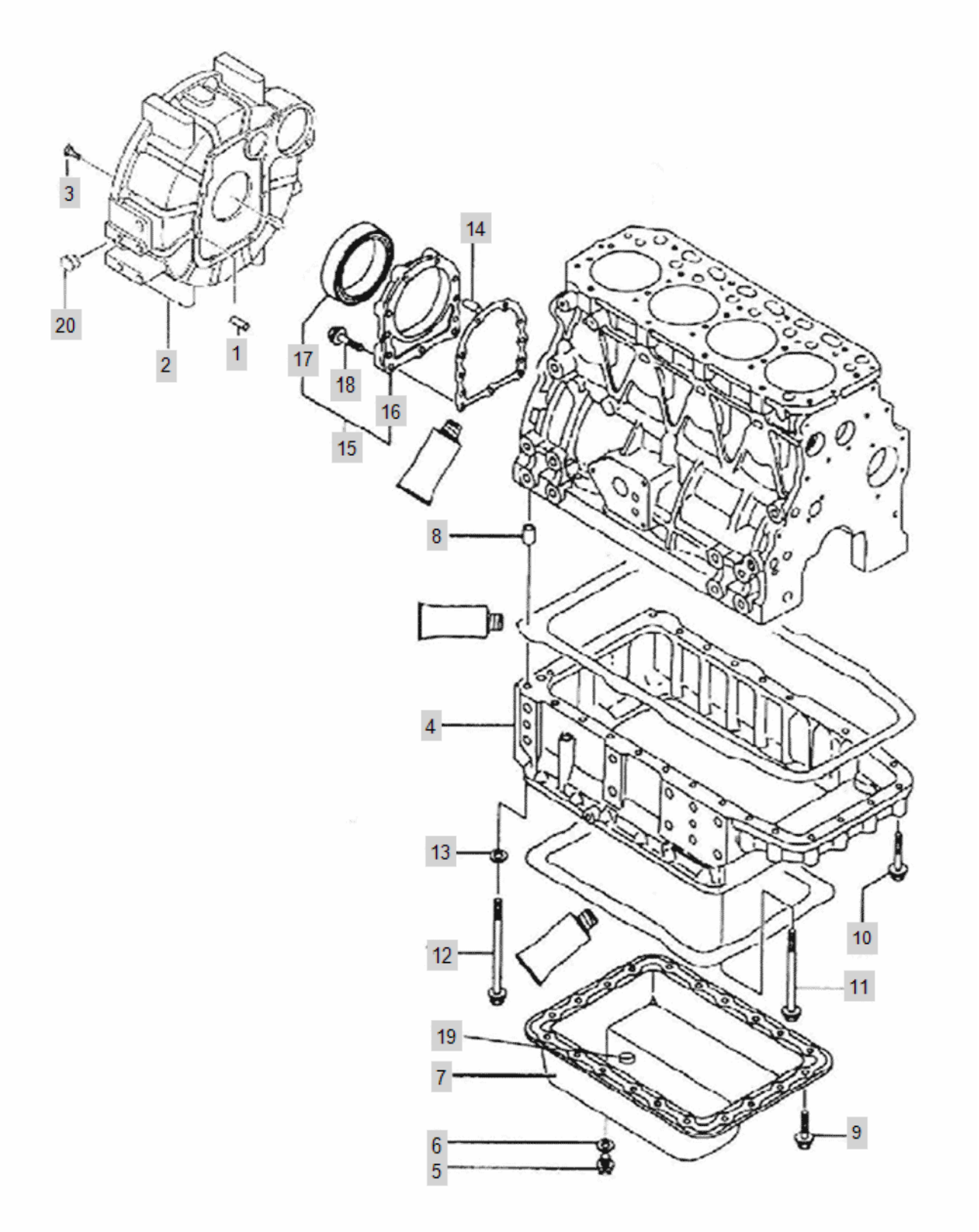

FIG E003 5220R	MOUNTING FLANGE & OIL PAN	Year/Month 2020/01

KeyNo.	Part Number	Part Name	Quantity	Other
1	22312-080160	PIN, DOWEL (8-16)	2	
2	HRC7000300A0	HOUING, FLYWHEEL	1	
3	26106-100202	HEX BOLT, (10-20)	8	
4	HRA0300400B0	ADAPTER,OIL PAN	1	
5	23490-140002	Plug, Drain	1	
6	24311-000160	O-RING, DYNAMIC (Φ16)	1	
7	HRA0300700A1	COVER, LOWER	1	
8	HRA0300800A4	PIN,GUIDE	1	
9	26106-080122	Bolt, Hexa (8-12)	8	
10	26106-080502	SCREW,HEXFLANGEHEADCAP	8	
11	26106-081202	SCREW,HEXFLANGEHEADCAP	16	
12	26116-081202	SCREW,HEXAGONHEADCAP	2	
13	22217-080000	WASHER, SPRING (Φ 08)	2	
14	22312-080160	PIN, DOWEL (8-16)	2	
15	HRC0300800A9	OIL SEAL HOUSE Ass'y	1	
16	HRA0301401B2	OILSEAL CASE	1	
17	HRC0300802A4	OIL SEAL (F)	1	
18	26106-080302	HEX BOLT, FLANGE	9	
19	HF01470000A4	MAGNET	1	
20	HH01110000A4	RUBBERCAP,FLYWHEELHOUSING	1	

FIG E004 5220R	CYLINDER HEAD & HEAD COVER	Year/Month 2020/01

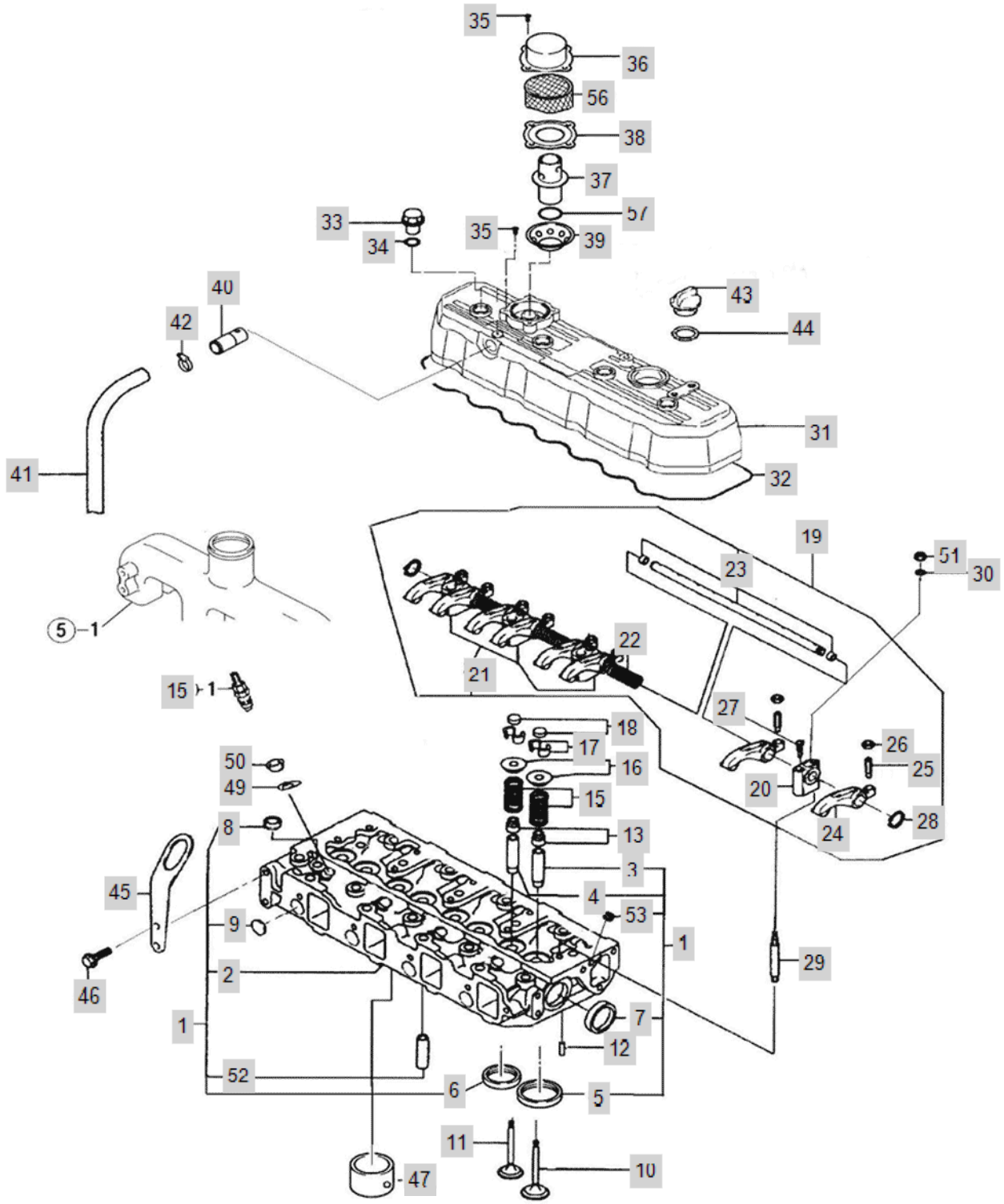

FIG E004 5220R	CYLINDER HEAD & HEAD COVER	Year/Month 2020/01

KeyNo.	Part Number	Part Name	Quantity	Other
1	EA00000636A	HEAD, CYLINDER (A2300T)	1	
2	EA00000624A	HEAD, CYLINDER	1	
3	HRA0400102B4	GUIDE,VALVESTEM	4	
4	HRA0400103B4	GUIDE,VALVESTEM	4	
5	HRA0400104B4	SEAT,ENGINEINTAKEVALVE	4	
6	HRA0400105B4	SEAT,ENGINE EXHAUST VALVE	4	
7	27241-400000	PLUG (D40)	2	
8	27241-220000	PLUG,EXPANSION	4	
9	27241-220000	PLUG,EXPANSION	4	
10	HRA0400200A4	VALVE,INTAKE	4	
11	HRA0400300A4	VALVE,EXHAUST	4	
12	22312-040100	PIN, DOWEL (4-10)	2	
13	HA03070000A4	SEAL,VALVESTEM	8	
15	HRA0400700A4	SPRING,VALVE	8	
16	HRA0400800A4	RETAINER,VALVESPRING	8	
17	HRA0400900A4	COTTER,VALVE	16	
18	HK03680000B4	CAP,VALVE	8	
19	HRA0401100B2	LEVER,ROCKER	1	
20	HRA0401200A4	SUPPORT,ROCKERLEVER	1	
21	HRA0401300A4	SUPPORT,ROCKERLEVER	3	
22	HRA0401400A4	SPRING,COMPRESSION	3	
23	HRA0401500A2	SHAFT,ROCKERLEVER	1	
24	HRA0401600A4	LEVER,ROCKER	8	
25	AF02110000E4	SCREW,RKRLEVERADJUSTING	8	
26	HH05280000A4	NUT,VALVEADJUSTING	8	
27	26921-080102	SCREW,SLOTTEDSET	1	
28	22242-000190	SNAP RING, SHAFT (Φ 19)	2	
29	HRA0401800A4	STUD	4	
30	22117-120000	WASHER, PLAIN (Φ 12)	4	
31	HRA0402300B0	COVER,VALVE	1	
32	HRA0402400B3	GASKET,VALVECOVER	1	
33	HA03520000B4	NUT,HEXAGONCAP	4	
34	24311-000140	O-RING, DYNAMIC (Φ14)	4	
35	26587-040102	SCREW,FILLISTERHEADCAP	4	
36	HRA0403600A4	COVER,BREATHER	1	
37	HRA0403700A4	Valve, Pressure Relief	1	
38	HRA0403800A4	GASKET,BREATHER	1	
39	HRA0403900A4	PLATE,BREATHERADJUSTING	1	
40	HRA0404000A4	TUBE,BREATHER	1	
41	HLT0501000A4	HOSE,PLAIN	1	
42	23080-021000	CLAMP,VBAND	1	
43	HC03470000B4	CAP,FILTER	1	
44	24311-000320	O-RING, DYNAMIC (Φ32)	1	
45	HK03530000A4	BRACKET,LIFTING	1	
46	26106-080162	SCREW,HEXFLANGEHEADCAP	2	

FIG E004 5220R	CYLINDER HEAD & HEAD COVER	Year/Month 2020/01

KeyNo.	Part Number	Part Name	Quantity	Other
47	EA00000083A	PRE-CHAMBER	4	
49	HRA0404900A4	SEAL,INJECTOR	4	
50	HRA0405000A4	SPACER, FUEL INJECTOR	4	
51	HA03180000B4	NUT,REGULARHEXAGON	4	
53	23871-010000	PLUG	1	
56	HC03720000B4	BAFFLE	2	
57	24341-000160	O-RING, FIX (Φ16)	1	

FIG E005 5220R	INTAKE MANIFOLD	Year/Month 2020/01

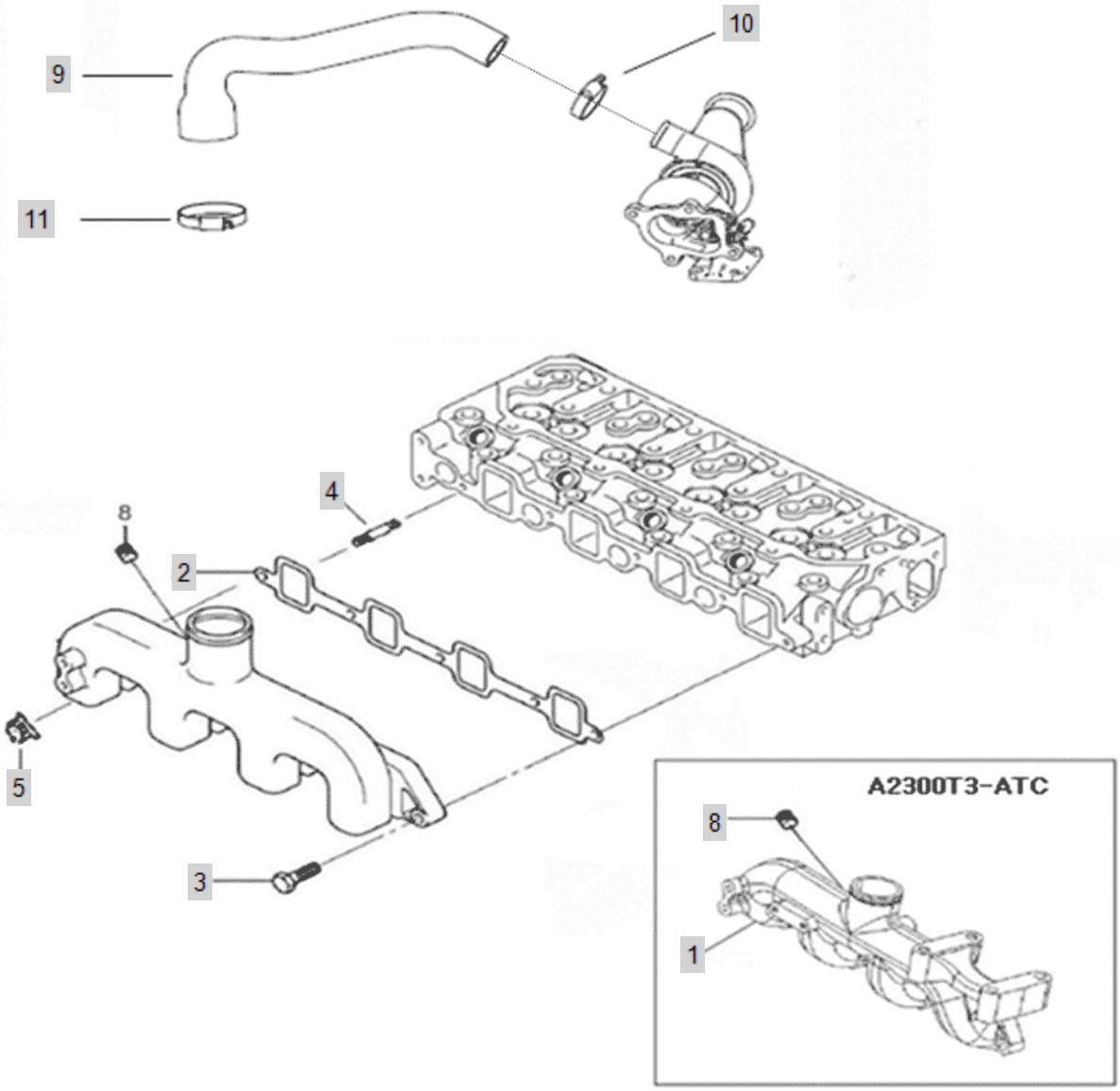

FIG E005 5220R	INTAKE MANIFOLD	Year/Month 2020/01

KeyNo.	Part Number	Part Name	Quantity	Other
1	HRA0500100C1	MANIFOLD,AIRINTAKE	1	
2	HRA0500200A3	GASKET,INTAKE MANIFOLD	1	
3	26106-080302	HEX BOLT, FLANGE	4	
4	26216-080352	BOLT, STUD 8 X 35	1	
5	26367-080002	HEX FLANGE NUT (Φ8)	1	
8	23871-030000	PLUG, PIPE	1	
9	HRU0240200A2	CONNECTION, AIR CROSSOVER	1	
10	23000-048000	CLAMP,HOSE	1	
11	23000-070000	CLAMP,HOSE	1	

FIG E006 5220R	EXHAUST MANIFOLD & SILENCER	Year/Month 2020/01

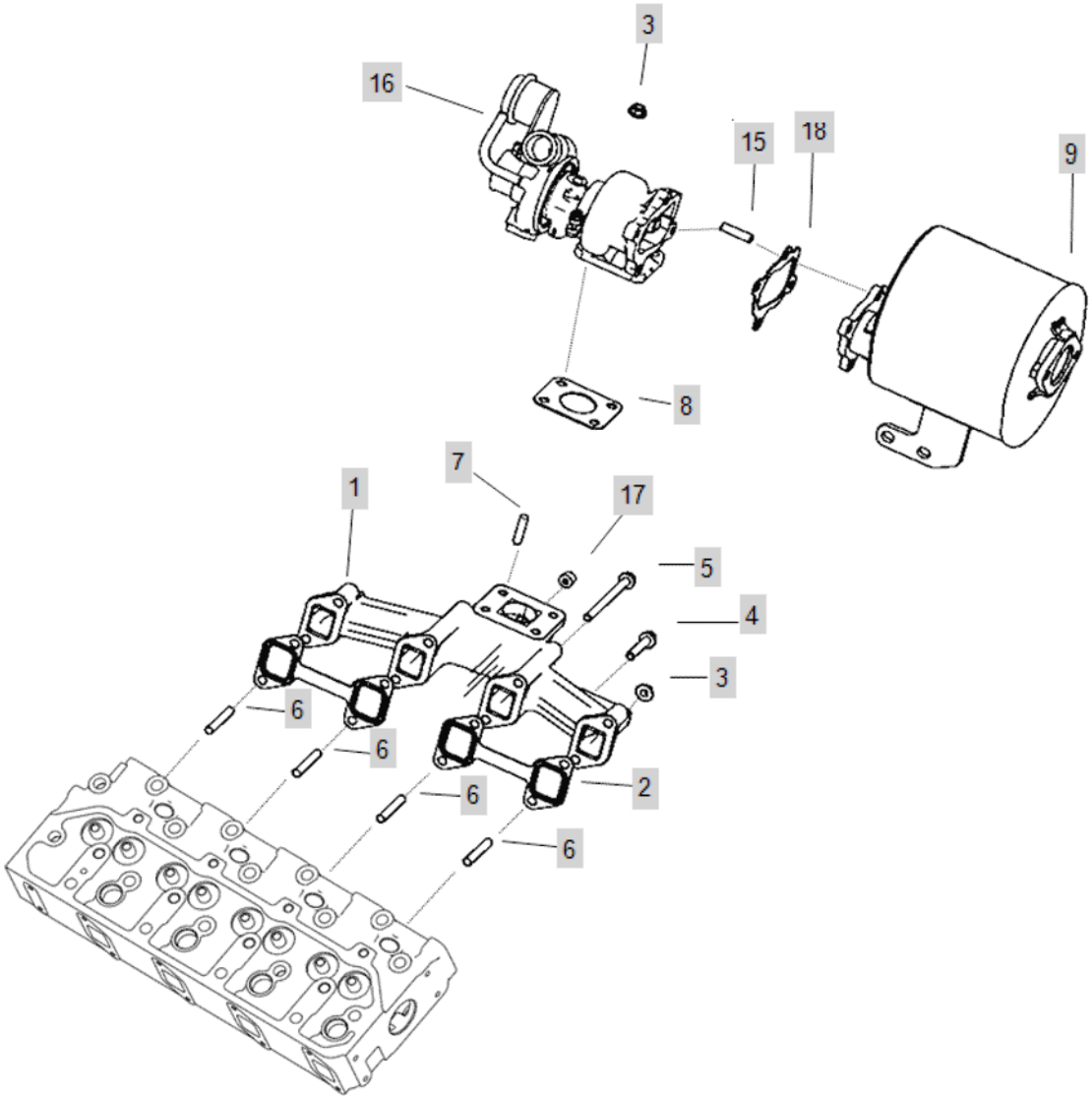

FIG E006 5220R	EXHAUST MANIFOLD & SILENCER	Year/Month 2020/01

KeyNo.	Part Number	Part Name	Quantity	Other
1	HRU0480300A1	MANIFOLD,EXHAUST	1	
2	HRA0600200A3	GASKET,EXHAUSTMANIFOLD	2	
3	26367-080002	HEX FLANGE NUT (Φ8)	12	
4	26106-080402	SCREW,HEXFLANGEHEADCAP	2	
5	26106-080902	SCREW,HEXFLANGEHEADCAP	2	
6	26216-080402	STUD BOLT	4	
7	26213-080222	STUD BOLT	4	
8	HL0706000EB4	GASKET,TURBOCHARGER	1	
9	EA00001879A	MUFFLER	1	
15	26216-080222	Bolt, Stud (8-22)	4	
16	HRU0440101A1	TURBO CHARGER	1	
17	23871-020000	Plug, Pipe	1	
18	HP0524000EA4	GASKET (T/OUT)	1	

FIG E007 5220R	CAM SHAFT & DRIVING GEAR	Year/Month 2020/01

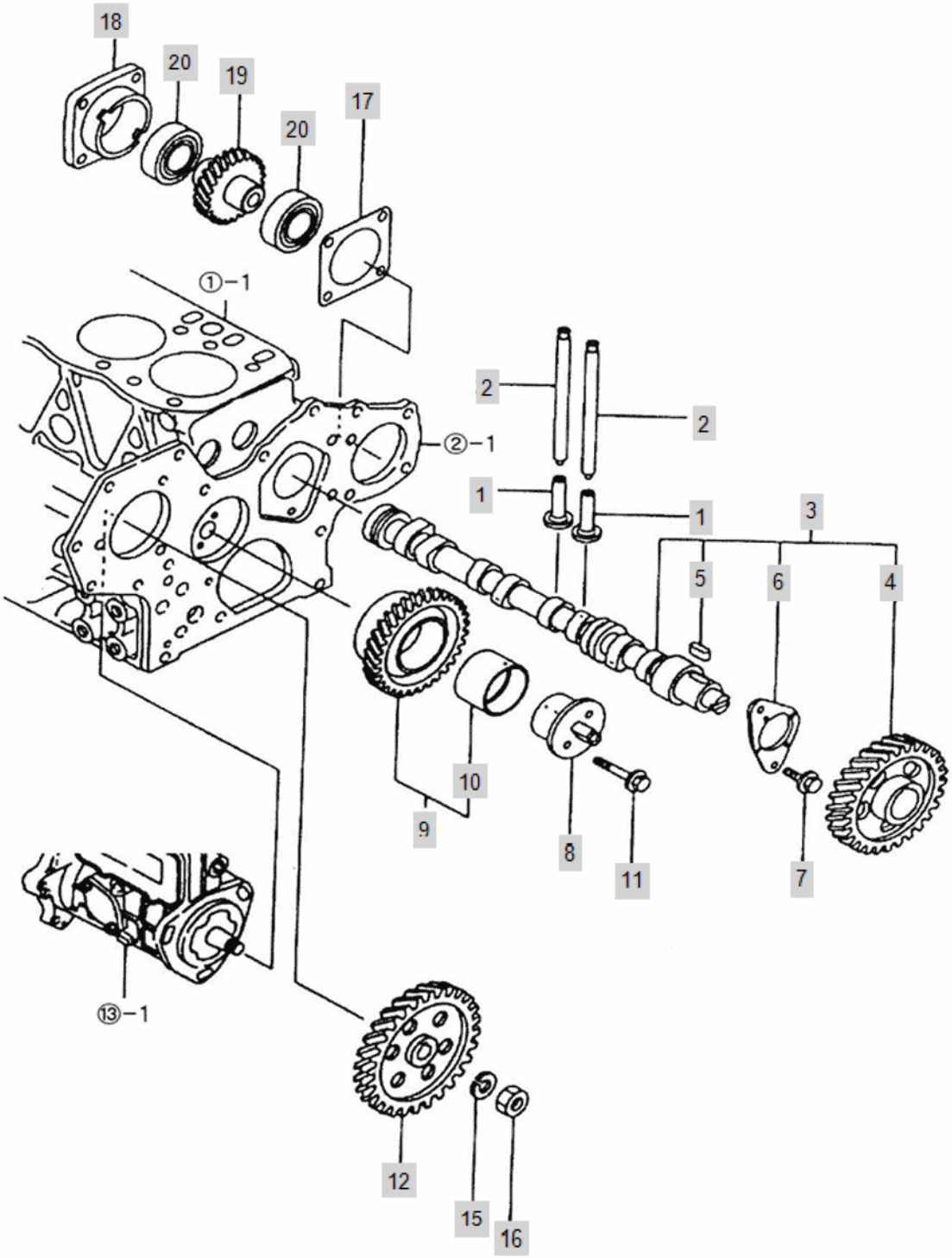

FIG E007 5220R	CAM SHAFT & DRIVING GEAR	Year/Month 2020/01

KeyNo.	Part Number	Part Name	Quantity	Other
1	HH08060000B4	TAPPET,VALVE	8	
2	HRA0700200B4	ROD,PUSH	8	
3	HRA0700300B9	CAM SHAFT ASSY	1	
4	HRA0700302A3	GEAR,CAMSHAFT	1	
5	22512-070140	KEY, SLIDING (07-14)	1	
6	HRA0700304A4	Bearing, Camshaft Thrust	1	
7	26106-080162	SCREW,HEXFLANGEHEADCAP	2	
8	EA00000848B	SHAFT, IDLER	1	
9	HRA0700600A3	GEAR,IDLER	1	
10	HH08120000A4	BUSH	1	
11	HRU0700700A4	BOLT,IDLESHAFT	2	
12	HRA070080DB3	GEAR,FUELPUMP	1	
15	22217-120000	WASHER, SPRING (Φ 12)	1	
16	26716-120002	BOLT,CYLINDER HEAD(B)	1	
17	HK02350000A4	GASKET,ACCDRIVECOVER	1	
18	HK02340000B3	HOUSING, POWER TAKEOFF	1	
19	HRA4000300A3	HYD.PUMP GEAR	1	
20	24101-060064	Bearing, Ball (#6006)	2	

FIG E008 5220R	CRANK SHAFT & PISTON	Year/Month 2020/01

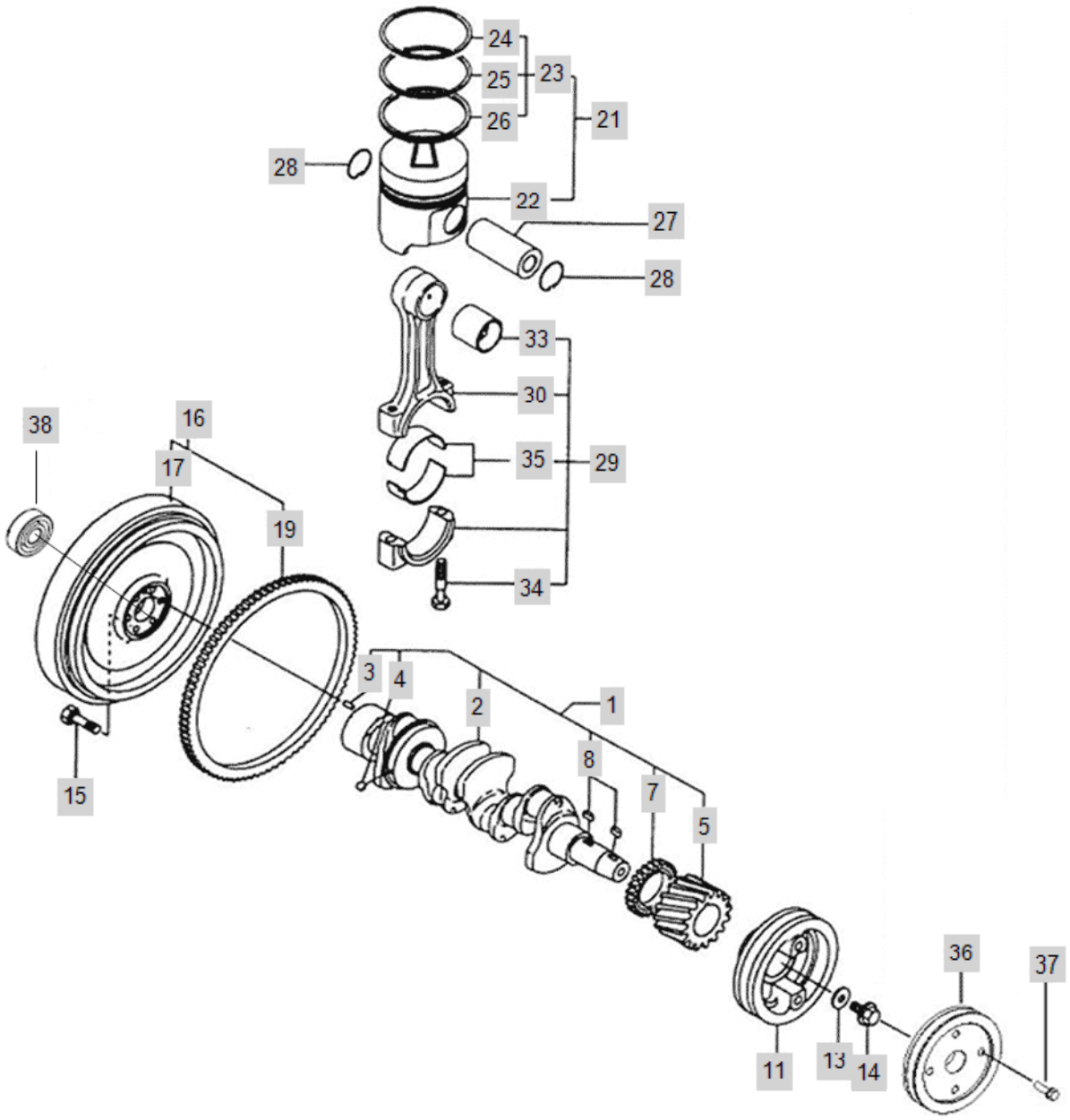

FIG E008 5220R	CRANK SHAFT & PISTON	Year/Month 2020/01

KeyNo.	Part Number	Part Name	Quantity	Other
1	HRA080010KD9	CRANKSHAFT	1	
2	HRA0800101D0	CRANKSHAFT	1	
3	22312-080160	PIN, DOWEL (8-16)	1	
4	24190-080002	Ball, Steel	1	
5	HRA0800200A3	GEAR,CRANK SHAFT	1	
7	HRA0800400A3	GEAR,BALANCERDRIVEN	1	
8	22512-070140	KEY, SLIDING (07-14)	2	
11	HRU0020100B2	PULLEY,CRANKSHAFT	1	
13	HRA0800800A4	WASHER,PLAIN	1	
14	HH09090000A4	SCREW,HEXFLANGEHEADCAP	1	
15	HRC0801000A4	SCREW,HEXAGONHEADCAP	6	
16	HRA084000DB9	FLYWHEEL ASS'Y(IND-4CYL)	1	
17	HRA084001DA1	FLYWHEEL(IND-4CYL)	1	
19	HA07070000A2	RING GEAR,FLYWHEEL	1	
21	HRA0801300A9	PISTON ASS'Y	4	
22	HRA0801301B1	PISTON,ENGINE	4	
23	HRA0801302B9	RINGSET,PISTON	4	
24	HRA0801303A4	RING,1STCOMPRESSIONPISTON	4	
25	HRA0801304B4	RING,2NDCOMPRESSIONPISTON	4	
26	HRA0801305B4	RING,OILPISTON	4	
27	HK27150000A4	PIN,PISTON	4	
28	HA08070000A4	RING,RETAINING	8	
29	HRA0801600A9	ROD,ENGINECONNECTING	4	
30	HRA0801601A2	ROD,ENGINECONNECTING	4	
33	HRA0801603A4	BUSHING	4	
34	HRA0801602A4	SCREW,HEXAGONHEADCAP	8	
35	HRA0801700A3	BEARING,CONNECTINGROD	8	
38	24104-063024	BALL BEARING (#6302UU)	1	

FIG E010 5220R	BALANCER	Year/Month 2020/01

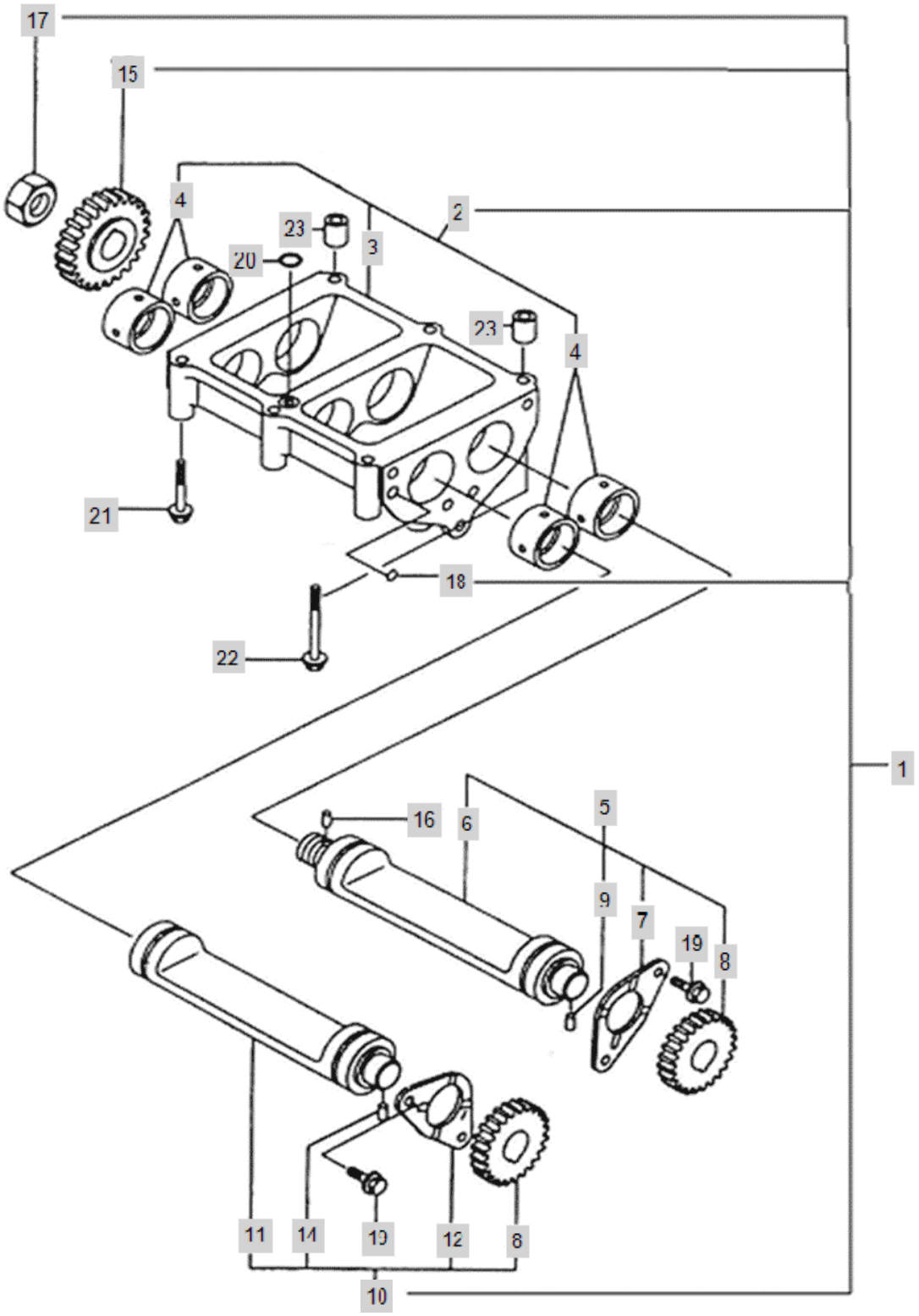

FIG E010 5220R	BALANCER	Year/Month 2020/01

KeyNo.	Part Number	Part Name	Quantity	Other
1	HRA1000100A1	BALANCER	1	
2	HRA1000101A9	BALANCER CASE ASS'Y	1	
3	HRA1000109A0	CASE,BALANCER	1	
4	HRA1000102A3	BUSH,BALANCERSHAFT	4	
5	HRA1000200A9	SHAFTASS'Y(A),BALANCER	1	
6	HRA1000201A3	SHAFT(A),BALANCER	1	
7	HRA1000202A4	BEARING,THRUST	1	
8	HRA100203A3	GEAR B, BALANCER	2	
9	22312-060080	PIN, DOWEL (6-08)	1	
10	HRA1000300A9	SHAFTASS'Y(B),BALANCER	1	
11	HRA1000301A3	SHAFT(B),BALANCER	1	
12	HRA1000202A4	BEARING,THRUST	1	
14	22312-060080	PIN, DOWEL (6-08)	1	
15	HRA1000204A3	GEAR(A),BALANCER	1	
16	22312-060080	PIN, DOWEL (6-08)	1	
17	HRA1000500A4	NUT,BALANCERGEAR(A)	1	
18	24190-080002	Ball, Steel	2	
19	26106-080162	SCREW,HEXFLANGEHEADCAP	4	
20	24311-000140	O-RING, DYNAMIC (Φ14)	1	
21	26106-080652	SCREW,HEXFLANGEHEADCAP	4	
22	26106-080752	SCREW,HEXFLANGEHEADCAP	2	
23	HRA1000700A4	PIN,GUIDE	2	

FIG E011 5220R	LUB. OIL SYSTEM	Year/Month 2020/01

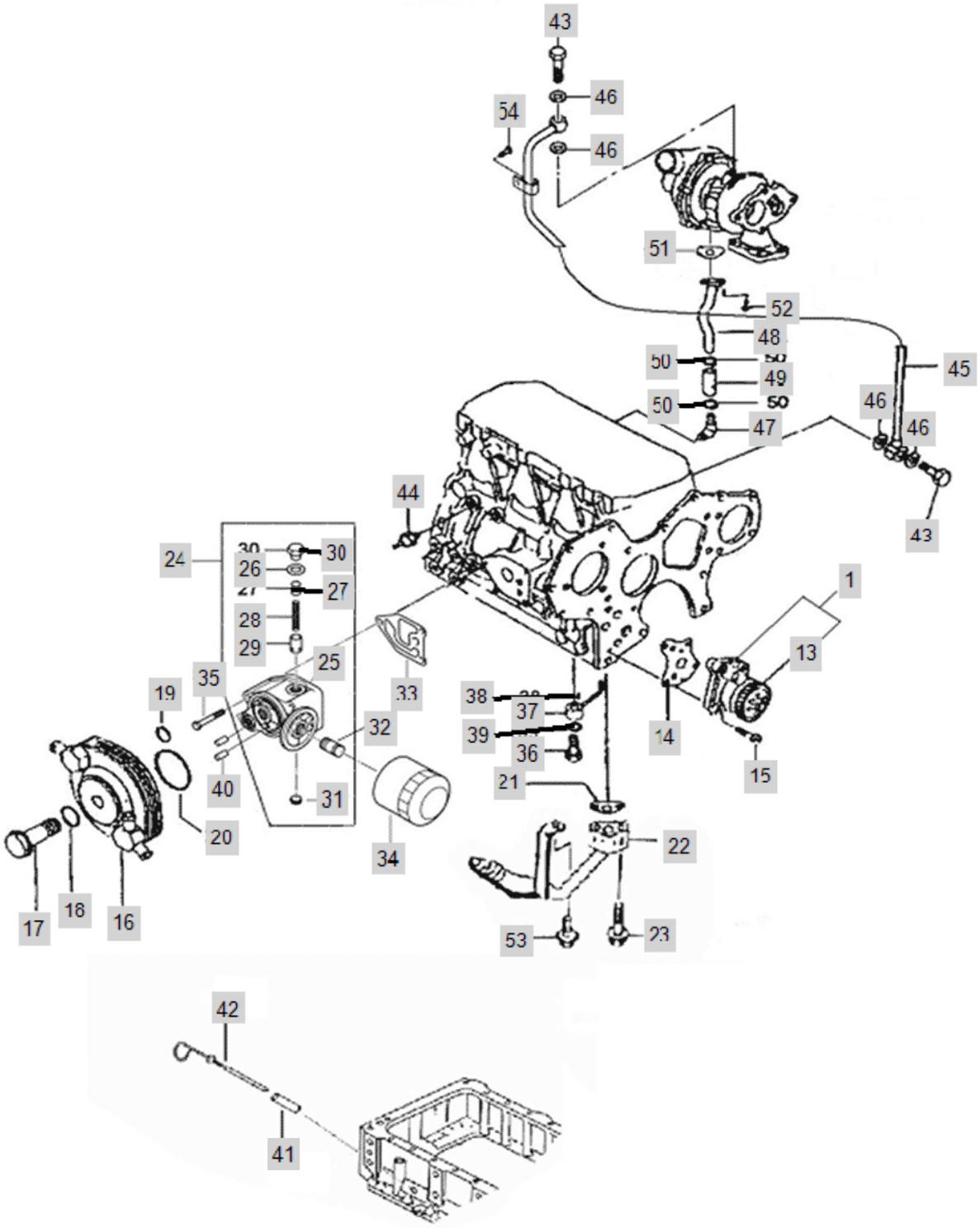

FIG E011 5220R	LUB. OIL SYSTEM	Year/Month 2020/01

KeyNo.	Part Number	Part Name	Quantity	Other
1	HRA1100109A9	PUMP, LUBRICATING OIL	1	
13	HRA1100112A3	GEAR,LUBRICATINGOILPUMP	1	
14	HRA1100600A4	GASKET,LUBOILPUMP	1	
15	26450-060252	SCREW,SOCKETHEADCAP	4	
16	HRC1101600B2	COOLER,OIL	1	
17	HRC1101700A4	SCREW,HEXAGONHEADCAP	1	
18	24311-000210	O-RING, DYNAMIC (Φ21)	1	
19	24311-000200	O-RING, DYNAMIC (Φ20)	1	
20	24321-000070	ORING497-7	1	
21	HRA1100700A4	GASKET,OILPAN	1	
22	HRA1100800A2	PIPEASSY,OILINTAKE	1	
23	26106-080352	SCREW,HEXFLANGEHEADCAP	2	
24	HRC1100900B1	HEAD,LUBOILFILTER	1	
25	HRC1100901B1	HEAD,LUBOILFILTER	1	
26	24311-000210	O-RING, DYNAMIC (Φ21)	1	
27	HH10090000A4	SHIM	5	
28	HH10140000B4	SPRING,COMPRESSION	1	
29	HH10080000B4	VALVE,PRESSUREREGULATOR	1	
30	HH10130000B4	RETAINER,SPRING	1	
31	23871-020000	Plug, Pipe	1	
32	HH11030000B4	RETAINER,PRXLMGVALVE	1	
33	HRC1101000B4	GASKET,FILTERHEAD	1	
34	HRA1102000A3	FILTER, ENGINE OIL	1	
35	26106-080652	SCREW,HEXFLANGEHEADCAP	3	
36	HRC1102000A4	CHECK VALVE ASS'Y	4	
37	HRC1101900A3	NOZZLE,PISTON COOLING	4	
38	22351-030010	PIN, SPRING (3-01)	4	
39	23414-080000	WASHER, PLAIN (Φ8)	4	
40	22312-060080	PIN, DOWEL (6-08)	2	
41	EA00002292A	TUBE, OIL GAUGE	1	
42	EA00002293A	OIL GAUGE	1	
43	HA09220000A4	SCREW,BANJOCONNECTOR	2	
44	HA09250000A3	SWITCH,OILPRESSURE	1	
45	HRU043010DA3	TUBE, TURBO OIL SUPPLY	1	
46	23414-100000	PLAIN WASHER (D10)	4	
47	HRF1105000A4	ELBOW,PLAIN UNION	1	
48	HRU043080DB3	TUBE,TURBO OIL DRAIN	1	
49	HRU0430900C3	HOSE, PLAIN	1	
50	23080-020000	CLAMP, V BAND	2	
51	HP09350000A4	GASKET,OILDRAIN	1	
52	26106-060182	Bolt, Hexa (6-18)	2	
53	26106-080162	SCREW,HEXFLANGEHEADCAP	1	
54	26106-080122	Bolt, Hexa (8-12)	1	

FIG E012 5220R	COOLING SYSTEM	Year/Month 2020/01

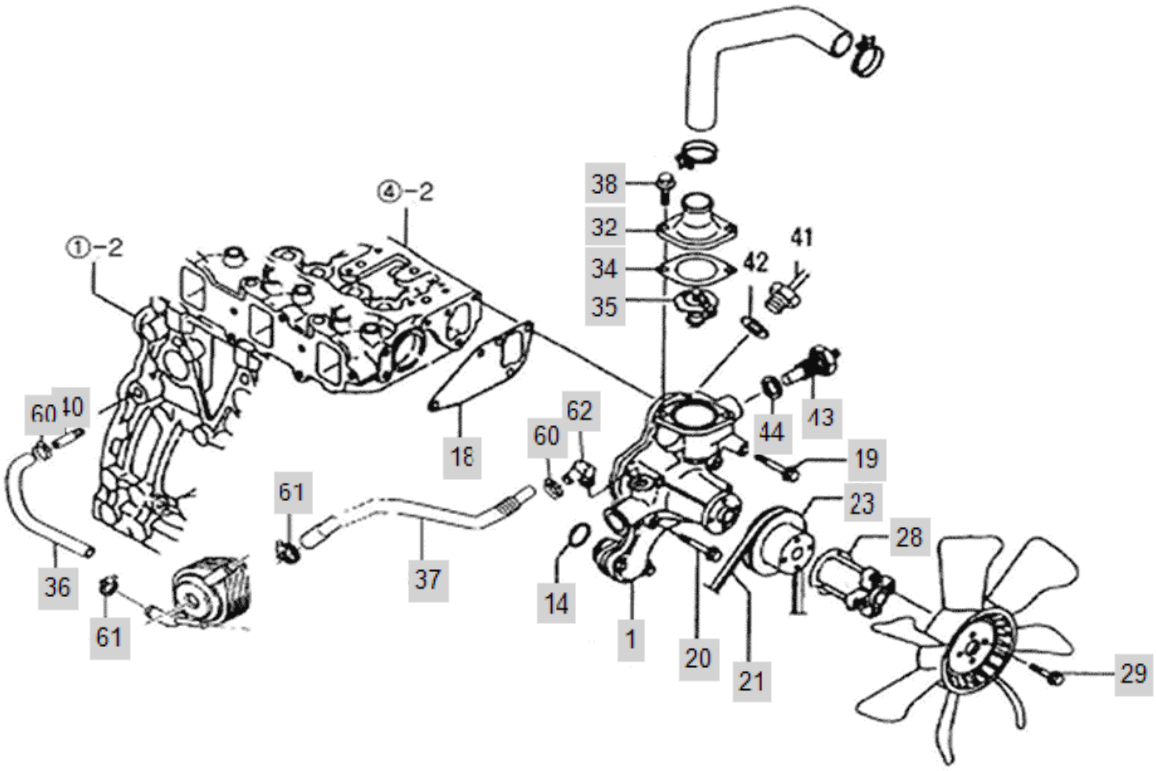

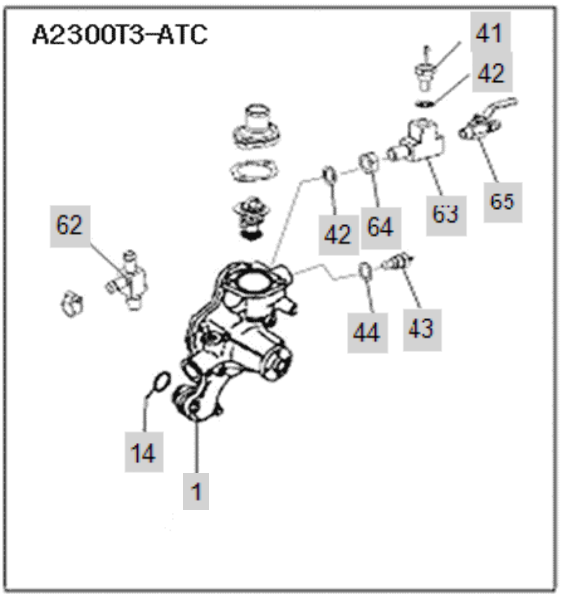

FIG E012 5220R	COOLING SYSTEM	Year/Month 2020/01

KeyNo.	Part Number	Part Name	Quantity	Other
1	HRA1200100D1	COOLANT PUMP ASSY	1	
14	24341-000280	O-RING, FIX (Φ28)	1	
18	HRA1200200A3	GASKET,WATERPUMP	1	
19	26106-080552	HEX FLANGE BOLT (D80)	3	
20	26106-080602	SCREW,HEXFLANGEHEADCAP	1	
21	HRA1200600B4	BELT,V (A40.5") -> EA00002554A	1	
23	HK10120000A4	PULLEY,FAN	1	
28	HLT1208000A3	SPACER,FAN	1	
29	26106-081052	SCREW,HEXFLANGEHEADCAP	4	
32	HC09160000B4	COVER, THERMOSTAT	1	
34	HA10670000B4	GASKET,THERMOSTAT	1	
35	HK10030000A3	THERMOSTAT	1	
36	HRC1205100A4	HOSE,PLAIN	1	
37	HRC1205200A4	HOSE,PLAIN	1	
38	26106-080182	SCREW,HEXFLANGEHEADCAP	2	
40	HRC1204000A4	NIPPLE,PLAINPIPE	1	
41	HH12210000A3	SENSOR,GLOWPLUG	1	
42	23414-160000	WASHER,SEALING	1	
43	HH12190000A3	WATER TEMP SENSOR	1	
44	23414-100014	PACKING,COPPER	1	
60	23000-022000	CLAMP,HOSE	2	
61	23000-025000	CLAMP,HOSE	2	
62	CEE2080000A4	ELBOW,PLAINUNION	1	

FIG E013 5220R	FUEL INJECTION PUMP	Year/Month 2020/01

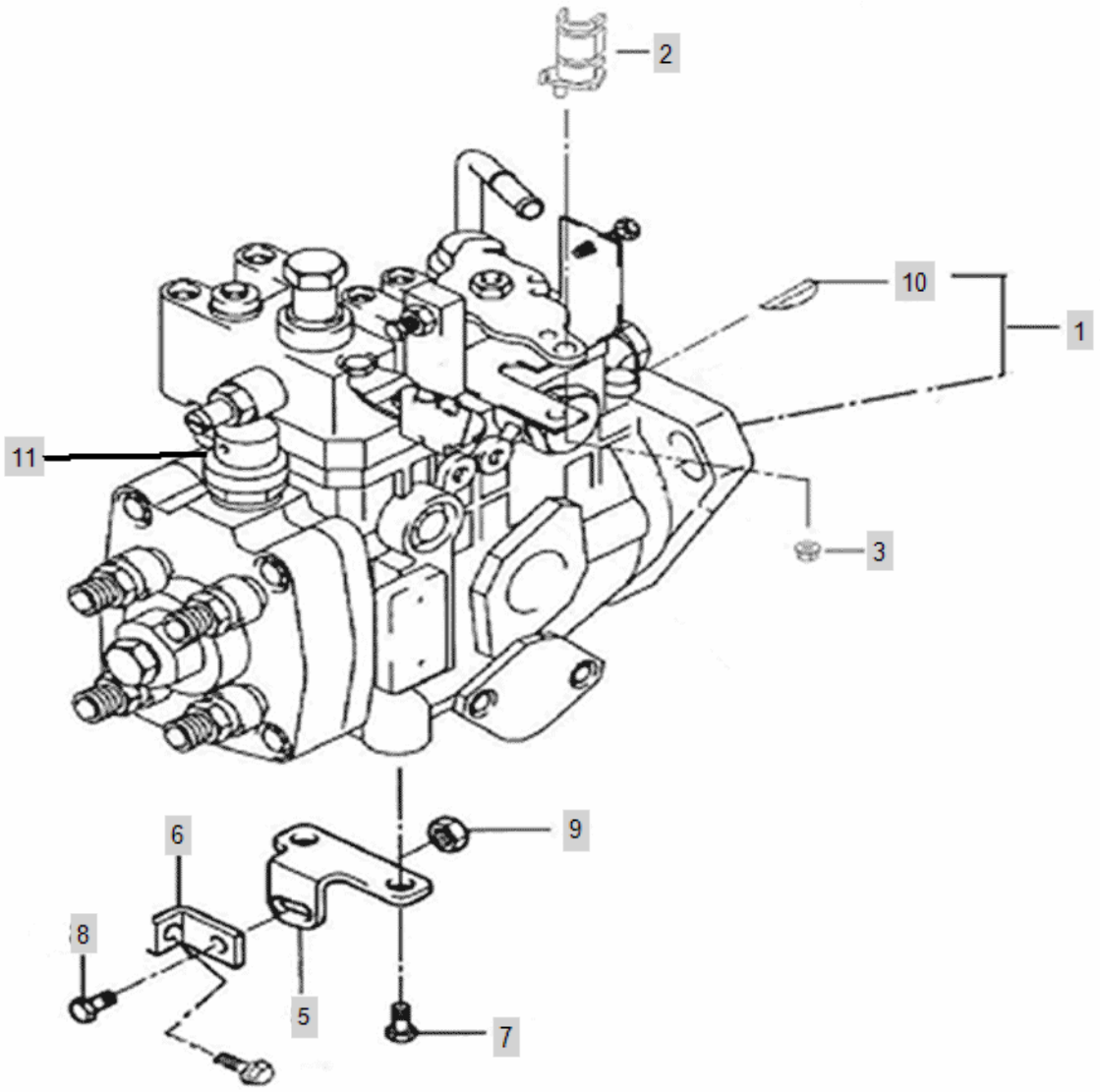

FIG E013 5220R	FUEL INJECTION PUMP	Year/Month 2020/01

KeyNo.	Part Number	Part Name	Quantity	Other
1	EA00000786A	FUEL INJECTION PUMP (A2300T1)	1	
2	EA00002101A	LEVER, HOOK, ACCEL	1	
3	26367-060002	Nut, Hexa (Φ6)	1	
5	HRA130020DA4	BRACKET(B),PUMP	1	
6	HRA130030DA4	BRACKET(A),PUMP	1	
7	26116-100162	SCREW,HEXAGONHEADCAP	2	
8	26106-080162	SCREW,HEXFLANGEHEADCAP	2	
9	26367-080002	HEX FLANGE NUT (Φ8)	1	
10	HRA0702100A4	KEY,PLAINWOODRUFF	1	
11	HRU0170210A9	VALVE,FUELSTOP	1	

FIG E015 5220R	FUEL INJECTION SYSTEM & VALVE	Year/Month 2020/01

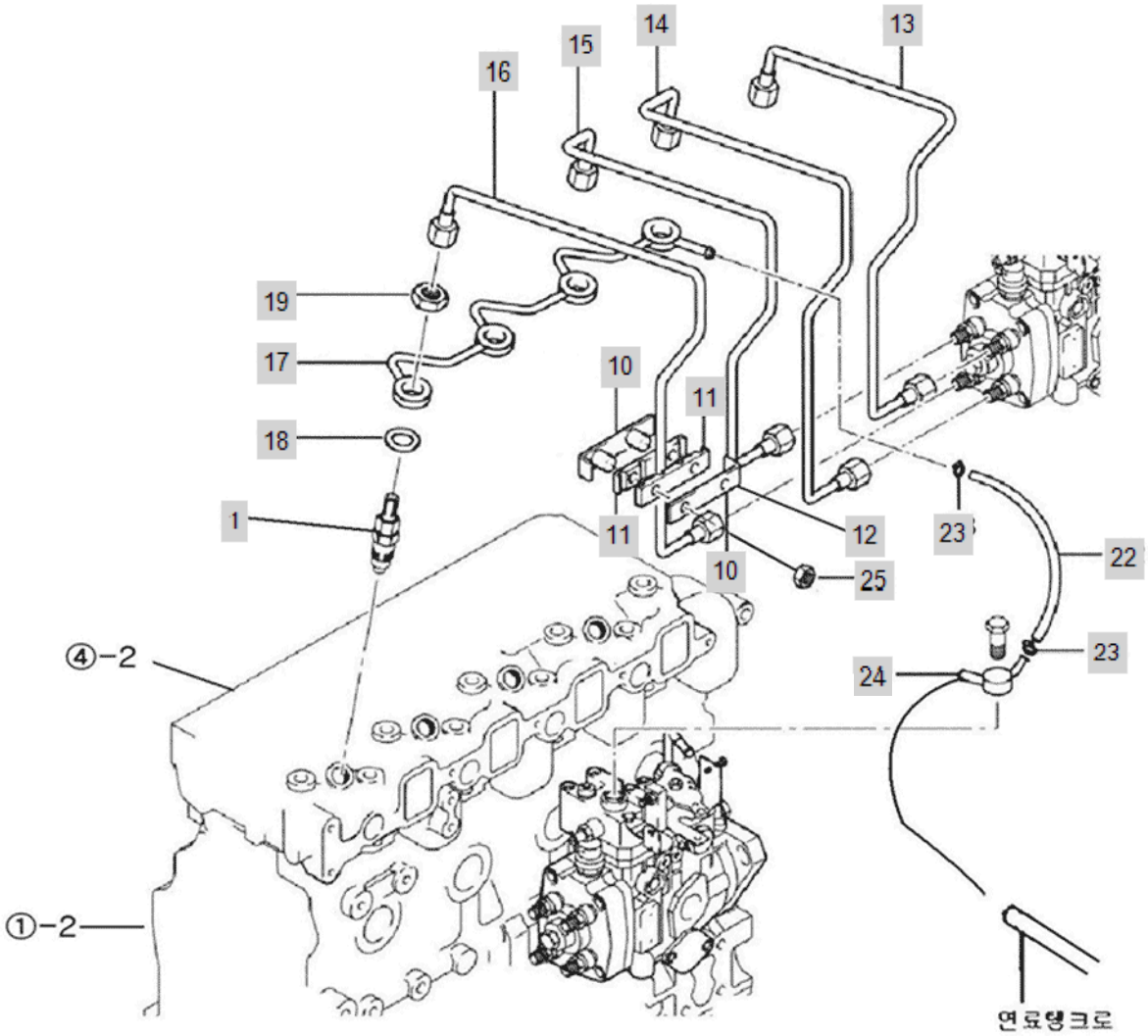

FIG E015 5220R	FUEL INJECTION SYSTEM & VALVE	Year/Month 2020/01

KeyNo.	Part Number	Part Name	Quantity	Other
1	EA00000642A	INJECTOR	4	
10	HRA1502600B4	BRACKET,PIPE	1	
11	HRA1502700A4	RUBBER,BRACKET	2	
12	HRA1502800A4	CLAMP,TUBE	1	
13	HRA150050DB0	PIPE ASSY, FUEL SUPPLY A	1	
14	HRA150060DB0	PIPE ASSY, FUEL SUPPLY (B)	1	
15	HRA150070DBO	FUEL PIPE ASS'Y(C)	1	
16	HRA150080DB0	PIPE ASSY, FUEL SUPPLY D	1	
17	HRA1500900C3	PIPE ASSY, FUEL RETURN	1	
18	HK13440000A4	GASKET,FUELMANIFOLD	4	
19	HK13450000A4	NUT,REGULARHEXAGON	4	
22	EA00000700A	TUBE, FUEL DRAIN	1	
23	23080-010000	CLAMP, V BAND	2	
24	HRA1502400B4	CONNECTOR,BANJO	1	
25	26367-060002	Nut, Hexa (Φ6)	2	

FIG E017 5220R	STARTING MOTOR	Year/Month 2020/01

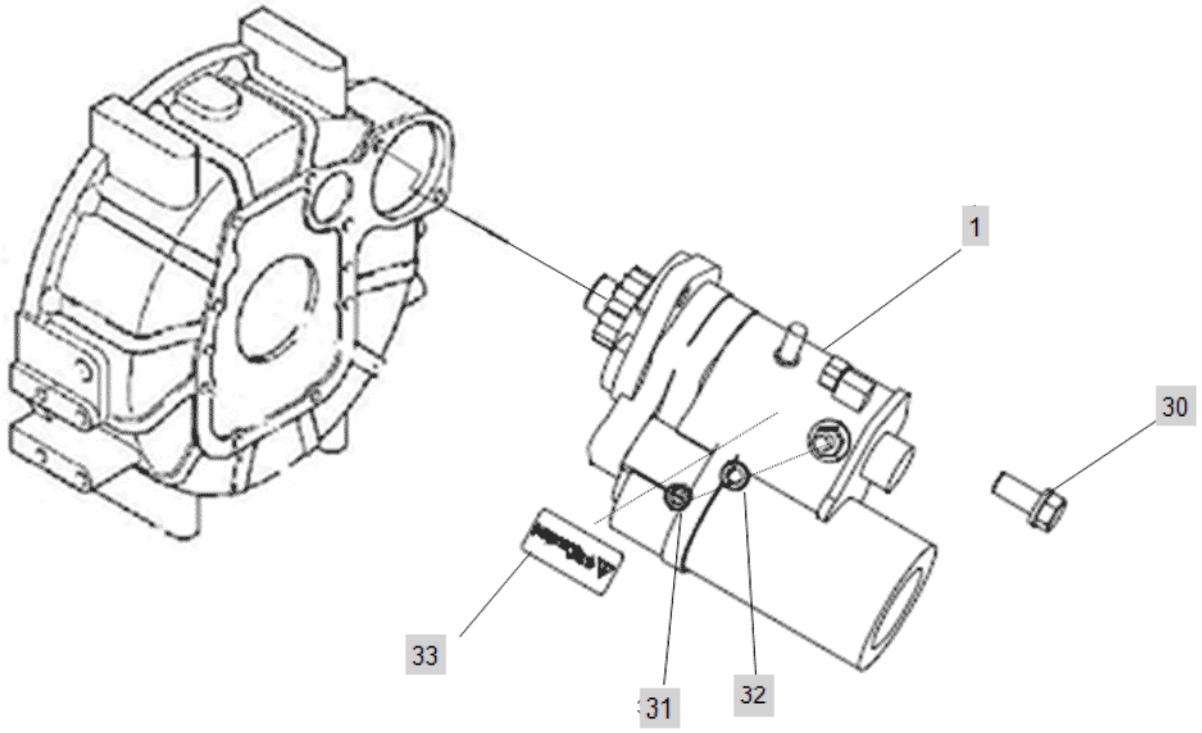

FIG E017 5220R	STARTING MOTOR	Year/Month 2020/01

KeyNo.	Part Number	Part Name	Quantity	Other
1	HRD1700100A1	STARTING MOTOR	1	
30	26013-120282	SCREW,CAPTIVEWASHERCAP	2	
31	26716-080002	NUT,HEX (D8)	1	
32	22217-080000	WASHER, SPRING (Φ 08)	1	
33	EA00001492A	NAME PLATE, STARTING MOTOR	1	

FIG E018 5220R	GENERATOR & ELECTRIC DEVICE	Year/Month 2020/01

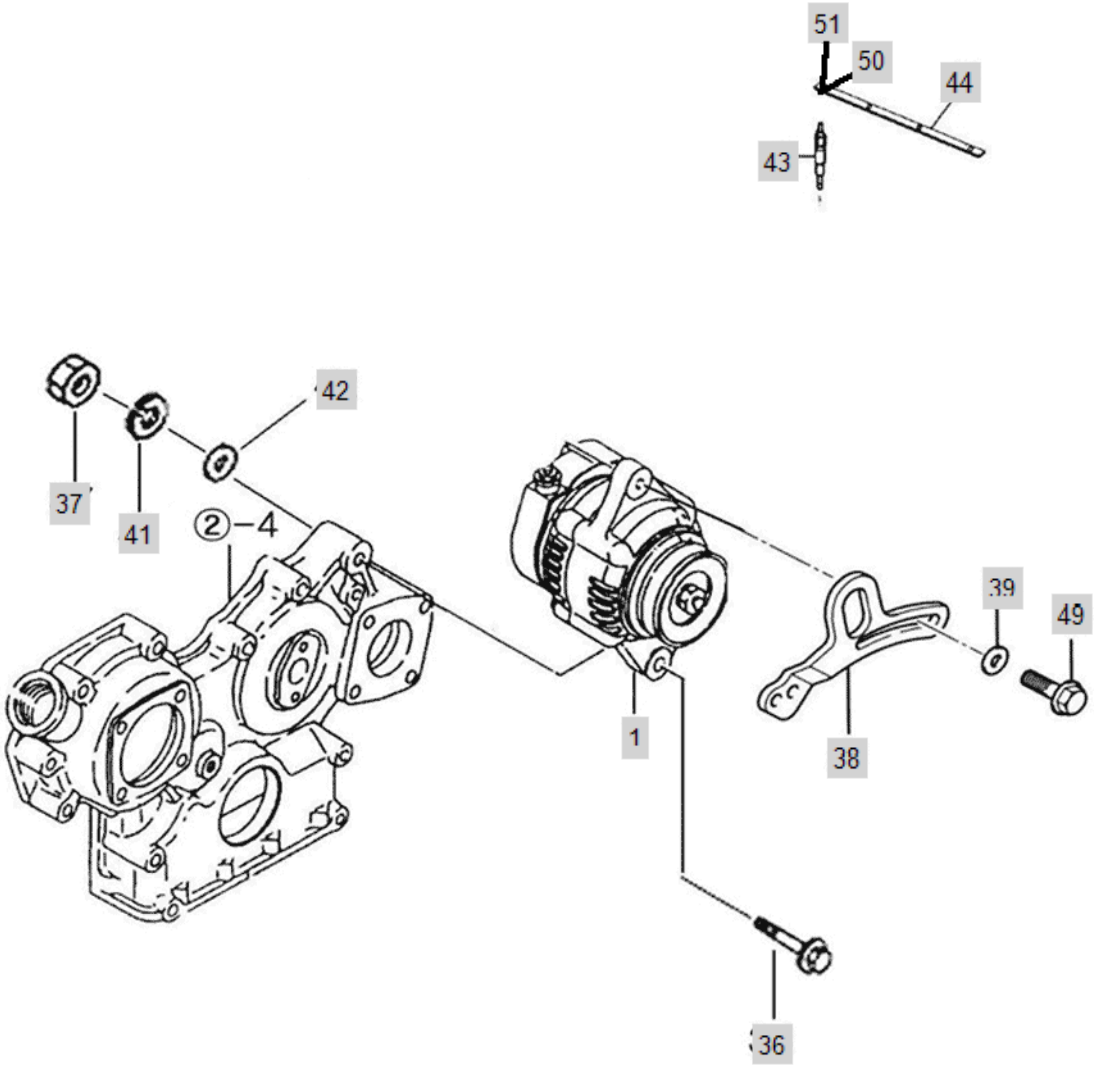

FIG E018 5220R	GENERATOR & ELECTRIC DEVICE	Year/Month 2020/01

KeyNo.	Part Number	Part Name	Quantity	Other
1	HN4101000DA2	ALTERNATOR (12V-50A)	1	
36	HRA1803500A4	BOLT,ALTERNATOR	1	
37	26716-080002	NUT,HEX (D8)	1	
38	HN41020000A3	BRACKET,ALTERNATOR	1	
39	RR15170000A4	WASHER 8.5X20X3.2	1	
41	22217-080000	WASHER, SPRING (Φ 08)	1	
42	22127-080000	WASHER, PLAIN (D80)	1	
43	HK15170000A4	PLUG, PREHEAT	4	
44	HRA1801300A4	CONNECTOR,ELECTRICAL	1	
49	26013-080302	HEX BOLT W/WASHER	1	
50	HA00000920A	HARNESS H	1	
51	HA00000861C	HARNESS A	1	

FIG S001 5220R	LEVER ACCELERATOR	Year/Month 2020/01

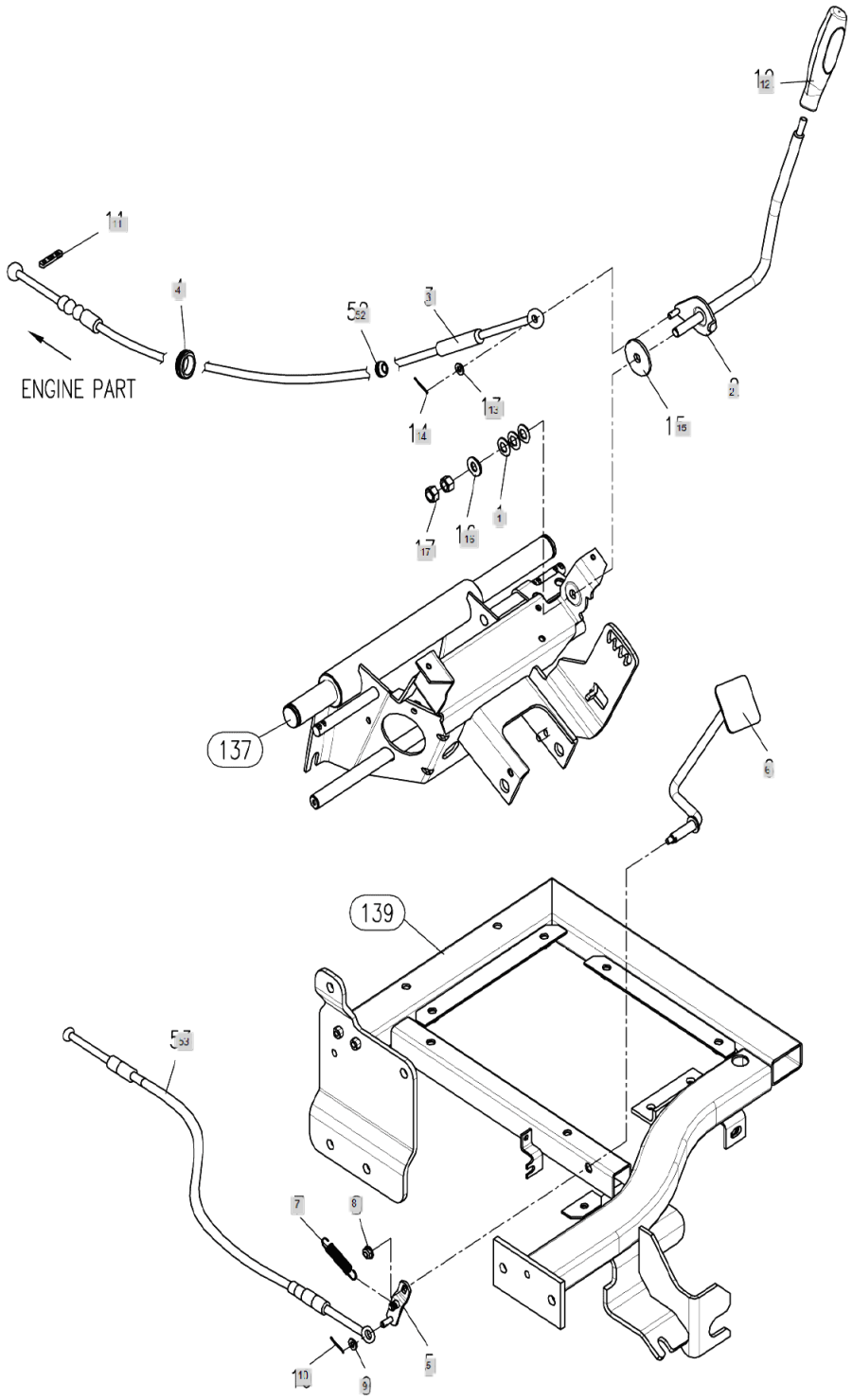

FIG S001 5220R	LEVER ACCELERATOR	Year/Month 2020/01

KeyNo.	Part Number	Part Name	Quantity	Other
1	TC45010000A4	SPRINGWASHER10	3	
2	TA00022978A	ACCELERATOR LEVER	1	
3	TC45080000A4	MATT	1	
4	TC45070000A4	MATT	1	
5	TA00020586A	ARM	1	
6	TA00017893C	ACCELEATOR PADAL ASS'Y	1	
7	26367-060002	Nut, Hexa (Φ6)	1	
8	TT98200000A4	RETURNSPRING	1	
9	22137-060000	WASHER , PLAIN	1	
10	22417-160180	PIN , COTTER (1-18)	1	
11	TC45040000A4	RUBBER	1	
12	TA00056003A	KNOD, ACCELERATOR	1	
12-1	TA00015801B	KNOB, ACCELERATOR	1	
13	22137-060000	WASHER , PLAIN	1	
14	22417-160180	PIN , COTTER (1-18)	1	
15	TC45060000A4	FRICTIONPLATE	1	
16	22137-100000	WASHER, PLAIN (Φ 10)	1	
17	26716-100002	Nut, Hexa (Φ10)	2	
52	TC45410000B3	WIRE,ACCELERATOR	1	
53	TC46410000C3	WIRE, ACCELERATOR PEDAL	1	

FIG S002 5220R	STEERING COLUMN	Year/Month 2020/01

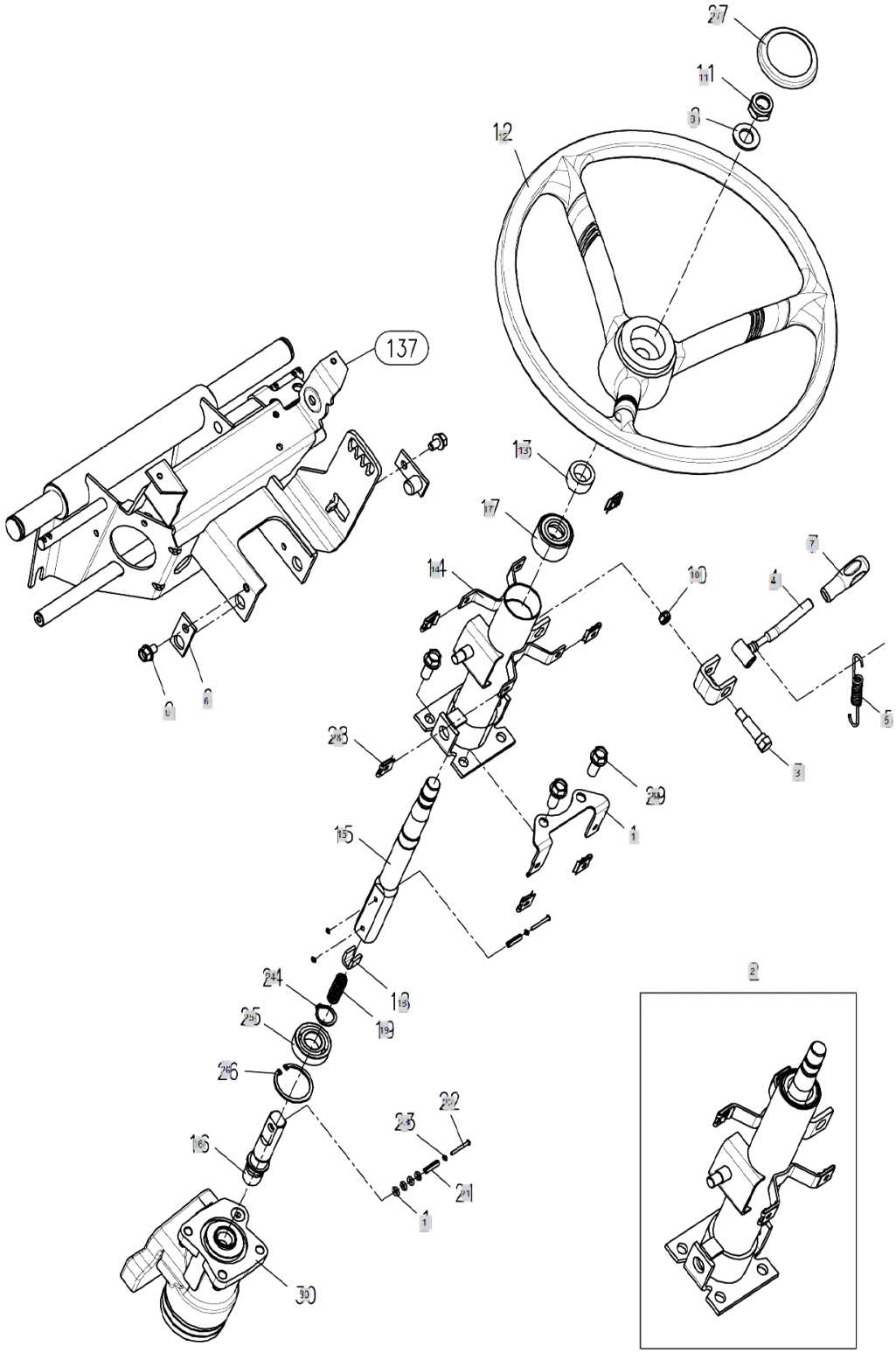

FIG S002 5220R	STEERING COLUMN	Year/Month 2020/01

KeyNo.	Part Number	Part Name	Quantity	Other
1	TC65010000A4	BRACKET(COLUMCOVERR)	1	
2	NT01410000A2	COLUMASS`Y	1	
3	TC65030000A4	TILTLEVERPIN	1	
4	TC65040000A4	TILTLEVER	1	
5	TC65050000A4	TILTSPRING	1	
6	TC65060000A4	TILTPINASS'Y	2	
7	TA00015785A	LEVER, STAND	1	
8	22137-160000	WASHER, PLAIN (Φ 16)	1	
9	26106-080122	Bolt, Hexa (8-12)	2	
10	26347-080002	Unut	1	
11	26357-160002	NUT	1	
12	TZ29030000A1	STEERING WHEEL	1	
13	TC65130000A4	COVER,SHAFT	1	
14	TC65020100A2	STEERINGCLUMN	1	
15	FT29150000A3	STEERINGSHAFT	1	
16	TC65020300A9	STEERINGSHAFT1	1	
17	TC65020400A9	COLUMNBUSH	1	
18	TC65020500A4	LINER	1	
19	TC65020600A9	SPRING,COIL	1	
20	24311-000060	O-RING, DYNAMIC (Φ6)	4	
21	22351-050020	PIN, SPRING (5-20)	2	
22	22621-300260	RIVET	2	
23	22137-030000	WASHER, PLAIN (Φ 03)	4	
24	22242-000200	SNAP RING, SHAFT (Φ 20)	1	
25	24107-060044	Bearing, Ball (#6004) Dubble Cap	1	
26	22252-000420	RING, CIRCLIP (Φ 42)	1	
27	TA00026432A	STEERING WHEEL CAP (BRANSON)	1	
28	TTD7110000A4	SPEEDNUTNS5008	6	
29	26136-100252	SCREW, HEX FLANGE HEAD CAP	3	
30	NT33011000A3	PST VALVE ASSY	1	

FIG S003 5220R	SHUTTLE ASSY	Year/Month 2020/01

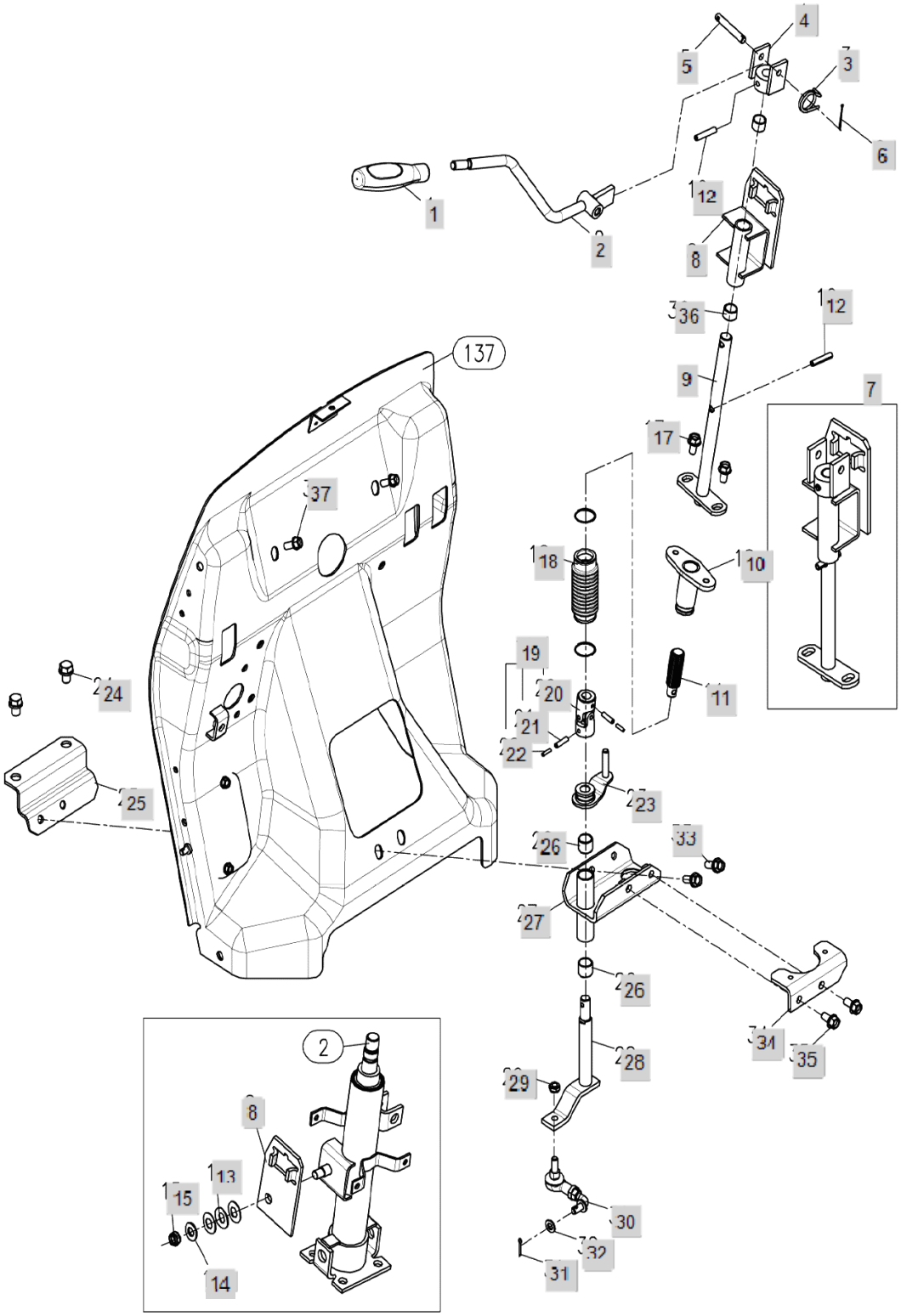

FIG S003 5220R	SHUTTLE ASSY	Year/Month 2020/01

KeyNo.	Part Number	Part Name	Quantity	Other
1	TA00056013A	KNOB (LEVER SHUTTLE)	1	
1-1	TA00015799B	KNOB, SHUTTLE LEVER	1	
2	NT03010000C1	REVERSER LEVER	1	
3	TC94090000A4	RETURNSPRING(F-R)	1	
4	TC94040300A3	HOLDER,REVERSERLEVER	1	
5	TC94050000A4	PIN(8*52)	1	
6	22417-200300	PIN , COTTER (2-30)	1	
7	TA00002840B	REVERSER BRACKET ASSY	1	
8	TA00003045A	BRACKET ASS'Y	1	
9	TA00002841A	COUPLING SHAFT	1	
10	TA00003047A	COUPLING -> TA00002840A	1	
11	TA00003049A	SHAFT(INSIDE)-> TA00002840A	1	
12	22351-060032	PIN, SPRING (6-32)	2	
13	TC94060000A4	PRING12	3	
14	22137-100000	WASHER, PLAIN (Φ 10)	1	
15	26347-100002	U-NUT	1	
17	26106-080162	SCREW,HEXFLANGEHEADCAP	2	
18	TA00017481A	JOINT BOOT	1	
19	TC94020300A4	JOINT ASSY	1	
20	TC94020300A4	JOINT ASSY	1	
21	22351-030020	PIN, SPRING (3X20)	2	
22	22351-050020	PIN, SPRING (5-20)	2	
23	TA00017493A	JOINT ARM ASS'Y	1	
24	26013-100252	SCREW,CAPTIVEWASHERCAP	2	
25	TA00018462A	FIX BRACKET ASS'Y	1	
26	24550-016150	DRYBUSH	2	
27	TA00017490A	BRACKET REVERSER SHAFT	1	
28	TA00017487A	SHAFT, REVERSER	1	
29	26347-080002	Unut	1	
30	TA00002832A	ROD ASS'Y(F-R)	1	
31	22417-250200	PIN , COTTER (2-20)	1	
32	22117-080000	WASHER, PLAIN (Φ 08)	1	
33	26106-080202	SQR FLANGE BOLT	2	
34	TA00017502A	SW BRACKET ASS'Y	1	
35	26106-080162	SCREW,HEXFLANGEHEADCAP	2	
36	24550-015120	DRYBUSH	2	
37	26106-100202	HEX BOLT, (10-20)	2	

FIG S004 5220R	FRONT AXLE BRACKET	Year/Month 2020/01

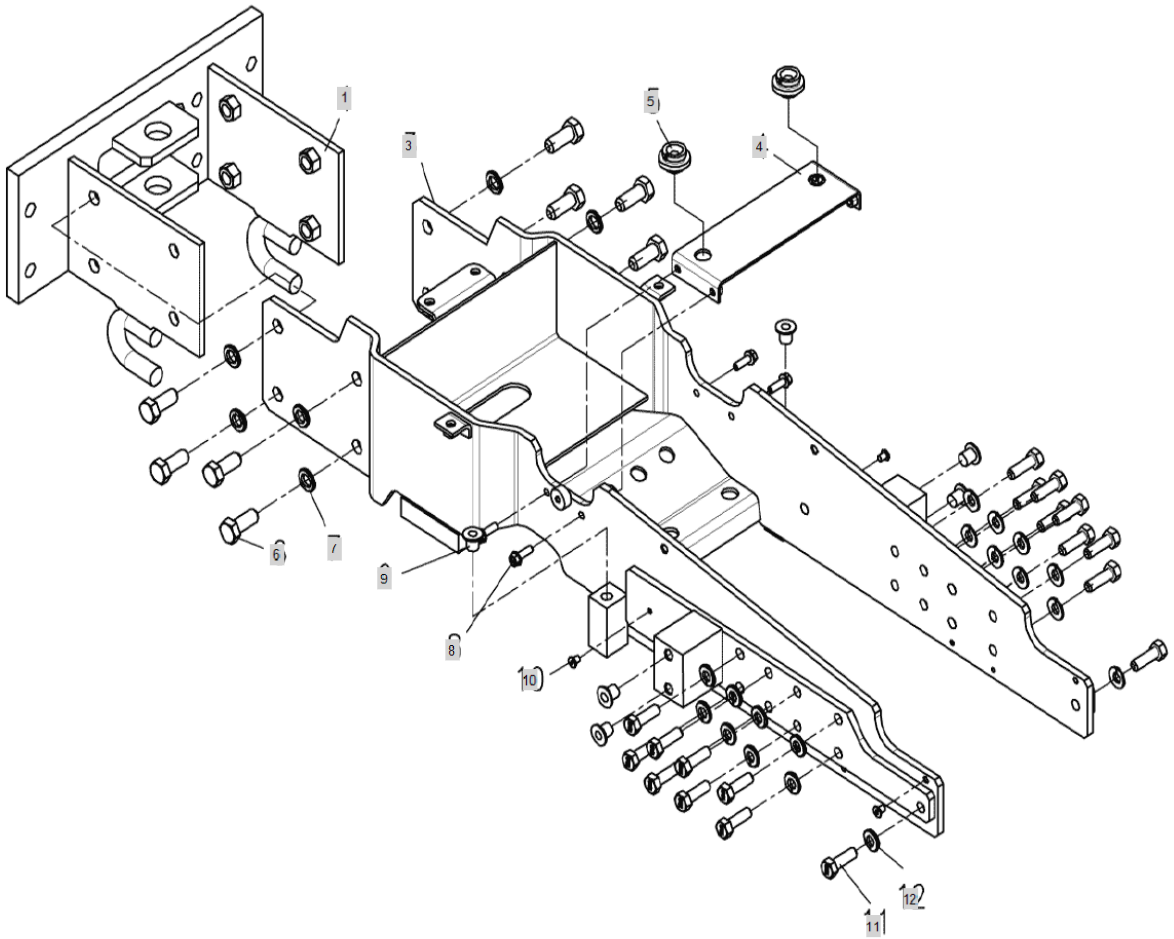

FIG S004 5220R	FRONT AXLE BRACKET	Year/Month 2020/01

KeyNo.	Part Number	Part Name	Quantity	Other
1	TA00001548C	FRONT HITCH ASSY	1	
3	TA00026011A	4520R,5020R BRACKET ASS'Y FRONT AXLE	1	
4	TA00024173A	BRACKET ASSY	1	
5	HRA1203300A4	RUBEER, VIBRATION PROOF	2	
6	26116-160402	BOLT	8	
7	22217-160000	WASHER, SPRING (Φ 16)	8	
8	26106-080252	SCREW,HEXFLANGEHEADCAP	4	
9	FB08090000A4	PLUG	4	
10	TB26060000A4	PLUGRUBBER	6	
11	TT08230000A4	BOLT	18	
12	TT08220000A4	LOCKSPRINGWASHER	18	

FIG S009 5220R	CENTER PIN SUPPORTER	Year/Month 2020/01

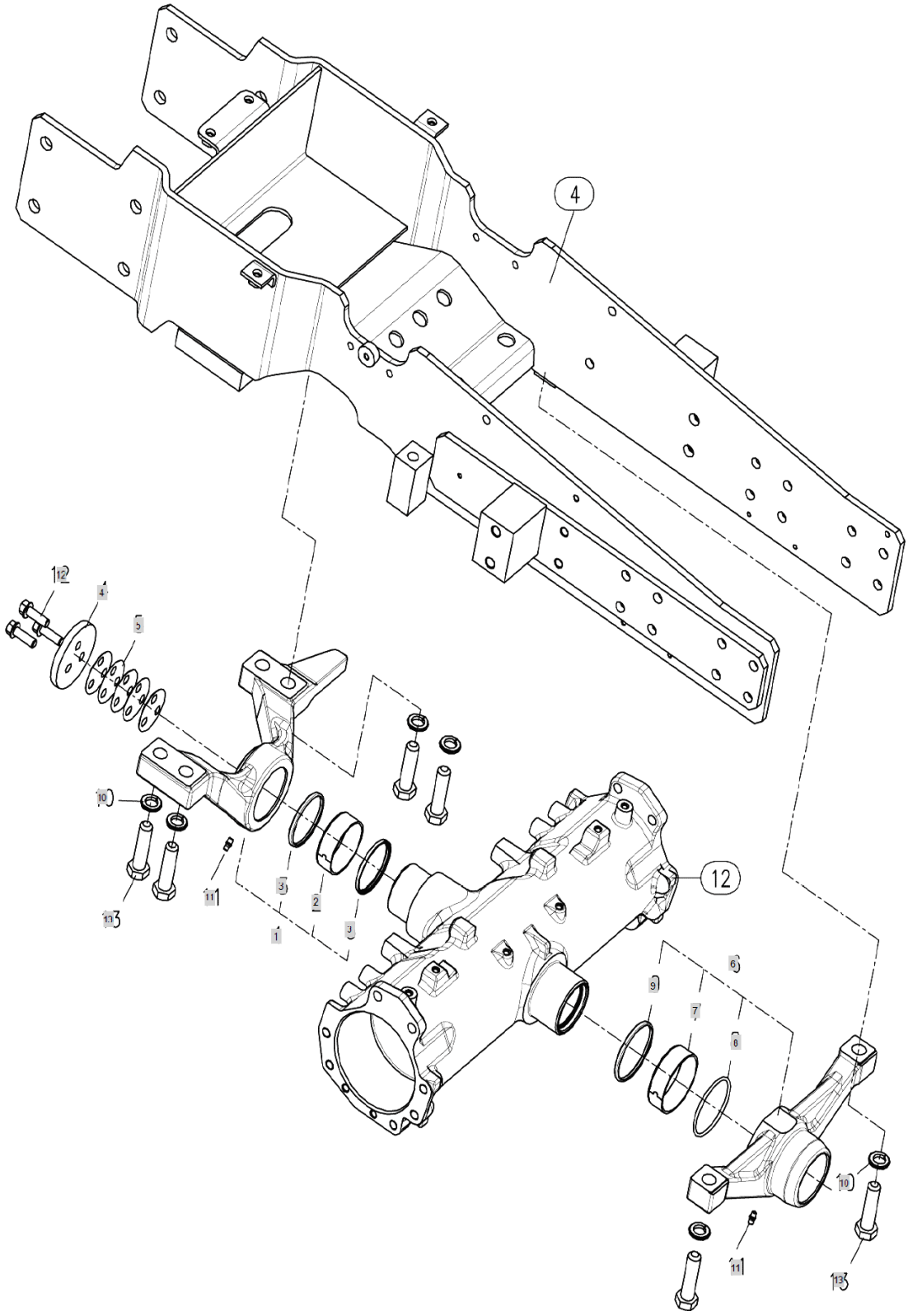

FIG S009 5220R	CENTER PIN SUPPORTER	Year/Month 2020/01

KeyNo.	Part Number	Part Name	Quantity	Other
1	TC55010000E4	Axlesupport(front)Ass'y	1	
2	TC55010200A3	BUSH	1	
3	TC55010300A4	OIL SEAL	2	
4	TC55020000A4		1	
5	TC55030000A4	SHIM	5	
6	TC55040000D4	AXLESUPPORT(REAR)	1	
7	TC55040200A3	BUSH	1	
8	TC55040300A4	O-RING	1	
9	TC55040400A4	OIL SEAL	1	
10	22217-160000	WASHER, SPRING (Φ 16)	6	
11	24761-010000	NIPPLE(A-MT6F)	2	
12	26106-100302	HEXFLANGEBOLT	3	
13	26116-160602	HEX BOLT	6	

FIG S010 5220R	TIE ROD	Year/Month 2020/01

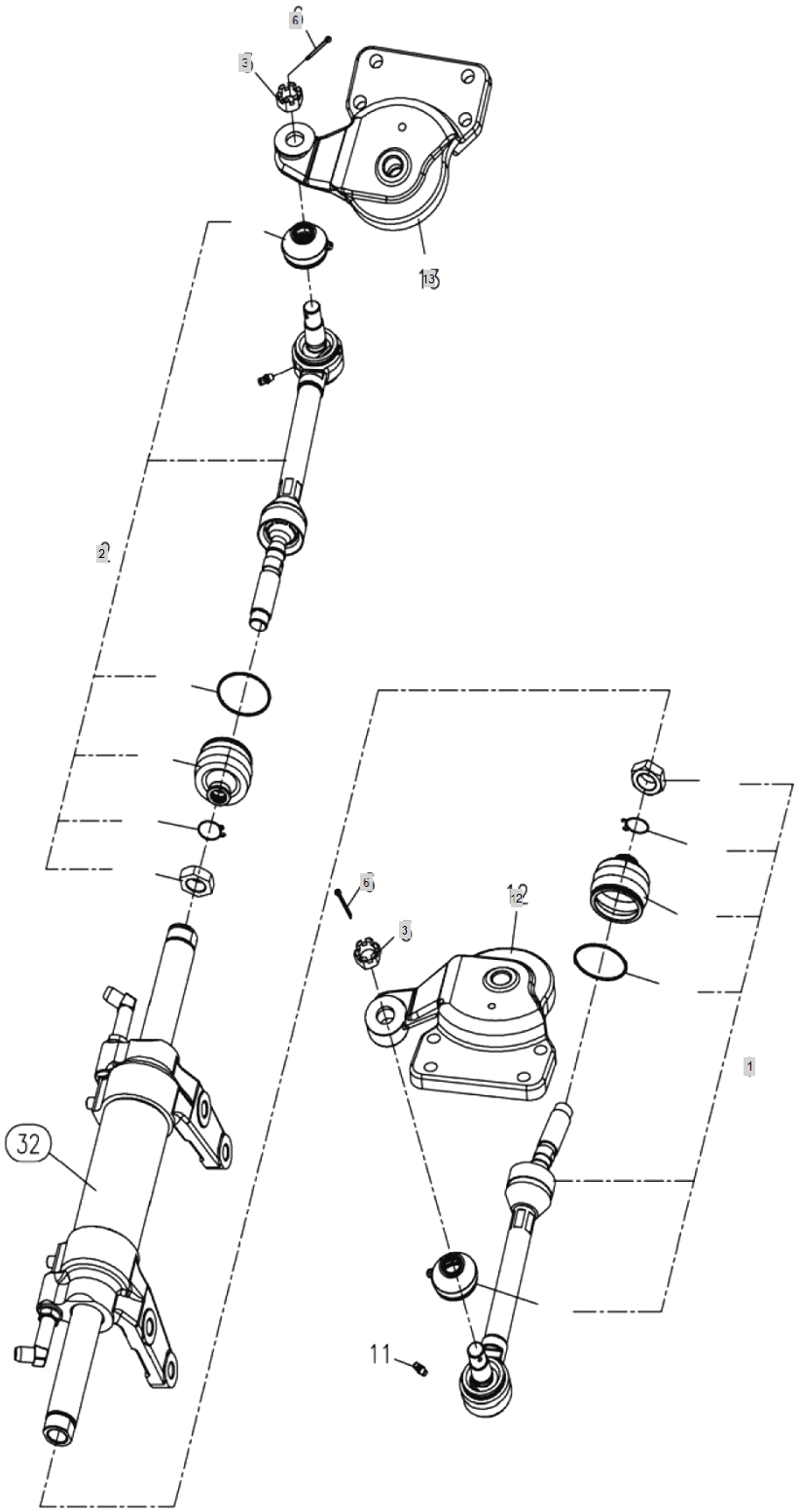

FIG S010 5220R	TIE ROD	Year/Month 2020/01

KeyNo.	Part Number	Part Name	Quantity	Other
1	TA00016315A	TIE ROD ASSY (LH)	1	
2	TA00016316A	TIE ROD ASSY (RH)	1	
3	26877-160002	STUDNUTM16	2	
5	TC56050000B4	nut	1	
6	22417-300250	PIN , COTTER (3-25)	1	
12	TC60020000B2	KNUCKLE ARM (RH) -> TA00021466A	2	
13	TC60010000B2	KNUCKLE ARM (LH) -> TA00021465A	2	

FIG S012 5220R	RING GEAR, DIFFERENTIAL GEAR	Year/Month 2020/01

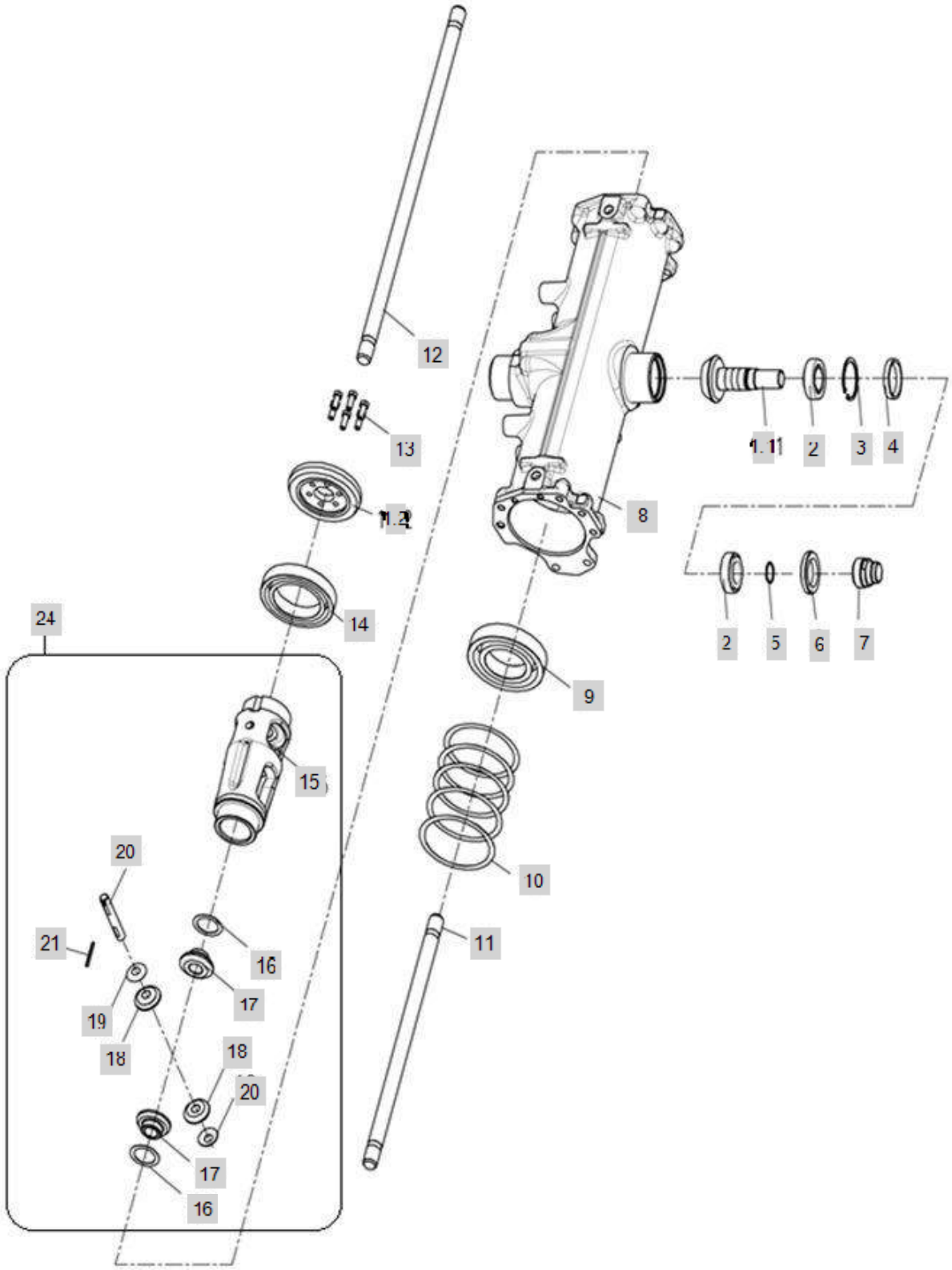

FIG S012 5220R	RING GEAR, DIFFERENTIAL GEAR	Year/Month 2020/01

KeyNo.	Part Number	Part Name	Quantity	Other
1	TA00016037A	RING GEAR ASS'Y	1	
1.1	TA00001275A	DRIVE PINION	1	
1.2	TA00001276A	RING GEAR	1	
2	24141-320060	BEARING, ROLLER (#32-00-60)	2	
3	22252-000550	RING, CIRCLIP (Φ 55)	1	
4	TC57020000A4	COLLAR	1	
5	24341-000260	O-RING, FIX (Φ26)	1	
6	24421-405808	OIL SEAL (#40-58-08)	1	
7	TC57030000A4	COLLAR,SEAL	1	
8	TA00000592A	CASE , FRONT AXLE	1	
9	24101-062134	BEARING, BALL (#6213)	1	
10	TC57070000A9	SHIM	1	
11	TA00016318A	1ST SHAFT 428	1	
12	TA00016318A	1ST SHAFT 428	1	
13	TC57080000A4	BOLT M8X22	6	
14	24101-060154	BEARING, BALL (#6015)	1	
15	TC57060000A2	CASE, DIFFERETIAL	1	
16	TC57120000A4	LINER, DIFFERENTIAL GEAR	2	
17	TC57090000A4	GEAR, DIFFERENTIAL 14	2	
18	TC57100000A4	DIFFERENCIAL PINION GEAR 10	2	
19	TC57130000A4	LINER, DIFFERENTIAL PINION	2	
20	TC57110000B4	SHAFT, PINION	1	
21	22351-040040	PIN, SPRING (4-04)	1	
24	TC57060000A9	DIFFERENTIAL ASSY, FRONT	1	

FIG S019 5220R	GEAR CASE, FRONT AXLE	Year/Month 2020/01

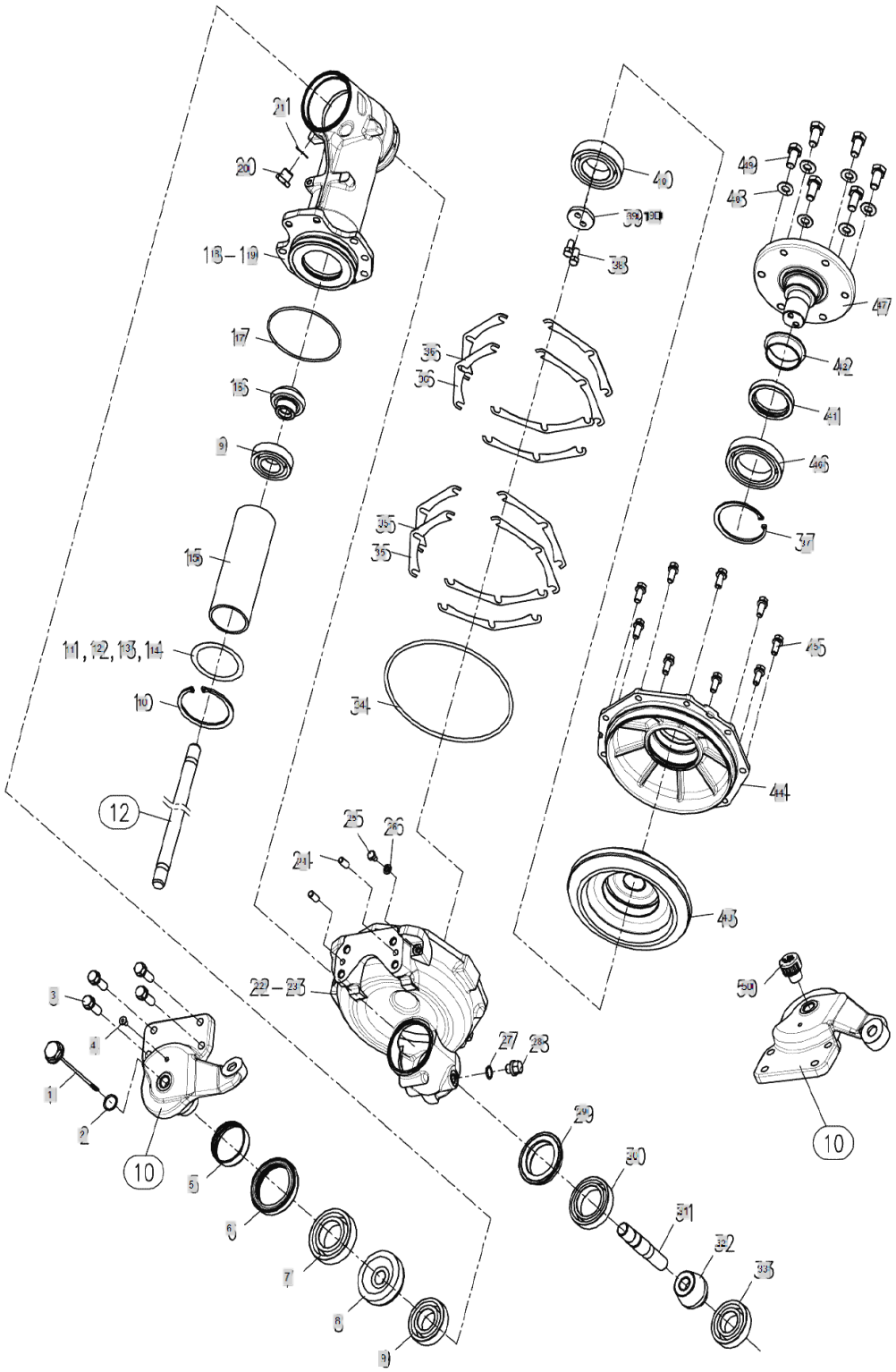

FIG S019 5220R	GEAR CASE, FRONT AXLE	Year/Month 2020/01

KeyNo.	Part Number	Part Name	Quantity	Other
1	TA00015844A	OIL GAUGE	1	
2	24311-000180	O-RING, DYNAMIC (Φ18)	1	
3	26013-012352	HEX BOLT W/WASHER	14	
4	TB26060000A4	PLUGRUBBER	1	
5	TC60130000A4	SLEEVE,SI	2	
6	TC60150000A3	OILSEAL	2	
7	24101-062094	BALL BEARING (#6209)	2	
8	TC60330000A3	GEAR, 2ND SHAFT	2	
9	24101-062074	BALL BEARING (#6207)	2	
10	22252-000720	RING, CIRCLIP (Φ 72)	2	
11	TC59050000A4	SAPCER	2	
12	TC59030000A4	SIM A	2	
13	TC59040000A4	SIM B	4	
14	TC59120000A4	SHIM C	4	
15	TC59070000A4	PIPE	2	
16	TC59020000A3	FRONT 1ST AXLE PINION	2	
17	24321-001150	O-RING(G115)	2	
18	TA60060000A	SUB TO-> TC60060000A1	1	
19	TA60070000A	SUB TO -> TC60070000A1 CASE R, FRONT GEAR	1	
20	23887-180002	PULG	1	
21	23414-180000	WASHER,SEALING	5	
22	TC60100000A1	GEAR HOUSING (LH), FRONT	1	
23	TC60140000A1	GEAR HOUSING (RH),FRONT	1	
24	22312-100200	PIN, DOWEL (10-20)	4	
25	26116-080122	SCREW,HEXAGONHEADCAP	2	
26	22190-080002	WASHER, PLAIN (Φ 08)	2	
27	24311-000160	O-RING, DYNAMIC (Φ16)	2	
28	TB28120000C4	DRAIN PLUG	2	
29	TC60110000A3	SEAL	2	
30	24101-060104	Bearing, Ball (#6010)	2	
31	TC60370000B3	FRONT SECOND SHAFT	2	
32	TC60360000B3	FRONT FINAL PINION	2	
33	TC60340000A4	BEARING(TM207C3)	2	
34	24321-002200	O-RING	2	
35	TT19070000A4	SHIMA	12	
36	TT19080000A4	SHIMB	12	
37	22252-000900	RING, CIRCLIP (Φ 90)	2	
38	26116-100202	HEX FLANGE BOLT(M10X1.5X20)	4	
39	TC61070000B4	WASHER(D47XT6)	2	
39B	TC61120000A4	BENDING WASHER	2	
40	24101-062104	BALL BEARING #6210 -> FGF4200000A4	2	
41	TC60430000A4	OIL SEAL	2	
42	TC61080000A3	SL SLEEVE	2	
43	TC61060000B2	FRONT FINAL GEAR	2	
44	TC60120000A1	BEARINGCASE,FRONT	2	

FIG S019 5220R	GEAR CASE, FRONT AXLE	Year/Month 2020/01

KeyNo.	Part Number	Part Name	Quantity	Other
45	26013-100252	SCREW,CAPTIVEWASHERCAP	18	
46	24101-060134	BALL BEARING (#6013)	2	
47	TA00015460A	FRONT SPINDLE	2	
48	TB29430000A4	WASHER	12	
49	TD23120000A4	BOLT	12	
50	TC60790000B3	CAP(M20),OIL	1	

FIG S020 5220R	SPACER	Year/Month 2020/01

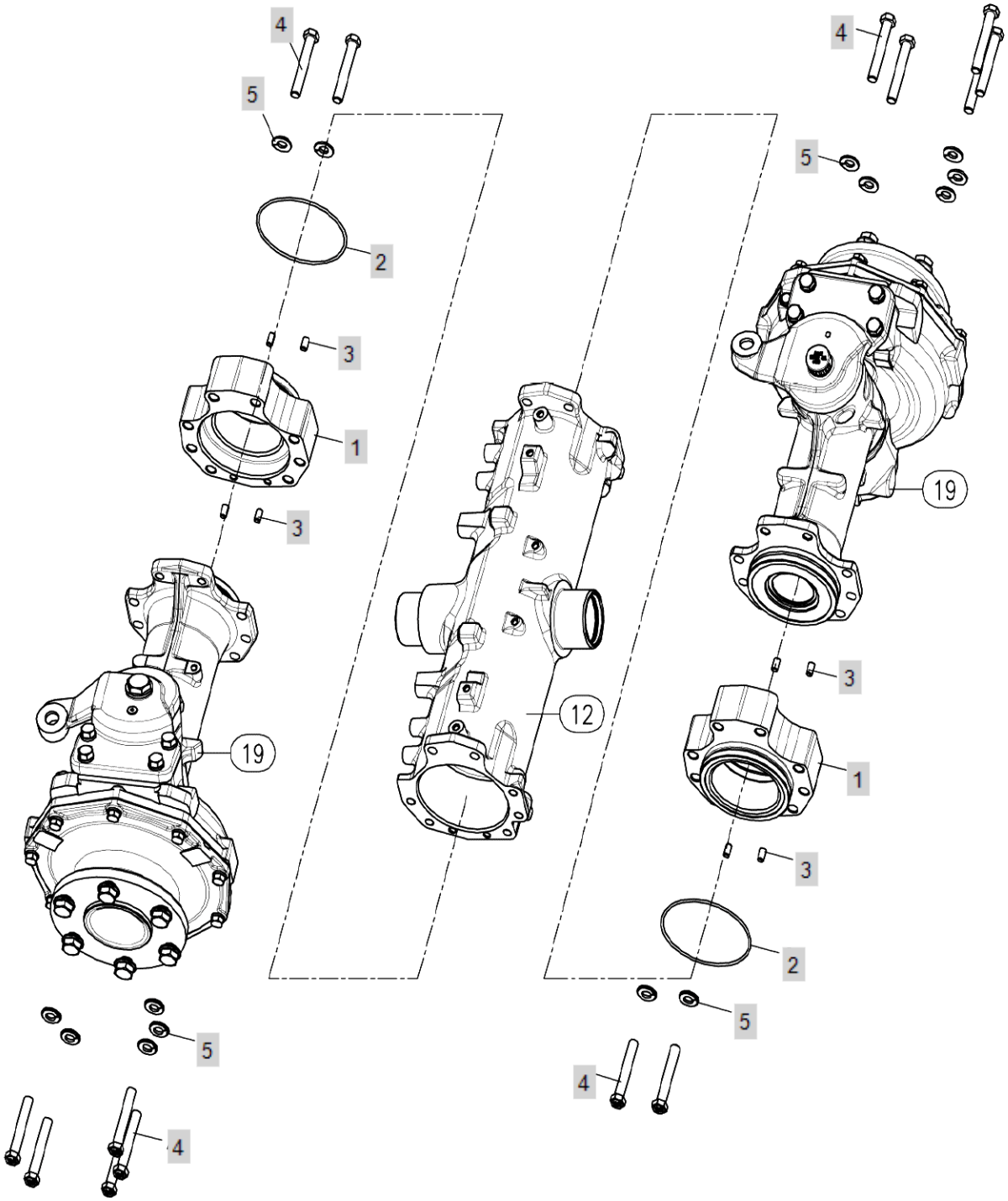

FIG S020 5220R	SPACER	Year/Month 2020/01

KeyNo.	Part Number	Part Name	Quantity	Other
1	TA00016254A	SPACER	2	
2	24321-001150	O-RING(G115)	2	
3	22312-080140	PIN, DOWEL (8-14)	4	
4	TA00016320A	BOLT 12X82	14	
5	TT08220000A4	LOCKSPRINGWASHER	14	

FIG S023 5220R	COVER SHAFT	Year/Month 2020/01

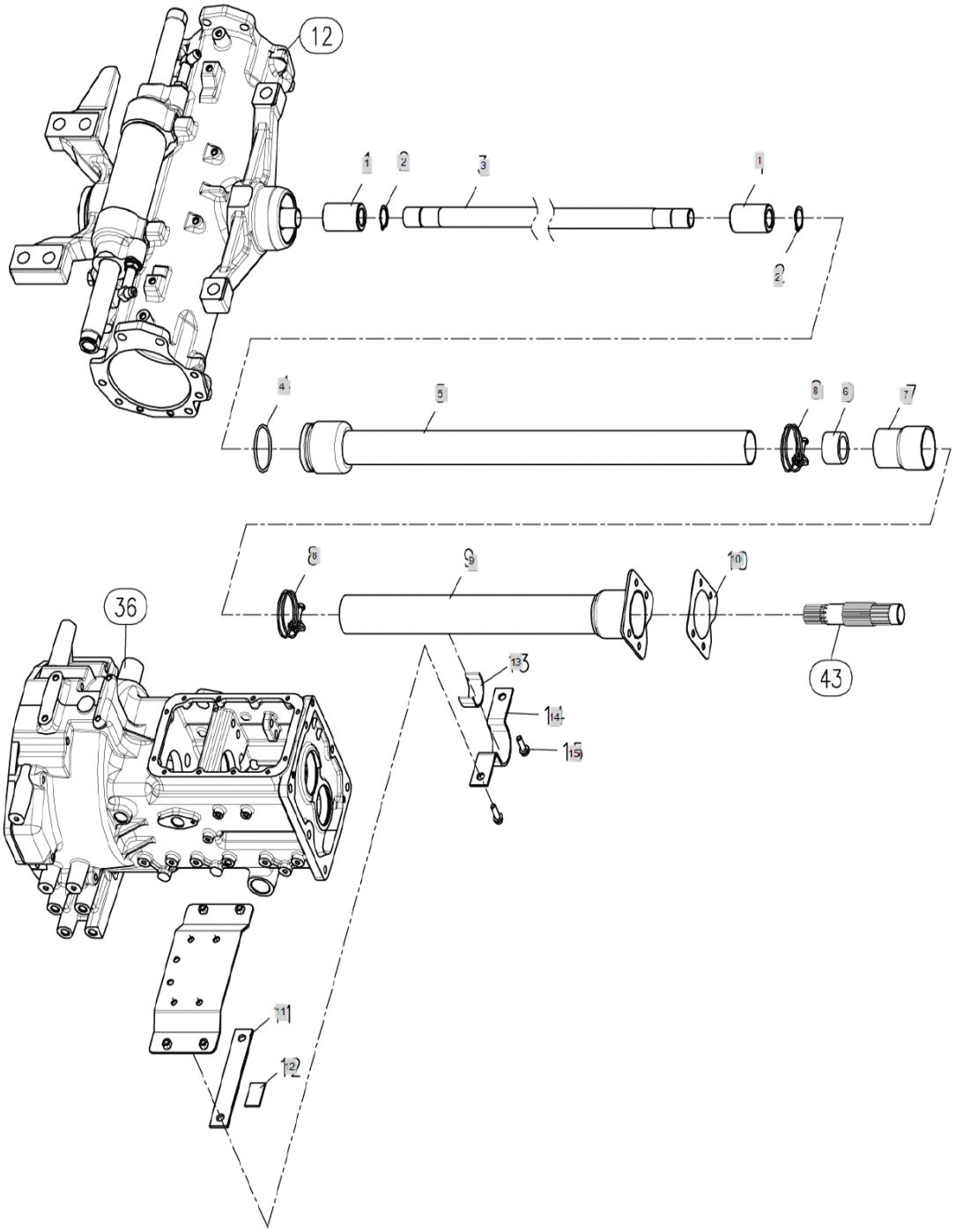

FIG S023 5220R	COVER SHAFT	Year/Month 2020/01

KeyNo.	Part Number	Part Name	Quantity	Other
1	NT15080000A4	Coupling(R) -> Nt15080000b4	1	
2	22242-000250	SNAP RING, SHAFT (Φ 25)	2	
3	TA00015872A	SHAFT	1	
4	24321-000550	SEAL,O-RING	1	
5	TA00001365A	COVER SHAFT(FRONT)	1	
6	TA00019155A	CUSHION RUBBER -> TA00019155B	1	
7	TT23040000A4	BOOTS,SHAFTCOVER	1	
8	23010-055000	HOSEBAND55	2	
9	TA00015881A	SHAFT COVER REAR	1	
10	TN23070000A4	PACKINGCOVER	1	
11	TA00021656A	CLIP(TOP)	1	
12	TA00021658A	CLIP PAD(TOP)	1	
13	TA00021659A	CLIP PAD(BOTTOM)	1	
14	TA00021657A	CLIP(BOTTOM)	1	
15	26106-120252	HEX FLANGE BOLT	2	

FIG S032 5220R	POWER STEERING CYLINDER	Year/Month 2020/01

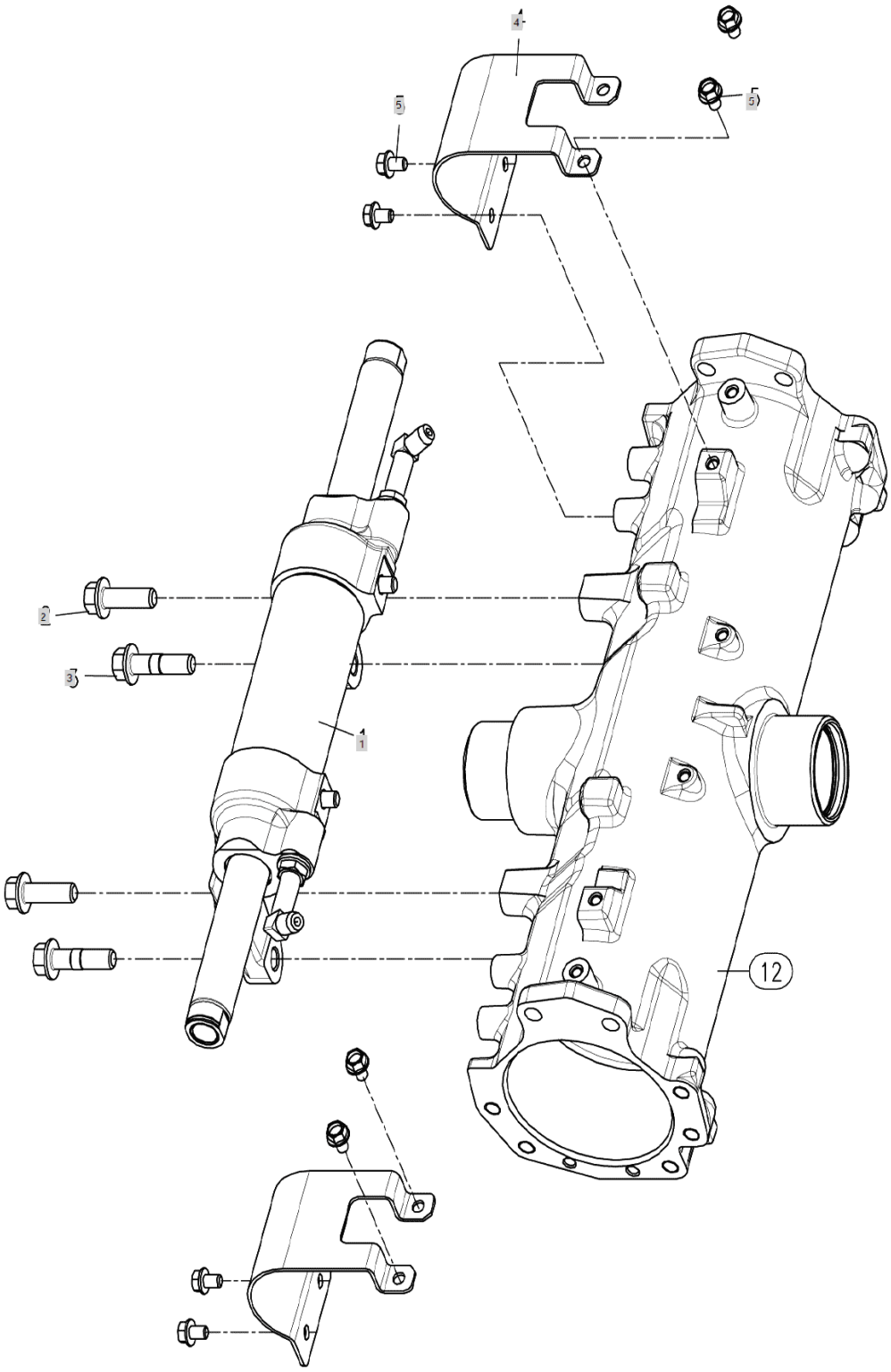

FIG S032 5220R	POWER STEERING CYLINDER	Year/Month 2020/01

KeyNo.	Part Number	Part Name	Quantity	Other
1	TC66030000C2	STEERING CYLINDER ASSY	1	
2	TC66010000A4	SCREW FLANGE	2	
3	TC66020000A4	REAMER BOLT M12x46	2	
4	TA00000834A	PST CYLINDER COVER	2	
5	26106-080122	Bolt, Hexa (8-12)	8	

FIG S034 5220R	POWER STEERING HYD LINE	Year/Month 2020/01

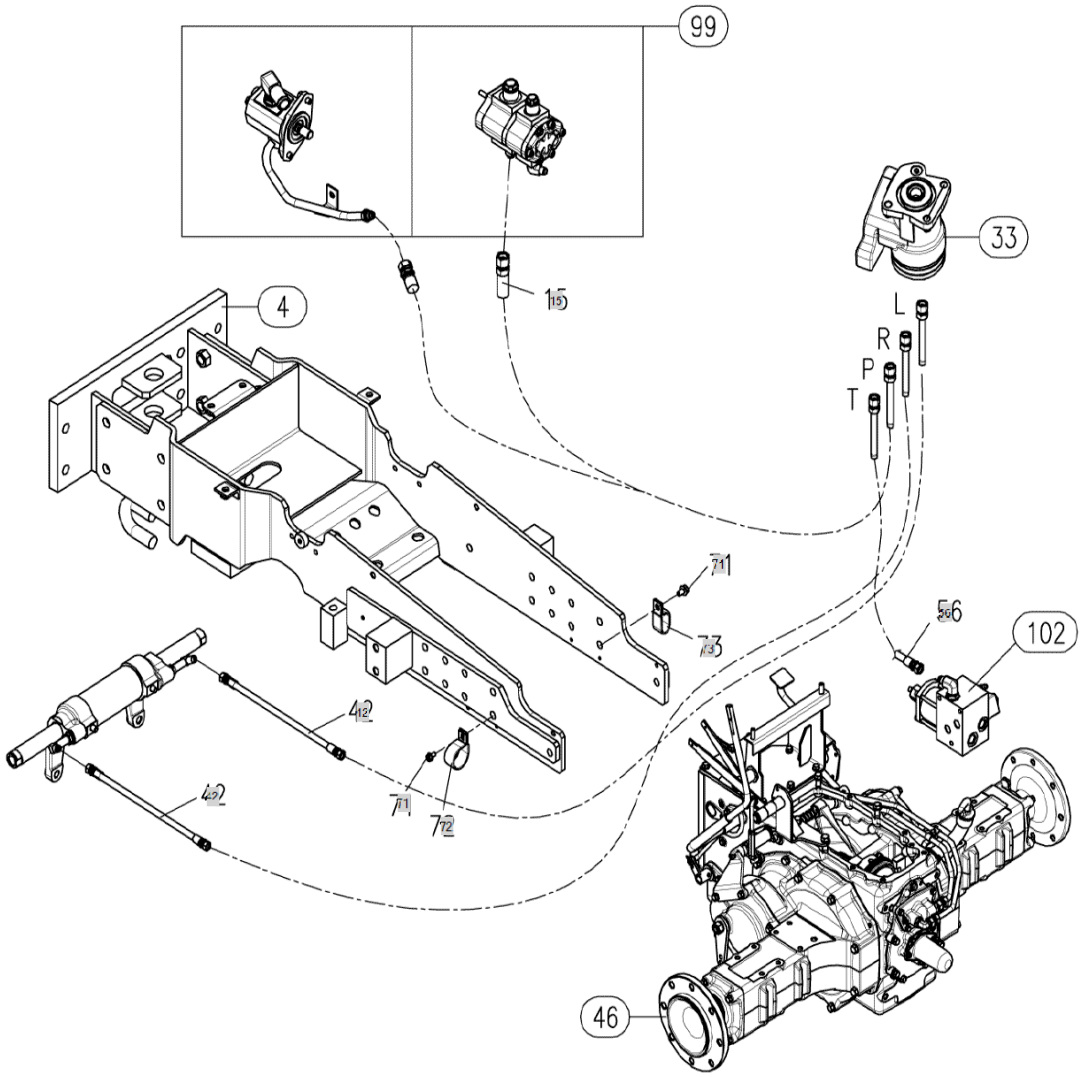

FIG S034 5220R	POWER STEERING HYD LINE	Year/Month 2020/01

KeyNo.	Part Number	Part Name	Quantity	Other
15	TA00015693A	HP HOSE (PUMP)	1	
42	TA00015708A	HOSE, PST STEERING -> TA00015708B	2	
56	TA00015709A	HOSE, PST RETURN	1	
66	TTB9420000A4	Band, Wire (250mm)	2	
70	NT34620000A4	ELBOW	1	
71	26106-060122	HEX BOLT (6-12)	2	
72	CE05310000A4	CLIP	1	
73	CA18080000A4	CLIPCDD-173219	1	

FIG S036 5220R	CLUTCH HOUSING (2)	Year/Month 2020/01

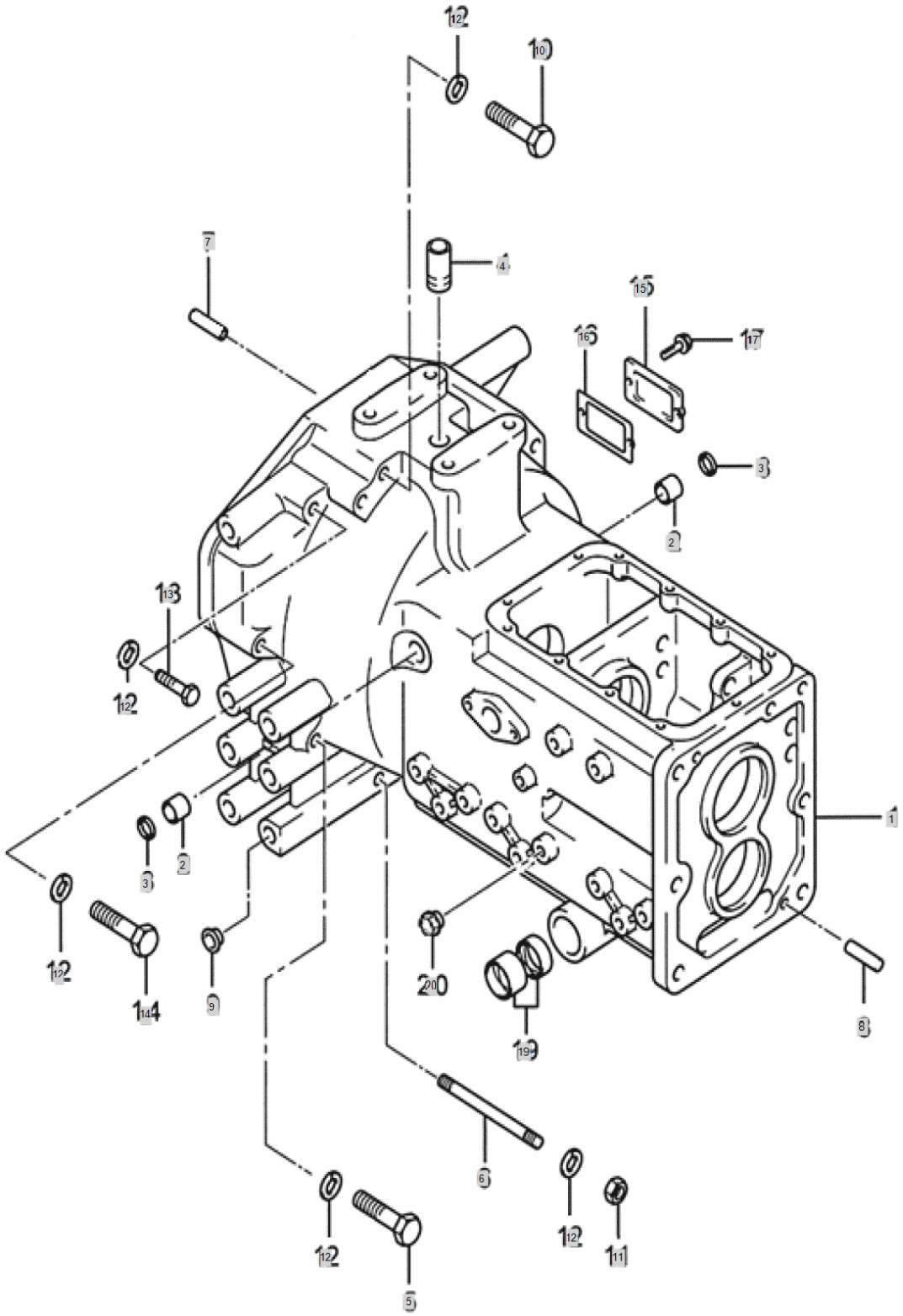

FIG S036 5220R	CLUTCH HOUSING (2)	Year/Month 2020/01

KeyNo.	Part Number	Part Name	Quantity	Other
1	NT36010000F0	CLUTCH HOUSING	1	
2	TT36020000A4	BUSH20X26X22	2	
3	TT36030000A4	SEAL20X26X4	2	
4	NT36040000A4	PIPEAIR	1	
5	TZ3605H000A3	BOLT	4	
6	TZ3606Y000A4	STUD	2	
7	22312-080180	PIN, DOWEL (8-18)	2	
8	NT41430000A4	PARALLEL PIN	2	
9	TTD4300000A4	PLUG15	8	
10	TZ3605Y000A3	BOLT	2	
11	26716-120002	BOLT,CYLINDER HEAD(B)	3	
12	22217-120000	WASHER, SPRING (Φ 12)	10	
13	FB36380000A4	Hex Bolt With Washer	1	
14	TZ3622Y000A3	BOLT.M12*110	1	
15	TZ36250000A4	COVER,CLUTCHADJUST	1	
16	TZ36260000A4	PACKING	1	
17	26013-080202	Bolt, Hexa (8-20)	2	
19	TB26240000A4	BUSH	4	
20	NT36700000A4	PLUG	1	

FIG S038 5220R	CLUTCH ASSY	Year/Month 2020/01

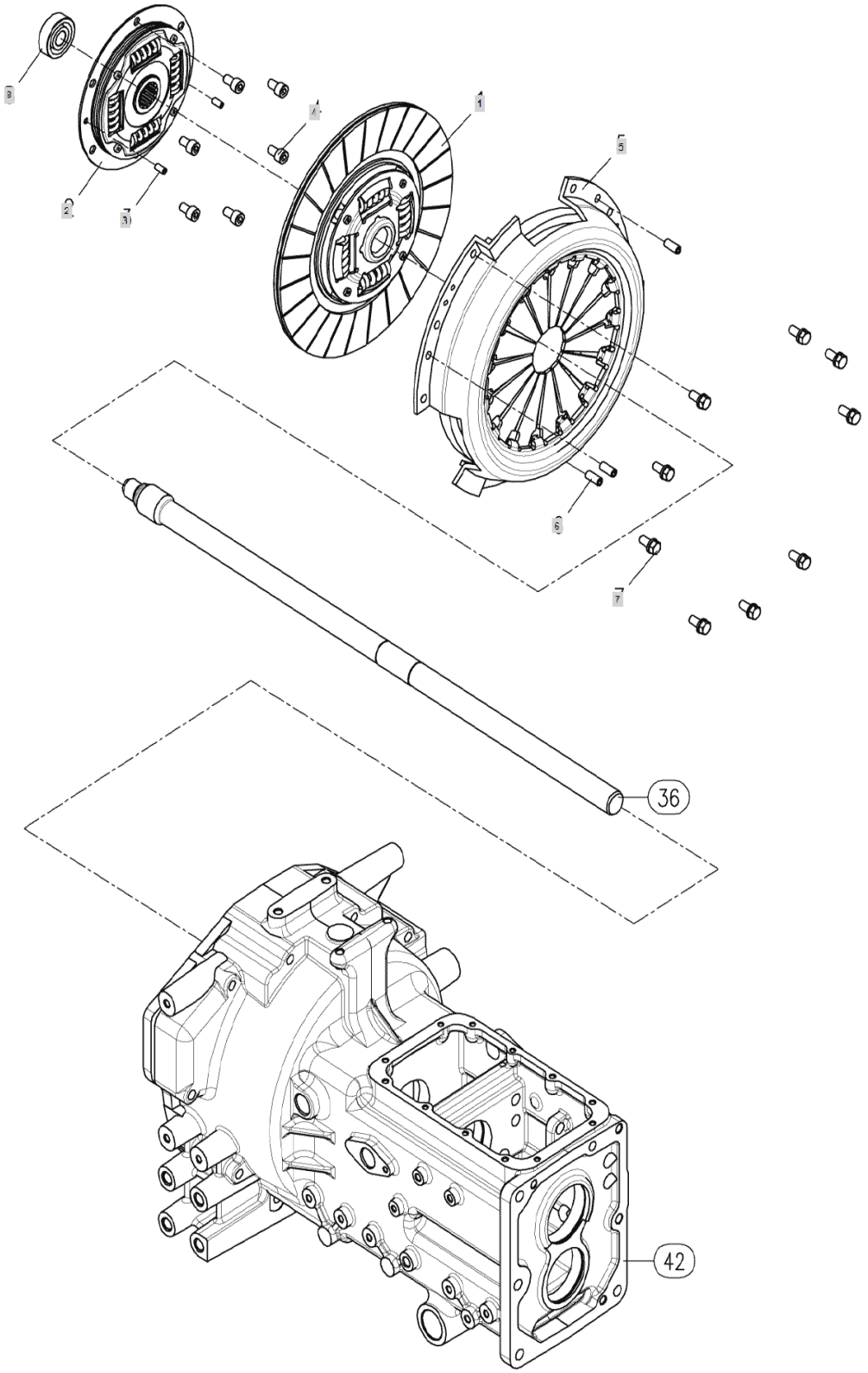

FIG S038 5220R	CLUTCH ASSY	Year/Month 2020/01

KeyNo.	Part Number	Part Name	Quantity	Other
1	NT38080000A2	CLUTCH DISC ASSY	1	
2	NT38100000A3	PTO DAMPER	1	
3	22351-060012	PIN, SPRING (6-12)	2	
4	26450-080142	BOLT	6	
5	TU38040000A1	CLUTCH COVER ASSY	1	
6	22351-080018	PIN, SPRING (8-18)	3	
7	26013-080182	SCREW,CAPTIVEWASHERCAP	9	
8	24104-063024	BALL BEARING (#6302UU)	1	

FIG S040 5220R	CLUTCH RELEASE	Year/Month 2020/01

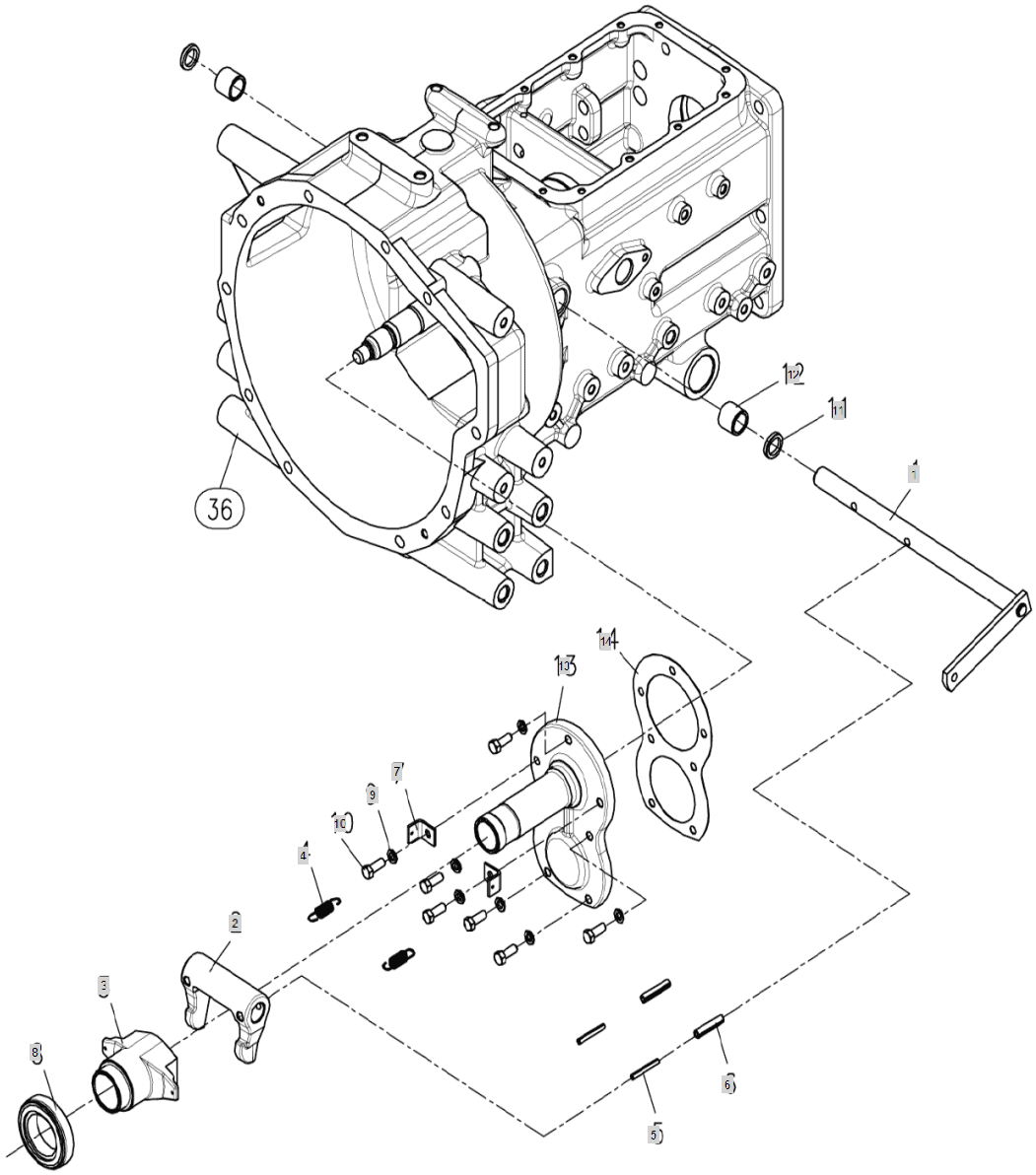

FIG S040 5220R	CLUTCH RELEASE	Year/Month 2020/01

KeyNo.	Part Number	Part Name	Quantity	Other
1	NT40010000A3	RELEASESHAFT(MAINCLUTCH)	1	
2	NT40300000A3	BEARING SLEEVE	1	
3	TZ40040000E3	YOKE,CLUTCH SHIFT	1	
4	TT40050000A4	SPRINGRETURN	2	
5	22351-050040	PIN, SPRING (5-04)	2	
6	22351-080040	PIN, SPRING (8-40)	2	
7	TN40090000A4	BRACKETSPRING	2	
8	TT40030000A4	BEARING TK45	1	
9	22217-080000	WASHER, SPRING (Φ 08)	7	
10	26116-080222	BOLT7T(8X22)	7	
11	TT36030000A4	SEAL20X26X4	2	
12	TT36020000A4	BUSH20X26X22	2	
13	NT41580000A2	oil seal case	1	
14	TZ41200000A3	PACKING	1	

FIG S041 5220R	TRANSMISSION CASE SHIFT	Year/Month 2020/01

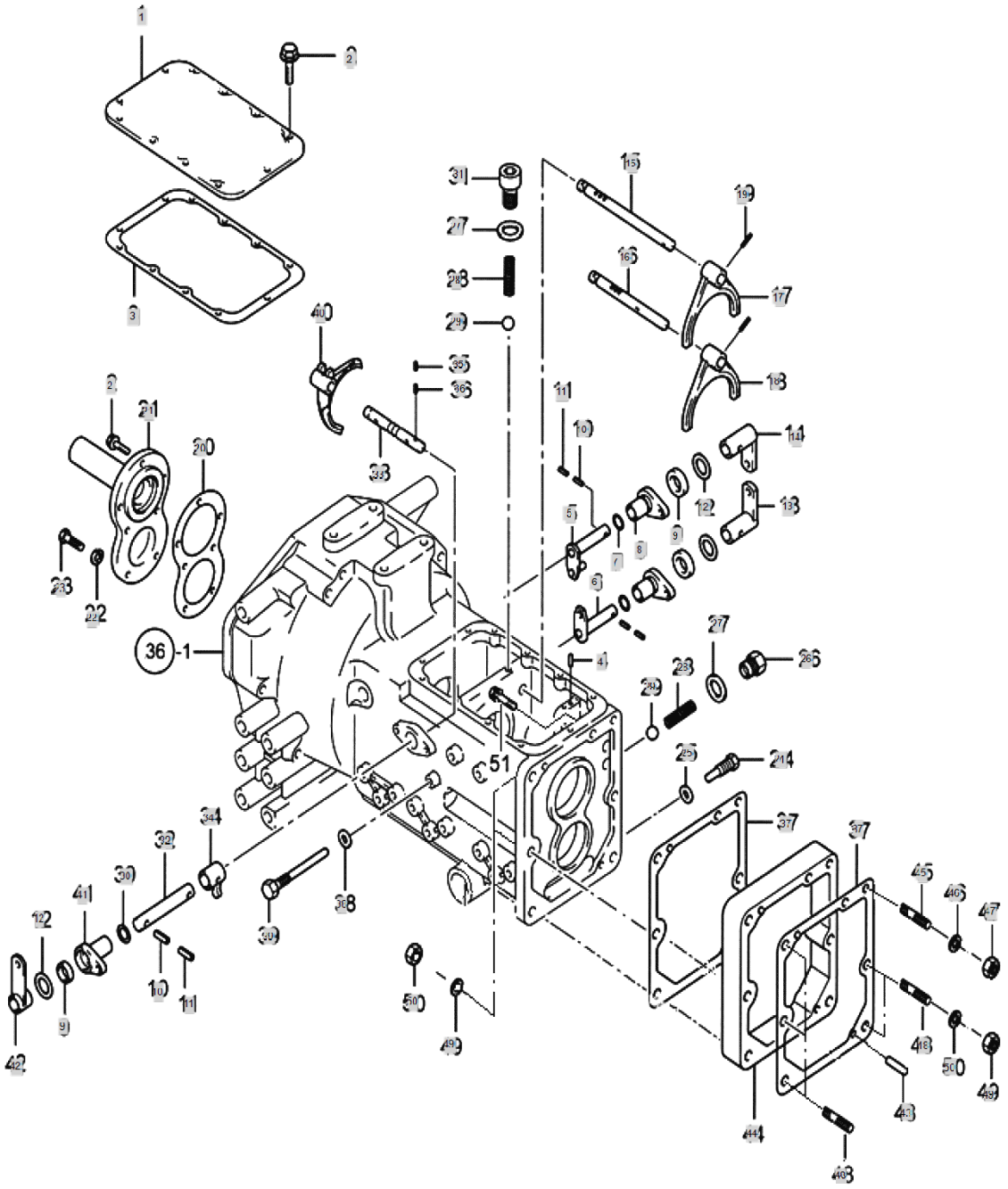

FIG S041 5220R	TRANSMISSION CASE SHIFT	Year/Month 2020/01

KeyNo.	Part Number	Part Name	Quantity	Other
1	NT41010000C3	UPPERCOVER,T/M	1	
2	26013-080252	Bolt, Hexa (8-25)	19	
3	NT41040000B3	GASKET	1	
4	TN41070000A4	PIN	1	
5	NT41080000A4	LEVER3-4	1	
6	NT41600000A4	LEVER[1ST-2ND],MAINSHIFT	1	
7	24311-000210	O-RING, DYNAMIC (Φ21)	3	
8	TN41100000A4	HOLDERMAINSHIFT	2	
9	24421-173007	Seal, Oil (#17-30-07)	3	
10	22351-080028	PIN, SPRING (8-28)	2	
11	22351-050028	PIN, SPRING (5-02)	2	
12	TT65120000A4	COLLARB	3	
13	NT41130000B4	ARM(3-4), MAIN SHIFT	1	
14	NT41140000A4	ARM(1-2),MAINSHIFT	1	
15	NT41150000A3	FORKSHAFT[3-4],MAINSHIFT	1	
16	NT41160000A3	FORKSHAFT(1-2),MAINAHIFT	1	
17	TN41170000B3	FORK1ST~2ND,MAINSHIFT	1	
18	TN41180000B3	FORK3-4MAINSHAFT	1	
19	22351-060030	PIN, SPRING (6-30)	2	
20	TZ41200000A3	PACKING	1	
21	NT41580000A2	oil seal case	1	
22	22217-080000	WASHER, SPRING (Φ 08)	5	
23	26116-080222	BOLT7T(8X22)	5	
24	TN41250000A4	FIXINGBOLT	1	
25	23414-100000	PLAIN WASHER (D10)	1	
26	NT41270000A4	CAPBOLT	1	
27	23414-160000	WASHER,SEALING	2	
28	TT42020000A4	SPRING	3	
29	24190-100001	Ball, Steel (5/16)	3	
30	24311-000110	O-RING, DYNAMIC (Φ11)	1	
31	23871-010000	PLUG	1	
32	NT41350000A4	SHAFTSHUTTLECHANGE	1	
33	TN41360000A3	SHAFTSH.FORK	1	
34	NT41380000A4	LEVERSHUTTLESHAFT	1	
35	22351-060025	PIN, SPRING (6-25)	2	
36	22351-080028	PIN, SPRING (8-28)	1	
37	TZ41440000A4	PACKING	2	
38	23414-080000	WASHER, PLAIN (Φ8)	1	
39	NT41460000A4	BOLT	1	
40	TN41490000B3	FORK, SHUTTLE SHIFT	1	
41	NT41540000A4	HOLDER,SHUTTLESHIFT	1	
42	NT41550000A4	LINKC,SHUTTLE	1	
43	NT41430000A4	PARALLEL PIN	2	
44	NT36200000B3	SPACER,MISSIONCASE	1	
45	26216-120952	BOLT	1	

FIG S041 5220R	TRANSMISSION CASE SHIFT	Year/Month 2020/01

KeyNo.	Part Number	Part Name	Quantity	Other
46	22217-120000	WASHER, SPRING (Φ 12)	1	
47	26716-120002	BOLT,CYLINDER HEAD(B)	1	
48	26216-140952	STUD BOLT	5	
49	22217-140000	WASHER, SPRING (Φ 14)	5	
50	26716-140002	NUT	5	
51	26013-121102	BOLT12X110	1	

FIG S042 5220R	MAIN REVERSER GEAR	Year/Month 2020/01

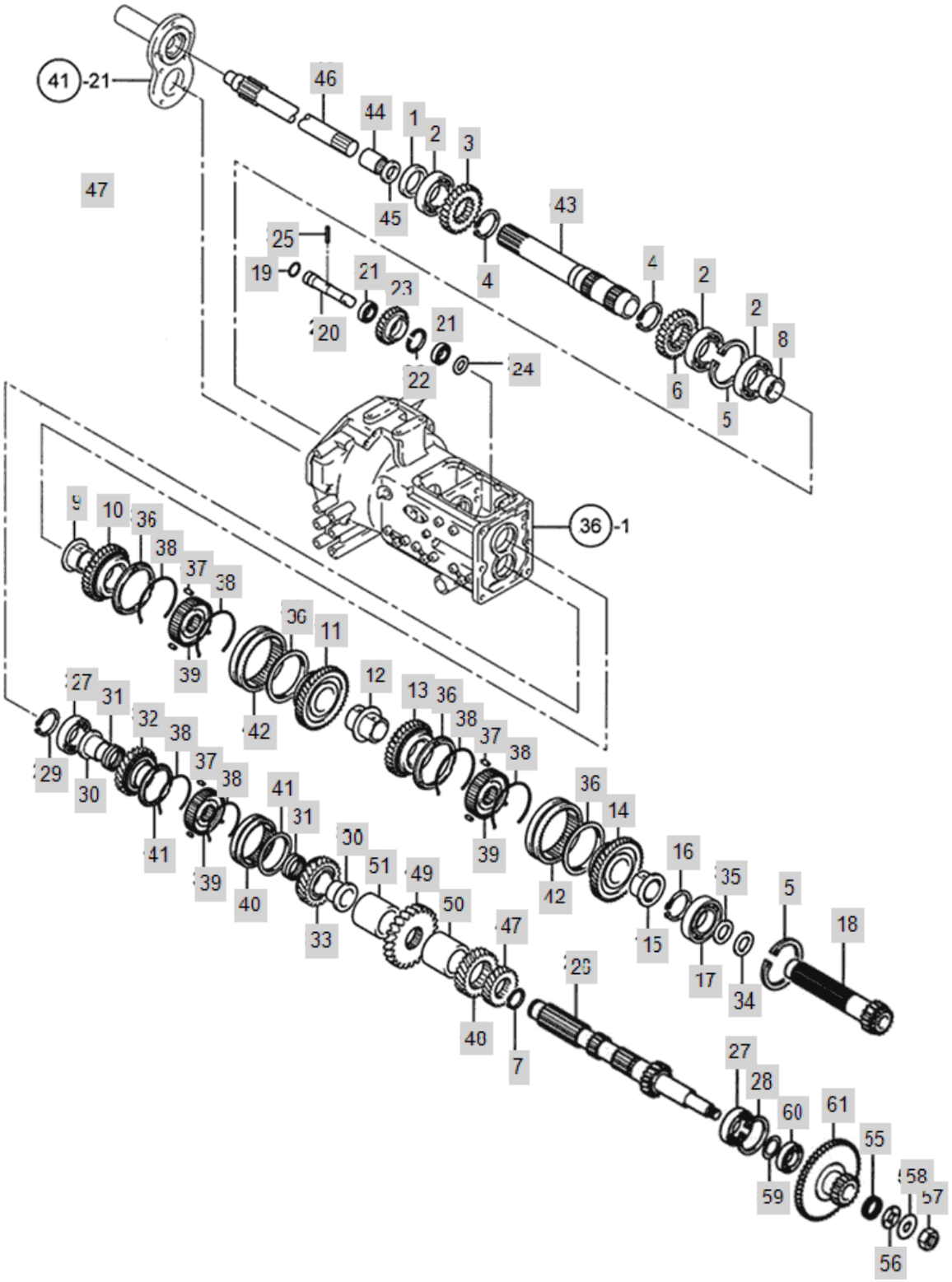

FIG S042 5220R	MAIN REVERSER GEAR	Year/Month 2020/01

KeyNo.	Part Number	Part Name	Quantity	Other
1	NT42010000A4	OILSEAL	1	
2	24101-062084	Bearing, Ball (#6208)	3	
3	TN42030000A3	GEARREVERSER26T	1	
4	22242-000450	SNAP RING, SHAFT (Φ 45)	2	
5	22252-000800	RING, CIRCLIP (Φ 80)	2	
6	TN42060000A3	GEAR,FORWARD	1	
7	22242-000350	SNAP RING, SHAFT (Φ 35)	1	
8	TN42090000B4	BUSH	1	
9	TN42100000B4	BUSHA,GUIDE	1	
10	TN42950000A3	4SHIFT_GEAR(32T)	1	
11	TN42960000A3	3RDGEAR37T	1	
12	TN42180000B4	HUSHB,GUIDE	1	
13	TN42970000A3	GEAR 41T	1	
14	TN42980000A3	GEAR 1ST.43T	1	
15	TN42210000B4	BUSHC	1	
16	22292-000350	RING, CIRCLIP (Φ 35)	1	
17	24101-063074	Bearing, Ball (#6307)	1	
18	TN42240000C2	GUIDE SHAFT,MAINSHIFT GEAR	1	
19	24311-000200	O-RING, DYNAMIC (Φ20)	1	
20	TN42260000B3	IDLE SHAFT, REVERSE	1	
21	24101-060044	Bearing, Ball (#6004)	2	
22	22252-000420	RING, CIRCLIP (Φ 42)	1	
23	TN42300000A3	REVERSERGEARIDLE	1	
24	TN42310000B4	COLLAR	1	
25	22351-060030	PIN, SPRING (6-30)	1	
26	NT42350000A2	COUNTERSHAFTA'SSY	1	
27	24101-063064	Bearing, Ball (#6306)	2	
28	22252-000720	RING, CIRCLIP (Φ 72)	1	
29	22242-000300	SNAP RING, SHAFT (Φ 30)	1	
30	TN42480000A4	BUSH D, GUIDE	2	
31	24161-404527	NEEDLEBEARING	2	
32	TN42500000E3	REVERSE GEAR 30T	1	
33	TN42510000E3	GEAR, FORWARD 32T	1	
34	TT18050000A4	SHIMA	1	
35	TT18060000A4	SHIMB	1	
36	TN42690031A2	SYNCHRO.RING(OUTER)	6	
37	TN42650000A9	PIECE	9	
38	TN42660000A9	SPRING	6	
39	TN42670000A3	HUB	3	
40	TN42680000A9	SLEEVE	1	
41	TN42690000A9	SYNCHRO.RINGASS'Y	2	
43	NT42830000A3	main shaft(outer)	1	
44	24550-020120	DRYBUSH	1	
45	24413-203007	Seal, Oil (#20-30-07)	1	
46	NT42730000A3	MAIN SHAFT, INNER	1	

FIG S042 5220R	MAIN REVERSER GEAR	Year/Month 2020/01

KeyNo.	Part Number	Part Name	Quantity	Other
47	NT42760000A3	GEAR2ND,COUNTER	1	
48	NT42770000A3	GEAR3RD,COUNTER	1	
49	NT42780000A3	GEAR4TH,COUNTER	1	
50	NT42790000A4	SPACER,FRONT	1	
51	NT42800000A4	SPACER,REAR	1	
59	22252-000190	RING, CIRCLIP (Φ 19)	1	
60	TZ43010000A3	COLLAR,COUPLING	1	
61	22252-000320	RING, CIRCLIP (Φ 32)	1	

FIG S043 5220R	FRONT DRIVE & RANGE SHIFT	Year/Month 2020/01

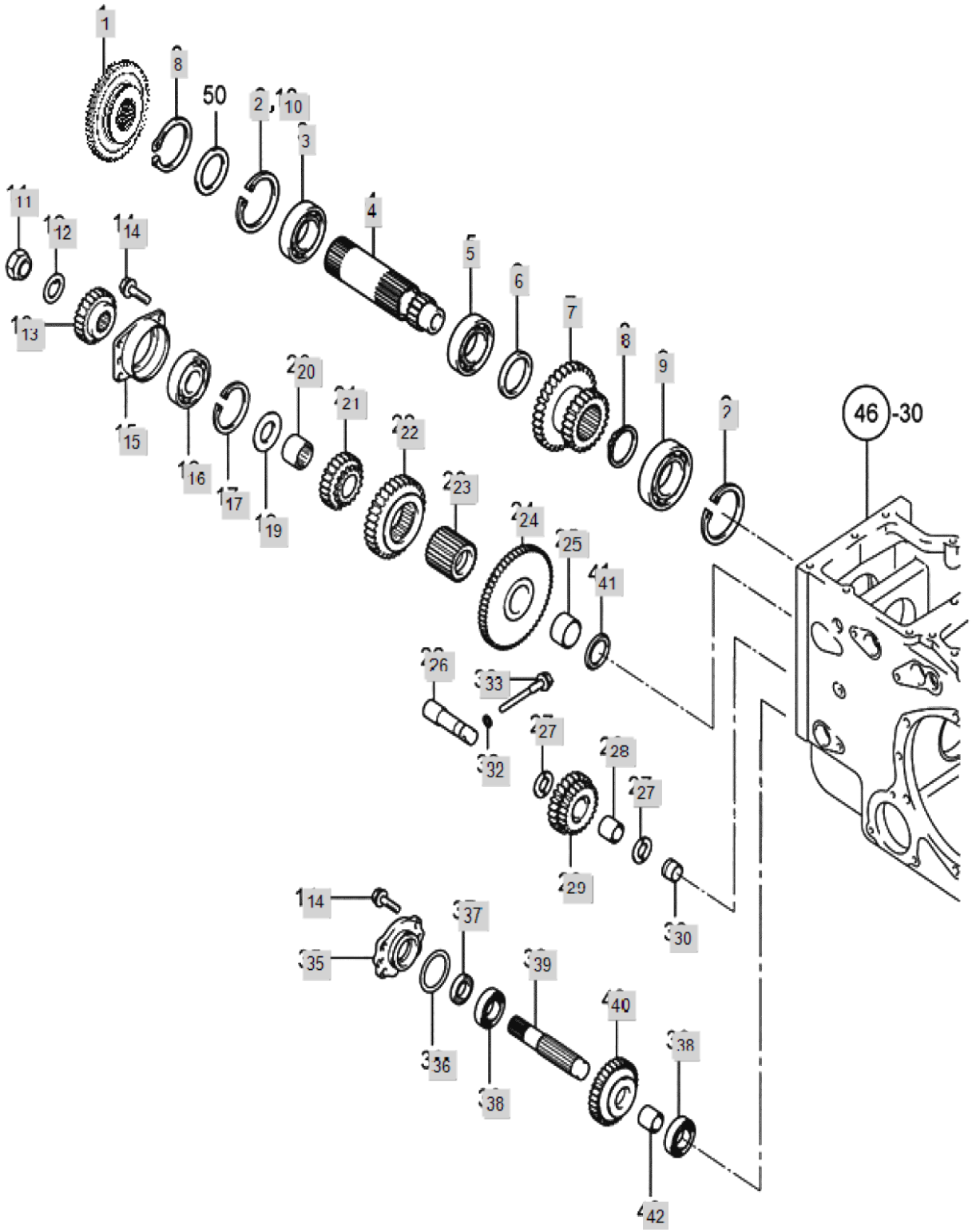

FIG S043 5220R	FRONT DRIVE & RANGE SHIFT	Year/Month 2020/01

KeyNo.	Part Number	Part Name	Quantity	Other
1	TN43010000B3	CREEPER GEAR 35T	1	
2	22252-000800	RING, CIRCLIP (Φ 80)	1	
3	24101-062094	BALL BEARING (#6209)	1	
4	TN43040000A3	GEAR16RANGESHIFT	1	
5	24101-060104	Bearing, Ball (#6010)	1	
6	TN43060000A4	COLLAR	1	
7	TN43070000A3	GEAR2ND3RDRANGESHIFT	1	
8	22242-000500	SNAP RING, SHAFT (Φ50)	1	
9	24101-063074	Bearing, Ball (#6307)	1	
10	22252-000850	RING, CIRCLIP (Φ 85)	1	
11	TN43110000A4	LOCKNUT	1	
12	TT57020000A4	WASHER	1	
13	TN43130000A3	GEAR25FRONTDRIVE	1	
14	26013-080202	Bolt, Hexa (8-20)	8	
15	TN43150000A3	CASEBEARING	1	
16	24101-063064	Bearing, Ball (#6306)	1	
17	22252-000720	RING, CIRCLIP (Φ 72)	1	
19	TN43190000A4	THRUSTWASHER	1	
20	24161-323827	Bearing, Neddle (#32-38-27)	1	
21	TA00031460A	GEAR16,RANGE SHIFT 3RD	1	
22	TN43220000B3	GEAR 30T,RANGE SHIFT 2ND	1	
23	TN43230000B3	CALLAR	1	
24	TN43240000B3	GEAR 56T,SUB SHIFT 1ST	1	
25	TT57080000A4		1	
26	TN43260000A4	SHAFT, FRONT DRIVE IDLE	1	
27	TN43270000A4	THRUSTWASHER	2	
28	24161-202825	NEEDLE BEARIN (#20-28-25)	1	
29	TN43290000A3	GEARFRONTDRUVEIDLE	1	
30	TN43300000A4	COLLAR	1	
32	23414-100000	PLAIN WASHER (D10)	1	
33	TN43330000A4	BOLT	1	
35	TN43350000A3	CASEOILSEAL	1	
36	TN43360000A4	O-RING	2	
37	24421-254008	Seal, Oil (#25-40-08)	1	
38	24101-062054	Bearing, Ball (#6205)	1	
39	TN43390000A3	SHAFTFRONTDRIVELINE	1	
40	TN43400000A3	GEARFRONTDRIVE	1	
41	TT57100000B4	WASHER,THRUST	1	
42	TN43450000A4	COLLAR	1	

FIG S044 5220R	FRONT DRIVE & RANGE SHIFT LEVER	Year/Month 2020/01

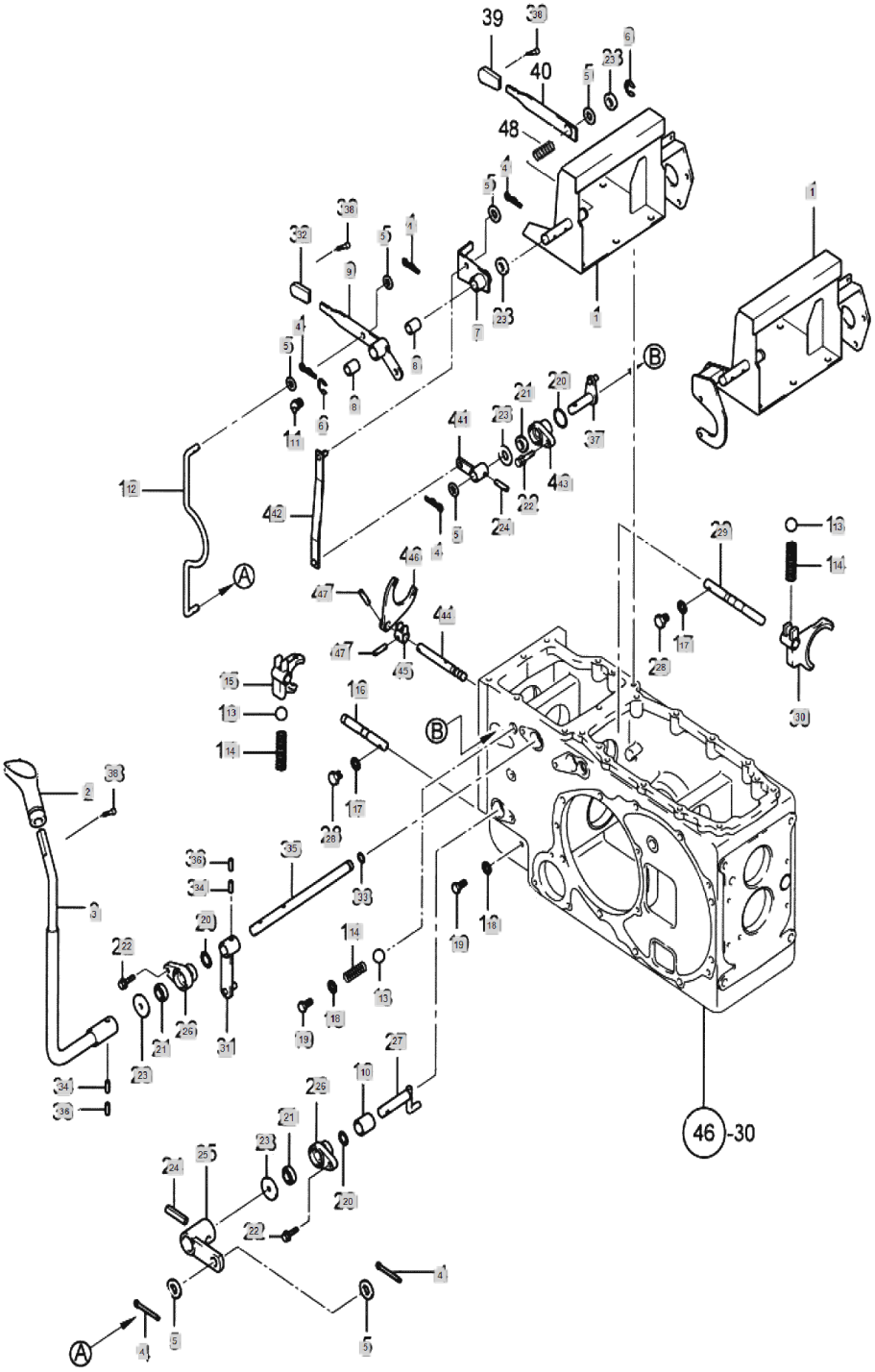

FIG S044 5220R	FRONT DRIVE & RANGE SHIFT LEVER	Year/Month 2020/01

KeyNo.	Part Number	Part Name	Quantity	Other
1	TA00002757A	STAY ASS'Y,SEATRAIL	1	
2	TA00058723A	KNOB	1	
2-1	TA00016324B	KNOB, RANGE SHIFT	1	deleted/삭제
3	TA00001060C	LEVER, SUB SHIFT	1	
4	22417-250250	PIN , COTTER (2-25)	6	
5	22137-100000	WASHER, PLAIN (Φ 10)	6	
6	22272-000150	RING, CIRCLIP (Φ 15)	2	
7	TN44080000B3		1	
8	TT70080000A4	BUSH	2	
9	NT44100000B3	Lever, Front Drive	1	
10	TT70090000A4	BUSH	1	
11	TN44590000A4	GREASENIPPLE	1	
12	NT44140000A4	ROD,FRONTDRIVE	1	
13	24190-100001	Ball, Steel (5/16)	3	
14	TT42020000A4	SPRING	3	
15	TN44220000A3	FORKFRONTDRIVE	1	
16	TN44230000A3	SHAFTFRONTDRIVEFORK	1	
17	23414-080000	WASHER, PLAIN (Φ8)	2	
18	23414-100000	PLAIN WASHER (D10)	2	
19	TN44280000A4	PLUG	2	
20	24321-000250	O-RING	3	
21	24421-173007	Seal, Oil (#17-30-07)	3	
22	26013-080252	Bolt, Hexa (8-25)	3	
23	TT65120000A4	COLLARB	5	
24	22351-080028	PIN, SPRING (8-28)	2	
25	NT44360000A4	LEVER,A'SSYB.FRONTDRIVE	1	
26	TN44370000A4	HOLDERSHIFTARM	2	
27	TN44380000A4	LEVERASS'YF.DRIVE	1	
28	TN44400000A4	BOLT	2	
29	TN44410000B3	SHAFT,RANGESHIFTFORK	1	
30	TN44420000A3	FORKRANGESHIFT	1	
31	TN44440000D4	LEVERASS`Y(B),RANGESHAFT	1	
32	TA00056015A	LEVER, FRONT DRIVE	1	
32-1	TA00015827A	KNOB, FRONT DRIVE LEVER	1	deleted/삭제
33	TN46180000A4	O-RING	1	
34	22351-080030	PIN, SPRING (8-30)	2	
35	TN44520000B3	SHAFT,RANGESHIFTLEVER	1	
36	22351-050030	PIN, SPRING (5-03)	2	
37	TN44260000B4	LEVER ASS'Y CREEPER	1	
38	26023-040162	SCREW	3	
41	NT44350000B4		1	
42	NT44070000B3		1	
43	TN44300000A4	Holder, Shift Arm	1	
44	TN44180000A3	FORK SHAFT,CREEPER LEVER	1	
45	TN44170000A4	FORK	1	

FIG S044 5220R	FRONT DRIVE & RANGE SHIFT LEVER	Year/Month 2020/01

KeyNo.	Part Number	Part Name	Quantity	Other
46	TN44160000A3	FORK,CREEPER	1	
47	22351-060025	PIN, SPRING (6-25)	1	

FIG S045 5220R	PTO SPEED SHIFT	Year/Month 2020/01

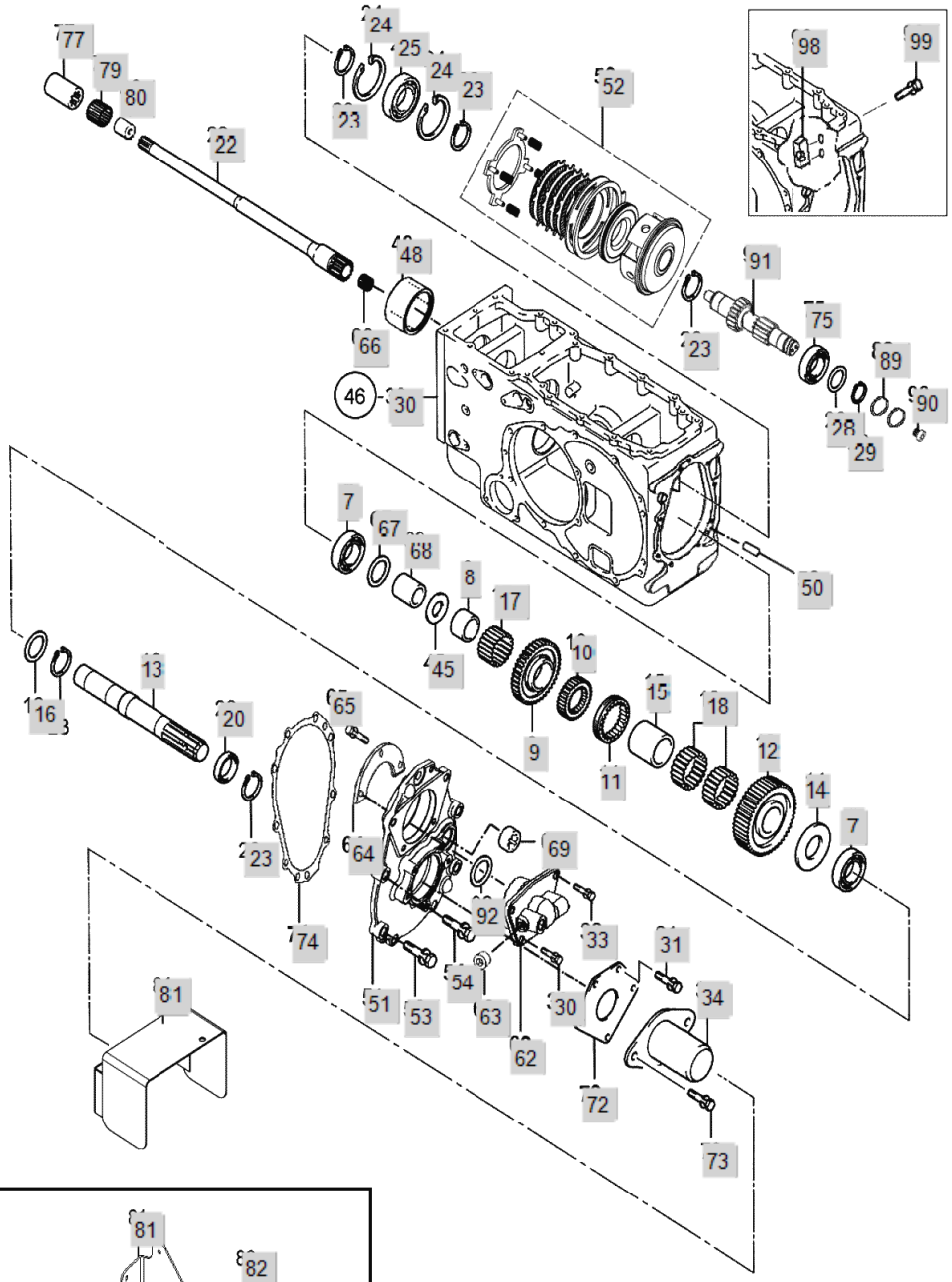

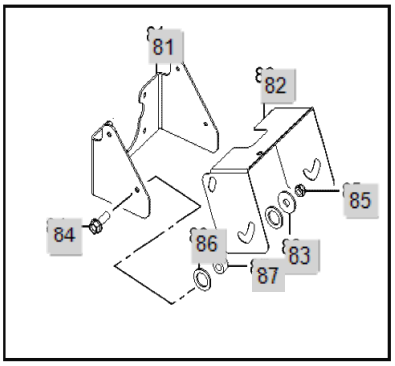

FIG S045 5220R	PTO SPEED SHIFT	Year/Month 2020/01

KeyNo.	Part Number	Part Name	Quantity	Other
7	24101-063074	Bearing, Ball (#6307)	2	
8	NT45430000A4	NEEDLEBUSH.D	1	
9	NT45930000A3	PTO GEAR 46T	1	
10	TZ45100000A3	HUB,P.T.O	1	
11	TZ45110000B4	SLEEVE,P.T.O	1	
12	TZ45120000A3	GEARLST,P.T.O	1	
13	NT45130000B3	shaft, PTO	1	
14	TZ45140000A4	COLLAR	1	
15	TZ45150000A4	BUSHB,NEEDLE	1	
16	TN45120000A4	WASHER	1	
17	24161-455328	NEEDLE BEARING (#45-53-28)	1	
18	24161-455320	NEEDLEBEARING	0	
20	TT62040000A3	PTO OIL SEAL QLF35X60X19	1	
22	TZ45220000C	SHAFT,P.T.O DRIVE	1	
23	22242-000350	SNAP RING, SHAFT (Φ 35)	0	
24	22252-000720	RING, CIRCLIP (Φ 72)	0	
25	24101-062074	BALL BEARING (#6207)	1	
28	TN45520000A4	COLLAR	1	
29	22242-000300	SNAP RING, SHAFT (Φ 30)	1	
30	26013-080202	Bolt, Hexa (8-20)	2	
31	26013-060162	Bolt, Hexa (6-16)	3	
33	26013-080302	HEX BOLT W/WASHER	2	
34	TT80030000A3	P.T.OCOVER	1	
45	NT45440000A4	COLLAR	1	
48	NT45480000A3	PTO COUPLING	1	
50	22312-100200	PIN, DOWEL (10-20)	2	
51	NT45510000A1	HOUSING, PTO SHAFT	1	
52	NT45520000B3	PTO CLUTCH PACK	1	
53	26013-100252	SCREW,CAPTIVEWASHERCAP	3	
54	26013-100352	Bolt, Hexa (10-35)	4	
62	NT45620000A3	Seal Case	1	
63	23871-010000	PLUG	1	
64	NT45640000A4	Bearing Cover	1	
65	26013-060162	Bolt, Hexa (6-16)	3	
66	24161-182417	Bearing, Neddle (#18-24-17)	1	
67	NT45670000A4	Thrust Washer	1	
68	NT45680000A4	Spacer	1	
69	NT45690000A4	SIGHT GLASS	1	
72	NT45720000A4	Plate	1	
73	26106-060162	HEXFLANGEBOLT	2	
74	NT45740000A3	PACKING, PTO SHAFT HOUSING	1	
75	24101-063064	Bearing, Ball (#6306)	1	
77	TN45200000A4	JOINT	1	
79	24161-253020	Bearing, Neddle (#25-30-20)	1	
80	TN45180000A4	BUSH,BEARING	1	

FIG S045 5220R	PTO SPEED SHIFT	Year/Month 2020/01

KeyNo.	Part Number	Part Name	Quantity	Other
81	TA00000738B	BRACKET, PTO SHAFT COVER	1	
82	TA00000739A	COVER, PTO SHAFT	1	
83	22157-080000	WASHER, PLAIN (Φ 08)	4	
84	26106-080252	SCREW,HEXFLANGEHEADCAP	4	
85	26347-080002	Unut	4	
86	FB80520000A4	RUBBER	8	
87	FB80550000A4	BUSH	4	
81A	TZ45440000D3	PTO SAFETY COVER	1	
89	TT64070000A4	SEAL RING	2	
90	TT64080000A4	RETAININGSCREWM7X1	1	
91	NT45920000A2	SHAFT, PTO SHIFT	1	
92	24341-000700	O-RING, FIX (Φ70)	1	
98	NT45980000A4	BRAKE HOLDER	1	
99	26013-080252	Bolt, Hexa (8-25)	2	

FIG S046 5220R	REAR AXLE CASE, PTO SHIFT	Year/Month 2020/01

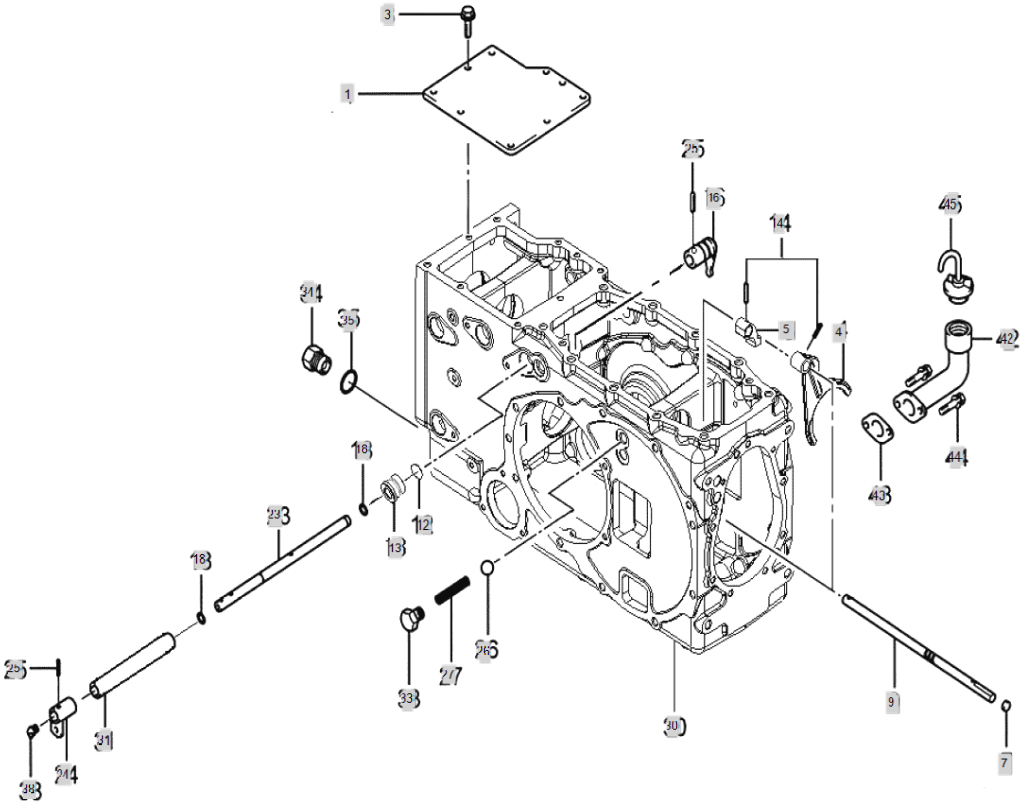

FIG S046 5220R	REAR AXLE CASE, PTO SHIFT	Year/Month 2020/01

KeyNo.	Part Number	Part Name	Quantity	Other
1	TN46010000B3	COVER,REALAXLECASE	1	
3	26013-100322	BOLT	9	
4	NT46100000B3	SHAFT,P.T.OFORK3-	1	
5	TN46110000A4	SHIFTER	1	
7	27260-150000	Cap, Seal (d=15mm)		
9	NT46750000A3	FORK SHAFT, PTO SHIFT	1	
12	24311-000240	O-RING, DYNAMIC (Φ24)	1	
13	TA00019206A	HOLDER	1	
14	22351-060025	PIN, SPRING (6-25)		
16	TN46160000A4	ARM, SHIFTER	1	
18	TN46180000A4	O-RING		
23	TA00019204A	SHAFT PTO SHIFT LEVER	1	
24	TN46240000C4	LEVER,P.T.OSHAFT	1	
25	22351-080030	PIN, SPRING (8-30)		
26	24190-100001	Ball, Steel (5/16)	1	
27	TT42020000A4	SPRING	1	
30	NT46610000G0	REAR AXLE CASE	1	
31	TA00019205A	COLLAR	1	
33	TN46330000A4	BOLT	1	
34	TB28120000C4	DRAIN PLUG	1	
35	24311-000160	O-RING, DYNAMIC (Φ16)	1	
38	TN46380000A4	GREASENIPPLE	1	
42	NT46420000B3	OILINTAKEASS'Y	1	
43	NT46430000A4	PACKING,OILINTAKE	1	
44	26013-080202	Bolt, Hexa (8-20)	2	
45	FT80370000A4	CAP,INTAKE	1	

FIG S047 5220R	LEVER ASS'Y, PTO SPEED CHANGE	Year/Month 2020/01

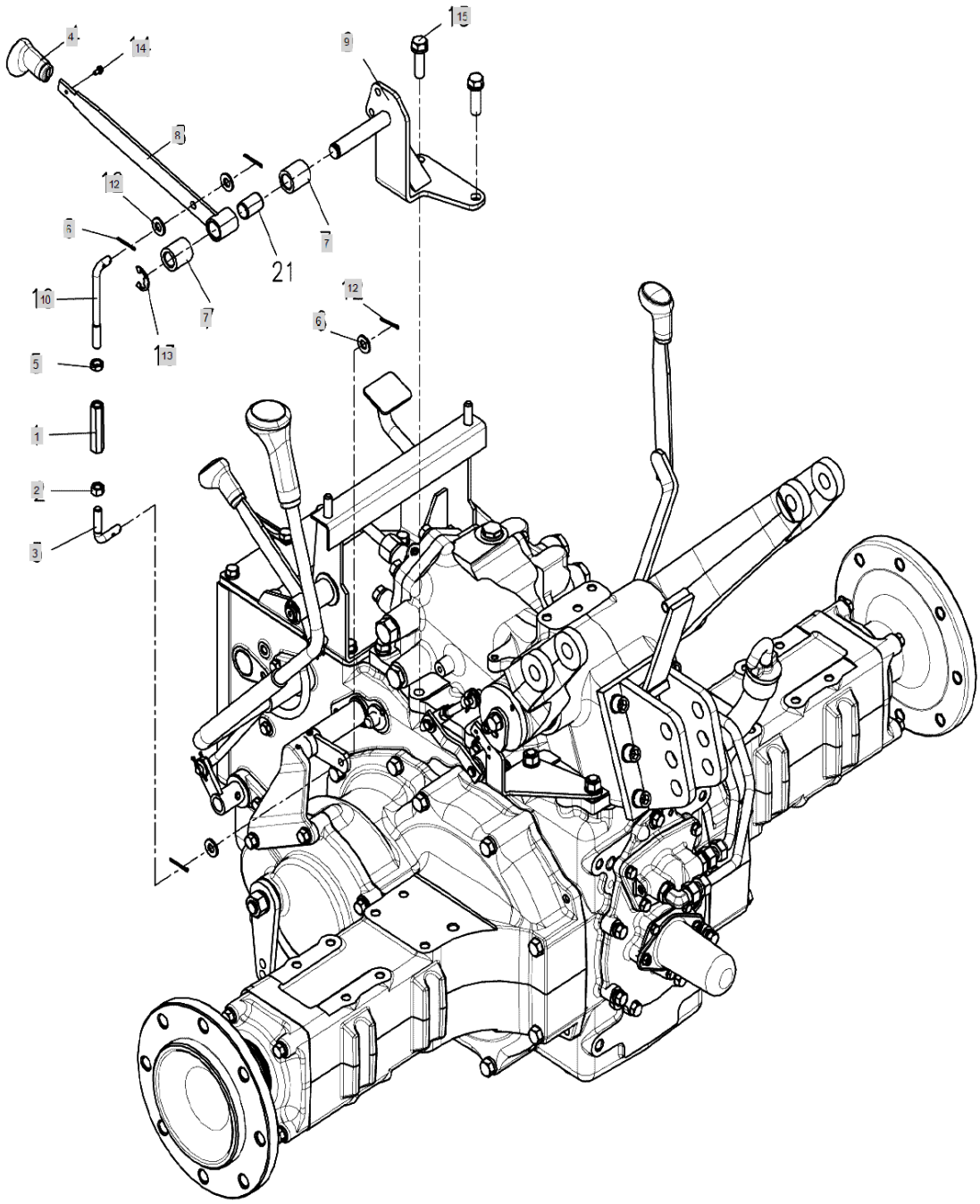

FIG S047 5220R	LEVER ASS'Y, PTO SPEED CHANGE	Year/Month 2020/01

KeyNo.	Part Number	Part Name	Quantity	Other
1	TT71010000A4	ADJUST	1	
2	TT71020000A4	NUT (LH)	1	
3	TA00003044A	PTO CHANGE ROD B	1	
4	TA00056007A	LEVER, PTO	1	
4-1	TA00015833A	KNOB, PTO SHIFT	1	deleted/삭제
5	26756-100002	FIXEDNUT	1	
6	22417-250250	PIN , COTTER (2-25)	4	
7	TZ47140000A4	COLLAR	2	
8	TA00001122B	LEVER, PTO	1	
9	NT47180000A2	SHAFT,P.T.OSHIFTLEVER	1	
10	TZ47170000A3	LEVER,PTOCHANGE	1	
11	TT70080000A4	BUSH	1	
12	22137-100000	WASHER, PLAIN (Φ 10)	4	
13	22272-000150	RING, CIRCLIP (Φ 15)	1	
14	26023-040162	SCREW	1	
15	26013-120352	SCREW,CAPTIVEWASHERCAP	2	

FIG S048 5220R	HOUSING, REAR AXLE	Year/Month 2020/01

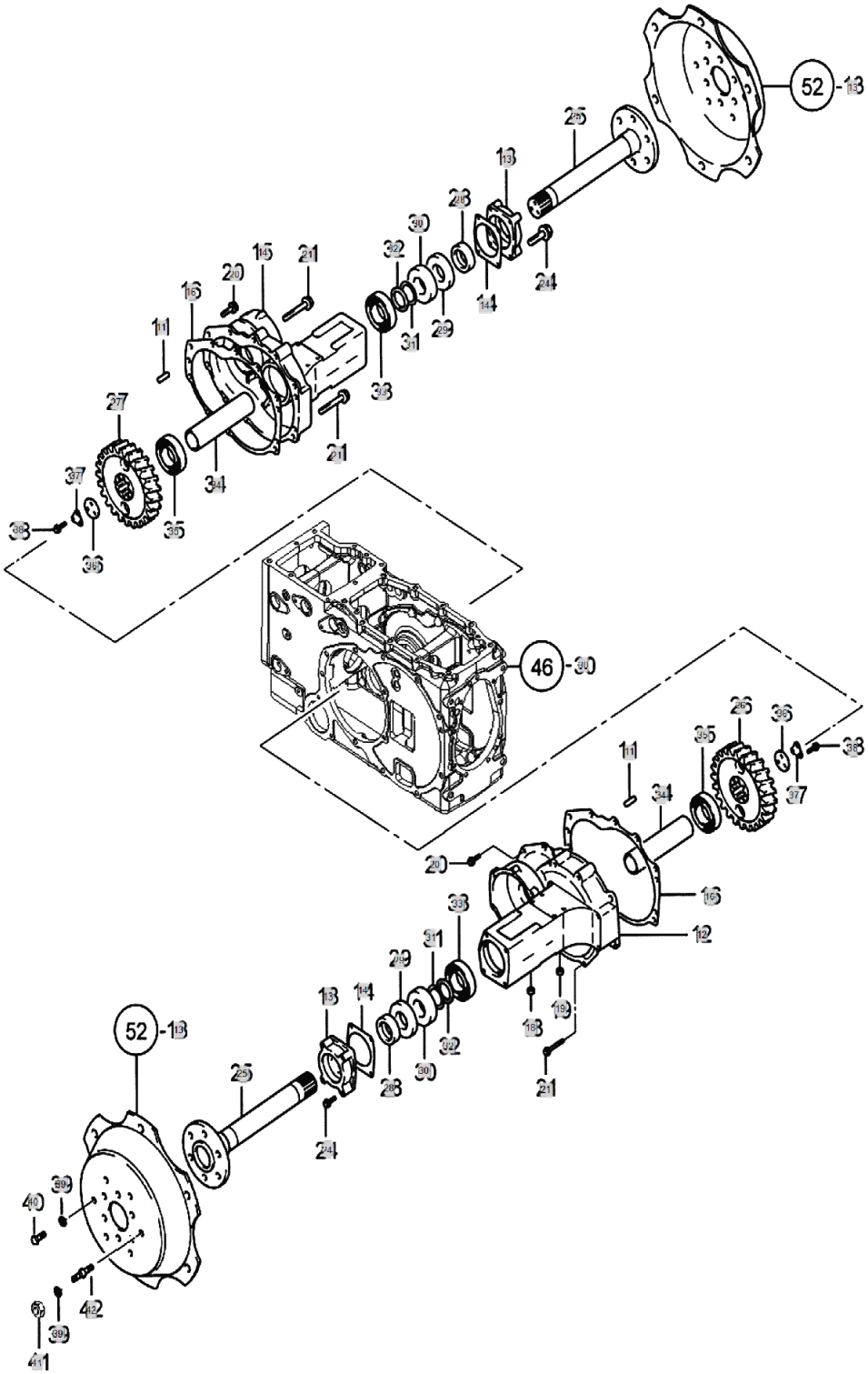

FIG S048 5220R	HOUSING, REAR AXLE	Year/Month 2020/01

KeyNo.	Part Number	Part Name	Quantity	Other
11	22312-100180	PIN, DOWEL (10-18)	4	
12	TN48140000C0	REAR AXLE HOUSING(L)	1	
13	TB29130000A3	CASEOILSEAL	2	
14	TZ48140000A4	PACKING,OILSEALCASE	2	
15	TN48150000E0	REAR AXLE HOUSING(R)	1	
16	TZ48160000A3	PACKING, HOUSING	2	
18	TB26070000A4	PLUG11	6	
19	TB18040000A4	PLUG13	2	
20	26013-120302	HEX BOLT W/WASHER	8	
21	26013-120852	BOLT	12	
24	26013-100552	Bolt, Hexa (10-55)	8	
25	TN48250000A2	SHAFT	2	
26	TN48260000A3	GEARLHREARAXLE	1	
27	TN48270000A3	GEAR(R),REARAXLE.	1	
28	TN48280000A4	BUSH	2	
29	TB29290000A4	OILSEALVC75X100X7	2	
30	TT82070000A3	OILSEAL	2	
31	24321-000600	SEAL,ORING	2	
32	TT85100000A4	O-RING.SPACER	2	
33	24101-062124	Bearing, Ball (#6212)	2	
34	TB29340000A4	SPACER	2	
35	24101-063124	Bearing, Ball (#6312)	2	
36	TB29360000A4	WASHER	2	
37	TB29370000A4	WASHER	2	
38	26013-100322	BOLT	6	
39	TB29430000A4	WASHER	16	
40	TB29440000A4	BOLTM14X35	12	
41	TB29420000A4	NUT M14	4	
42	TT85150000A4	Bolt	4	

FIG S049 5220R	DRIVING PART, REAR AXLE	Year/Month 2020/01

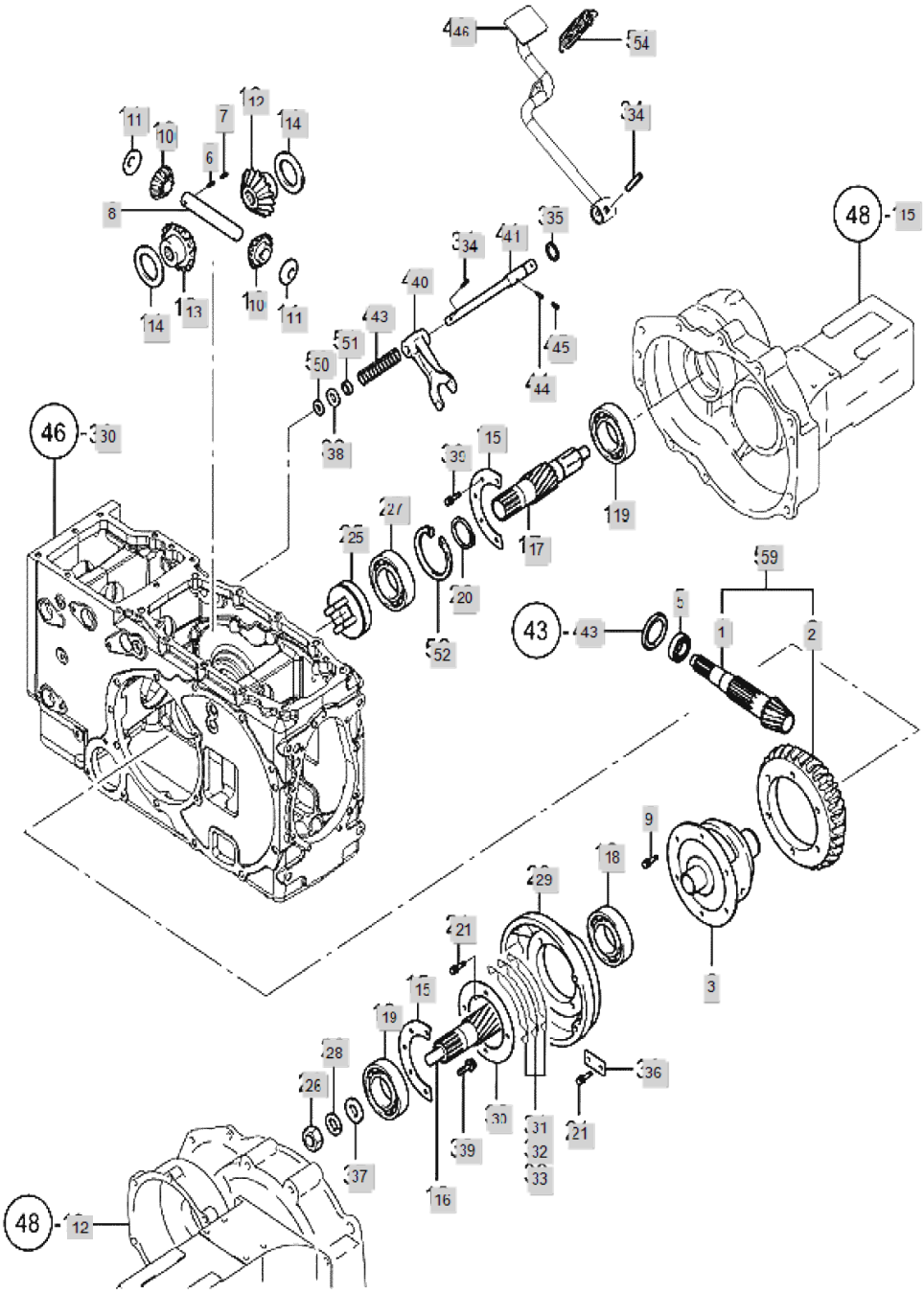

FIG S049 5220R	DRIVING PART, REAR AXLE	Year/Month 2020/01

KeyNo.	Part Number	Part Name	Quantity	Other
1	TN49510000A2	COUNTERSAHFT	1	
2	TN49520000C2	RINGGEAR	1	
3	TN49030000D2	CASE,DIFFERENTIAL -> TA00022799A	1	
5	TT78020000A3	BEARINGNJ307R	1	
6	22312-060360	PIN, DOWEL (6-36)	1	
7	22351-060032	PIN, SPRING (6-32)	1	
8	TF64080000A4	PINIONSHAFT	1	
9	TF64090000A4	BOLT	6	
10	TF64100000A3	PINION	2	
11	TF64110000A4	PINIONLINER	2	
12	TF64120000A3	DIFF.SIDEGEAR(A)	1	
13	TF64130000A3	DIFF.SIDEGEAR(B)	1	
14	TF64140000B4	SIDEGEARLINER	2	
15	TB32150000A4	RETAINER	2	
16	TN49160000A3	PINIONL,FINAL	1	
17	TN4917000SA3	PINIONR,FINAL	1	
18	24101-062114	Bearing, Ball (#6211)	1	
19	TF64190000A4	BALL BEARING (#6308HL1) -> TF64190000A3	2	
20	22242-000500	SNAP RING, SHAFT (Φ50)	1	
21	26013-080202	Bolt, Hexa (8-20)	4	
25	TF64250000B3	THRUST, DIFF-LOCK ASSY	1	
26	26776-220002	NUT	2	
27	24101-060102	BALL BEARING (#6010)	1	
28	22217-220000	WASHER, SPRING (Φ 22)	2	
29	TN49550000B2	CARRIOR	1	
30	TN49590000A4	RETAINER	1	
31	TZ49560000A4	SHIMA	3	
32	TZ49570000A4	SHIMB	3	
33	TZ49580000A4	SHIMC	2	
34	22351-080032	PIN, SPRING (8-32)	2	
35	24311-000160	O-RING, DYNAMIC (Φ16)	1	
36	TB32360000A4	RETAINER	2	
37	TN49370000A4	WASHER	2	
38	TN49380000A4	WASHER	1	
39	26013-080202	Bolt, Hexa (8-20)	10 10	
40	TN49400000A2	FORK DIFFERENTIAL LOCK	1	
41	TN49410000B3		1	
43	TN49430000A4	SPRING	1	
44	22351-080040	PIN, SPRING (8-40)	1	
45	22351-050040	PIN, SPRING (5-04)	1	
46	TA00001510B	PEDAL, DIFF.LOCK	1	
50	22121-140000	WASHER, PLAIN (Φ 14)	1	
51	24421-152507	Seal, Oil (#15-25-07)	1	
52	22252-000800	RING, CIRCLIP (Φ 80)	1	
54	TTB1300000A4	SPRING,RETURN	1	

FIG S049 5220R	DRIVING PART, REAR AXLE	Year/Month 2020/01

KeyNo.	Part Number	Part Name	Quantity	Other
59	TN49500000C9	RING GEAR ASSY	1	

FIG S050 5220R	BRAKE	Year/Month 2020/01

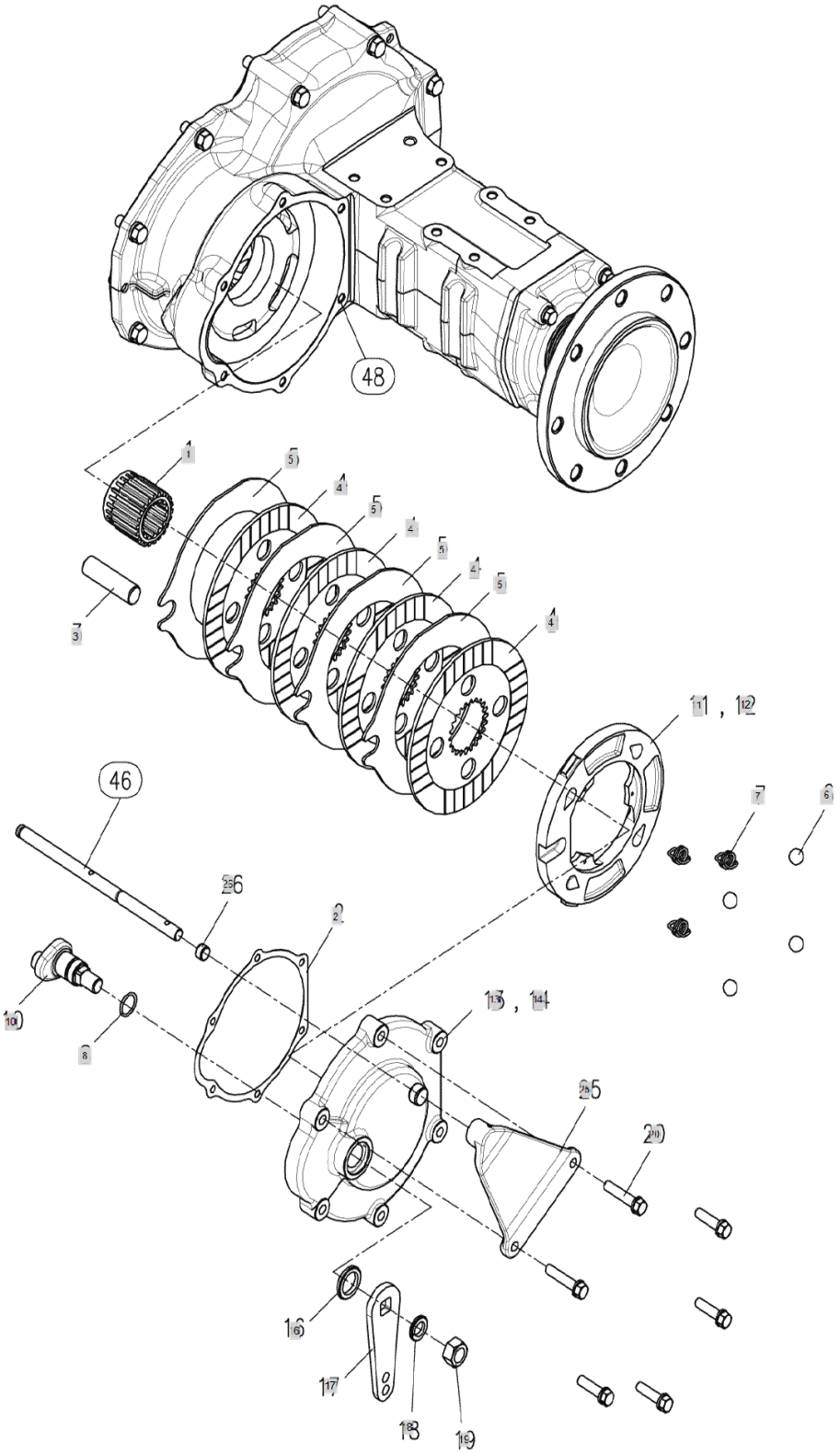

FIG S050 5220R	BRAKE	Year/Month 2020/01

KeyNo.	Part Number	Part Name	Quantity	Other
1	TN50010000A3	HUBSPLINE	2	
2	TZ50020000A4	PACKING	2	
3	TN50030000A4	SHAFT	2	
4	TN50040000A2	FRICTIONPLATE	8	
5	TN50050000A2	PLATE	8	
6	24190-200001	Ball, Steel	8	
7	TN50070000A4	SPRING	6	
8	24311-000210	O-RING, DYNAMIC (Φ21)	2	
10	TN50100000B3	CAP	2	
11	TN50110000B2	CAM PLATE(L)	1	
12	TN50120000B2	CAM PLATE (R)	1	
13	TN50130000A1	COVER(L),BRAKE	1	
14	TN50140000A1	COVER(R),BRAKE	1	
15	26013-100402	Bolt, Hexa (10-40)	10	
16	24421-253505	Seal, Oil (#25-35-05)	2	
17	TN50170000A4	LEVER	2	
18	22217-160000	WASHER, SPRING (Φ 16)	2	
19	26736-160002	HEXNUT	2	
20	26013-100502	BOLT,W/SW	2	
25	TN50250000C3	SHAFTHOLDER	1	
26	TT70080000A4	BUSH	1	

FIG S053 5220R	BRAKE, CLUTCH PEDAL	Year/Month 2020/01

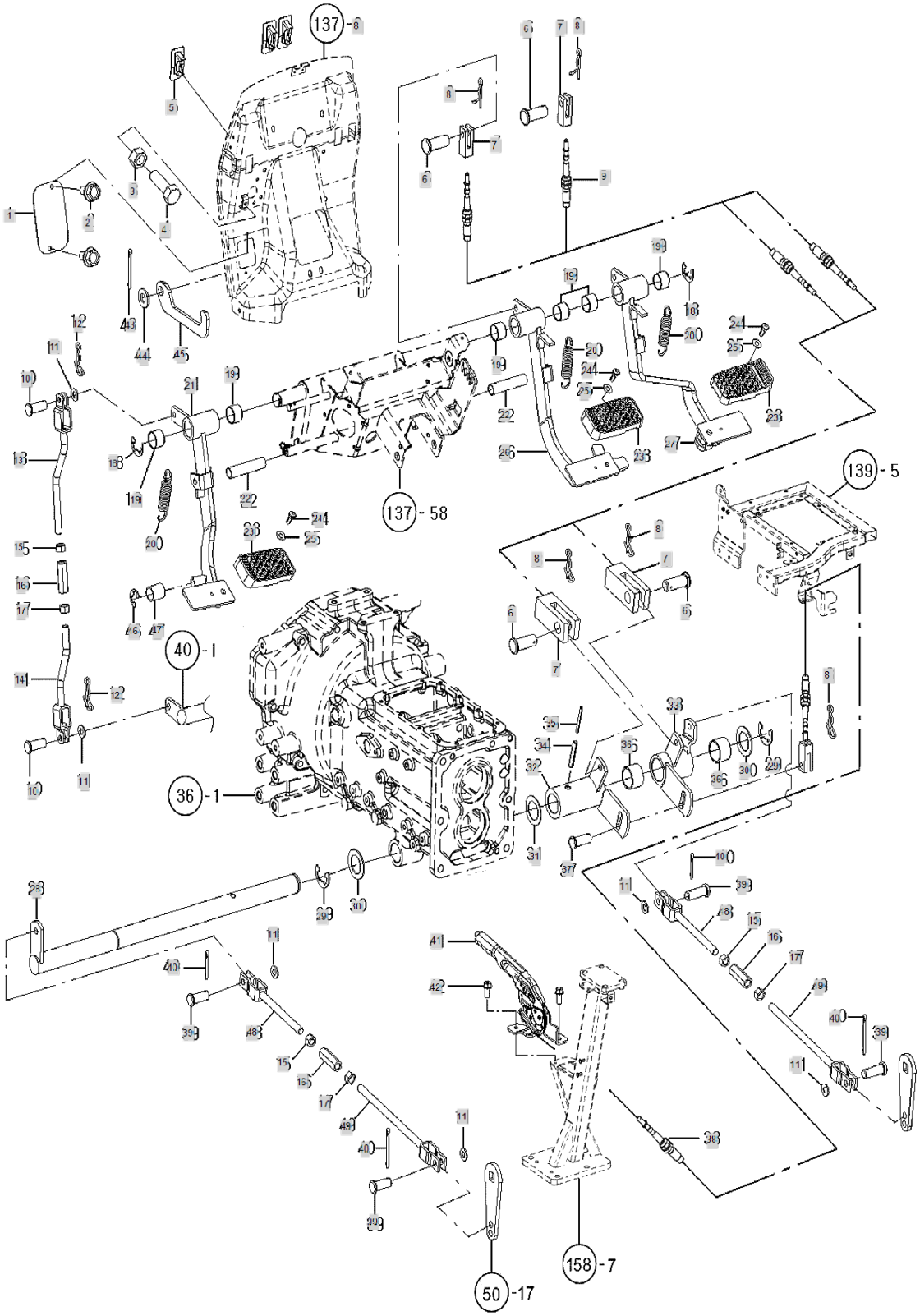

FIG S053 5220R	BRAKE, CLUTCH PEDAL	Year/Month 2020/01

KeyNo.	Part Number	Part Name	Quantity	Other
1	TA00017501A	COVER	1	
2	26106-060122	HEX BOLT (6-12)	2	
3	26716-080002	NUT,HEX (D8)	1	
4	26116-080252	BOLT7T(8X25)	1	
5	TCB6100000A4	BOOTS, PEDAL	3	
6	22487-100200	PIN, HEAD (10-20)	4	
7	TW43030000A4	SUTTLE CLEVIS A	4	
8	RR51230000A4	SNAP PIN	5	
9	TA00002285A	BRAKE CABLE	2	
10	TT83010000A4	TURN BUCKLE, 10X70	2	
11	22137-100000	WASHER, PLAIN (Φ 10)	6	
12	RR64050000A4	Pin, Come-Off Snap (Φ8)	2	
13	TA00017497A	CLUTCH ROD UPPER	1	
14	TA00017498B	CLUTCH ROD LOWER	1	
15	26716-120002	BOLT,CYLINDER HEAD(B)	3	
16	TT67010000A4	TURN BUCKLE	3	
17	TT67040000A4	NUT.LH	3	
18	22272-000190	RING, CIRCLIP (Φ 19)	2	
19	TC73010200A4	BUSH25*28*20	6	
20	TC73090000A4	RETURN SPRING	3	
21	TA00002795B	CLUTCH PEDAL ASS'Y	1	
22	TCB6300000A3	PIPE	2	
23	TC73050000A3	PEDALHEADCOVER	3	
24	TC73030000A4	RIVET(PEDALHEAD)	3	
25	TC73040000A4	WASHER(REVET)	3	
26	TA00002785B	BRAKE PEDAL L ASS'Y	1	
27	TA00002784C	BRAKE PEDAL R ASS'Y	1	
28	TA00017369A	SHAFT, BRAKE	1	
29	22272-000240	RING, CIRCLIP (Φ 24)	2	
30	TB35120000B4	WASHER B	2	
31	TB35110000B4	WASHER A	1	
32	TA00017352B	BRAKE LINE(L)REAR	1	
33	TA00017353B	BRAKE LINE(R)REAR	1	
34	22351-080050	PIN, SPRING (8-50)	1	
35	22351-050050	PIN, SPRING (5-05)	1	
36	TB26240000A4	BUSH	2	
37	22487-100260	PIN, HEAD (10-26)	1	
38	TA00017354A	CABLE, PARKING BRAKE -> TA00017354C	1	
39	TT41090000A4	PIN10X23	4	
40	22417-200300	PIN , COTTER (2-30)	4	
41	TA00001403A	PARKING BRAKE	1	
42	26106-080202	SQR FLANGE BOLT	2	
43	22417-250300	PIN , COTTER (2-30)	1	
44	22137-080000	WASHER, PLAIN (Φ 08)	1	
45	TA00018293A	ROCK(CLUTCH PEDAL)	1	

FIG S053 5220R	BRAKE, CLUTCH PEDAL	Year/Month 2020/01

KeyNo.	Part Number	Part Name	Quantity	Other
46	22272-000120	RING, CIRCLIP (Φ 12)	1	
47	TA00002799A	PIPE	1	
48	NT53250000B4		2	
49	NT53240000A4	ROD[L]	2	

FIG S067 5220R	LEVER, MAIN SHIFT	Year/Month 2020/01

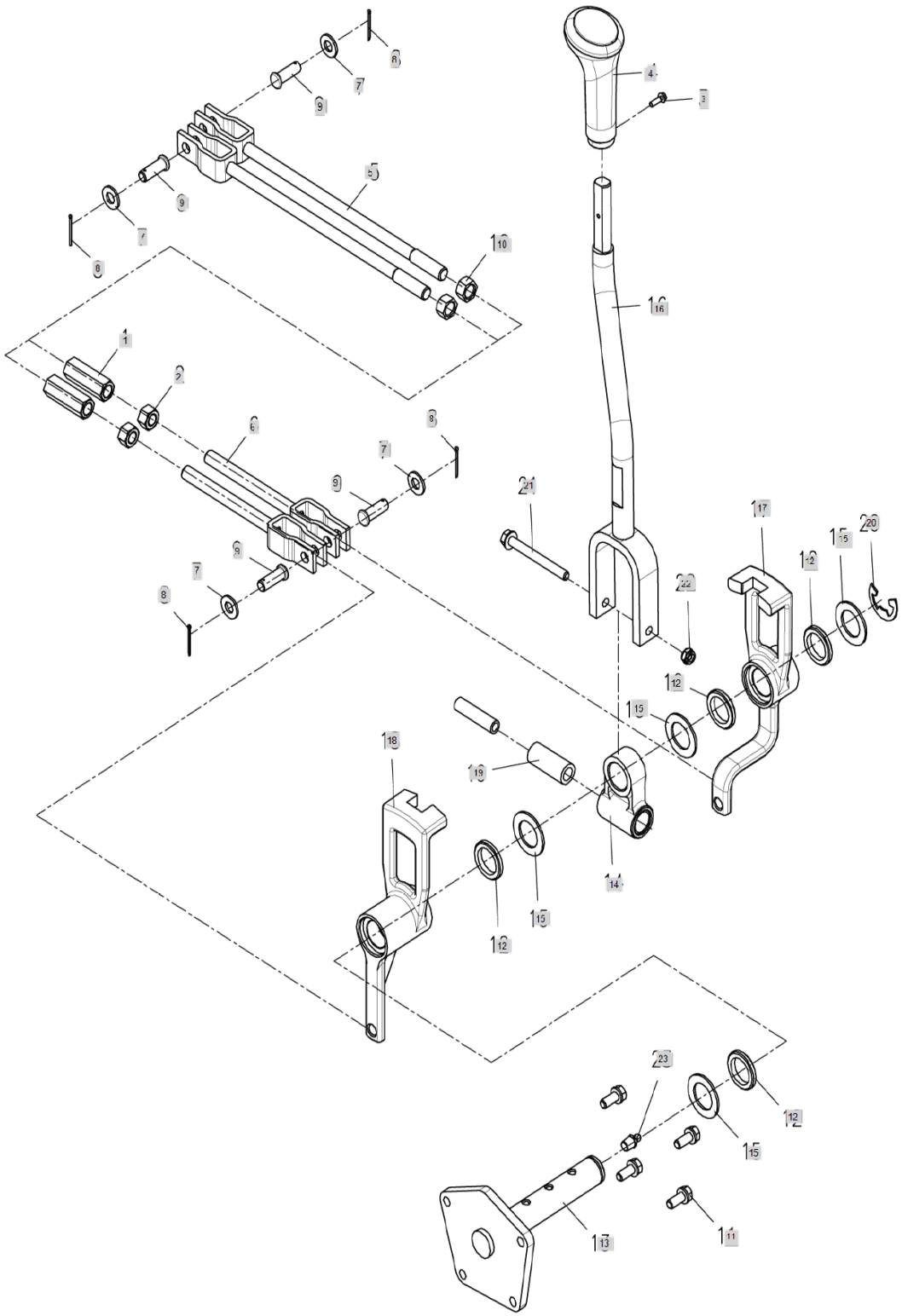

FIG S067 5220R	LEVER, MAIN SHIFT	Year/Month 2020/01

KeyNo.	Part Number	Part Name	Quantity	Other
1	TT67010000A4	TURN BUCKLE	2	
2	TT67040000A4	NUT.LH	2	
3	26023-040162	SCREW	1	
4	TA00056009A	MAIN KNOB	1	
4-1	TA00016326B	KNOB, MAIN SHIFT	1	deleted/삭제
5	TN53250000A4	ROD(R)	2	
6	TA00018709A	LEFT LOAD	2	
7	22137-100000	WASHER, PLAIN (Φ 10)	4	
8	22417-200250	PIN , COTTER (2-25)	4	
9	22487-100240	PIN, HEAD (10-24)	4	
10	26716-120002	BOLT,CYLINDER HEAD(B)	2	
11	26013-080252	Bolt, Hexa (8-25)	4	
12	24430-253505	Seal, Oil (#25-35-05)	4	
13	NT67610000A2	SHAFT,MAINSHIFTLEVER	1	
14	NT67620000A4	HOLDER,MAINSHIFTLEVER	1	
15	NT67630000A4	WASHER	4	
16	TA00017375C	LEVER, MAIN SHIFT	1	
17	NT67650000B2	ARM-B	1	
18	NT67660000B2	ARM-A	1	
19	FT67670000A4	RUBBERSPRING	1	
20	22272-000190	RING, CIRCLIP (Φ 19)	1	
21	26106-080752	SCREW,HEXFLANGEHEADCAP	1	
22	26347-080002	Unut	1	
23	24764-020000	GREASENIPPLE	1	

FIG S099-1 5220R	HYD PUMP	Year/Month 2020/01

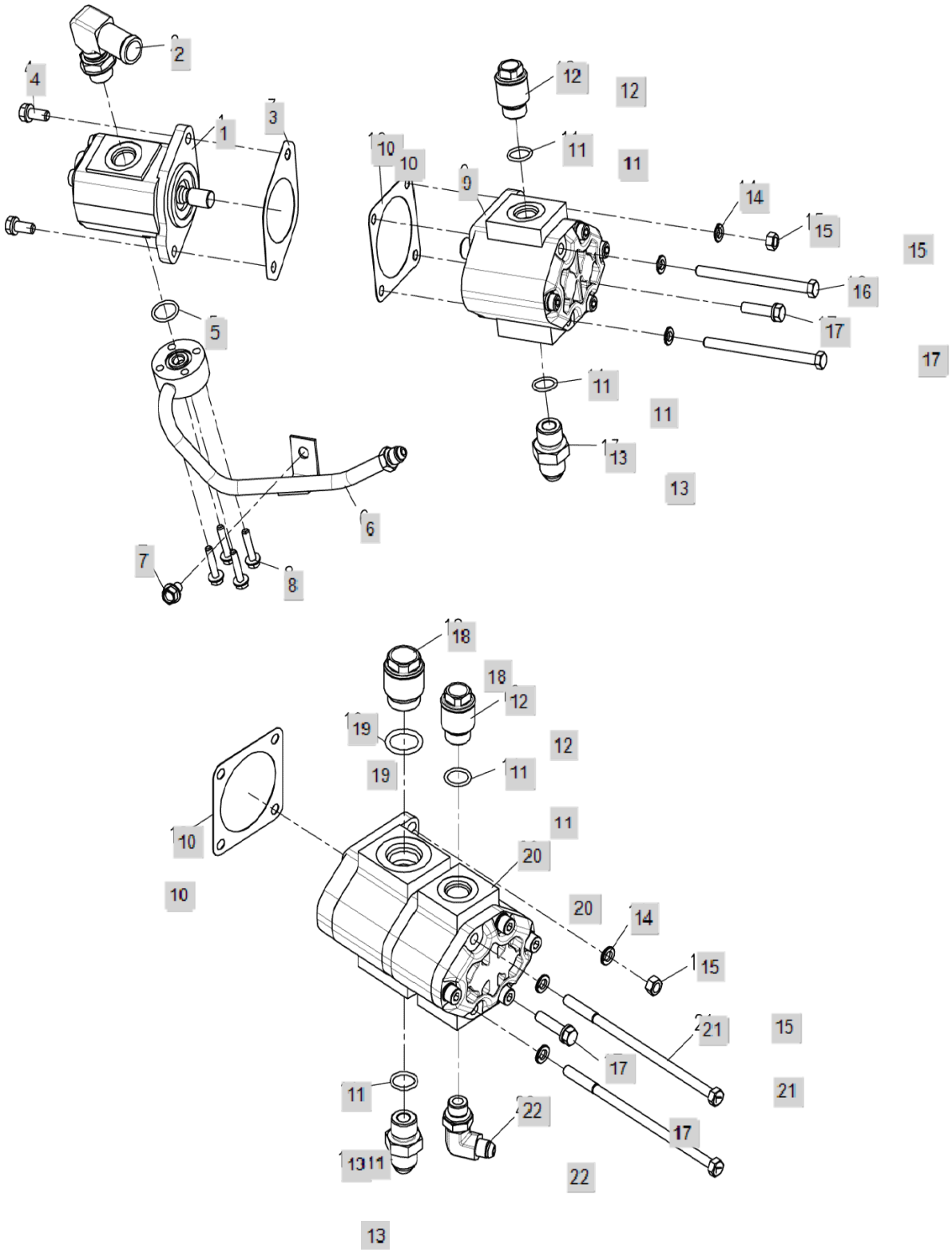

FIG S099-1 5220R	HYD PUMP	Year/Month 2020/01

KeyNo.	Part Number	Part Name	Quantity	Other
1	NT34690000A3	HYD,PUMP7CC	1	
2	TRC9140000A3	ELBOW	1	
3	TZG1700000A4	PACKING	1	
4	26013-080202	Bolt, Hexa (8-20)	2	
5	24311-000200	O-RING, DYNAMIC (Φ20)	1	
6	TA00000962B	PIPE ASS'Y, P.S.T	1	
7	26106-080122	Bolt, Hexa (8-12)	1	
8	26106-060302	Bolt, Hexa (6-30)	4	
9	TA00001404A	HYD PUMP 13CC	1	
10	HH02080000A4	PACKING,HYD.PUMP	1	
11	24311-000180	O-RING, DYNAMIC (Φ18)	2	
12	TCC9040000A4	JOINT M22	1	
13	CVE4020000A4	NIPPLE	1	
14	22217-080000	WASHER, SPRING (Φ 08)	3	
15	26716-080002	NUT,HEX (D8)	1	
16	26116-081152	HEX BOLT	2	
17	26013-080352	SCREW,CAPTIVEWASHERCAP	1	
18	FBB4500000A4	JOINT 3/4	AR	
19	24311-000240	O-RING, DYNAMIC (Φ24)	AR	
20	TA00025513A	HYD PUMP	AR	
21	FL99120000B4	BOLT	AR	
22	NT34620000A4	ELBOW	AR	

FIG S099-2 5220R	HYD PUMP	Year/Month 2020/01

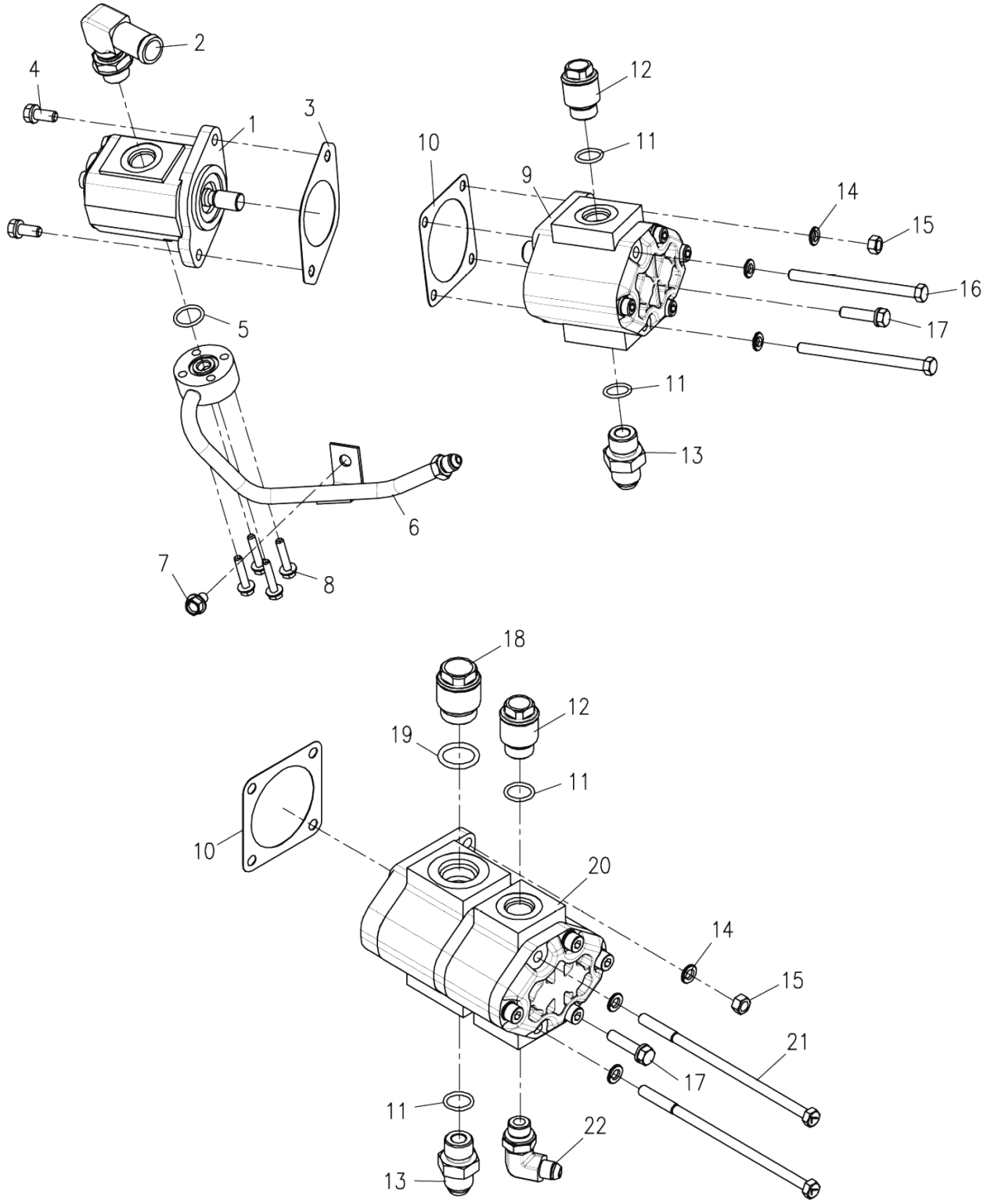

FIG S099-2 5220R	HYD PUMP	Year/Month 2020/01

KeyNo.	Part Number	Part Name	Quantity	Other
10	HH02080000A4	PACKING,HYD.PUMP	1	
11	24311-000180	O-RING, DYNAMIC (Φ18)	2	
12	TCC9040000A4	JOINT M22	1	
13	CVE4020000A4	NIPPLE	1	
15	26716-080002	NUT,HEX (D8)	1	
17	26013-080352	SCREW,CAPTIVEWASHERCAP	1	
18	FBB4500000A4	JOINT 3/4	1	
19	24311-000240	O-RING, DYNAMIC (Φ24)	1	
20	TA00025513A	HYD PUMP	1	
21	FL99120000B4	BOLT	2	
22	NT34620000A4	ELBOW	1	

FIG S101 5220R	CASE, HYD CYLINDER	Year/Month 2020/01

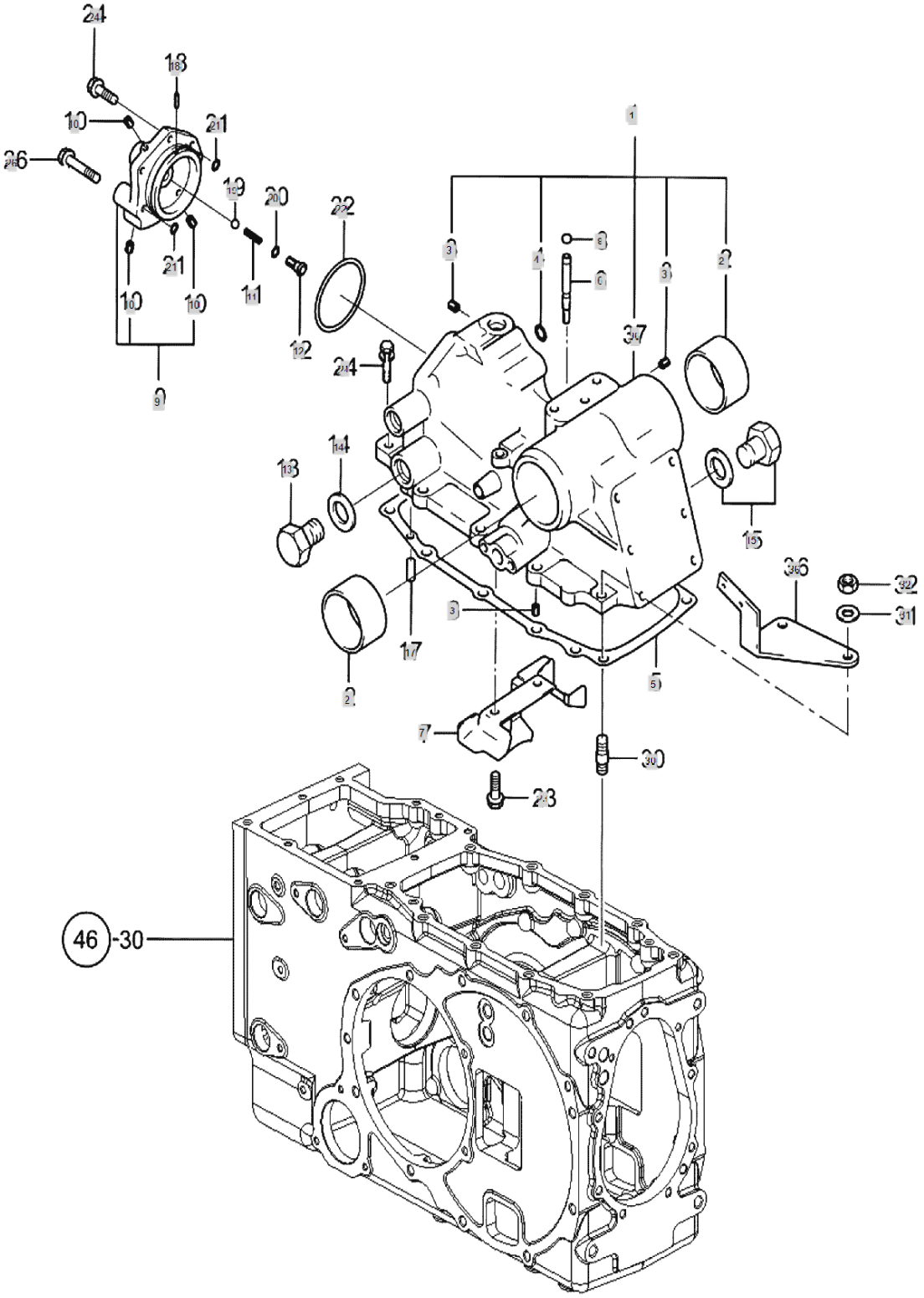

FIG S101 5220R	CASE, HYD CYLINDER	Year/Month 2020/01

KeyNo.	Part Number	Part Name	Quantity	Other
1	TA00000611A	HYDRAULIC CYLINDER ASS'Y(0PORT,P)	1	
2	TTA1020000A4	BUSH	2	
3	23871-020000	Plug, Pipe	3	
4	24311-000110	O-RING, DYNAMIC (Φ11)	1	
5	TZA1050000A3	PACKING,HYD.CYL.CASE	1	
6	FTA1060000A4	AIR BREATHER	1	
7	TTA1070000A3	OILGUIDE	1	
8	FTA1080000A4	PLUG, BREATHER	1	
9	TTA1090000A9	HEADCLTLINDER	1	
10	23871-010000	PLUG	3	
11	TTA1110000A4	SPRING,CHECKVALVE	1	
12	TTA1120000A4	PLUG,CHECKVALVE	1	
13	TTA1130000A4	PLUG	1	
14	TTA1140000A4	PACKING	1	
15	NTA1130000A4	PLUG	1	
17	22312-100180	PIN, DOWEL (10-18)	2	
18	22351-040016	PIN, SPRING (4X16)	1	
19	24190-130003	BALLSTEEL	1	
20	24315-000120	O-RING	1	
21	24315-000140	O-RING	2	
22	24325-000800	O-RING	1	
23	26013-080122	Bolt, Hexa (8-12)	2	
24	26013-120352	SCREW,CAPTIVEWASHERCAP	5	
26	26013-120552	BOLT,W/SW	1	
30	26216-120352	STEELBOLT	5	
31	22217-120000	WASHER, SPRING (Φ 12)	5	
32	26716-120002	BOLT,CYLINDER HEAD(B)	5	
36	FTA1360000B3	SwitchBracket	1	
37	TA00000611A	HYDRAULIC CYLINDER ASS'Y(0PORT,P)	1	

FIG S102 5220R	IND PTO VALVE SUPPORT	Year/Month 2020/01

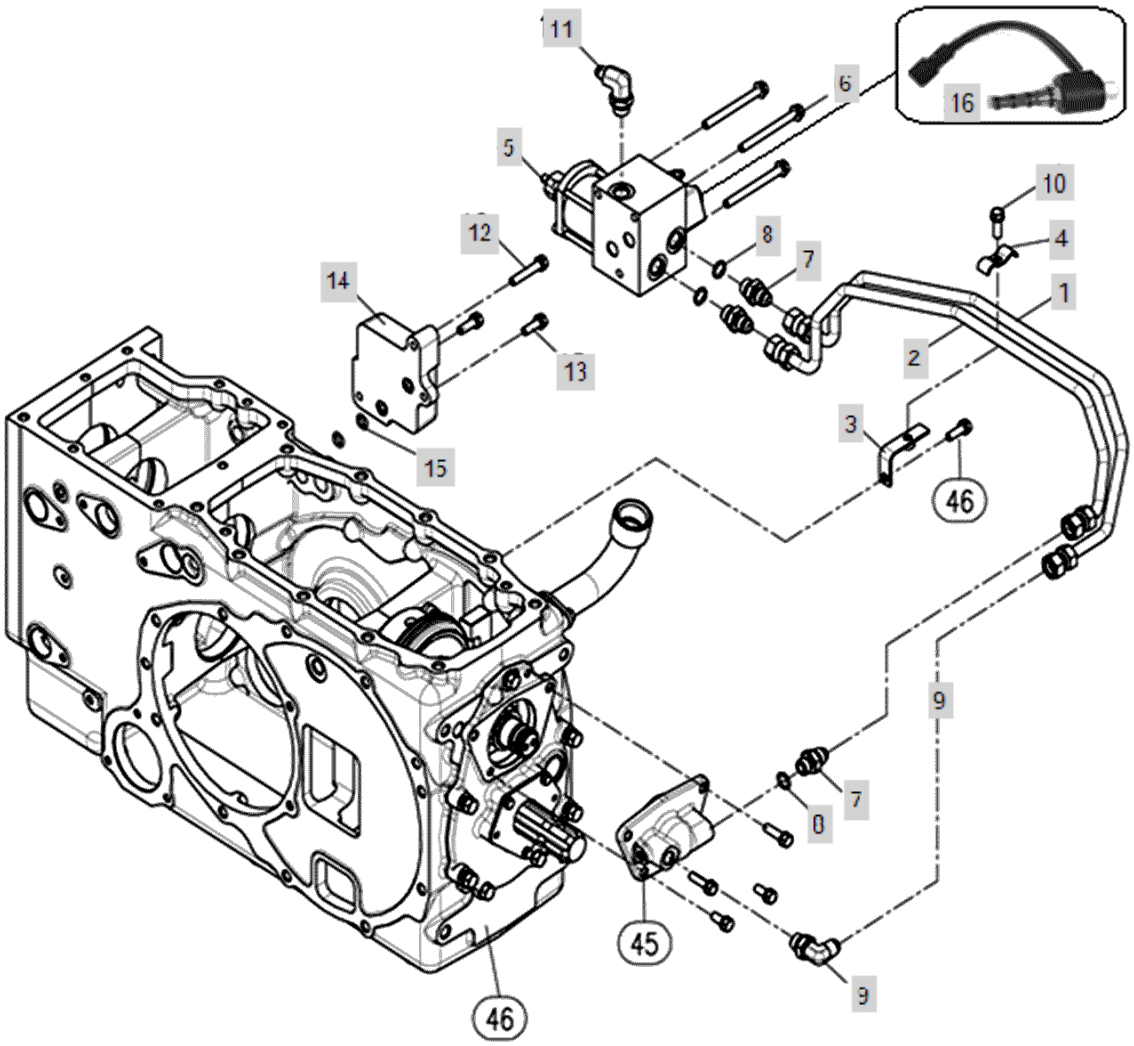

FIG S102 5220R	IND PTO VALVE SUPPORT	Year/Month 2020/01

KeyNo.	Part Number	Part Name	Quantity	Other
1	NTA2010000A2	PTO Pipe, Lo-Press	1	
2	NTA2020000A2	Pipe, Hi-Press	1	
3	NTA2030000A4	Pipe Support(lower)	1	
4	NTA2040000A4	Pipe Support(upper)	1	
5	NTA2100000A2	PTO VALVE	1	
6	26106-080902	SCREW,HEXFLANGEHEADCAP	3	
7	TTA3880000A4	Adapt, Connect PF3/8	2	
8	24311-000140	O-RING, DYNAMIC (Φ14)	2	
9	CEE4050000A4	ELBOW (3/8)	1	
10	26013-080252	Bolt, Hexa (8-25)	1	
11	NT34620000A4	ELBOW	1	
12	26013-080452	SCREW,CAPTIVEWASHERCAP	1	
13	26013-080252	Bolt, Hexa (8-25)	2	
14	NT45880000A2	VALVE BLOCK	1	
15	24311-000120	O-RING, DYNAMIC (Φ12)	2	
16	TA00032230A	SOLENOID VALVE	1	

FIG S103 5220R	S.C.V. SUPPORT	Year/Month 2020/01

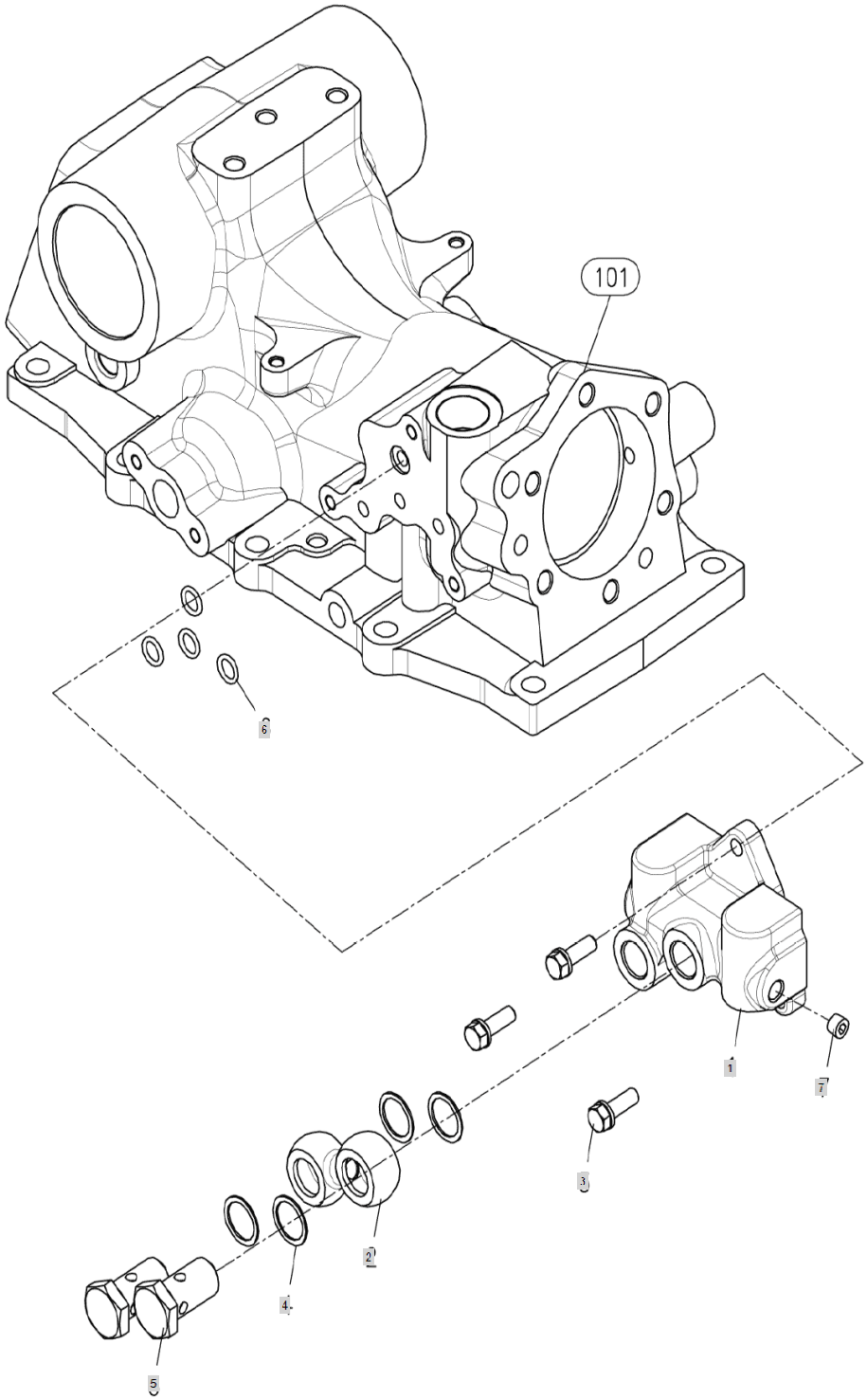

FIG S103 5220R	S.C.V. SUPPORT	Year/Month 2020/01

KeyNo.	Part Number	Part Name	Quantity	Other
1	TTA3350000A2	S.C.VSUPPORT	1	
2	TZA3410000B3	PIPE, RETURN	1	
3	26013-080252	Bolt, Hexa (8-25)	3	
4	23414-200026	WASHER, PLAIN (Φ 20)	4	
5	TTB4180000A4	BOLT	2	
6	24315-000120	O-RING	3	
7	23871-010000	PLUG	1	

FIG S104 5220R	PISTON ASS'Y	Year/Month 2020/01

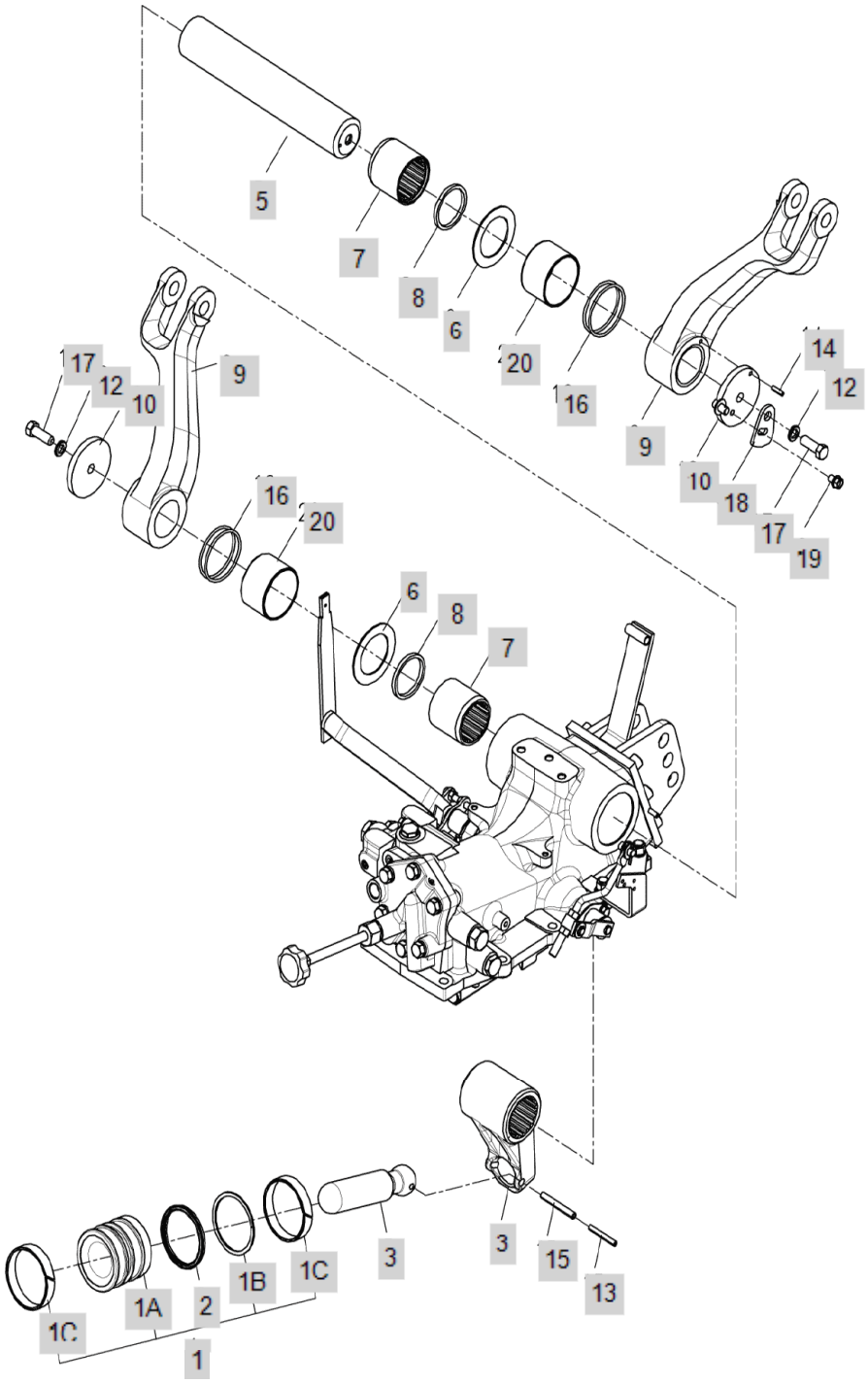

FIG S104 5220R	PISTON ASS'Y	Year/Month 2020/01

KeyNo.	Part Number	Part Name	Quantity	Other
1	TNA4010000C9	HYD PISTON ASSY	1	
1A	TNA401A000C3	PISTON	1	
1B	TB36400000A4	RING, BACKUP	1	
1C	TNA401C000A4	RING,WEAR	2	
2	TNA4020000A9	U-PACKING	1	
3	TTA4030000A3	ROD,PISTON	1	
4	TTA4040000B3	CRANK, LIFT	1	
5	TTA4050000B3	LIFT LINK SHAFT	1	
6	TTA4060000A4	WASHERTHRUST	2	
7	TTA4070000A4	SLEEVELIFTLINKSHAFT	2	
8	TTA4080000A4	SEAL,SPLINE	2	
9	TTA4090000A3	LIFTARM	2	
10	FTA4100000A4	ARM, FEEDBACK	1	
11	TTA4110000A4	RETAINER,LIFTSHAFT	1	
12	22217-120000	WASHER, SPRING (Φ 12)	2	
13	22351-050063	PIN, SPRING (5-06)	1	
14	22351-060016	PIN, SPRING (6-16)	1	
15	22351-080063	PIN, SPRING (8-63)	1	
16	24321-000650	O-RING, FIX(Φ65)	4	
17	26116-120352	BOLT	2	
18	TA00018705A	CAM	1	
19	26106-080122	Bolt, Hexa (8-12)	1	
20	TTA1020000A4	BUSH	2	

FIG S106 5220R	CONTROL VALVE	Year/Month 2020/01

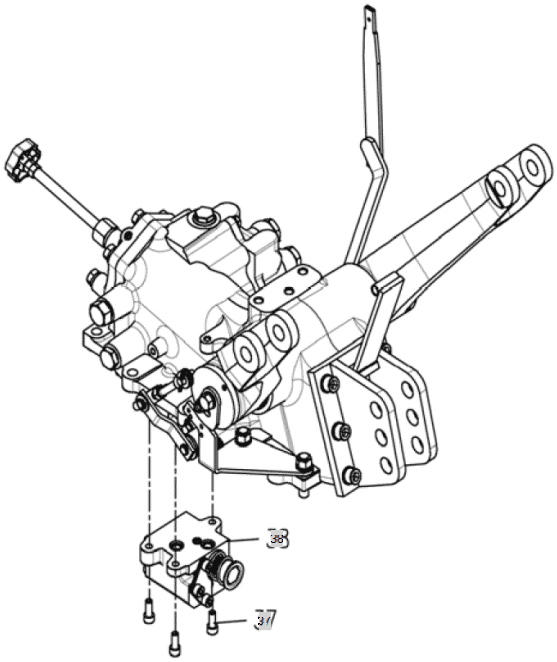

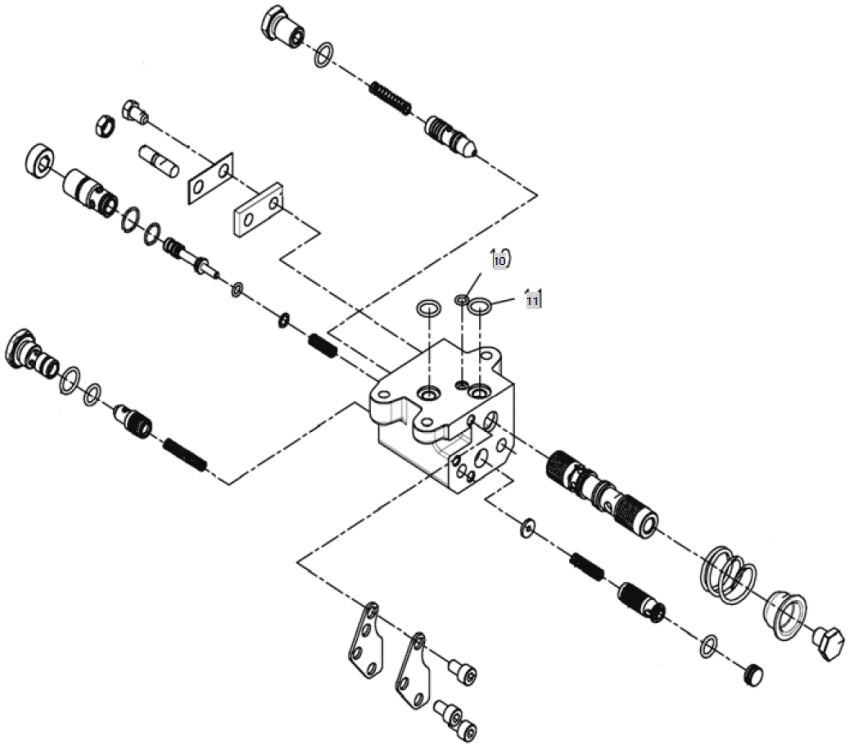

FIG S106 5220R	CONTROL VALVE	Year/Month 2020/01

KeyNo.	Part Number	Part Name	Quantity	Other
10	TTA6100000A9	O-RING(P)	1	
11	24311-000140	O-RING, DYNAMIC (Φ14)	2	
37	26450-080262	CAP BOLT	3	
38	TTA6010000A3	CONTROL VALVE ASSY	1	

FIG S108 5220R	RELIEF VALVE	Year/Month 2020/01

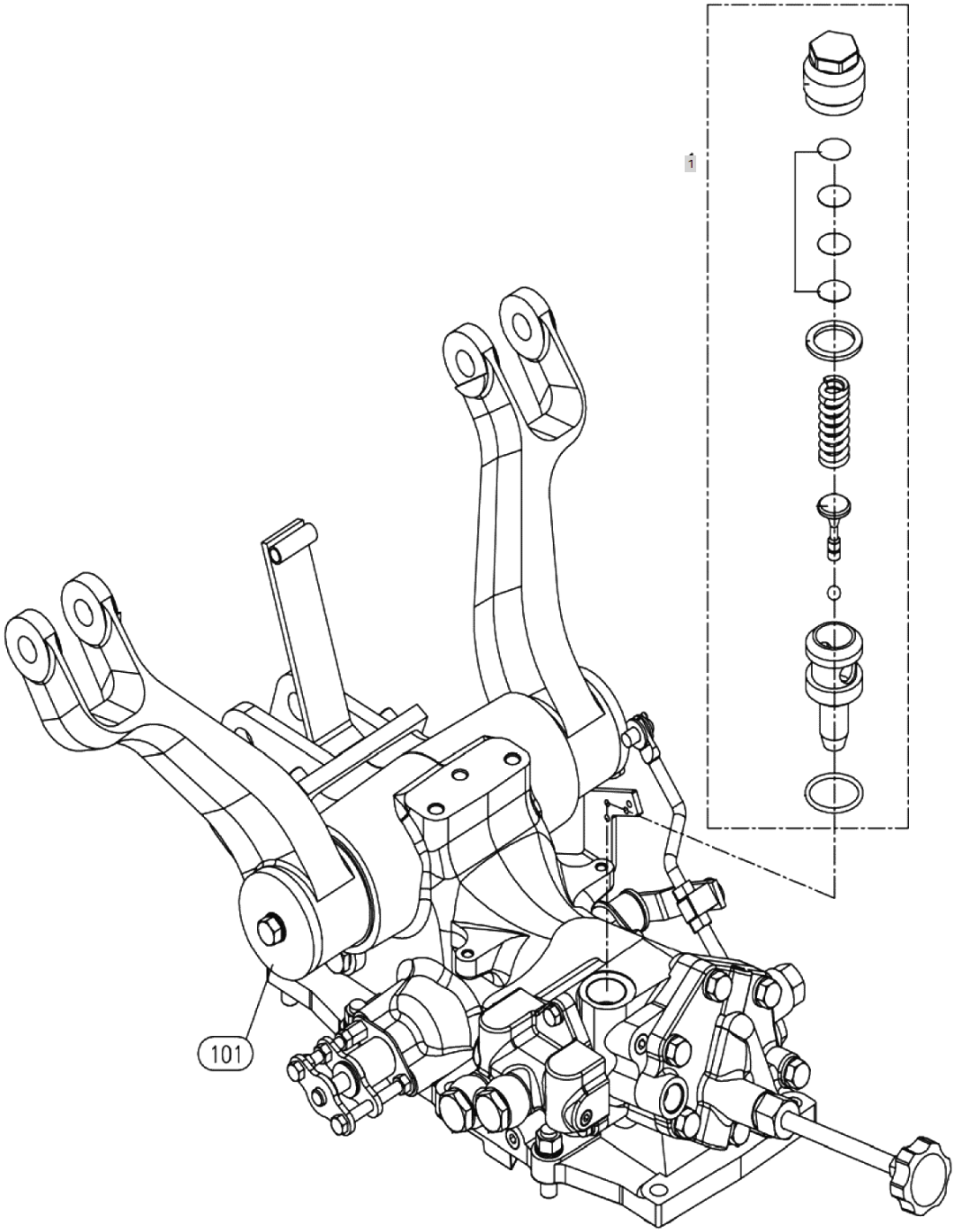

FIG S108 5220R	RELIEF VALVE	Year/Month 2020/01

KeyNo.	Part Number	Part Name	Quantity	Other
1	TTA8010000A3	VALVECMP.RELIEF	1	

FIG S109 5220R	STOP VALVE	Year/Month 2020/01

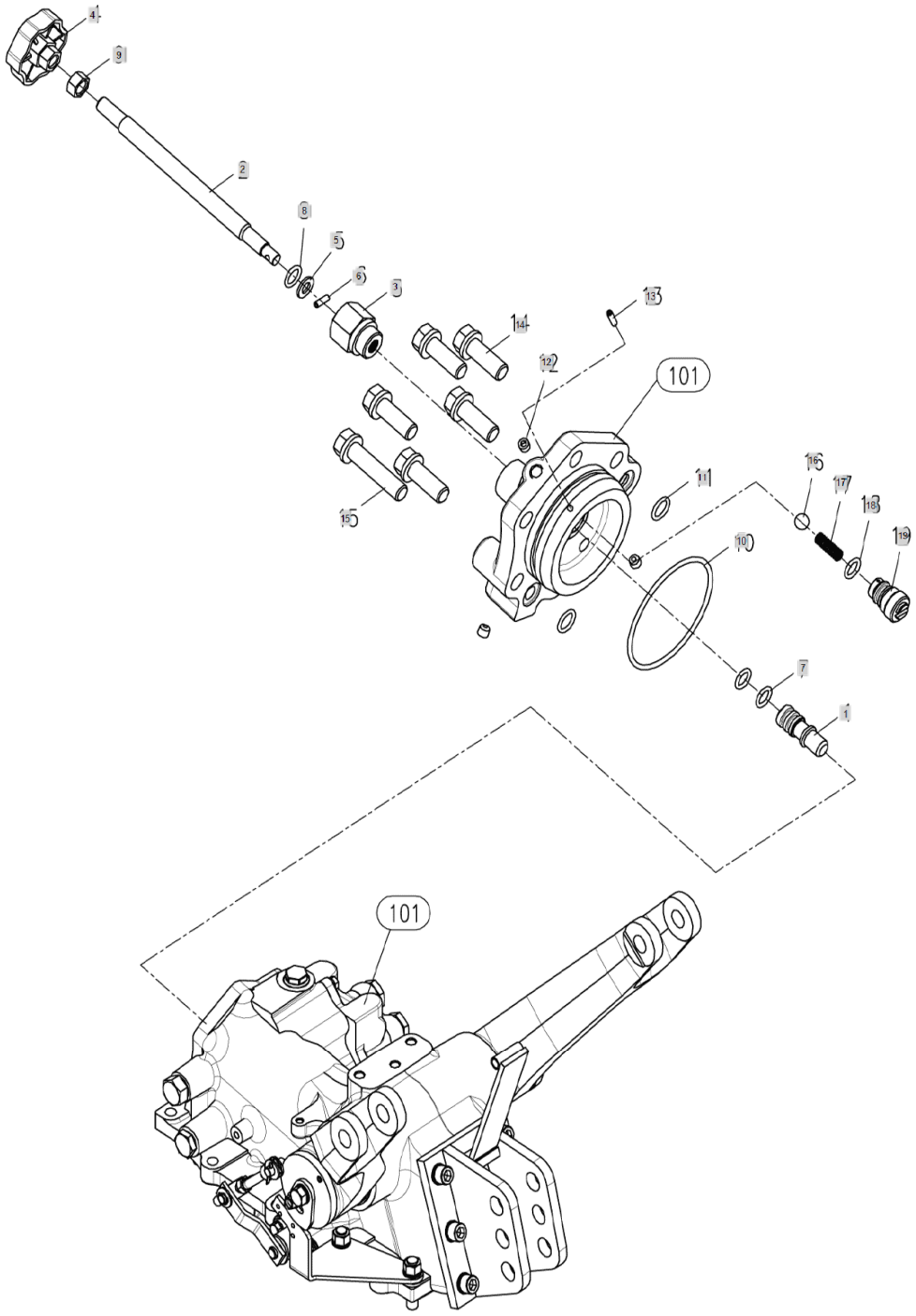

FIG S109 5220R	STOP VALVE	Year/Month 2020/01

KeyNo.	Part Number	Part Name	Quantity	Other
1	TTA9010000A4	STOPVALVE	1	
2	TNA9020000A4	BOLT	1	
3	TTA9030000A4	HOLDER	1	
4	TTA9040000A4	KNOB	1	
5	22117-080000	WASHER, PLAIN (Φ 08)	1	
6	22351-040012	PIN, SPRING (4-01)	1	
7	24311-000110	O-RING, DYNAMIC (Φ11)	2	
8	24311-000120	O-RING, DYNAMIC (Φ12)	1	
9	26716-100002	Nut, Hexa (Φ10)	1	
10	24325-000800	O-RING	1	
11	24315-000140	O-RING	2	
12	23871-010000	PLUG	3	
13	22351-040016	PIN, SPRING (4X16)	1	
14	26013-120352	SCREW,CAPTIVEWASHERCAP	5	
15	26013-120552	BOLT,W/SW	1	
16	24190-130003	BALLSTEEL	1	
17	TTA1110000A4	SPRING,CHECKVALVE	1	
18	24315-000120	O-RING	1	
19	TTA1120000A4	PLUG,CHECKVALVE	1	

FIG S110 5220R	SAFETY VALVE	Year/Month 2020/01

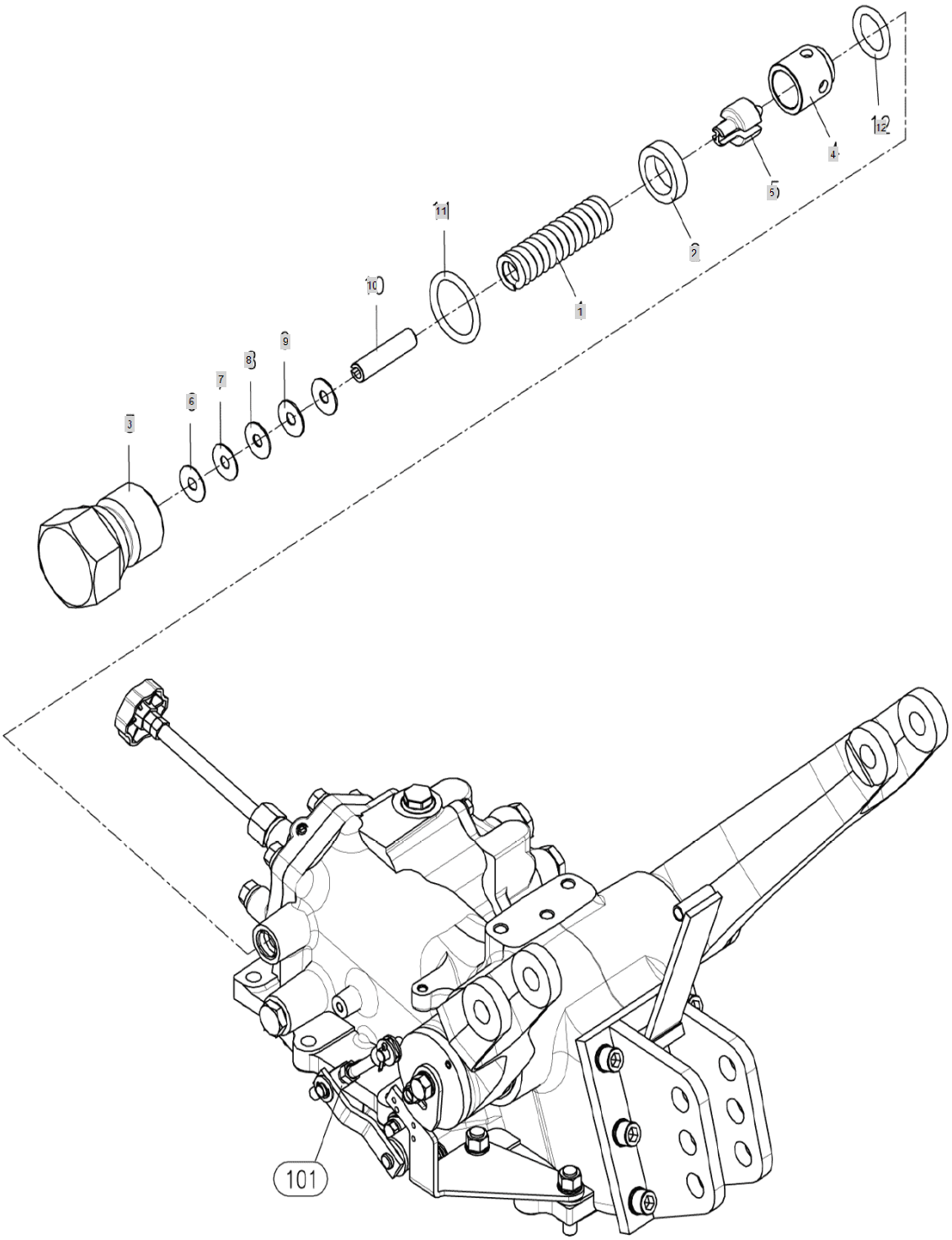

FIG S110 5220R	SAFETY VALVE	Year/Month 2020/01

KeyNo.	Part Number	Part Name	Quantity	Other
1	TTB0010000A4	SPRING,RELIEFVALVE	1	
2	TTB0020000A4	SCREW,VALVESEAT	1	
3	TTB0030000B4	PLUG,RELIEF VALVE	1	
4	TTB0040000A4	SEAT,SAFETYVALVE	1	
5	TTB0050000A4	POPPET,SAFETYVALVE	1	
6	TB36670000A4	SHIM	2	
7	TB36680000A4	SHIM	2	
8	TB36690000A4	SHIM	2	
9	TB36700000A4	SHIM	3	
10	22351-060025	PIN, SPRING (6-25)	1	
11	24311-000180	O-RING, DYNAMIC (Φ18)	1	
12	24311-000120	O-RING, DYNAMIC (Φ12)	1	

FIG S111 5220R	HYD CONTROL	Year/Month 2020/01

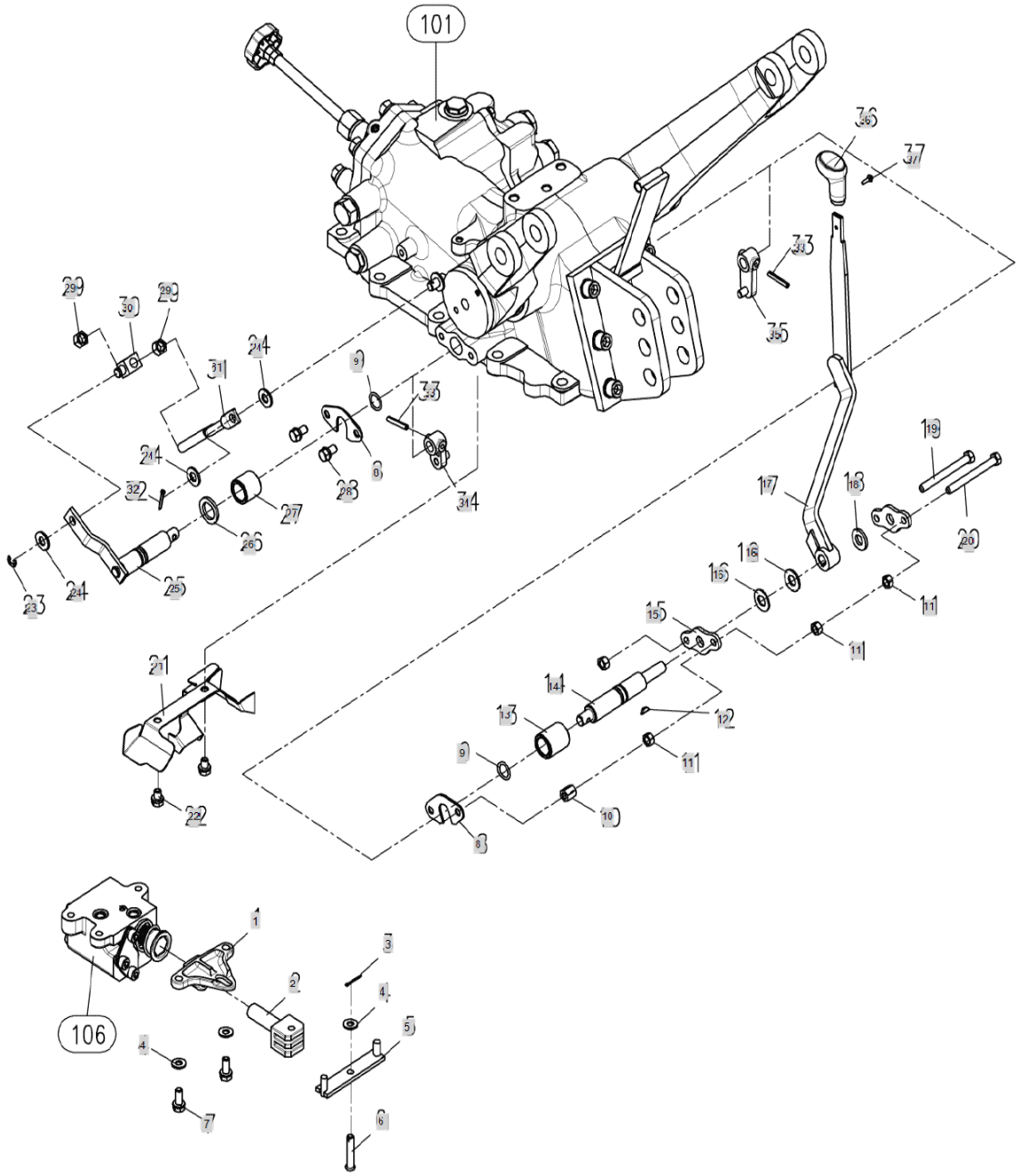

FIG S111 5220R	HYD CONTROL	Year/Month 2020/01

KeyNo.	Part Number	Part Name	Quantity	Other
1	TTB1080000A3	PLATECONTRDL	1	
2	TTB1070000A4	RODCONTRDL	1	
3	22417-200200	PIN , COTTER (2-20)	1	
4	22137-080000	WASHER, PLAIN (Φ 08)	3	
5	TTB1170000A4	BAR,DRAFTCONTROL	1	
6	22487-080350	PIN, HEAD (08-35)	1	
7	26013-080202	Bolt, Hexa (8-20)	2	
8	TTB1090000A4	PLATEA	2	
9	24311-000160	O-RING, DYNAMIC (Φ16)	2	
10	TTB1670000A4	NUT	1	
11	26716-080002	NUT,HEX (D8)	4	
12	22522-030130	KEY, WOODRUFF (03-13)	1	
13	TZB1040000A4	COLLAR	1	
14	TZB1140000A3	SHAFT	1	
15	TTB1050000A4	PLATE	2	
16	TT01140000A4	SPRINGWASHER	2	
17	TA00001047B	LEVER, P-CONTROL	1	
18	TTB1320000A4	PLATE,FRICTION	1	
19	26116-080802	BOLTM8X80	1	
20	26116-080804	HEXAGONBOLT	1	
21	TTA1070000A3	OILGUIDE	1	
22	26013-080122	Bolt, Hexa (8-12)	2	
23	22272-000070	RING, CIRCLIP (Φ 07)	1	
24	22137-100000	WASHER, PLAIN (Φ 10)	3	
25	TZB1180000A3	FEEDBACK ARM	1	
26	TZB1330000A4	PLATE	1	
27	TZB1210000A4	COLLAR	1	
28	26013-080162	Bolt, Hexa (8-16)	3	
29	26716-100002	Nut, Hexa (Φ10)	2	
30	TTB1240000A4	ADJUSTER	1	
31	TTB1270000D3	LOAD P	1	
32	22417-300200	PIN , COTTER (3-20)	1	
33	22351-050032	PIN, SPRING (5-03)	2	
34	TTB1130000A4	ARM(PCF)	1	
35	TTB1230000A4	ARM,POSITIONCONTROL	1	
36	TA00026033A	KNOB, POSITION CONTROL -> TA00015831A	1	
37	26023-040162	SCREW	1	

FIG S115. 5220R	HYD PIPING (2)	Year/Month 2020/01

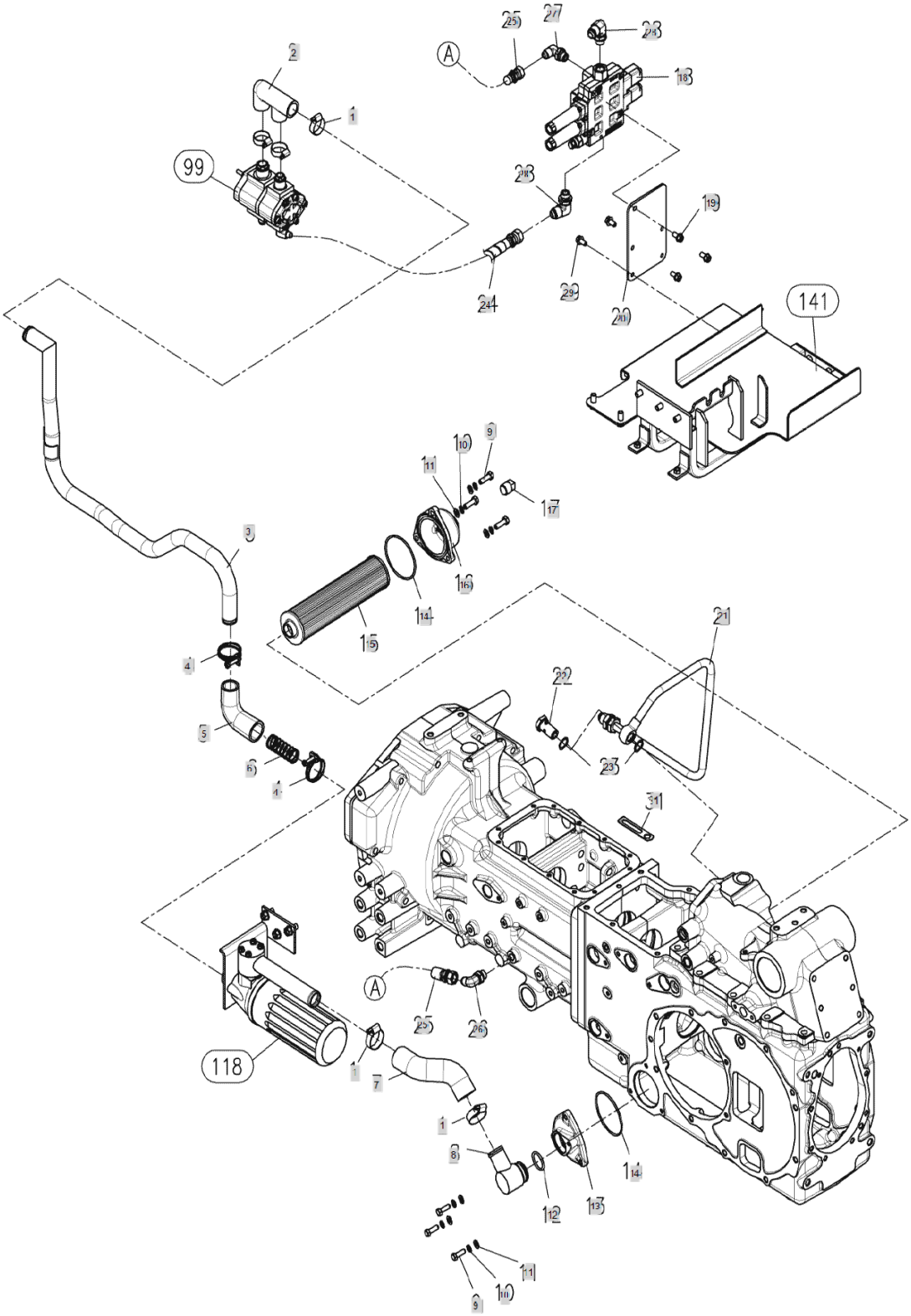

FIG S115. 5220R	HYD PIPING (2)	Year/Month 2020/01

KeyNo.	Part Number	Part Name	Quantity	Other
1	23000-041000	HOSECLAMP	5	
2	FBB4510000A3	HOSE, LOWER PRESSURE	1	
3	TA00025517A	PIPE ASS'Y	1	
4	23010-044000	HOSEBAND	2	
5	TA00017333A	HOSE, LOW PRESSURE	1	
6	TTB4360000A4	SPRINGA	1	
7	TA00000922A	HOSE, LOWER PRESSURE	1	
8	FTB4080000B4	PIPE(R)ASSY, LOWER PRESSURE	1	
9	26116-080252	BOLT7T(8X25)	6	
10	22217-080000	WASHER, SPRING (Φ 08)	6	
11	22137-080000	WASHER, PLAIN (Φ 08)	6	
12	24311-000320	O-RING, DYNAMIC (Φ32)	1	
13	TA00000916A	SCREEN COVER (LH)	1	
14	24321-000850	ORING(G85)	2	
15	TNB4380000A3	HYDSTRAINER	1	
16	TB38300000A3	SCREENCOVER(L)	1	
17	TB38330000A4	TAPERFLUG	1	
18	TA00026056A	FRONT SCV ASSY	1	
19	26106-080122	Bolt, Hexa (8-12)	3	
20	TA00026064A	SCV/V BRACKET	1	
21	TA00017885B	HIGH PIPE REAR	1	
22	TTB4180000A4	BOLT	1	
23	23414-200026	WASHER, PLAIN (Φ 20)	2	
24	TA00026594A	HOSE HIGH PRESSURE F	1	
25	TA00017888A	HYD HOSE 1/2"	1	
26	TA00018066A	LOCK NUT ELBOW 90D 3/8-1/4	1	
27	TA00022104B	ELBOW (M18XP1.5_PF3/8)	1	
28	TA00026065A	ELBOW 90 3/8-1/2	2	
29	26106-080162	SCREW,HEXFLANGEHEADCAP	2	
31	TCD5320000A4	Clamp, Wire D	1	

FIG S118 5220R	HYD FILTER	Year/Month 2020/01

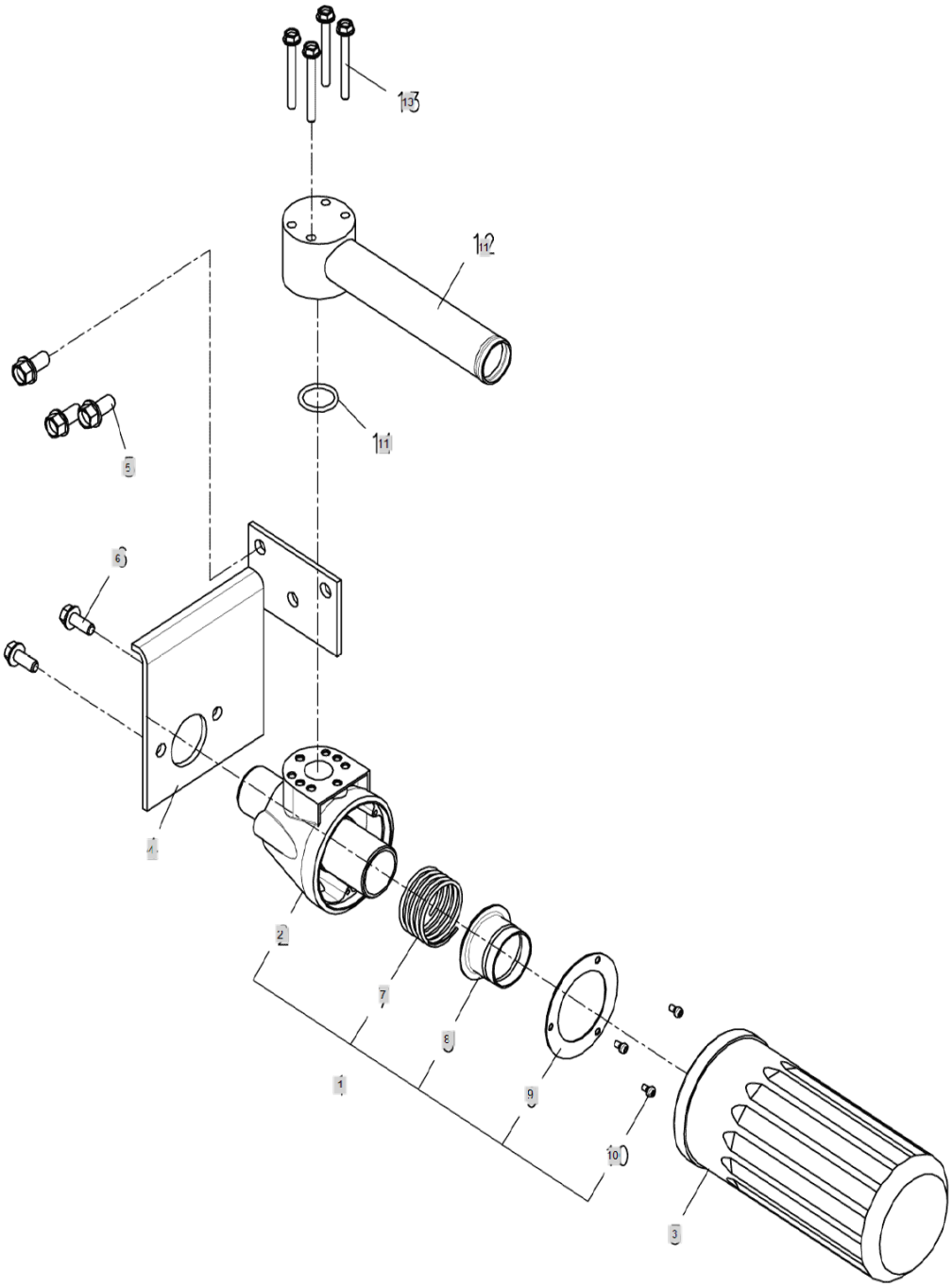

FIG S118 5220R	HYD FILTER	Year/Month 2020/01

KeyNo.	Part Number	Part Name	Quantity	Other
1	TTB8020000A3	COVER,FILTER ASSY	1	
2	TTB8020011A3	COVER: FILTER	1	
3	TA00025525A	FILTER, HYD OIL (20R/20C SERIES)	1	
4	NTB8040000A3	FILLTERBRACKET	1	
5	26106-100202	HEX BOLT, (10-20)	3	
6	26106-080162	SCREW,HEXFLANGEHEADCAP	2	
7	TA00000857A	SPRING	1	
8	TA00000856A	GUIDE	1	
9	TA00000855A	STAY	1	
10	26022-040082	SCREW AND WASHER ASSEMBLY	3	
11	23010-044000	HOSEBAND	4	
12	TA00017333A	HOSE, LOW PRESSURE	1	
13	26106-060552	HEX FLANGE BOLT	4	

FIG S119 5220R	ELE'C WIRING	Year/Month 2020/01

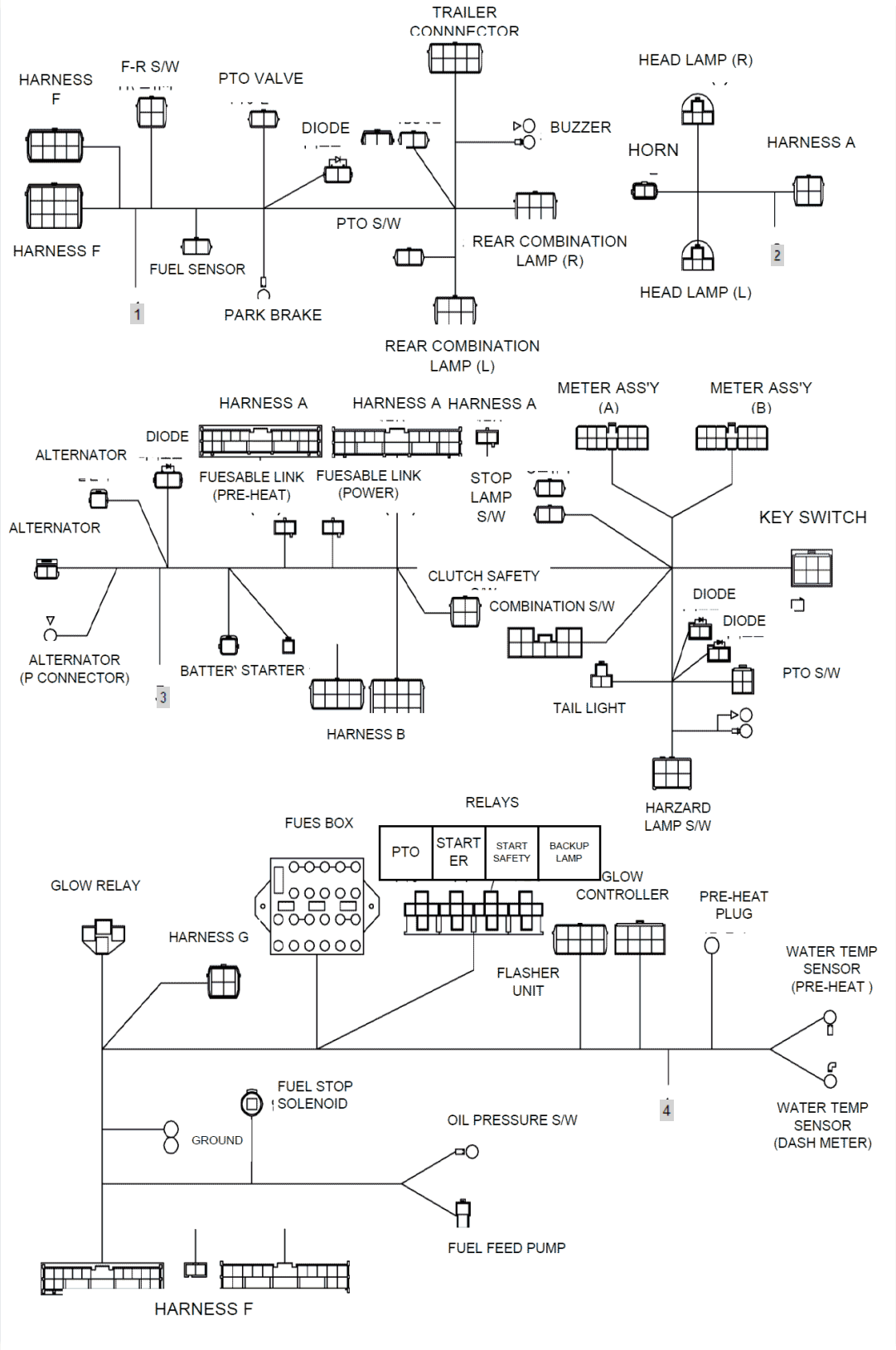

FIG S119 5220R	ELE'C WIRING	Year/Month 2020/01

KeyNo.	Part Number	Part Name	Quantity	Other
1	HA00000217B	WIRE HARNESS B	1	
2	HA00000411A	HARNESS G	1	
3	HA00000218B	WIRE HARNESS F	1	
4	HA00000540A	HARNESS A	1	
5	26716-060002	HEX NUT (Φ6)	4	
14	TTB9140000A9	FUSE5A	3	
15	TTB9150000A9	FUSE10A	4	
16	CEH3170500A4	FUSE 20A	5	
30	CEH3160000A4	FUSIBLE LINK 0.85	2	
37	HA00000414B	BATTERY CABLE (+)	1	
38	HA00000415A	BATTERY CABLE (-)	1	
39	TB39260000A4	BAND	6	
42	TTB9420000A4	Band, Wire (250mm)	10	
43	CEH3370000A4	NYLON BAND 350	1	
49	TTB9490000A4	TAPPINGSCREW	4	
51	22137-060000	WASHER , PLAIN	1	
53	26106-060122	HEX BOLT (6-12)	3	
54	26106-060162	HEXFLANGEBOLT	4	
64	TTB9640000A4	RUBBERCOVER	1	
65	26347-060002	NUT6	1	
66	26106-060162	HEXFLANGEBOLT	1	
71	22217-060000	WASHER, SPRING (Φ 06)	4	
78	CQH3120000A4	WIRE HARNESS H	1	
79	26716-050002	Nut, Hexa (Φ5)	1	

FIG S124 5220R	BATTERY	Year/Month 2020/01

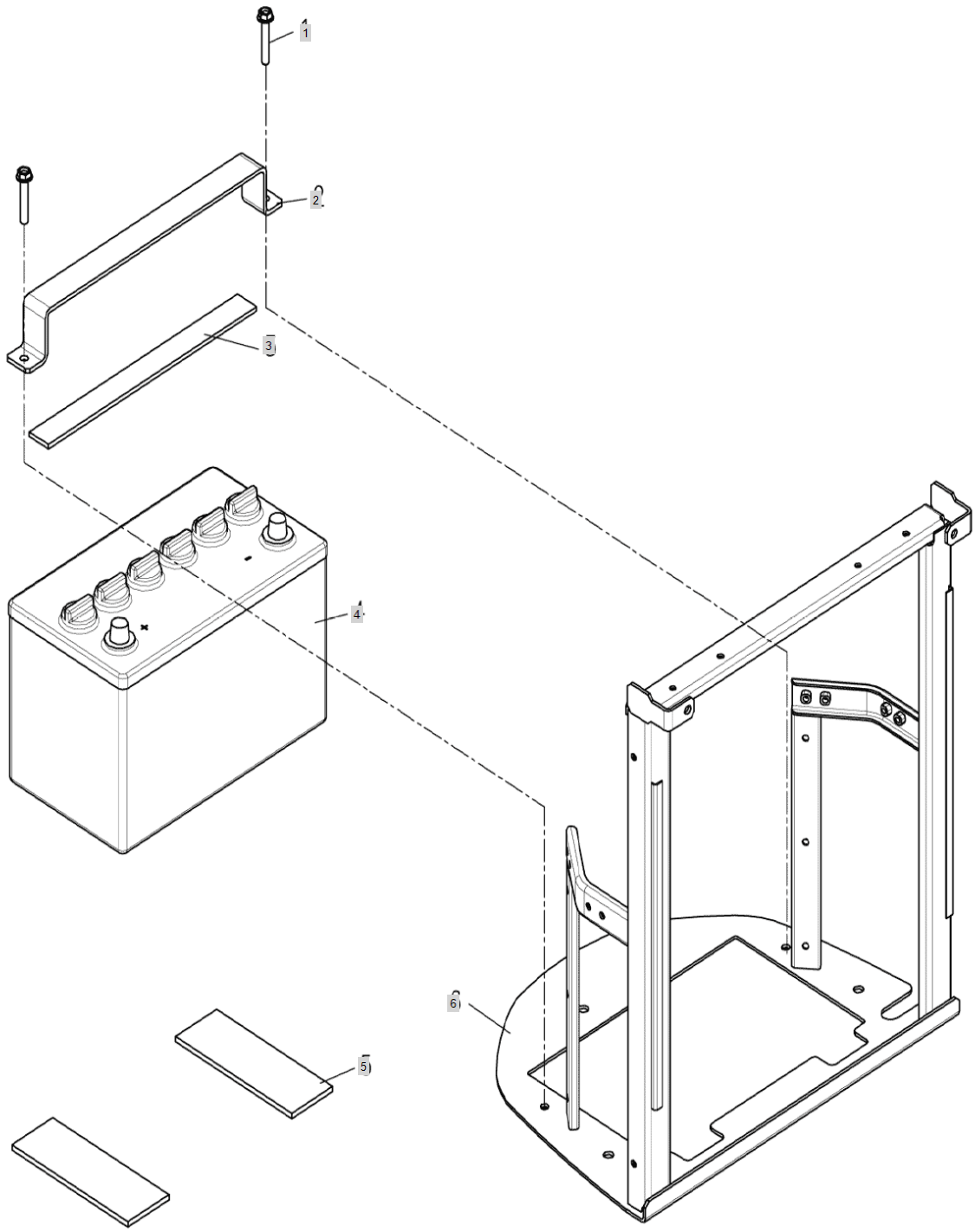

FIG S124 5220R	BATTERY	Year/Month 2020/01

KeyNo.	Part Number	Part Name	Quantity	Other
1	26106-080502	SCREW,HEXFLANGEHEADCAP	2	
2	TA00023070A	BRACKET	1	
3	TA00024221A	PAD, BATTERY BRACKET	1	
4	CEH2060000A3	BATTERY75D-MF	1	
5	TTC4010000A4	TANKRUBBER,DUSTPROOF	2	
6	TA00025520B	FRAME ASS'Y GRILL	1	

FIG S125 5220R	SWITCHES	Year/Month 2020/01

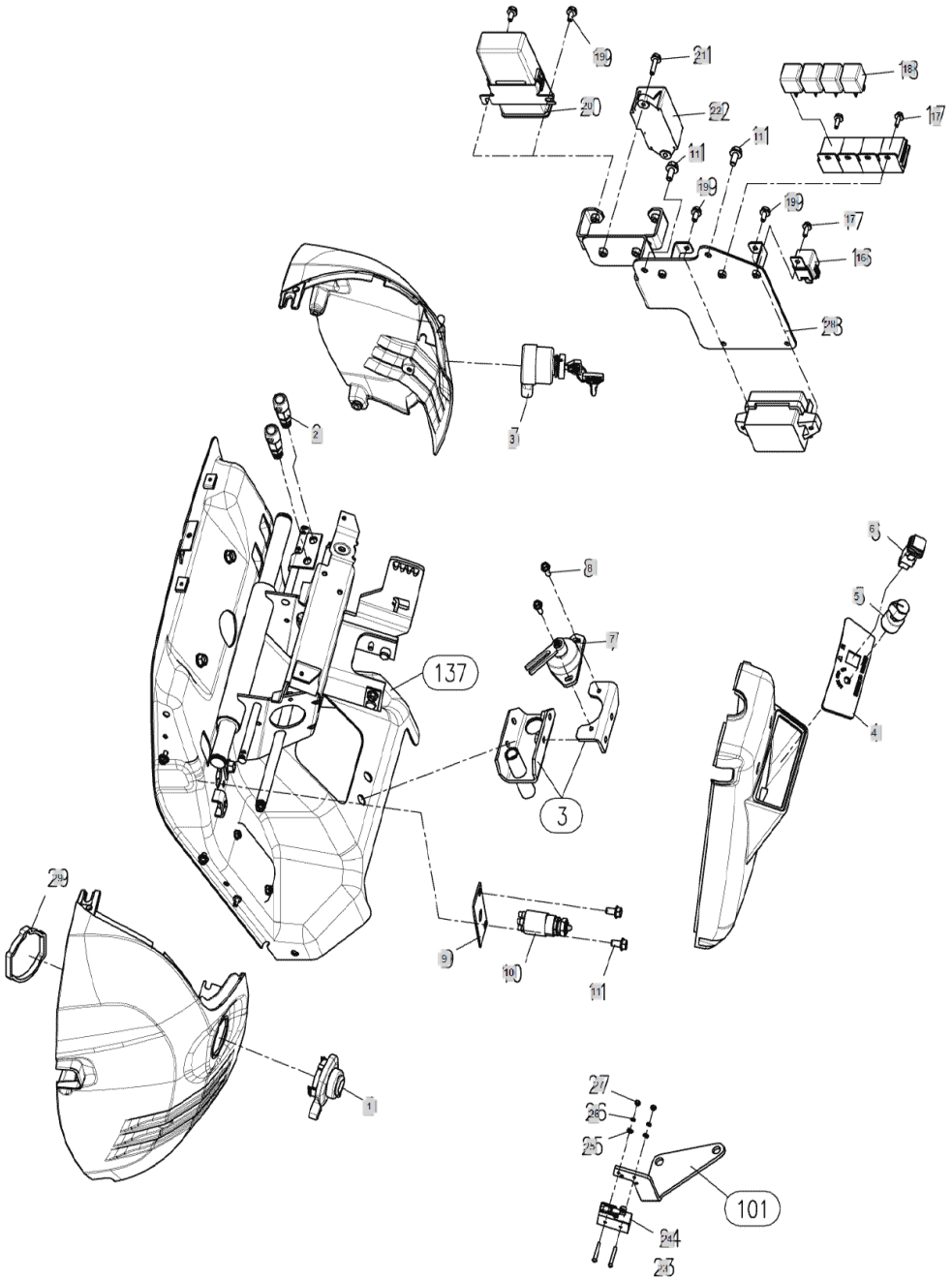

FIG S125 5220R	SWITCHES	Year/Month 2020/01

KeyNo.	Part Number	Part Name	Quantity	Other
1	HA00000067A	COMBINATION SWITCH	1	
2	TZC5110000A3	STOPLAMPSWITCH	2	
3	TTC5030000B3	STARTERSWITCHASS'Y	1	
4	TA00002731A	PANNEL, SWITCH	1	
5	HA00000467A	4WD S/W(NF)	1	
6	FTC5340000A3	EMERGENCY LAMP SWITCH	1	
7	TCD9110000B2	SWITCH ASS'Y	1	
8	26106-060162	HEXFLANGEBOLT	2	
9	TA00018456A	SWITCH PLATE	1	
10	HA00000361A	SWITCH,SAFETY	1	
11	26106-080162	SCREW,HEXFLANGEHEADCAP	4	
16	FTB9160000A3	GLOW RELAY (12V-70A)	1	
17	26106-050142	HEX FLANGE BOLT (5-14)	3	
18	FTC5130000A3	RELAY(5P)	4	
19	26106-060122	HEX BOLT (6-12)	4	
20	HRB1801002A2	Q.G.S CONTROLLER	1	
21	26106-060222	HEX FLANGE BOLT	2	
22	NTC5510000A3	FLASH RELAY	1	
23	26557-040452	+ SMALL BOLT	2	
24	FTC5110000A3	SWITCH, PTO CONNECT	2	
25	22137-040000	WASHER, PLAIN (Φ 04)	2	
26	22217-040000	WASHER, SPRING (Φ 04)	2	
27	26716-040002	HEXNUT	2	
28	TA00025658A	BRACKET ASS'Y	1	
29	TA00024270A	HOLDER, COMBINATION SWITCH	1	

FIG S131 5220R	HORN	Year/Month 2020/01

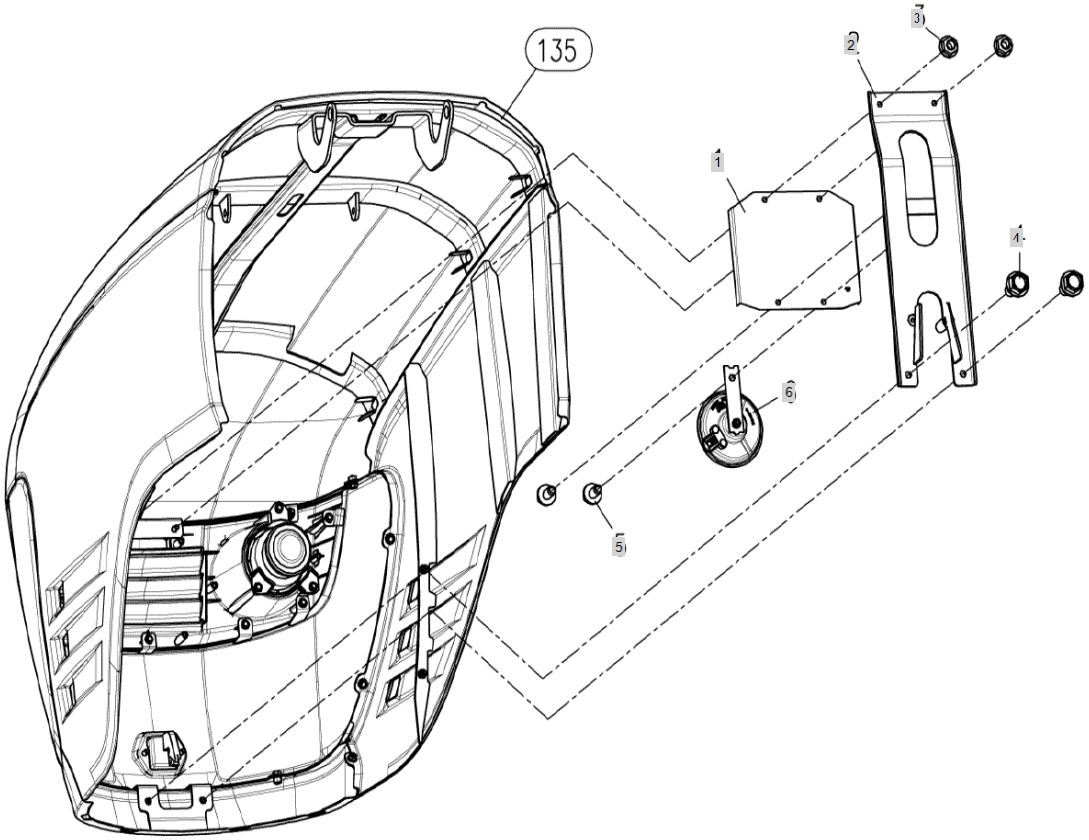

FIG S131 5220R	HORN	Year/Month 2020/01

KeyNo.	Part Number	Part Name	Quantity	Other
1	TA00023506A	WIRE MESH, FRONT	1	
2	TA00020282A	BRAKET ASSY	1	
3	26367-060002	Nut, Hexa (Φ6)	2	
4	26106-080162	SCREW,HEXFLANGEHEADCAP	2	
5	26107-060122	HEXA PLNGE BOLT	2	
6	TTD1040000B3	HORN	1	

FIG S132 5220R	LAMP	Year/Month 2020/01

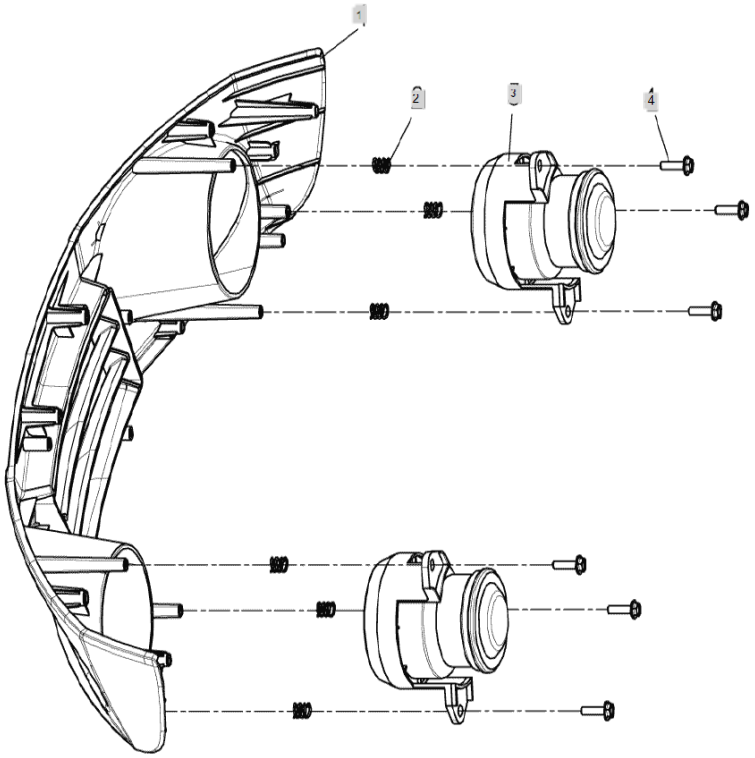

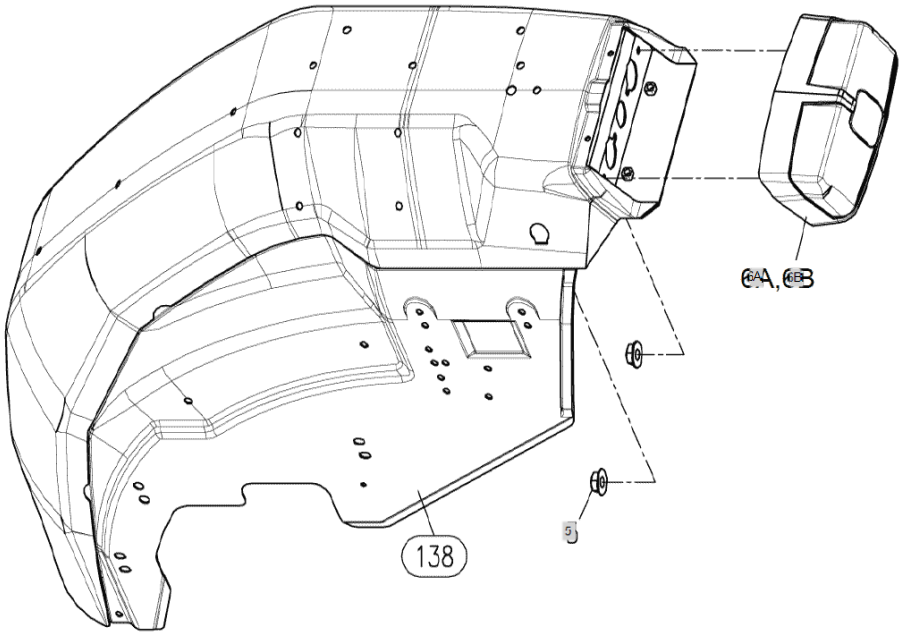

FIG S132 5220R	LAMP	Year/Month 2020/01

KeyNo.	Part Number	Part Name	Quantity	Other
1	TA00020279A	FRONT MASK	1	
2	TCE1080000A4	SPRING1.2	6	
3	TA00001207A	HEAD LAMP	2	
4	26476-050202	PLANGE HEXA TAPING BOLT	6	
5	26367-060002	Nut, Hexa (Φ6)	4	
6A	NTD2170000A3	COMBINATIONLAMP(R)	1	
6B	NTD2160000A3	COMBINATIONLAMP(L)	1	

FIG S134 5220R	METER ASS'Y	Year/Month 2020/01

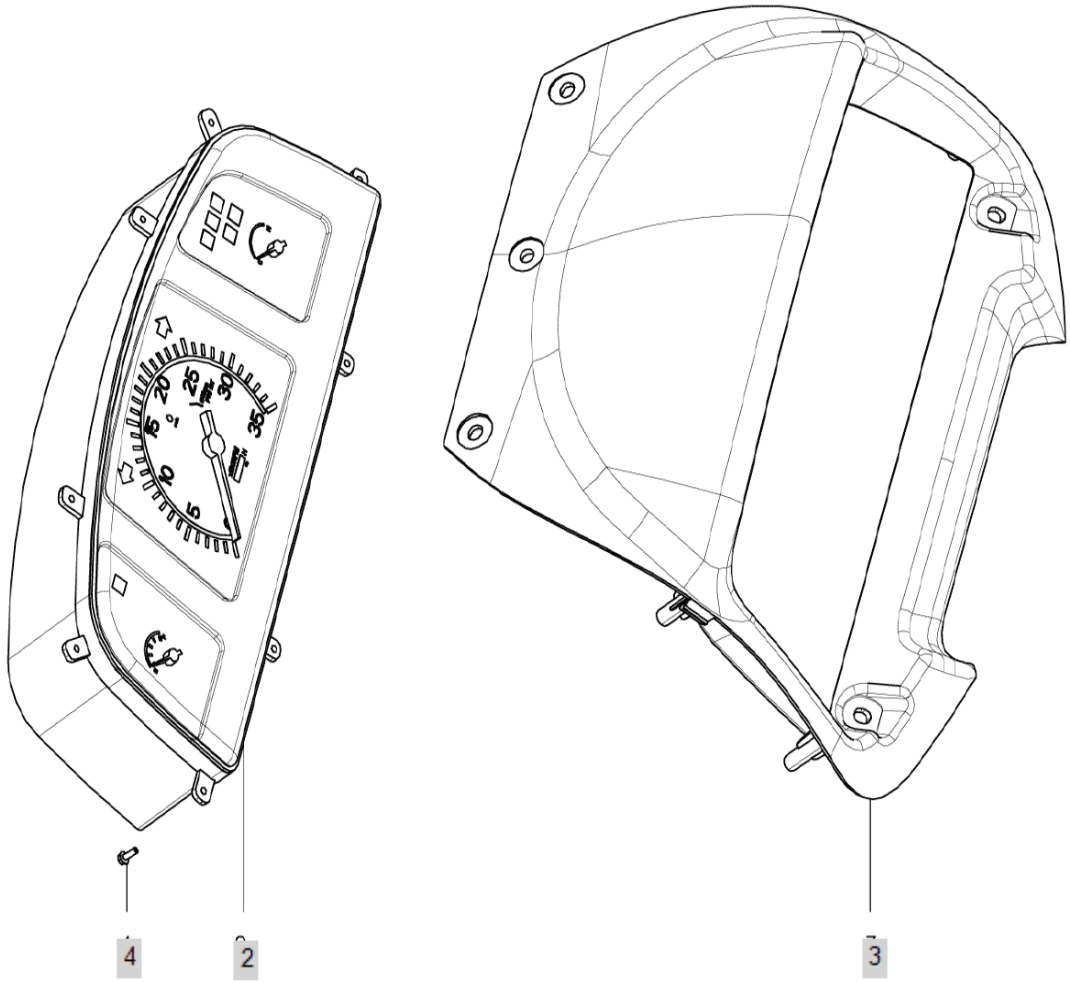

FIG S134 5220R	METER ASS'Y	Year/Month 2020/01

KeyNo.	Part Number	Part Name	Quantity	Other
2	HA00000620A	METER PANEL (20R)	1	
3	TA00021145A	DASH BOARD UPPER (L) -> TA00021145B	1	
4	22857-40080	SCREW,TAPPING	8	

FIG S135 5220R	HOOD	Year/Month 2020/01

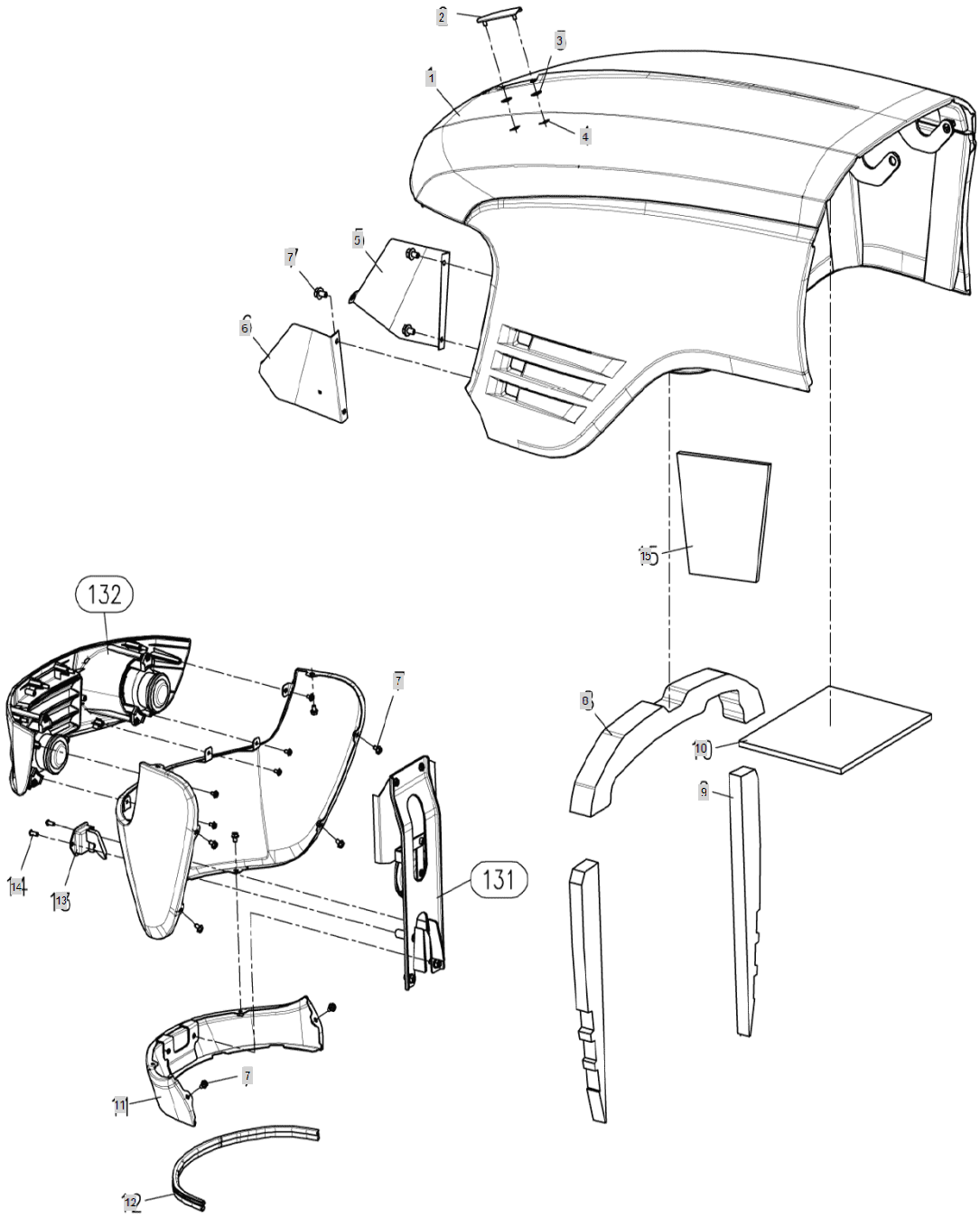

FIG S135 5220R	HOOD	Year/Month 2020/01

KeyNo.	Part Number	Part Name	Quantity	Other
1	TA00020289B	HOOD (20R/20C SERIES) -> TA00020289C	1	
2	TA00020285A	EMBLEM	1	
3	TTD6440000A4	CUSHION, RUBBER	2	
4	TB41290000A4	NUT	2	
5	TA00022983A	WIRE NET (RH)	1	
6	TA00022982A	WIRE NET (LH)	1	
7	26106-060102	Bolt, Hexa (6-10)	14	
8	TA00025656B	\	1	
9	TA00025657B	URETHAN SEAL, HOOD -> TA00025657C	2	
10	TA00020835A	HEAT INSULATOR, HOOD	1	
11	TA00020814A	HOOD_UN ASSY	1	
12	TA00023504A	WEATHER STRIP	1	
13	TA00016568B	DOOR LOCK ASSY	1	
14	TA00018918B	LENCHBOLT(M6)	2	
15	TA00020834A	HEAT INSULATOR, HOOD	1	

FIG S136. 5220R	HOOD SUPPORT	Year/Month 2020/01

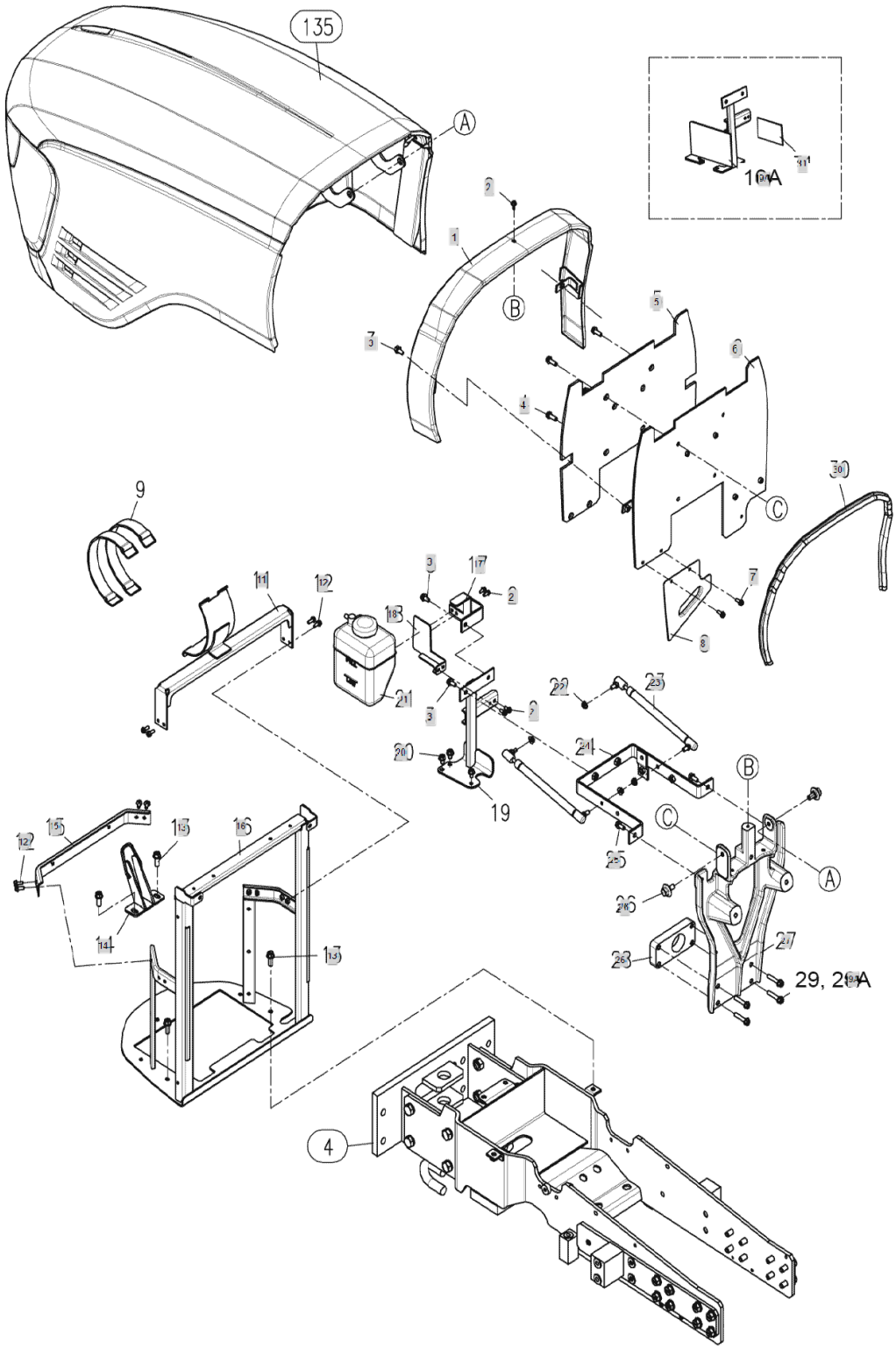

FIG S136. 5220R	HOOD SUPPORT	Year/Month 2020/01

KeyNo.	Part Number	Part Name	Quantity	Other
1	TA00024296A	EXTEMSION COVER ,ASSY	1	
2	26106-060142	BOLT	2	
3	26106-080162	SCREW,HEXFLANGEHEADCAP	4	
4	26106-080222	SCREW, HEX FLANGE HEAD CAP	4	
5	TA00023917A	SPONGE	1	
6	TA00023273A	PLATE ASSY	1	
7	26106-060162	HEXFLANGEBOLT	10	
8	TA00025502B	PLATE	1	
9	TZD6890000A4	BAND,AIRCLEANERHOLDING	2	
11	TA00025580A	BRACKET AIR-CLEANER ASS'Y	1	
12	26106-060122	HEX BOLT (6-12)	8	
13	26106-100202	HEX BOLT, (10-20)	4	
14	TA00022936A	HOOD LOCK	1	
15	TA00025584A	RECEIVER DRIVER BRACKET	1	
16	TA00025520B	FRAME ASS'Y GRILL	1	
17	TA00025331A	BRACKET	1	
18	TA00023210A	BRACKET	1	
19A	TA00022470A	BRAKET ASSY	1	
20	26106-080122	Bolt, Hexa (8-12)	2	
21	TA00023608B	RESERVOIR TANK, COOLING WATER	1	
22	26367-080002	HEX FLANGE NUT (Φ8)	4	
23	TA00023455A	GAS SPRING	2	
24	TA00025691A	BRACKET ASS'Y	1	
25	26106-080182	SCREW,HEXFLANGEHEADCAP	2	
26	TA00022981A	BONNET BOLT	2	
27	TA00025507B	BONNET BRACKET	1	
29A	26106-080202	SQR FLANGE BOLT	2	
30	TA00026771A	STRIP -> TA00033052A	1	
31	TA00027025A	SPONGE	1	

FIG S137 5220R	DASH BOARD	Year/Month 2020/01

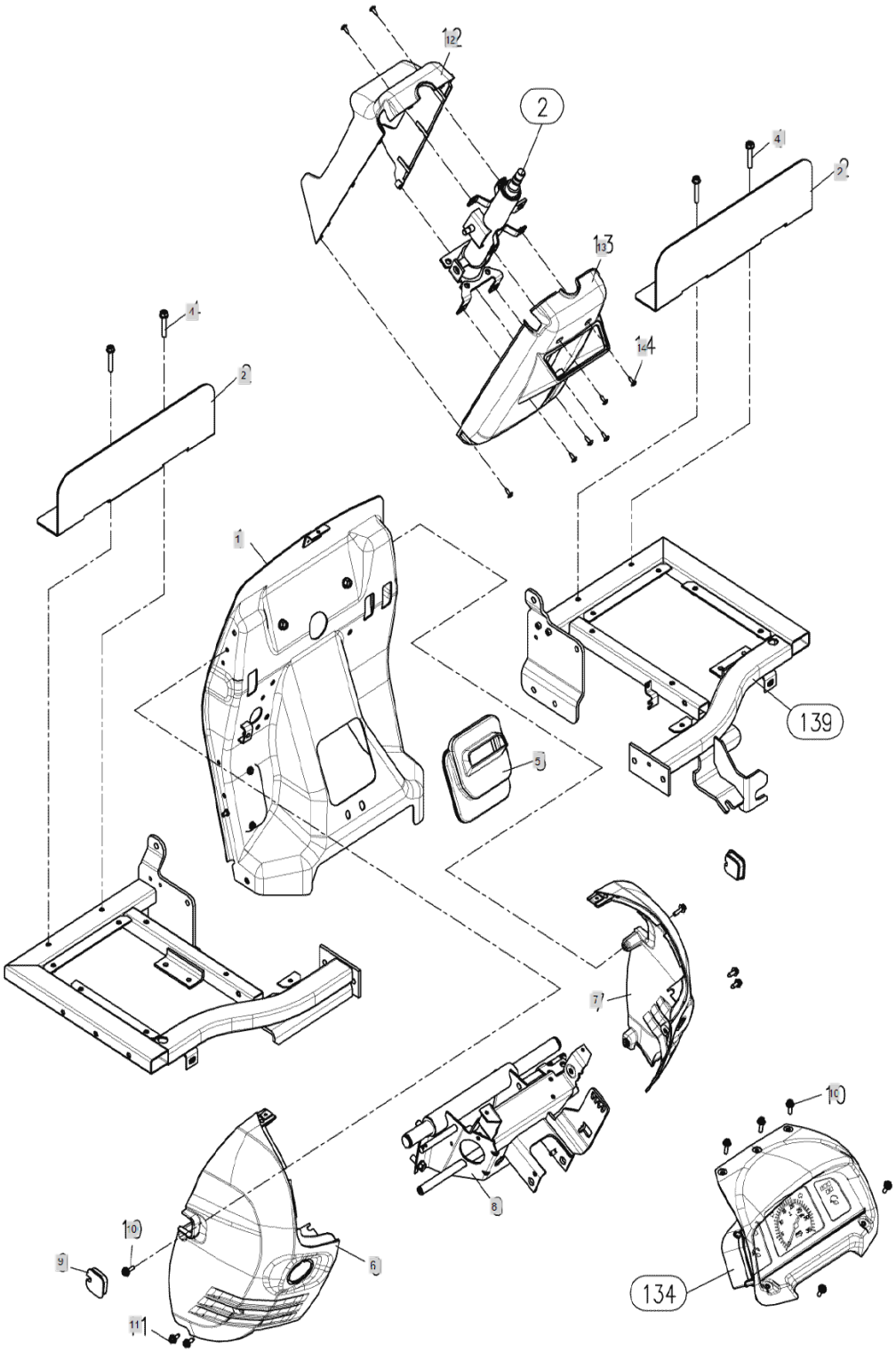

FIG S137 5220R	DASH BOARD	Year/Month 2020/01

KeyNo.	Part Number	Part Name	Quantity	Other
1	TA00027847A	ASS'Y PLATE	1	
2	TA00027898A	WINDSHIELD	1	
4	26106-080452	HEX FLANGE BOLT 8X45	4	
5	TA00002039A	PST BOOT	1	
6	TA00021143A	DASH BOARD L -> TA00032771A	1	
7	TA00021144A	DASH BOARD (R) -> TA00032772A	1	
8	TA00025460B	COLUMN STAY ASS'Y	1	
9	TCE9190000A4	COVER	2	
10	TCE9020000A4	BOLT(BC)	6	
11	TCE9010000A4	BOLT	4	
12	TA00023577A	COLUMN COVER(FRONT)	1	
13	TA00023578A	COLUMN COVER(REAR)	1	
14	TTD7090000A4	CROSSRECESSEDHEADTAPPINGSCREW	8	
16	26106-010202	HEX PLANGE BOLT	2	

FIG S138 5220R	FENDER	Year/Month 2020/01

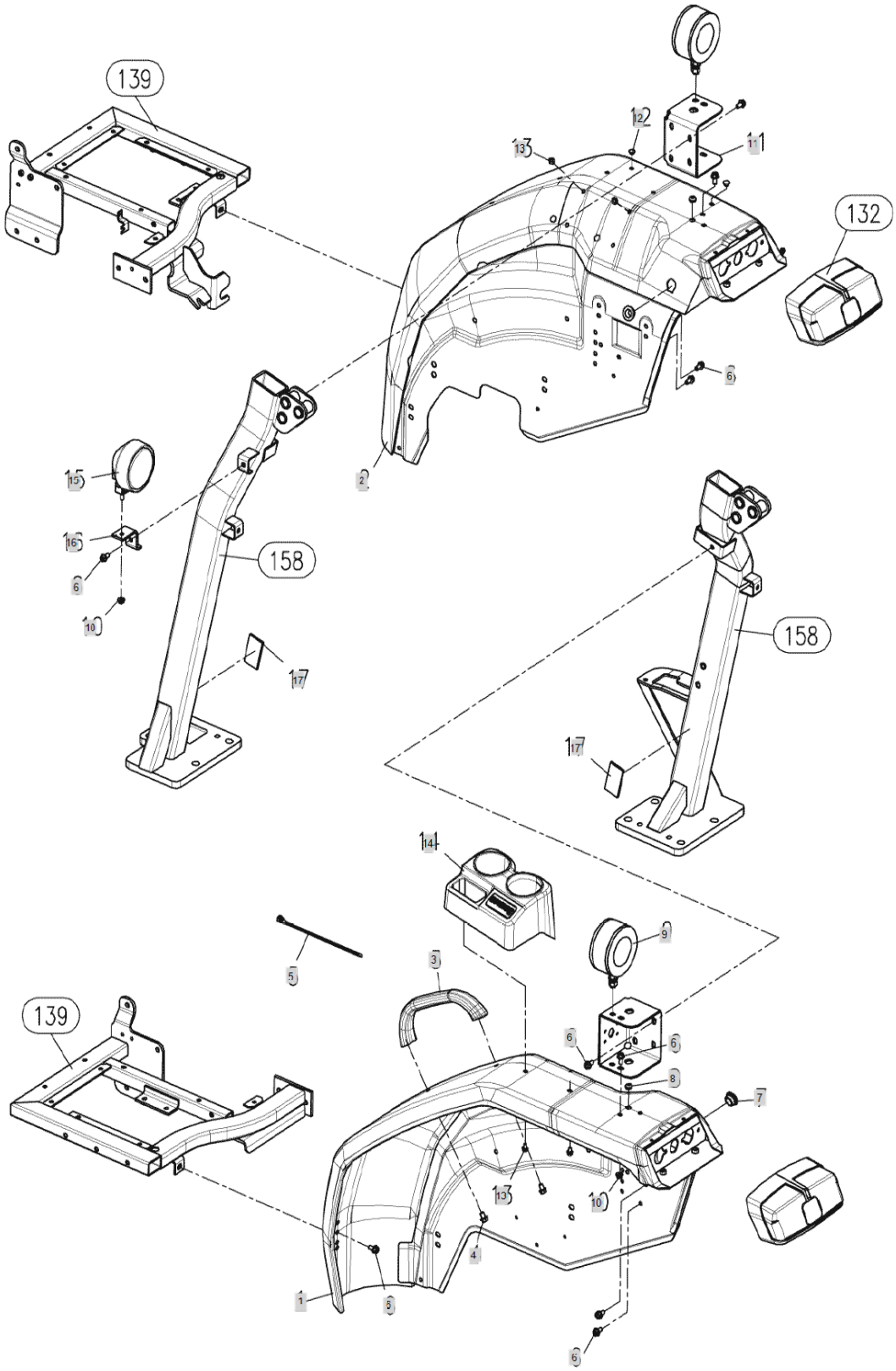

FIG S138 5220R	FENDER	Year/Month 2020/01

KeyNo.	Part Number	Part Name	Quantity	Other
1	TA00000670D	FENDER (LH) 20R SERIES -> TA00000670E	1	
2	TA00000675E	FENDER R ASS'Y	1	
3	NTD8120000A3	FENDERGRIP	1	
4	26106-080122	Bolt, Hexa (8-12)	2	
5	TTB9420000A4	Band, Wire (250mm)	4	
6	26106-080162	SCREW,HEXFLANGEHEADCAP	10	
7	TTB9280000A4	GROMMET25/18	2	
8	TB40280000A4	GROMET 8	2	
9	TZD2120000C3	DIRECTION LAMP	2	
10	26367-080002	HEX FLANGE NUT (Φ8)	2	
11	TA00002790B	FENDER SUPPORT(L,R) 20 -> TA00032150B	2	
12	TTD6650000A4	RUBBER	8	
13	26106-060102	Bolt, Hexa (6-10)	4	
14	TA00019128A	CUP HOLDER -> TA00019128B	2	
15	CEG6250000A2	Lamp Ass'y, Working	1	
16	NTD8400000A4	BRACKET	1	
17	FT06250000B4	TANK BRACKET PAD	2	

FIG S139 5220R	FOOT REST ASSY	Year/Month 2020/01

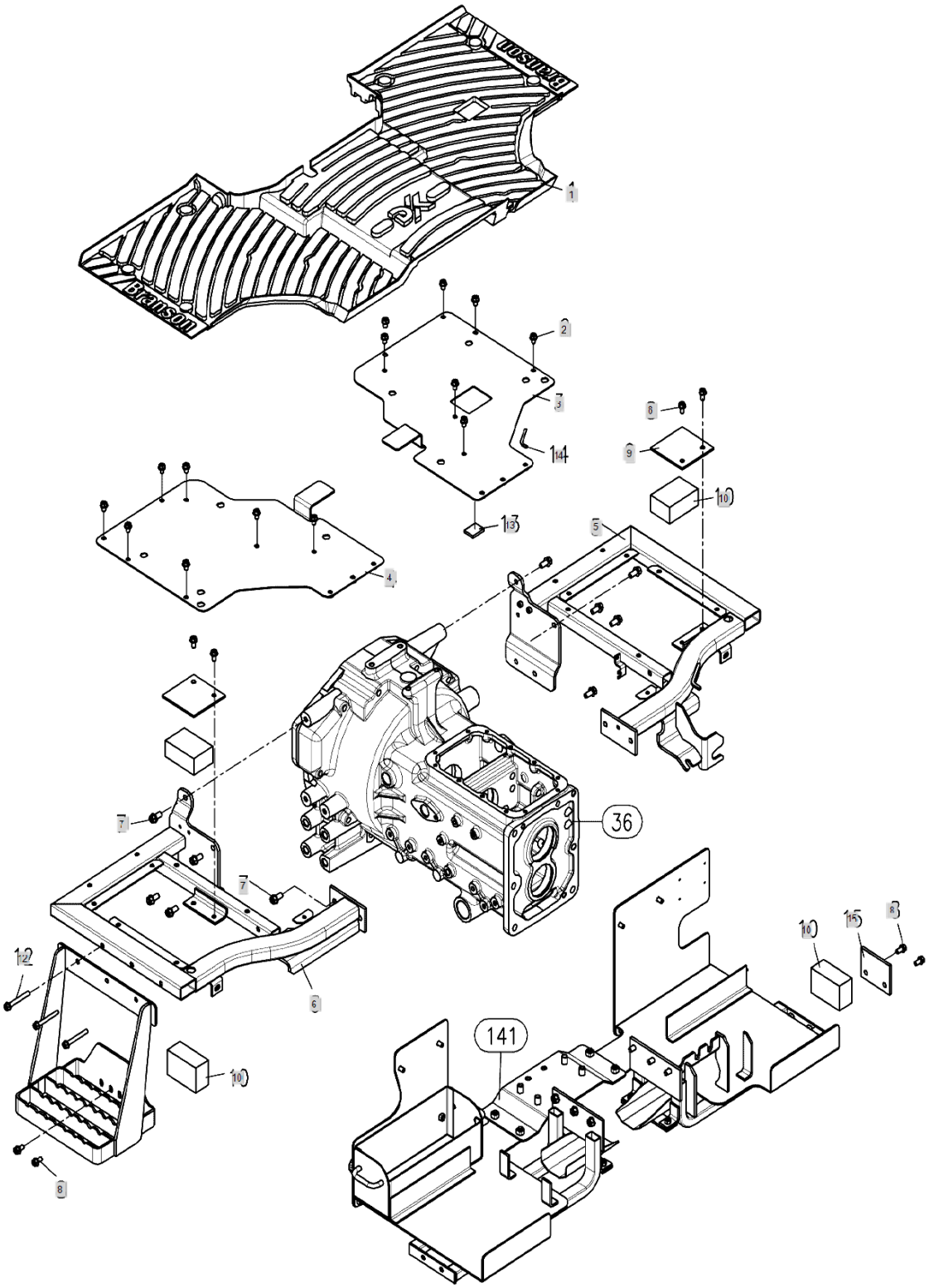

FIG S139 5220R	FOOT REST ASSY	Year/Month 2020/01

KeyNo.	Part Number	Part Name	Quantity	Other
1	TA00017814B	MAT FOOT REST	1	
2	26106-080122	Bolt, Hexa (8-12)	14	
3	TA00017135C	FOOT REST(R)	1	
4	TA00017133A	FOOT REST(L)	1	
5	TA00002771C	GUARD(R),FOOT REST	1	
6	TA00002770B	GUARD(L),FOOT REST	1	
7	26106-100202	HEX BOLT, (10-20)	10	
8	26106-080162	SCREW,HEXFLANGEHEADCAP	8	
9	NTD9420000A3	FUEL SETUP PLATE	2	
10	NTD9430000A4	FUELTANKURETHAN	4	
11	TA00001356B	SUPPORT FOOT REST -> TA00001356D	1	
12	26106-080652	SCREW,HEXFLANGEHEADCAP	3	
13	TA00018661A	PIPE	1	
14	TA00020513A	MOLD 100	1	
15	NTD9390000A4	SIDEHOLDER	1	

FIG S140 5220R	SEAT	Year/Month 2020/01

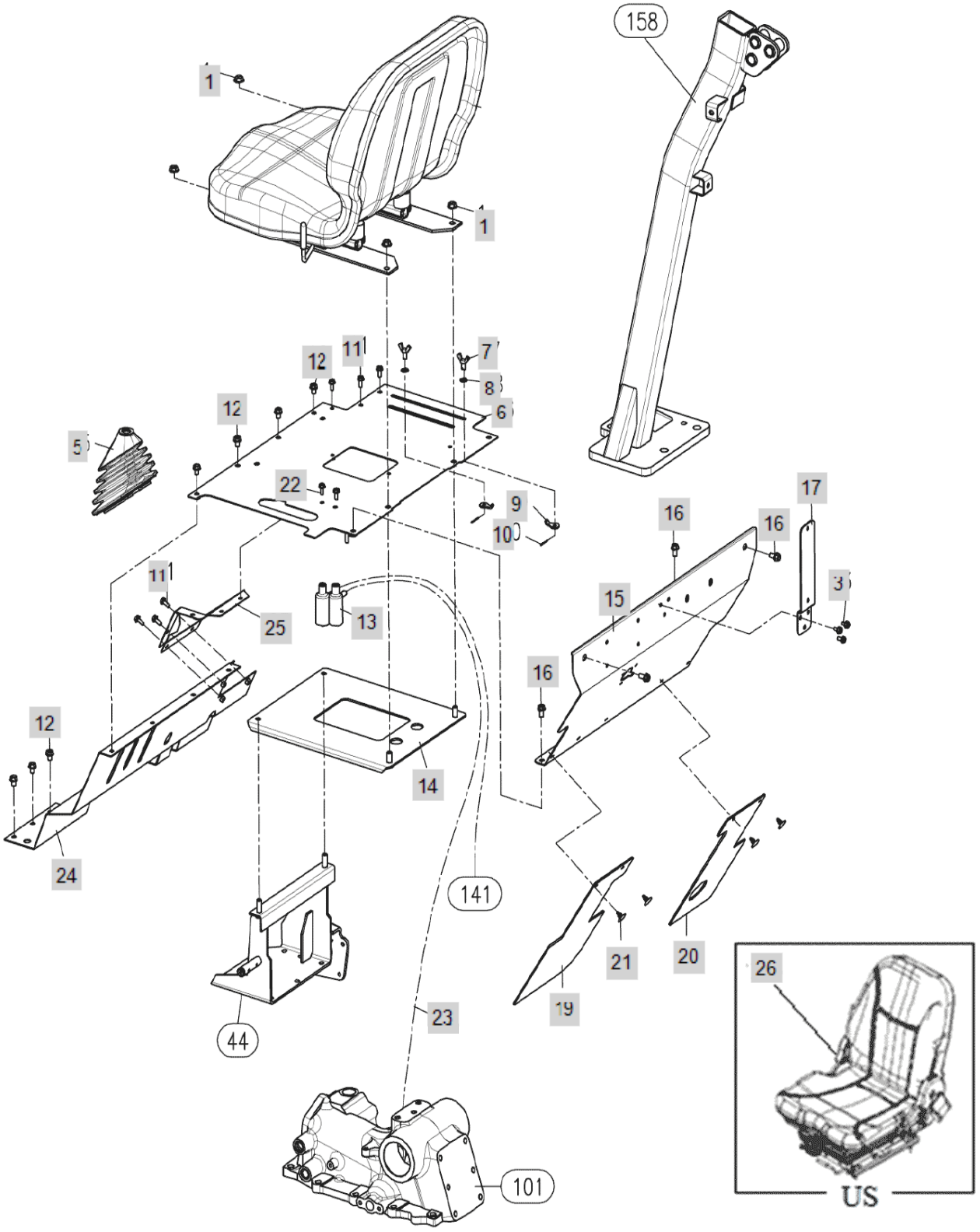

FIG S140 5220R	SEAT	Year/Month 2020/01

KeyNo.	Part Number	Part Name	Quantity	Other
1	26367-100002	NUT,HEXAGONFLANGE	4	
3	26106-060122	HEX BOLT (6-12)	3	
5	NTE0140000A2	BOOTS,MAINSHIFT	1	
6	TA00000742F	STAY, ASS'Y SEAT	1	
7	TTE0110000A4	BOLT, BUTTERFLY	2	
8	TTE0120000A9	WASHER	2	
9	TTE0080000A4	STOPPER	2	
10	22417-200200	PIN , COTTER (2-20)	2	
11	26106-060162	HEXFLANGEBOLT	6	
12	26106-080122	Bolt, Hexa (8-12)	12	
13	TB43640000A4	AIRBREEDERASS'Y	2	
14	TA00001524D	STAY, UPPER, SEAT ASS'Y	1	
15	TA00026018A	COVER ASS'Y REAR	1	
16	26106-080162	SCREW,HEXFLANGEHEADCAP	4	
17	TZE1040003B3	SMV BRACKET ASS'Y	1	
19	TA00018446A	RUBBER PLATE(LEFT)	1	
20	TA00018447A	RUBBER PLATE(RIGHT)	1	
21	TTE0400000A4	CAP	4	
22	26106-120302	HEXFLANGEBOLT	2	
23	TTE0310000A4	PIPE,AIRBREETHER	1	
24	TA00017993C	.	1	
25	TA00002820B	LEVER GUIDE,MAIN SHIFT	1	
26	BRANXH2T6-1020	BRANSON UPGRADE SEAT (10/20/20R/20C)	1	

FIG S141 5220R	FUEL TANK	Year/Month 2020/01

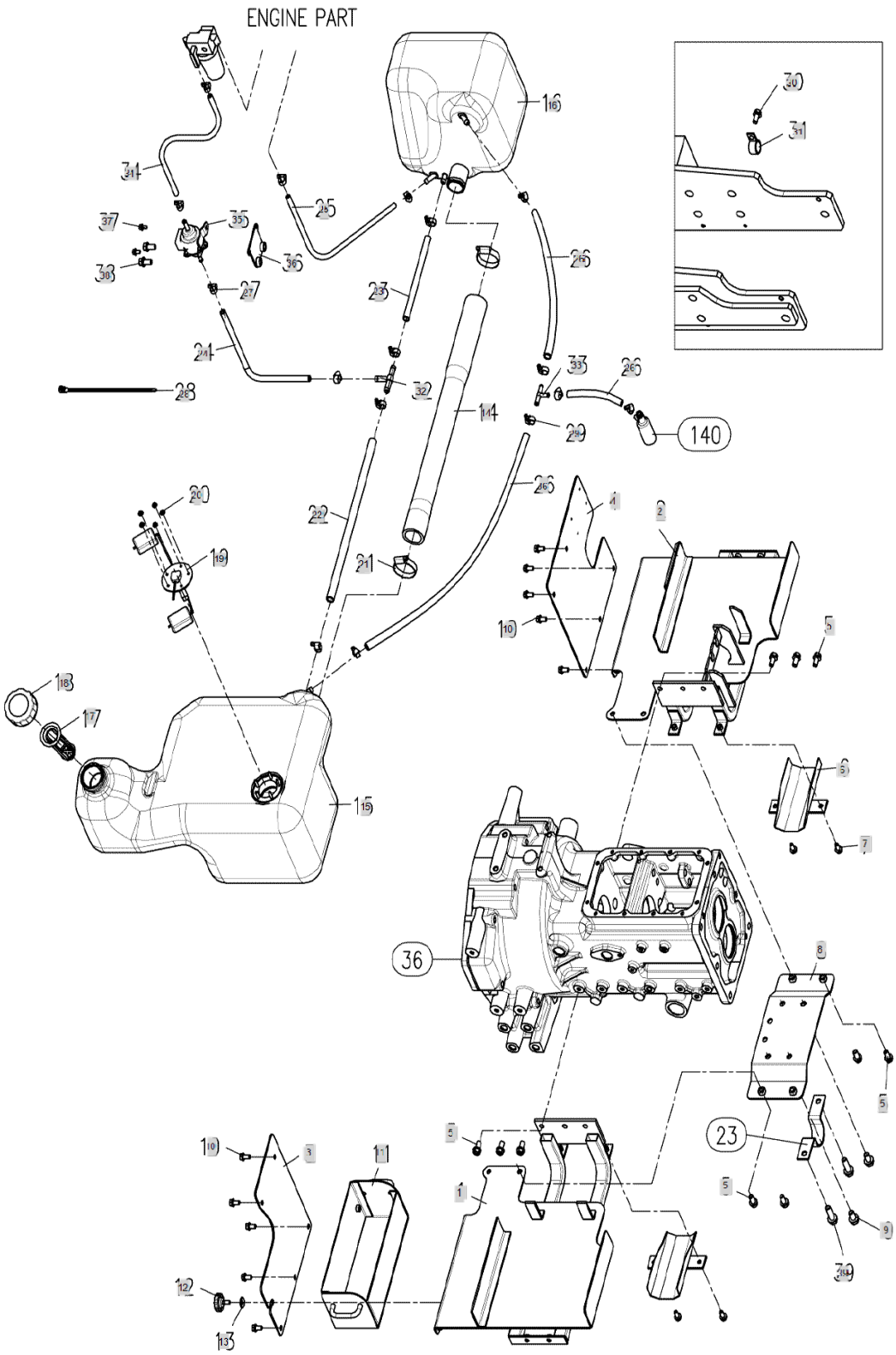

FIG S141 5220R	FUEL TANK	Year/Month 2020/01

KeyNo.	Part Number	Part Name	Quantity	Other
1	TA00002772A	SUPPORT(L),FUEL TANK	1	
2	TA00026061A	SUPPORT(R) FUEL TANK	1	
3	TA00001362B	COVER(L),FUEL TANK	1	
4	TA00026057B	COVER(R)	1	
5	26106-100202	HEX BOLT, (10-20)	10	
6	TA00003099A	BRACKET	2	
7	26106-080162	SCREW,HEXFLANGEHEADCAP	4	
8	TA00001294B	PLATE	1	
9	26106-120202	BOLT	2	
10	26106-080162	SCREW,HEXFLANGEHEADCAP	10	
11	TA00001993B	TOOL BOX R ASS'Y	1	
12	VD06310000C4	BOLT	2	
13	VD06410000D4	RUBBER WASHER	2	
14	TA00001986A	HOSE, FUEL TANK	1	
15	TA00001657A	FUEL TANK ASS'Y,(L)	1	
16	TA00026047A	FUEL TANK (R)	1	
17	TA00015743A	STRAINER, FUEL	1	
18	NTE1170000A3	CAP,FUELTANK	1	
19	TA00002016A	SENSOR, FUEL LEVEL	1	
20	26367-050002	HEX FLANGE NUT Φ5)	5	
21	23000-054000	HOSECLAMP54	2	
22	TA00015703A	HOSE A	1	
23	TA00015704A	HOSE B	1	
24	TA00018850A	FUEL HOSE 430	1	
25	TA00015706A	HOSE D	1	
26	23980-730600	FUEL HOSE	3	
27	23000-016000	Clip, Hose (Φ16)	10	
28	TTB9420000A4	Band, Wire (250mm)	1	
29	23000-013000	Clip, Hose (Φ13)	5	
30	26106-080122	Bolt, Hexa (8-12)	1	
31	CEH3050000A4	CLAMP50,WIRE	1	
32	FB05380000A3	T-JOINT	1	
33	TC51080000A4	T-JOINT	1	
34	TA00025687A	FUEL HOSE 195	1	
35	HF20190000A2	FUEL FEED PUMP	1	
36	TC51420000B4	STAY ASSY	1	
37	26106-060122	HEX BOLT (6-12)	2	
38	26106-100202	HEX BOLT, (10-20)	2	
39	26106-120252	HEX FLANGE BOLT	2	

FIG S144. 5220R	NAME PLATE	Year/Month 2020/01

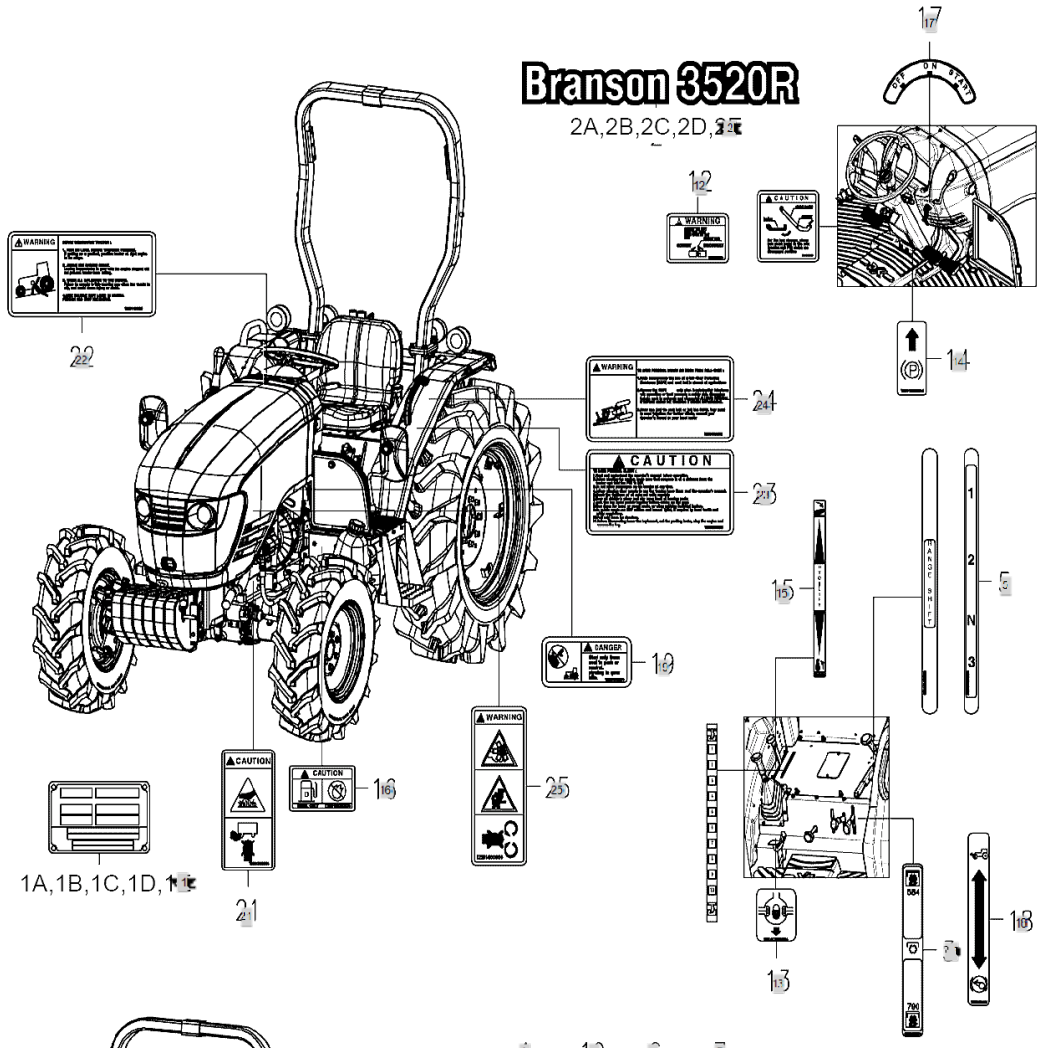

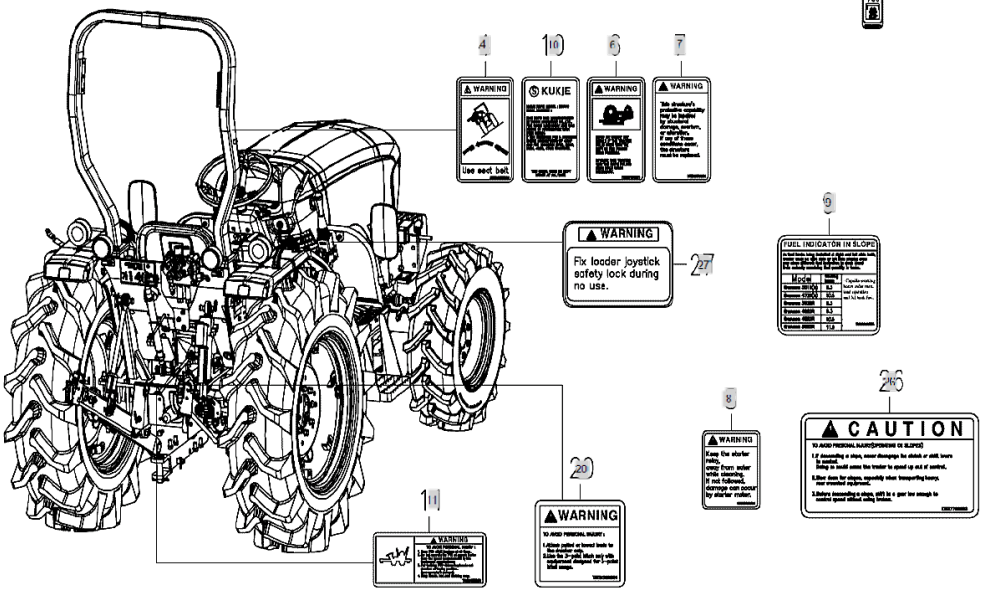

FIG S144. 5220R	NAME PLATE	Year/Month 2020/01

KeyNo.	Part Number	Part Name	Quantity	Other
? 1E	TA00026046B	NAME PLATE	2	
? 2E	TA00026042B	HOOD DECAL(5220R)	1	
? 3	NTE4260000B4	NAME PLATE, PTO 1-2	1	
4	NTE5150000C4	NAMEPLATE,SEATBELT	1	
5	NTE5200000B3	NAME PLATE, RANGE SHIFT	1	
6	NTE5210000C4	NAMEPLATE,SAFETY	1	
7	NTE5220000C4	NAMEPLATE,DANGER	1	
8	NTE5270000A4	NAME PLATE, WARNING(STARTER RELAY)	1	
9	TA00026053B	NAME PLATE CAUTION(FUEL)	1	
10	NTE5830000B4	NAME PLATE, ROPS	1	
11	TA00015596A	PTO WARNING PLATE	1	
12	TA00015723A	LABEL, BRAKE PEDAL	1	
13	TZE4130000B4	LABEL,DIFFERENTIAL	1	
14	TZE4150000A4	LABEL, PAKING BRAKE	1	
15	TZE4170000B4	LABEL,HYDLIFT	1	
16	TZE4190000C4	LABEL, FUEL CAUTION	1	
17	TZE4330000B4	MARK, MAIN SWITCH	1	
18	TZE5050000B4	LABEL,FRONTDRIVE	1	
19	TZE5110000B4	NAMEPLATE,STARTERWARNING	1	
20	TZE5120000B4	NAME PLATE, EQUIP	1	
21	TZE5130000C4	NAME PLATE, CAUTION	1	
22	TZE5140000B3	NAME PLATE, DOWN LOAD	1	
23	TZE5160000B3	NAME PLATE, SAFETY	1	
24	TZE5170000B3	NAME PLATE, ROPS CAUTION	1	
25	TZE5180000C4	NAME PLATE, REVOLUTION	1	
26	TZE5770000B3	MARK,WARNING	1	
27	TA00026342A	NAMEPLATE	1	

FIG S146 5220R	TOP LINK LIFT LINK	Year/Month 2020/01

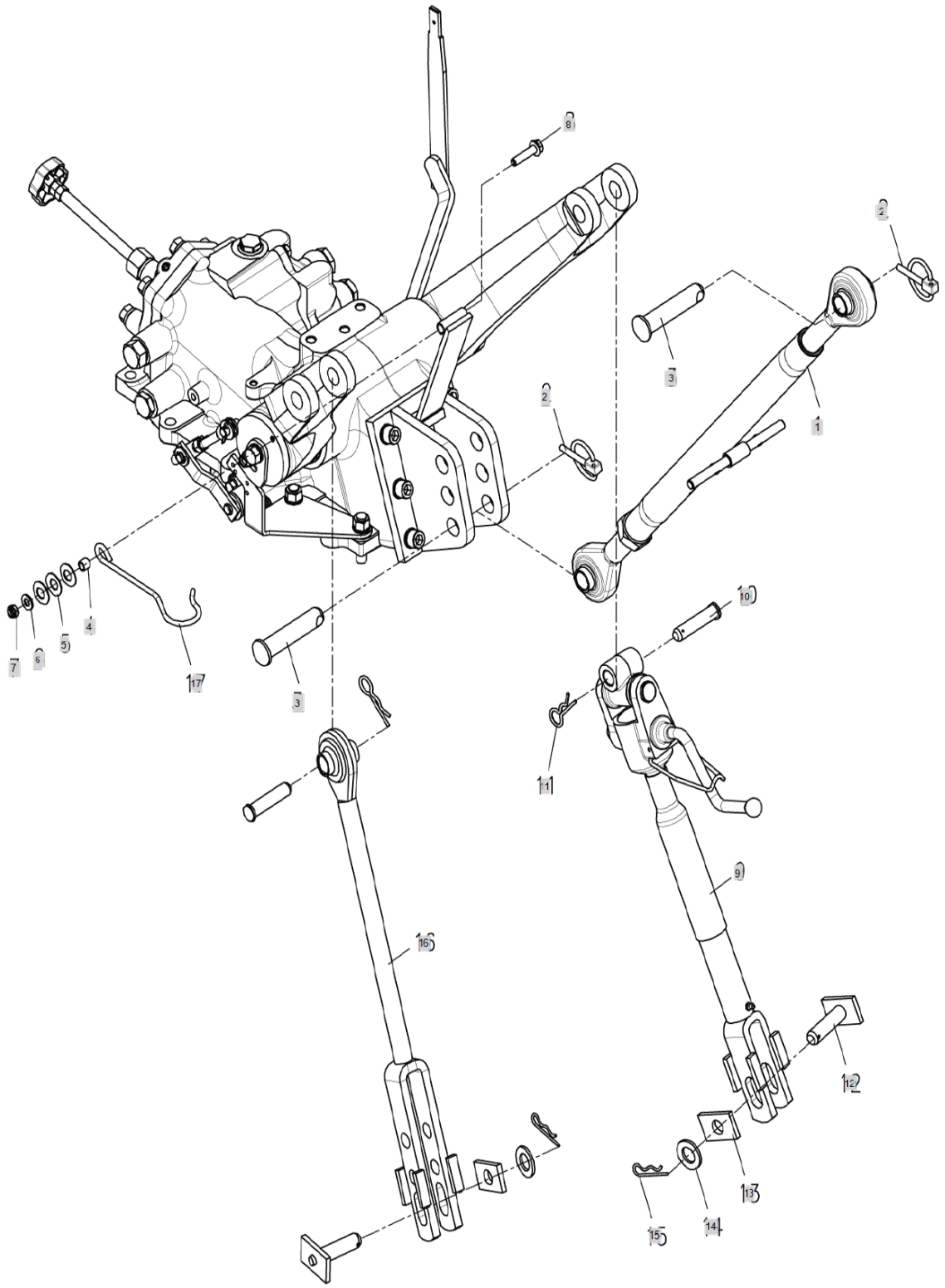

FIG S146 5220R	TOP LINK LIFT LINK	Year/Month 2020/01

KeyNo.	Part Number	Part Name	Quantity	Other
1	NTE60209INA3	TOP LINK ASSY -> TA00034892A	1	
2	NT300000INA4	RING PIN ASSY'	2	
3	TTE6130000A4	PIN	2	
4	TCG1160000A4	COLLAR	1	
5	TC94060000A4	PRING12	3	
6	22137-080000	WASHER, PLAIN (Φ 08)	1	
7	26347-080002	Unut	1	
8	26106-080352	SCREW,HEXFLANGEHEADCAP	1	
9	NTE70200INA3	ADJUSTABLE LIFT LINK ASSY (RH)	1	
10	TTE7290000B4	PIN	1	
11	TTE7010000A4	SNAPPIN	1	
12	TTE7300000A4	PIN	1	
13	TTE7310000A4	STOPPER	1	
14	22127-160000	WASHER, SPLAIN (Φ 16)	1	
15	22360-160000	PIN , SNAP (6Φ)	1	
16	NTE80400INA3	LIFT LINK ASSY (LH)	1	
17	NTE6150000A3	HANGER, TOP LINK	1	

FIG S150 5220R	LOWER LINK	Year/Month 2020/01

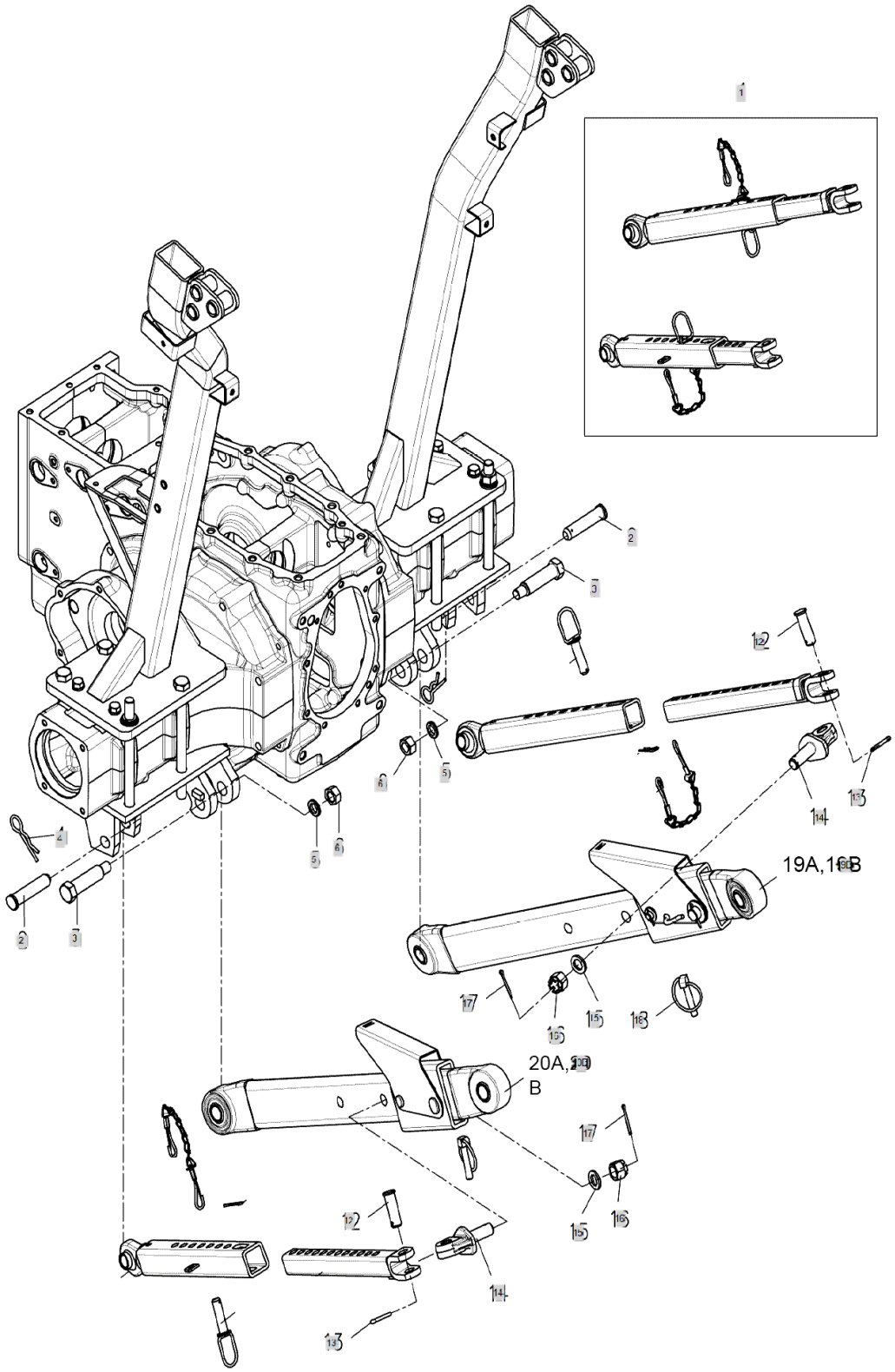

FIG S150 5220R	LOWER LINK	Year/Month 2020/01

KeyNo.	Part Number	Part Name	Quantity	Other
1	FBF0020000A2	CHECK BAR	2	
2	FTF0100000A4	FIXING PIN, CHECK CHAIN	2	
3	TB44360000A4	BOLT	2	
4	TTE7010000A4	SNAPPIN	2	
5	22217-160000	WASHER, SPRING (Φ 16)	2	
6	26736-160002	HEXNUT	2	
7	FBF0060000A4	CONNECT LINK	2	
8	22360-140000	PIN , SNAP (4Φ)	2	
9	FBF0050000A4	CONNECT PIN -> FBF0020000A2	2	
10	FBF0030000A3	CHECK BAR FRONT	2	
11	FBF0040000A3	CHECK BAR R	2	
12	FTF0090000A4	PIN, CHECK CHAIN	2	
13	22417-500320	PIN , COTTER (5-32)	2	
14	TA00016119A	EYE BOLT, LOWER LINK	2	
15	22137-180000	WASHER, PLAIN (Φ 18)	2	
16	26837-180002	CASTLE NUT-FINE THREAD	2	
17	22417-400360	PIN , COTTER (4-36)	2	
18	TB440300INA4	RING PIN ASSY'	2	
19B	NTF03400IND2	LOWER LINK ASSY (RH)	1	
20B	NTF03300IND2	LOWER LINK ASSY (LH)	1	

FIG S152 5220R	DRAWBAR HITCH	Year/Month 2020/01

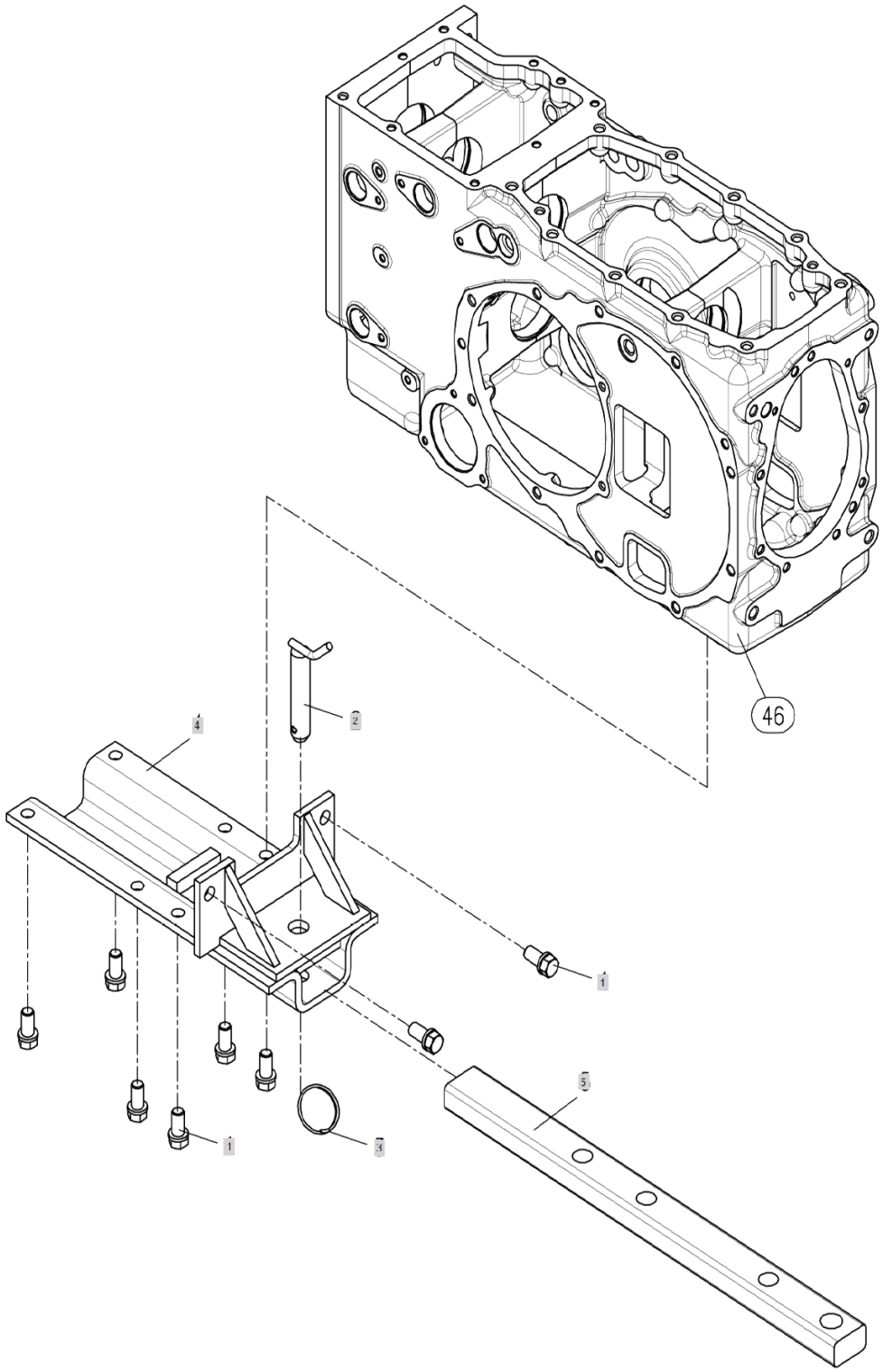

FIG S152 5220R	DRAWBAR HITCH	Year/Month 2020/01

KeyNo.	Part Number	Part Name	Quantity	Other
1	26013-140302	BOLT(+SW)	8	
2	TB46060000A4	HITCHPIN22	1	
3	TB46070000A4	RING	1	
4	TZF2050000A1	BRACKETDRAWBARHITCH	1	
5	NTF20100INA4	DRAW BAR	1	

FIG S158 5220R	SAFETY FRAME ASSY	Year/Month 2020/01

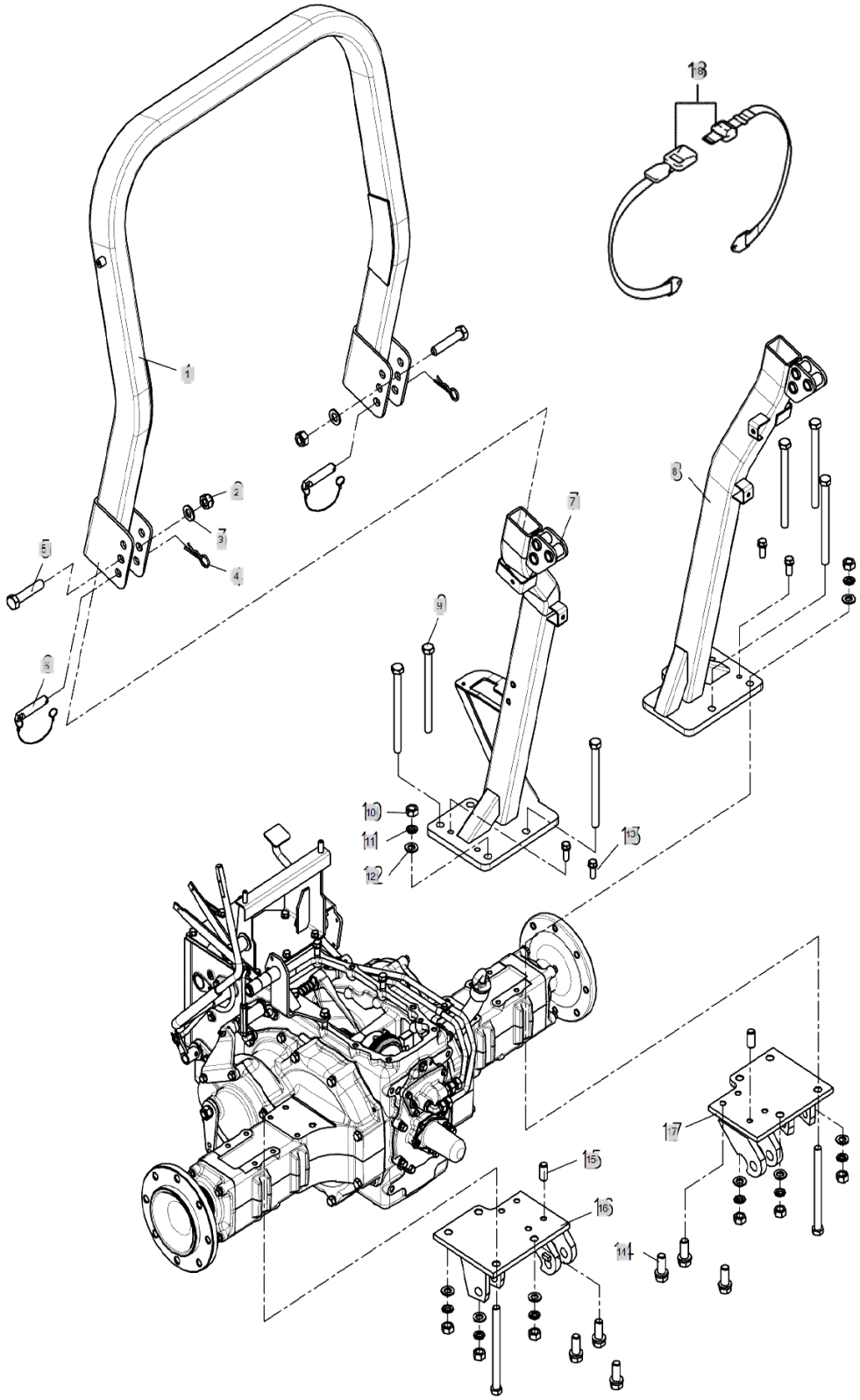

FIG S158 5220R	SAFETY FRAME ASSY	Year/Month 2020/01

KeyNo.	Part Number	Part Name	Quantity	Other
1	NTF835000EB0	ROPS ASSY	1	
2	26347-180002	NUT	2	
3	22137-180000	WASHER, PLAIN (Φ 18)	2	
4	TTE7010000A4	SNAPPIN	2	
5	26116-180902	BOLT	2	
6	NTF8400000A3	ROPSPIN	2	
7	TA00000938C	LOWER FRAME ASSY, LH	1	
8	TA00000939B	LOWER FRAME ASSY, RH	1	
9	TTF8170000A4	BOLT	8	
10	26716-160002	NUT	8	
11	22217-160000	WASHER, SPRING (Φ 16)	8	
12	22137-160000	WASHER, PLAIN (Φ 16)	8	
13	26013-120322	HEX BOLT W/WASHER	4	
14	26013-120302	HEX BOLT W/WASHER	6	
15	22312-120220	PIN, DOWEL (12-22)	2	
16	TA00000735B	LOWER LINK BRACKET, LH	1	
17	TA00000736B	LOWER LINK BRACKET, RH	1	
18	TTE0230000B3	SEAT SAFETY BELT	1	

FIG S160 5220R	FRONT WEIGHT	Year/Month 2020/01

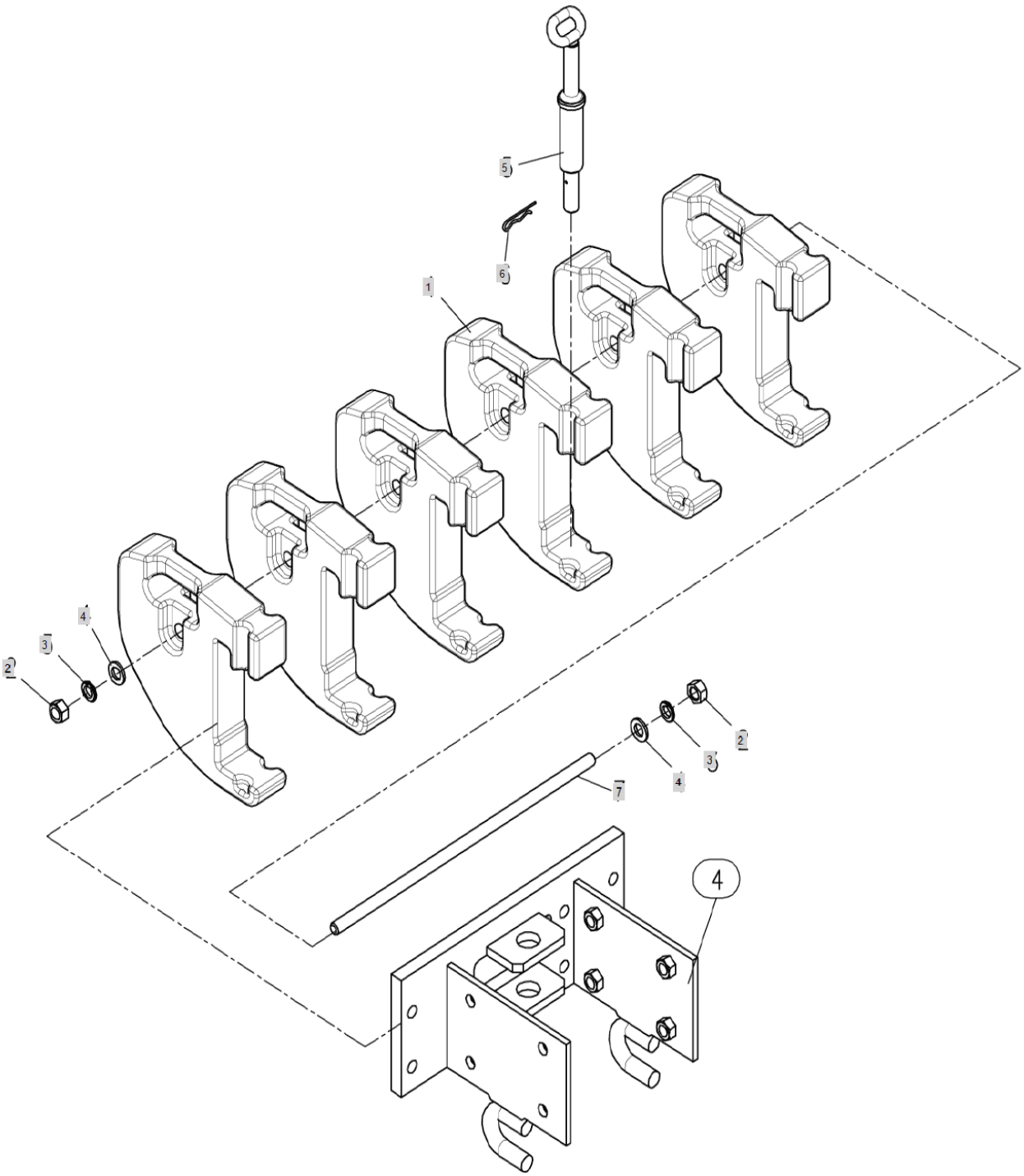

FIG S160 5220R	FRONT WEIGHT	Year/Month 2020/01

KeyNo.	Part Number	Part Name	Quantity	Other
1	TCK1010000A3	WEIGHT, FRONT	4	
2	26716-160002	NUT	2	
3	22217-160000	WASHER, SPRING (Φ 16)	2	
4	22137-160000	WASHER, PLAIN (Φ 16)	2	
5	TA00016799A	PIN, WEIGHT	1	
6	22360-200000	PIN , SNAP (20Φ)	1	
7	TA00016912A	FIX BAR, WEIGHT	1	

FIG S161. 5220R	ENGINE SUB	Year/Month 2020/01

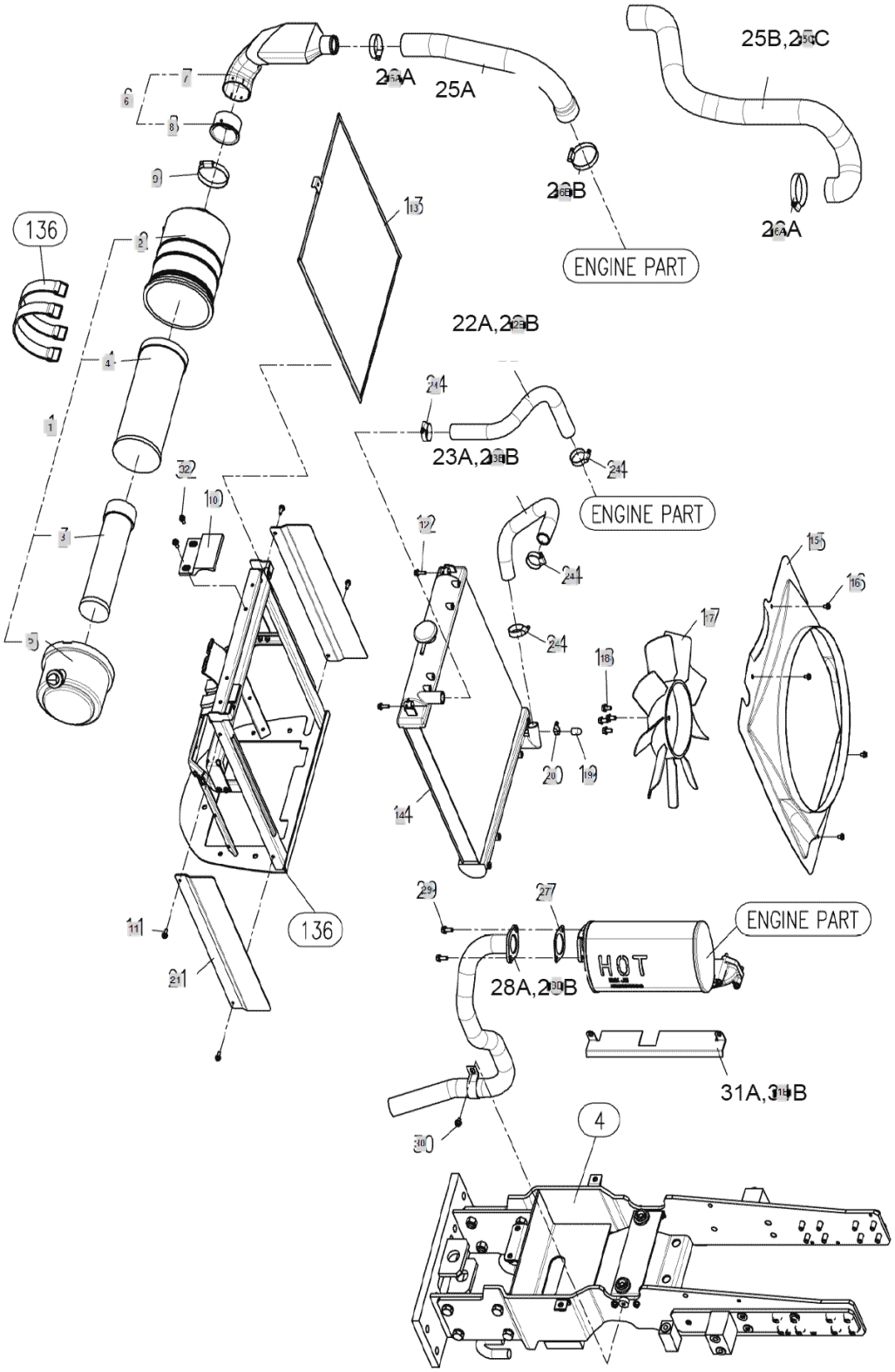

FIG S161. 5220R	ENGINE SUB	Year/Month 2020/01

KeyNo.	Part Number	Part Name	Quantity	Other
1	HLT0621000A2	AIRCLEANER A'SSY	1	
2	HLT0621010A9	BODY, AIRCLEANER	1	
3	HLT0621020A9	ELEMENT, AIR CLEANER (OUTER)	1	
4	HLT0621030A9	ELEMENT, AIR CLEANER (INNER)	1	
5	HLT0621040A9	COVER	1	
6	TA00025594A	INTAKE PIPE ASSY	1	
7	TA00025593A	PIPE	1	
8	TA00021622A	SEAL	1	
9	23000-080000	HOSECLAMP80	1	
10	TA00025591A	CUSHION RUBBER	1	
11	26106-060162	HEXFLANGEBOLT	4	
12	26014-060252	Bolt, Hexa (6-25)	2	
13	TA00024833B	NET	1	
14	EA00001873A	RADIATOR	1	
15	TA00025652A	SHROUD	1	
16	HRA1203200A4	TAPPINGSCREW	4	
17	HRC3000500A2	COOLING FAN (D405)	1	
18	26106-080162	SCREW,HEXFLANGEHEADCAP	4	
19	HRC1201200A4	CAP,COOLER	1	
20	23000-016000	Clip, Hose (Φ16)	1	
21	TA00025570A	RADIATOR BRACKET	2	
22B	HRE1203400A2	WATER HOSE A	1	
23B	TA00025609A	HOSE, COOLANT (B)	1	
24	23000-041000	HOSECLAMP	4	
25C	TA00025635A	INTAKE HOSE	1	
26A	23000-054000	HOSECLAMP54	1	
26B	23000-070000	CLAMP,HOSE	1	
27	HK0514000EA4	GASKET	1	
28B	TA00025623A	EXHAUST PIPE ASSY	1	
29	26106-080202	SQR FLANGE BOLT	2	
30	26106-080122	Bolt, Hexa (8-12)	1	
31B	TA00026821A	COVER	1	
32	26015-060162	BOLT	2	

FIG S190 5220R	MID REMOTE VALVE JOYSTICK	Year/Month 2020/01

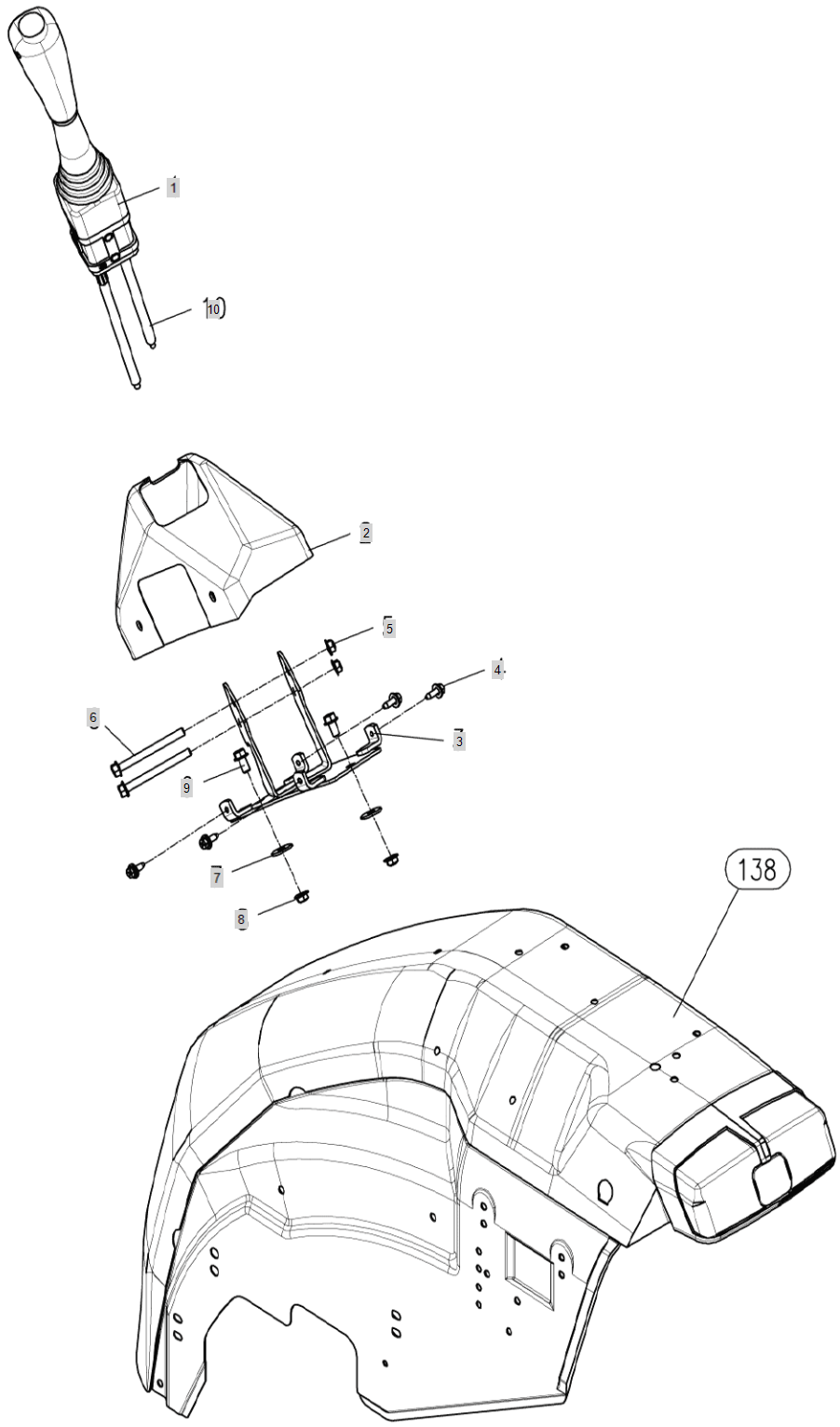

FIG S190 5220R	MID REMOTE VALVE JOYSTICK	Year/Month 2020/01

KeyNo.	Part Number	Part Name	Quantity	Other
1	TA00026742C	JOYSTIC ASSY	1	
2	TA00026232B	JOY-STICK COVE	1	
3	TA00026208A	JOY-STICK BRACKET ASS'Y	1	
4	TCE9010000A4	BOLT	4	
5	26367-080002	HEX FLANGE NUT (Φ8)	2	
6	26106-080852	SCREW,HEXFLANGEHEADCAP	2	
7	22157-080000	WASHER, PLAIN (Φ 08)	2	
8	26367-080002	HEX FLANGE NUT (Φ8)	2	
9	26106-080162	SCREW,HEXFLANGEHEADCAP	2	
10	TA00026742C	JOYSTIC ASSY	2	

FIG S191 5220R	FILTERS	Year/Month 2020/01

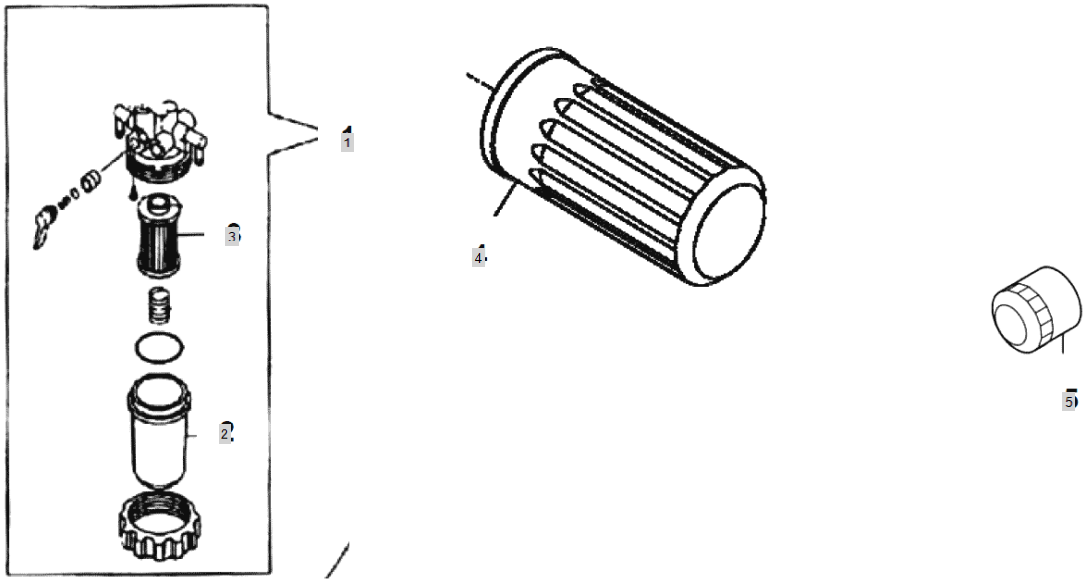

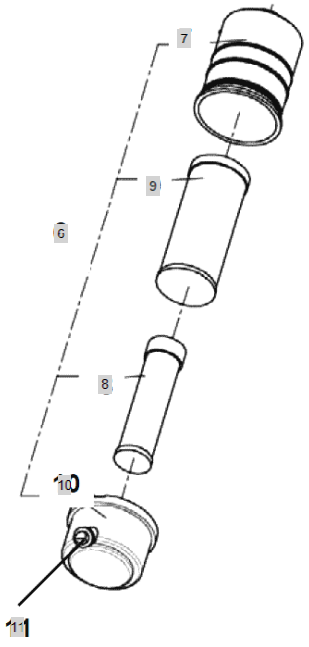

FIG S191 5220R	FILTERS	Year/Month 2020/01

KeyNo.	Part Number	Part Name	Quantity	Other
1	HK13010000C2	FUEL FILTER ASSY	1	
2	HA13050000B4	FILTER CUP	1	
3	HA13040000A4	ELEMENT, FUEL FILTER	1	
4	TA00025525A	FILTER, HYD OIL (20R/20C SERIES)	1	
5	HRA1102000A3	FILTER, ENGINE OIL	1	
6	HLT0621000A2	AIRCLEANER A'SSY	1	
7	HLT0621010A9	BODY, AIRCLEANER	1	
8	HLT0621030A9	ELEMENT, AIR CLEANER (INNER)	1	
9	HLT0621020A9	ELEMENT, AIR CLEANER (OUTER)	1	
10	HLT0621040A9	COVER	1	
11	HRA0500704A9	VACUATORVALVE	1	