KUKJE BRANSON 6530C Branson Tractor

Parts Catalogue

BRANSON TRACTOR

CONTENTS

GROUP NO	GROUP NAME	PAGE
000	AC65310	6
E001	CRANKSHAFT PULLEY	8
E002	AIR HEATER	10
E003	CYLINDER BLOCK	12
E004	CRANKSHAFT	14
E005	CAMSHAFT	16
E006	FRONT PTO	18
E007	ALTERNATOR	20
E008	FAN BELT PULLY	22
E009	TACH DRIVE COVER	24
E010	FUEL FILTER	26
E011	INJECTION PUMP AND MOUNTING	28
E012	INJECTION TUBES	30
E013	FUEL RETURN	32
E014	GEAR COVER	34
E015	IDLER GEAR	36
E016	WATER PUMP	38
E017	CYLINDER HEAD	40
E018	INTAKE MANIFOLD	42
E019	INJECTOR	44
E020	ENGINE BRACKET	46
E021	OIL GAUGE AND EXPANSION PLUGS	48
E022	OIL PUMP	50
E023	OIL FILLER PLATE	52
E024	OIL FILTER AND COOLER	54
E025	ROD AND PISTON	56
E026	ROCKER ARM	58
E027	SENSOR PLUMBING	60
E028	VALVE COVER	62
E029	EXHAUST MANIFOLD	64
E030	BALANCE ASSY	66
E031	TUBE SUCTION	68
E032	FRAME	70
E033	OIL PAN	72
E034	PLATE	74

GROUP NO	GROUP NAME	PAGE
S001	STAY, COLUMN	76
S002	PEDAL, ACCELERATION	78
S005-2	FUEL TANK (6530)	80
S006	BRACKET, FUEL TANK	82
S008	FRONT AXLE BRACKET	84
S009	FRONT SUPPORT	86
S012	RING GEAR	88
S013	POWER STEERING CYLINDER	90
S014	DIFFERENTIAL GEAR	92
S015	PROPELLER SHAFT	94
S016	FRONT WHEEL DIFFERENTIAL	96
S018	CASE, FRONT AXLE	98
S019	CASE, FRONT WHEEL GEAR	100
S021	FRONT SECOND SHAFT	102
S022	FRONT SPINDLE	104
S023	COVER, PROPELLER SHAFT	106
S024	TIRE, FRONT WHEEL	108
S029	STEERING COLUMN	110
S033	VALVE, STEERING	112
S034-2	PIPE, PS (6530)	114
S036	CLUTCH HOUSING	116
S038	CLUTCH ASS'Y	118
S039	CLUTCH SHAFT	120
S040	CLUTCH RELEASE	122
S041	PEDAL, CLUTCH	124
S043	LEVER. SHUTTLE (OLD VERSION)	126
S043-2	LEVER, SHUTTLE (CURRENT VERSION)	128
S044	TRANSMISSION CASE	130
S045	CENTER PLATE	132
S047	PTO PS PUMP	134
S048	PTO REGULATOR	136
S051	OIL STRAINER	139
S053	SHUTTLE, 3-4	141
S055	SHUTTLE, 1-2	143
S056	CREEP GEAR	145

GROUP NO	GROUP NAME	PAGE
S057	COUNTER SHAFT	147
S058	SUB CHANGE SHAFT	149
S060	PTO DRIVE SHAFT	151
S061	SHAFT, PTO CLUTCH	153
S062	PTO SHAFT	155
S063	PTO COUNTER SHAFT	157
S064	PTO BRAKE	159
S066	SHUTTLE, MAIN SHIFT	161
S067	LEVER, MAIN SHIFT	163
S069	LEVER, SUB SHIFT	165
S070	CREEP LEVER	167
S071	PTO SHIFT	169
S072	FRONT DRIVE	172
S075	SHIFTER, FRONT DRIVE	174
S078	RING GEAR & DIFF.GEAR&FINAL PINION	176
S079	DIFFERENTIAL CARRER	178
S080	CASE, REAR AXLE	180
S082	READ AXLE HOUSING	182
S083	DIFFERENTIAL	184
S084	FINAL GEAR	186
S085	REAR AXLE SHAFT	188
S094	BRAKE	190
S095	PEDAL, BRAKE	192
S096	VALVE, BRAKE	194
S097	PIPE, BRAKE	196
S098	PARKING BRAKE	198
S099	HYDRAULIC PUMP	200
S101	CASE, HYDRAULIC CYLINDER	202
S103	VALVE, REMOTE (CURRENT VERSION)	204
S103-2	VALVE, REMOTE (OLD VERSION)	207
S104	PISTON & LIFT LINK	210
S106	CONTROL VALVE	212
S108	RELIEF VALVE	214
S109	STOP VALVE	216
S110	SAFETY VALVE	218

GROUP NO	GROUP NAME	PAGE
S111	HYDRAULIC CONTROL (CURRENT VERSION)	220
S111-2	HYDRAULIC CONTROL (OLD VERSION)	223
S112	BACK-UP	226
S113	DRAFT CONTROL	228
S114-2	HYD PIPE (6530)	230
S114-3	HYD PIPE (6530-OLD VERSION)	232
S118	HYD FILTER	234
S119	WIRE HARNESS	236
S120	ELECTRIC COMPONENTS	238
S121-2	GUIDE, WIRE HARNESS (6530C,6530R)	240
S124	BATTERY	242
S125	SWITCH	244
S131	HORN	246
S132	LAMP	248
S134	METER ASSEMBLY	250
S136-2	HOOD (6530)	252
S137	DASH BOARD	255
S140	SEAT	257
S141	LEVER COVER	259
S144-1	NAME PLATE A	261
S144-2	NAME PLATE B	263
S144-3	NAME PLATE C	265
S146	TOP LINK	267
S147	LIFT LINK ASS'Y - L	269
S148	LIFT LINK ASS'Y-R	271
S150	LOWER LINK	273
S152-1	DRAWBAR HITCH (CURRENT VERSION)	275
S152-2	DRAWBAR HITCH (OLD VERSION)	277
S160	BALANCE WEIGHT	279
S201-1	FRAME, CAB	281
S202	DOOR, CAB	284
S203-1	ROOF, CAB	288
S204-1	WIRE HARNESS, CAB	290
S205-1	AIR CONDITIONER A	292
S205-2	AIR CONDITIONER B	294

GROUP NO	GROUP NAME	PAGE
S303	FLYWHEEL HOUSING	296
S306	Air Cleaner	298
S307-3	EXH. SILENCER(6530)	300
S309	FLY WHEEL (6530)	302
S312-3	COOLING WATER SYSTEM(6530)	304
S320	STARTING MOTOR (6530)	306
S325-2	COMPRESSOR(6530)	308

FIG 000 BRANSON 6530C	AC65310	Year/Month 2020/02

B CHASSIS

A ENGINE

FIG 000 BRANSON 6530C	AC65310	Year/Month 2020/02

KeyNo.	Part Number	Part Name	Quantity	Other
A	AC65310_A	ENGINE B3.3	0	
B	AC65310_B	6530C Tractor Parts (see also Engine B3.3)	0	

FIG E001 BRANSON 6530C	CRANKSHAFT PULLEY	Year/Month 2020/02

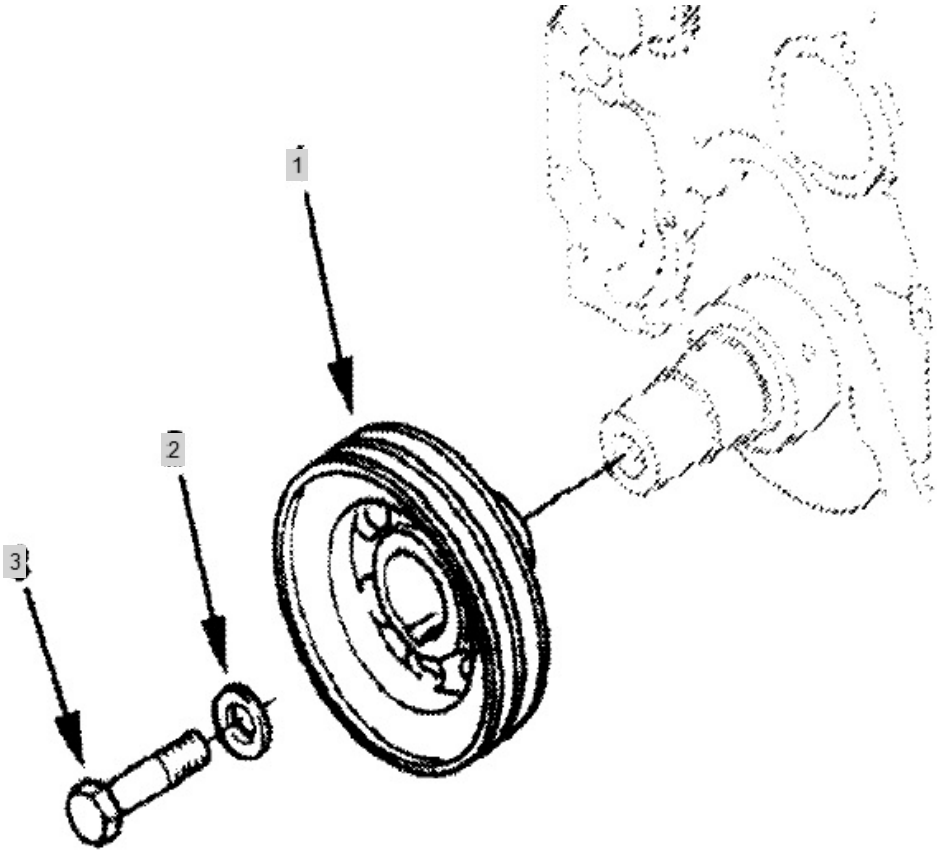

FIG E001 BRANSON 6530C	CRANKSHAFT PULLEY	Year/Month 2020/02

KeyNo.	Part Number	Part Name	Quantity	Other
1	C6204331420	PULLEY, CRANK SHAFT	1	
2	C6204311510	PLAIN WASHER	1	
3	C0105081435	SCREW	1	

FIG E002 BRANSON 6530C	AIR HEATER	Year/Month 2020/02

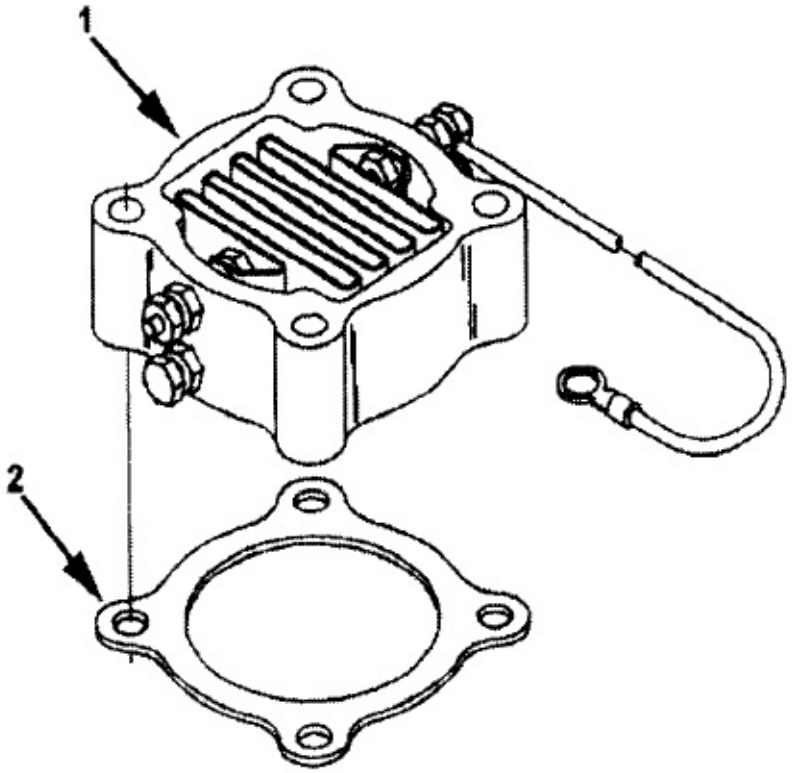

FIG E002 BRANSON 6530C	AIR HEATER	Year/Month 2020/02

KeyNo.	Part Number	Part Name	Quantity	Other
1	499382700	Air Heater Engine	1	
2	C6204114850	GASKET, CONNECTION	1	

FIG E003 BRANSON 6530C	CYLINDER BLOCK	Year/Month 2020/02

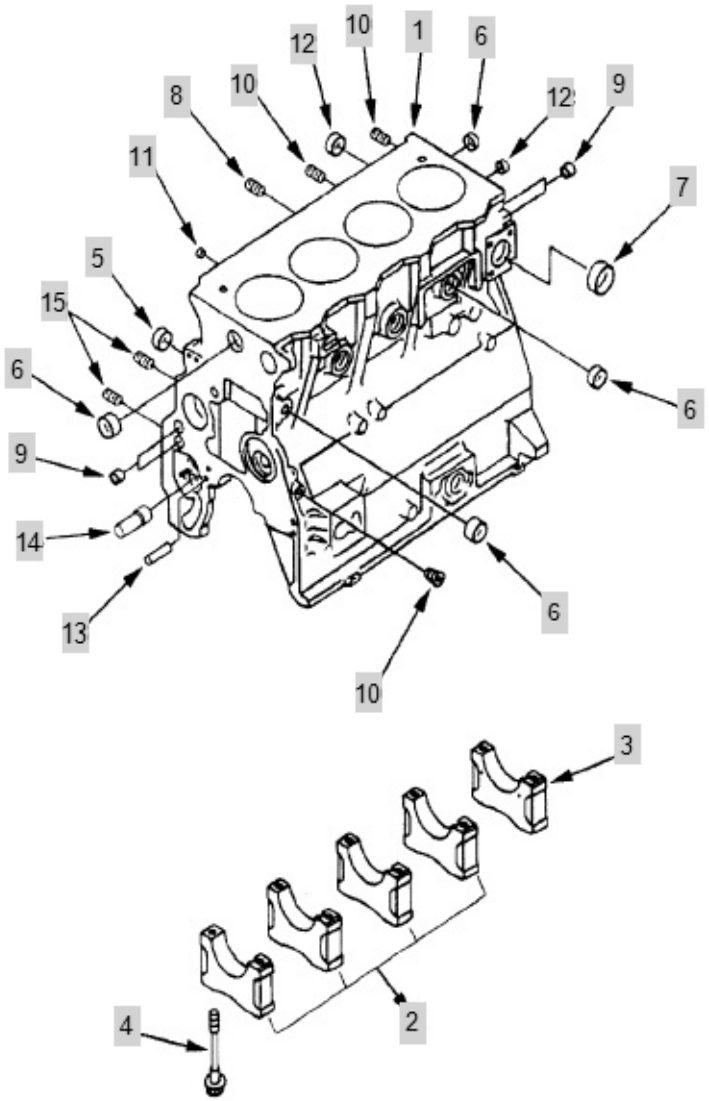

FIG E003 BRANSON 6530C	CYLINDER BLOCK	Year/Month 2020/02

KeyNo.	Part Number	Part Name	Quantity	Other
1	C6204211504	Block Cylinder	1	
2	C6204291210	MAIN BEARING CAP	4	
3	C6204291220	MAIN BEARING CAP	1	
4	C6204211610	Main Cap Bolts	10	
5	3094064	EXPANSING PLUG	5	
6	C0704643016	Expansing Plug	7	
7	3094028	Expansing Plug	1	
8	C0704270312	PIPE PLUG	1	
9	3093782	Expansing Plug	4	
10	C0704270108	PLUG PIPE	4	
11	C0704641410	EXPANSING PLUG	1	
12	C0704642216	EXPANSING PLUG	2	
13	C6136521620	DOWEL PIN	1	
14	C6204511620	LUBE OIL PUMP SHAFT	1	
15	3098827	PLUG PIPE	3	

FIG E004 BRANSON 6530C	CRANKSHAFT	Year/Month 2020/02

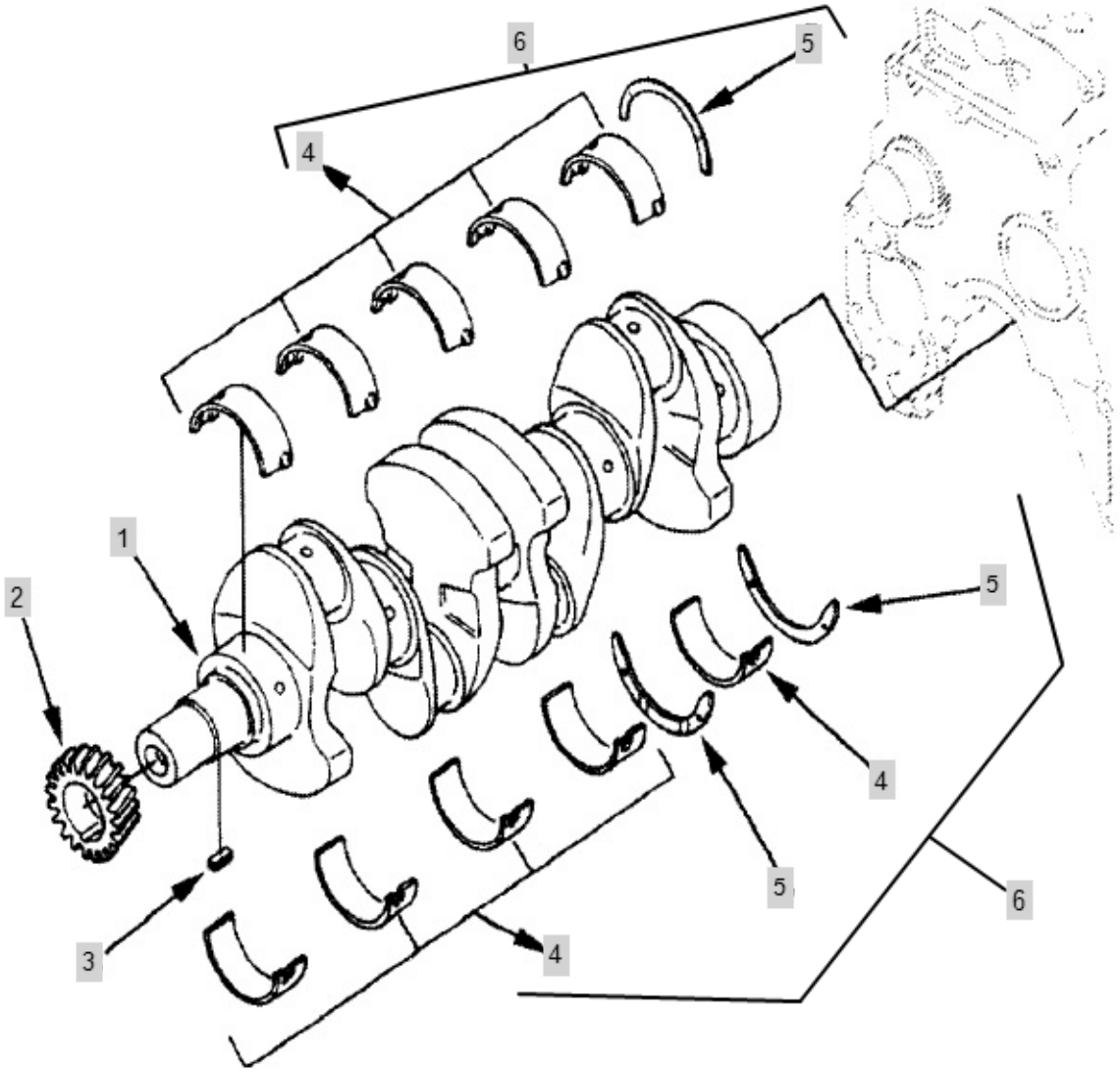

FIG E004 BRANSON 6530C	CRANKSHAFT	Year/Month 2020/02

KeyNo.	Part Number	Part Name	Quantity	Other
1	C6205311200	SUB TO-> C6204311201	1	
2	C6204311220	CRANKSHAFT GEAR	1	
3	C6206311530	KEY	1	
4	C6204218100	MAIN BEARING	10	
5	C6204218500	THRUST BEARING	3	
6	3800872	BEARING, MAIN(STD)	1	

FIG E005 BRANSON 6530C	CAMSHAFT	Year/Month 2020/02

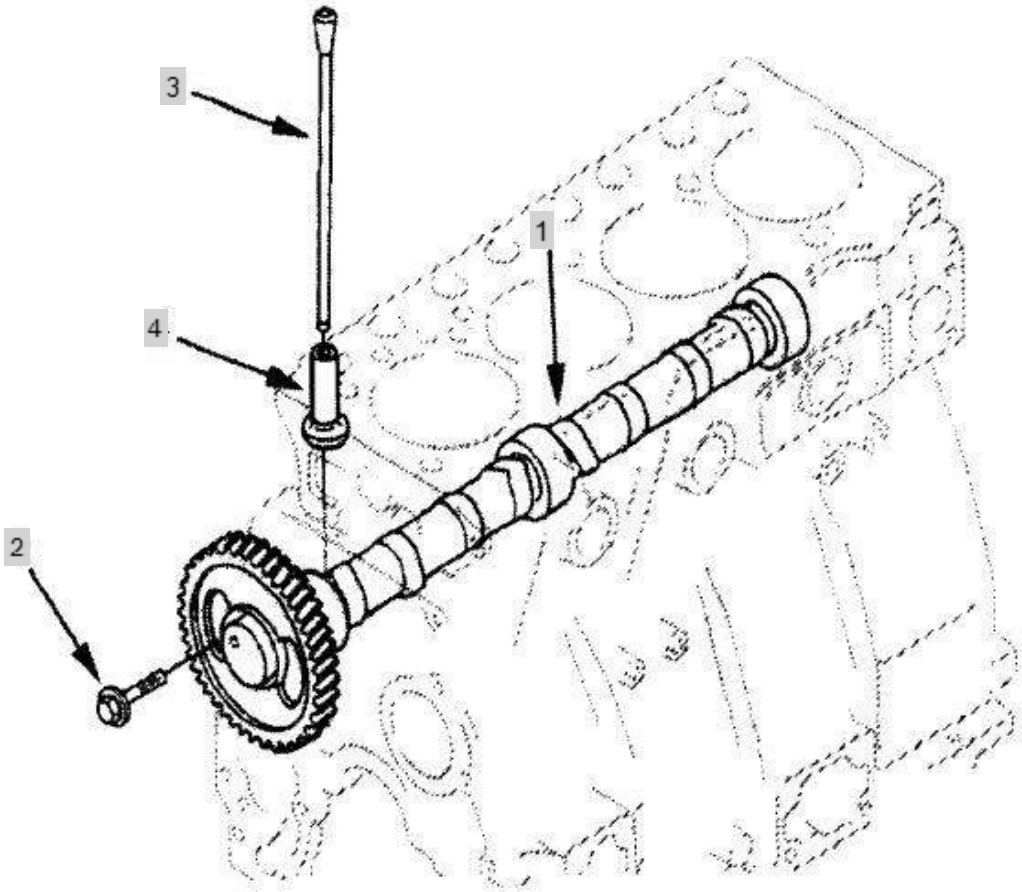

FIG E005 BRANSON 6530C	CAMSHAFT	Year/Month 2020/02

KeyNo.	Part Number	Part Name	Quantity	Other
1	C6205411300	CAM SHAFT	1	
2	C0143520820	SCREW	2	
3	C6204412110	TAPPET, VALVE	8	
4	C6204413110	ROD, PUSH	8	

FIG E006 BRANSON 6530C	FRONT PTO	Year/Month 2020/02

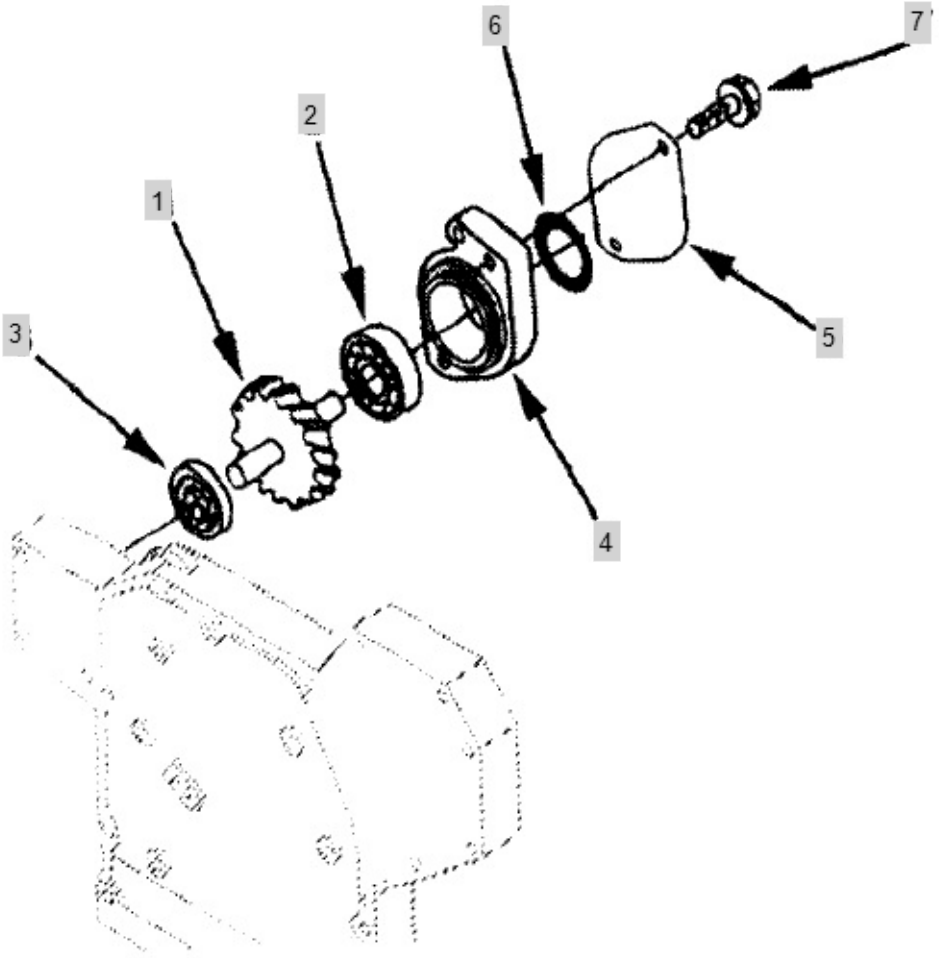

FIG E006 BRANSON 6530C	FRONT PTO	Year/Month 2020/02

KeyNo.	Part Number	Part Name	Quantity	Other
1	C6204219700	SHAFT, ACCESSORY DRIV	1	
2	C0604006207	BALL BEARING	1	
3	C6130229160	BALLBEARING	1	
4	C6204219160	PTO HOUSING	1	
5	C6144219811	COVER PLATE	1	
6	C0700002085	O-RING SEAL	1	
7	C0143501020	SCREW	2	

FIG E007 BRANSON 6530C	ALTERNATOR	Year/Month 2020/02

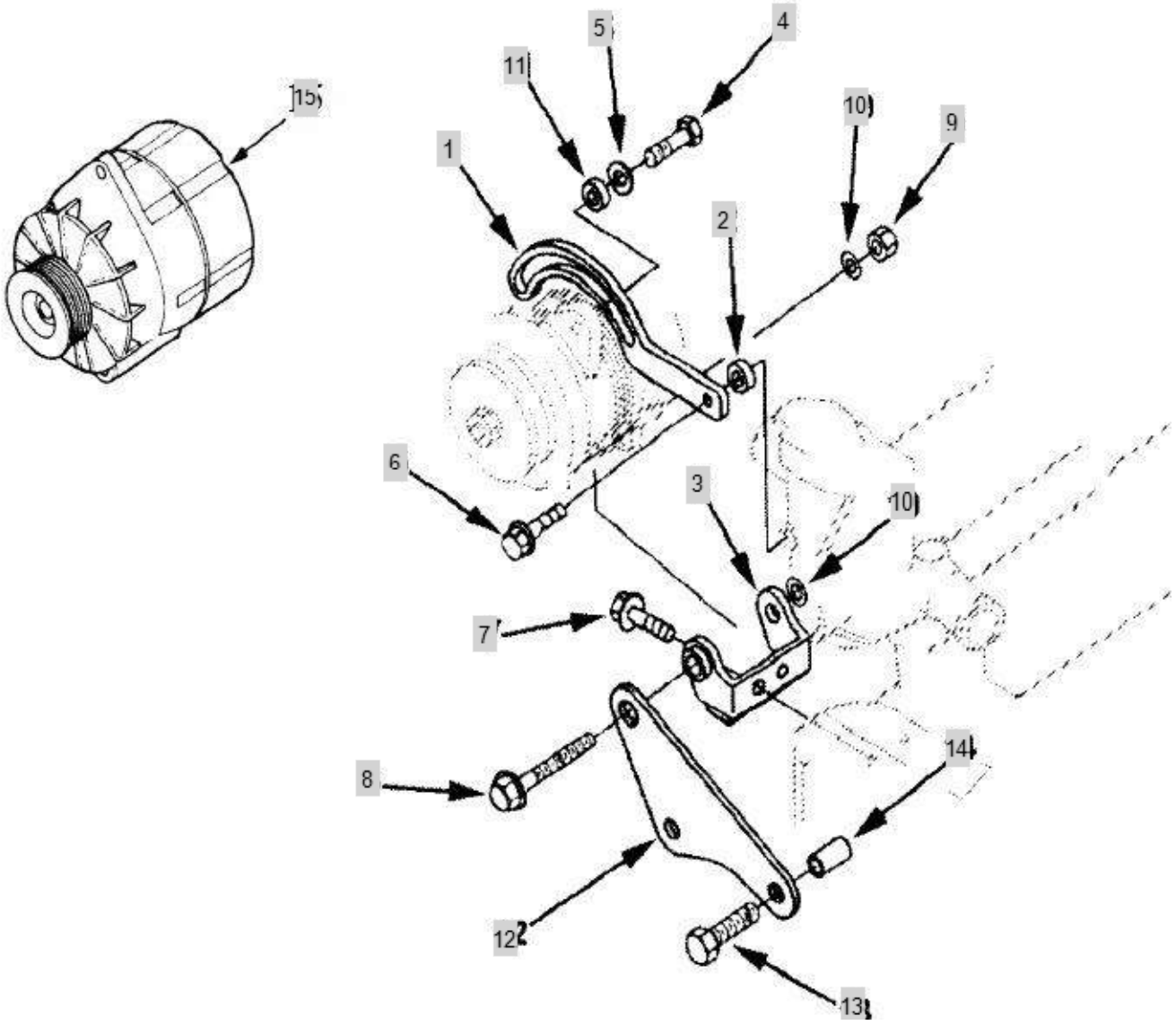

FIG E007 BRANSON 6530C	ALTERNATOR	Year/Month 2020/02

KeyNo.	Part Number	Part Name	Quantity	Other
1	C6204816331	Pivot Plate	1	
2	C2055475870	COLLAR	1	
3	C6204816321	BRACKET	1	
4	C0143500830	SCREW	1	
5	C0164330823	PLAIN WASHER	1	
6	3925344	SCREW	1	
7	C0143500825	SCREW	2	
8	C0101831095	SCREW	1	
9	3094937	NUT, REGULAR HEXAGON	1	
10	3335076	BEVEL WASHER	2	
11	C6130121961	SPACER	1	
12	C6204816370	PLATE	1	
13	C0143500875	BOLT	2	
14	C6204816740	SPACER	1	
15	C6008611611	ALTERNATOR	1	

FIG E008 BRANSON 6530C	FAN BELT PULLY	Year/Month 2020/02

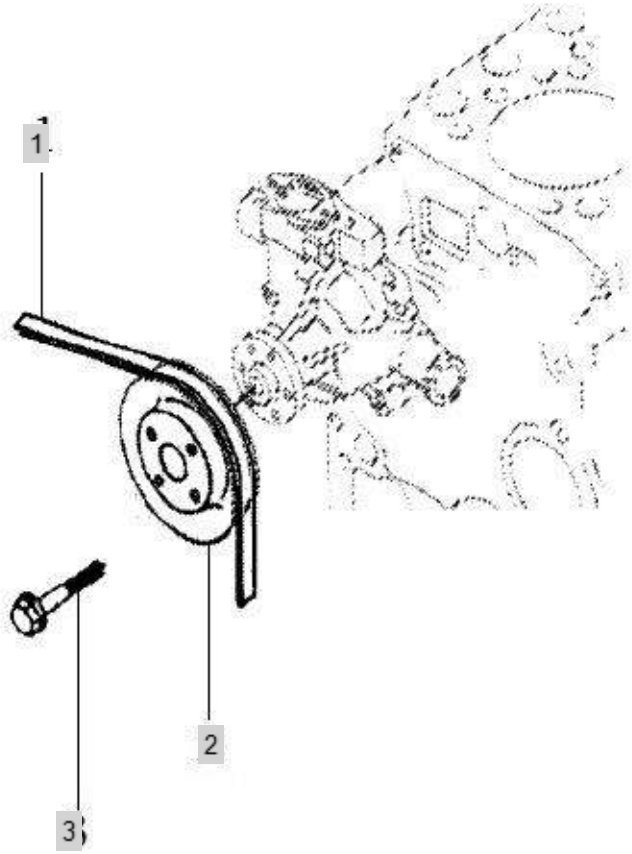

FIG E008 BRANSON 6530C	FAN BELT PULLY	Year/Month 2020/02

KeyNo.	Part Number	Part Name	Quantity	Other
1	C0412021748	BELT	1	
2	C6205613240	PULLEY, WATER PUMP	1	
3	C0143500825	SCREW	1	

FIG E009 BRANSON 6530C	TACH DRIVE COVER	Year/Month 2020/02

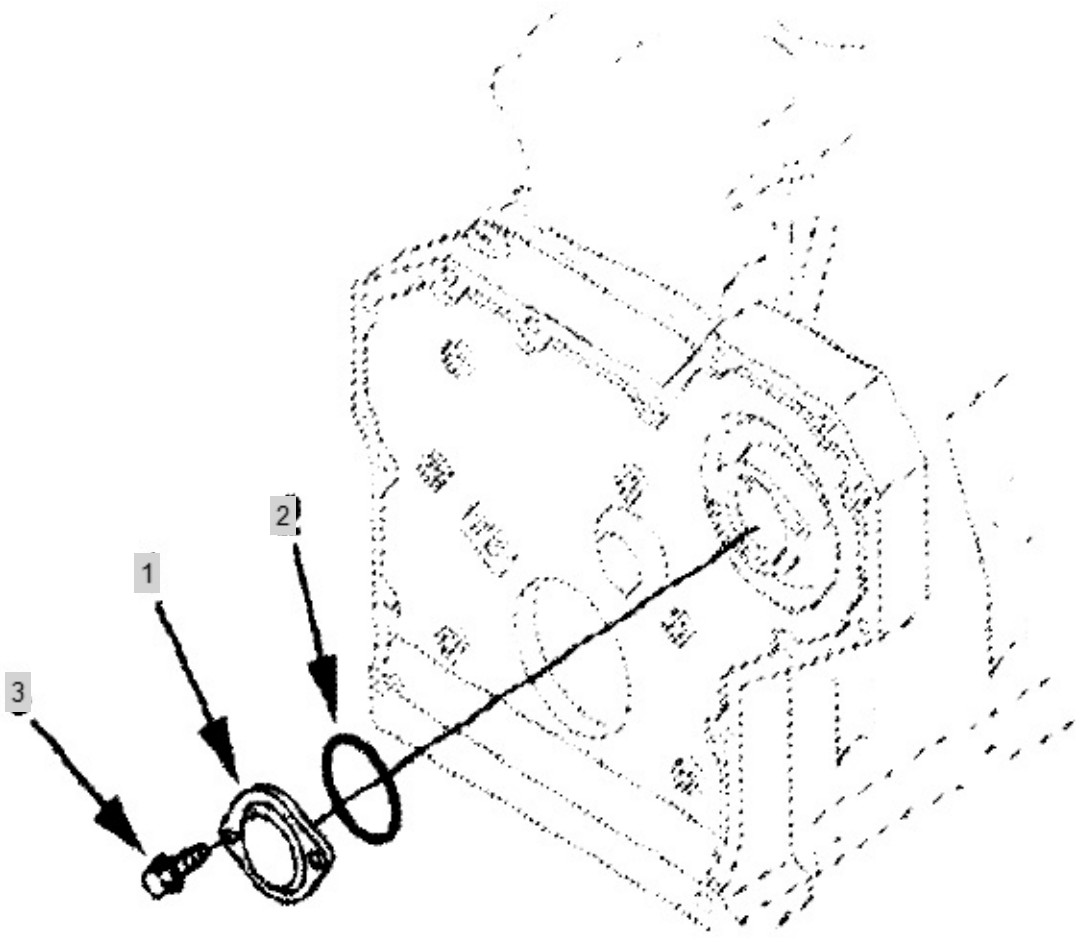

FIG E009 BRANSON 6530C	TACH DRIVE COVER	Year/Month 2020/02

KeyNo.	Part Number	Part Name	Quantity	Other
1	3092361	COVER PLATE	1	
2	3094339	ORING SEAL	1	
3	C0143520616	SCREW	2	

FIG E010 BRANSON 6530C	FUEL FILTER	Year/Month 2020/02

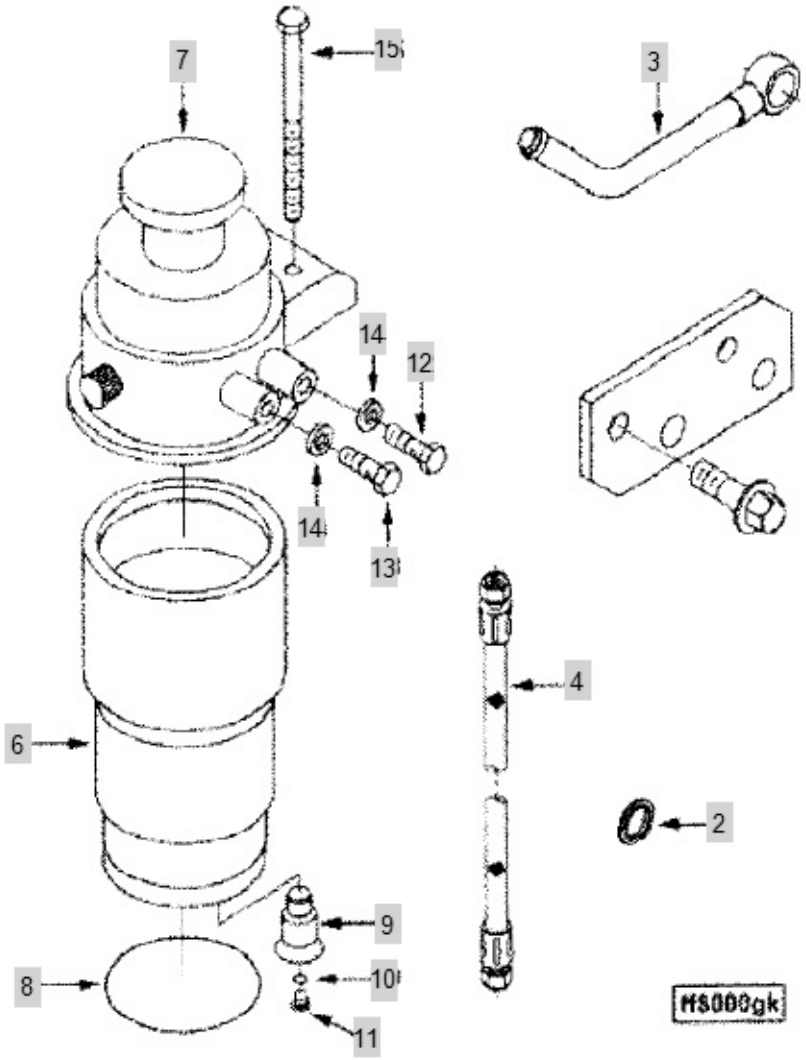

FIG E010 BRANSON 6530C	FUEL FILTER	Year/Month 2020/02

KeyNo.	Part Number	Part Name	Quantity	Other
2	3963983	SUB TO EA00005382A	2	
3	C6204715740	JOINT(4982340)	1	
4	C6204715990	SUB TO-> TA00028335A	1	
6	C6003112110	FUEL, FILTER	1	
7	C6204717210	HEAD, LUB OIL FILTER	1	
8	C6204717220	SEAL, O RING	1	
9	C6204717230	SENSOR, FLUID LEVEL	1	
10	C6204717240	SEAL, O RING	1	
11	C6204717250	PULG, FUEL PUMP DRAIN	1	
12	C6204735710	-> 498234100	1	
13	3094020	SCREW, BANJO CONNECTOR	1	
14	3918192	WASHER, SEALING	1	
15	3925344	SCREW	2	

FIG E011 BRANSON 6530C	INJECTION PUMP AND MOUNTING	Year/Month 2020/02

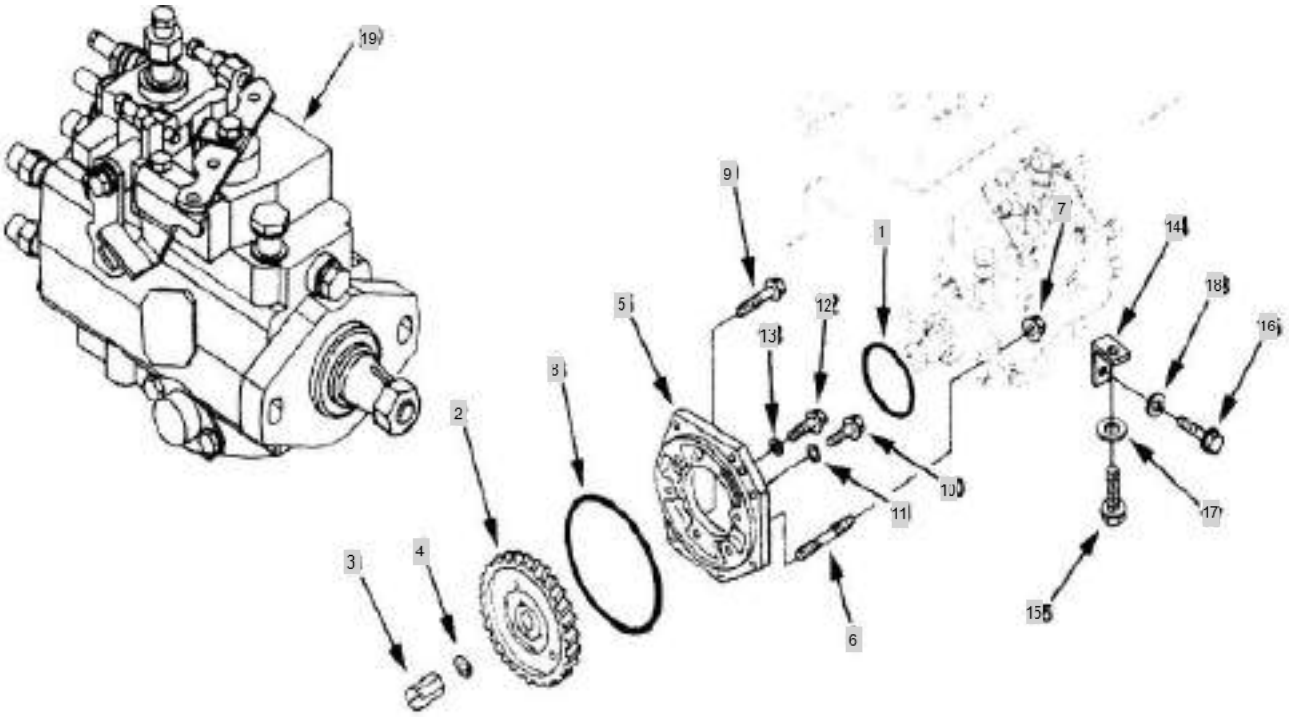

FIG E011 BRANSON 6530C	INJECTION PUMP AND MOUNTING	Year/Month 2020/02

KeyNo.	Part Number	Part Name	Quantity	Other
1	3094339	ORING SEAL	1	
2	C6204713220	FUEL PUMP GEAR	1	
3	C6206713630	NUT	1	
4	C6130321361	SUB TO-> 498240000	1	
5	C6204713311	Mount Plate	1	
6	C0116050830	STUD	2	
7	C0158400806	NUT	2	
8	C0700002135	SEAL, O RING	1	
9	C6204713190	SCREW	1	
10	C0143520812	SUB TO-> 309395600	1	
11	3093980	SEALING WASHER	1	
12	C6206213930	SCREW	1	
13	C0164330623	PLAIN WASHER	1	
14	C6202731850	FUEL PUMP BRKT	1	
15	C0143521016	SCREW	1	
16	C0143520816	SCREW	1	
17	3093799	PLAIN WASHER	1	
18	C0164330823	PLAIN WASHER	1	
19	C6204711121	PUMP, INJECTION FUEL	1	

FIG E012 BRANSON 6530C	INJECTION TUBES	Year/Month 2020/02

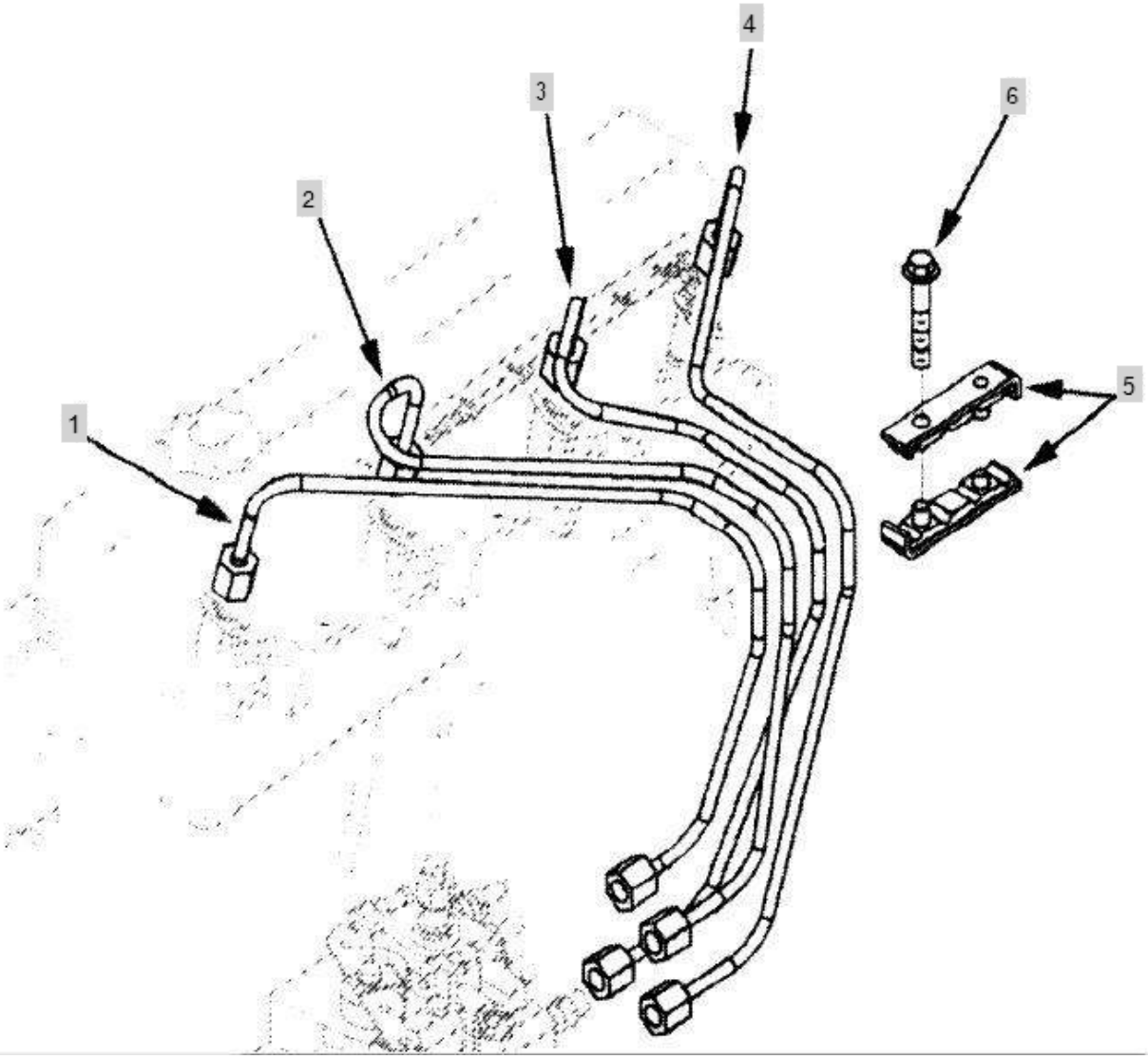

FIG E012 BRANSON 6530C	INJECTION TUBES	Year/Month 2020/02

KeyNo.	Part Number	Part Name	Quantity	Other
1	C6204715510	INJECTOR FUEL TUBE	1	
2	C6204715520	INJECTOR FUEL TUBE	1	
3	C6204715530	INJECTOR FUEL TUBE	1	
4	C6204715540	INJECTOR FUEL TUBE	1	
5	C6204715710	TUBE CLAMP	1	
6	C0143520625	SCREW	2	

FIG E013 BRANSON 6530C	FUEL RETURN	Year/Month 2020/02

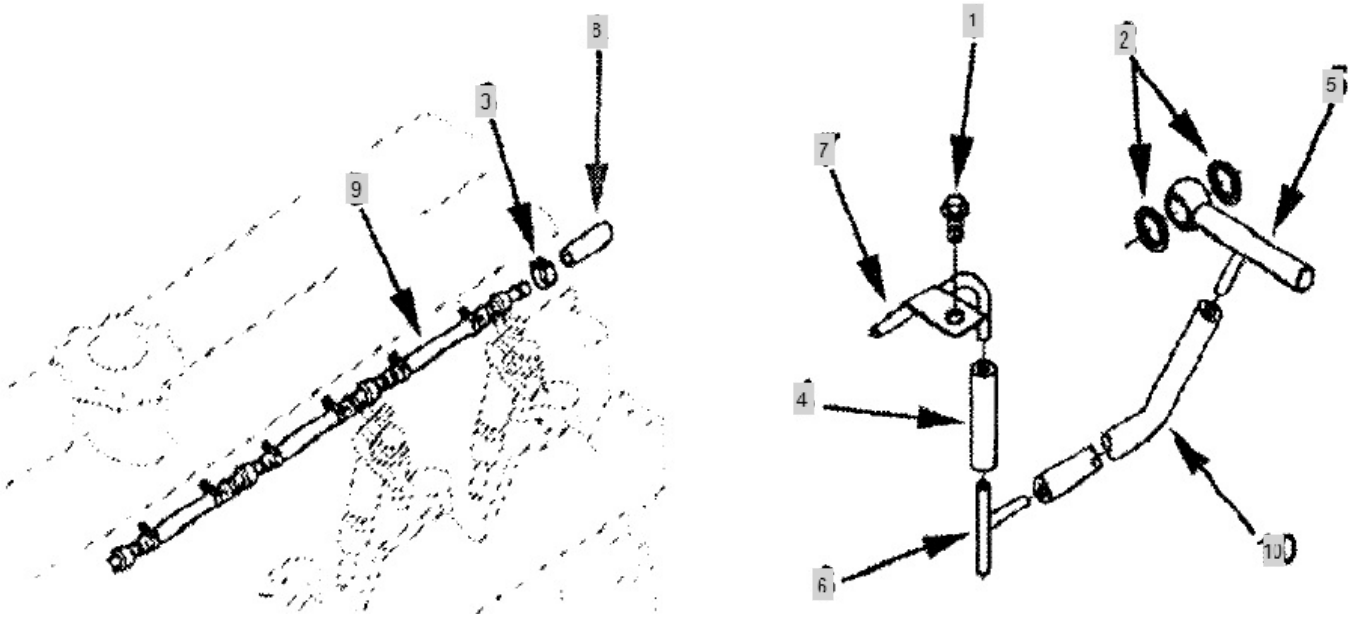

FIG E013 BRANSON 6530C	FUEL RETURN	Year/Month 2020/02

KeyNo.	Part Number	Part Name	Quantity	Other
1	C0143500612	SCREW	1	
2	C0700501212	GASKET, TURBOCHARGER	2	
3	C0728500100	CLIP	14	
4	C6202719450	Hose, Elbow	2	
5	C6204715550	SUB TO-> 525462400	1	
6	C6204715560	CONNECTOR	1	
7	C6204715570	CONNECTOR	1	
8	C6204715581	Cap, Tube	2	
9	C6204719100	Tube, Fuel Drain	2	
10	C6204719140	Hose, Plain	2	

FIG E014 BRANSON 6530C	GEAR COVER	Year/Month 2020/02

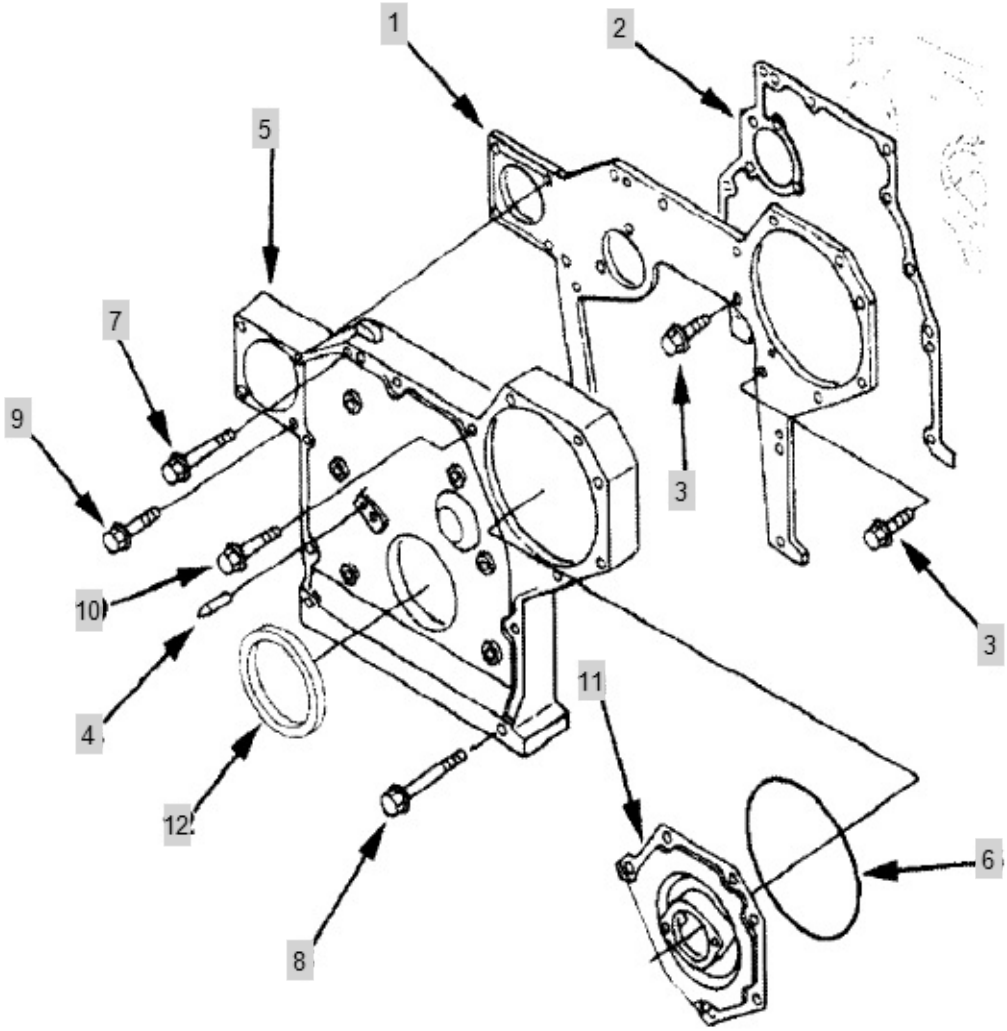

FIG E014 BRANSON 6530C	GEAR COVER	Year/Month 2020/02

KeyNo.	Part Number	Part Name	Quantity	Other
1	C6204213240	FRONT PLATE	1	
2	C6206213840	GASKET, FRONT COVER	1	
3	C0143520816	SCREW	2	
4	C6204213850	TIMING PIN	1	
5	C6204213123	GEAR COVER	1	
6	C0700002135	SEAL, O RING	1	
7	C0143520855	SCREW	5	
8	C0143520870	SCREW	2	
9	C0143500860	SCREW	4	
10	C0143520865	SCREW	6	
11	C6204213130	ACC. DRIVE COVER	1	
12	C6204213510	SEAL, OIL	1	

FIG E015 BRANSON 6530C	IDLER GEAR	Year/Month 2020/02

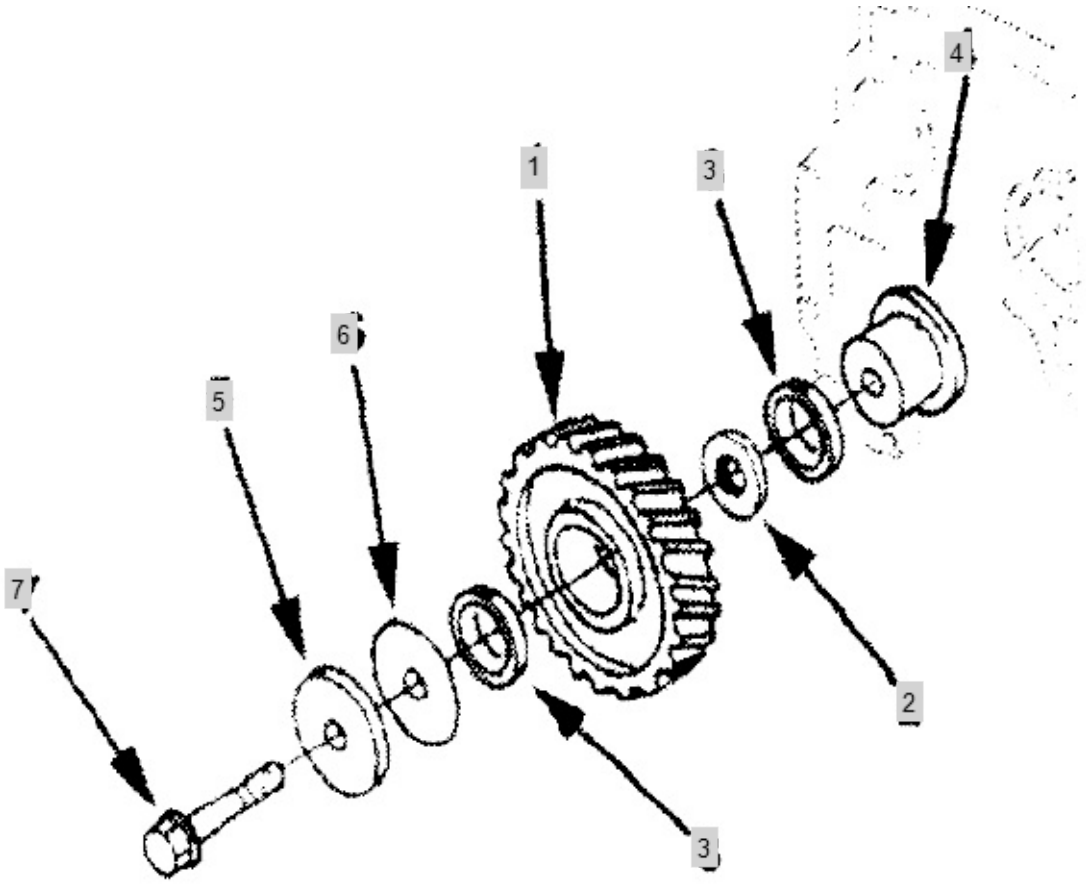

FIG E015 BRANSON 6530C	IDLER GEAR	Year/Month 2020/02

KeyNo.	Part Number	Part Name	Quantity	Other
1	C6204316110	GEAR, IDLER	1	
2	C0406505520	SPACER	1	
3	C0600232006	BEARING, BALL	2	
4	C6204316130	SHAFT	1	
5	C6144212420	PLATE	1	
6	C6144212500	SHIM	1	
7	C0143501270	SCREW	1	

FIG E016 BRANSON 6530C	WATER PUMP	Year/Month 2020/02

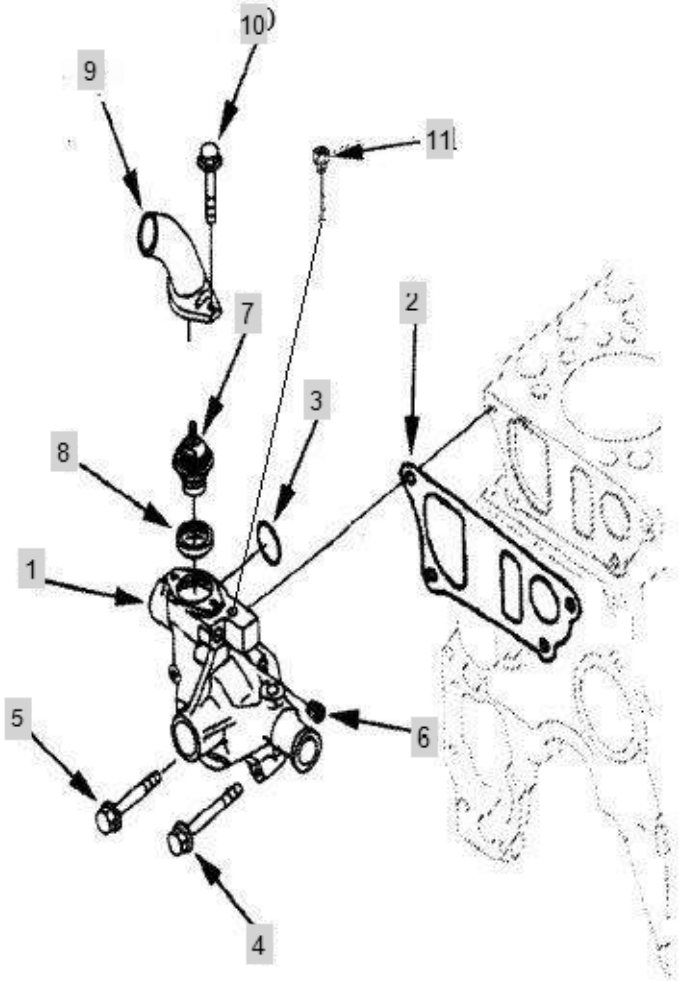

FIG E016 BRANSON 6530C	WATER PUMP	Year/Month 2020/02

KeyNo.	Part Number	Part Name	Quantity	Other
NI	3800883	PUMP, WATER	1	
1	C6204611600	SUB TO-> 380088300	1	
2	C6206611730	SUB TO-> C6206611731	1	
3	C0700003040	SUB TO-> TA00028345A	1	
4	C0143520855	SCREW	3	
5	C0143520850	SCREW	1	
6	C2873511470	PLUG	1	
NI	3800884	THERMOSTAT	1	
7	C6004216120	THERMOSTAT->380088400	1	
8	C6140116331	SUB TO-> 4982227	1	
9	C6204116421	Cnn Gasket	1	
10	C143520820	SCREW	2	
11	C0704200312	PIPE PLUG	2	

FIG E017 BRANSON 6530C	CYLINDER HEAD	Year/Month 2020/02

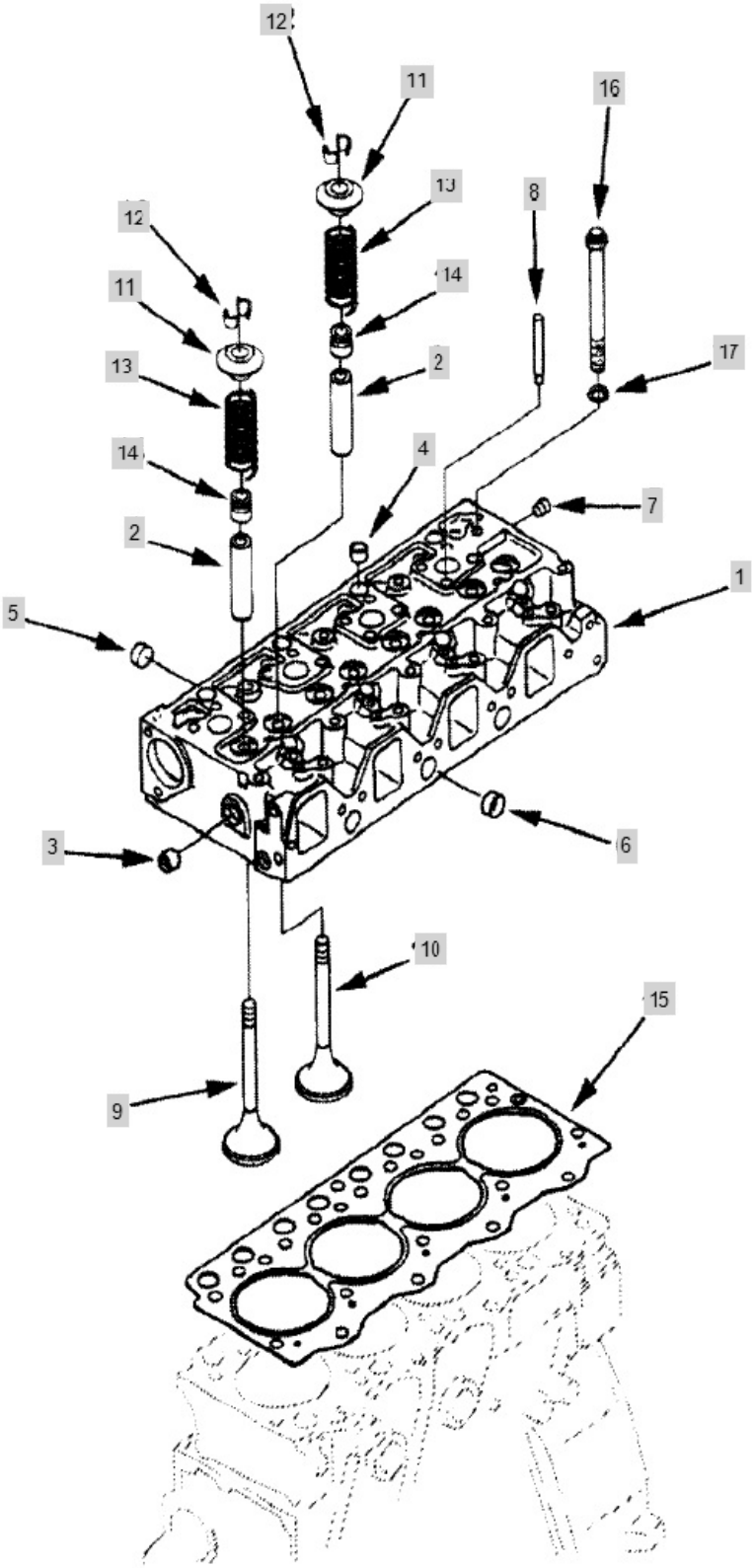

FIG E017 BRANSON 6530C	CYLINDER HEAD	Year/Month 2020/02

KeyNo.	Part Number	Part Name	Quantity	Other
NI	3800873	Cylinder Head Assemble	1	
1	C6204111501	VALVE GUIDE	1	
2	EA00001777A	VALVE GUIDE	8	C6204191310
3	3093877	EXPANSION PLUG	1	
4	3093782	Expansing Plug	9	
5	C0704642216	EXPANSING PLUG	3	
6	3094064	EXPANSING PLUG	11	
7	3093719	PIPE PLUG	1	
8	C6204118910	AIR INLET PIPE	2	
9	C6207414110	VALVE, INTAKE	4	
10	C6204414210	VALVE, EXHAUST	4	
11	C6204414510	Valve Seat	8	
12	C6204414520	PIn Cot	16	
13	C6204414410	Valve Spring	8	
14	C6204414541	SEAL, VALVE STEM	8	
15	C6204111830	Head gasket	1	
16	C6204131610	CAP SCREW TWELEVE POINT	17	
17	3093879	PLAIN WASHER	17	

FIG E018 BRANSON 6530C	INTAKE MANIFOLD	Year/Month 2020/02

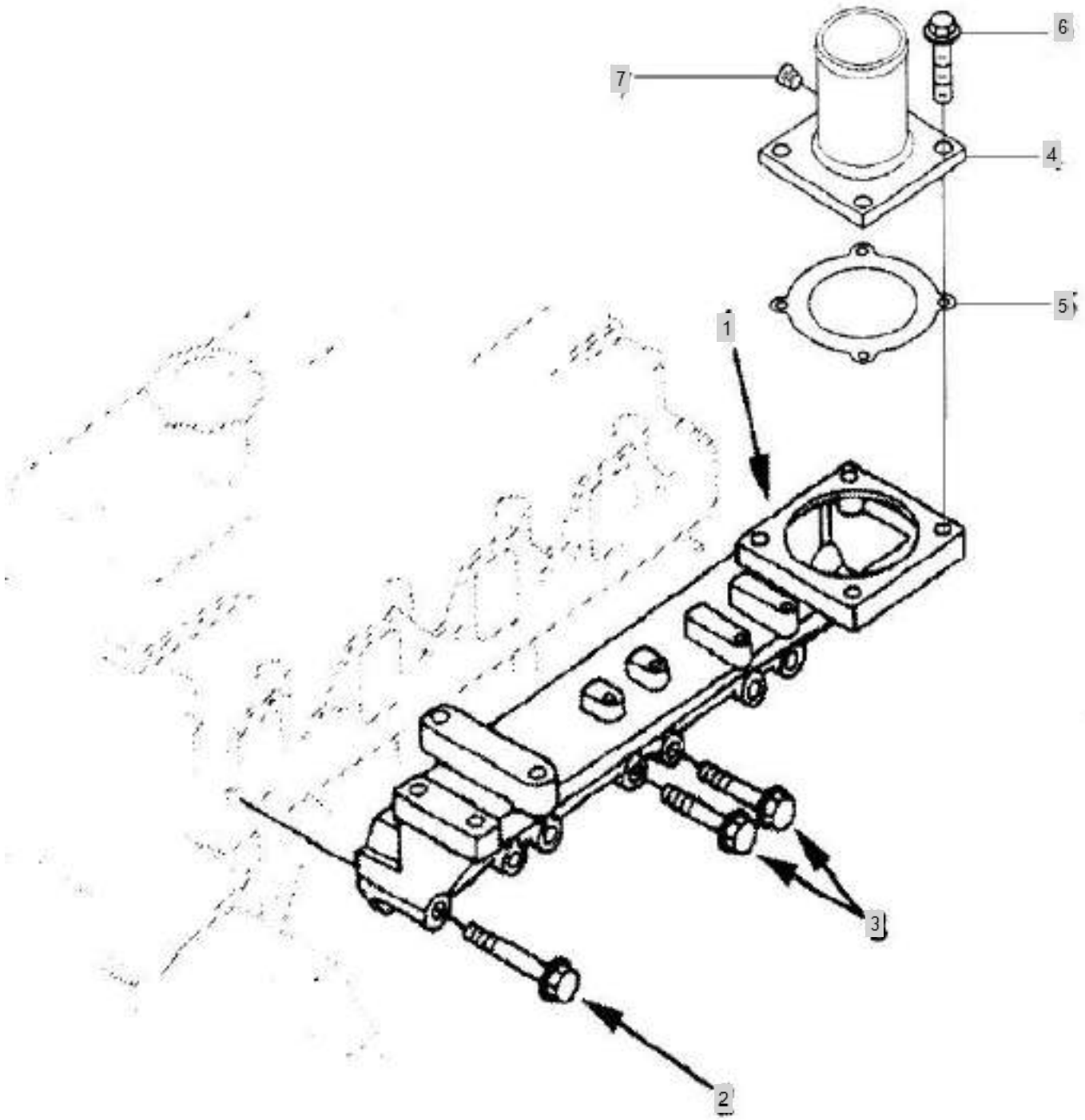

FIG E018 BRANSON 6530C	INTAKE MANIFOLD	Year/Month 2020/02

KeyNo.	Part Number	Part Name	Quantity	Other
1	C6204114122	AIR INTAKE MANIFOLD	1	
2	C0143521075	SCREW	6	
3	C0143521065	SCREW	2	
4	C6204124240	AIR INTAKE CONNECTION	1	
5	C6136114850	SUB TO-> C6204114850	1	
6	C0143501070	SCREW	4	
7	C0272020204	PIPE PLUG	1	

FIG E019 BRANSON 6530C	INJECTOR	Year/Month 2020/02

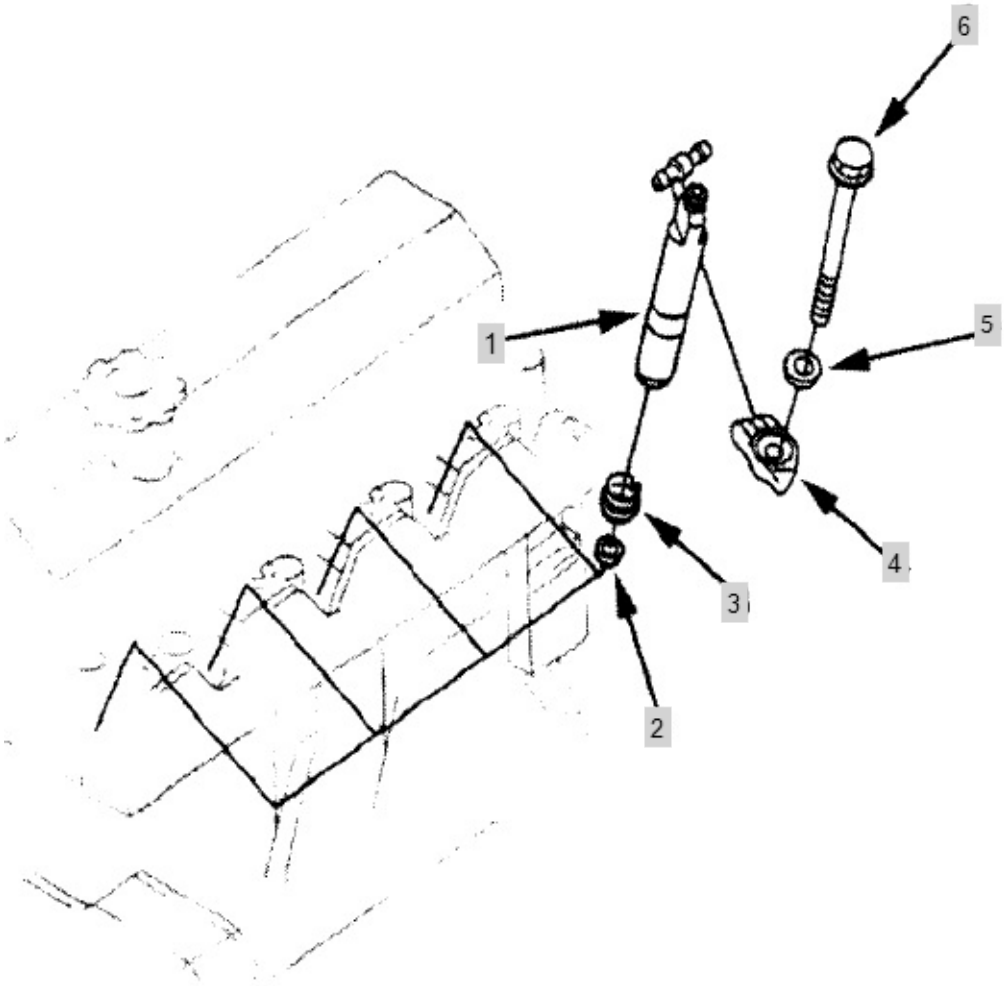

FIG E019 BRANSON 6530C	INJECTOR	Year/Month 2020/02

KeyNo.	Part Number	Part Name	Quantity	Other
NI	3800875	IINJECTOR	4	
1	C6204113100	SUB TO-> 3800875	1	
2	C6204113880	GASKET, INJECTOR	1	
3	C6204113850	SEAL, DUST	1	
4	C6204113812	Retaining Clamp	4	
5	C6204113830	Sealing Washer	4	
6	C0143501035	SCREW	4	

FIG E020 BRANSON 6530C	ENGINE BRACKET	Year/Month 2020/02

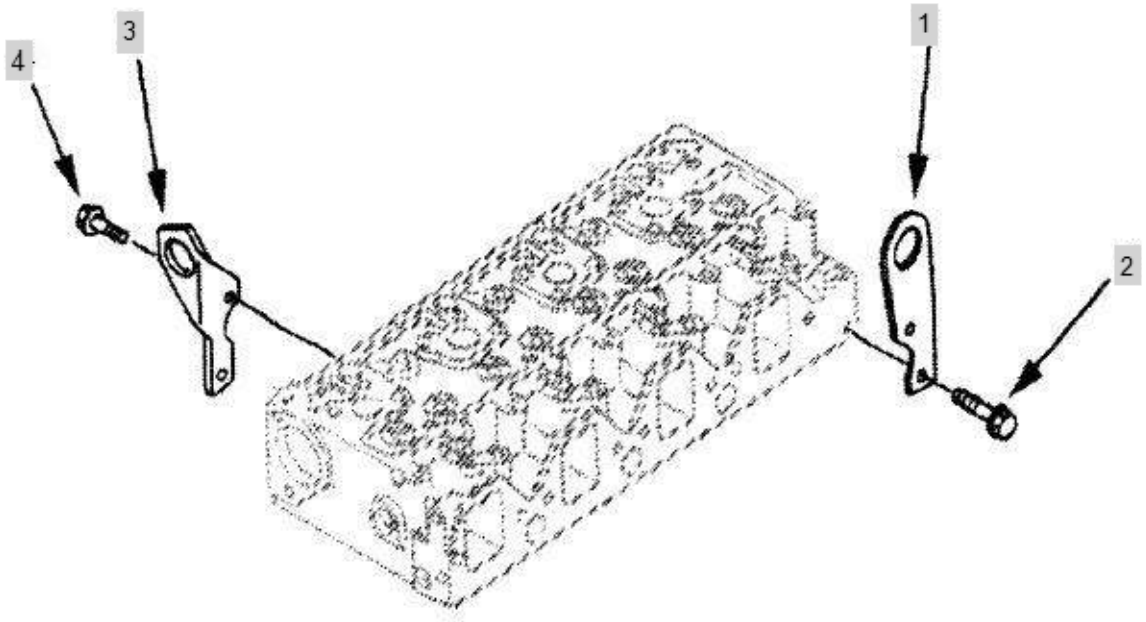

FIG E020 BRANSON 6530C	ENGINE BRACKET	Year/Month 2020/02

KeyNo.	Part Number	Part Name	Quantity	Other
1	C6206111930	ENGINE SUPPORT	1	
2	C0143501020	SCREW	2	
3	C6206111920	ENGINE SUPPORT	1	
4	C0143501020	SCREW	2	

FIG E021 BRANSON 6530C	OIL GAUGE AND EXPANSION PLUGS	Year/Month 2020/02

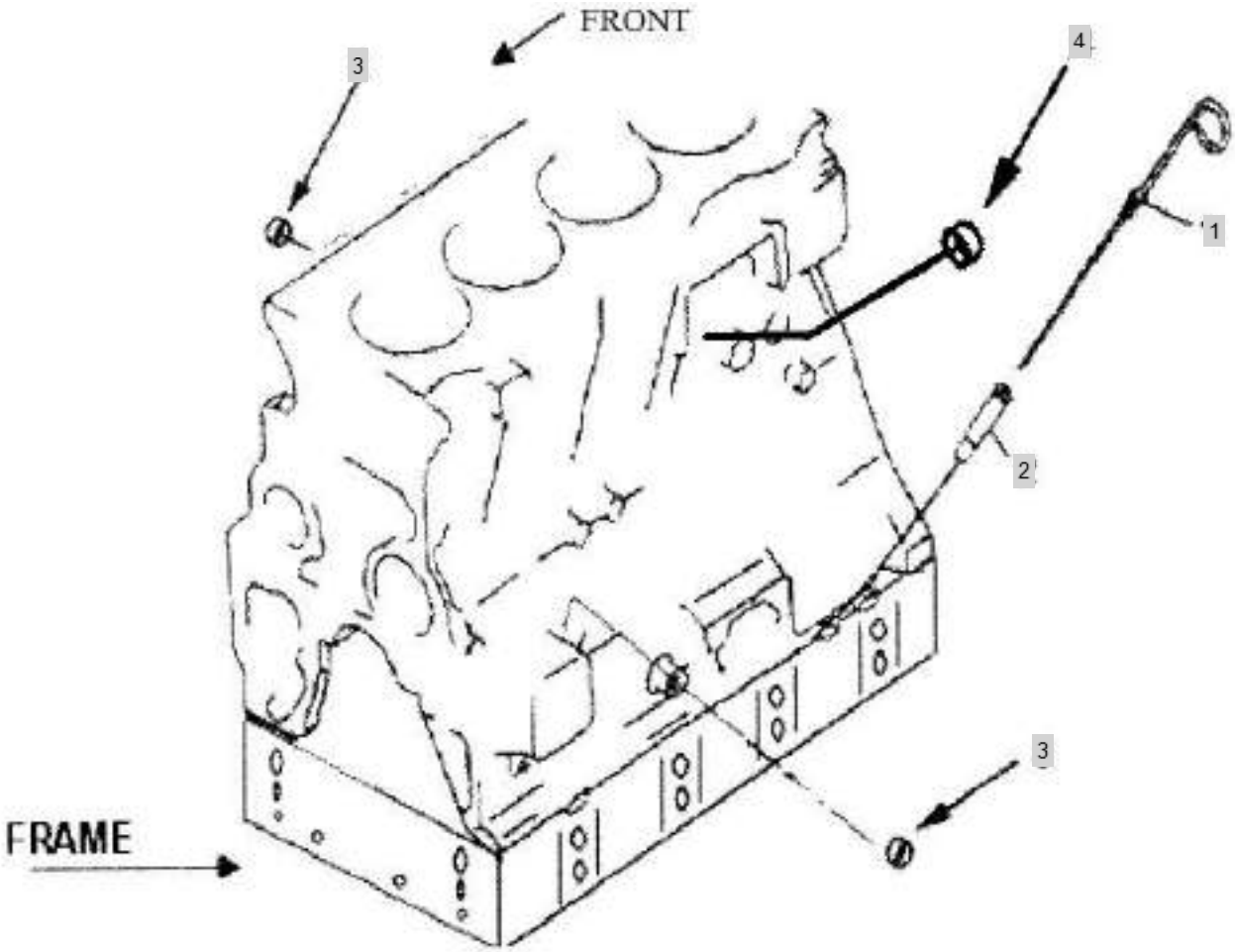

FIG E021 BRANSON 6530C	OIL GAUGE AND EXPANSION PLUGS	Year/Month 2020/02

KeyNo.	Part Number	Part Name	Quantity	Other
1	C6204235341	Oil Gauge	1	
2	C6204235440	OIL GUAGE TUBE	1	
3	C0704621210	EXPANSING PLUG	2	
4	C0704623016	EXPANSING PLUG	1	

FIG E022 BRANSON 6530C	OIL PUMP	Year/Month 2020/02

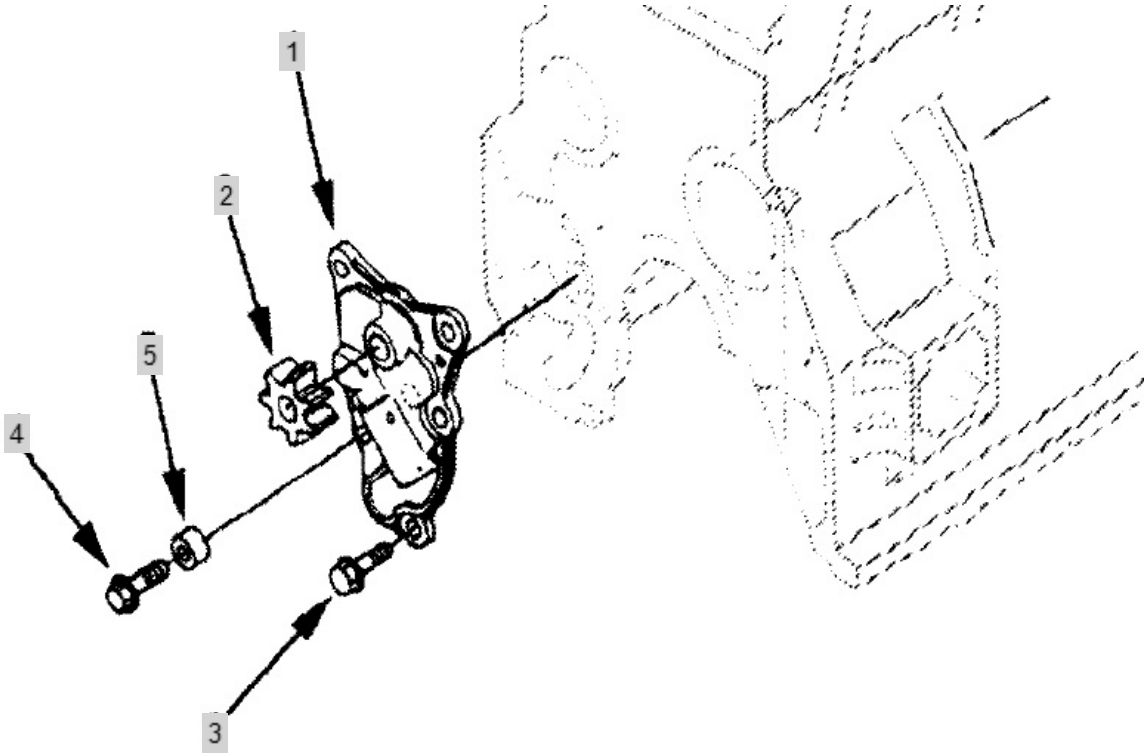

FIG E022 BRANSON 6530C	OIL PUMP	Year/Month 2020/02

KeyNo.	Part Number	Part Name	Quantity	Other
1	C6207511201	OIL PUMP -> 494577400	1	
2	C6207511601	Gear, Lube Oil Pump	1	
3	C0143520816	SCREW	4	
4	C0143520825	SCREW	4	
5	C6691418230	MOUNTING SPACER	1	

FIG E023 BRANSON 6530C	OIL FILLER PLATE	Year/Month 2020/02

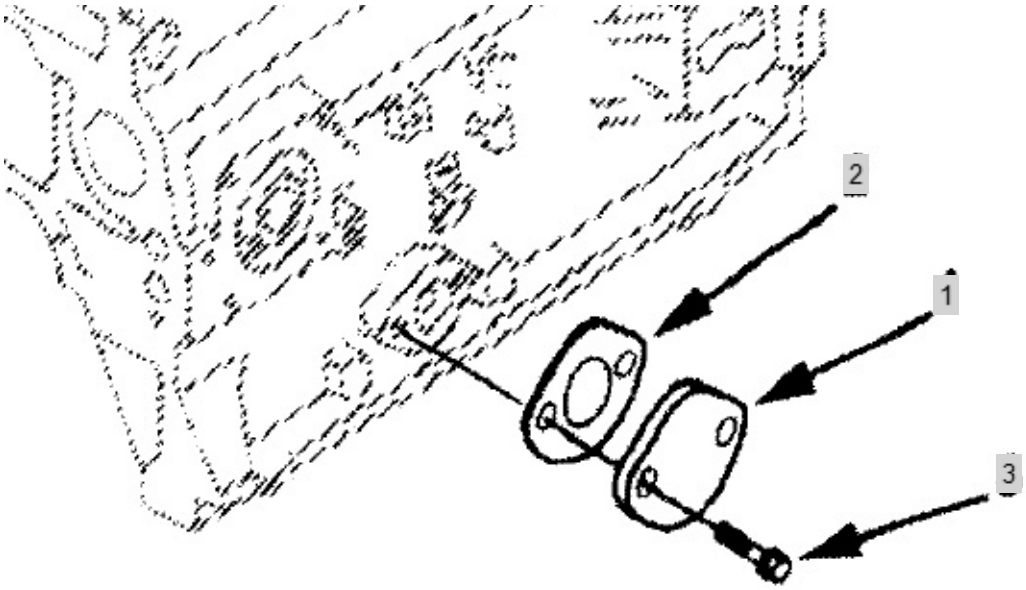

FIG E023 BRANSON 6530C	OIL FILLER PLATE	Year/Month 2020/02

KeyNo.	Part Number	Part Name	Quantity	Other
1	C6204216710	PLATE ACOVER	1	
2	C6204216811	COVER PLATE GASKET	1	
3	C0143520814	SCREW	2	

FIG E024 BRANSON 6530C	OIL FILTER AND COOLER	Year/Month 2020/02

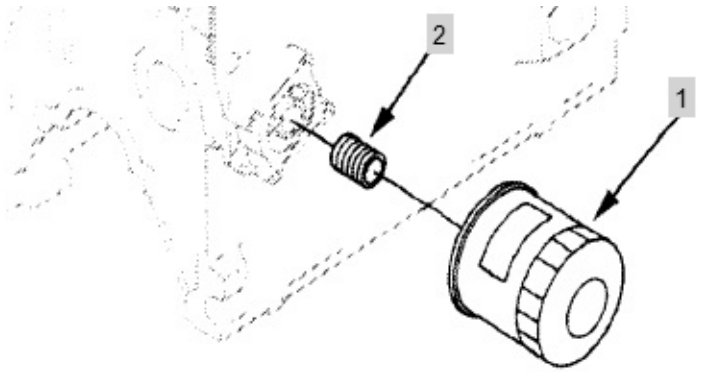

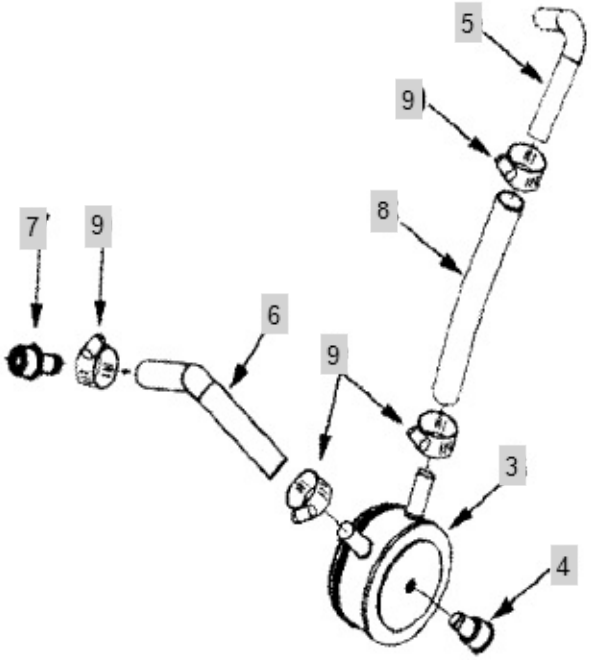

FIG E024 BRANSON 6530C	OIL FILTER AND COOLER	Year/Month 2020/02

KeyNo.	Part Number	Part Name	Quantity	Other
1	C6002112110	FILTER,LUBE OIL	1	
2	C6201515910	HOSE NIPPLE	1	
3	C6205615400		1	
4	C6205615410		1	
5	C6205615261		1	
6	C6205615271		1	
7	C6205615251		1	
8	C6205615281		1	
9	C0728100259	CLAMP	4	

FIG E025 BRANSON 6530C	ROD AND PISTON	Year/Month 2020/02

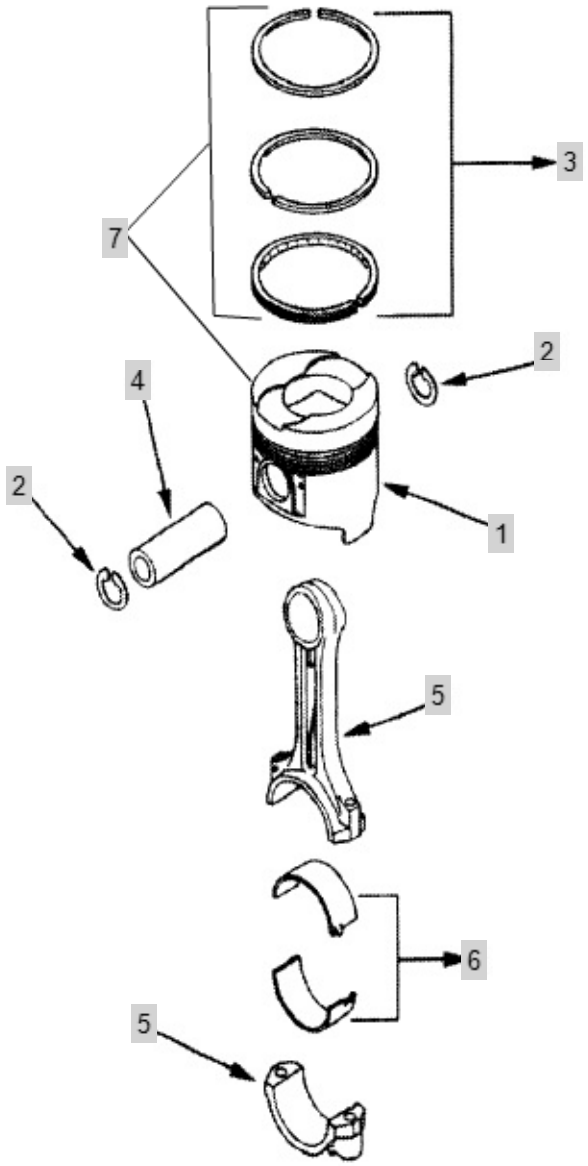

FIG E025 BRANSON 6530C	ROD AND PISTON	Year/Month 2020/02

KeyNo.	Part Number	Part Name	Quantity	Other
1	C6204312190	Engine Piston	1	
2	C0406503012	Retaining Ring	2	
3	C6205312200	SET, PISTON RING	1	
4	C6204312410	Piston Pin	4	
5	C6204313101	ROD, ENGINE CONNECTING	4	
6	C6207313300	BEARING, CONNECTING ROD	4	
7	380077	PISTON KIT	4	

FIG E026 BRANSON 6530C	ROCKER ARM	Year/Month 2020/02

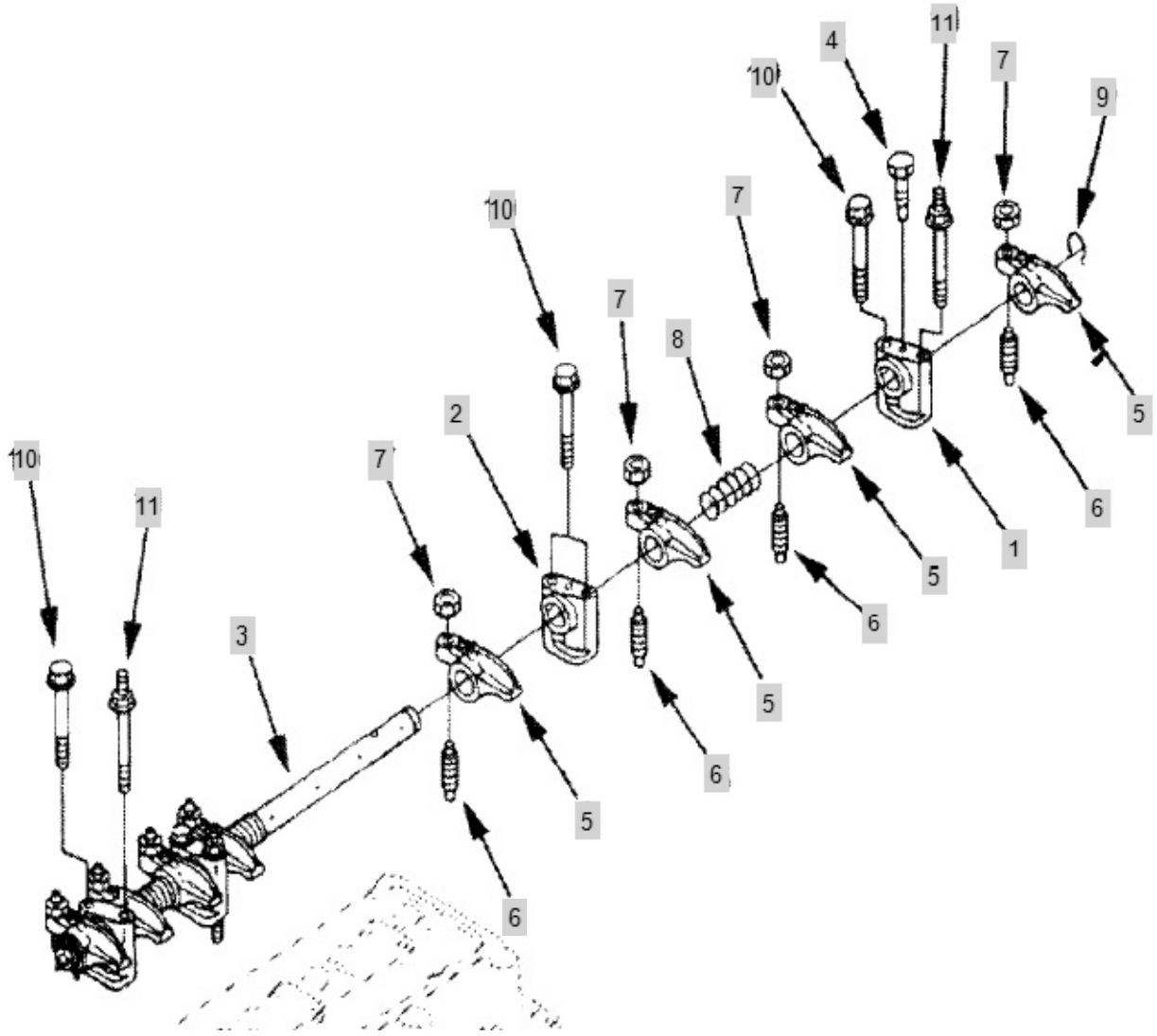

FIG E026 BRANSON 6530C	ROCKER ARM	Year/Month 2020/02

KeyNo.	Part Number	Part Name	Quantity	Other
1	C6204415110	ROCKER LEVER COVER BRKT	1	
2	C6204415120	ROCKER LEVER COVER BRKT	1	
3	C6204415500	ROCKER LEVER SHAFT	1	
4	C6221415310	SCREW	1	
5	C6202435410	ROCKER LEVER	8	
6	C6221415410	SCREW, CROSSHEAD ADJUSTING	8	
7	C6221415420	NUT	8	
8	C6202435320	COMPRESSION SPRING	3	
9	C6204415620	CLIP	2	
10	C0143500865	SCREW	5	
11	C6204415710	SCREW	3	

FIG E027 BRANSON 6530C	SENSOR PLUMBING	Year/Month 2020/02

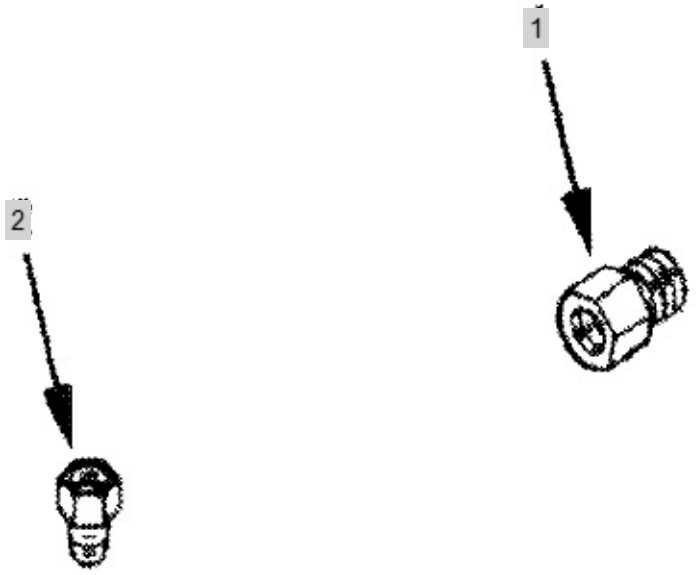

FIG E027 BRANSON 6530C	SENSOR PLUMBING	Year/Month 2020/02

KeyNo.	Part Number	Part Name	Quantity	Other
1	C6151211230	NIPPLE	1	
2	C6162834810	SUB TO -> 3906619	1	

FIG E028 BRANSON 6530C	VALVE COVER	Year/Month 2020/02

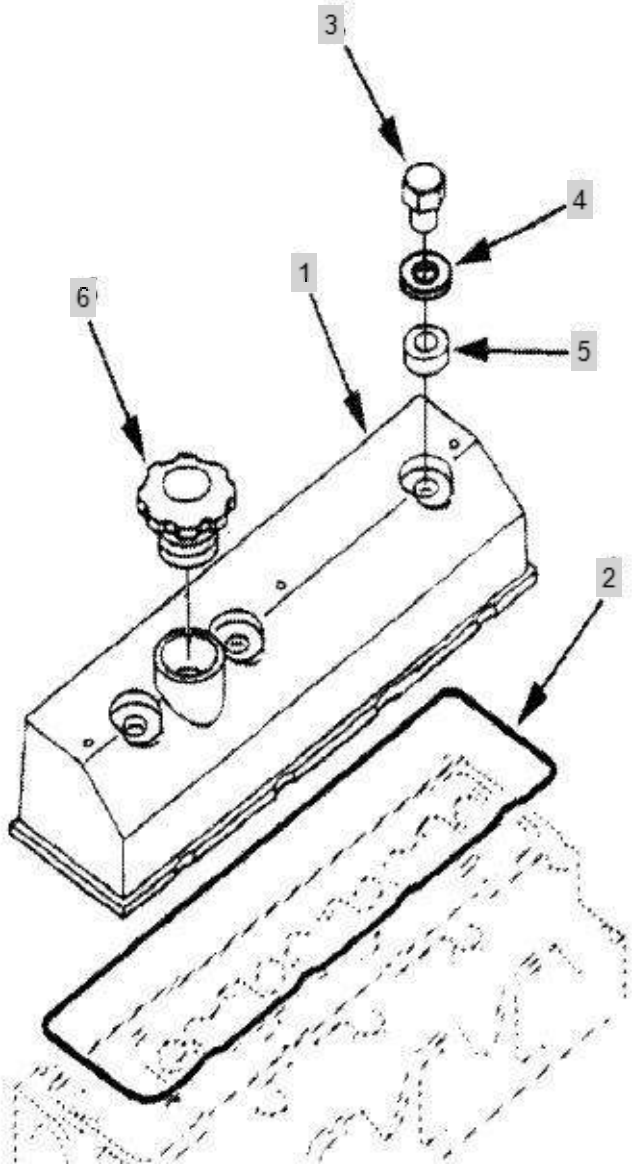

FIG E028 BRANSON 6530C	VALVE COVER	Year/Month 2020/02

KeyNo.	Part Number	Part Name	Quantity	Other
1	C6204118130	VALVE COVER	1	
2	C6204118810	SEAL, O RING	1	
3	C6136118120	HEXAGON NUT	3	
4	C6136118130	PLAIN WASHER	3	
5	C6136118142	NOISE ISOLATOR	3	
6	C6130128610	Filler Cap	1	

FIG E029 BRANSON 6530C	EXHAUST MANIFOLD	Year/Month 2020/02

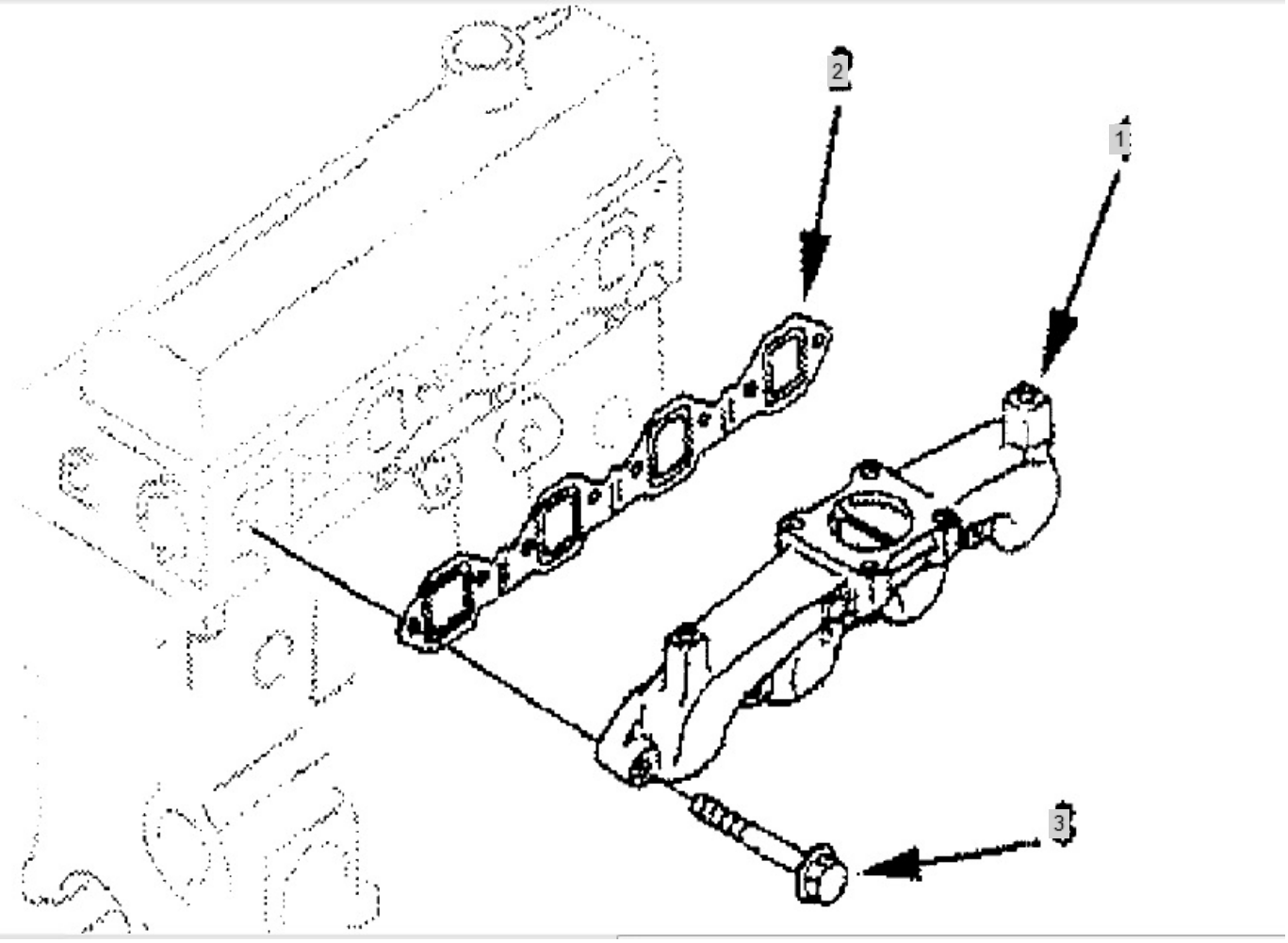

FIG E029 BRANSON 6530C	EXHAUST MANIFOLD	Year/Month 2020/02

KeyNo.	Part Number	Part Name	Quantity	Other
1	C6204135110	EXHAUST MANIFOLD	1	
2	C6205115810	->4944175	1	
3	C0143501045	SCREW	8	

FIG E030 BRANSON 6530C	BALANCE ASSY	Year/Month 2020/02

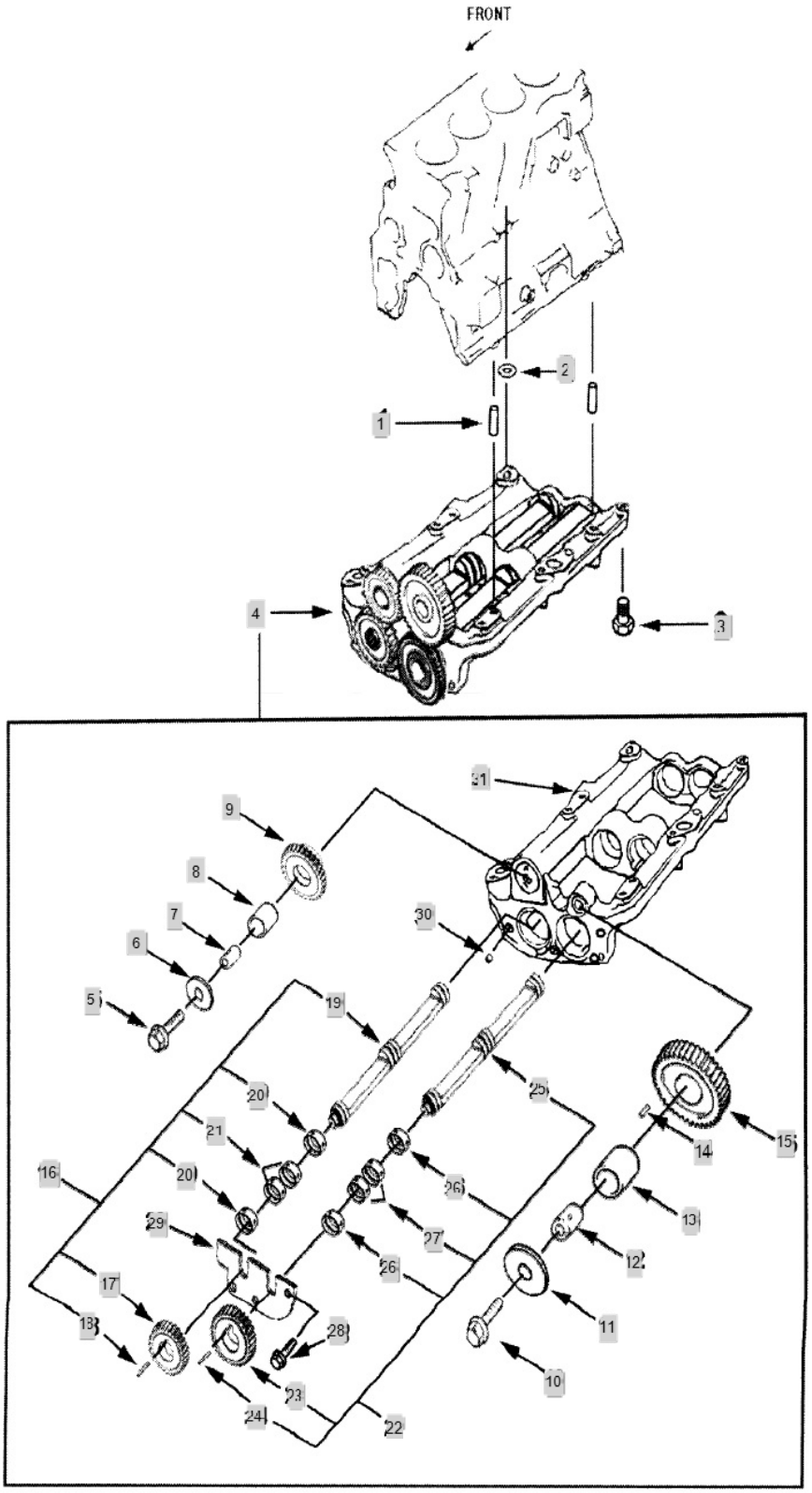

FIG E030 BRANSON 6530C	BALANCE ASSY	Year/Month 2020/02

KeyNo.	Part Number	Part Name	Quantity	Other
1	C0402001638	DOWEL PIN	2	
2	C0700002012	Sal Ring	1	
3	C0143500840	SCREW	9	
4	C6204319301	Balance Assy	1	
5	C0143500835	SCREW	1	
6	C6204319340	PLATE	1	
7	C6204319440	SHAFT	1	
8	C6204316320	BUSHING	1	
9	C6204319240	GEAR	1	
10	C0143500835	SCREW	1	
11	C6204319330	PLATE	1	
12	C6204319450	SHAFT	1	
13	C6150316120	BUSHING	1	
14	C0402500308	DOWEL PIN	1	
15	C6204319230	GEAR	1	
16	C6204319310	BALANCE, SHAFT ASSY	1	
17	C6204319210	GEAR	1	
18	C0401000310	KEY	1	
19	C6204319131	BALANCE, SHAFT	1	
20	C6204211480	BUSHING	2	
21	C6204211440	BUSHING	2	
22	C6204319321	SUB TO-> TA00026460A	1	
23	C6204319220	GEAR	1	
24	C0401000310	KEY	1	
25	C6204319131	BALANCE, SHAFT	1	
26	C6204211470	BUSHING	2	
27	C6204211440	BUSHING	2	
28	C0143500816	SCREW	3	
29	C6204319150	PLATE	1	
30	C0704370108	PLUG	6	
31	C6204219340	BALANCE HOUSING	1	

FIG E031 BRANSON 6530C	TUBE SUCTION	Year/Month 2020/02

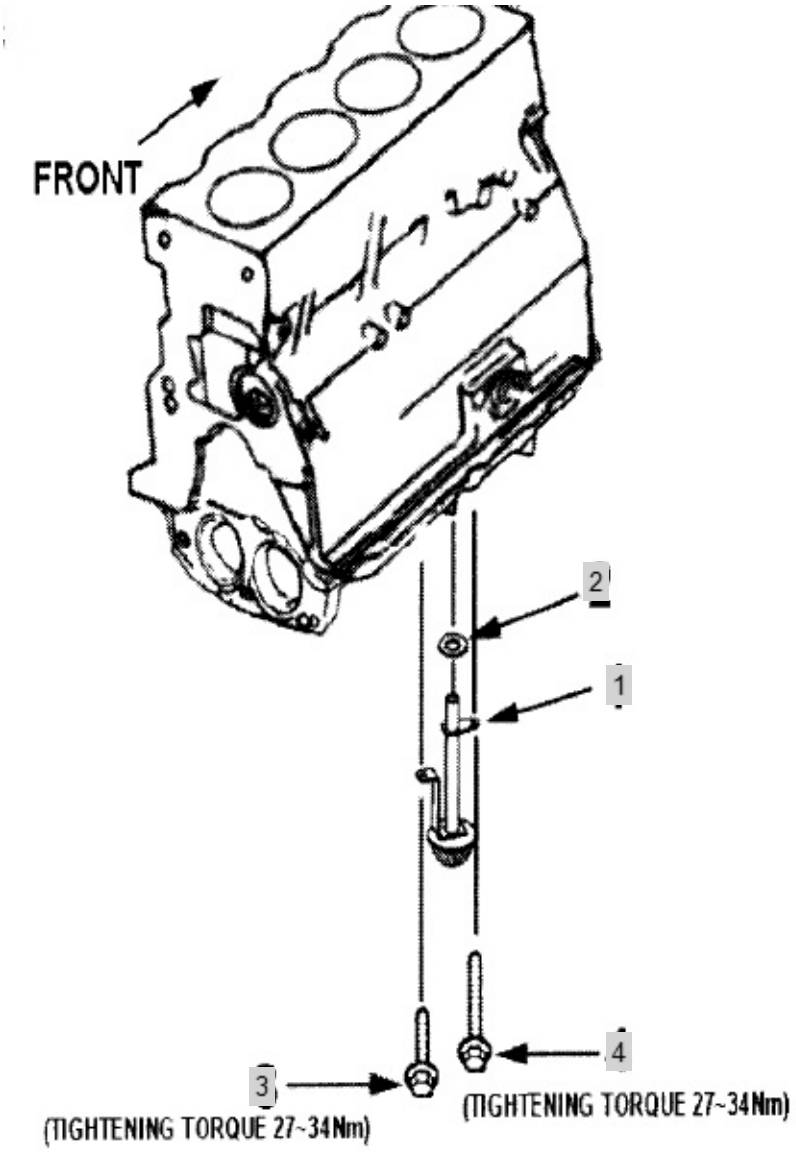

FIG E031 BRANSON 6530C	TUBE SUCTION	Year/Month 2020/02

KeyNo.	Part Number	Part Name	Quantity	Other
1	C6204516170	SUCTION TUBE	1	
2	C6204516122	O-Ring Seal	1	
3	C0143500814	SCREW	1	
4	C0143500845	SCREW	1	

FIG E032 BRANSON 6530C	FRAME	Year/Month 2020/02

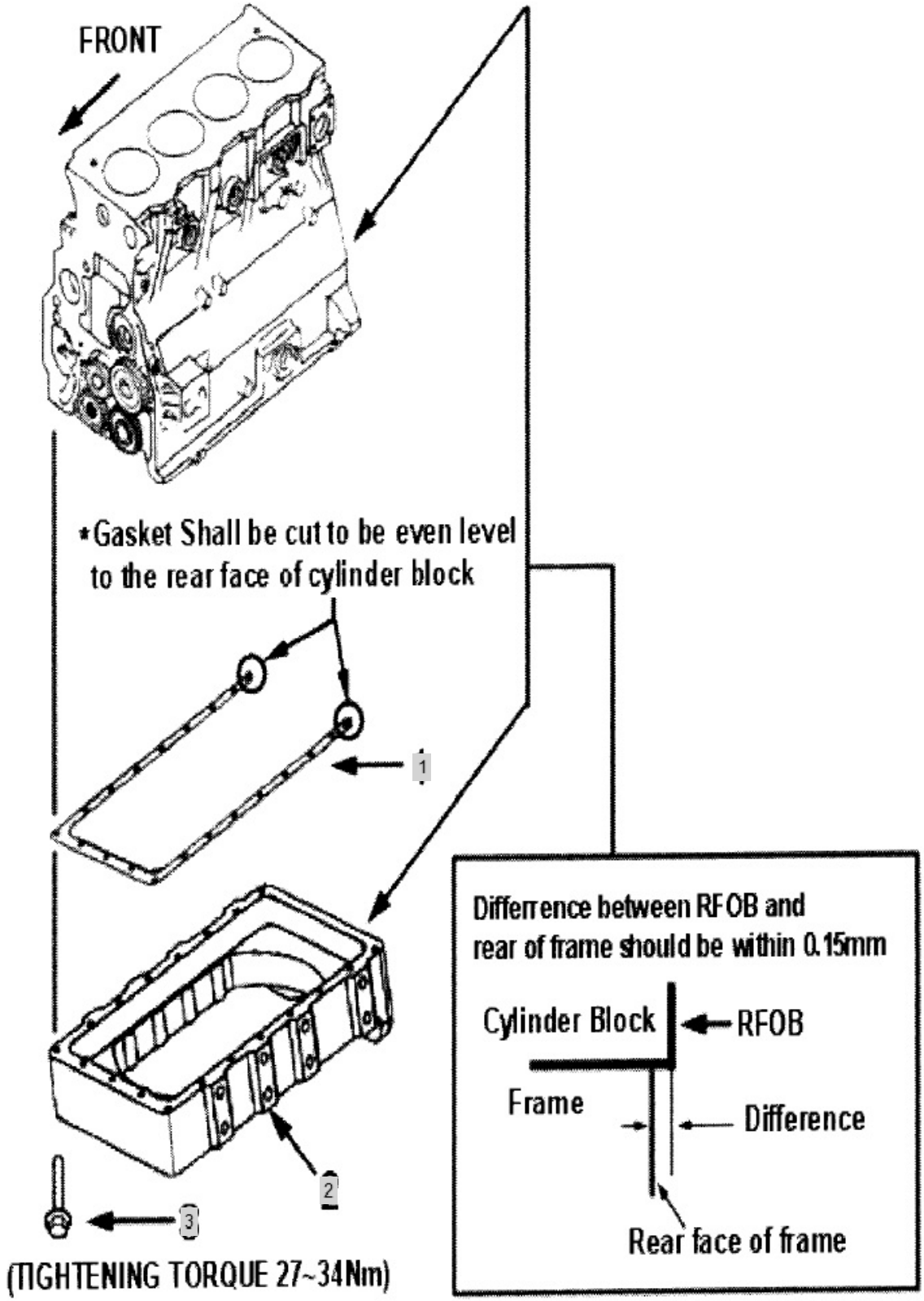

FIG E032 BRANSON 6530C	FRAME	Year/Month 2020/02

KeyNo.	Part Number	Part Name	Quantity	Other
1	C8853319223	GASKET -> C6204215790	1	
2	C6204245690	FRAME	1	
3	C0143500890	SCREW	19	

FIG E033 BRANSON 6530C	OIL PAN	Year/Month 2020/02

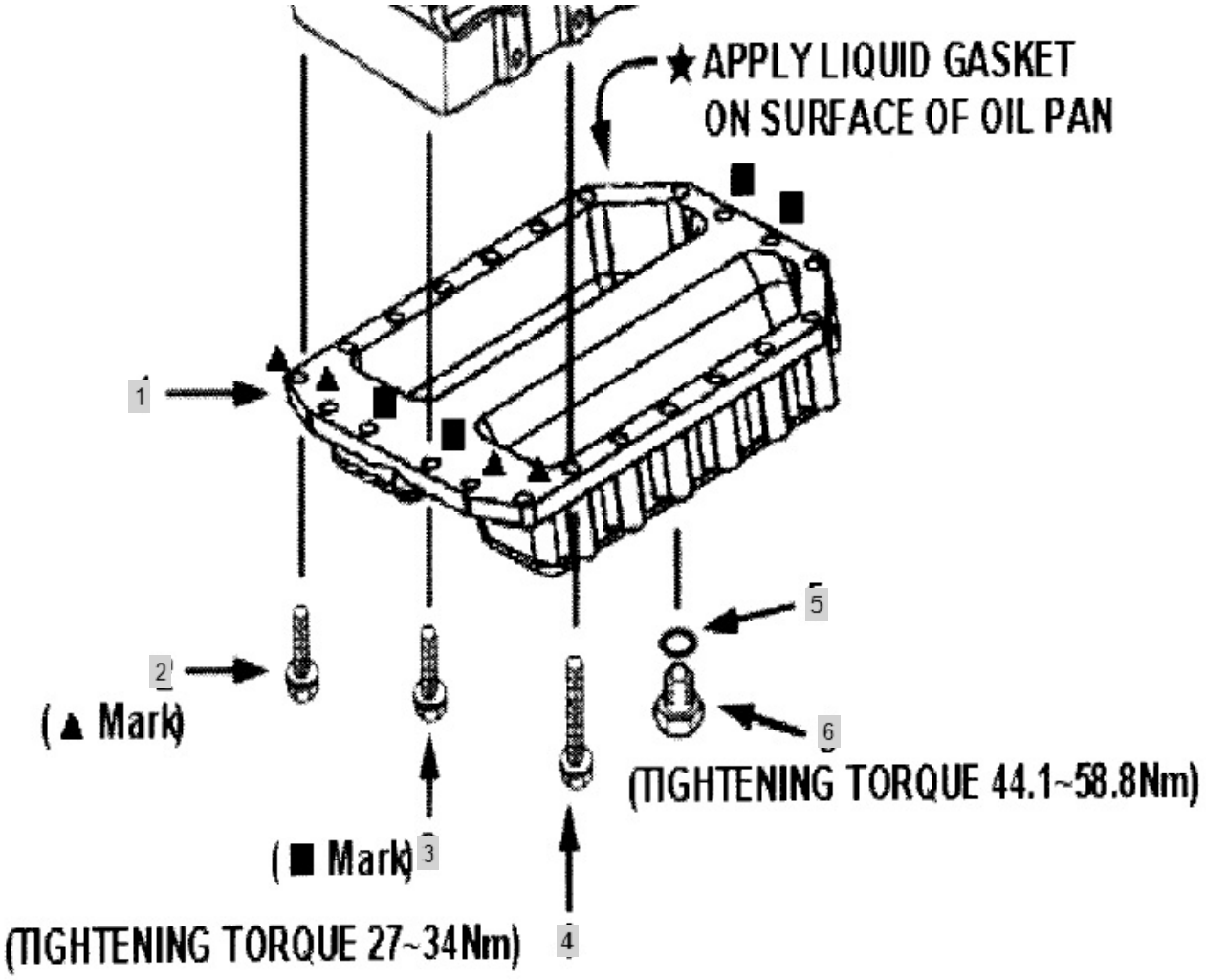

FIG E033 BRANSON 6530C	OIL PAN	Year/Month 2020/02

KeyNo.	Part Number	Part Name	Quantity	Other
1	C6204215620	Oil Pan B3.3	1	
2	C0143500830	SCREW	4	
3	C0143500825	SCREW	4	
4	C0143500805	SCREW	14	
5	C0700502216	Washer -> 309384400	2	
6	C6204215180	Threaded Plug	2	

FIG E034 BRANSON 6530C	PLATE	Year/Month 2020/02

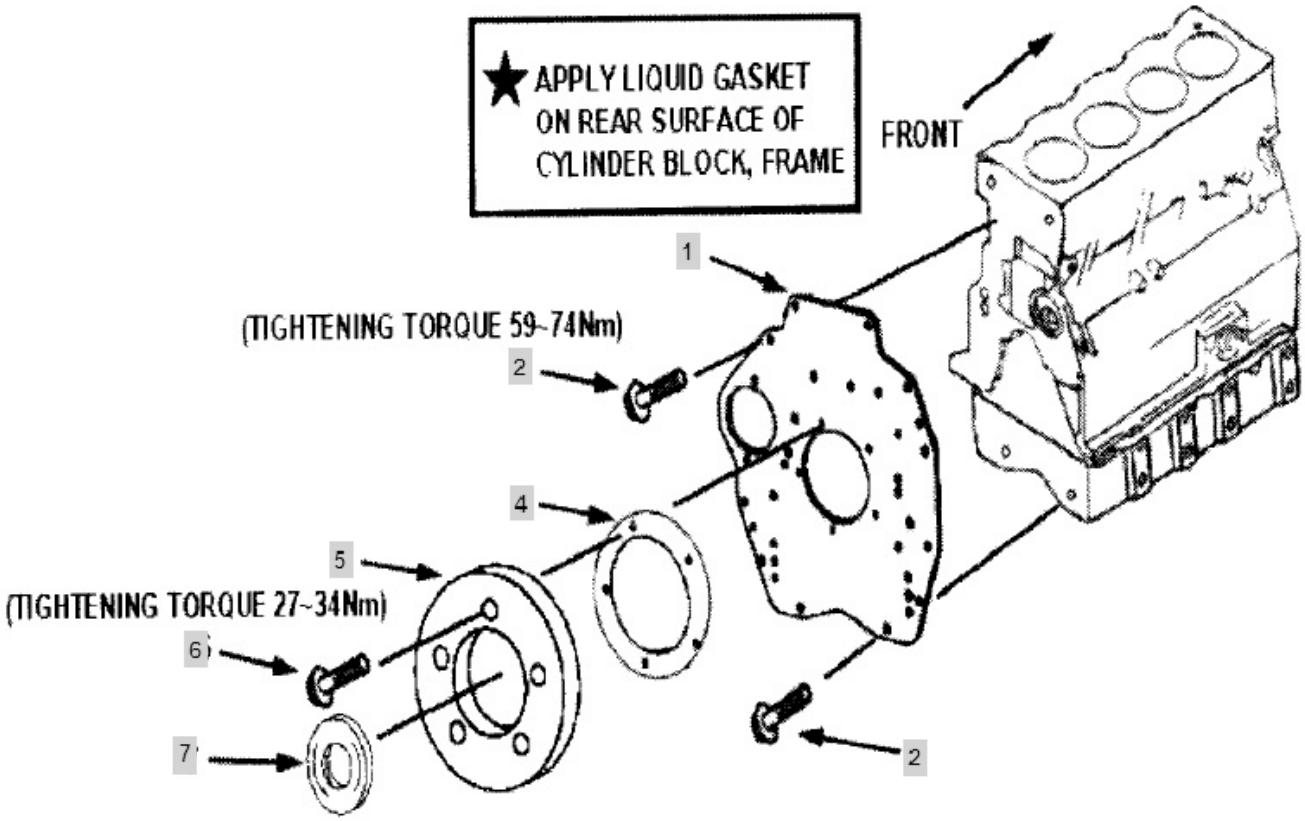

FIG E034 BRANSON 6530C	PLATE	Year/Month 2020/02

KeyNo.	Part Number	Part Name	Quantity	Other
1	C6204214330	PLATE	1	
2	C0143501025	SCREW	17	
4	C8853319224	SUB TO-> C6204214380	1	
5	C6204214390	HOLDER	1	
6	C0143500825	SCREW	5	
7	C6140211341	OIL SEAL	1	

FIG S001 BRANSON 6530C	STAY, COLUMN	Year/Month 2020/02

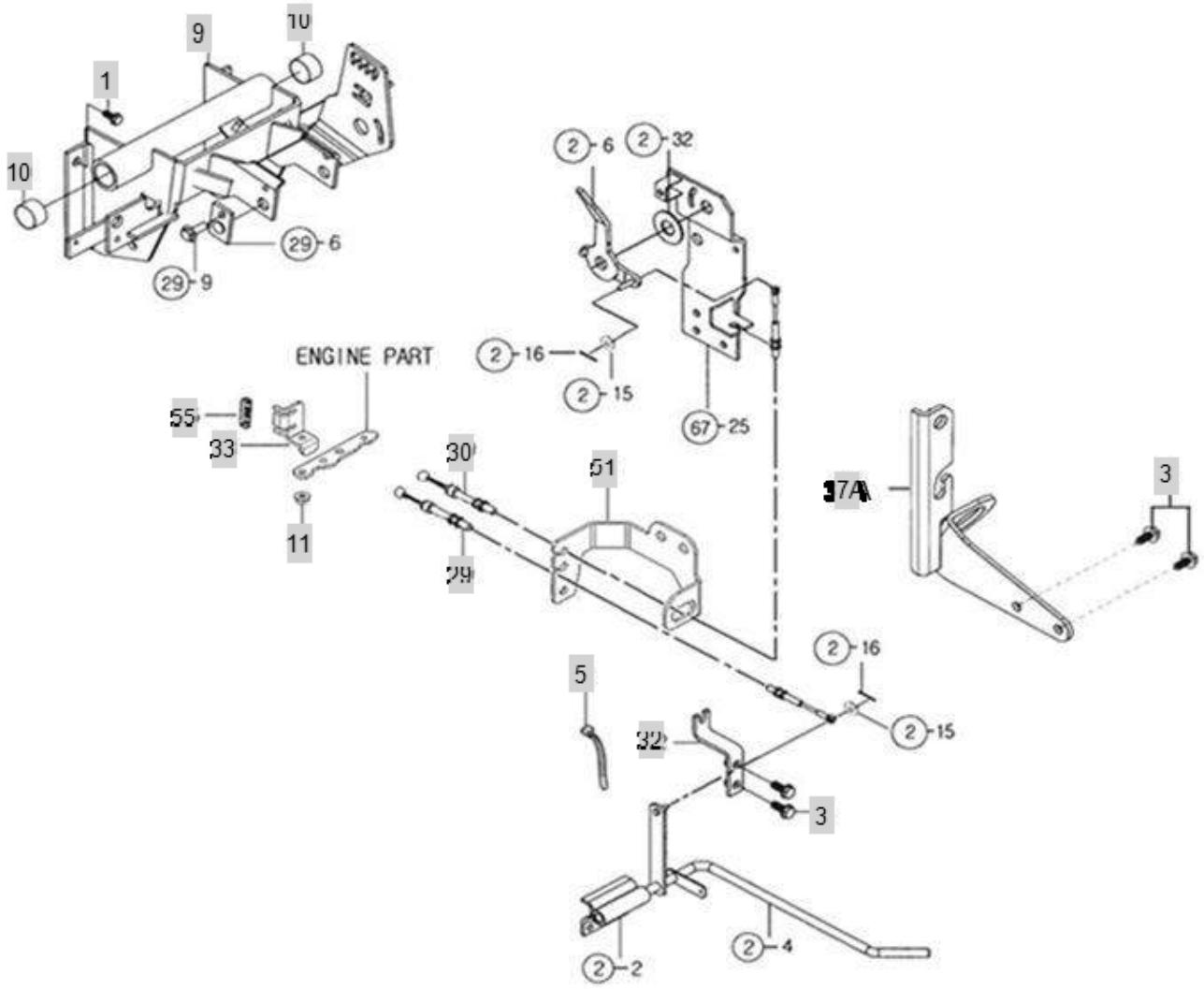

FIG S001 BRANSON 6530C	STAY, COLUMN	Year/Month 2020/02

KeyNo.	Part Number	Part Name	Quantity	Other
1	26106-100202	HEX BOLT, (10-20)	2	
3	26106-080162	SCREW,HEXFLANGEHEADCAP	4	
5	TTB9390000A4	BAND	1	
9	FT 1090000	STAY ASS'Y, COLUMN	1	
10	TC73010200A4	BUSH25*28*20	2	
11	26367-060002	Nut, Hexa (Φ6)	1	
29	FB01290000A3	ACCELERALTOR WIRE (PEDAL)	1	
30	FB01300000A3	ACCELERATOR WIRE (LEVER)	1	
32	FT01320000B4	BRACKET B, WIRE	1	
33	FB01330000A3	REGULATION (ACCELERATOR)	1	
37A	FB01370000A2	BRACKET COUPLING	1	
51	FB01510000A2	BRACKET, ACCLERATOR WIRE	1	
55	TN01510000A4	RUBBERCLAMP	1	

FIG S002 BRANSON 6530C	PEDAL, ACCELERATION	Year/Month 2020/02

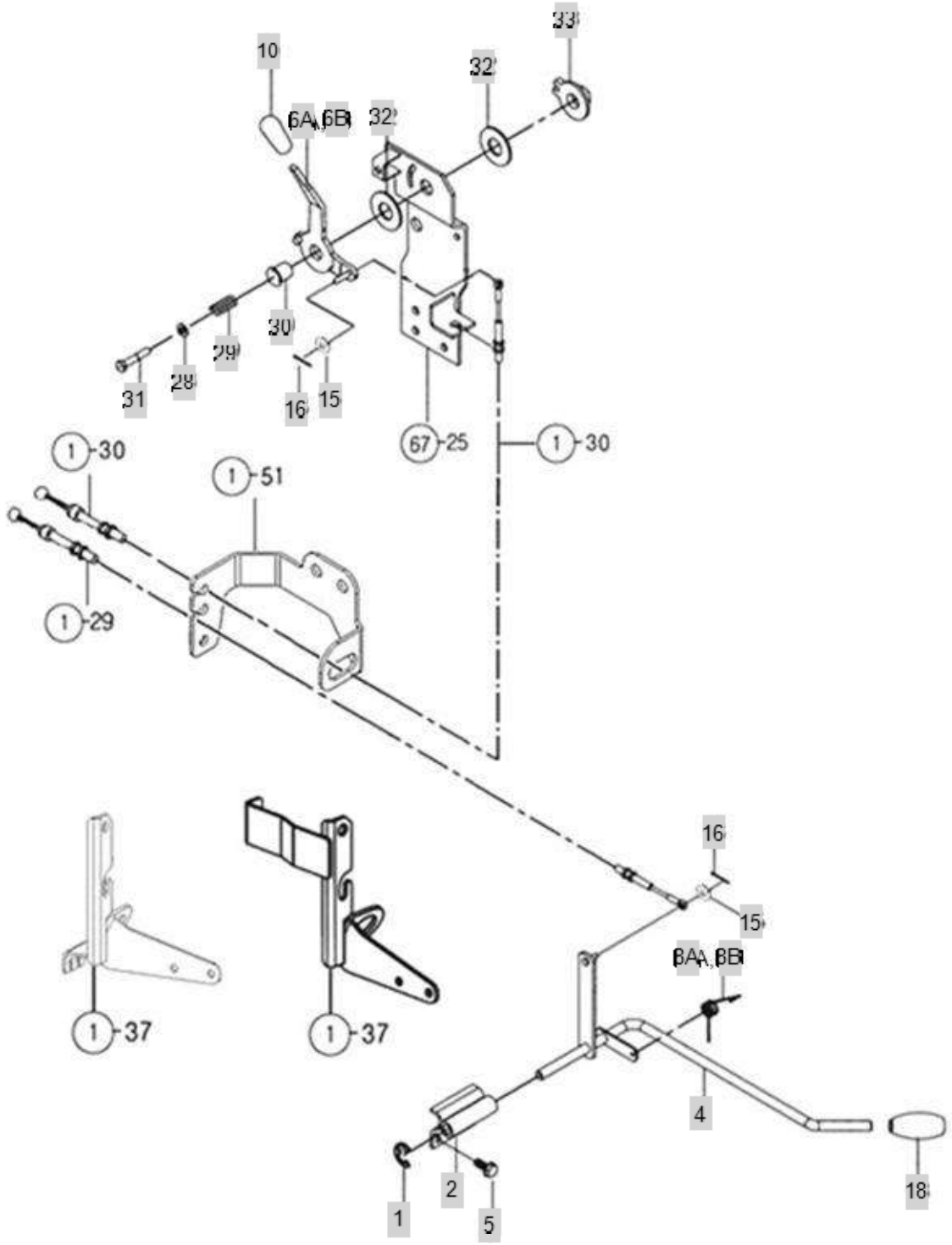

FIG S002 BRANSON 6530C	PEDAL, ACCELERATION	Year/Month 2020/02

KeyNo.	Part Number	Part Name	Quantity	Other
1	22272-000100	RING, CIRCLIP (Φ 10)	1	
2	FT02020000B3	BRACKET, ACCELERATOR HINGE	1	
4	FT02040000C2	LINK, ACCELERATOR	1	
5	26106-080162	SCREW,HEXFLANGEHEADCAP	2	
6A	FB02060000B3	ACCEL LEVER	1	
6B	FB02060000A3	ACCEL LEVER	1	
8A	FT02080000A4	SPRING	1	
8B	FT02080000A4	SPRING	1	
10	TA00015801B	KNOB, ACCELERATOR	1	
15	22137-060000	WASHER , PLAIN	2	
16	22417-200200	PIN , COTTER (2-20)	2	
18	FT02180000A4	FEADL FLOWER	1	
28	22137-080000	WASHER, PLAIN (Φ 08)	1	
29	THB5129000A4	SPRING	1	
30	THB5130000B4		1	
31	26116-080454	BOLT	1	
32	THB5132000A4	Friction Plate	2	
33	THB5133000A4	PLATE	1	

FIG S005-2 BRANSON 6530C	FUEL TANK (6530)	Year/Month 2020/02

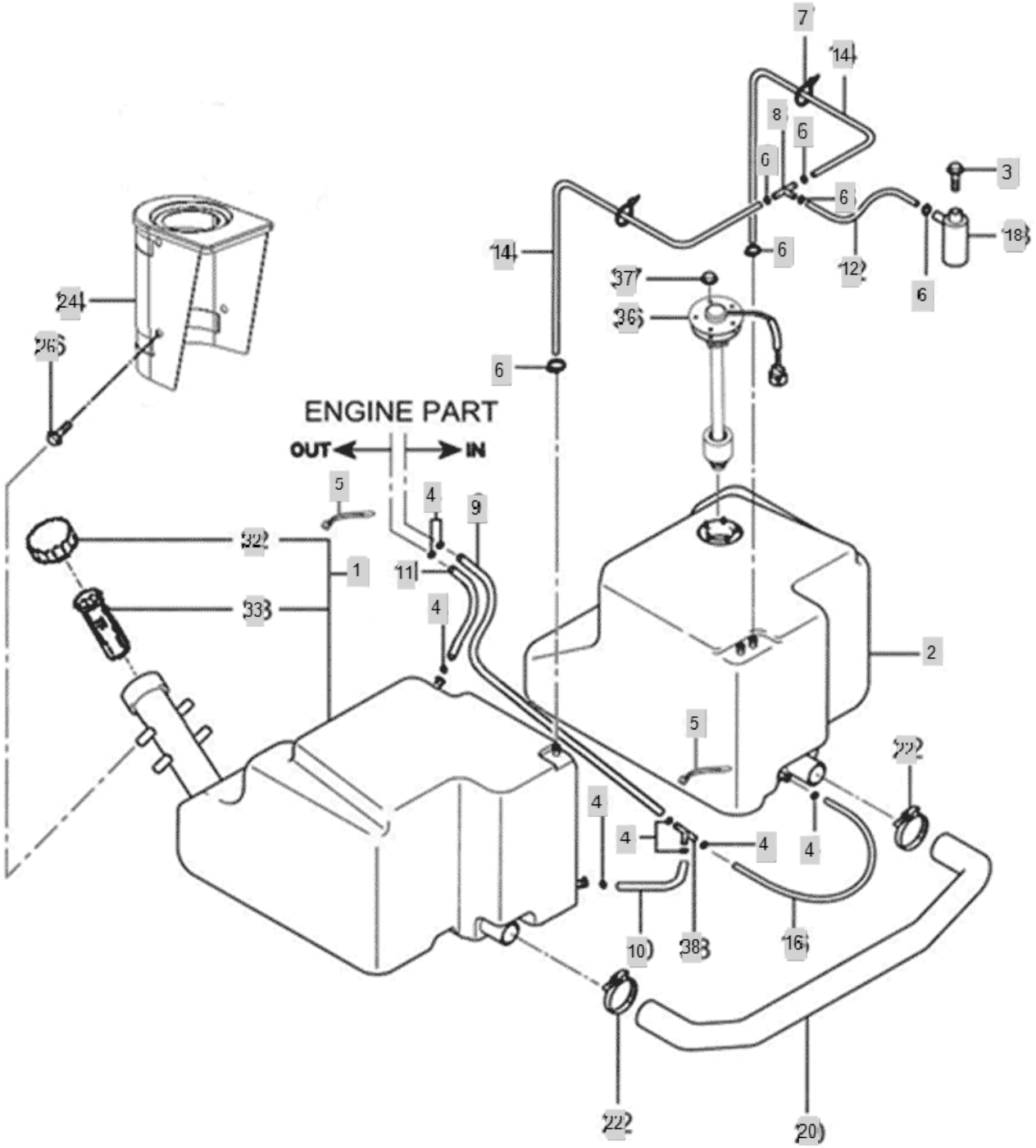

FIG S005-2 BRANSON 6530C	FUEL TANK (6530)	Year/Month 2020/02

KeyNo.	Part Number	Part Name	Quantity	Other
1	FB05010000B0	FUEL TANK ASSY (LH)	1	
2	FB05020000B0	FUEL TANK ASSY (RH)	1	
3	26106-080122	Bolt, Hexa (8-12)	1	
4	23000-016000	Clip, Hose (Φ16)	8	
5	TTB9420000A4	Band, Wire (250mm)	2	
6	23000-013000	Clip, Hose (Φ13)	5	
7	TB39260000A4	BAND	2	
8	TC51080000A4	T-JOINT	1	
9	FB05090000A4	FUEL HOSE A	1	
10	FB05100000A4	FUEL HOSE D	1	
11	FB05110000A4	FUEL HOSE C	1	
12	23980-731250	FLOAT HOSE	1	
14	23980-730350	HOSE	2	
16	FB05160000A4	FUEL HOSE B	1	
18	TB43640000A4	AIRBREEDERASS'Y	1	
20	FT05200000B3	HOSE(FUEL TANK)	1	
22	23000-048000	CLAMP,HOSE	2	
24	FB05240000B3	COVER ASS'Y	1	
26	26106-080122	Bolt, Hexa (8-12)	4	
32	NTE1170000A3	CAP,FUELTANK	1	
33	TNE11800A0A9	STRAINERFUEL	1	
36	FBD4280000A2	FUEL SENSOR	1	
37	26367-050002	HEX FLANGE NUT Φ5)	5	
38	FB05380000A3	T-JOINT	1	

FIG S006 BRANSON 6530C	BRACKET, FUEL TANK	Year/Month 2020/02

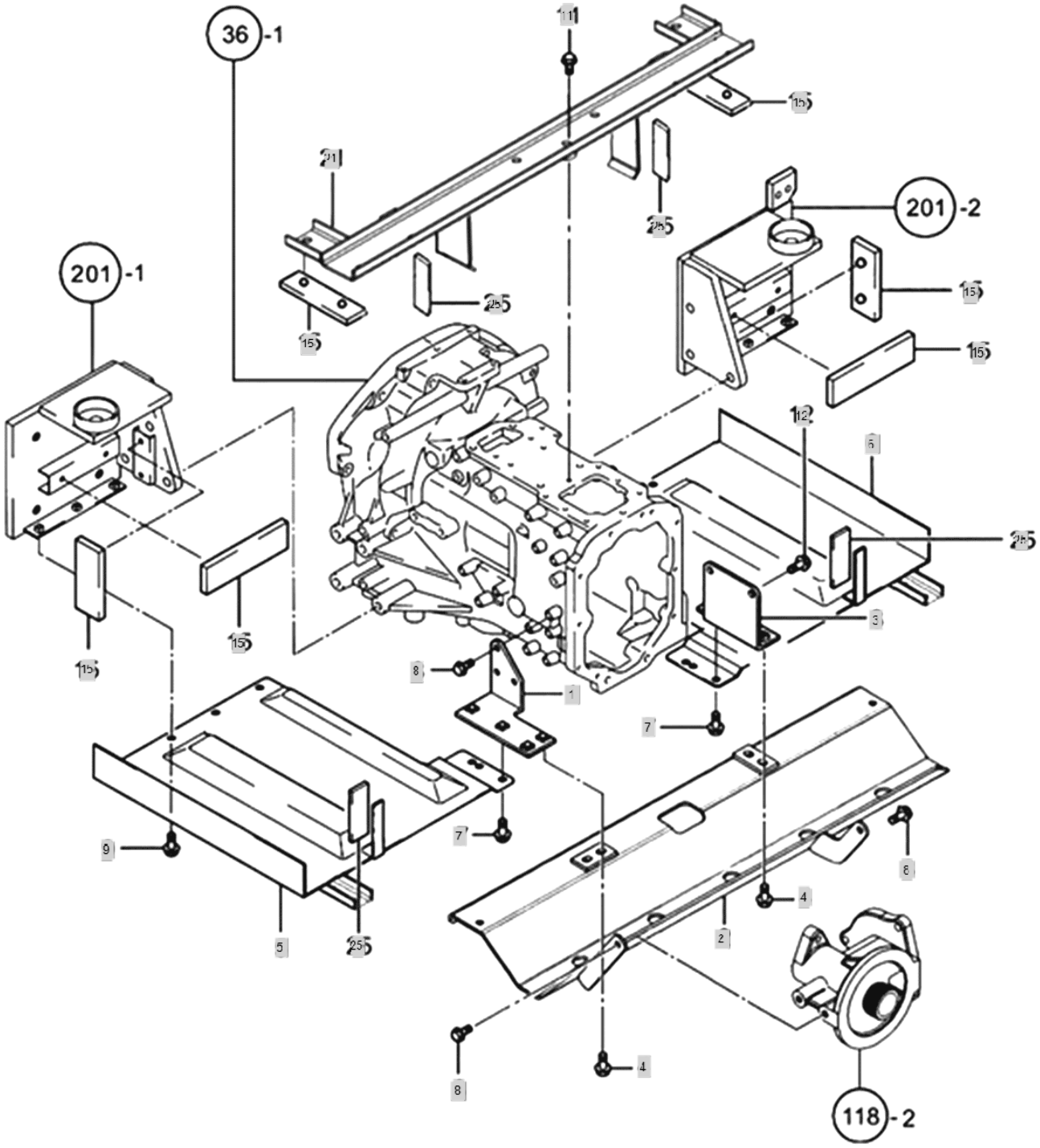

FIG S006 BRANSON 6530C	BRACKET, FUEL TANK	Year/Month 2020/02

KeyNo.	Part Number	Part Name	Quantity	Other
1	FT06010000A3	SUPPORT BRACKET(L),FUEL TANK	1	
2	FT06020000D1	GUARD COVER	1	
3	FT06030000A3	SUPPORT BRACKET(R), FUEL TANK	1	
4	26106-100302	HEXFLANGEBOLT	4	
5	FT06050000D2	TANK LOWER BRACKET ASSY(L)	1	
6	FT06060000D2	TANK LOWER BRACKET ASSY(R)	1	
7	26106-100202	HEX BOLT, (10-20)	4	
8	26106-080162	SCREW,HEXFLANGEHEADCAP	5	
9	26106-100202	HEX BOLT, (10-20)	6	
11	26106-080302	HEX BOLT, FLANGE	3	
12	26106-100122	HEXFLANGEBOLT	2	
15	TND9210000A4	FOOTRESTRUBBER,DUSTPROOF	6	
21	FB06210000A1	TANK BRACKET-UP	1	
25	FT06250000B4	TANK BRACKET PAD	4	

FIG S008 BRANSON 6530C	FRONT AXLE BRACKET	Year/Month 2020/02

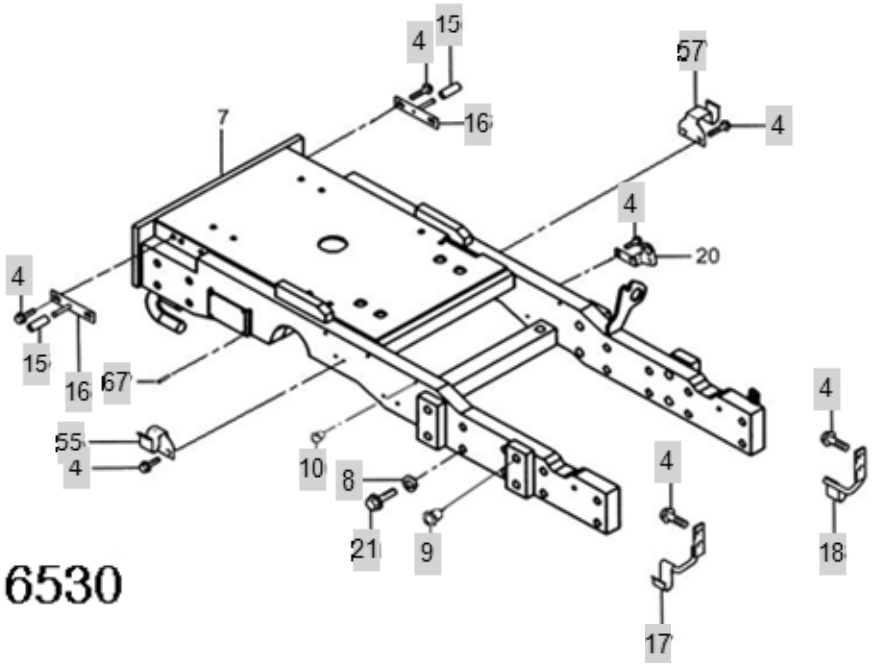

FIG S008 BRANSON 6530C	FRONT AXLE BRACKET	Year/Month 2020/02

KeyNo.	Part Number	Part Name	Quantity	Other
4	26106-080162	SCREW,HEXFLANGEHEADCAP	14	
5	FL08050000A4	CONNECTING BOLT	1	
6	FL08060000A3	COUPLING BRACKET	1	
7B	FB08070000A0	Ass'y Front Axel Bracket	1	
8	22217-140000	WASHER, SPRING (Φ 14)	16	
9	FB08090000A4	PLUG	20	
10	TB26060000A4	PLUGRUBBER	10	
11	22217-080000	WASHER, SPRING (Φ 08)	1	
15	TC53130000A4	CUSHION, RUBBER	2	
16	FT08160000A4	STAY,LOWER	2	
17	FT08170000A3	STAY L, LOWER	1	
18	FT08180000A3	SIDE STAY R	1	
21	TT09190000A4	BOLT	16	
55	FT08550000A4	HITCH L, SIDE COVER	1	
57	FT08570000A4	HITCH R, SIDE COVER	1	
67	22685-320601	RIVET	4	

FIG S009 BRANSON 6530C	FRONT SUPPORT	Year/Month 2020/02

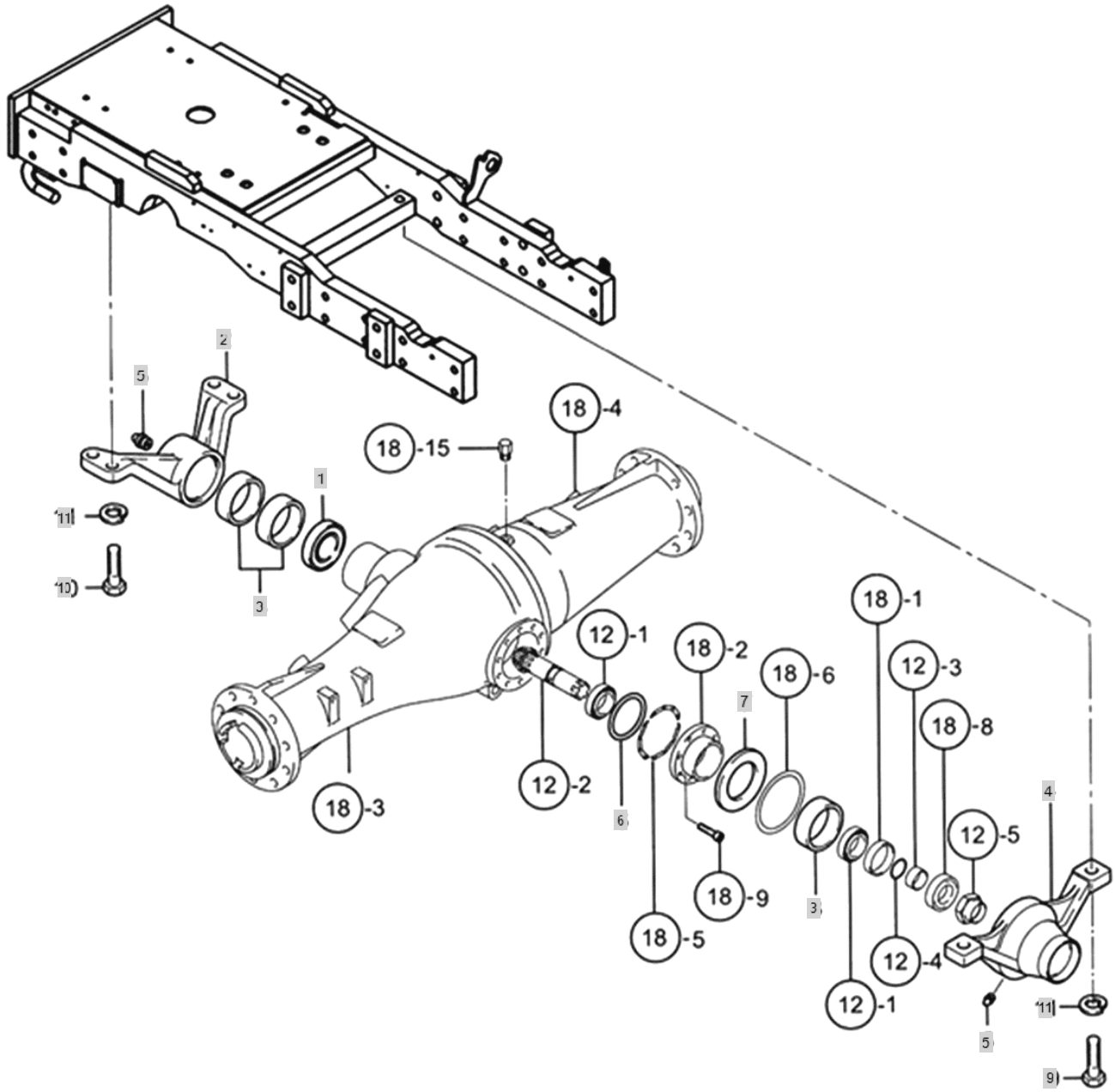

FIG S009 BRANSON 6530C	FRONT SUPPORT	Year/Month 2020/02

KeyNo.	Part Number	Part Name	Quantity	Other
1	TT09010000A3	OILSEAL	1	
2	FT09020000A1	SUPPORT F	1	
3	TT09030000A3	BUSH	3	
4	FB09040000A1	SUPPORT R	1	
5	24764-060000	GREASE NIPPLE	2	
6	24321-000700	O-RING1AG-70	1	
7	TT09130000A4	THRUSTWASHER	1	
9	TT09090000A4	Bolt	2	
10	FT09090000A4	BOLT	4	
11	TT09110000A4	LOCKSPRINGWASHER	6	

FIG S012 BRANSON 6530C	RING GEAR	Year/Month 2020/02

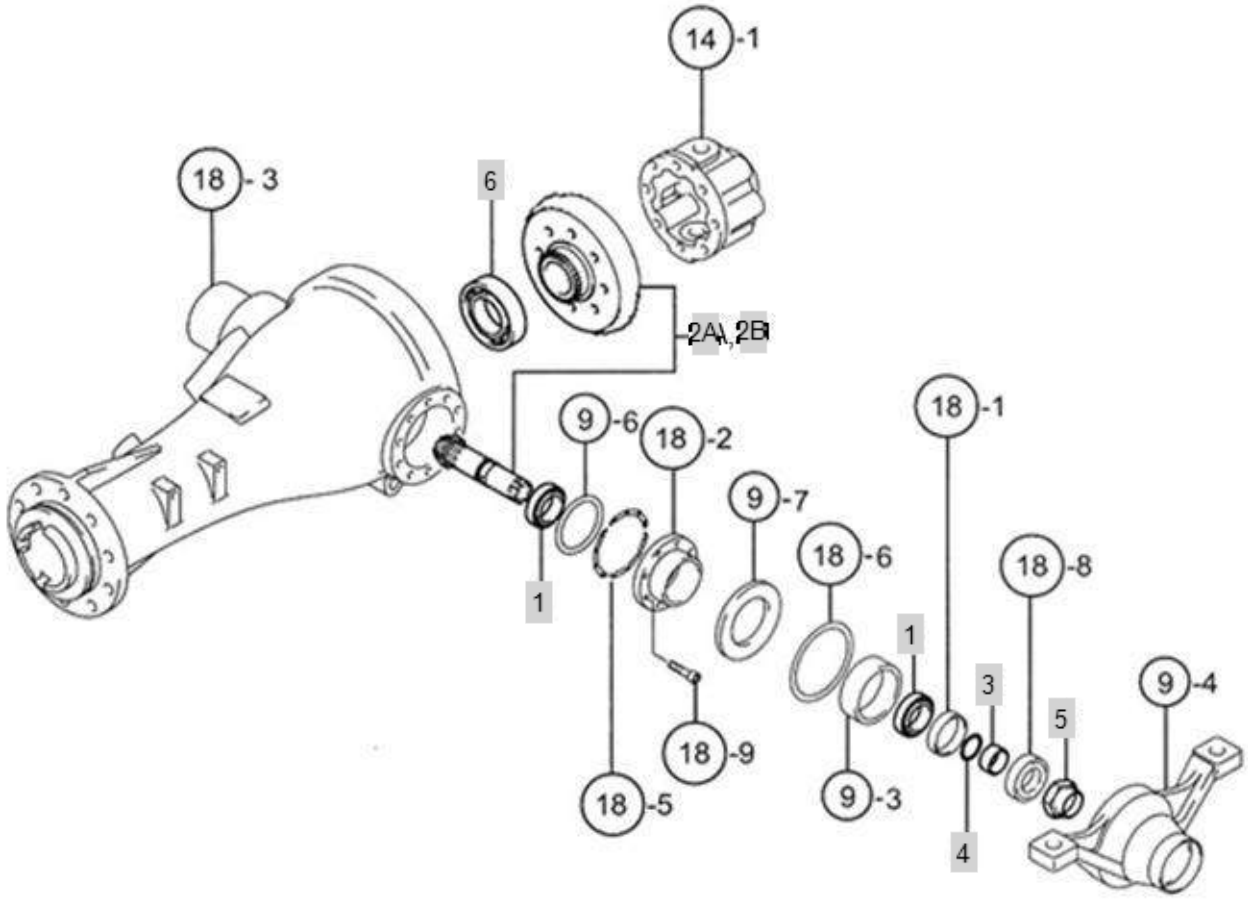

FIG S012 BRANSON 6530C	RING GEAR	Year/Month 2020/02

KeyNo.	Part Number	Part Name	Quantity	Other
1	TB19080000A4	BEARING,TAPERROLLER	2	
2A	TA00018136A	RING GEAR ASS'Y	1	
2B	TA00018136A	RING GEAR ASS'Y	1	
3	FT12060000A4	SEAL COLLAR	1	
4	24311-000290	O-RING, DYNAMIC (Φ29)	1	
5	FT12050000B4	HEX NUT	1	
6	24101-060124	Bearing, Ball (#6012)	1	

FIG S013 BRANSON 6530C	POWER STEERING CYLINDER	Year/Month 2020/02

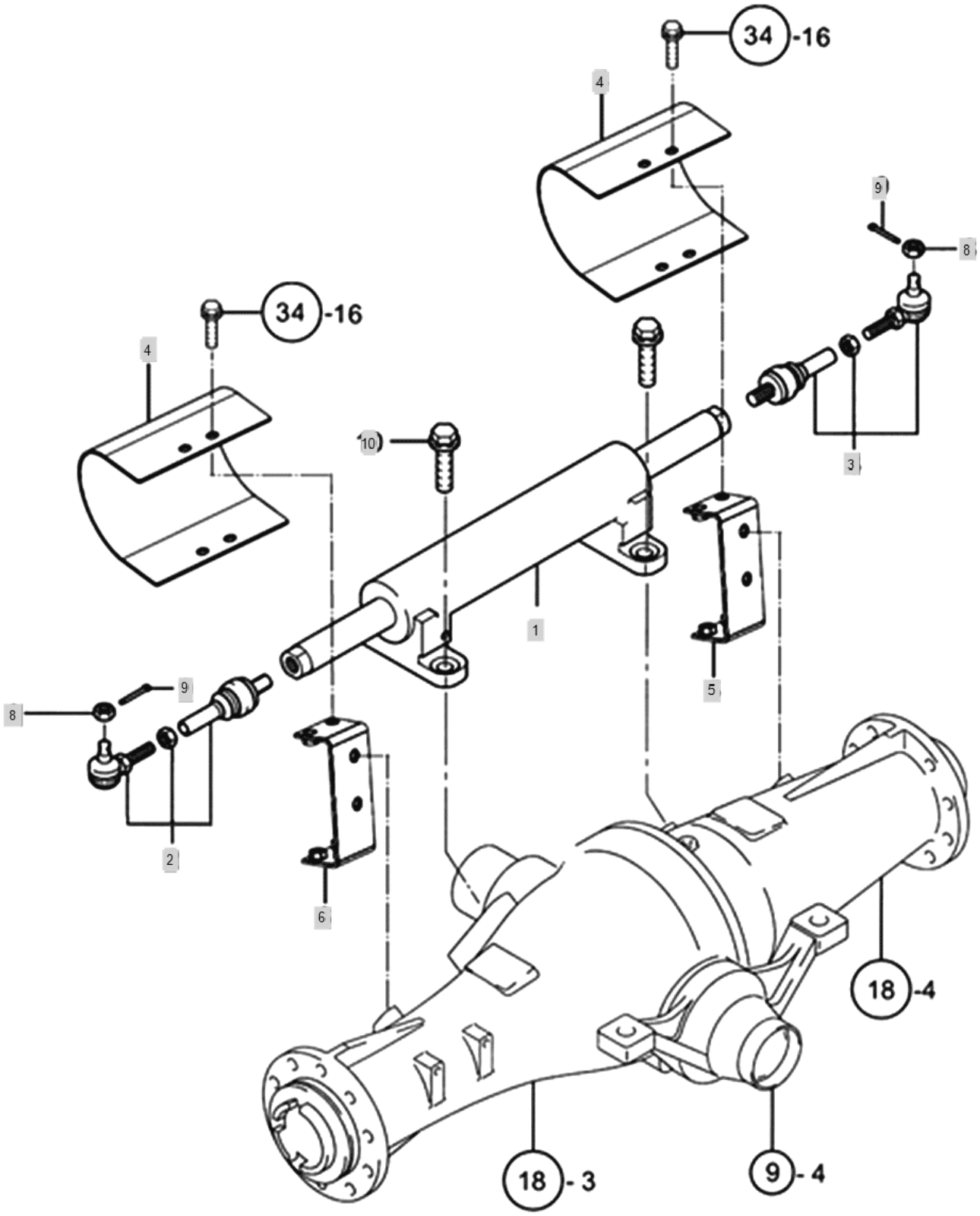

FIG S013 BRANSON 6530C	POWER STEERING CYLINDER	Year/Month 2020/02

KeyNo.	Part Number	Part Name	Quantity	Other
1	FT13010000C2	PST CYLINDER ASSY	1	
2	FT13020000C3	TIEROD ASSY(L)	1	
3	FT13030000C3	TIDROD ASSY(R)	1	
4	FB13040000A3	COVER, PST-CYLINDER	2	
5	FB13050000A4	COVER BRACKET ASS'Y	1	
6	FB13060000A4	COVER BRACKET ASS'Y	1	
8	26877-180002	NUT(SCREW)	2	
9	22417-400500	PIN , COTTER (4-50)	2	
10	26013-120352	SCREW,CAPTIVEWASHERCAP	4	

FIG S014 BRANSON 6530C	DIFFERENTIAL GEAR	Year/Month 2020/02

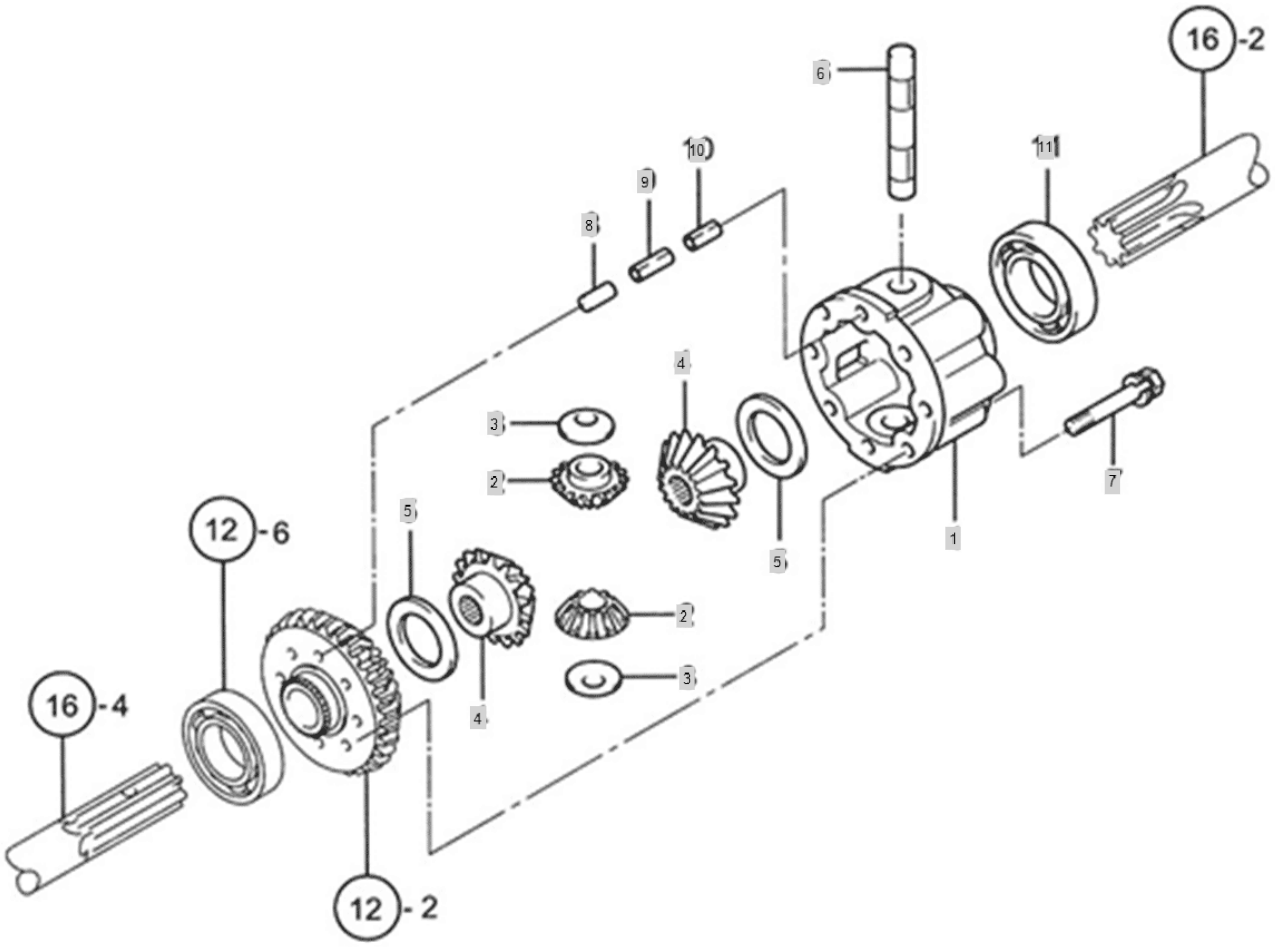

FIG S014 BRANSON 6530C	DIFFERENTIAL GEAR	Year/Month 2020/02

KeyNo.	Part Number	Part Name	Quantity	Other
1	TT14010000A3	Case, Differential Driving	1	
2	TD21140000A4	PINION,DIFFERENCIAL	2	
3	TT14030000A4	LINER	2	
4	TD21150000A3	BEVEL GEAR 10T, DIFF.CASE	2	
5	TD21170000A4	LINER, DIFF. CASE	2	
6	TT14060000A4	SHAFT,DIFF.PINION	1	
7	TD21230000A4	BOLT	6	
8	22312-100180	PIN, DOWEL (10-18)	2	
9	22351-035032	PIN, SPRING (3.5-32)	1	
10	22351-060032	PIN, SPRING (6-32)	1	
11	24101-060104	Bearing, Ball (#6010)	1	

FIG S015 BRANSON 6530C	PROPELLER SHAFT	Year/Month 2020/02

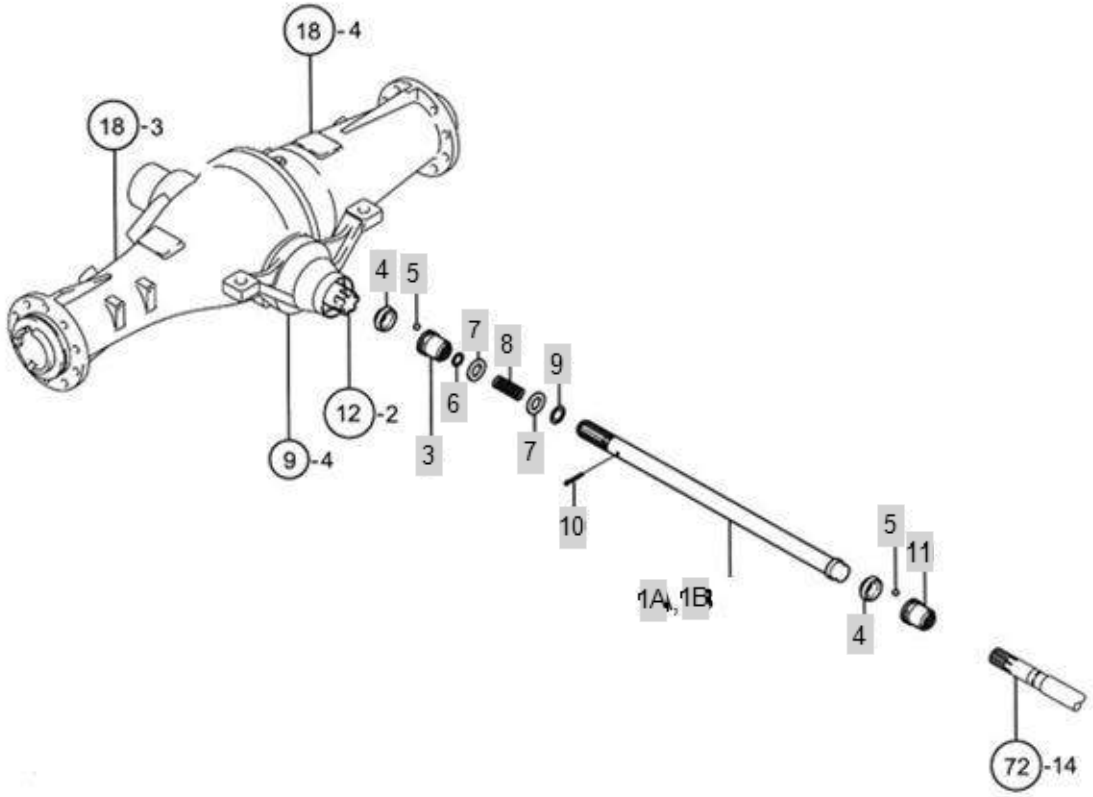

FIG S015 BRANSON 6530C	PROPELLER SHAFT	Year/Month 2020/02

KeyNo.	Part Number	Part Name	Quantity	Other
1A	TA00016902A	PROPELLER SHAFT ASS'Y	1	
1B	TA00016902A	PROPELLER SHAFT ASS'Y	1	
3	TT15020000A4	COUPLINGB.F	1	
4	TT15070000A4	BOOTS, DRIVE SHAFT	2	
5	24190-110001	Ball, Steel (11/32)	12	
6	TD21290000A4	SEAL,SPINESHAFT	1	
7	TD21270000A4	O-RING, FIX (Φ28)	2	
8	TT15100000A4	SPRING	1	
9	24311-000240	O-RING, DYNAMIC (Φ24)	1	
10	22417-300350	PIN , COTTER (3-35)	1	
11	TT15080000A4	COUPLINGREAR	1	

FIG S016 BRANSON 6530C	FRONT WHEEL DIFFERENTIAL	Year/Month 2020/02

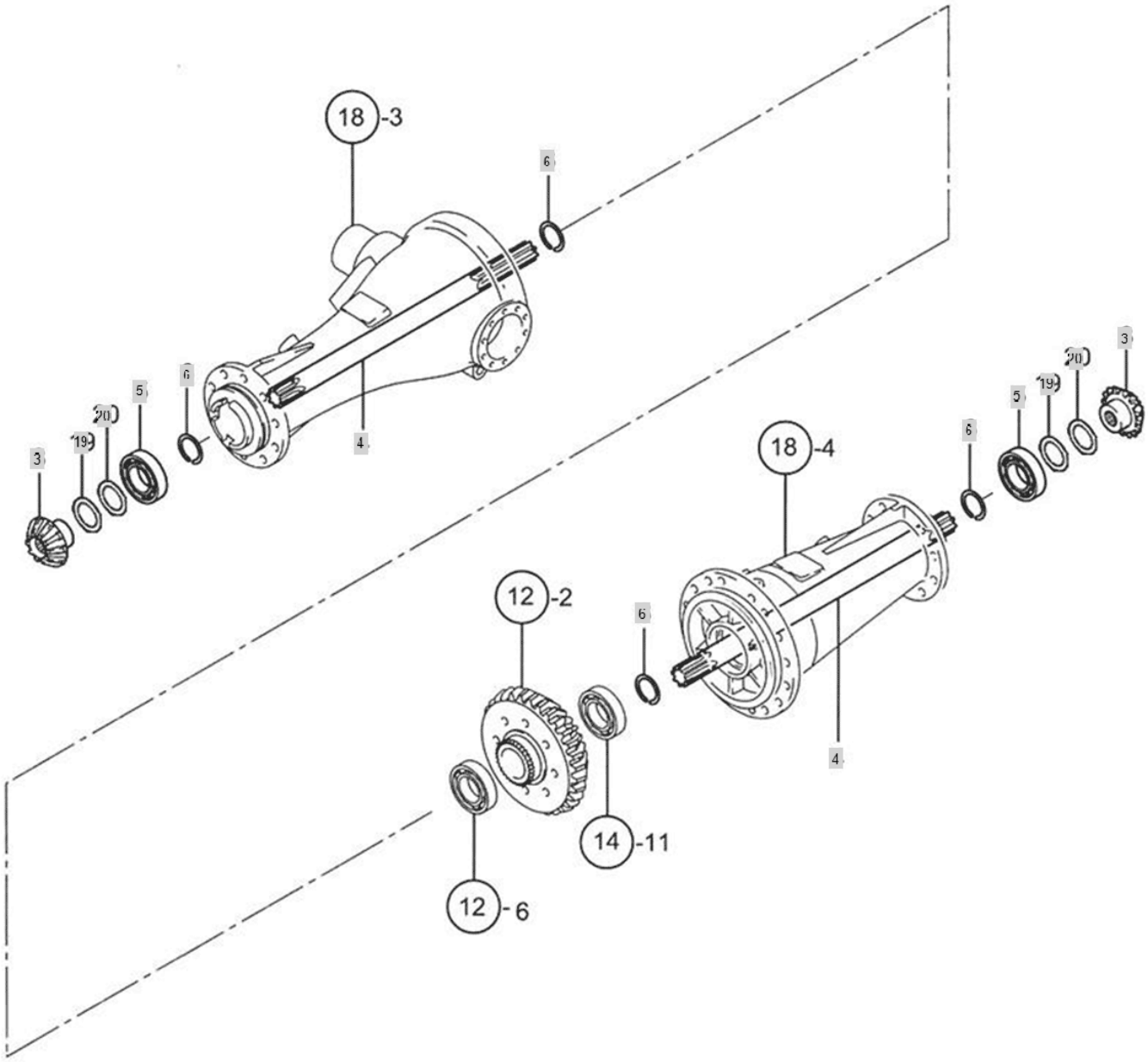

FIG S016 BRANSON 6530C	FRONT WHEEL DIFFERENTIAL	Year/Month 2020/02

KeyNo.	Part Number	Part Name	Quantity	Other
3	FB16030000B3	PINION	2	
4	FB16040000B3	FRONT FIRST SHAFT	2	
5	24101-062084	Bearing, Ball (#6208)	2	
6	22207-028230	SNAP RING	4	
19	FB16190000A4	SHIM(A)	2	
20	FB16200000A4	SHIM(B)	2	

FIG S018 BRANSON 6530C	CASE, FRONT AXLE	Year/Month 2020/02

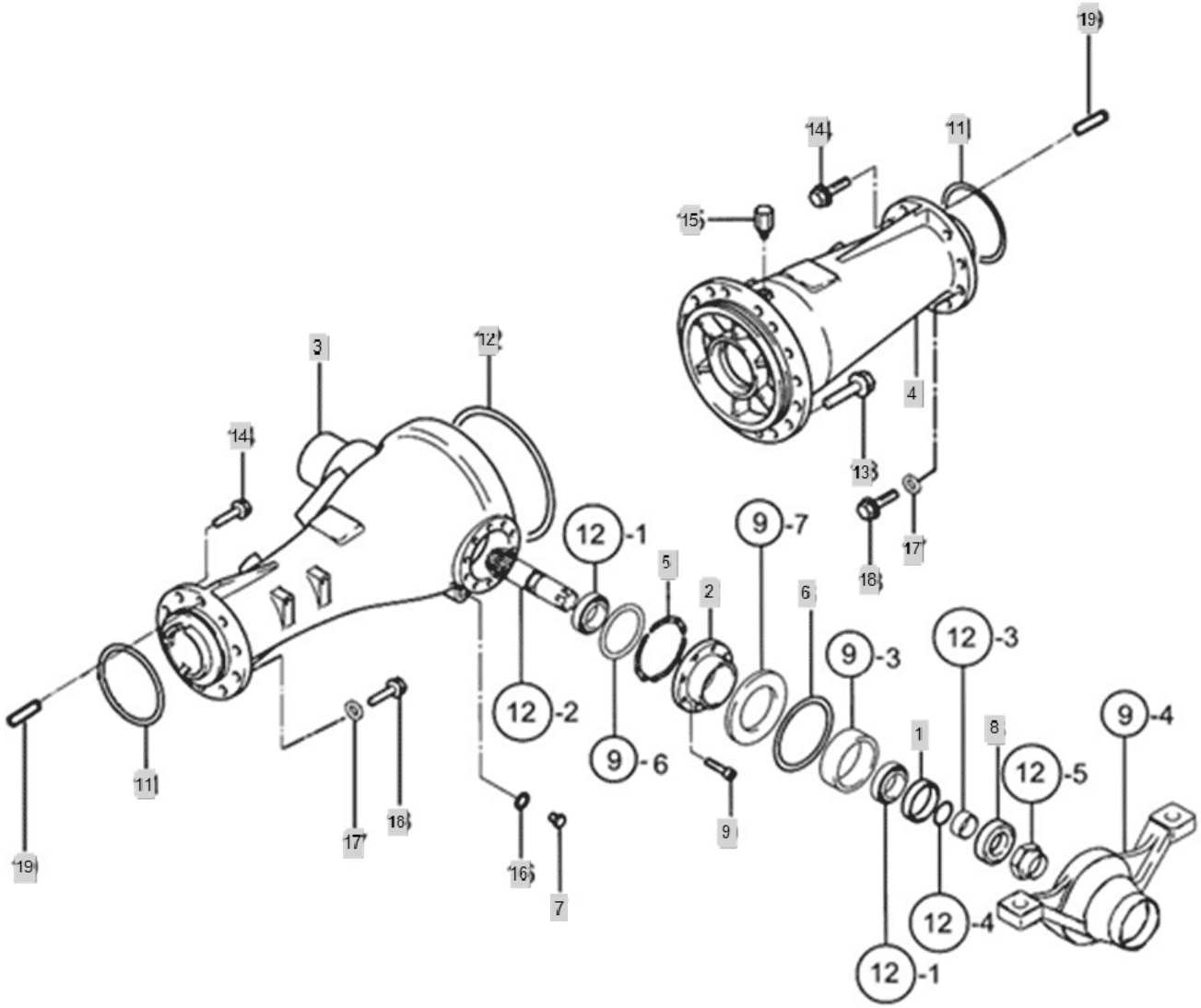

FIG S018 BRANSON 6530C	CASE, FRONT AXLE	Year/Month 2020/02

KeyNo.	Part Number	Part Name	Quantity	Other
1	TT18010000A4	SPACE62	1	
2	FT18020000A3	RETAINER,BEARING	1	
3	FT18030000C0	FRONT AXLE CASE L	1	
4	FT18040000C0	FRONT AXLE CASE R	1	
5	FT18050000A4	SHIM	6	
6	24321-001150	O-RING(G115)	1	
7	23491-140002	PLUG, DRAIN -> 23490-140002	1	
8	24421-456209	OILSEAL(TCTYPE)	1	
9	26450-080202	HEXAGONSOCKETCAPBOLT	10	
11	24321-001050	O-RING	2	
12	24321-001800	O-RING	1	
13	26013-120352	SCREW,CAPTIVEWASHERCAP	16	
14	26013-120352	SCREW,CAPTIVEWASHERCAP	16	
15	TD20350000A4	AIRBREEDER	1	
16	24311-000160	O-RING, DYNAMIC (Φ16)	1	
17	TT08220000A4	LOCKSPRINGWASHER	4	
18	NT18240000A4	BOLT M12x35	4	
19	22312-100200	PIN, DOWEL (10-20)	4	

FIG S019 BRANSON 6530C	CASE, FRONT WHEEL GEAR	Year/Month 2020/02

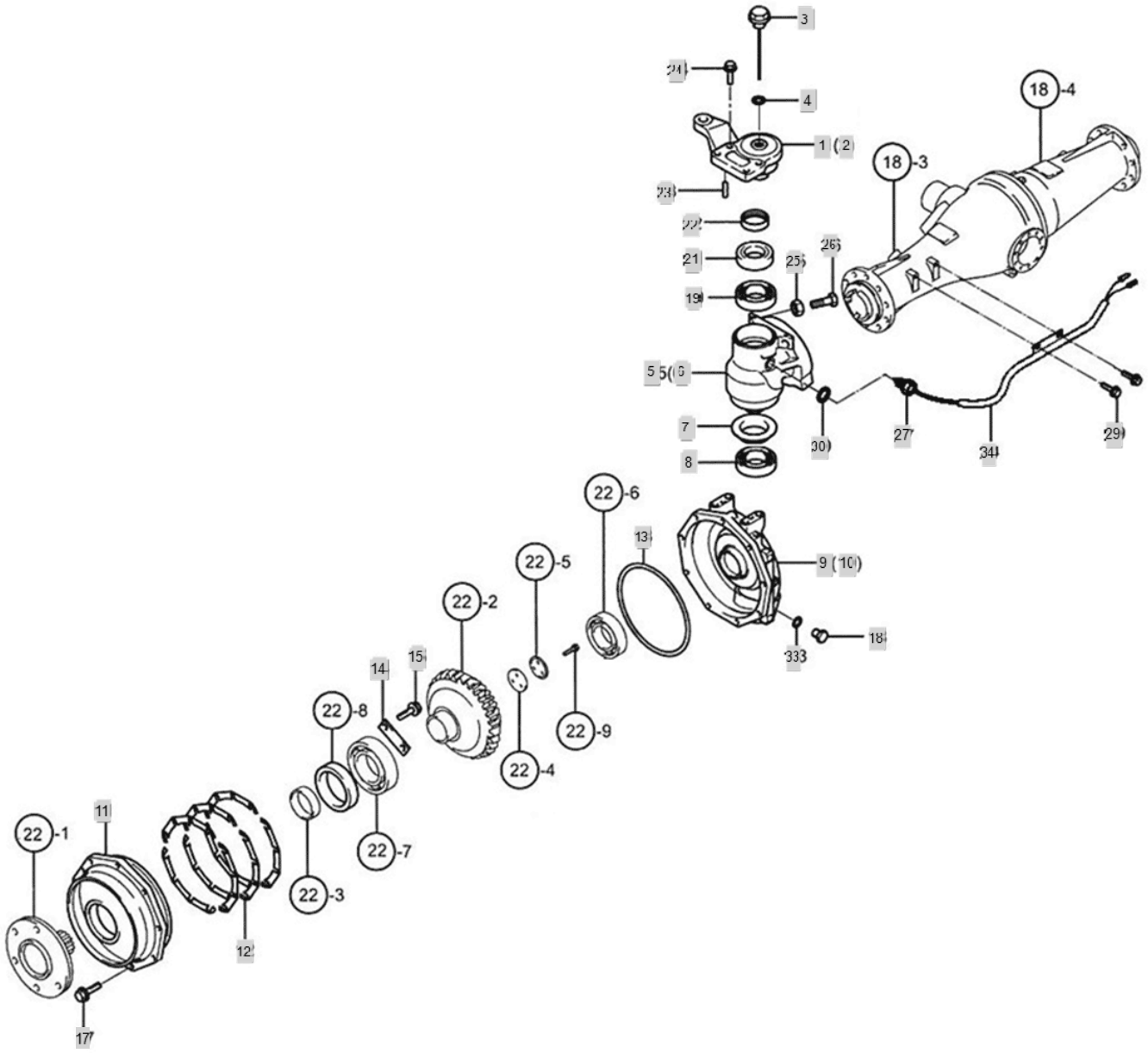

FIG S019 BRANSON 6530C	CASE, FRONT WHEEL GEAR	Year/Month 2020/02

KeyNo.	Part Number	Part Name	Quantity	Other
1	FT19010000A1	KNUCKLE ARM, L	1	
2	FT19020000A1	KNUCKLE ARM, R	1	
3	TT19030000A3	PLUG	2	
4	24311-000220	O-RING, DYNAMIC (Φ22)	2	
5	FB19050000A0	FRONT GEAR CASE (LEFT)	1	
6	FB19060000A0	FRONT GEAR CASE(R)	1	
7	TT19100000A3	SEAL55X85	2	
8	24101-062094	BALL BEARING (#6209)	2	
9	FB19090000A0	FRONT GEAR HOUSING(L)	1	
10	FB19100000A0	FRONT GEAR HOUSING(R)	1	
11	FB19110000A1	FRONT BEARING COVER	2	
12	FT19080000A4	SHIM 3	12	
13	24321-002300	O-RING(GTYPE)	2	
14	FT19140000A4	SUPPORT, BEARING	8	
15	26013-080202	Bolt, Hexa (8-20)	16	
17	26013-100302	SCREW,CAPTIVEWASHERCAP	24	
18	23491-140002	PLUG, DRAIN -> 23490-140002	2	
19	24101-062094	BALL BEARING (#6209)	2	
21	TT19130000A3	OIL SEAL	2	
22	TT19120000A3	SISLEEVE	2	
23	22312-100200	PIN, DOWEL (10-20)	4	
24	26013-120402	Bolt, Hexa (12-40)	8	
25	26716-160002	NUT	2	
26	26116-160454	HEZ BOLT	2	
27	FT19270000A3		1	
29	26106-080122	Bolt, Hexa (8-12)	2	
30	24311-000200	O-RING, DYNAMIC (Φ20)	1	
33	24311-000160	O-RING, DYNAMIC (Φ16)	2	
34	FT19340000B3	TURN-UPSENSEPIPE	1	

FIG S021 BRANSON 6530C	FRONT SECOND SHAFT	Year/Month 2020/02

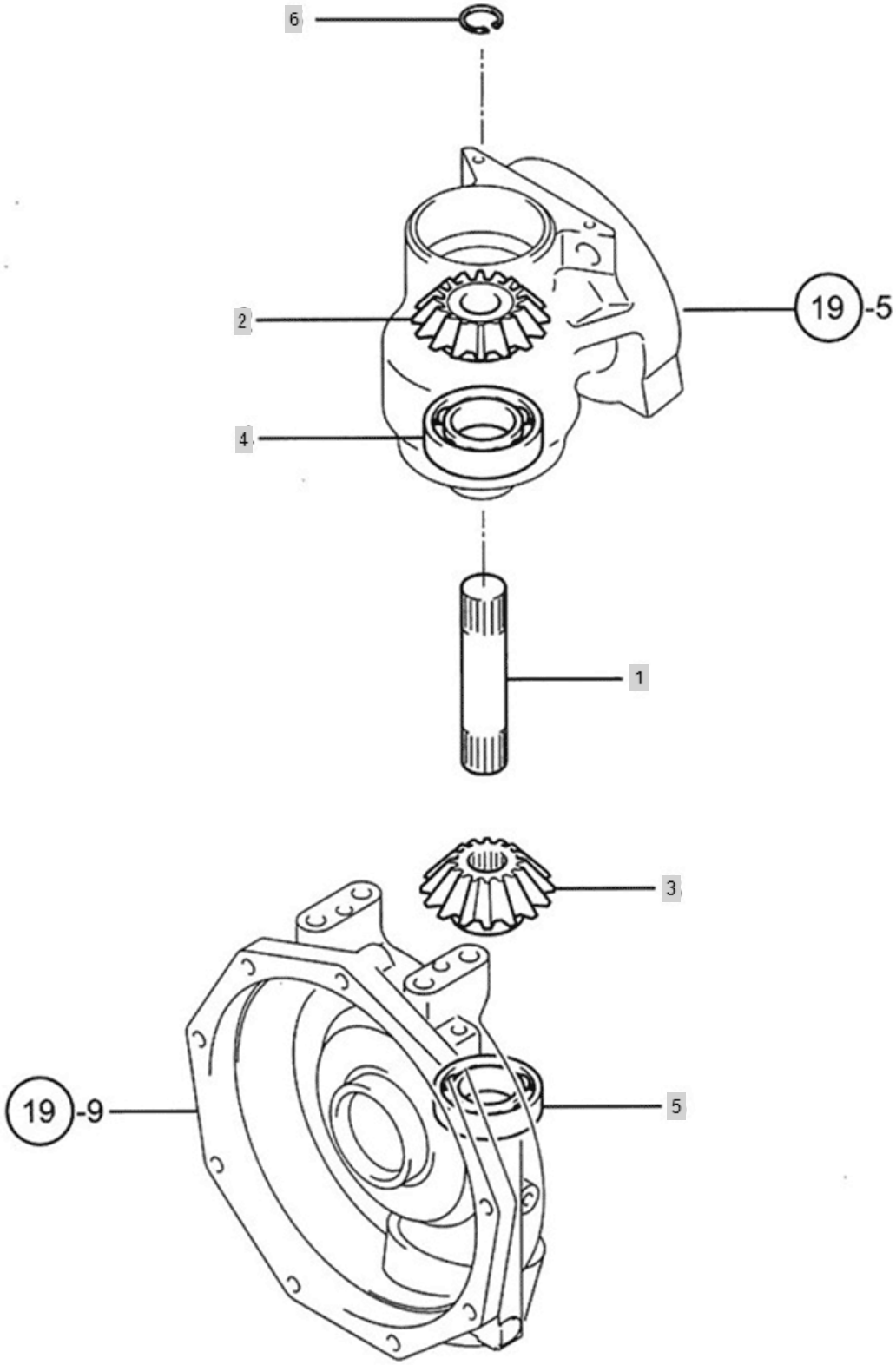

FIG S021 BRANSON 6530C	FRONT SECOND SHAFT	Year/Month 2020/02

KeyNo.	Part Number	Part Name	Quantity	Other
1	FB21060000A3	FRONT 2ND SHAFT	2	
2	FB21020000B3	GEAR 21T	2	
3	FT21030000B3	FINAL PINION	2	
4	FT21040000A4	BEARING(6209HL1)	2	
5	24101-060094	Bearing, Ball (#6009)	2	
6	22242-000300	SNAP RING, SHAFT (Φ 30)	2	

FIG S022 BRANSON 6530C	FRONT SPINDLE	Year/Month 2020/02

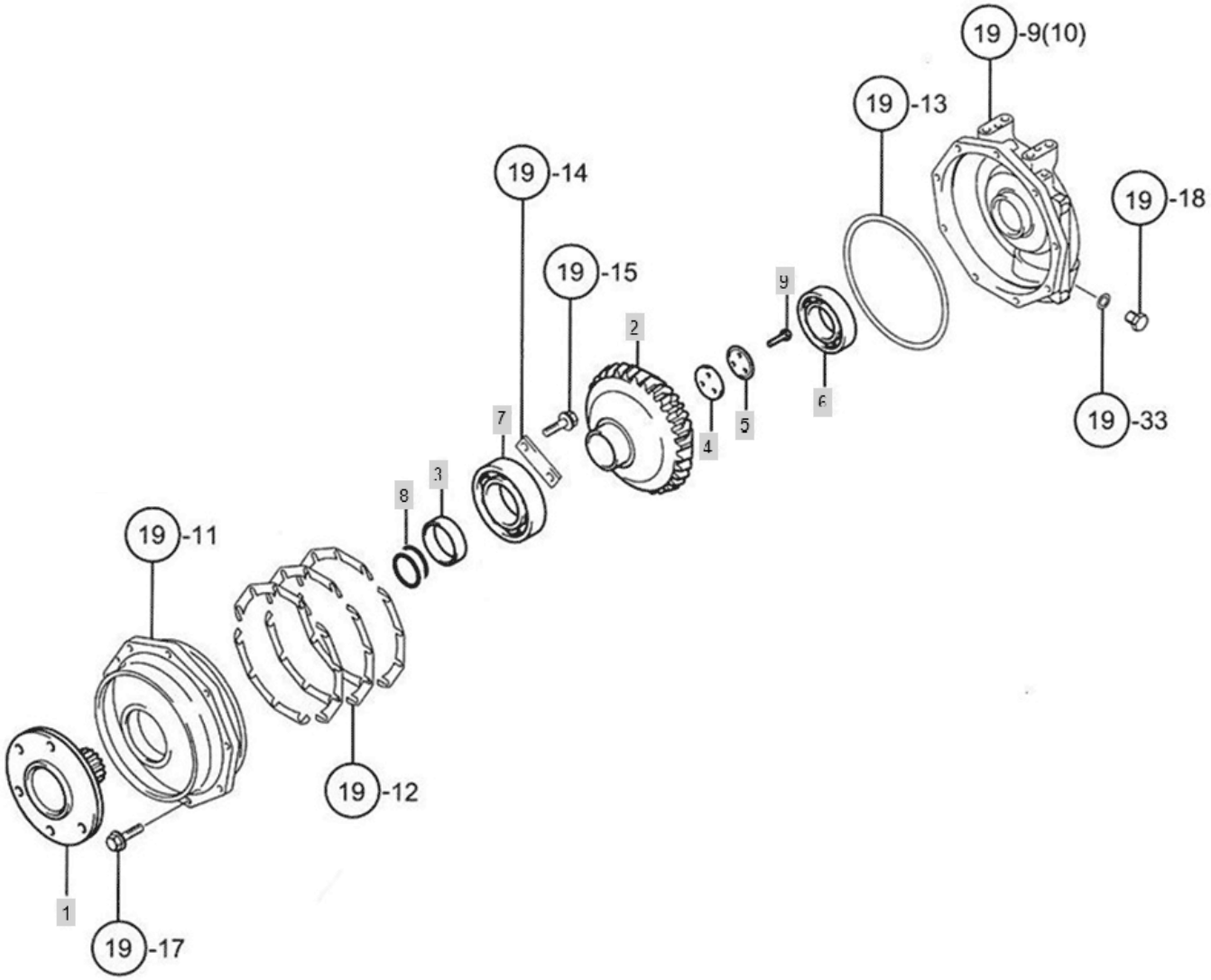

FIG S022 BRANSON 6530C	FRONT SPINDLE	Year/Month 2020/02

KeyNo.	Part Number	Part Name	Quantity	Other
1	FB22010000C2	FRONT SPINDLE	2	
2	FT22020000C2	GEAR,FRONT FINAL	2	
3	FB22030000B4	COLLAR	2	
4	FT22040000B4	WASHER	2	
5	FT22050000A4	BENDING WASHER	2	
6	24101-060144	BALL BEARING (#6014)	2	
7	24101-062134	BEARING, BALL (#6213)	2	
8	FB22080000A4	FLOATING SEAL	2	
9	FB22090000B4	HEX BOLT	6	

FIG S023 BRANSON 6530C	COVER, PROPELLER SHAFT	Year/Month 2020/02

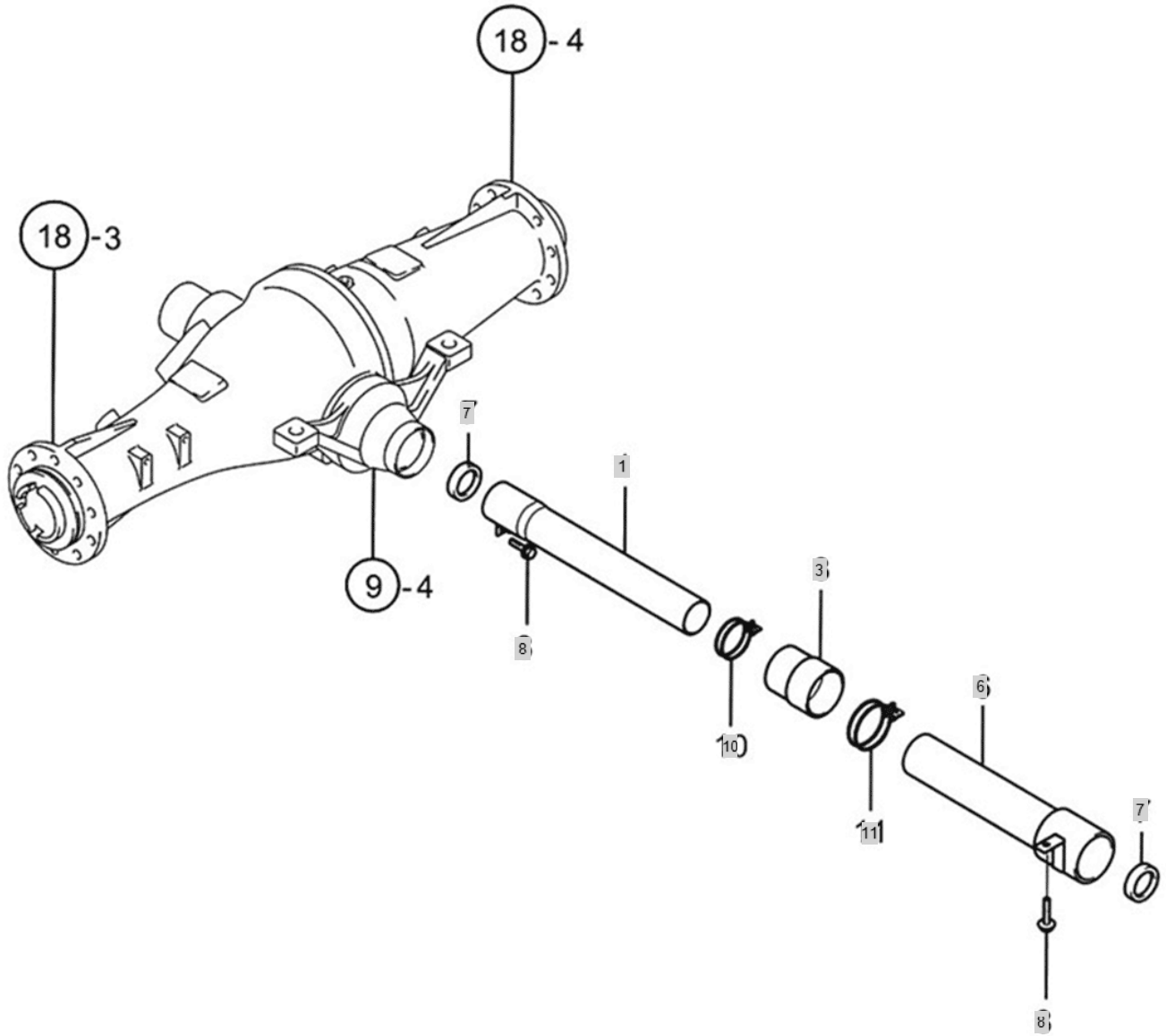

FIG S023 BRANSON 6530C	COVER, PROPELLER SHAFT	Year/Month 2020/02

KeyNo.	Part Number	Part Name	Quantity	Other
1	FT23010000A3	COVER ASS'Y,SHAFT	1	
3	TT23040000A4	BOOTS,SHAFTCOVER	1	
6	FT23020000A3	COVER ASS'Y,SHAFT	1	
7	TT23050000A4	SEAL, SHAFT COVER	2	
8	26106-080122	Bolt, Hexa (8-12)	2	
10	23010-050000	HOSEBAND50	1	
11	23010-055000	HOSEBAND55	1	

FIG S024 BRANSON 6530C	TIRE, FRONT WHEEL	Year/Month 2020/02

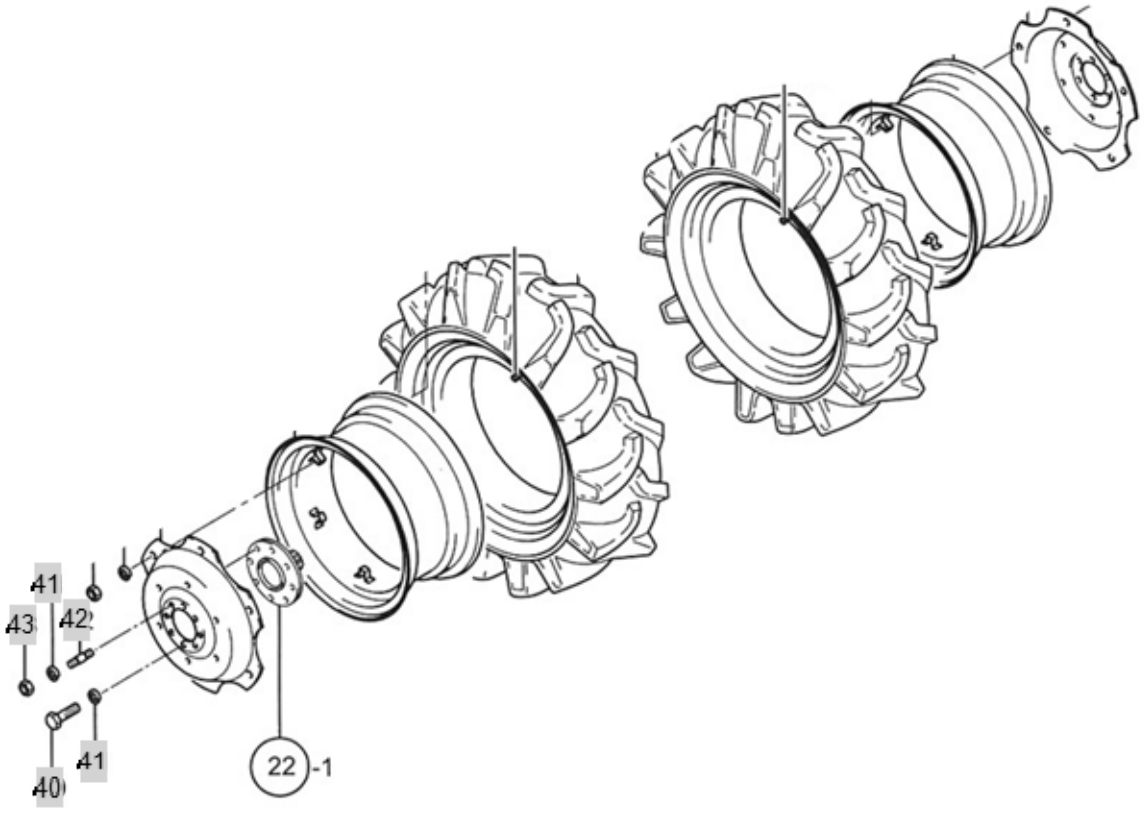

FIG S024 BRANSON 6530C	TIRE, FRONT WHEEL	Year/Month 2020/02

KeyNo.	Part Number	Part Name	Quantity	Other
40	FT24400000A4	HexBolt	12	
41	22217-160000	WASHER, SPRING (Φ 16)	16	
42	26236-160282	BOLT,STUD	4	
43	26736-160002	HEXNUT	4	

FIG S029 BRANSON 6530C	STEERING COLUMN	Year/Month 2020/02

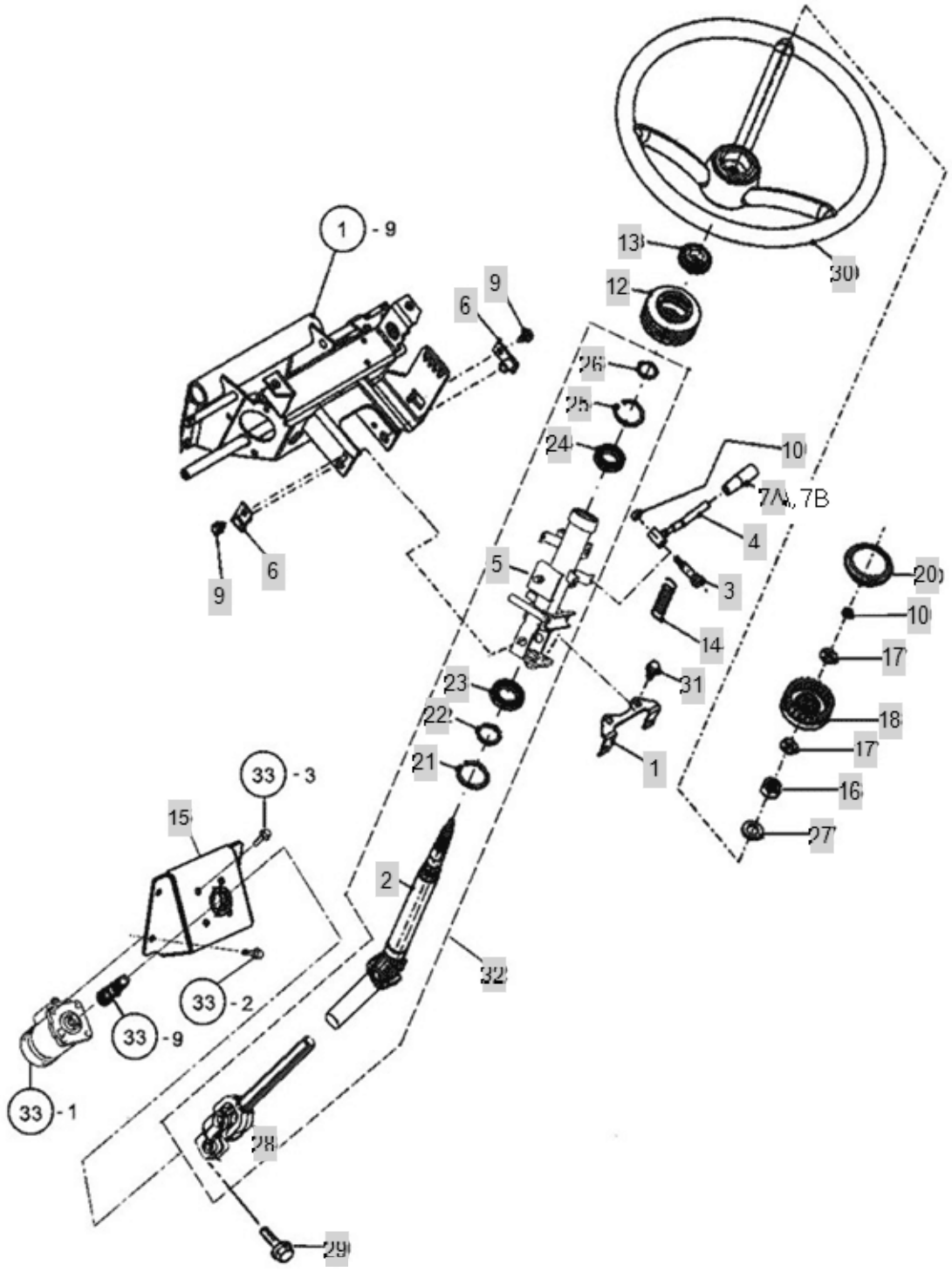

FIG S029 BRANSON 6530C	STEERING COLUMN	Year/Month 2020/02

KeyNo.	Part Number	Part Name	Quantity	Other
1	TC65010000A4	BRACKET(COLUMCOVERR)	1	
2	FB29020000A2	ASS'Y, STEERING AXIS	1	
3	TC65030000A4	TILTLEVERPIN	1	
4	TC65040000A4	TILTLEVER	1	
5	FB29050000A1	Steering Coulmn	1	
6	TC65060000A4	TILTPINASS'Y	2	
7A	TB16020000A4	LEVERKNOB	1	
7B	TA00015785A	LEVER, STAND	1	
9	26014-080122	BOLT(PW+SW)	2	
10	26347-080002	Unut	2	
12	FB29120000A3	Streeing Boots	1	
13	FB29130000A4	Fixed Bush, Boots	1	
14	TC65050000A4	TILTSPRING	1	
15	FB29150000A2	Construction pole,PST Valve	1	
16	26357-160002	NUT	1	
17	FB29170000A4	Reinforcement Washer	2	
18	FB29180000A3	Adjustment lever	1	
20	FB29200000A3	Steering Cap	1	
21	22262-000470	RING, CIRCLIP (Φ 47)	1	
22	22242-000301	SNAP RING, SHAFT (Φ 30)	1	
23	24107-069064	DEEP GROOVE BALL BEARING	1	
24	24104-069054	BALL BEARING	1	
25	22252-000420	RING, CIRCLIP (Φ 42)	1	
26	22242-000250	SNAP RING, SHAFT (Φ 25)	1	
27	22137-160000	WASHER, PLAIN (Φ 16)	1	
28	FB29280000A3	Ass'y Joint(bottom)	1	
29	26106-080202	SQR FLANGE BOLT	1	
30	TZ29030000A1	STEERING WHEEL	1	
31	26106-100182	SCREW,HEXAFLANGEHEADCAP	2	
32	FB29320000A9	Ass'y, Steering Column	1	

FIG S033 BRANSON 6530C	VALVE, STEERING	Year/Month 2020/02

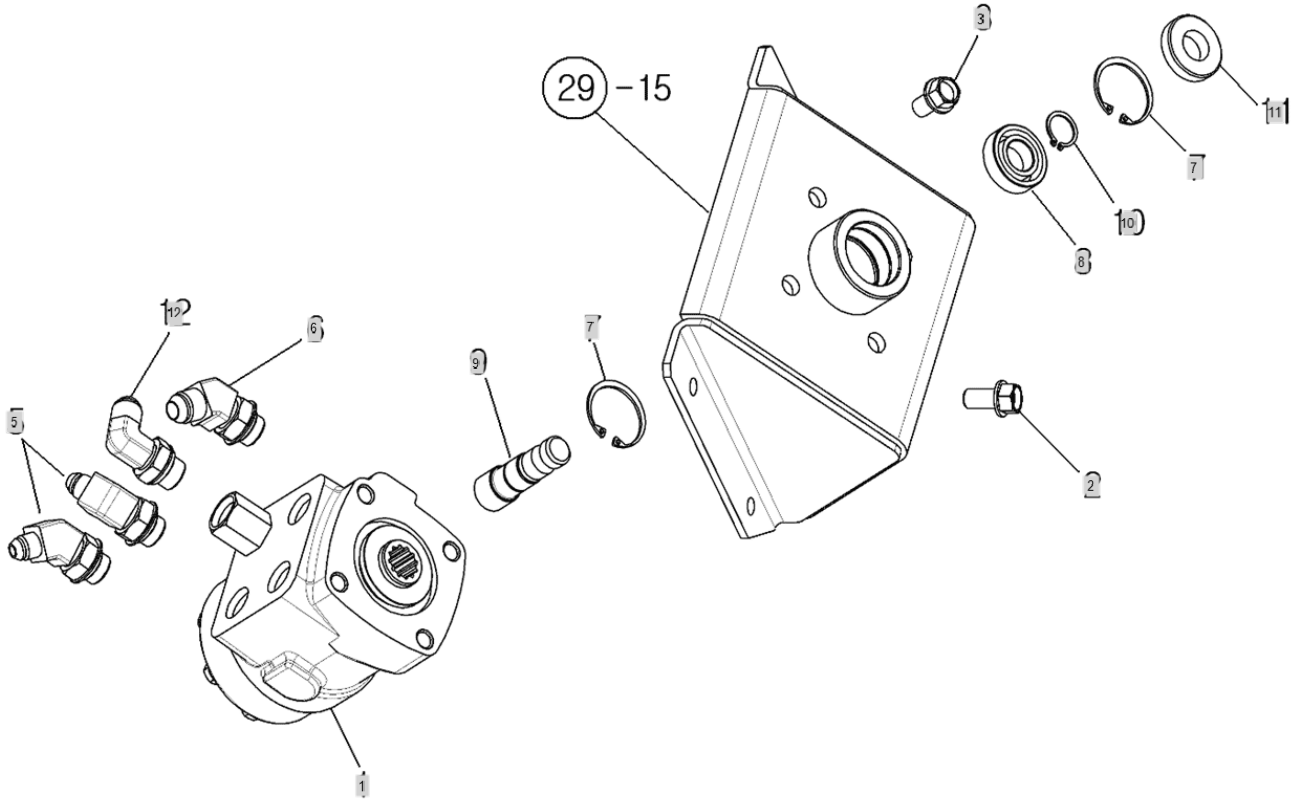

FIG S033 BRANSON 6530C	VALVE, STEERING	Year/Month 2020/02

KeyNo.	Part Number	Part Name	Quantity	Other
1	FT33010000A3	STEERING VALVE	1	
2	26106-100202	HEX BOLT, (10-20)	4	
3	26136-100182	SCREW,HEX FLANGE HEAD CAP	4	
5	FT33050000A4	45ELBOW[1/4]	2	
6	FT33060000A4	45ELBOW[3/8]	1	
7	22252-000350	RING, CIRCLIP (Φ 35)	2	
8	24104-060034	Bearing, Ball (#6003) Dubble Cap	1	
9	TT29140000A4	SHAFT, STG	1	
10	22242-000170	SNAP RING, SHAFT (Φ 17)	1	
11	24421-173508	OIL SEAL	1	
12	CEE4050000A4	ELBOW (3/8)	1	

FIG S034-2 BRANSON 6530C	PIPE, PS (6530)	Year/Month 2020/02

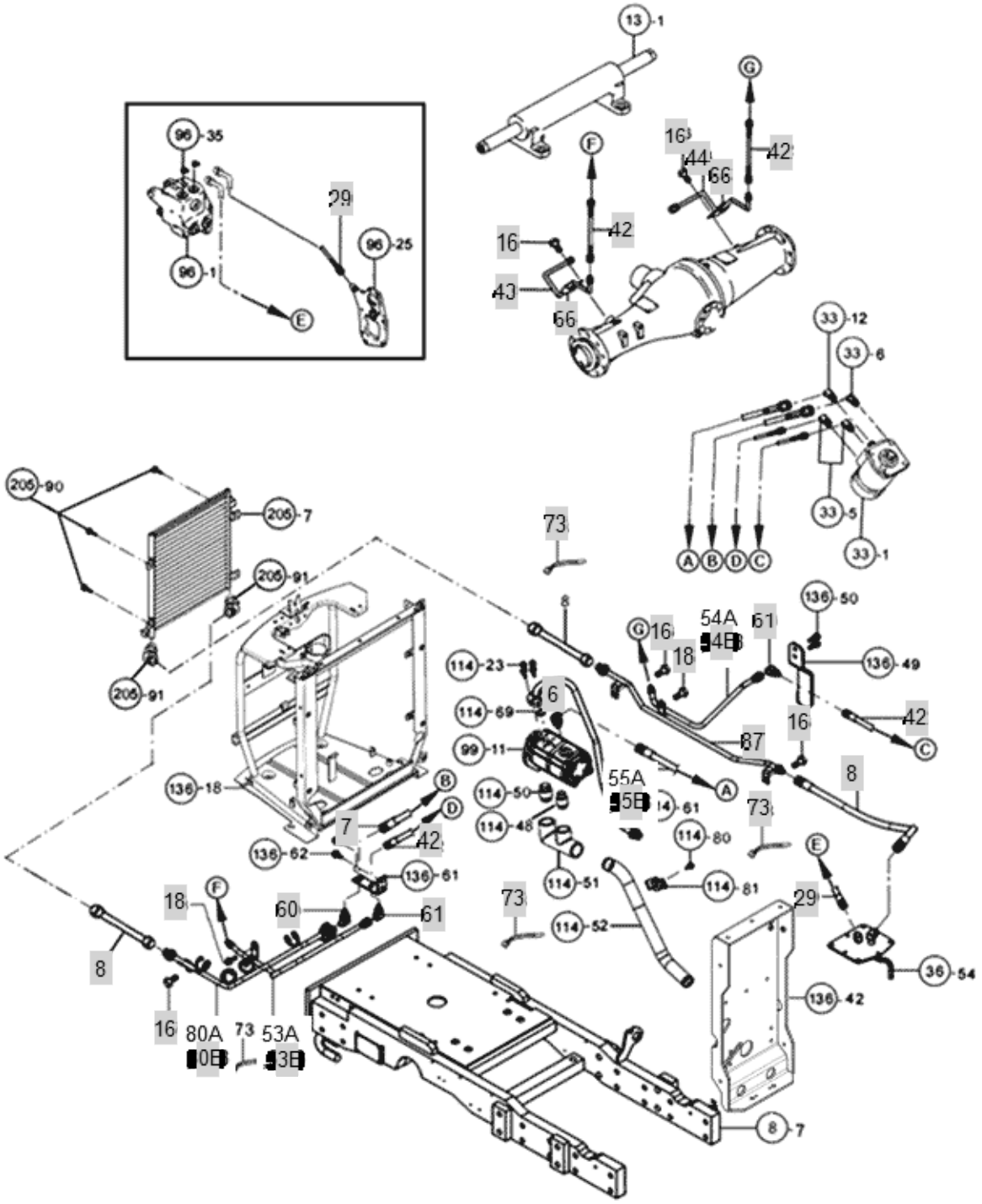

FIG S034-2 BRANSON 6530C	PIPE, PS (6530)	Year/Month 2020/02

KeyNo.	Part Number	Part Name	Quantity	Other
6	FB34060000A4	ELBOW	1	
7	FB34070000A3	PST drain hose	1	
8	FB34080000A3	PST Return Hose	3	
16	26106-080162	SCREW,HEXFLANGEHEADCAP	15	
18	26106-100162	SCREW,HEXFLANGEHEADCAP	1	
19	26116-140162	HEXAGON BOLT	1	
20	22217-140000	WASHER, SPRING (Φ 14)	1	
29	FB34290000A3	Brake Return Hose	2	
42	FT34420000B3	HOSE, PST CYLINDER	4	
43	FT34430000B2	PIPE(L)	1	
44	FT34440000B2	PIPE(R)	1	
53B	FB34530000A0	PST High Pressur Pipe	1	
54B	FB34540000A0	PST High Pressure Pipe	1	
55B	FB34550000A3	PST High Pressur Hose	1	
60	FT34600000A4	45 ELBOW(3/8)	1	
61	FT34610000A4	45 ELBOW(1/4)	2	
66	FT34660000A4	CLAMP(PST PIPE)	2	
73	TTB9420000A4	Band, Wire (250mm)	5	
80B	FB34800000A0	PST Low Pressure Pipe	1	
85	23000-025000	CLAMP,HOSE	4	
87	FB34870000A0	PST Low Pressure Pipe(R)	1	

FIG S036 BRANSON 6530C	CLUTCH HOUSING	Year/Month 2020/02

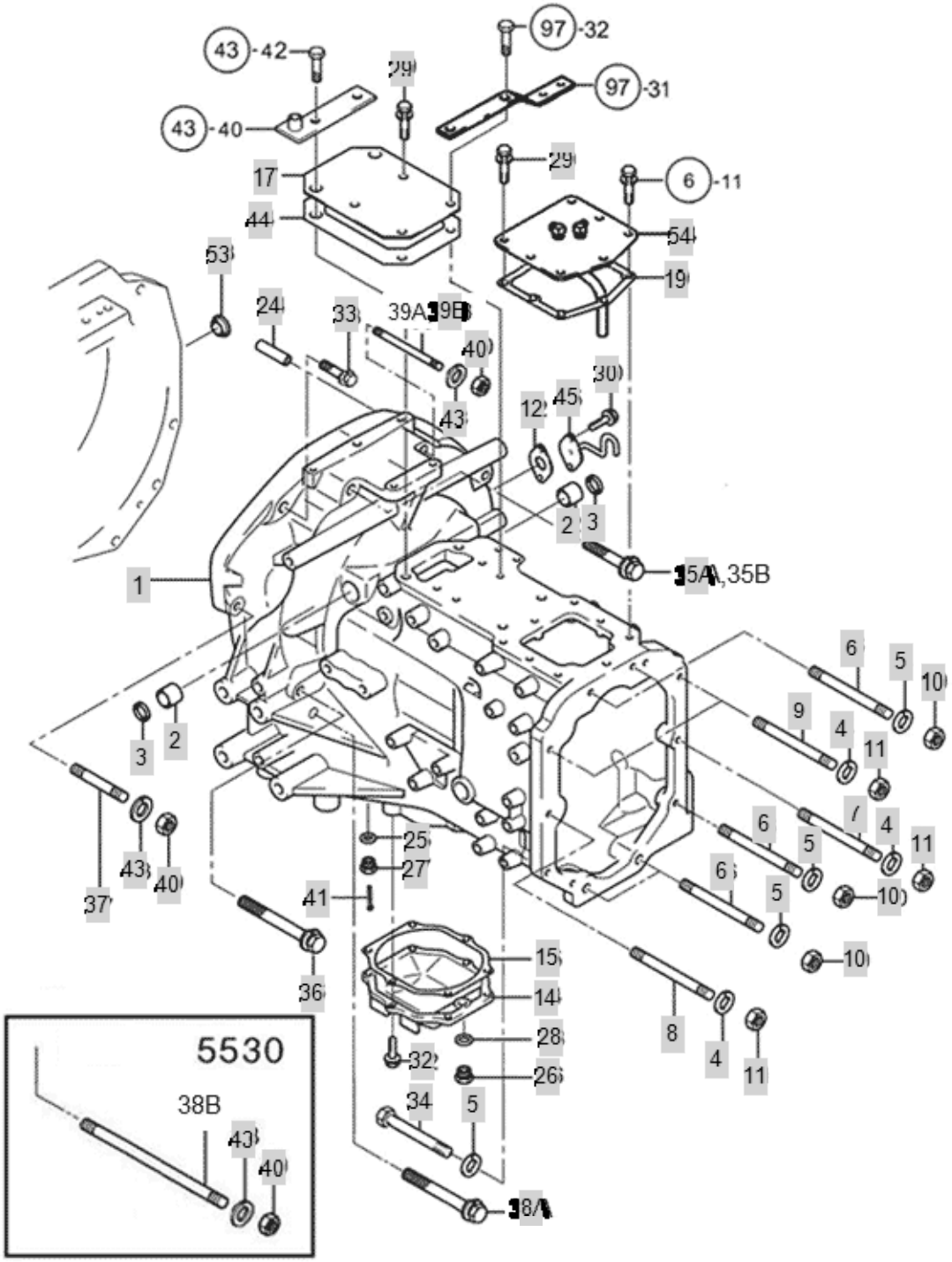

FIG S036 BRANSON 6530C	CLUTCH HOUSING	Year/Month 2020/02

KeyNo.	Part Number	Part Name	Quantity	Other
1	FB36010011B0	CLUTCH HOUSING	1	
2	TT36020000A4	BUSH20X26X22	2	
3	TT36030000A4	SEAL20X26X4	2	
4	22217-120000	WASHER, SPRING (Φ 12)	4	
5	22217-140000	WASHER, SPRING (Φ 14)	6	
6	FB36060000A4	STUD(M14X90)	5	
7	FT36070000A4	Stud Bolt(12X100)	1	
8	FT36080000A4	Stud Bolt(12X120)	1	
9	TZ3621H000A4	STUD(M12X1.75X108)	2	
10	FB36100000A4	HEXAGON NUT	5	
11	FT36100000A4	HEXAGON NUT	4	
12	TT36120000A4	PACKING, SIDE COVER	1	
14	TT36140000A3	COVER	1	
15	FB36150000A3	PACKING	1	
17	TT36170000A4	SEAL PLATE	1	
19	FB36190000A3	PACKING	1	
20	TB18040000A4	PLUG13	1	
24	22312-100200	PIN, DOWEL (10-20)	2	
25	23414-100000	PLAIN WASHER (D10)	2	
26	23491-140002	PLUG, DRAIN -> 23490-140002	1	
27	FT36270000A4	PentaHeadPlug	1	
28	24311-000160	O-RING, DYNAMIC (Φ16)	1	
29	26013-080162	Bolt, Hexa (8-16)	1	
30	26106-080162	SCREW,HEXFLANGEHEADCAP	7	
32	26013-080302	HEX BOLT W/WASHER	2	
33	FB36330000A4	Hex Bolt With Washer	6	
34	FB36340000A4	Bolt14X90	1	
35A	FB36350000A4	Hex Bolt With Washer	1	
36	FB36360000A4	Hex Bolt With Washer	3	
37	FB36370000A4	Stud Bolt	1	
38A	FB36380000A4	Hex Bolt With Washer	2	
39B	FL36390000A4	Stud Bolt	1	
40	FT36100000A4	HEXAGON NUT	4	
41	22417-250180	PIN , COTTER (2-18)	1	
43	22217-120000	WASHER, SPRING (Φ 12)	5	
44	FB36440000A3	PACKING	1	
45	FT36450000A3	AIR BRIDER	1	
53	TTC5190000A4	GROMMET20.5	1	
54	FT36540000B2	MISSIONCASECOVER	1	

FIG S038 BRANSON 6530C	CLUTCH ASS'Y	Year/Month 2020/02

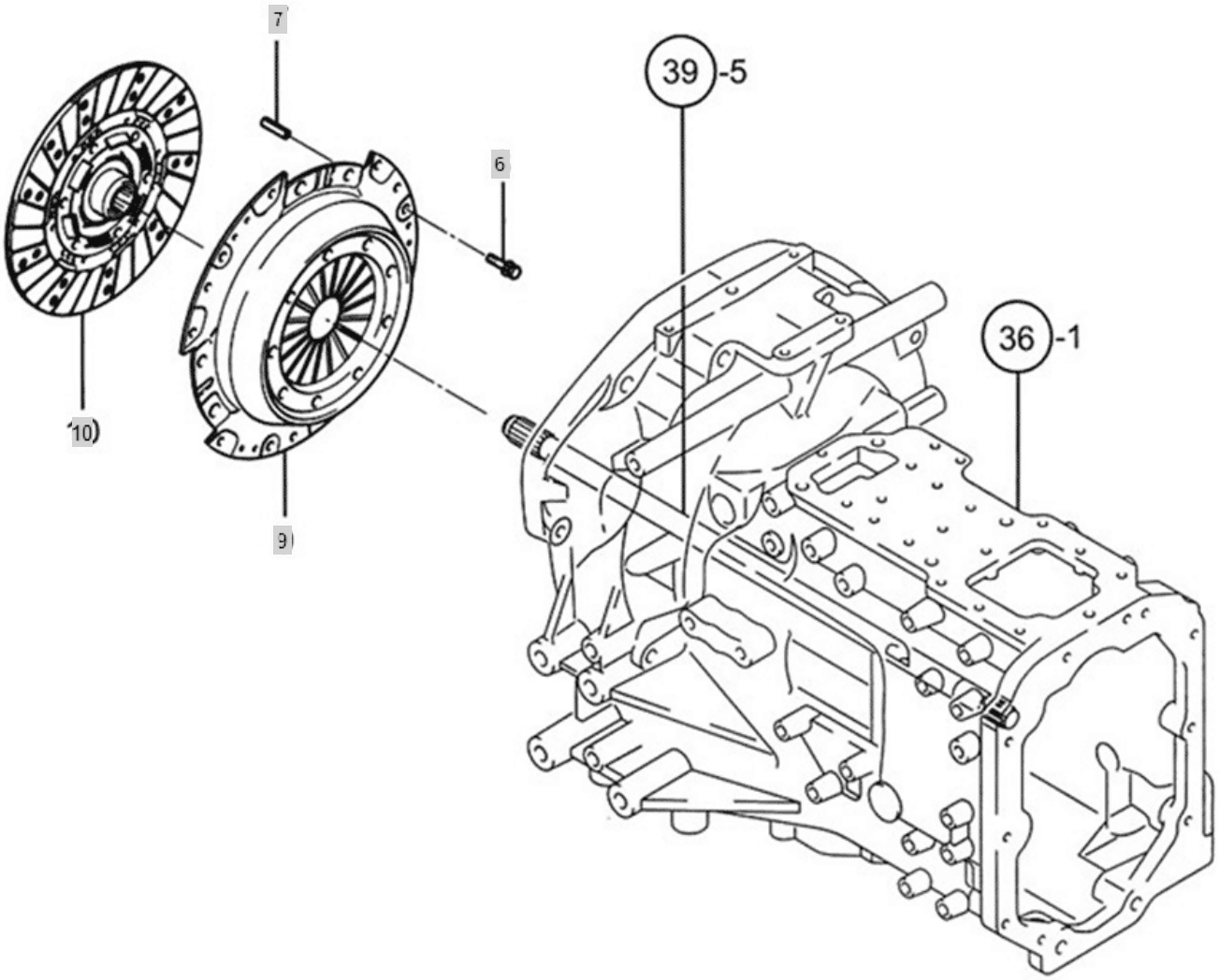

FIG S038 BRANSON 6530C	CLUTCH ASS'Y	Year/Month 2020/02

KeyNo.	Part Number	Part Name	Quantity	Other
6	26013-080182	SCREW,CAPTIVEWASHERCAP	12	
7	22351-100018	PIN, SPRING (10-18)	3	
9	FT38090000A2	COVER, CLUTCH	1	
10	FT38100000A2	DISK, CLUTCH -> FT38100000B2	1	

FIG S039 BRANSON 6530C	CLUTCH SHAFT	Year/Month 2020/02

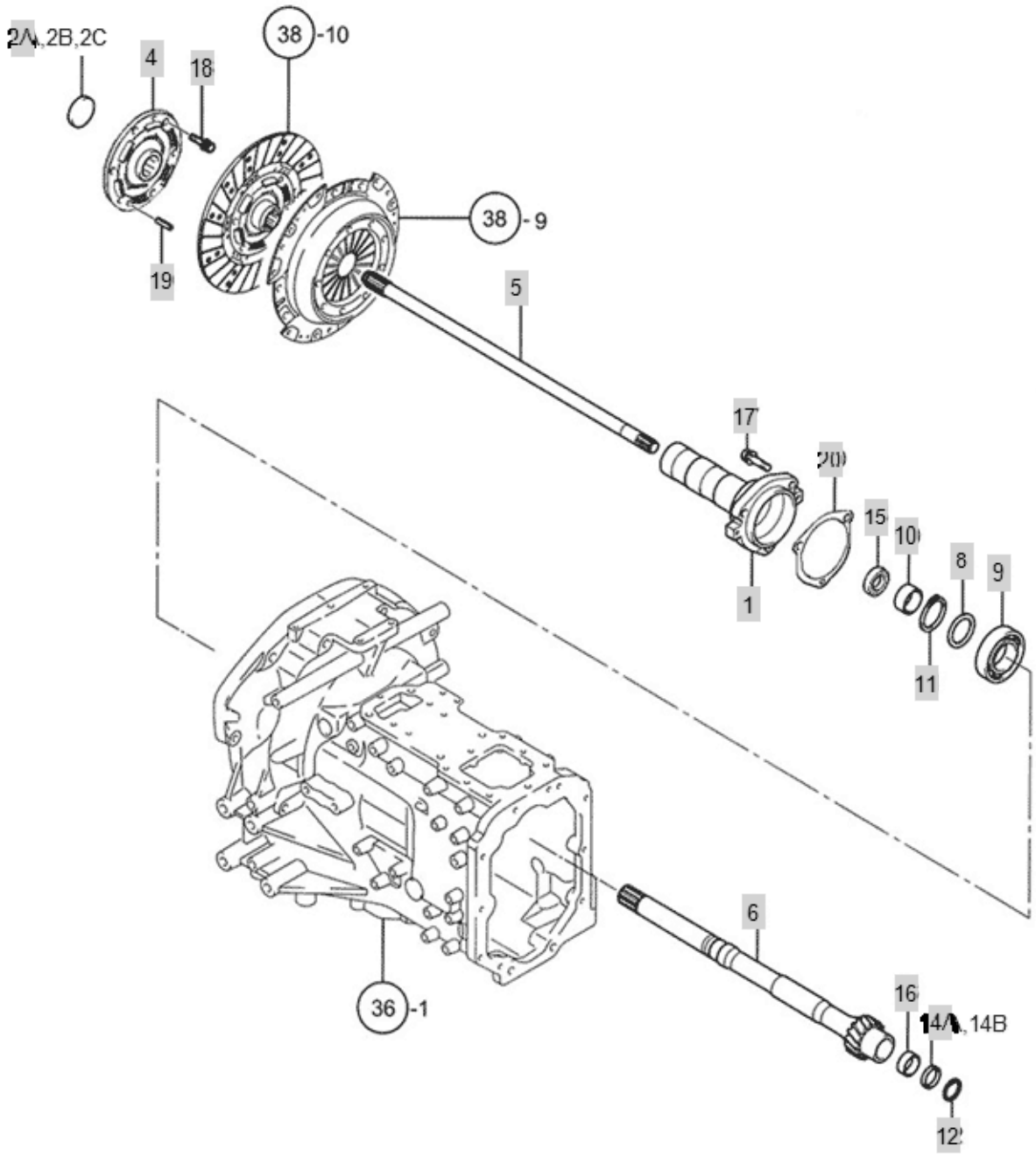

FIG S039 BRANSON 6530C	CLUTCH SHAFT	Year/Month 2020/02

KeyNo.	Part Number	Part Name	Quantity	Other
1	FB39010000B3	OIL SEAL CASE	1	
2A	FB39020000A4	Collar	1	
4	FB39040000A2	DAMPER	1	
5	FT39050000A3	MAIN SHAFT(INNER)	1	
6	FB39060000A3	MAIN SHAFT(OUTER)	1	
8	TT39080000B4	SPACER	1	
9	TT39090000A4	BALLBEARINGTMB206	1	
10	FT39100000A4	SLEEVE	1	
11	22242-000300	SNAP RING, SHAFT (Φ 30)	1	
12	22252-000320	RING, CIRCLIP (Φ 32)	1	
14A	24413-203007	Seal, Oil (#20-30-07)	1	
15	FT39150000A4	OILSEAL	1	
16	24550-020120	DRYBUSH	1	
17	26013-080252	Bolt, Hexa (8-25)	3	
18	FB39180000A4	SCREW,CAPTIVE WASHER CAP	6	
19	22351-060016	PIN, SPRING (6-16)	2	
20	FB39200000A4	PACKING, OIL SEAL CASE	1	

FIG S040 BRANSON 6530C	CLUTCH RELEASE	Year/Month 2020/02

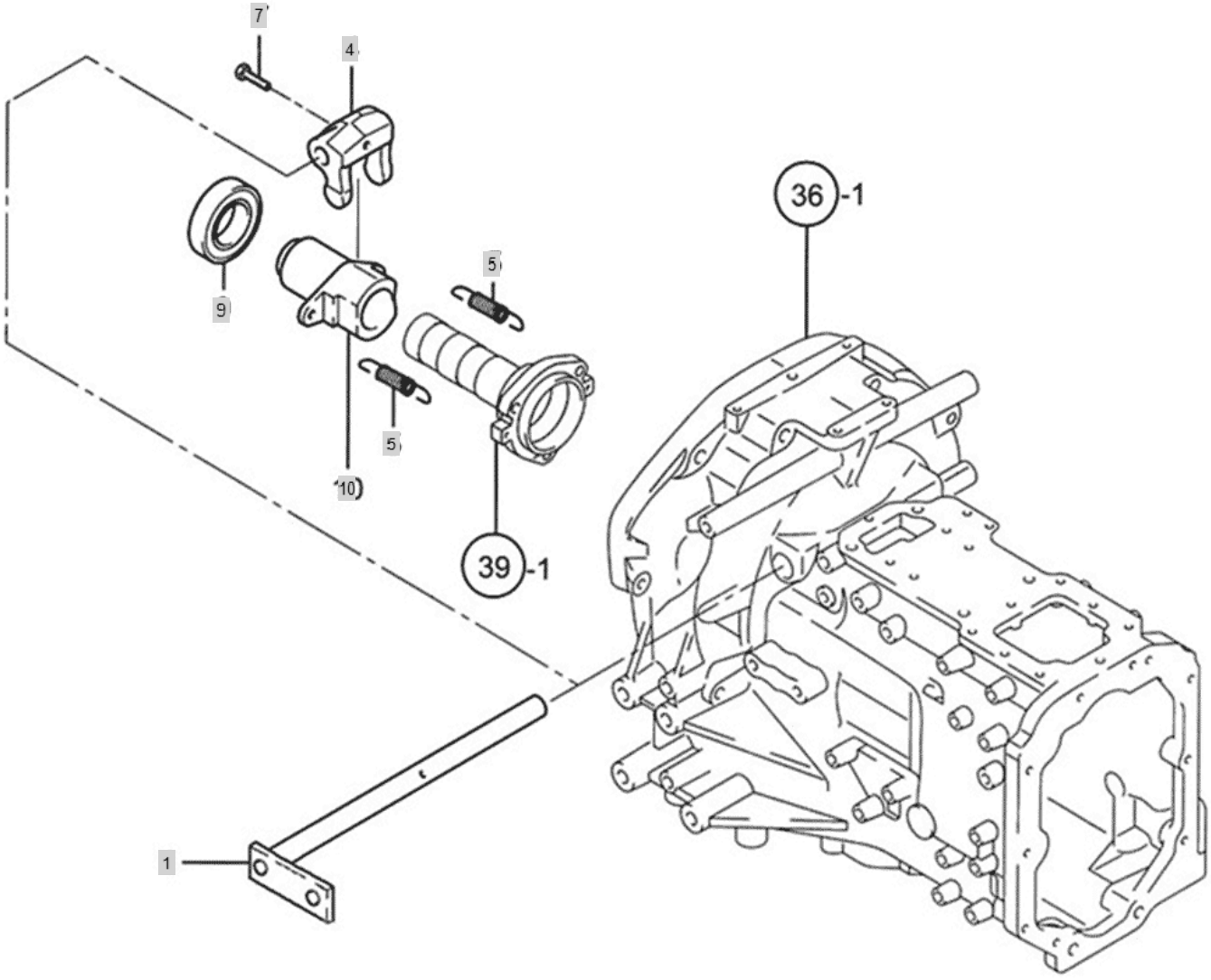

FIG S040 BRANSON 6530C	CLUTCH RELEASE	Year/Month 2020/02

KeyNo.	Part Number	Part Name	Quantity	Other
1	FB40010000A3	Release Axis	1	
4	FB40040000A4	Clutch Shifter york	1	
5	FB40050000A4	Return Spring	2	
7	FB40070000A4	HEX BOLT	1	
9	FT40090000A4	RELEASE BEARING	1	
10	FB40100000A3	BEARING SLEEVE	1	

FIG S041 BRANSON 6530C	PEDAL, CLUTCH	Year/Month 2020/02

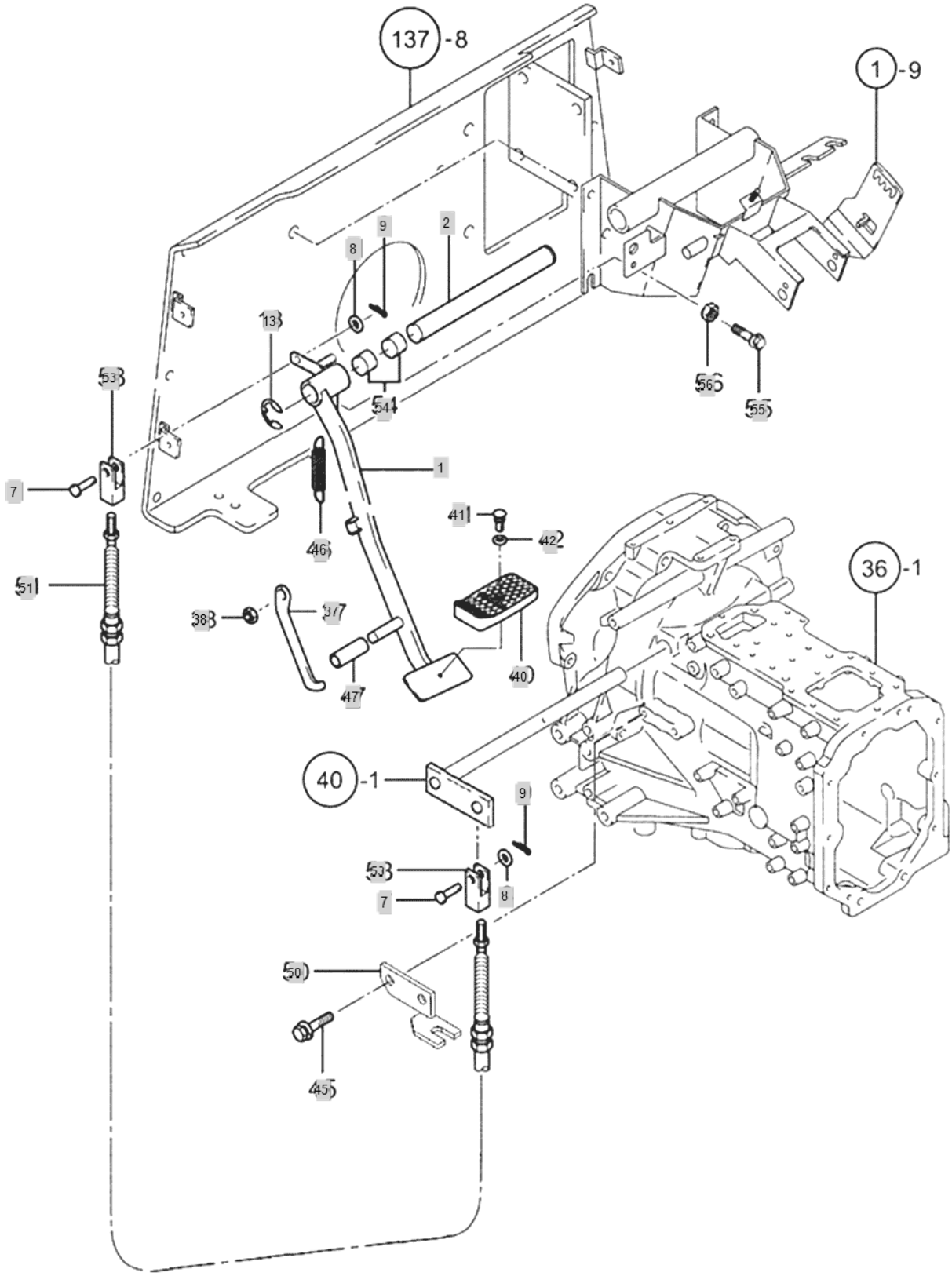

FIG S041 BRANSON 6530C	PEDAL, CLUTCH	Year/Month 2020/02

KeyNo.	Part Number	Part Name	Quantity	Other
1	FB41010000A2	Clutch Pedal	1	
2	FT41020000A3	SHAFT, CLUTCH PEDAL	1	
7	22486-100220	PIN, HEAD (10-22)	2	
8	22117-100000	WASHER, PLAIN (Φ 10)	2	
9	RR64050000A4	Pin, Come-Off Snap (Φ8)	2	
13	22272-000190	RING, CIRCLIP (Φ 19)	2	
37	FT41370000A4	LOCK, CLUTCH PEDAL	1	
38	26341-080002	U-NUT	1	
40	TC73050000A3	PEDALHEADCOVER	1	
41	TC73030000A4	RIVET(PEDALHEAD)	1	
42	TC73040000A4	WASHER(REVET)	1	
45	26013-120202	HEXBOLTWITHWASHER	2	
46	FB41460000A4	Return Spring	1	
47	TC73020000A3	PIPE(CLUTCHSTOPPER)	1	
50	FB41500000A3	Cable Holder(Bottom)	1	
51	FB41510000B3	CLUTCH CABLE ASS'Y	1	
53	FB41530000A4	CLEVIS M8	2	
54	TC73010200A4	BUSH25*28*20	2	
55	26116-080404	BOLT	1	
56	26716-080002	NUT,HEX (D8)	1	

FIG S043 BRANSON 6530C	LEVER. SHUTTLE (OLD VERSION)	Year/Month 2020/02

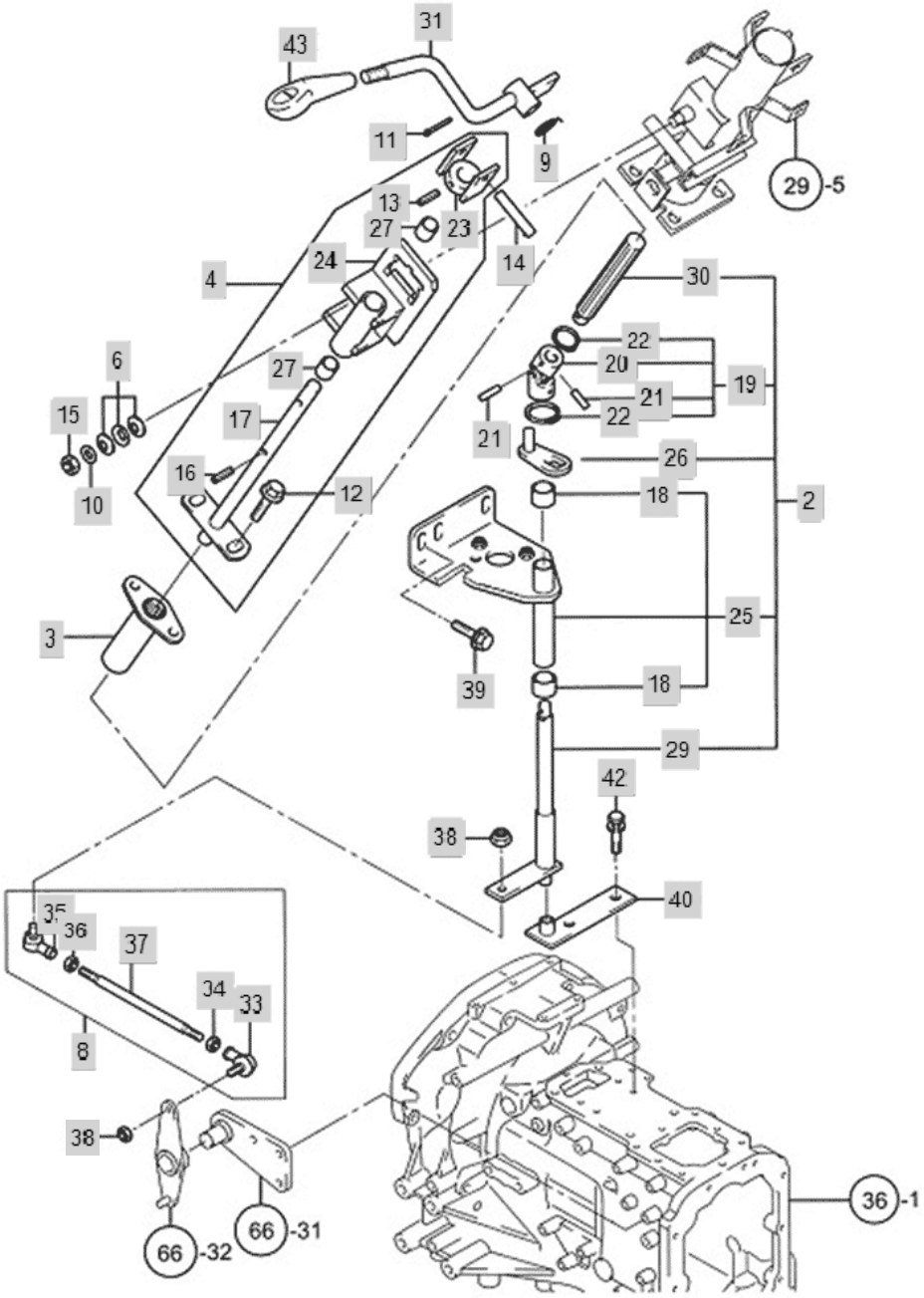

FIG S043 BRANSON 6530C	LEVER. SHUTTLE (OLD VERSION)	Year/Month 2020/02

KeyNo.	Part Number	Part Name	Quantity	Other
2	FT43020000C9	REVERSER AXIS ASS'Y	1	
3	TC94030000C4	COUPLING	1	
4	FB43040000A9	BRACKET ASS'Y	1	
6	TC94060000A4	PRING12	3	
8	FT43080000B4	ROAD ASSY	1	
9	TC94090000A4	RETURNSPRING(F-R)	1	
10	22137-100000	WASHER, PLAIN (Φ 10)	1	
11	22417-200300	PIN , COTTER (2-30)	1	
12	26106-080162	SCREW,HEXFLANGEHEADCAP	2	
13	22351-060032	PIN, SPRING (6-32)	1	
14	TC94050000A4	PIN(8*52)	1	
15	26347-100002	U-NUT	1	
16	22351-060024	PIN, SPRING (6-24)	1	
17	FT43170000A4		1	
18	24550-016150	DRYBUSH	2	
19	TC94020300A4	JOINT ASSY	1	
20	TC94020300A4	JOINT ASSY	1	
21	TC94020302A9	SHAFTASSY	2	
22	TC94020303A9	SNAP RING	2	
23	TC94040300A3	HOLDER,REVERSERLEVER	1	
24	FB43240000A3	BRACKET(REVERSER ASS'Y)	1	
25	FT43250000B3	BRACKET	1	
26	FT43260000A4	JOINT	1	
27	24550-015120	DRYBUSH	2	
29	FT43290000C3	ReverserAxis	1	
30	FT43300000A4		1	
31	FT43310000A2	LEVER	1	
33	TC94080400A4	ROD END(L)	1	
34	TC94080500A4		1	
35	TC94080200A4	RODEND	1	
36	26716-080002	NUT,HEX (D8)	1	
37	FT43080100B4		1	
38	26347-080002	Unut	2	
39	26106-100202	HEX BOLT, (10-20)	3	
40	FT43400000A4	SHAFT-HOLDER, REVERSER	1	
42	26013-120252	SCREW,CAPTIVEWASHERCAP	2	
43	NT01230000A3	KNOB, SHUTTLE	1	

FIG S043-2 BRANSON 6530C	LEVER, SHUTTLE (CURRENT VERSION)	Year/Month 2020/02

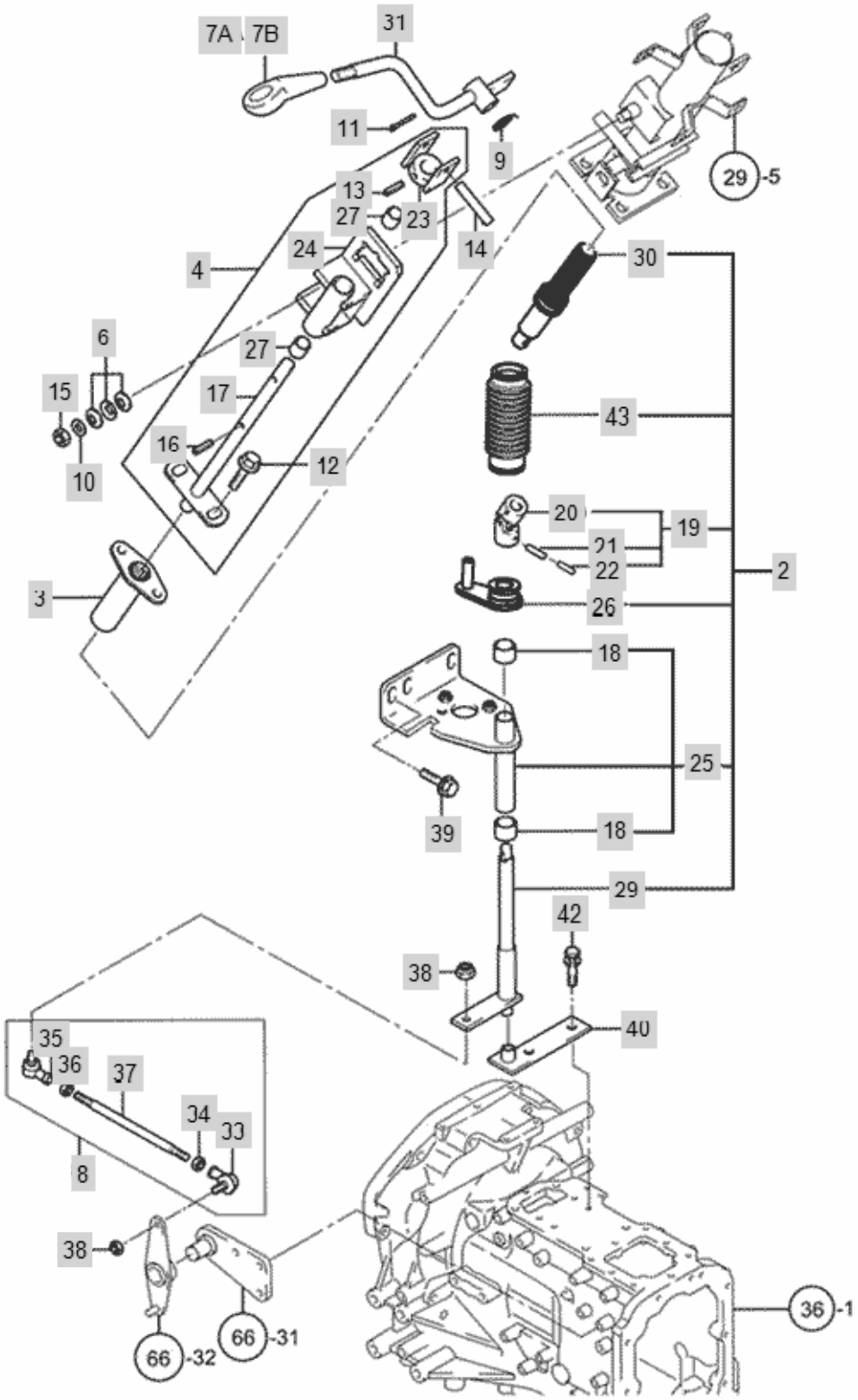

FIG S043-2 BRANSON 6530C	LEVER, SHUTTLE (CURRENT VERSION)	Year/Month 2020/02

KeyNo.	Part Number	Part Name	Quantity	Other
2	FT43020006D9	REVERSER AXIS ASS'Y	1	
3	TC94030000C4	COUPLING	1	
4	FB43040000A9	BRACKET ASS'Y	1	
6	TC94060000A4	PRING12	3	
7A	FT43080000B4	ROAD ASSY	1	
7B	TA00015799B	KNOB, SHUTTLE LEVER	1	
8	FT43080000B4	ROAD ASSY	1	
9	TC94090000A4	RETURNSPRING(F-R)	1	
10	22137-100000	WASHER, PLAIN (Φ 10)	1	
11	22417-200300	PIN , COTTER (2-30)	1	
12	26106-080162	SCREW,HEXFLANGEHEADCAP	2	
13	22351-060032	PIN, SPRING (6-32)	1	
14	TC94050000A4	PIN(8*52)	1	
15	26347-100002	U-NUT	1	
16	22351-060024	PIN, SPRING (6-24)	1	
17	FT43170000A4		1	
18	24550-016150	DRYBUSH	2	
19	TC94020300A4	JOINT ASSY	1	
20	TC94020300A4	JOINT ASSY	1	
21	22351-050020	PIN, SPRING (5-20)	2	
22	22351-030020	PIN, SPRING (3X20)	2	
23	TC94040300A3	HOLDER,REVERSERLEVER	1	
24	TA00018746A	BRACKET SHAFT, REVERSER	1	
25	TA00018750A	SHAFT REVERSER	1	
26	TA00018748A	JOINT (ARM ASS'Y)	1	
27	24550-015120	DRYBUSH	2	
29	FT43290000C3	ReverserAxis	1	
30	TA00018752A	CENTER SHAFT ASS'Y	1	
31	FT43310000B2	LEVER	1	
33	TC94080400A4	ROD END(L)	1	
34	TC94080500A4		1	
35	TC94080200A4	RODEND	1	
36	26716-080002	NUT,HEX (D8)	1	
37	FT43080100B4		1	
38	26347-080002	Unut	2	
39	26106-100202	HEX BOLT, (10-20)	3	
40	FT43400000B4	SHAFT-HOLDER, REVERSER	1	
42	26013-120252	SCREW,CAPTIVEWASHERCAP	2	
43	TA00017481A	JOINT BOOT	1	

FIG S044 BRANSON 6530C	TRANSMISSION CASE	Year/Month 2020/02

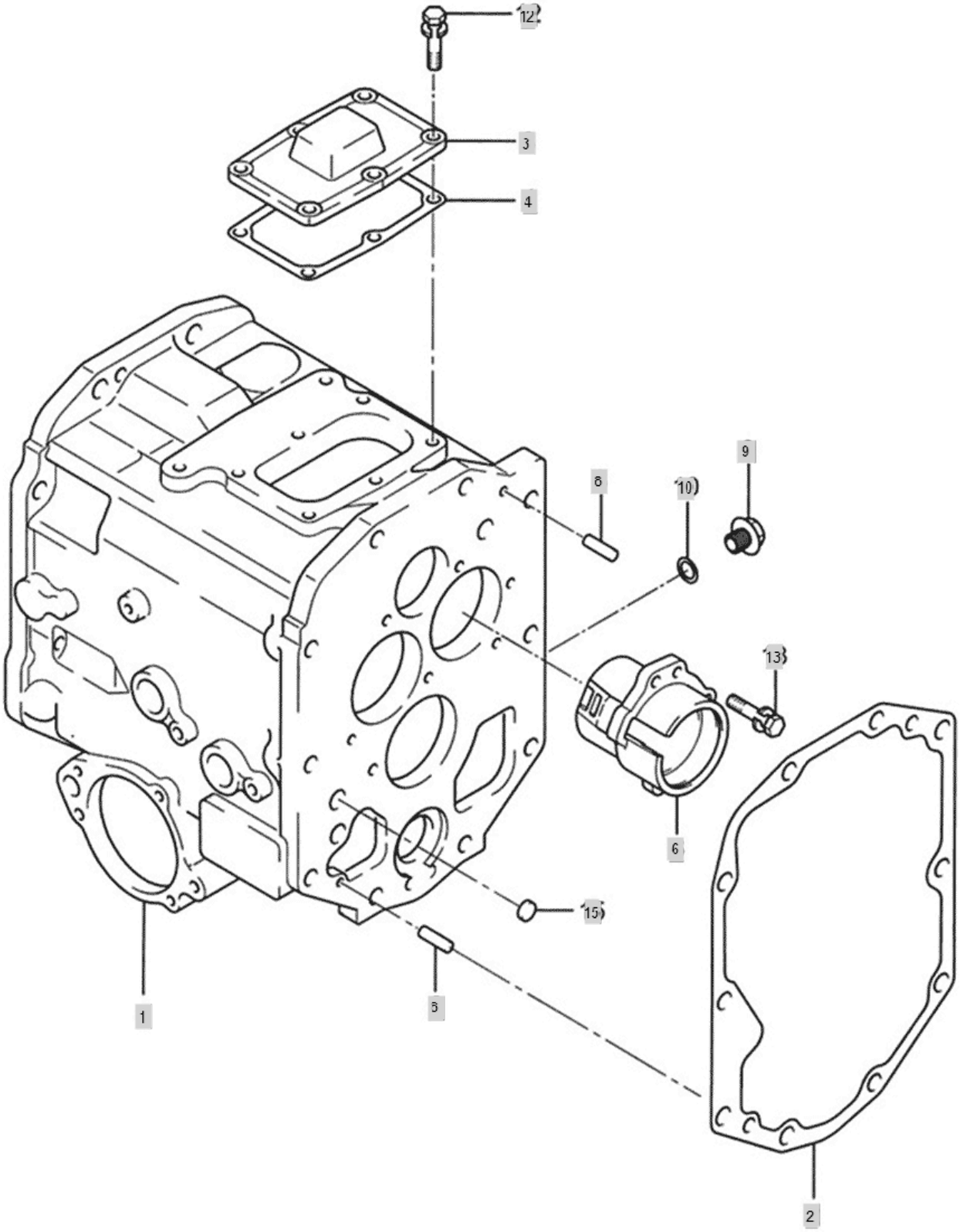

FIG S044 BRANSON 6530C	TRANSMISSION CASE	Year/Month 2020/02

KeyNo.	Part Number	Part Name	Quantity	Other
1	FB44010000A0	MISSION CASE	1	
2	FB44020000A3	PACKING, MISSION CASE	1	
3	FB44030000A2	COVER	1	
4	FB44040000A4	PACKING, UPPER COVER	1	
6	TT44060000A3	BEARING CASE	1	
8	22312-100180	PIN, DOWEL (10-18)	2	
9	TB28120000C4	DRAIN PLUG	1	
10	24311-000160	O-RING, DYNAMIC (Φ16)	1	
12	26013-080252	Bolt, Hexa (8-25)	6	
13	26013-080252	Bolt, Hexa (8-25)	3	
15	27260-150000	Cap, Seal (d=15mm)	1	

FIG S045 BRANSON 6530C	CENTER PLATE	Year/Month 2020/02

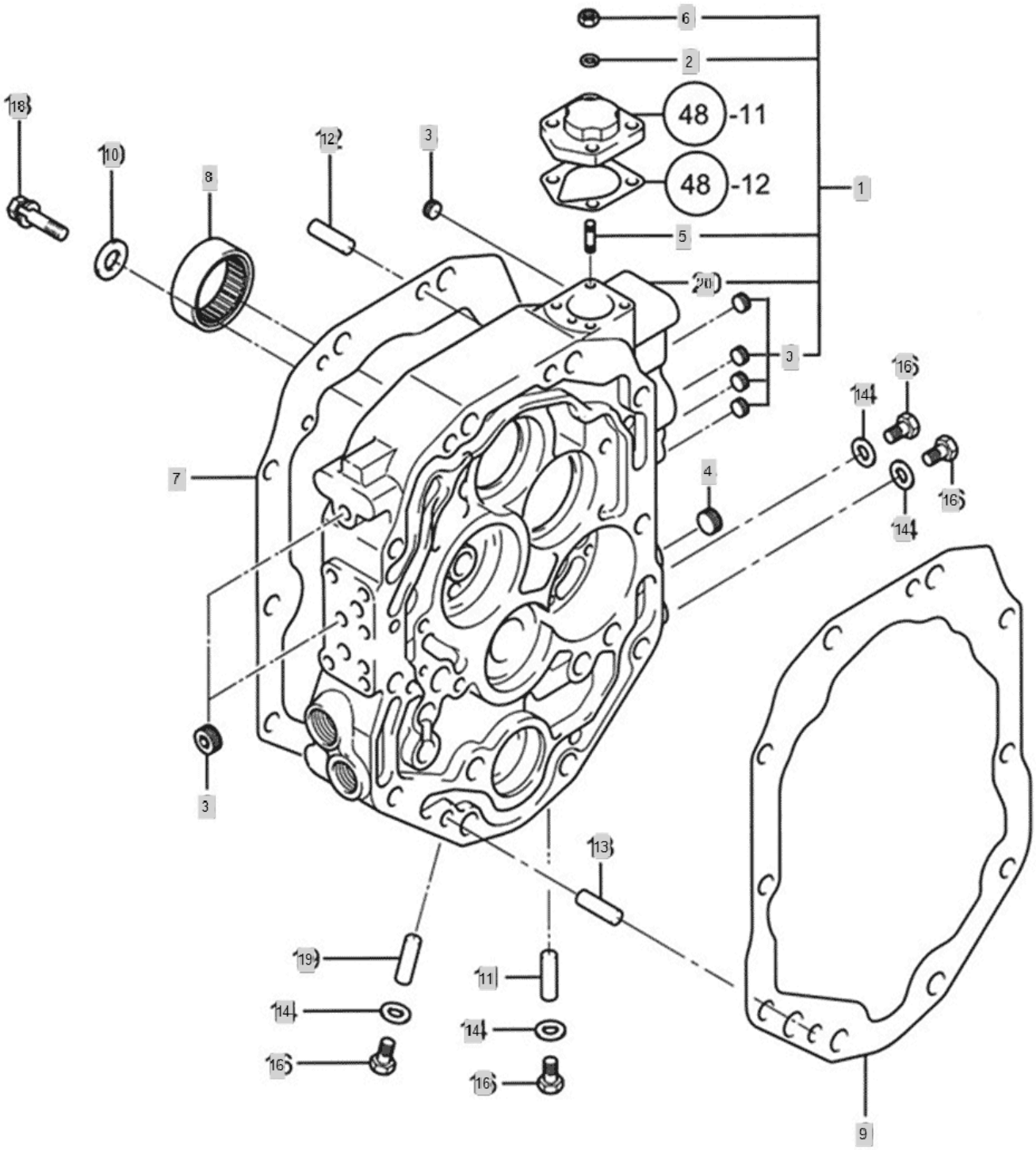

FIG S045 BRANSON 6530C	CENTER PLATE	Year/Month 2020/02

KeyNo.	Part Number	Part Name	Quantity	Other
1	FB45010000A9	CENTER PLATE ASS'Y	1	
2	22217-060000	WASHER, SPRING (Φ 06)	2	
3	23871-010000	PLUG	7	
4	23871-030000	PLUG, PIPE	1	
5	26216-060182	STUD(1.5D)	2	
6	26716-060002	HEX NUT (Φ6)	2	
7	FB45070000A3	PCAKING-CP	1	
8	TT45080000A4	NEEDLE BEARING (RNA4907R)	1	
9	FB45090000A3	PACKING-CPM	1	
10	22157-080000	WASHER, PLAIN (Φ 08)	1	
11	22312-080280	PIN, DOWEL (8-28)	1	
12	22312-100320	PIN, DOWEL (10-32)	2	
13	22312-100320	PIN, DOWEL (10-32)	2	
14	23414-100000	PLAIN WASHER (D10)	4	
16	23887-100002	SCREW,HEXAGONHEADCAP	4	
18	26013-080162	Bolt, Hexa (8-16)	1	
19	22312-080120	PIN, DOWEL (8-12)	1	
20	FB45010011B0	CENRER PLATE	1	

FIG S047 BRANSON 6530C	PTO PS PUMP	Year/Month 2020/02

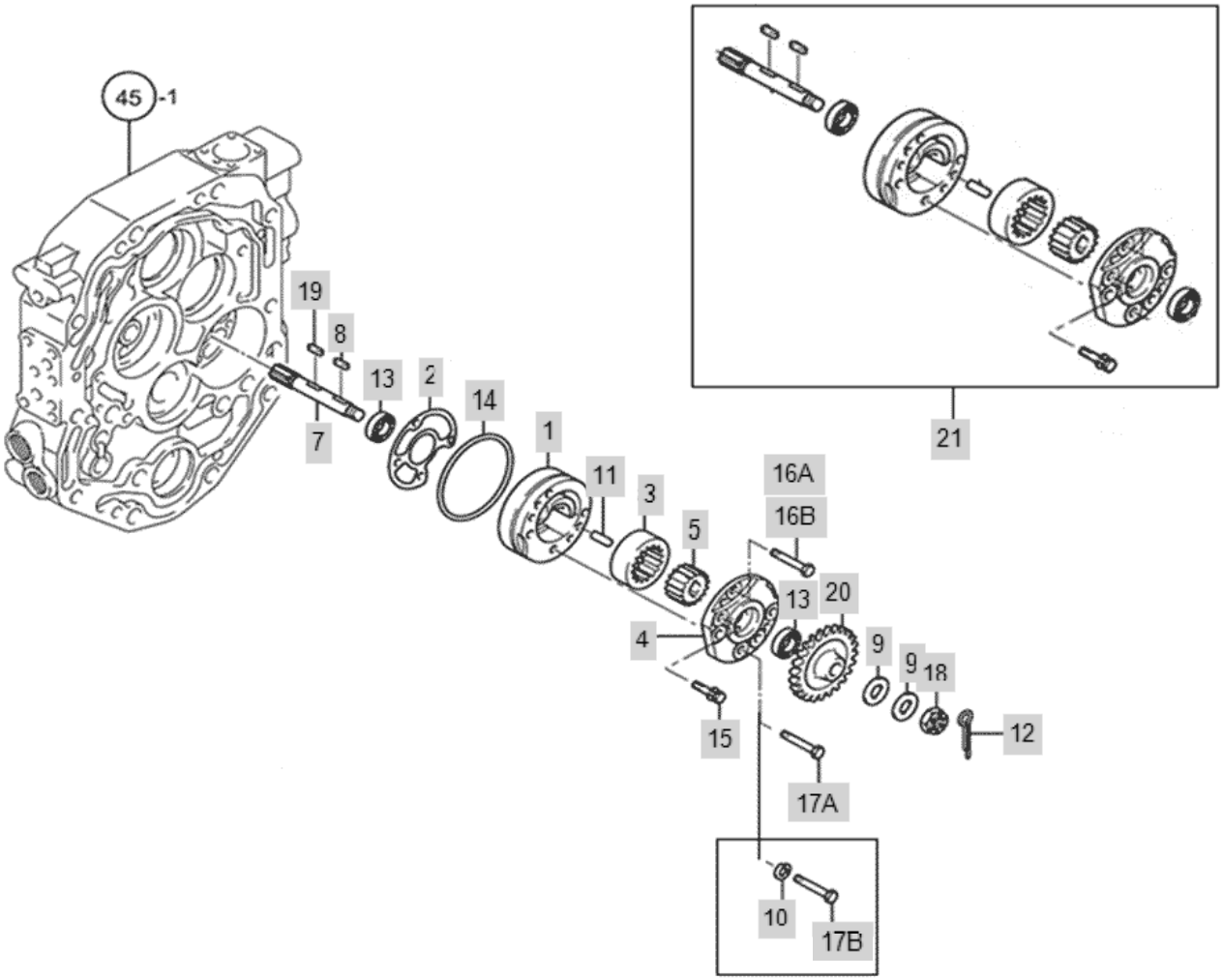

FIG S047 BRANSON 6530C	PTO PS PUMP	Year/Month 2020/02

KeyNo.	Part Number	Part Name	Quantity	Other
1	NSS		0	
2	FB47020000A4	PACKING P	0	
3	NSS		0	
4	NSS		0	
5	NSS		0	
7	NSS		0	
8	NSS		0	
9	22137-100000	WASHER, PLAIN (Φ 10)	0	
10	22217-060000	WASHER, SPRING (Φ 06)	0	
11	22312-060120	PIN, DOWEL (6-12)	0	
12	22417-250200	PIN , COTTER (2-20)	0	
13	24101-060014	BALLBEARING6001	0	
14	24341-000700	O-RING, FIX (Φ70)	0	
15	26013-060162	Bolt, Hexa (6-16)	0	
16A	26106-060402	FLANGEBOLT	0	
16B	26116-060402	HEXAGONBOLT	0	
17A	26106-060452	HEX FLANGE BOLT	0	
17B	26116-060452	HEXAGONBOLT	0	
18	26877-100002	FLUTEDNUT(LOWERTYPE)	0	
19	NSS		0	
20	FT47200000A3	DRIVEN GEAR	0	
21	TT47000000A9		0	

FIG S048 BRANSON 6530C	PTO REGULATOR	Year/Month 2020/02

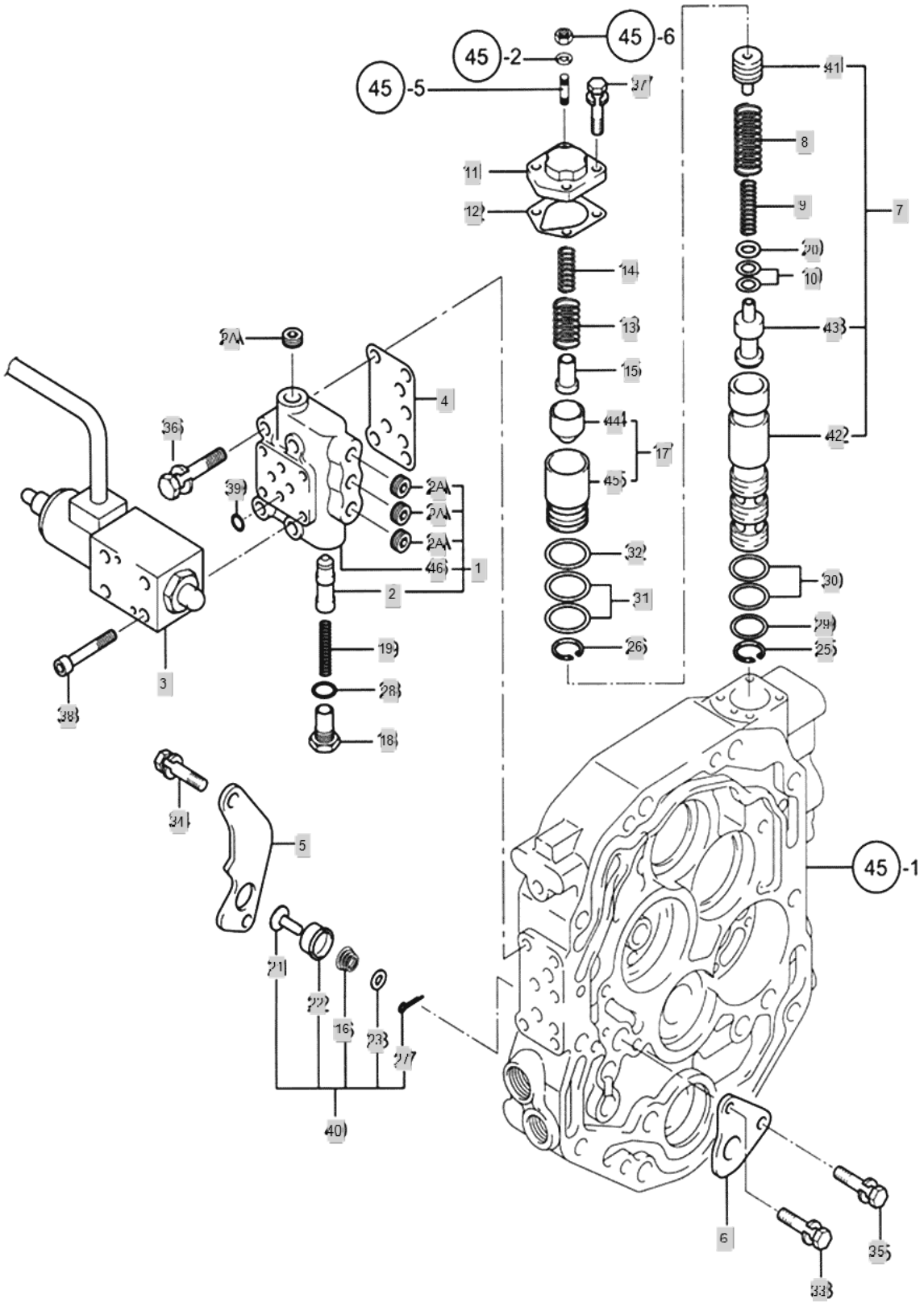

FIG S048 BRANSON 6530C	PTO REGULATOR	Year/Month 2020/02

KeyNo.	Part Number	Part Name	Quantity	Other
1	FT48010000A2	VALVE PLATE ASSY	1	
2	TT48020000A9		1	
2A	23871-010000	PLUG	4	
3	FT48030000A2	SOLENOID VALVE	1	
4	FB48040000A4	PACKING	1	
5	TT48050000A4	SPOOL PLATE(FRONT)	1	
6	TT48060000A4	SPOOL PLATE(REAR)	1	
7	FB48070000A9	DRV VALVE ASS'Y	1	
8	TT48080000A4		1	
9	FB48090000A4	SPRING	1	
10	TT48100000A4	SHIM0.5	2	
11	TT48110000A4	COVER, REGULATOR	1	
12	FB48120000A4	PACKING	1	
13	TT48130000A4	SPRING, REGULAT0R	1	
14	TT48140000A4	SPRING,INNER	1	
15	TT48150000A4	GUIDE, SPRING	1	
16	TT48160000A4		1	
17	TT48170000A9	REGULATOR ASSY	1	
18	TT48180000A4	PLUG,UNLOAD VALVE	1	
19	TT48190000A4	SPRING	1	
20	TT48200000A4	PACKING	5	
21	FB48210000A4	2ND RELEAF VALVE	1	
22	FB48220000A4	2ND RELEAF SEAT	1	
23	22117-060000	WASHER, PLAIN (Φ 06)	1	
25	22252-000180	RING, CIRCLIP (Φ 18)	1	
26	22252-000200	RING, CIRCLIP (Φ 20)	1	
27	22417-200100	PIN , COTTER (2-10)	1	
28	24311-000120	O-RING, DYNAMIC (Φ12)	1	
29	24341-000220	O-RING, FIX (Φ22)	1	
30	24341-000224	O-RING, FIX (Φ22.4)	2	
31	24341-000240	O-RING, FIX (Φ24)	2	
32	24341-000250	O-RING, FIX (Φ25)	1	
33	26013-060162	Bolt, Hexa (6-16)	1	
34	26013-080162	Bolt, Hexa (8-16)	2	
35	26013-080162	Bolt, Hexa (8-16)	1	
36	26013-080452	SCREW,CAPTIVEWASHERCAP	4	
37	26013-060182	Bolt, Hexa (6-18)	2	
38	26450-050452	CAP BOLT	4	
39	24315-000090	O-RING	4	
40	FB48400000A9	RELIEF VALVE ASS'Y	1	
41	TT48070011A4		1	
42	TT48070021A4		1	
43	TT48070031A4		1	
44	TT48170011A4		1	
45	TT48170021A4		1	

FIG S048 BRANSON 6530C	PTO REGULATOR	Year/Month 2020/02

KeyNo.	Part Number	Part Name	Quantity	Other
46	TT48010011A2		1	

FIG S051 BRANSON 6530C	OIL STRAINER	Year/Month 2020/02

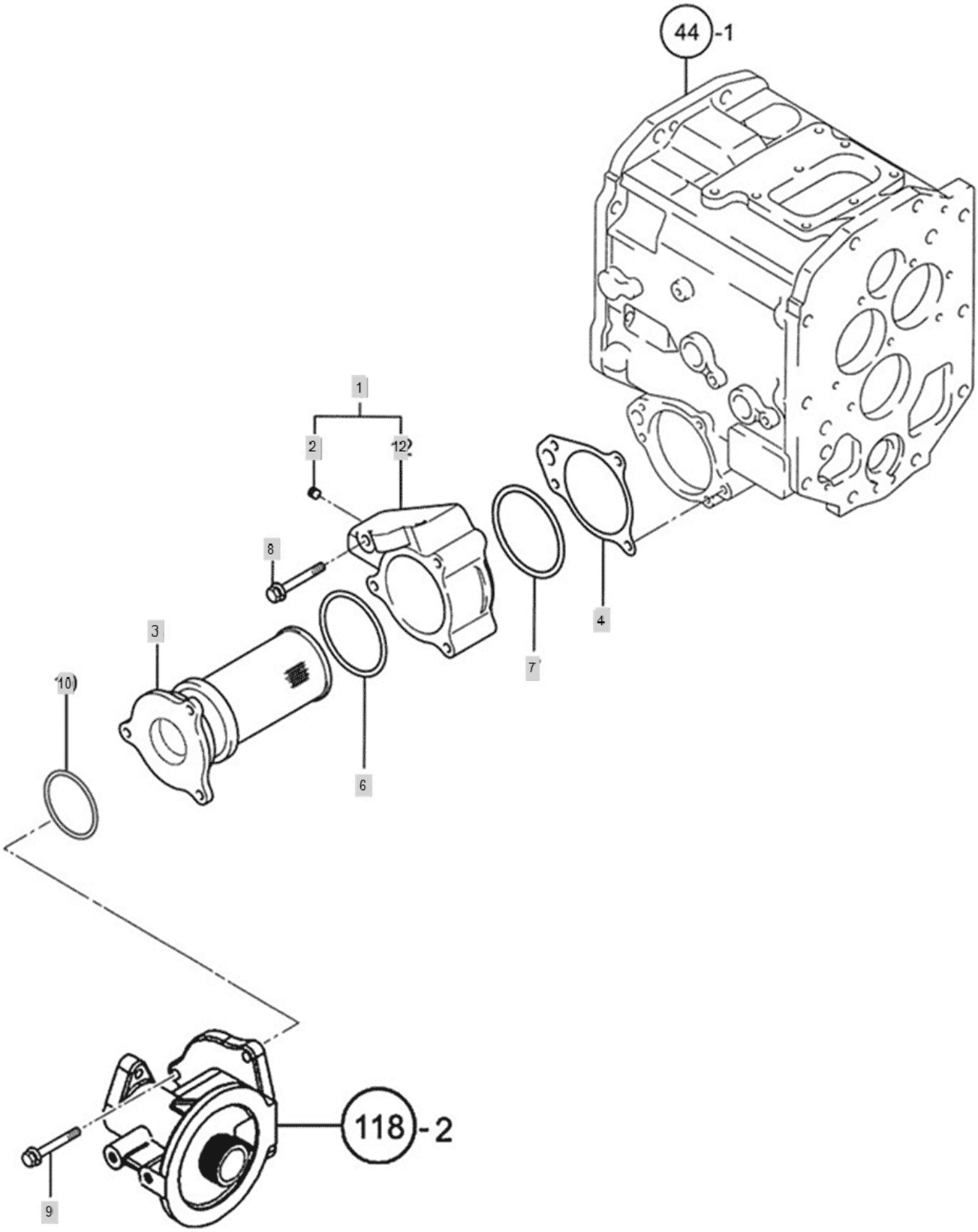

FIG S051 BRANSON 6530C	OIL STRAINER	Year/Month 2020/02

KeyNo.	Part Number	Part Name	Quantity	Other
1	FT51010000A9		1	
2	23871-030000	PLUG, PIPE	1	
3	FT51030000B3	STRAINER	1	
4	FB51040000A4	PACKING	1	
6	24321-000750	SEAL,ORING	1	
7	24321-000850	ORING(G85)	1	
8	26013-080552	SCREW,CAPTIVEWASHERCAP	1	
9	26013-080802	SCREW,CAPTIVEWASHERCAP	3	
10	24321-000450	O-RING, DYNAMIC (Φ45)	1	
12	FT51010011B3	SUPPORT ASS'Y, STRAINER	1	

FIG S053 BRANSON 6530C	SHUTTLE, 3-4	Year/Month 2020/02

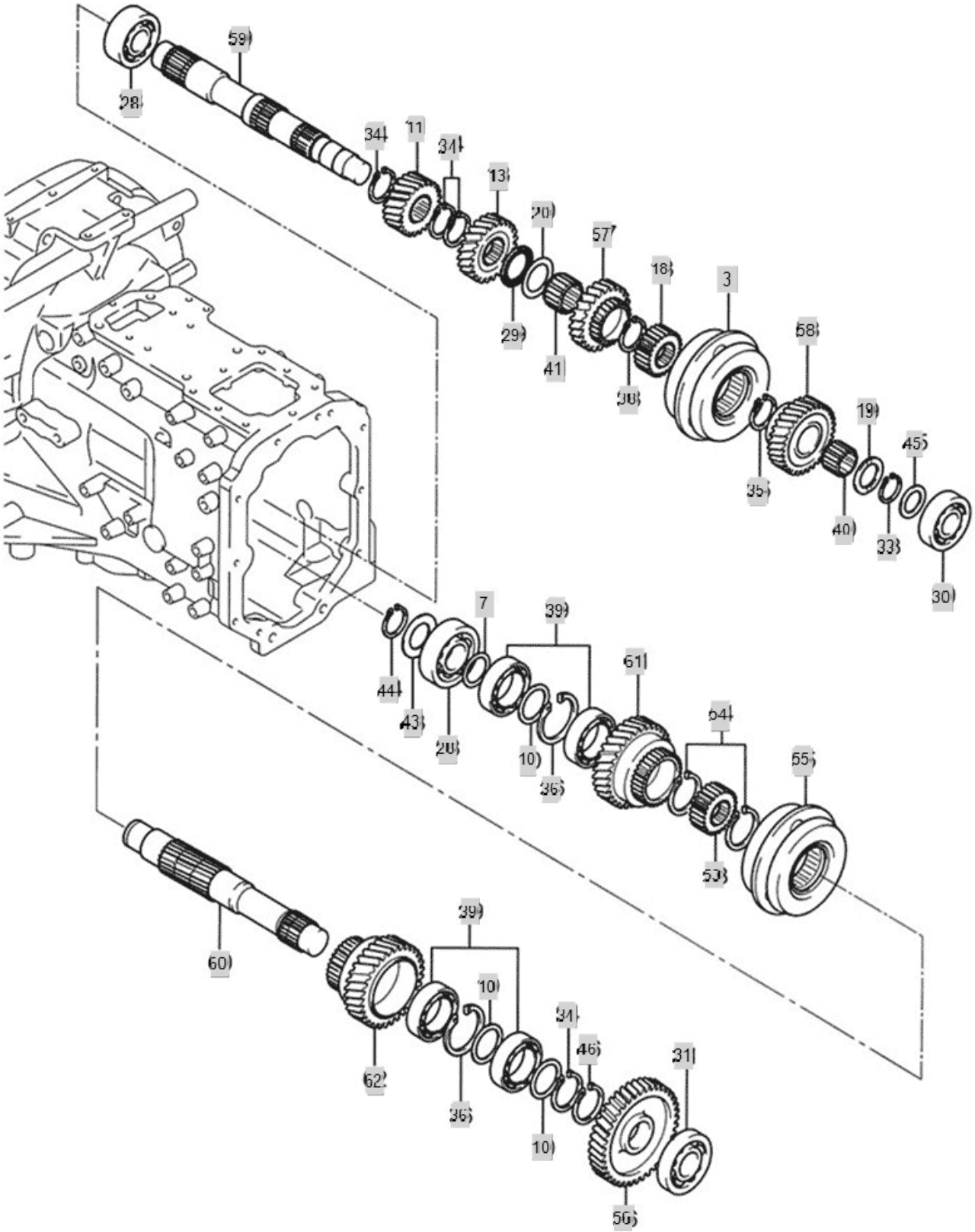

FIG S053 BRANSON 6530C	SHUTTLE, 3-4	Year/Month 2020/02

KeyNo.	Part Number	Part Name	Quantity	Other
3	TT52080000A2	SYNCHRO ASS'Y(1-3)	1	
7	TW53070000B4		1	
10	TT52120000B4	SPACER	3	
11	TW53110000A3	GEAR 20T,COUNTER	1	
13	TW53130000A3	GEAR 25T, COUNTER	1	
18	TW53180000A3	SPLINE SLEEVE	1	
19	TW53190000B4		1	
20	TW53200000B4		1	
28	TT52150000A4	BEARING	2	
29	TT57120000A4	NEEDLE BEARING	1	
30	CT85150000A4	Bearing #6305	1	
31	TT52170000A4	BEARING	1	
33	22242-000280	SNAP RING, SHAFT (Φ 28)	1	
34	22242-000350	SNAP RING, SHAFT (Φ 35)	4	
35	22242-000500	SNAP RING, SHAFT (Φ50)	2	
36	22252-000620	RING, CIRCLIP (Φ 62)	2	
38	22292-000320	RING, CIRCLIP (Φ 32)	2	
39	24101-060074	Bearing, Ball (#6007)	4	
40	24161-283317	NEEDLE BEARING	1	
41	24161-323717	NEEDLE BEARING	1	
43	TT52260000B4		1	
44	22242-000300	SNAP RING, SHAFT (Φ 30)	1	
45	TW53450000B4	WASHER (25X37X2)	1	
46	22242-000340	SNAP RING, SHAFT (Φ 34)	1	
53	TT52100000A4	SISLEEVE	1	
54	22292-000400	RING, CIRCLIP (Φ 40)	2	
55	TT52090000A2	SYNCHRO ASS'Y(2-R)	1	
56	FT53560000A4	MAIN GEAR	1	
57	FT53570000B3	MAIN CHANGE GEAR 26T	1	
58	FT53580000B3	GEAR 4, MAIN SHIFT	1	
59	FT53590000A3	MAIN SHAFT(3-4)	1	
60	FT53600000A3	MAIN SHAFT	1	
61	FT53610000A3	GEAR 31T,SHUTTLE	1	
62	FT53620000A3	GEAR 36T, SHUTTLE	1	

FIG S055 BRANSON 6530C	SHUTTLE, 1-2	Year/Month 2020/02

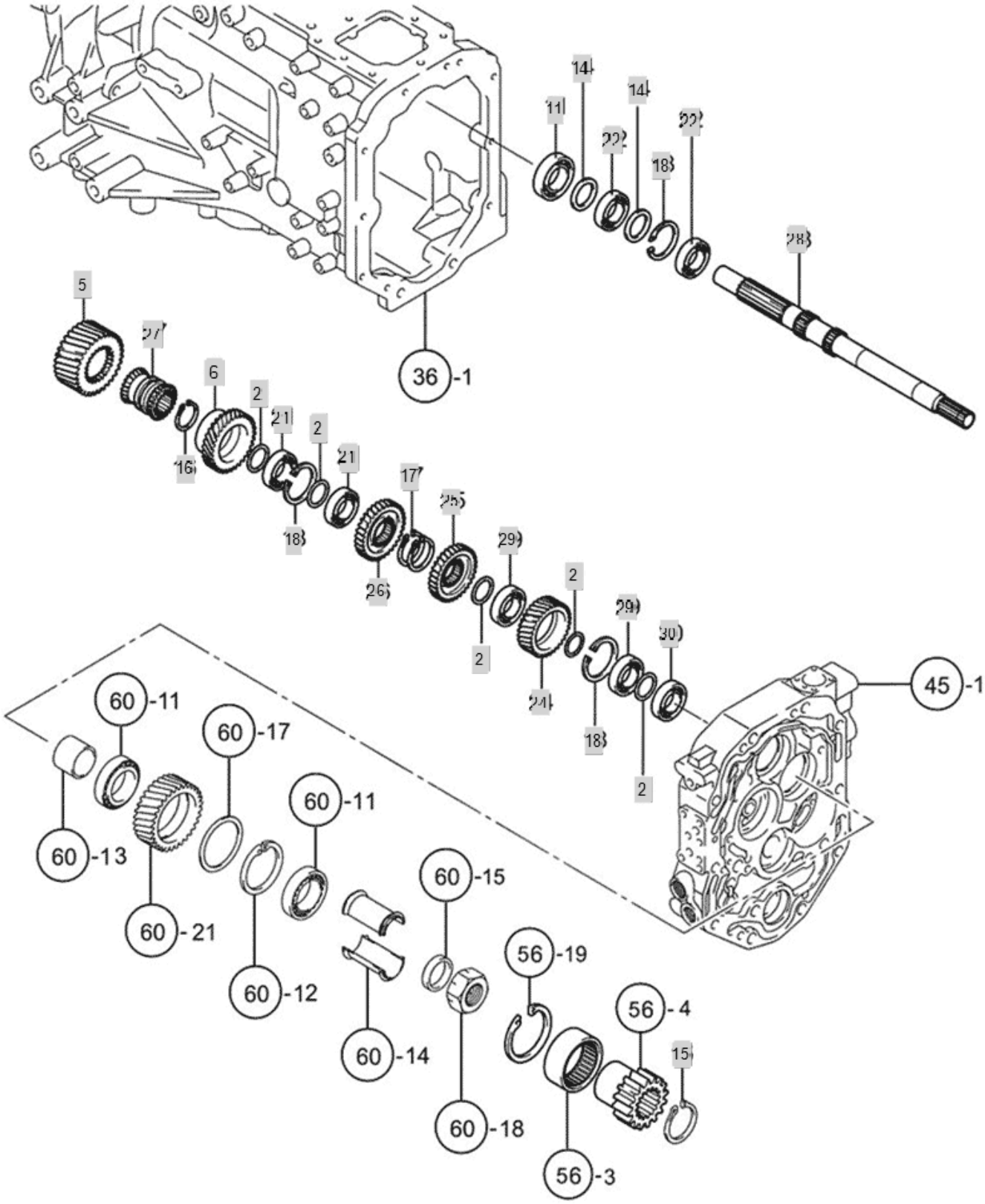

FIG S055 BRANSON 6530C	SHUTTLE, 1-2	Year/Month 2020/02

KeyNo.	Part Number	Part Name	Quantity	Other
2	TT52120000B4	SPACER	5	
5	TW55050000A3	FIRST GEAR, MAIN SHIFT	1	
6	TW55060000A3	SECOND GEAR, MAIN SHIFT	1	
11	TT52150000A4	BEARING	1	
14	TT61070000B4	spacer	2	
15	22242-000290	SNAP RING, SHAFT (Φ29)	1	
16	22242-000340	SNAP RING, SHAFT (Φ 34)	1	
17	22242-000400	SNAP RING, SHAFT (Φ 40)	2	
18	22252-000620	RING, CIRCLIP (Φ 62)	3	
21	24101-060074	Bearing, Ball (#6007)	2	
22	24101-062064	BALL BEARING (#6206)	2	
24	FT55240000A3	COUNT GEAR 30T	1	
25	FT55250000B3	THIRD GEAR	1	
26	FT55260000B3	GEAR 30T	1	
27	FT55270000A3	SHIFTER	1	
28	FT55280000G2	MAIN SHAFT (1-2)	1	
29	FT55290000A4	BEARING	2	
30	FT55300000A4	BEARING	1	

FIG S056 BRANSON 6530C	CREEP GEAR	Year/Month 2020/02

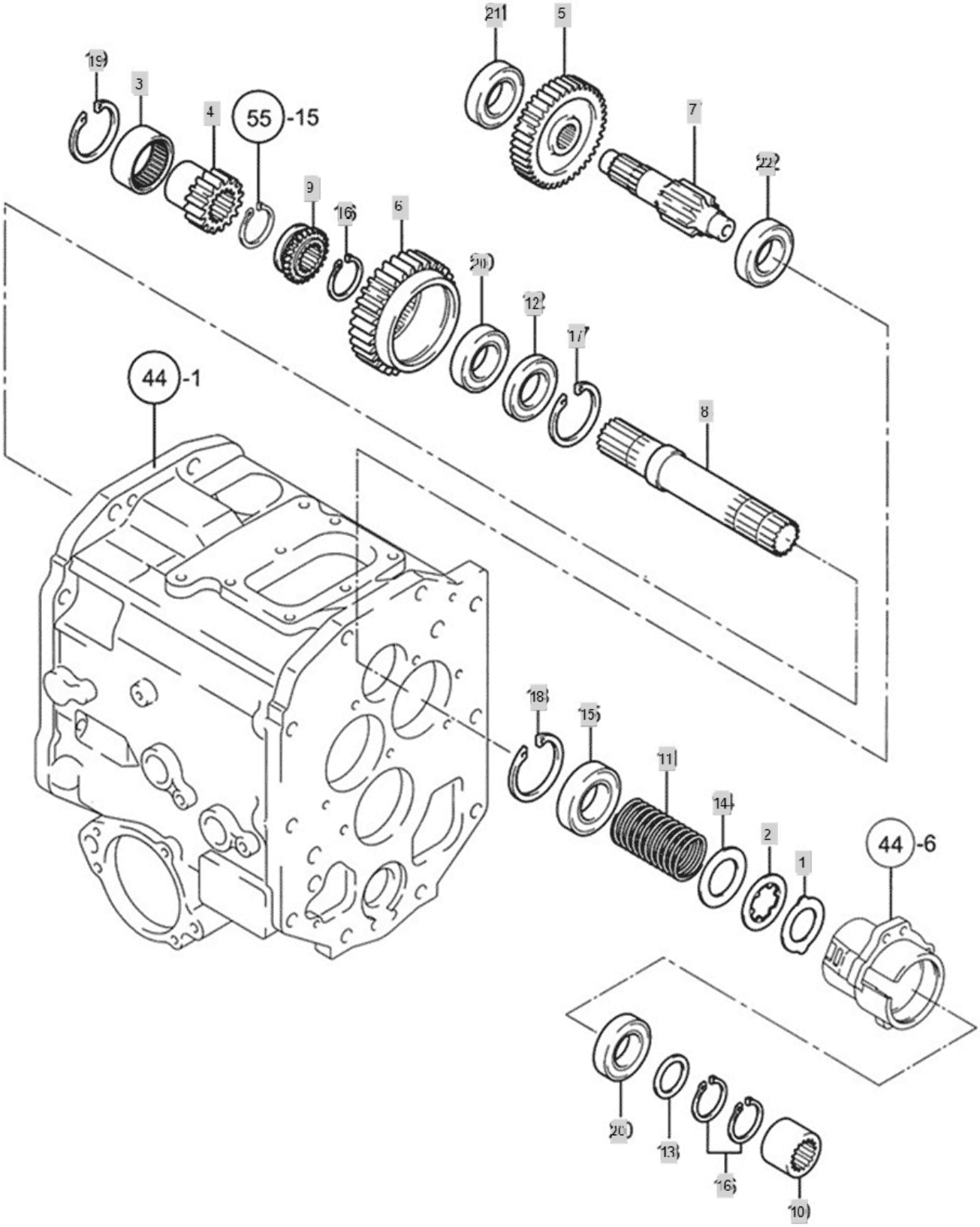

FIG S056 BRANSON 6530C	CREEP GEAR	Year/Month 2020/02

KeyNo.	Part Number	Part Name	Quantity	Other
1	TT56010000A4	PLATE	1	
2	TT56020000A4	FRICTION PLATE	1	
3	TT56030000A4	NEEDLE BEARING	1	
4	FT56040000A4	PINION,LOW SPEED	1	
5	FT56050000A4	GEAR37T, LOW SPEED	1	
6	FT56060000A3	IDLE GEAR34T, LOW SPEED	1	
7	FT56070000A3	IDLE SHAFT, LOW SPEED	1	
8	FT56080000A3	CONNECTING SHAFT	1	
9	FT56090000A4	SHIFTER	1	
10	TT56100000A4	COUPLING	1	
11	TT56110000A4	SPRING	1	
12	TT56120000A4	BEARING	1	
13	TT39080000B4	SPACER	1	
14	TT56140000B4		1	
15	TT52160000A4	BEARING	1	
16	22242-000290	SNAP RING, SHAFT (Φ29)	3	
17	22252-000550	RING, CIRCLIP (Φ 55)	1	
18	22252-000621	RING, CIRCLIP (Φ 62)	1	
19	22262-000480	RING, CIRCLIP (Φ 48)	1	
20	24101-060064	Bearing, Ball (#6006)	2	
21	24101-062044	Bearing, Ball (#6204)	1	
22	24101-063044	BALL BEARING	1	

FIG S057 BRANSON 6530C	COUNTER SHAFT	Year/Month 2020/02

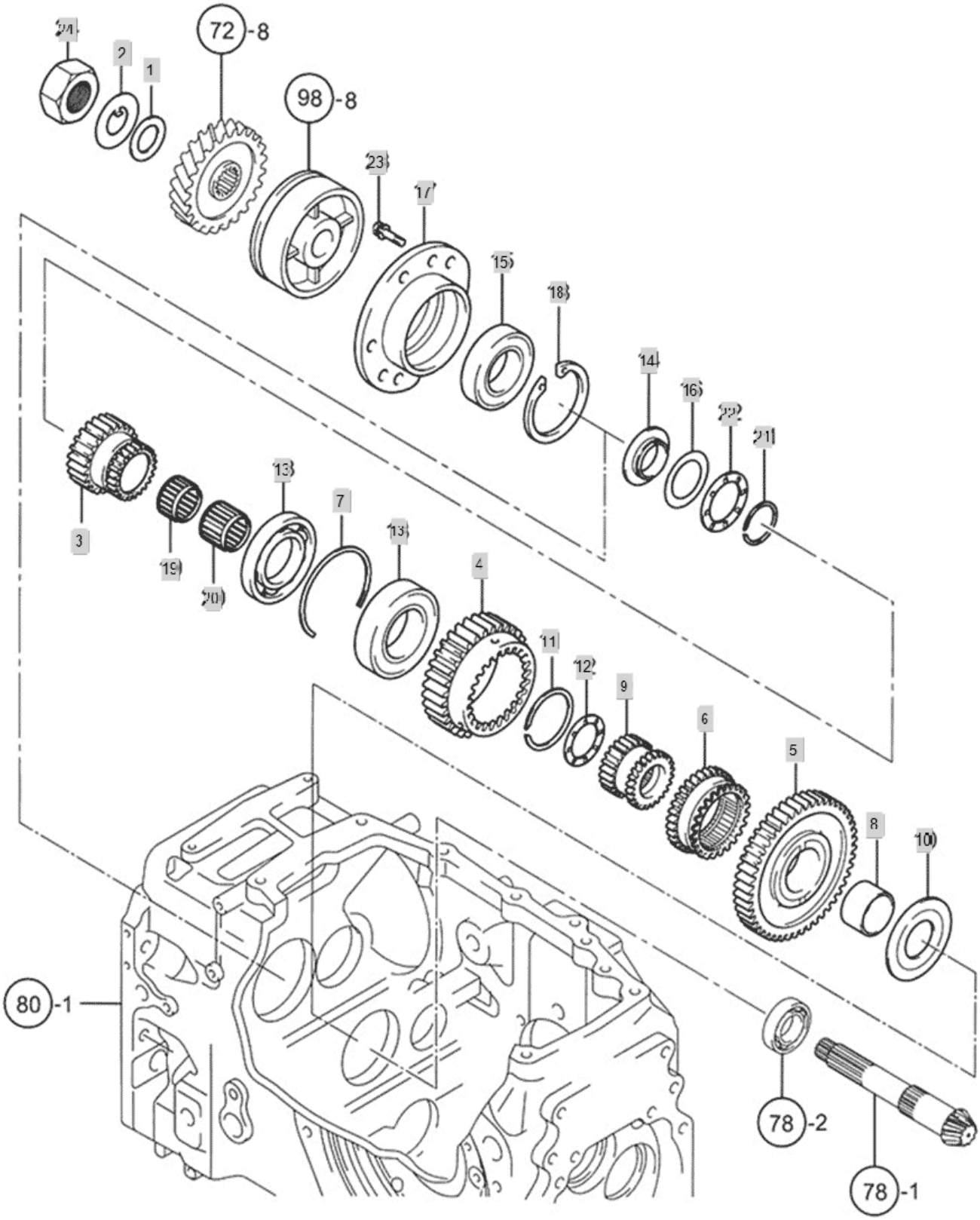

FIG S057 BRANSON 6530C	COUNTER SHAFT	Year/Month 2020/02

KeyNo.	Part Number	Part Name	Quantity	Other
1	TT57010000A4	LINER	1	
2	TT57020000A4	WASHER	1	
3	TT57030000A3	COUNTER GEAR	1	
4	TT57040000A3	COUNTER GEAR	1	
5	TT57050000A3	COUNTER GEAR	1	
6	TT57060000A3	SHIFTER	1	
7	TT57070000A4	SNAPRING	1	
8	TT57080000A4		1	
9	TT57090000B4	SPLINE COLLAR	1	
10	TT57100000B4	WASHER,THRUST	1	
11	TT57110000A4	SNAP RING	1	
12	TT57120000A4	NEEDLE BEARING	1	
13	TT16130000A4	BEARING	2	
14	TT57140000A4	COLLAR, THRUST	1	
15	TT57150000A4	BEAR TM306	1	
16	TT57160000A4	THRUST COLLAR	1	
17	TT57170000A3	BEARING RETAINER -> TT57170000B3	1	
18	22252-000720	RING, CIRCLIP (Φ 72)	1	
19	24161-323717	NEEDLE BEARING	1	
20	24161-323727	NEEDLE BEARING	1	
21	24164-000352	STOP RING	1	
22	24166-355202	NEEDLE BEARING	1	
23	FB39180000A4	SCREW,CAPTIVE WASHER CAP	5	
24	26777-240002	HEX NUT	1	

FIG S058 BRANSON 6530C	SUB CHANGE SHAFT	Year/Month 2020/02

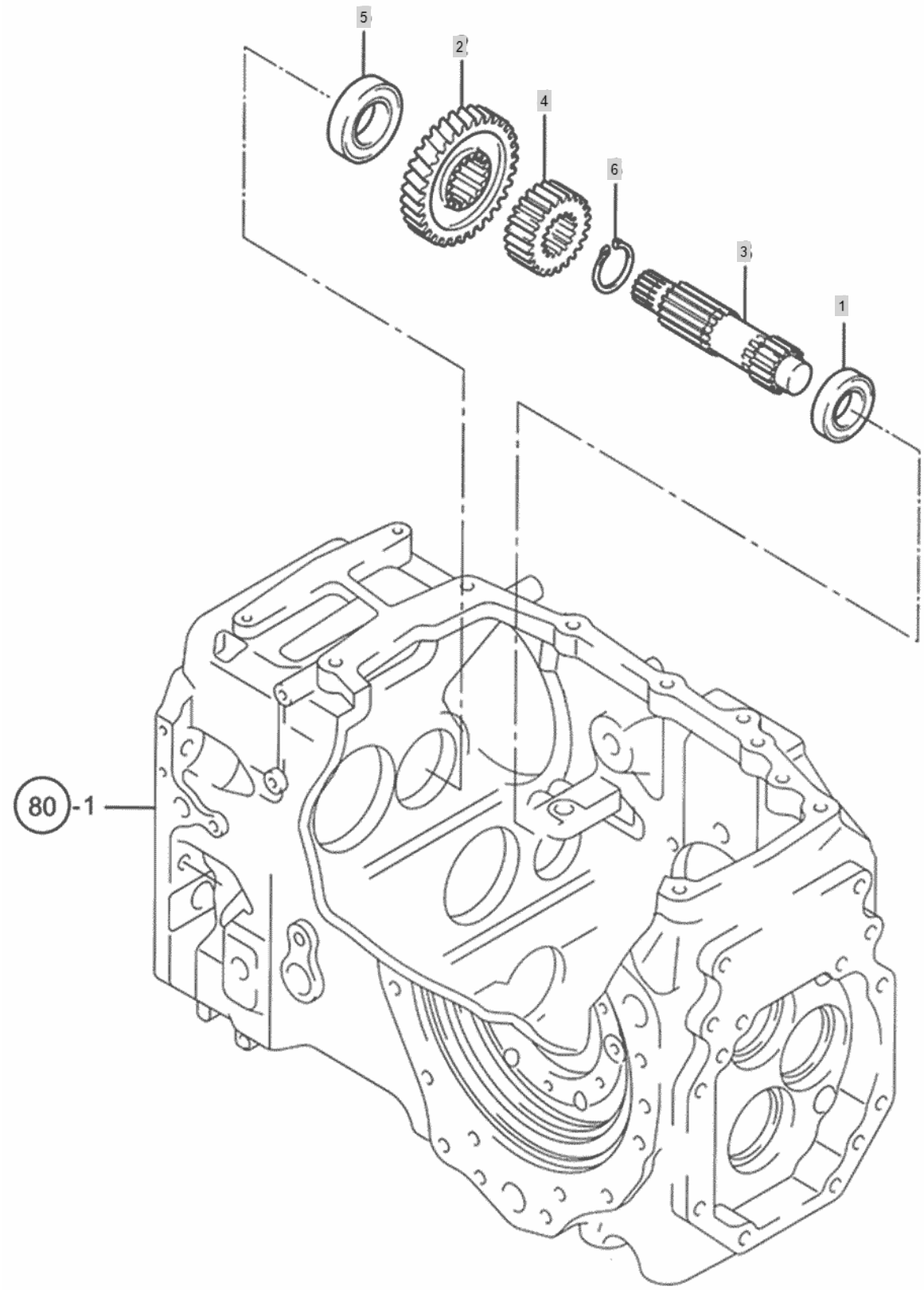

FIG S058 BRANSON 6530C	SUB CHANGE SHAFT	Year/Month 2020/02

KeyNo.	Part Number	Part Name	Quantity	Other
1	TT58010000A4	BALL BEARING (6205HL)	1	
2	TT58020000A4	SPEED REDUCTION GEAR	1	
3	TT58030000A3	SPEED REDUCTION SHAFT	1	
4	TT58040000A4	SPEED REDUCTION GEAR	1	
5	TT39090000A4	BALLBEARINGTMB206	1	
6	22242-000340	SNAP RING, SHAFT (Φ 34)	1	

FIG S060 BRANSON 6530C	PTO DRIVE SHAFT	Year/Month 2020/02

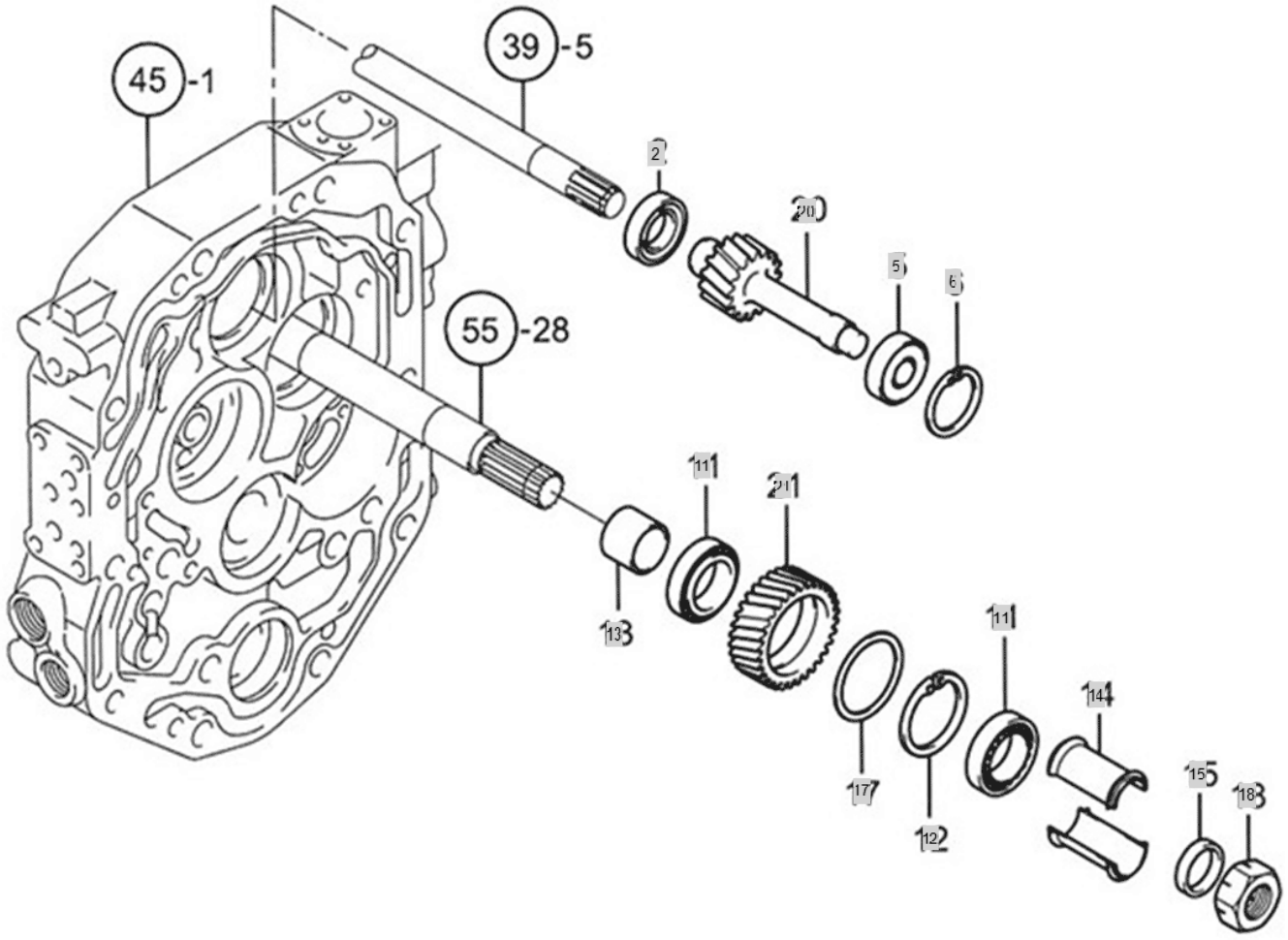

FIG S060 BRANSON 6530C	PTO DRIVE SHAFT	Year/Month 2020/02

KeyNo.	Part Number	Part Name	Quantity	Other
2	TT52160000A4	BEARING	1	
5	TT60050000A4	BEARING	1	
6	22252-000500	RING, CIRCLIP (Φ 50)	1	
11	TB19080000A4	BEARING,TAPERROLLER	2	
12	22252-000621	RING, CIRCLIP (Φ 62)	1	
13	FT60130000A4	COLLAR	1	
14	FT60140000A4	COLLAR	2	
15	FT60150000C4	COLLAR	1	
17	FT60170000A4	WASHER	1	
18	FT60190000A4	Lock Nut(M35X1.5)	1	
20	FT60200000A3	OINION SHAFT,PTO	1	
21	FT60210000A3	IDLE GEAR	1	

FIG S061 BRANSON 6530C	SHAFT, PTO CLUTCH	Year/Month 2020/02

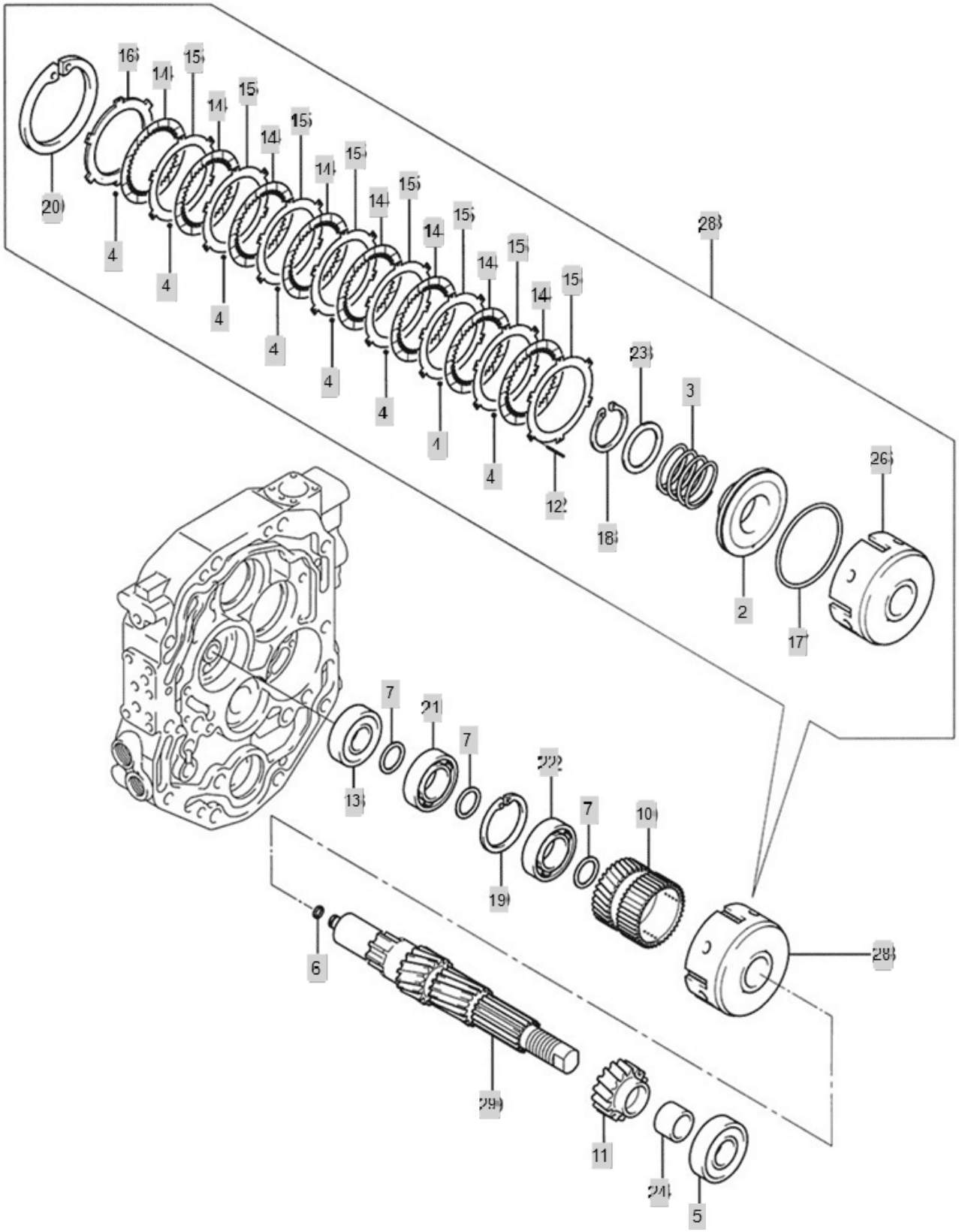

FIG S061 BRANSON 6530C	SHAFT, PTO CLUTCH	Year/Month 2020/02

KeyNo.	Part Number	Part Name	Quantity	Other
2	FT61020000B4	PISTON,CLUTCH	1	
3	TT61030000A4		1	
4	TT61040000A4	SPRING	48	
5	TT52150000A4	BEARING	1	
6	TT61060000A4	SEAL RING	1	
7	TT61070000B4	spacer	3	
10	FB61100000A3	GEAR 30T,CLUTCH	1	
11	FT61110000A4	3RD PINION GEAR, PTO	1	
12	FB61120000A4	PIN	6	
13	TT57150000A4	BEAR TM306	1	
14	FB61140000A3	FRICTION PLATE	8	
15	TT61150000A3	PLATE	8	
16	TT61160000A3	PLATE	1	
17	TT61170000A3	D-RING	1	
18	22242-000500	SNAP RING, SHAFT (Φ50)	1	
19	22252-000620	RING, CIRCLIP (Φ 62)	1	
20	22252-001100	RING, CIRCLIP (Φ110)	1	
21	24101-062064	BALL BEARING (#6206)	1	
22	24104-062064	BALLBEARING	1	
23	TT61230000A4	SPRING RETAINER	1	
24	FT61240000A4	COLLAR	1	
26	FB61260000A3	PTO CLUTCH CYLINDER(8)	1	
28	FB61280000A9	PTO CLUTCH ASSY(8)	1	
29	FB61290000A2	SHAFT,PTO CLUTCH	1	

FIG S062 BRANSON 6530C	PTO SHAFT	Year/Month 2020/02

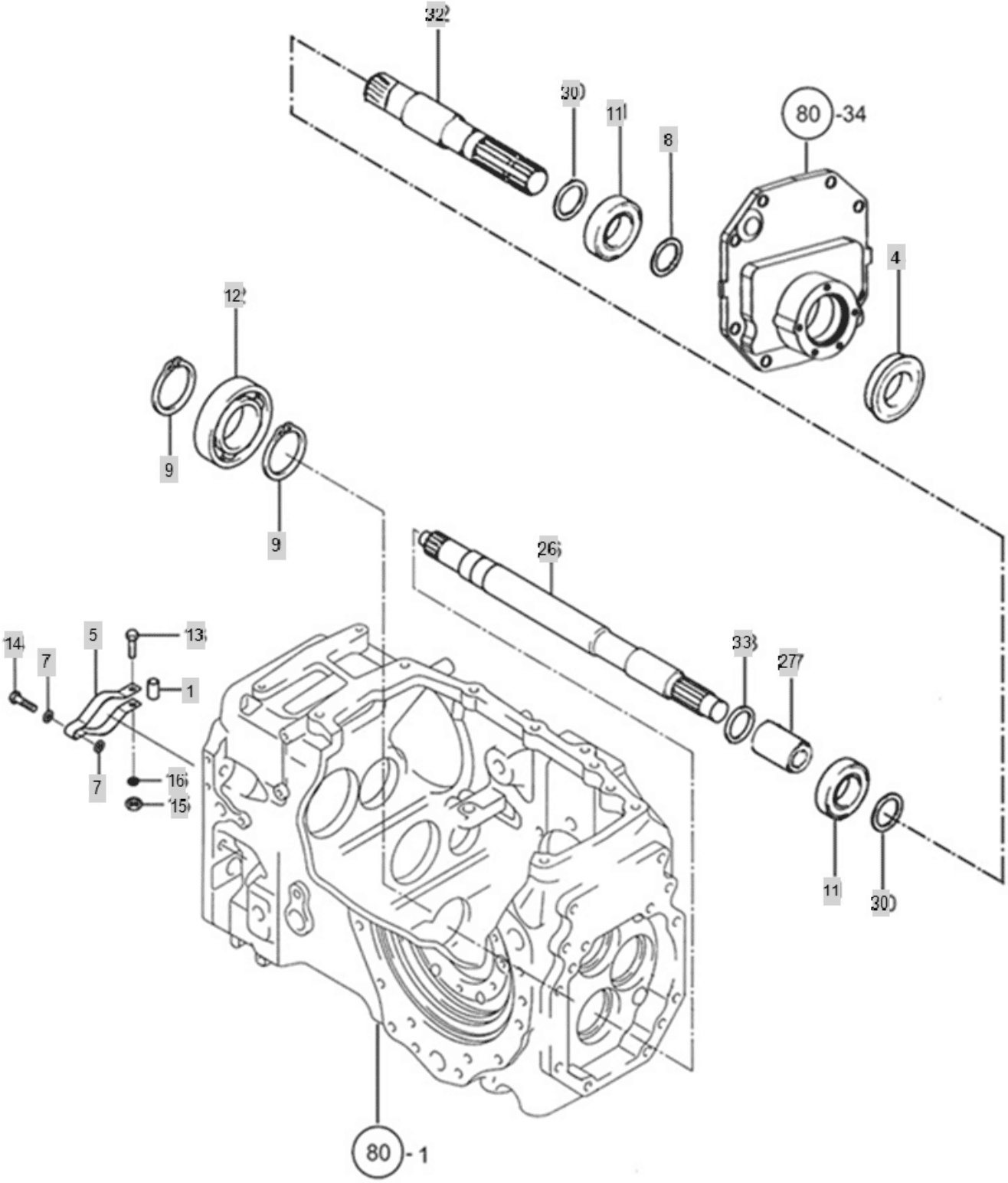

FIG S062 BRANSON 6530C	PTO SHAFT	Year/Month 2020/02

KeyNo.	Part Number	Part Name	Quantity	Other
1	TT62010000A4	COLLAR	1	
4	TT62040000A3	PTO OIL SEAL QLF35X60X19	1	
5	TT62050000A4	SPRING, PLATE	1	
7	22157-080000	WASHER, PLAIN (Φ 08)	2	
8	FB62080000A4	SPACER	1	
9	22242-000400	SNAP RING, SHAFT (Φ 40)	2	
11	TCA6010000A3	BEARING	2	
12	24101-063084	BALL BEARING #6308	1	
13	26116-060302	HEX BOLT	1	
14	26116-080302	HEXAGONHEADEDBOLT	1	
15	26347-060002	NUT6	1	
16	22217-060000	WASHER, SPRING (Φ 06)	1	
26	FT62260000B2	CONNECTING SHAFT,PTO	1	
27	FT62270000A4	SPLINE COLLAR	1	
30	TT62030000B4		2	
32	FB62280000A3	SHAFT, PTO	1	
33	TT52120000B4	SPACER	1	

FIG S063 BRANSON 6530C	PTO COUNTER SHAFT	Year/Month 2020/02

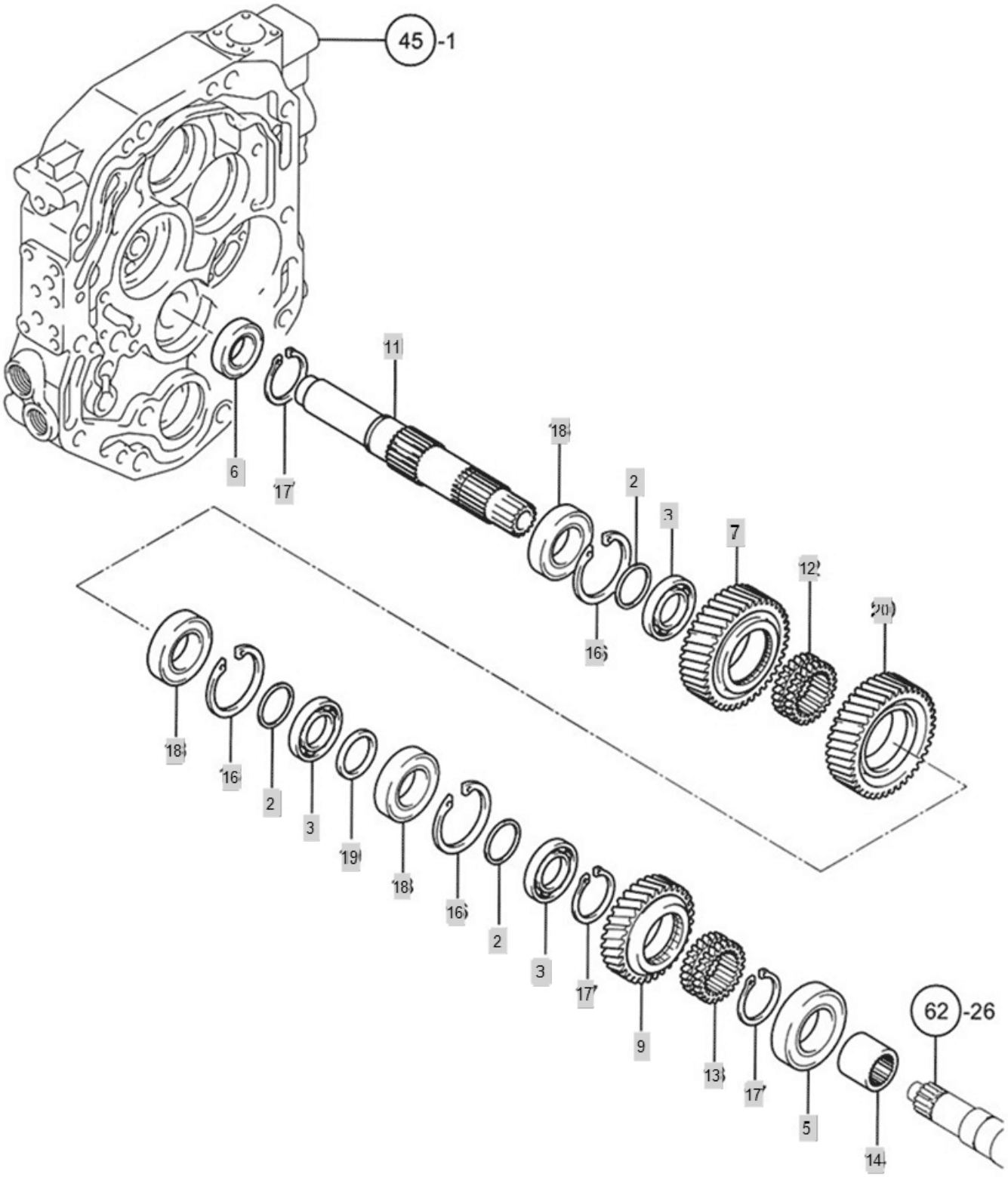

FIG S063 BRANSON 6530C	PTO COUNTER SHAFT	Year/Month 2020/02

KeyNo.	Part Number	Part Name	Quantity	Other
2	TT63020000B4		3	
3	TT63030000A4	BEARING	3	
5	TT63050000A4	BEARING	1	
6	TT52160000A4	BEARING	1	
7	FB63070000A3	PTO GEAR 39T	1	
9	FT63090000A3	PTO GEAR 31T	1	
11	FT63110000B3	PTO DRIVEN SHAFT	1	
12	TT63120000A3	SHIFTER 1-2	1	
13	TT63130000A3	SHIFTER 3	1	
14	TT63140000A4	COUPLING	1	
16	22252-000680	RING, CIRCLIP (Φ 68)	3	
17	22292-000400	RING, CIRCLIP (Φ 40)	3	
18	24101-060084	BEARING	3	
19	FT63190000A4	SPACER	1	
20	FT63200000A3	PTO GEAR 38T	1	

FIG S064 BRANSON 6530C	PTO BRAKE	Year/Month 2020/02

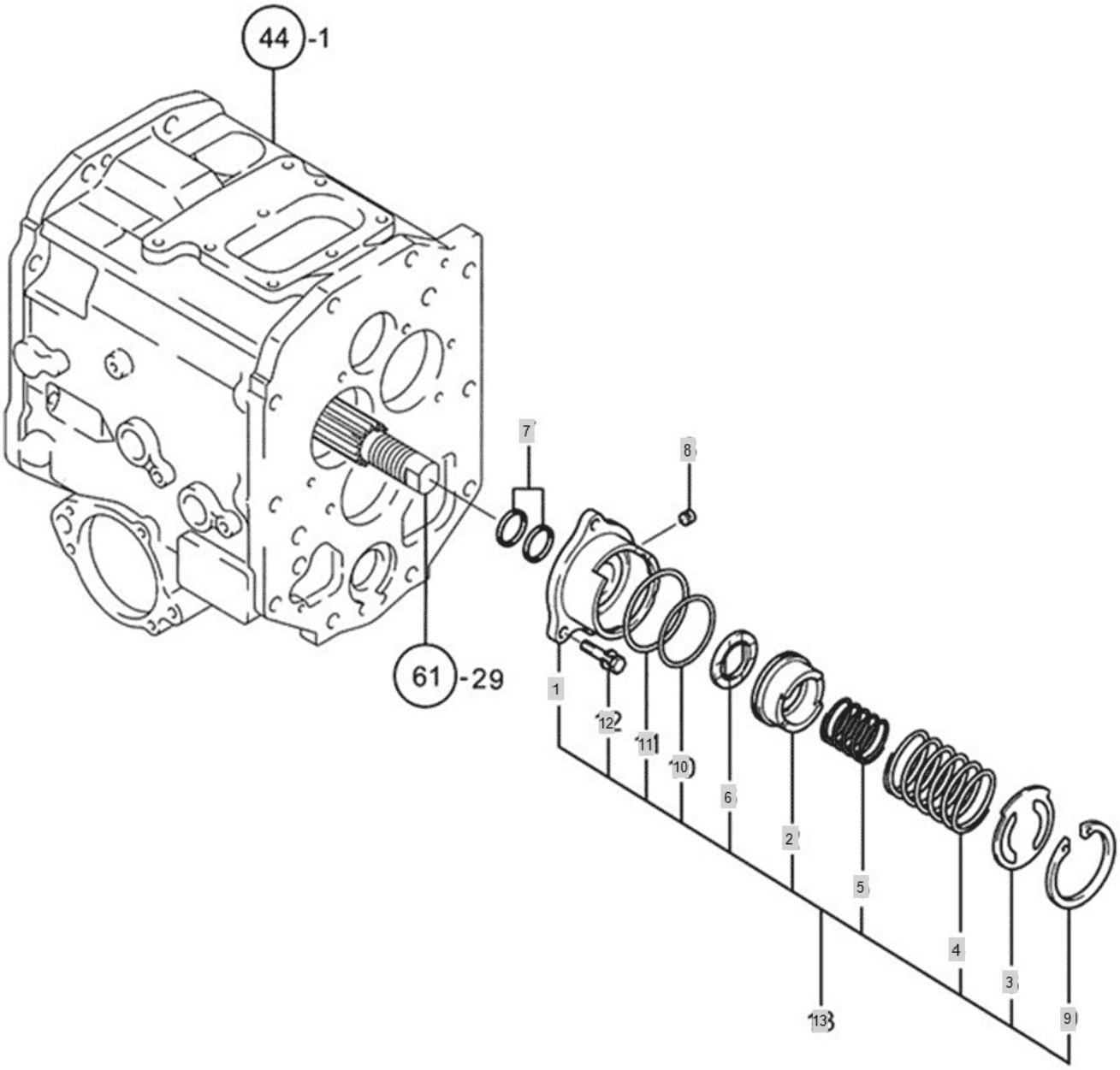

FIG S064 BRANSON 6530C	PTO BRAKE	Year/Month 2020/02

KeyNo.	Part Number	Part Name	Quantity	Other
1	TT64010000A3	CASE,PTO BRAKE	1	
2	TT64020000A4	PISTON	1	
3	TT64030000A4	PLATE	1	
4	TT64040000B4	SPRING, PTO BRAKE	1	
5	TT64050000B4	SPRING	1	
6	TT64060000B4	Brake	1	
7	TT64070000A4	SEAL RING	2	
8	TT64080000A4	RETAININGSCREWM7X1	1	
9	22252-000651	RING, CIRCLIP (Φ 65)	1	
10	24341-000480	O-RING, FIX (Φ48)	1	
11	24341-000560	O-RING, FIX (Φ56)	1	
12	26013-080252	Bolt, Hexa (8-25)	3	
13	FT64130000B3	PTOBrakeAss'y	1	

FIG S066 BRANSON 6530C	SHUTTLE, MAIN SHIFT	Year/Month 2020/02

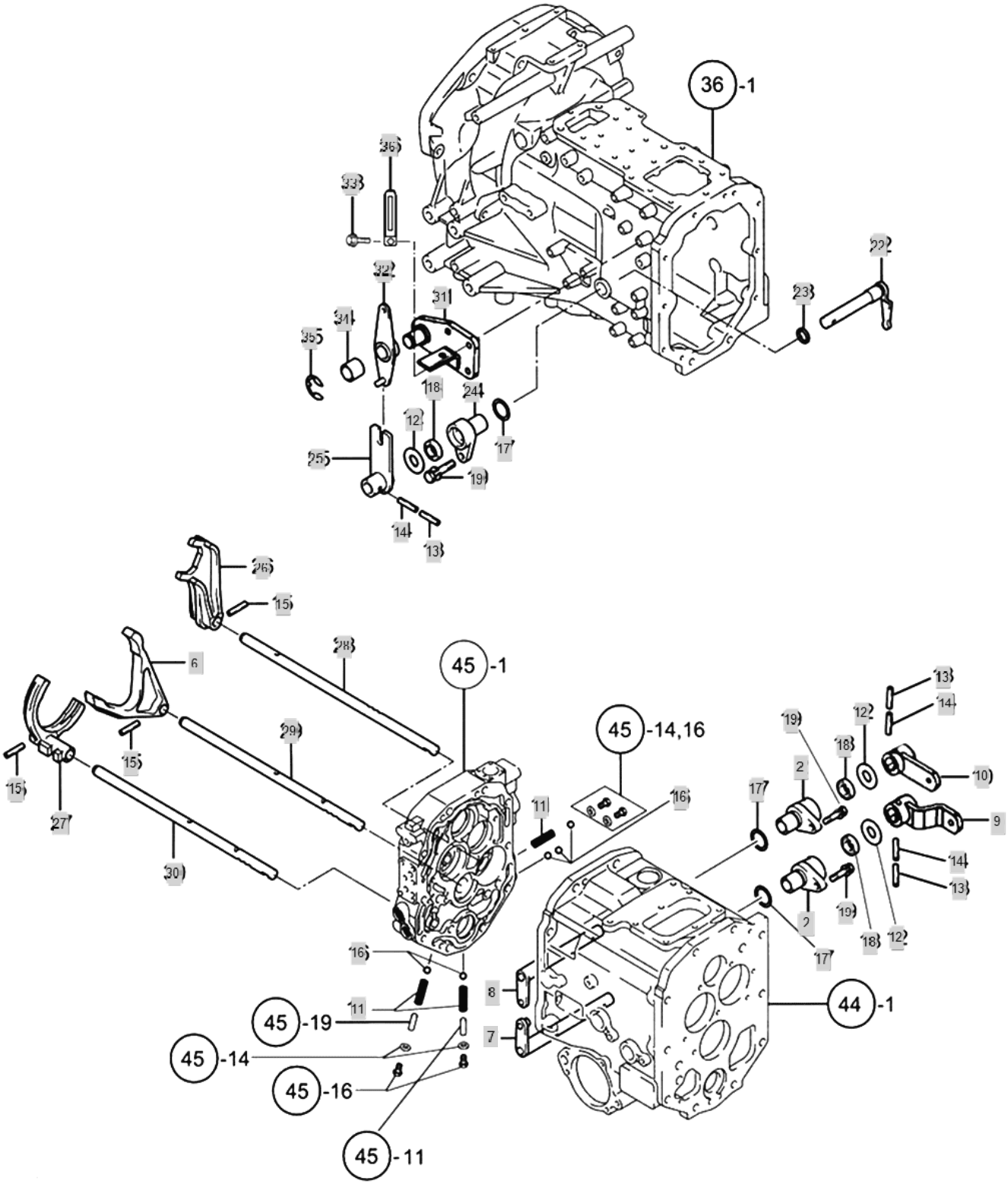

FIG S066 BRANSON 6530C	SHUTTLE, MAIN SHIFT	Year/Month 2020/02

KeyNo.	Part Number	Part Name	Quantity	Other
2	TT70100000A4	SHIFTERARMHOLDER	2	
6	TW66060000B3	MAIN SHIFT FORK3-4	1	
7	FB66070000A4	SHIFTER ARM(3-4)	1	
8	FB66080000A4	SHIFTER ARM (1-2)	1	
9	FB66090000A4	MAIN SHIFT ARM (3-4)	1	
10	FB66100000A4	MAIN SHIFT ARM(1-2)	1	
11	TT42020000A4	SPRING	3	
12	TT65120000A4	COLLARB	3	
13	22351-035032	PIN, SPRING (3.5-32)	3	
14	22351-060032	PIN, SPRING (6-32)	3	
15	22351-060032	PIN, SPRING (6-32)	3	
16	24190-100001	Ball, Steel (5/16)	5	
17	24311-000210	O-RING, DYNAMIC (Φ21)	3	
18	24421-173007	Seal, Oil (#17-30-07)	3	
19	26013-080252	Bolt, Hexa (8-25)	3	
22	TW66220000A4	SHIFT ARM, SHUTTLE	1	
23	TW66230000A4	SHUTTLE COLLAR	1	
24	TW66240000A4	HOLDER, SHIFT ARM	1	
25	FB66250000A3	SHUTTLE ARM	1	
26	FT66260000B3	MAIN SHIFT FORK 1-2	1	
27	FT66270000A2	SHUTTLE FORK	1	
28	FT66280000A3	SHAFT, MAIN SHIFT FORK1-2	1	
29	FT66290000A3	SHAFT,MAIN SHIFT FORK3-4	1	
30	FT66300000A3	SHAFT, SHUTTLE FORK	1	
31	FT66310000C4	SHAFT,SHUTTLE LINK	1	
32	FB66320000A3	Shuttle Link	1	
33	26106-080202	SQR FLANGE BOLT	3	
34	TT36020000A4	BUSH20X26X22	1	
35	22272-000150	RING, CIRCLIP (Φ 15)	1	
36	TT80180000A4	Clamp, B	1	

FIG S067 BRANSON 6530C	LEVER, MAIN SHIFT	Year/Month 2020/02

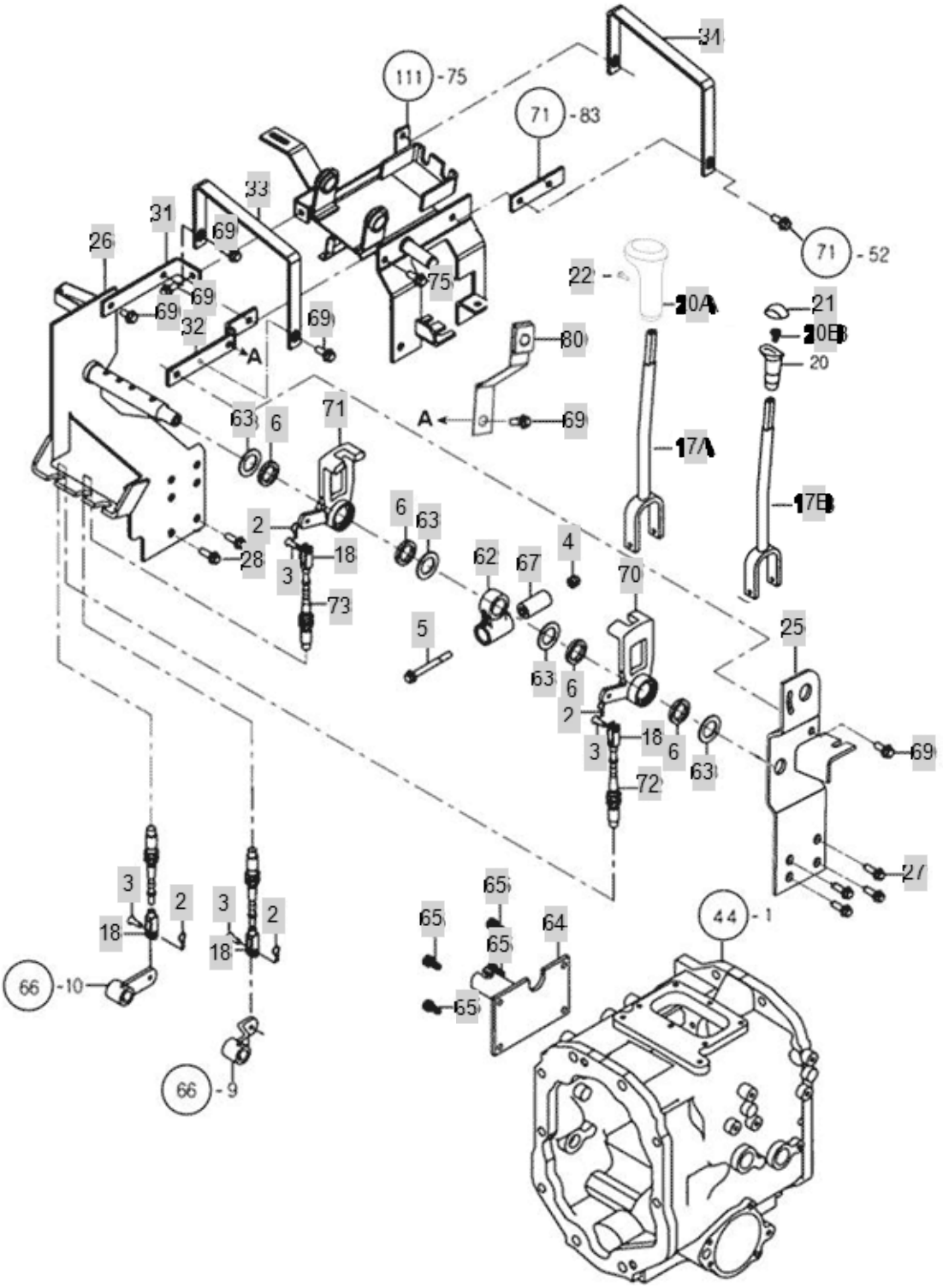

FIG S067 BRANSON 6530C	LEVER, MAIN SHIFT	Year/Month 2020/02

KeyNo.	Part Number	Part Name	Quantity	Other
2	RR51230000A4	SNAP PIN	4	
3	22487-100200	PIN, HEAD (10-20)	4	
4	26341-080002	U-NUT	1	
5	26106-080752	SCREW,HEXFLANGEHEADCAP	1	
6	24430-253505	Seal, Oil (#25-35-05)	4	
17A	FB67170000C3	MAIN SHIFT LEVER	1	
17B	FB67170000B3	MAIN SHIFT LEVER	1	
18	TW43030000A4	SUTTLE CLEVIS A	4	
20A	TA00015789A	LEVER, MAIN SHIFT	1	
20B	FT67200100A2	KNOB,RANGESHIFTLEVER	1	
21	FB69010200A2	Cap	1	
22	26023-040162	SCREW	1	
25	FB67250000A2	Ass'y Bracket Shift Fixing(L)	1	
26	FB67260000B2	ASS'Y BRACKET SHIFT FIXING(R)	1	
27	26106-100252	SCREW,HEXFLANGEHEADCAP	4	
28	26106-100202	HEX BOLT, (10-20)	2	
31	FB67310000A4	Joint Bracket	1	
32	FB67320000A4	Joint Bracket	1	
33	FB67330000A4	Bracket	1	
34	FB67340000A4	Bracket(Rear)	1	
62	NT67620000A4	HOLDER,MAINSHIFTLEVER	1	
63	NT67630000A4	WASHER	4	
64	FB67640000B3	MAIN SHIFT CABLE BRACKET ASSY	1	
65	26013-080162	Bolt, Hexa (8-16)	4	
67	FT67670000A4	RUBBERSPRING	1	
69	26106-080162	SCREW,HEXFLANGEHEADCAP	5	
70	FB67700000A3	Main Shift Arm(1-2)	1	
71	FB67710000A3	Main Shift Arm(3-4)	1	
72	FB67720000B3	Cable Main Shift(1-2)	1	
73	FB67730000B3	CABLE MAIN SHIFT(3-4)	1	
75	26106-080162	SCREW,HEXFLANGEHEADCAP	2	
80	FB67800000A4	BRACKET	1	

FIG S069 BRANSON 6530C	LEVER, SUB SHIFT	Year/Month 2020/02

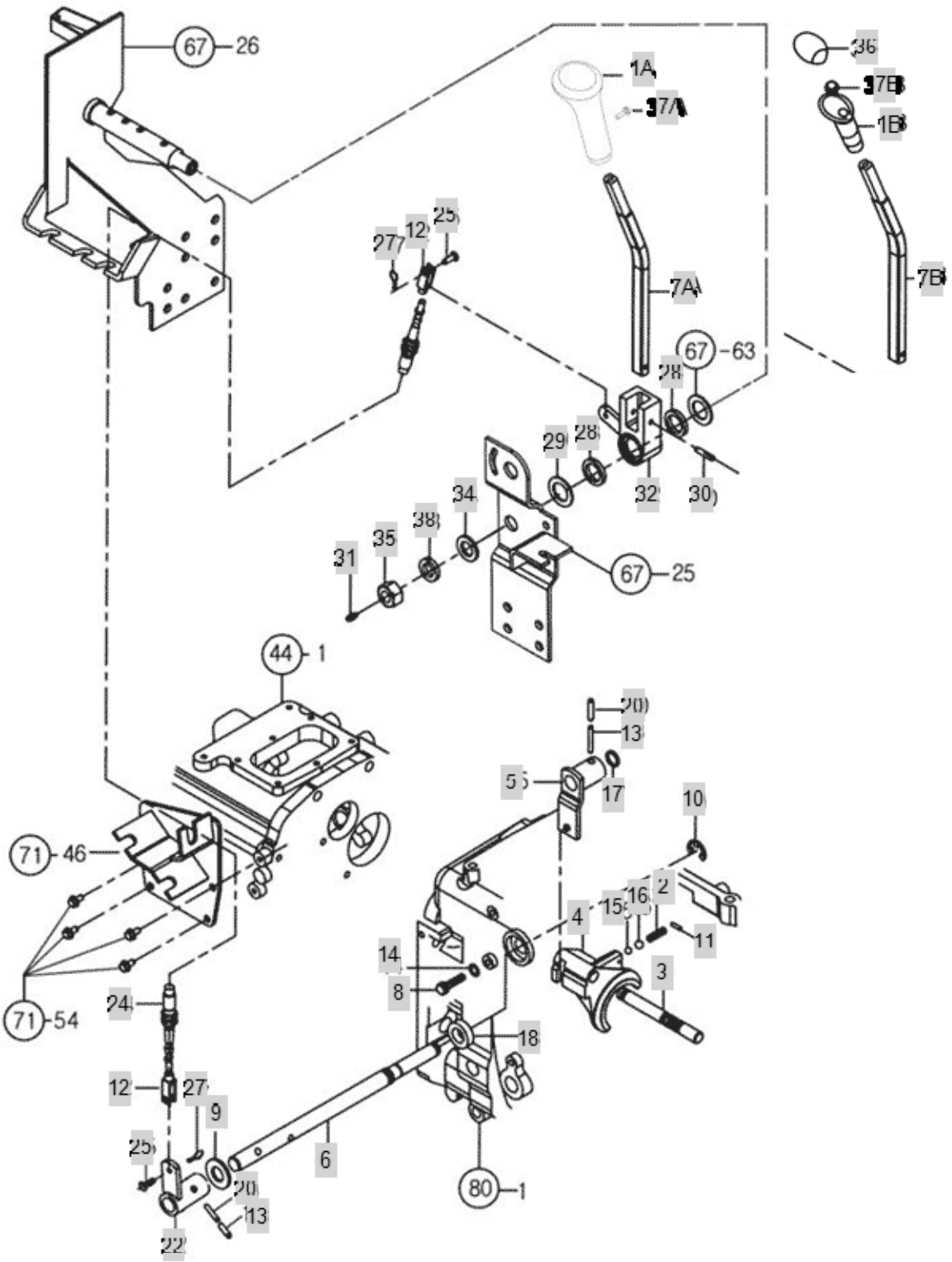

FIG S069 BRANSON 6530C	LEVER, SUB SHIFT	Year/Month 2020/02

KeyNo.	Part Number	Part Name	Quantity	Other
1A	TA00015793A	LEVER, SUB SHIFT	1	
1B	FT67200100A2	KNOB,RANGESHIFTLEVER	1	
2	TT42020000A4	SPRING	1	
3	TT69030000A4	SHAFT, FORK	1	
4	TT69040000A3	FORK, SUB SHIFT	1	
5	TT69050000A4	ARM, SHIFT	1	
6	FT69060000A3	SHAFT, SUB SHIFT	1	
7A	FB69070000B3	SECOND SHIFT LEVER	1	
7B	FB69070000A3	Second Shift Lever	1	
8	TT69080000A4	BOLT	1	
9	TT69090000B4	COLLAR	1	
10	22272-000150	RING, CIRCLIP (Φ 15)	1	
11	22351-030018	PIN, SPRING (3-01)	1	
12	TW43030000A4	SUTTLE CLEVIS A	2	
13	22351-080040	PIN, SPRING (8-40)	2	
14	23414-080000	WASHER, PLAIN (Φ8)	1	
15	24190-080001	BALL,STEEL	1	
16	24190-100001	Ball, Steel (5/16)	1	
17	24311-000160	O-RING, DYNAMIC (Φ16)	1	
18	24421-203507	OIL SEAL (TC203507)	1	
20	22351-050040	PIN, SPRING (5-04)	2	
22	FB69220000A4	SUB SHIFT ARM	1	
24	FB69240000B3	Sub Shift Cable	1	
25	22487-100200	PIN, HEAD (10-20)	2	
27	RR51230000A4	SNAP PIN	2	
28	24430-253505	Seal, Oil (#25-35-05)	2	
29	NT67630000A4	WASHER	1	
30	22351-060045	PIN, SPRING (6-45)	1	
31	24764-020000	GREASENIPPLE	1	
32	FB69320000A3	Second Shift Arm	1	
34	22117-180000	WASHER, PLAIN (Φ 18)	1	
35	26716-180002	NUT	1	
36	FB69010200A2	Cap	1	
37A	26023-040162	SCREW	1	
37B	26106-060122	HEX BOLT (6-12)	1	
38	22217-180000	WASHER, SPRING (Φ 18)	1	

FIG S070 BRANSON 6530C	CREEP LEVER	Year/Month 2020/02

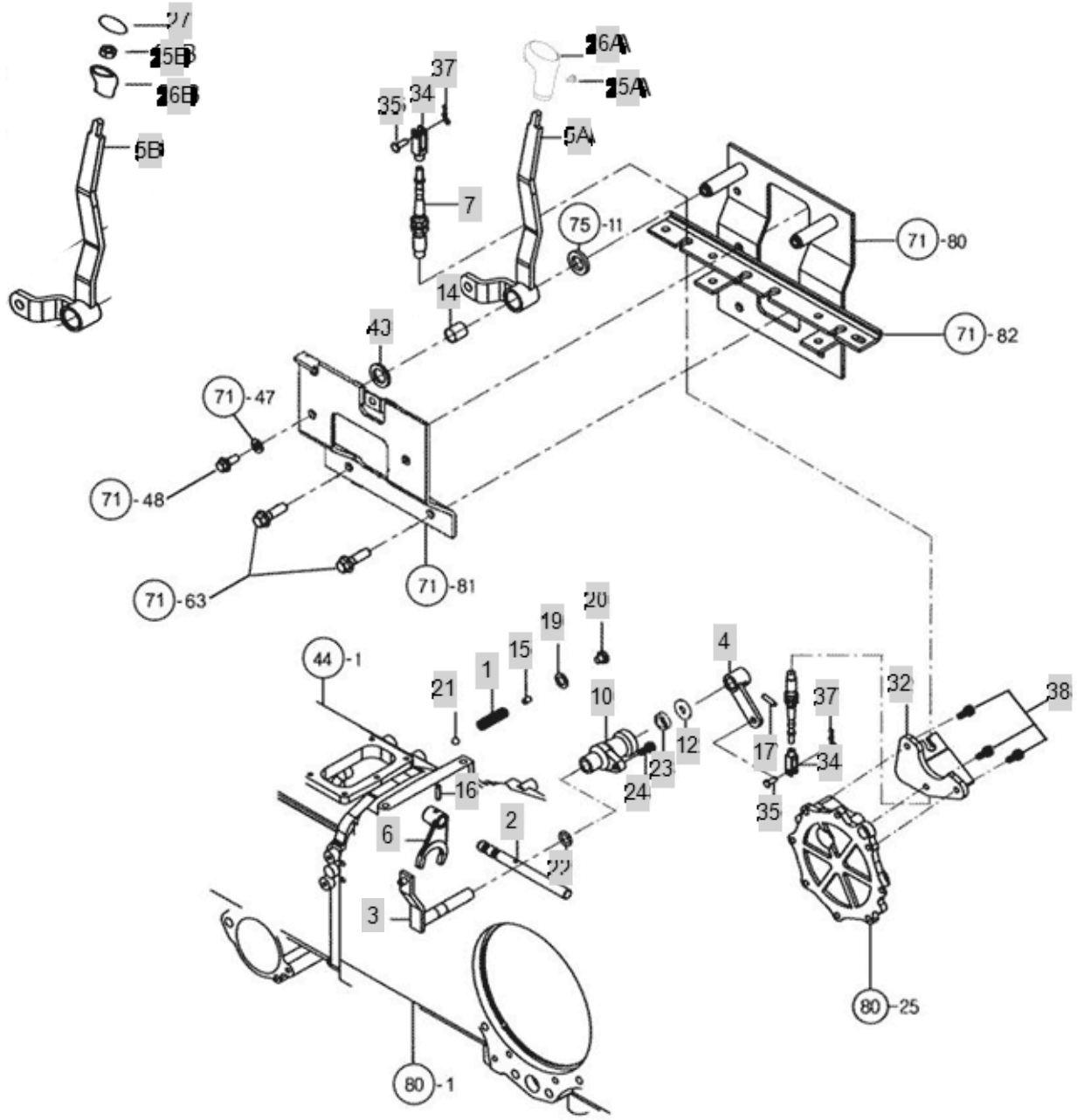

FIG S070 BRANSON 6530C	CREEP LEVER	Year/Month 2020/02

KeyNo.	Part Number	Part Name	Quantity	Other
1	TT42020000A4	SPRING	1	
2	FT70020000B4	SHAFT,LOW-SPEED FORK	1	
3	FT70030000A4	ARM, HIGH-SPEED	1	
4	FT70040000D4	SHIFT ARM, CREEP	1	
5A	FB70050000B3	CREEP LEVER	1	
5B	FB70050000A3	Creep Lever	1	
6	TT70060000A3	FORK, CREEP	1	
7	FB70070000A3	Front Wheel Drive Cable	1	
10	TT65010000A4	HOLDER, SHIFT ARM	1	
12	TT65120000A4	COLLARB	1	
14	24550-018250	DRYBUSH	1	
15	22312-080120	PIN, DOWEL (8-12)	1	
16	22351-060025	PIN, SPRING (6-25)	1	
17	22351-060032	PIN, SPRING (6-32)	1	
19	23414-100000	PLAIN WASHER (D10)	1	
20	23887-100002	SCREW,HEXAGONHEADCAP	1	
21	24190-100001	Ball, Steel (5/16)	1	
22	24311-000210	O-RING, DYNAMIC (Φ21)	1	
23	24421-173007	Seal, Oil (#17-30-07)	1	
24	26013-080252	Bolt, Hexa (8-25)	1	
25A	26023-040102	SCREW W/WASHER	1	
25B	26716-080002	NUT,HEX (D8)	1	
26A	TA00015814A	KNOB, CREEPER	1	
26B	THB5307000A4	KNOB	1	
27	THB5305000A4	INSERT(KNOBCAP)	1	
32	FB70320000A3	CABLE BRACKET ASSY	1	
34	TW43030000A4	SUTTLE CLEVIS A	2	
35	22487-100200	PIN, HEAD (10-20)	2	
37	RR51230000A4	SNAP PIN	2	
38	26013-080202	Bolt, Hexa (8-20)	3	
43	FBB1760000A4	Collar	1	

FIG S071 BRANSON 6530C	PTO SHIFT	Year/Month 2020/02

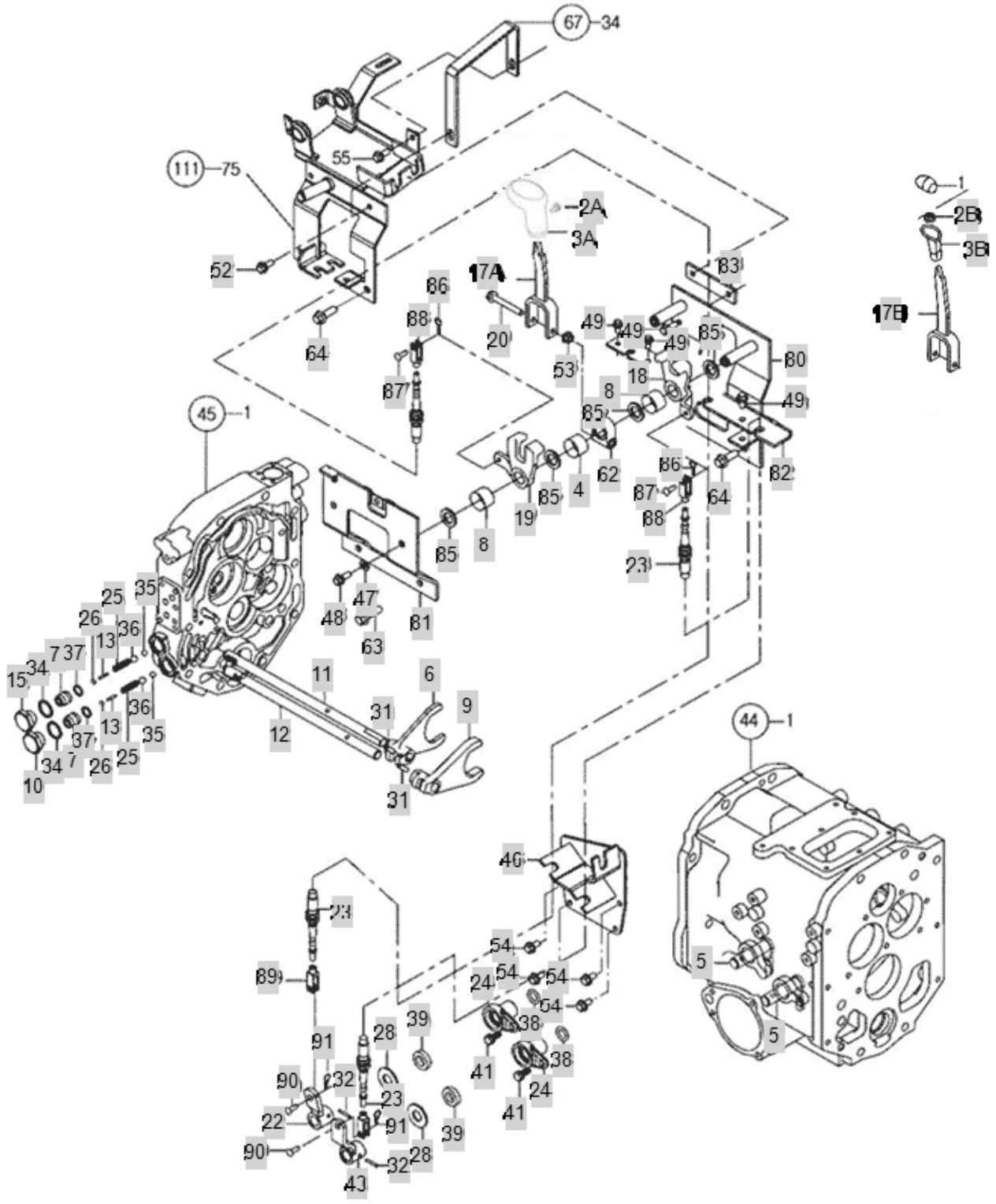

FIG S071 BRANSON 6530C	PTO SHIFT	Year/Month 2020/02

KeyNo.	Part Number	Part Name	Quantity	Other
A	THB5305000A4	INSERT(KNOBCAP)	1	
2A	26023-040102	SCREW W/WASHER	1	
2B	26716-080002	NUT,HEX (D8)	1	
3A	TA00015833A	KNOB, PTO SHIFT	1	
3B	THB5307000A4	KNOB	1	
4	24550-018150	DRY BUSH	1	
5	TT71050000A4	ARM, PTO SHIFT	2	
6	TT71060000A3	FORK(PTO1-2)	1	
7	TT71070000A4	ARM, PTO SHIFT	2	
8	24550-018120	DRYBUSH18*12	2	
9	TT71090000A3	FORK(PTO3)	1	
10	TT71100000A4	PLUG22	1	
11	FT71110000A3	AXIS, FORK(PTO1-2)	1	
12	FT71120000A3	AXIS, FORK(PTO3-4)	1	
13	TT71130000A4	PIN, PTO	2	
15	TT71150000A4	PLUG22	1	
17A	FB71170000C3	PTO SHIFT LEVER	1	
17B	FB71170000B3	PTO Shift Lever	1	
18	FB71180000A3	PTO Shift Arm(1-2)	1	
19	FB71190000A3	PTO Shift Arm(3)	1	
20	26106-080552	HEX FLANGE BOLT (D80)	1	
22	FB71220000A4	PTO ARM(1-2)	1	
23	FB71230000B3	PTO Shift Cable	2	
24	TT70100000A4	SHIFTERARMHOLDER	2	
25	TT71250000A4	SPRING PIN	2	
26	TT71260000A4	SEAM	2	
28	TT65120000A4	COLLARB	2	
31	22351-060025	PIN, SPRING (6-25)	2	
32	22351-060032	PIN, SPRING (6-32)	2	
34	23414-220029	PACKING	2	
35	24190-080001	BALL,STEEL	2	
36	24190-100001	Ball, Steel (5/16)	2	
37	24311-000150	O-RING, DYNAMIC (Φ15)	2	
38	24311-000210	O-RING, DYNAMIC (Φ21)	2	
39	24421-173007	Seal, Oil (#17-30-07)	2	
41	26013-080202	Bolt, Hexa (8-20)	2	
43	FB71430000A4	PTO ARM(3)	1	
46	FB71460000A3	PTO,SUB SHIFT CABLE BRACKET ASSY	1	
47	22137-080000	WASHER, PLAIN (Φ 08)	2	
48	26106-080122	Bolt, Hexa (8-12)	2	
49	26106-080162	SCREW,HEXFLANGEHEADCAP	3	
52	26106-080222	SCREW, HEX FLANGE HEAD CAP	1	
53	26346-080002	U-NUT(D80)	1	
54	26013-080162	Bolt, Hexa (8-16)	4	
62	FB67620000A4	PTO Lever Link	1	

FIG S071 BRANSON 6530C	PTO SHIFT	Year/Month 2020/02

KeyNo.	Part Number	Part Name	Quantity	Other
63	26106-100252	SCREW,HEXFLANGEHEADCAP	2	
64	26106-100202	HEX BOLT, (10-20)	4	
80	FB71800000A2	Ass'y PTO Lever Bracket	1	
81	FB71810000A2	Ass'y Fixing Plate	1	
82	FB71820000B3	Cable Bracket	1	
83	FB71830000A4	Joint Bracket	1	
85	TTB1190000A4	PLATE	4	
86	RR47070000A4	Pin, Come-Off Snap (Φ6)	2	
87	22487-060160	PIN, HEAD (06-16)	2	
88	THB5408000A4	YORK	2	
89	TW43030000A4	SUTTLE CLEVIS A	2	
90	22487-100200	PIN, HEAD (10-20)	2	
91	RR51230000A4	SNAP PIN	2	

FIG S072 BRANSON 6530C	FRONT DRIVE	Year/Month 2020/02

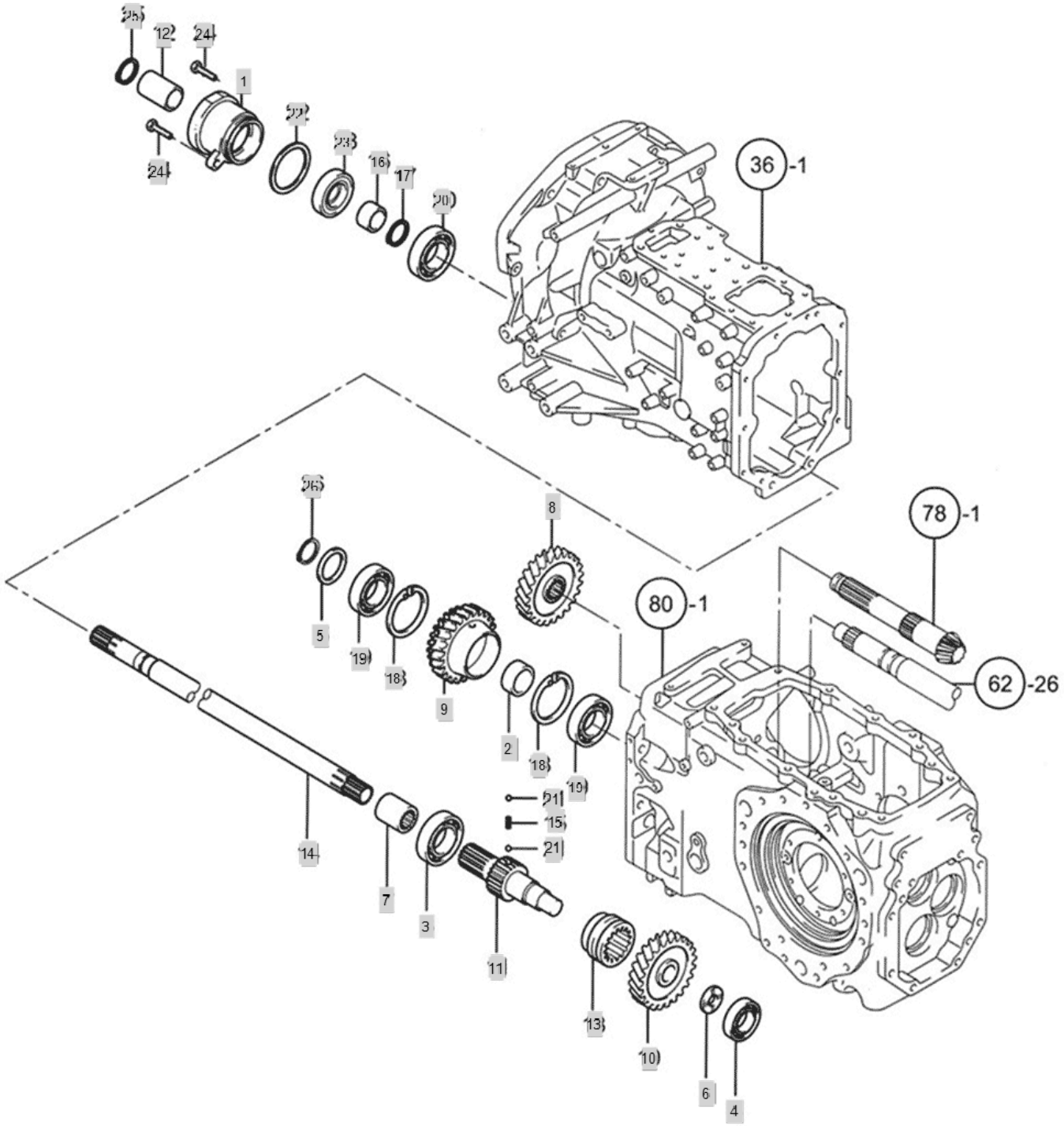

FIG S072 BRANSON 6530C	FRONT DRIVE	Year/Month 2020/02

KeyNo.	Part Number	Part Name	Quantity	Other
1	FB72010000A3	SEAL CASE	1	
2	TT54060000A4	COLLAR	1	
3	TT72030000A4	Bearing, Ball (#6205)	1	
4	24101-063024	Bearing, Ball (#6302)	1	
5	TT52120000B4	SPACER	1	
6	TT72060000A4	THRUST WASHER	1	
7	TT72070000A4	COUPLING	1	
8	TT72080000A4	GEAR, FRONT DRIVE	1	
9	TT72090000A3	GEAR, FORNT IDEL	1	
10	TT72100000A3	PINION,FRONT DRIVE	1	
11	TT72110000A3	SHAFT, FRONT DRIVE	1	
12	TT72120000A4	COLLAR	1	
13	TT72130000B4	SLIDER	1	
14	TT72140000A3	SHAFT	1	
15	TT71250000A4	SPRING PIN	1	
16	TT72160000A4	SLEEVE	1	
17	22242-000250	SNAP RING, SHAFT (Φ 25)	1	
18	22252-000621	RING, CIRCLIP (Φ 62)	2	
19	24101-060074	Bearing, Ball (#6007)	2	
20	24101-063054	BALL BEARING #6305	1	
21	24190-080001	BALL,STEEL	2	
22	24321-000600	SEAL,ORING	1	
23	24421-305208	OIL SEAL (TC305208)	1	
24	26013-080202	Bolt, Hexa (8-20)	2	
25	22242-000240	SNAP RING, SHAFT (Φ 24)	1	
26	22242-000340	SNAP RING, SHAFT (Φ 34)	1	

FIG S075 BRANSON 6530C	SHIFTER, FRONT DRIVE	Year/Month 2020/02

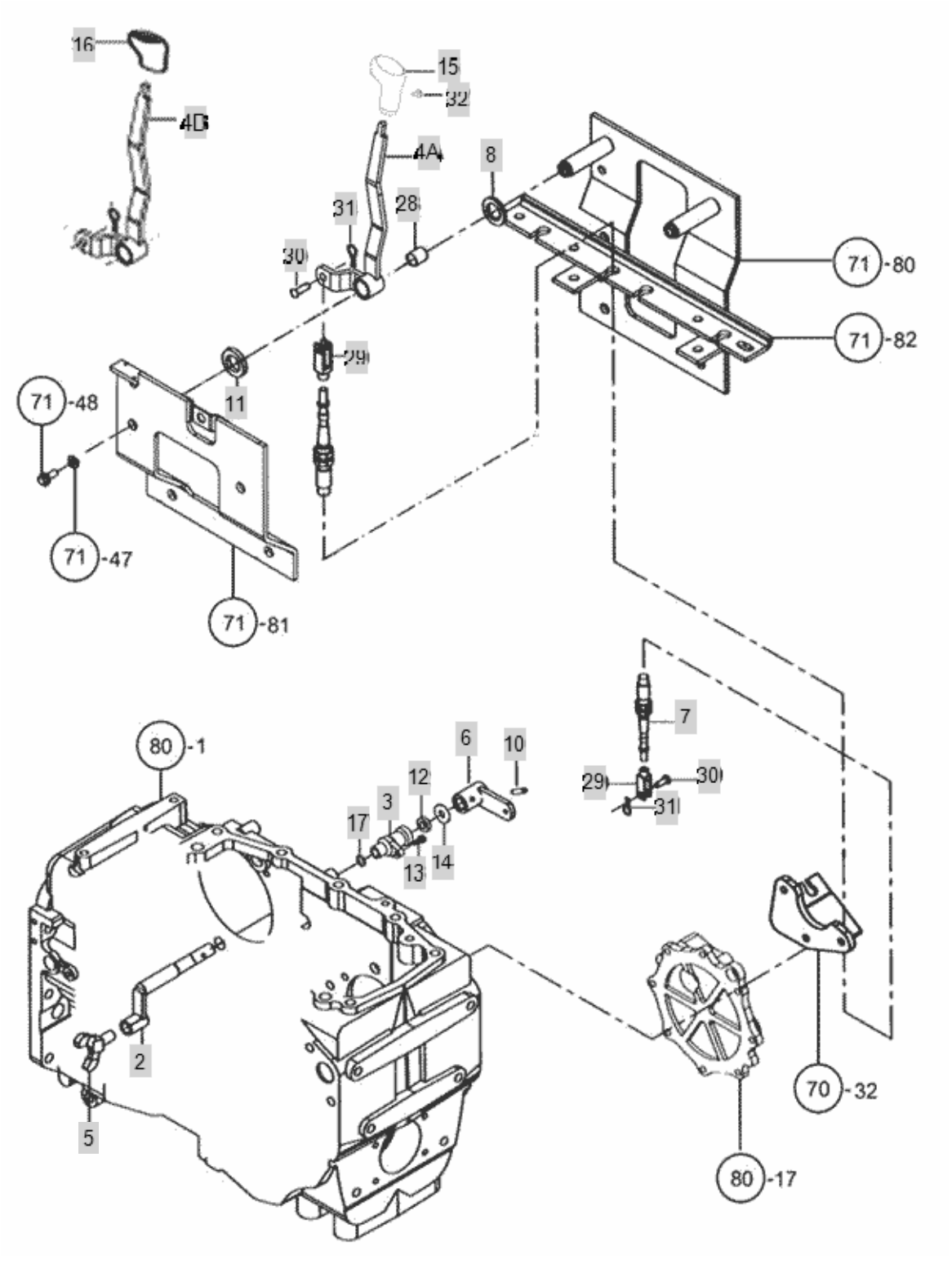

FIG S075 BRANSON 6530C	SHIFTER, FRONT DRIVE	Year/Month 2020/02

KeyNo.	Part Number	Part Name	Quantity	Other
2	FB75020000C4	FRONT DRIVE SHIFTER ARM	1	
3	TT65010000A4	HOLDER, SHIFT ARM	1	
4A	FB75040000C3	FRONT DRIVE LEVER	1	
4B	FB75040000A3	Front Drive Lever	1	
5	TT75050000A4	FORK, FRONT DRIVE SHIFT	1	
6	FB75060000B4	FRONT DRIVE ARM	1	
7	FB70070000A3	Front Wheel Drive Cable	1	
8	FBB1760000A4	Collar	1	
10	22351-060025	PIN, SPRING (6-25)	1	
11	TTB1190000A4	PLATE	1	
12	24421-173007	Seal, Oil (#17-30-07)	1	
13	26013-080252	Bolt, Hexa (8-25)	1	
14	TT65120000A4	COLLARB	1	
15	TA00015827A	KNOB, FRONT DRIVE LEVER	1	
16	FB75160000A4	Ass'y Front Drive Knob	1	
17	24311-000210	O-RING, DYNAMIC (Φ21)	1	
28	24550-018250	DRYBUSH	1	
29	TW43030000A4	SUTTLE CLEVIS A	2	
30	22487-100200	PIN, HEAD (10-20)	2	
31	RR51230000A4	SNAP PIN	2	
32	26023-040102	SCREW W/WASHER	1	

FIG S078 BRANSON 6530C	RING GEAR & DIFF.GEAR&FINAL PINION	Year/Month 2020/02

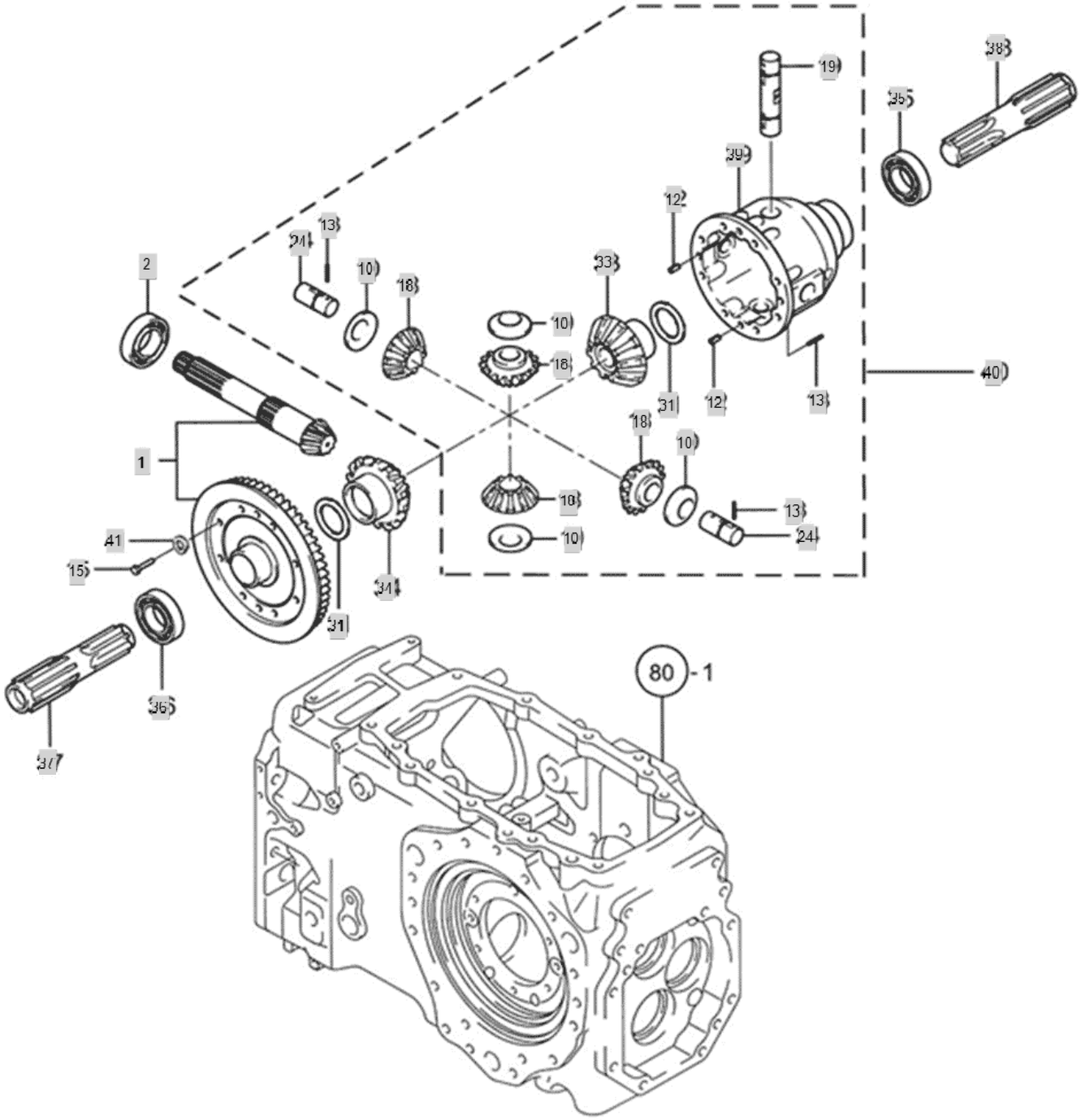

FIG S078 BRANSON 6530C	RING GEAR & DIFF.GEAR&FINAL PINION	Year/Month 2020/02

KeyNo.	Part Number	Part Name	Quantity	Other
1	FT78010000C9	RING GEAR ASSY	1	
2	TT78020000A3	BEARINGNJ307R	1	
10	TT78100000A4	LINER, DIFFERENTIL PINION	4	
12	22312-100250	PIN, DOWEL (10-25)	2	
13	22351-060040	PIN, SPRING (6-40)	3	
15	FT78150000B4	HEX BOLT	8	
18	FT78180000A3	DIFFERENTIAL PINION	4	
19	FT78190000A3	SHAFT, DIFFERENTIAL	1	
24	FT78240000A3	SHAFT, DIFFERENTIAL	2	
31	FT78310000A4	LINER, SIDE GEAR	2	
33	FT78330000B3	DIFF. SIDE GEAR R	1	
34	FT78340000B3	DIFF. SIDE GEAR L	1	
35	24101-060104	Bearing, Ball (#6010)	1	
36	24101-062114	Bearing, Ball (#6211)	1	
37	FT78370000B3	final pinion(L)	1	
38	FT78380000B3	final pinion(R)	1	
39	FT78390000C1	DIFFERENTIAL CASE	1	
40	FT78390099A9	DIFFERENTIAL ASSY	1	
41	FB78400000A4	WASHER	8	

FIG S079 BRANSON 6530C	DIFFERENTIAL CARRER	Year/Month 2020/02

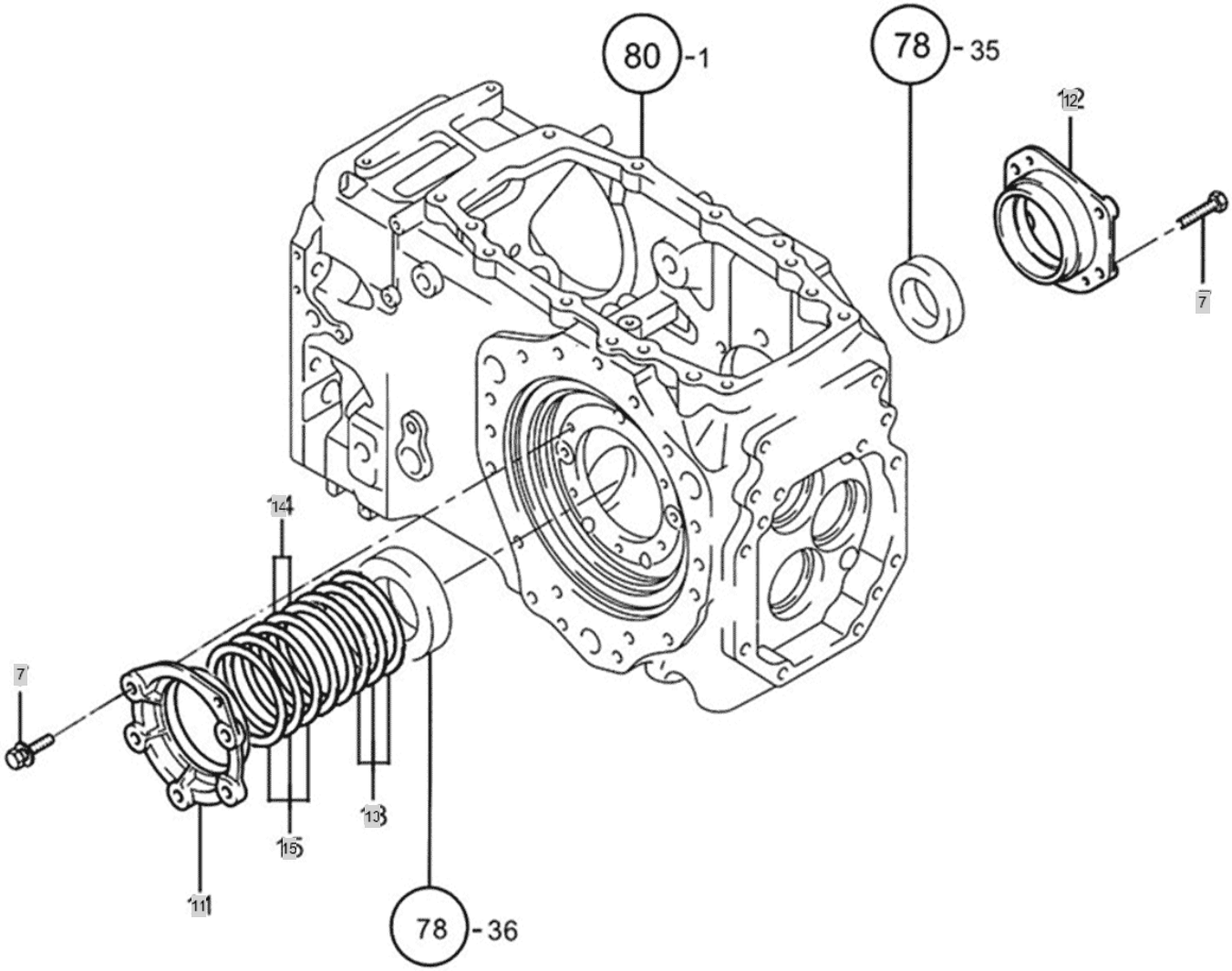

FIG S079 BRANSON 6530C	DIFFERENTIAL CARRER	Year/Month 2020/02

KeyNo.	Part Number	Part Name	Quantity	Other
7	26013-100302	SCREW,CAPTIVEWASHERCAP	10	
11	FT79110000B3	DIFFERENTIAL CARRIER (LH)	1	
12	FT79120000B3	DIFFERENTIAL CARRIER (RH)	1	
13	FT79130000B4	differential carrier shim	3	
14	FT79140000B4	differential carrier shim	2	
15	FT79150000B4	differential carrier shim	3	

FIG S080 BRANSON 6530C	CASE, REAR AXLE	Year/Month 2020/02

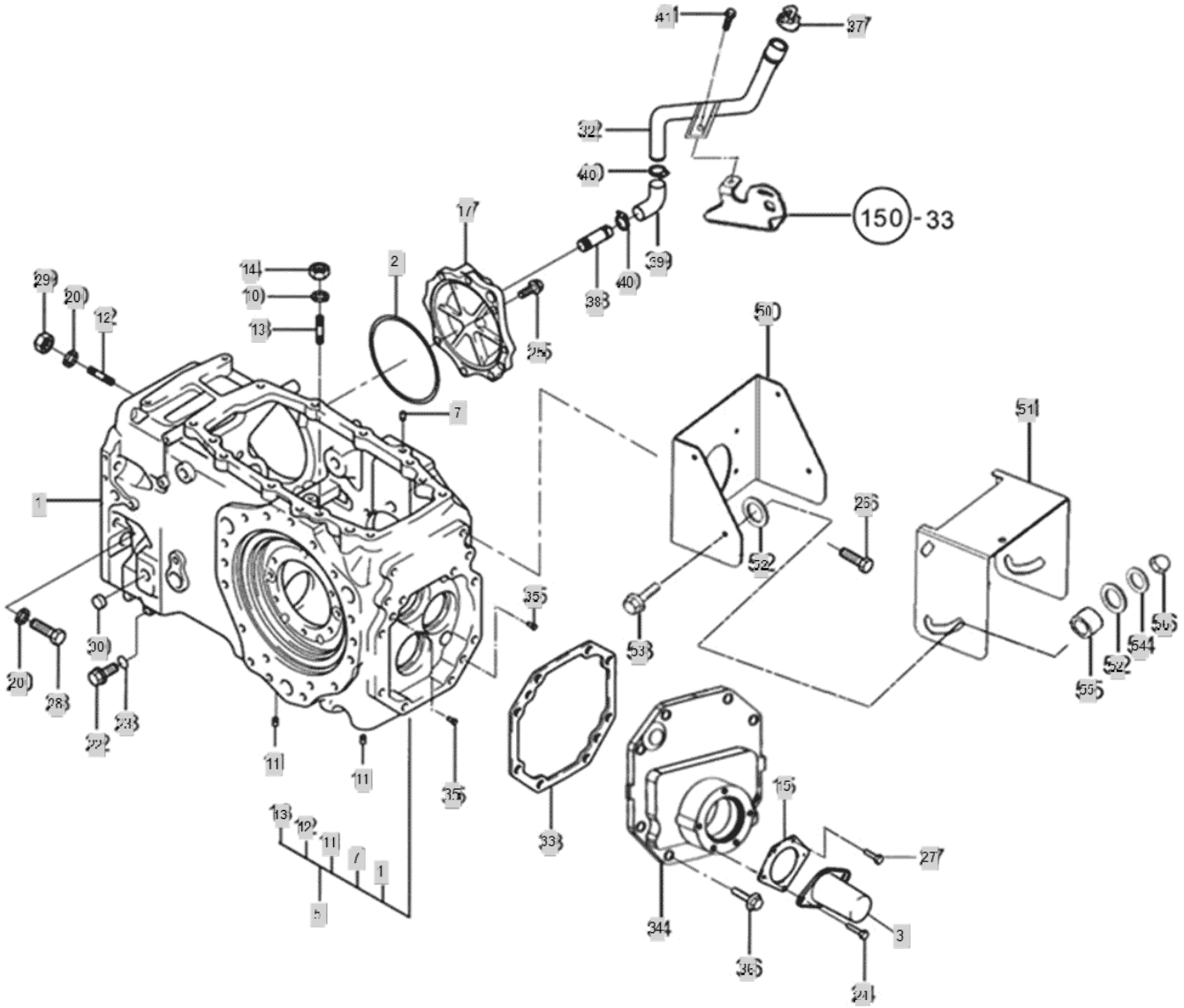

FIG S080 BRANSON 6530C	CASE, REAR AXLE	Year/Month 2020/02

KeyNo.	Part Number	Part Name	Quantity	Other
1	FB81050011C0	REAR AXLE CASE	1	
2	TT80020000A4	O-RING	1	
3	TT80030000A3	P.T.OCOVER	1	
5	FB80050000A9	REAR AXLE CASE COMPOUND ASSY	1	
7	23871-010000	PLUG	2	
10	22217-120000	WASHER, SPRING (Φ 12)	5	
11	23871-010000	PLUG	2	
12	FB80120000A4	STUD BOLT(M14X38)	5	
13	26216-120382	BOLT	5	
14	FT36100000A4	HEXAGON NUT	5	
15	TB29080000A3		1	
17	FT80170000A2	COVER, REAR AXLE CASE	1	
20	22217-140000	WASHER, SPRING (Φ 14)	10	
22	TB28120000C4	DRAIN PLUG	1	
23	24311-000160	O-RING, DYNAMIC (Φ16)	1	
24	26106-060122	HEX BOLT (6-12)	2	
25	26013-080252	Bolt, Hexa (8-25)	8	
26	26106-080122	Bolt, Hexa (8-12)	4	
27	26013-060122	Bolt, Hexa (6-12)	3	
28	FT08110000A4	BOLT(M14X42)	5	
29	FB36100000A4	HEXAGON NUT	5	
30	27260-200000	Cap, Seal (d=20mm)	1	
32	FT80320000D2	OIL PIPE	1	
33	FB80330000A2	PACKING	1	
34	FT 813400000	HOUSING, PTO SHAFT	1	
35	22312-120200	PIN, DOWEL (12-20)	2	
36	26013-120352	SCREW,CAPTIVEWASHERCAP	8	
37	FT80370000A4	CAP,INTAKE	1	
38	FT80380000A4	PIPE	1	
39	FT80390000B4	HOSEC,LOWERPRESS.	1	
40	23000-041000	HOSECLAMP	2	
41	26106-080162	SCREW,HEXFLANGEHEADCAP	1	
50	FB80500000A2	BRACKET, SAFTY COVER PTO	1	
51	FB80510000A2	COVER, PTO SHAFT	1	
52	FB80520000A4	RUBBER	8	
53	26106-080252	SCREW,HEXFLANGEHEADCAP	4	
54	22157-080000	WASHER, PLAIN (Φ 08)	4	
55	FB80550000A4	BUSH	4	
56	26347-080002	Unut	4	

FIG S082 BRANSON 6530C	READ AXLE HOUSING	Year/Month 2020/02

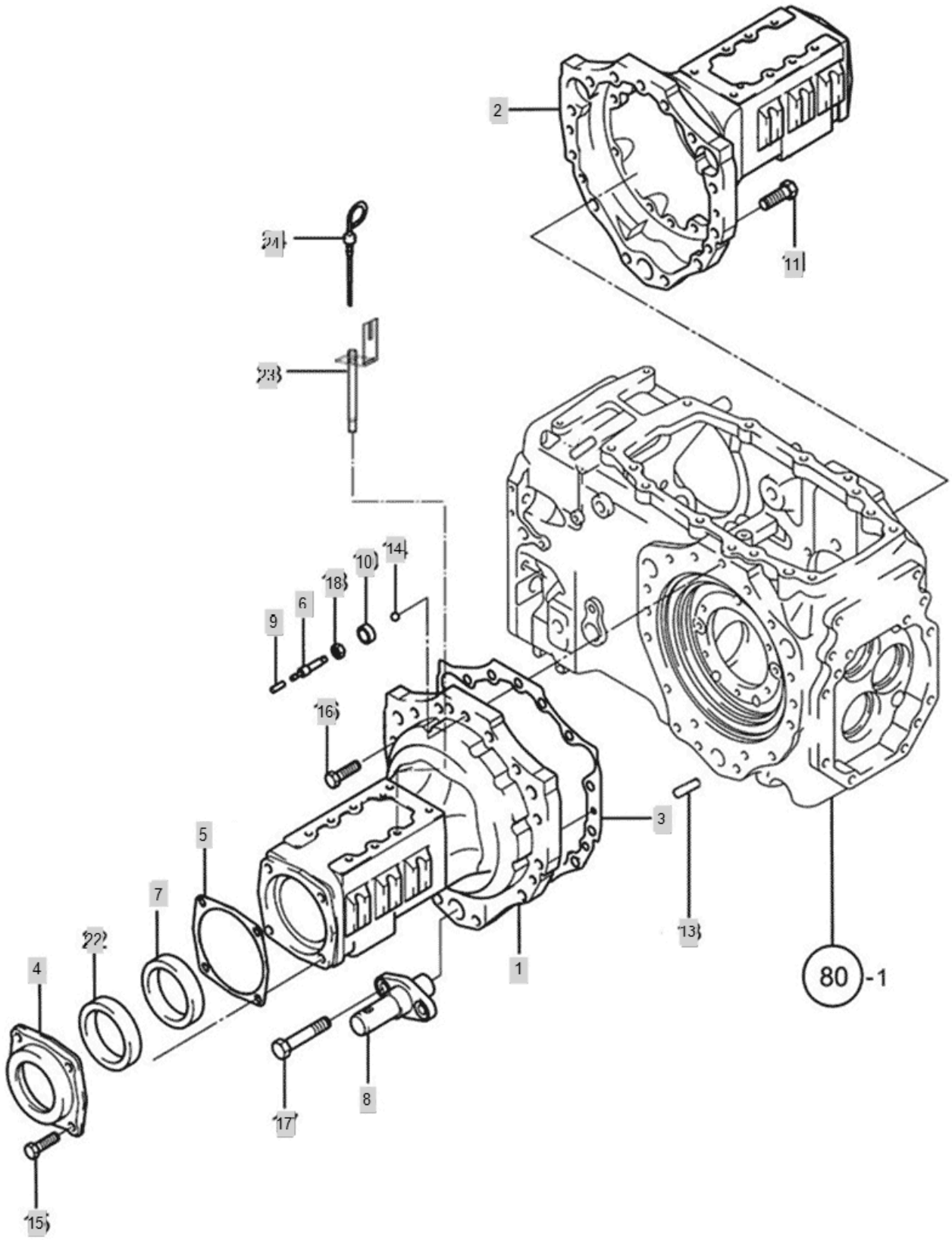

FIG S082 BRANSON 6530C	READ AXLE HOUSING	Year/Month 2020/02

KeyNo.	Part Number	Part Name	Quantity	Other
1	FT 82010000	REAR AXLE HOUSING (L)	1	
2	FT82020000D0	REAR AXLE HOUSING (RH)	1	
3	FB82030000A3	PACKING	2	
4	FT82040000B3	CASE, OIL SEAL	2	
5	FB82050000A4	PACKING	2	
6	TT82060000A4	AIR BRIDER	2	
7	TT82070000A3	OILSEAL	2	
8	FT82080000A3	LINK PIN	2	
9	TT82090000A4	CAP	2	
10	22190-100001	WASHER, PLAIN (Φ 10)	2	
11	FT80280000A4	BOLT	1	
13	22312-100180	PIN, DOWEL (10-18)	4	
14	24190-100001	Ball, Steel (5/16)	2	
15	26013-120352	SCREW,CAPTIVEWASHERCAP	8	
16	FT82160000A4	SCREW,CAPTIVEWASHERCAP	19	
17	FT82170000A4	SCREW,CAPTIVEWASHERCAP	4	
18	26756-100002	FIXEDNUT	2	
22	TB29290000A4	OILSEALVC75X100X7	2	
23	FT82230000B3	GUIDE,DIPSTICK	1	
24	FT82240000A3	DIPSTICK	1	

FIG S083 BRANSON 6530C	DIFFERENTIAL	Year/Month 2020/02

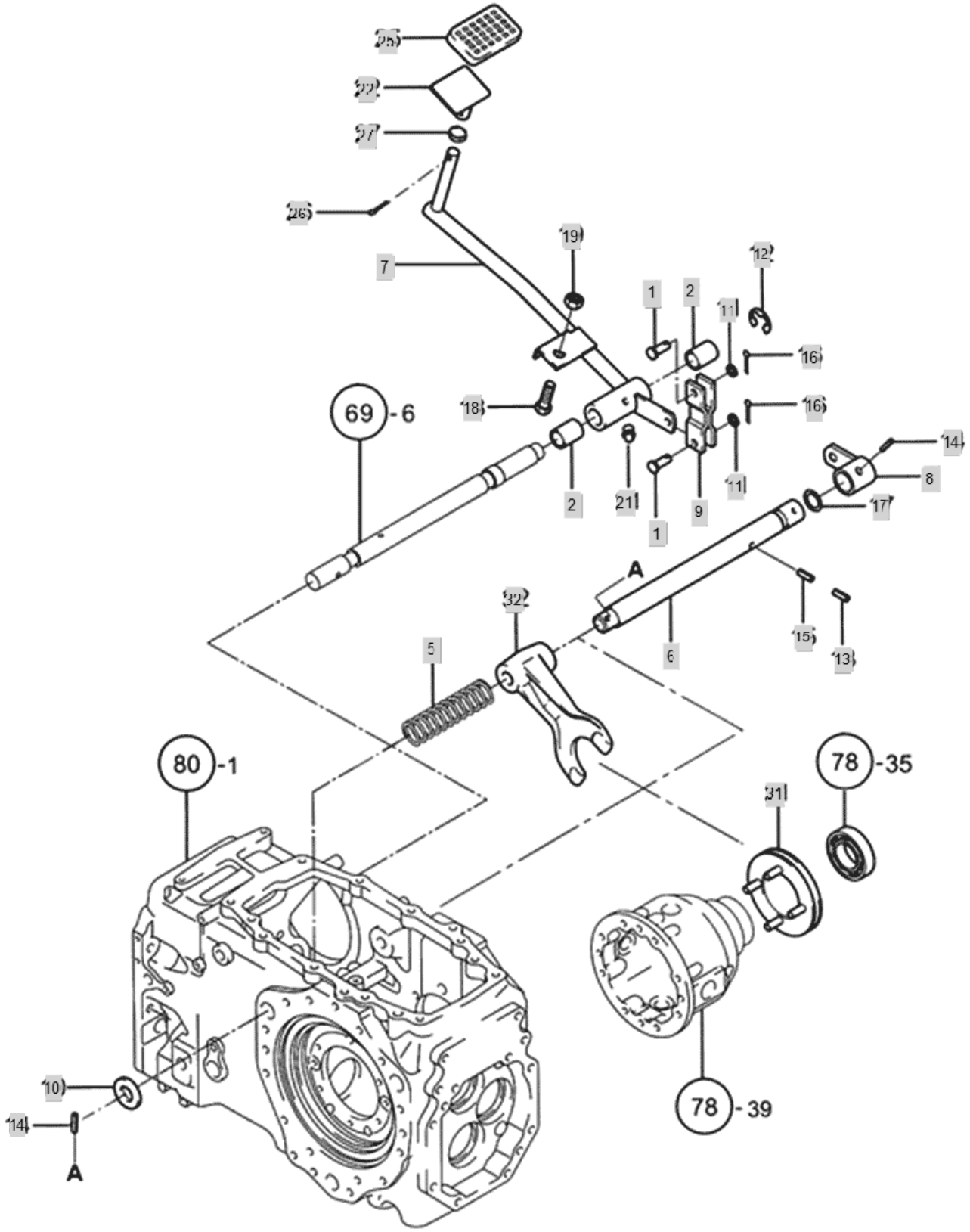

FIG S083 BRANSON 6530C	DIFFERENTIAL	Year/Month 2020/02

KeyNo.	Part Number	Part Name	Quantity	Other
1	TT83010000A4	TURN BUCKLE, 10X70	2	
2	TT83020000A4	BUSH	2	
5	TT83050000A4	RETURN SPRING	1	
6	TT83060000A3	FORK SHAFT, DIFF.LOCK	1	
7	FT83070000D2	PEDAL, DIFF.LOCK	1	
8	TT83080000A4	ARM, LINK	1	
9	TT83090000A4	ROD, LINK	1	
10	TT83100000B4		1	
11	22137-100000	WASHER, PLAIN (Φ 10)	2	
12	22272-000150	RING, CIRCLIP (Φ 15)	1	
13	22351-050040	PIN, SPRING (5-04)	1	
14	22351-080032	PIN, SPRING (8-32)	2	
15	22351-080040	PIN, SPRING (8-40)	1	
16	22417-250180	PIN , COTTER (2-18)	2	
17	24311-000160	O-RING, DYNAMIC (Φ16)	1	
18	26116-100402	BOLT	1	
19	26757-100002	FIXEDHEXAGONNUT	1	
21	TA27160000A4	GREASE NIPPLE	1	
22	FT83220000C4	PEDAL, DIFFERENTIAL	1	
25	TN01330000A4	RUBBERCOVER	1	
26	22360-160000	PIN , SNAP (6Φ)	1	
27	FB83270000A4	RUBBER	1	
31	FT83310000A3	LOCKING COLLAR, DIFF	1	
32	FT83320000B3	differential fork	1	

FIG S084 BRANSON 6530C	FINAL GEAR	Year/Month 2020/02

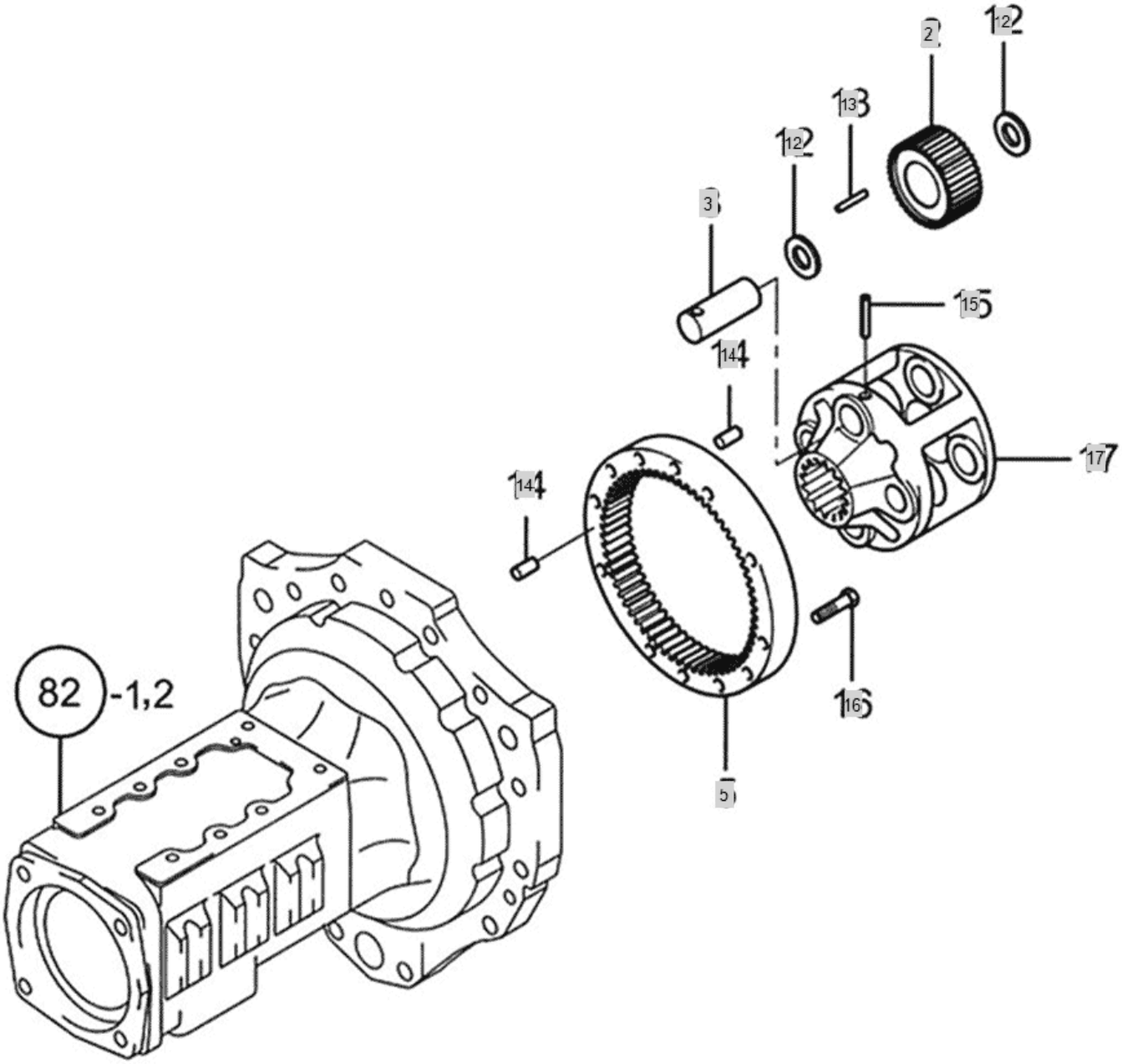

FIG S084 BRANSON 6530C	FINAL GEAR	Year/Month 2020/02

KeyNo.	Part Number	Part Name	Quantity	Other
2	FT84020000A3	PLANETARY PINION	8	
3	FT84030000A4	SHAFT, PLANETARY GEAR	8	
5	FT84050000B3	INTERNAL GEAR	2	
12	FT84120000A4	WASHER	16	
13	FT84130000A4	NEEDLE	168	
14	FT84140000A4	PIN,PARALELL	8	
15	22351-080040	PIN, SPRING (8-40)	6	
16	26116-100502	HEXAGONBOLT	16	
17	FT84170000B2	CARRIER, PLANETARY GEAR	2	

FIG S085 BRANSON 6530C	REAR AXLE SHAFT	Year/Month 2020/02

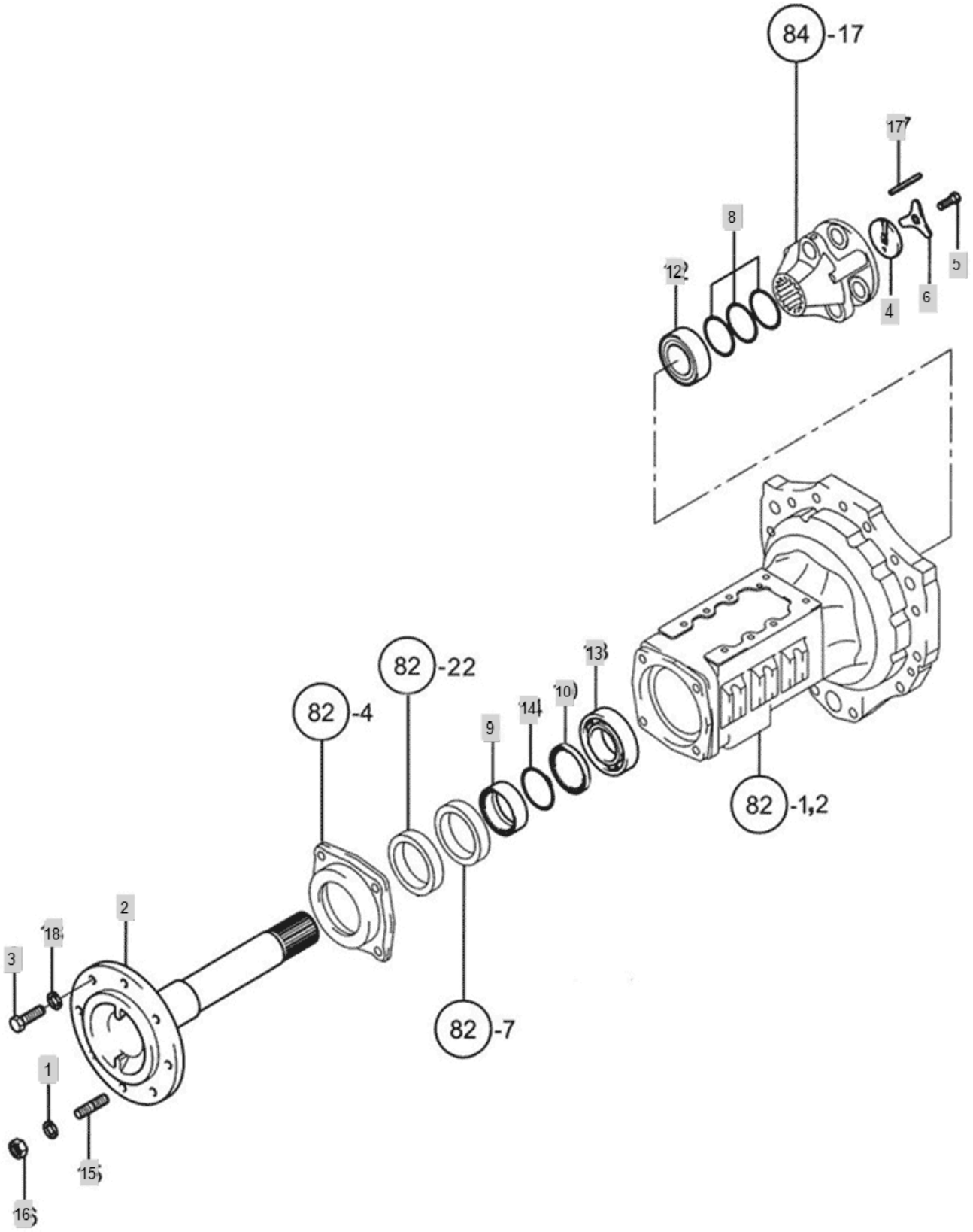

FIG S085 BRANSON 6530C	REAR AXLE SHAFT	Year/Month 2020/02

KeyNo.	Part Number	Part Name	Quantity	Other
1	22217-140000	WASHER, SPRING (Φ 14)	4	
2	FT85020000C2	SHAFT,REAR AXLE	2	
3	TB29440000A4	BOLTM14X35	12	
4	TT85040000A4	WASHER	2	
5	TT85050000A4	BOLT	2	
6	FT85070000A4	THRUST WASHER	2	
8	TT85080000A4	SHIM 0.5	6	
9	TT85090000B4	SEALCOLLAR	2	
10	FB85100000A4	O-RING SPACER	2	
12	24101-060114	BALL BEARING	2	
13	24101-063124	Bearing, Ball (#6312)	2	
14	24321-000600	SEAL,ORING	2	
15	TT85150000A4	Bolt	4	
16	TB29420000A4	NUT M14	4	
17	22351-050020	PIN, SPRING (5-20)	2	
18	FB85180000A4	WASHER	12	

FIG S094 BRANSON 6530C	BRAKE	Year/Month 2020/02

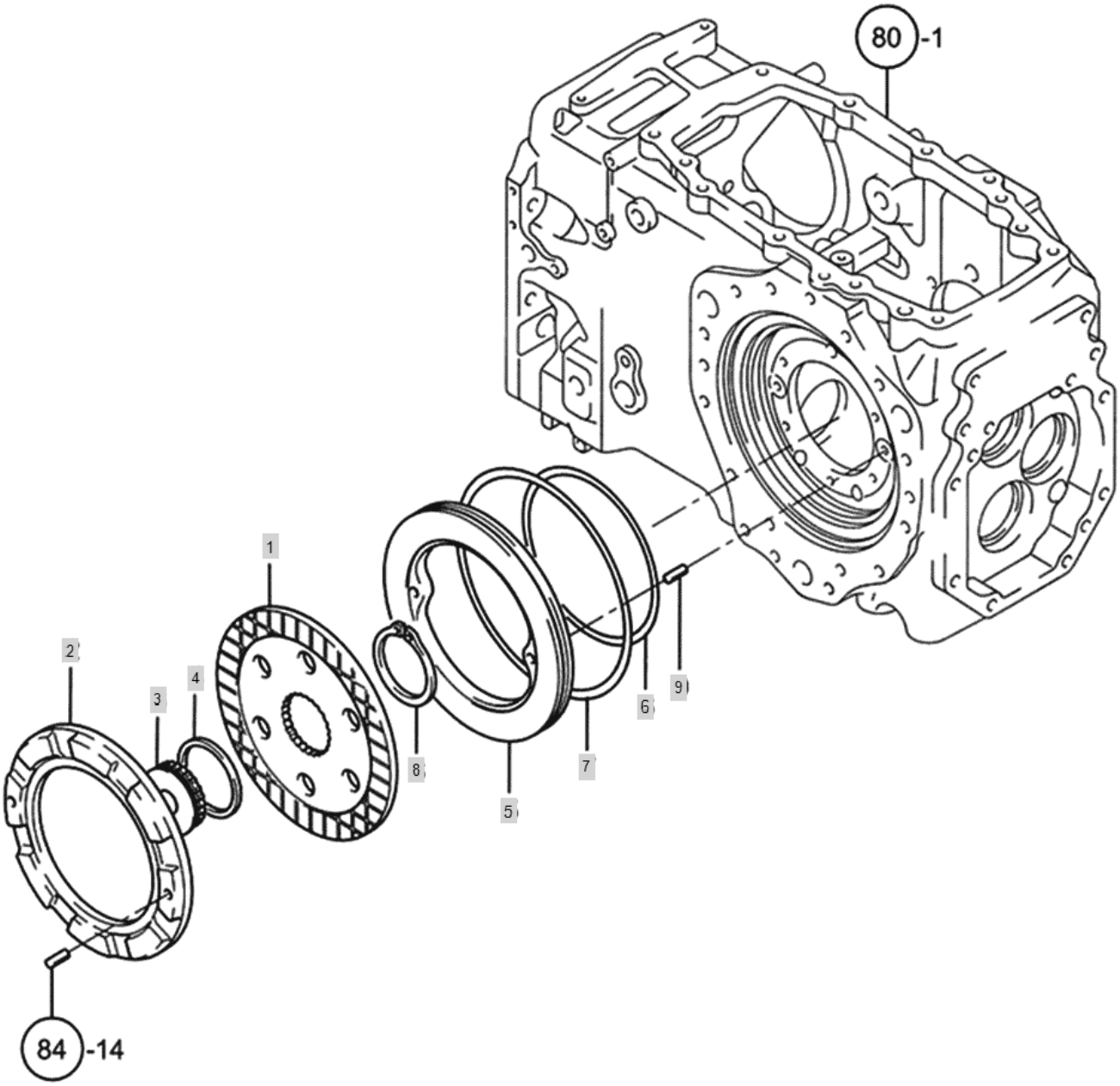

FIG S094 BRANSON 6530C	BRAKE	Year/Month 2020/02

KeyNo.	Part Number	Part Name	Quantity	Other
1	TT94010000A3	BRAKE DISK	2	
2	FT94020000A3	Brake Plate	2	
3	TT94030000B4	SPLINE COLLAR	2	
4	TT94040000A4	SPACER	2	
5	TT94050000A3	BRAKE PAN P	2	
6	TT94060000A4	D-RING176	2	
7	TT94070000A4	D-RING235	2	
8	22242-000700	SNAP RING, SHAFT (Φ70)	2	
9	22312-120200	PIN, DOWEL (12-20)	4	

FIG S095 BRANSON 6530C	PEDAL, BRAKE	Year/Month 2020/02

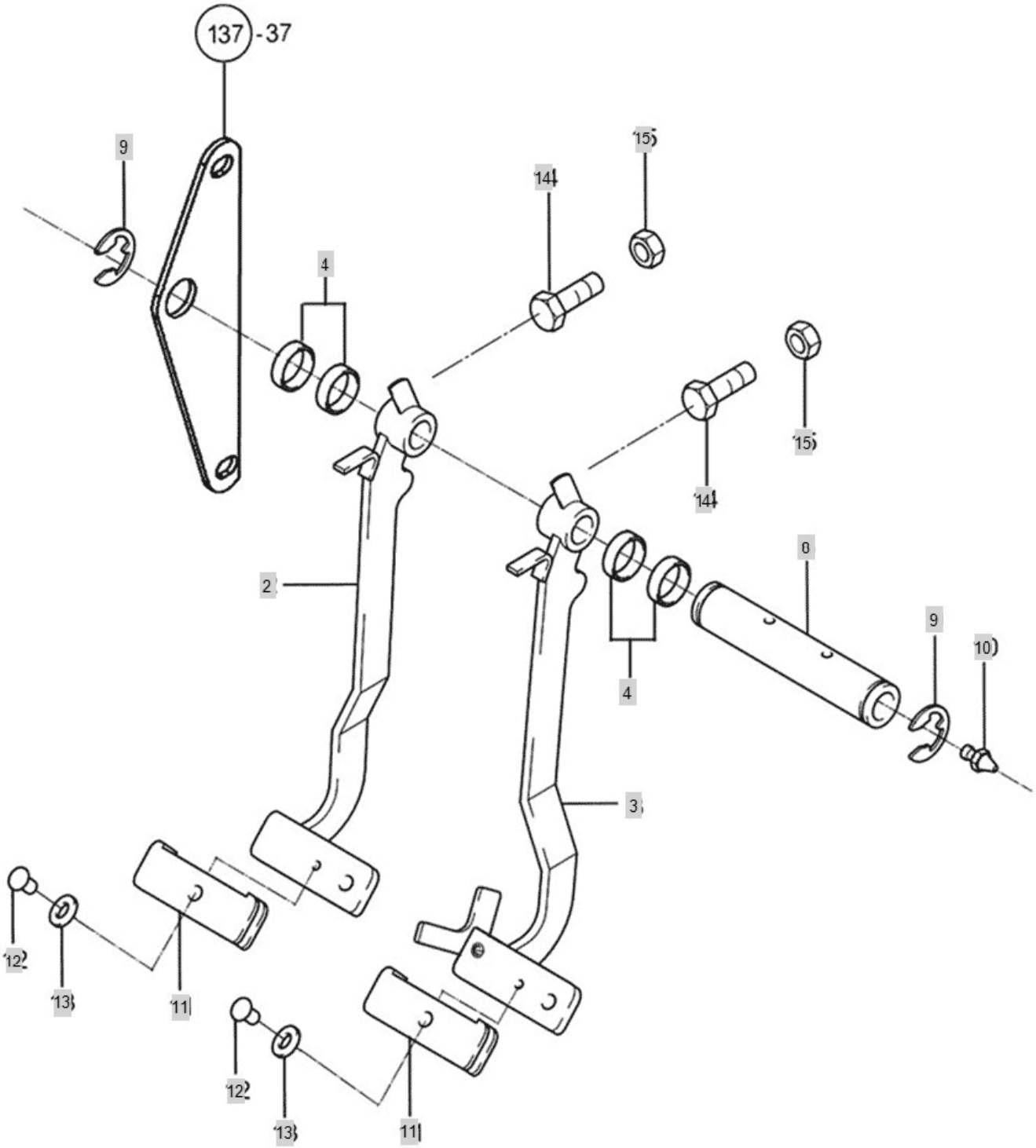

FIG S095 BRANSON 6530C	PEDAL, BRAKE	Year/Month 2020/02

KeyNo.	Part Number	Part Name	Quantity	Other
2	FT95020000B2	PEDAL(L), BRAKE	1	
3	FT95030000B2	PEDAL(R), BRAKE	1	
4	24550-018120	DRYBUSH18*12	4	
8	FT95080000A4	BAEAK PEDAL AXIS	1	
9	22272-000150	RING, CIRCLIP (Φ 15)	2	
10	TA27160000A4	GREASE NIPPLE	1	
11	TC73050000A3	PEDALHEADCOVER	2	
12	TC73040000A4	WASHER(REVET)	2	
13	TC73030000A4	RIVET(PEDALHEAD)	2	
14	TT95010000A4	BOLT	2	
15	26756-080002	NUT	2	

FIG S096 BRANSON 6530C	VALVE, BRAKE	Year/Month 2020/02

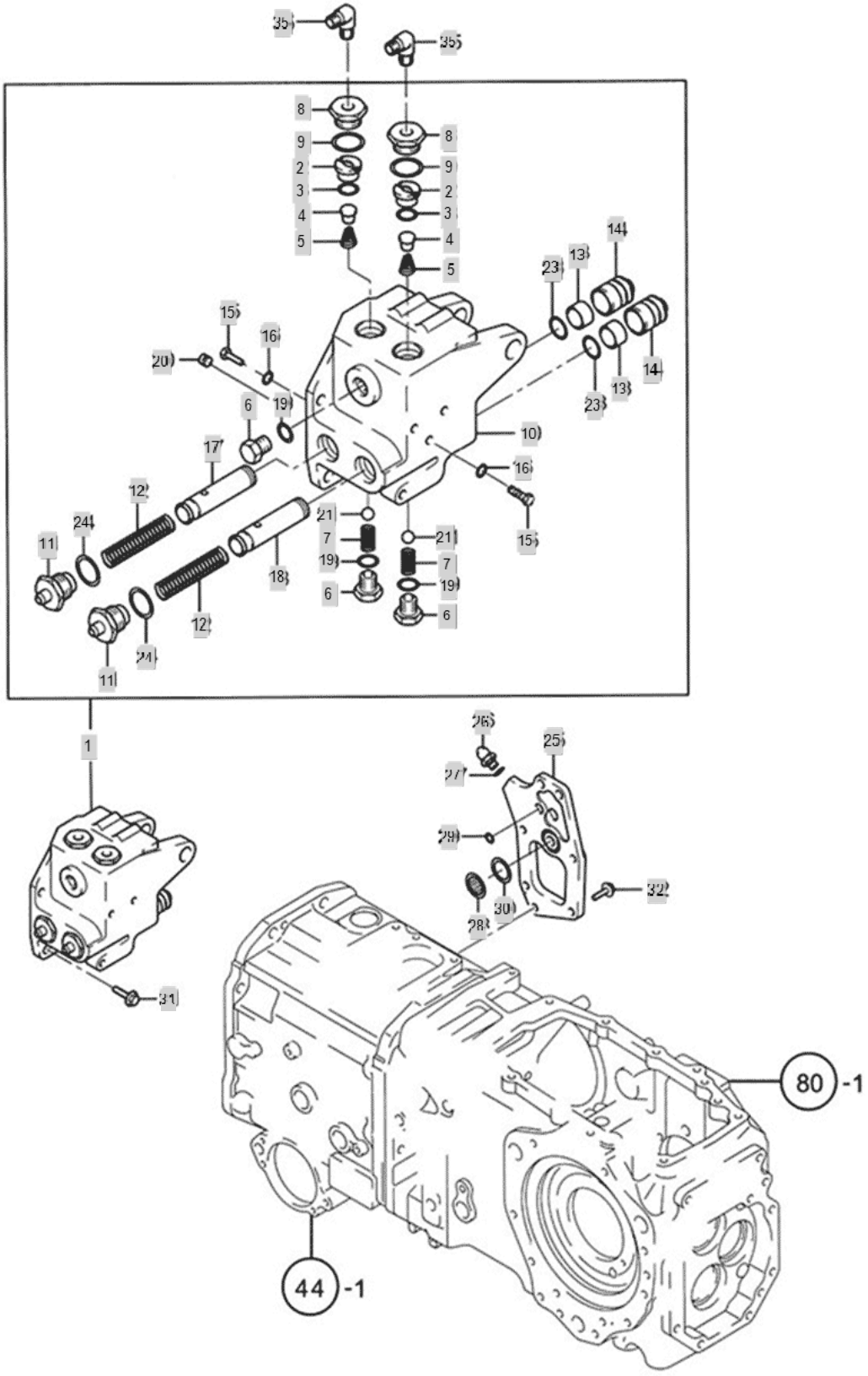

FIG S096 BRANSON 6530C	VALVE, BRAKE	Year/Month 2020/02

KeyNo.	Part Number	Part Name	Quantity	Other
1	FT96010000A3	BRAKE VALVE	1	
2	TT96020000A4	VALVE SHEET,CHECK	2	
3	TT96030000A4	O-RING	2	
4	TT96040000A4	VALVE,CHECK	2	
5	TT96050000A4	SPRING,CHECK VALVE	2	
6	TT96060000A4	PLUG	3	
7	TT96070000A4	SPRING	2	
8	FT96080000A4	PLUG	2	
9	TT96090000A4	O-RING	2	
10	FT96100000A1		1	
11	TT96110000A4	PLUG A	2	
12	TT96120000A4	SPRING,MAINPISTON	2	
13	TT96130000A4	OILSEAL	2	
14	TT96140000A4	BOOTS,BREAKVALVE	2	
15	TT96150000A4	STOPPER	2	
16	TT96160000A4	O-RING	2	
17	TT96170000A3	MAINPISTON A	1	
18	TT96180000A3	MAINPISTON B	1	
19	TT96190000A4	O-RING	3	
20	23871-010000	PLUG	1	
21	24190-160003	BALL STEEL	2	
23	24315-000220	O RING(P-TYPE)	2	
24	24315-000240	O-RING	2	
25	FT96250000A2	BRACKET, VALVE	1	
26	FT96260000A4	CONNECTOR	1	
27	TT96160000A4	O-RING	1	
28	TT96280000A9	STRAINER	1	
29	24315-000100	O-RING	1	
30	24315-000240	O-RING	1	
31	26106-100202	HEX BOLT, (10-20)	4	
32	26106-100252	SCREW,HEXFLANGEHEADCAP	3	
35	FT96350000A4	ADAPTER	2	

FIG S097 BRANSON 6530C	PIPE, BRAKE	Year/Month 2020/02

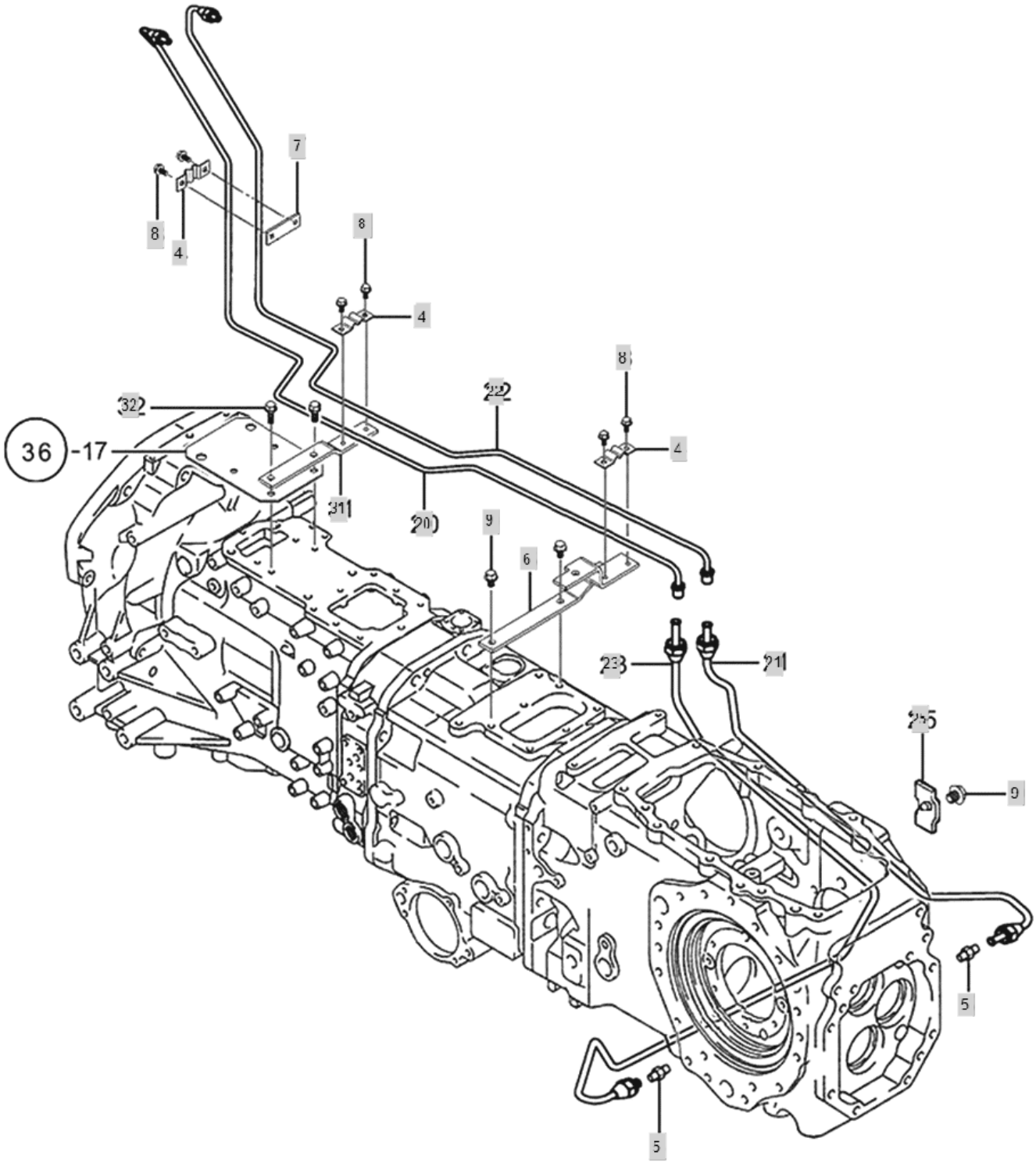

FIG S097 BRANSON 6530C	PIPE, BRAKE	Year/Month 2020/02

KeyNo.	Part Number	Part Name	Quantity	Other
4	FT97040000A4	BRACKET-UPPER(BRAKE TUBE)	3	
5	TT97050000A4	CUNNUCTOR	2	
6	FB97060000A3	BRAKE TUBE HOLDING BRACKET	1	
7	FT97050000A4	BRACKET-LOWER(BRAKE TUBE)	1	
8	26106-060122	HEX BOLT (6-12)	6	
9	26106-080162	SCREW,HEXFLANGEHEADCAP	3	
20	FB97200000A2	Ass'y Brake Tube-LF	1	
21	FB97210000A2	Ass'y Brake Tube-RR	1	
22	FB97220000A2	Ass'y Brake Tube-RF	1	
23	FB97230000A2	Ass'y Brake Tube-LR	1	
25	FB97250000A4	CLAMP	1	
31	FB97310000A3	BRACKET-FRONT(BRAKE TUBE)	1	
32	26013-080202	Bolt, Hexa (8-20)	2	

FIG S098 BRANSON 6530C	PARKING BRAKE	Year/Month 2020/02

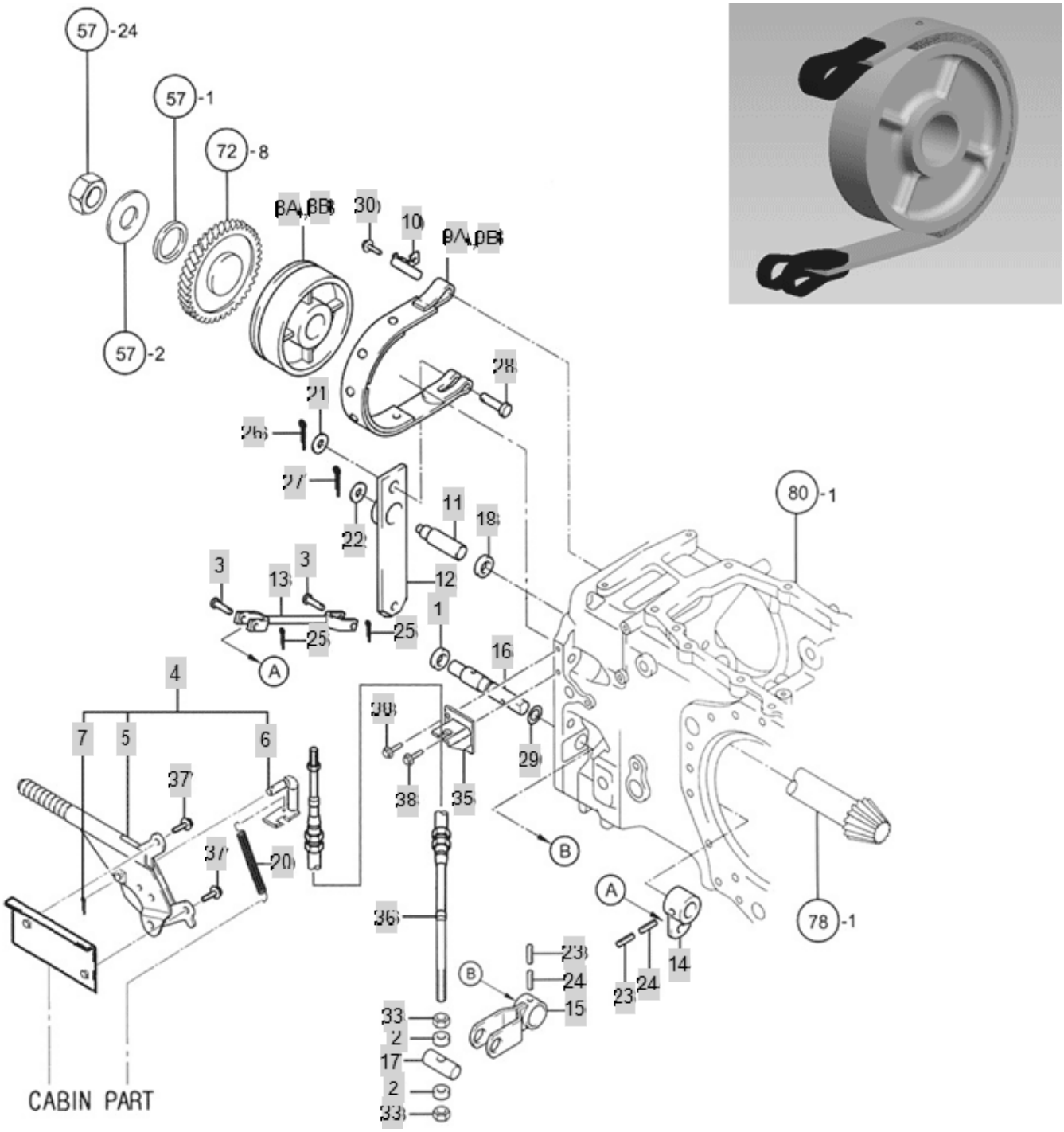

FIG S098 BRANSON 6530C	PARKING BRAKE	Year/Month 2020/02

KeyNo.	Part Number	Part Name	Quantity	Other
1	24311-000160	O-RING, DYNAMIC (Φ16)	1	
2	TT98020000A4	LEVER COLLAR, BRAKE	2	
3	TT98030000A4	HEAD PIN	2	
4	FB98040000A9	PARKING BRAKE ASS'Y	1	
5	TT98050000A3	BRAKELEVERASSY,PARKING	1	
6	FB98060000A4	LOAD ASS'Y	1	
7	22417-200300	PIN , COTTER (2-30)	1	
8A	TA00021095A	PARKING DRUM	1	
8B	TT98080000A3	DRUM,PACKING BRAKE	1	
9A	TA00021092A	BRAKE SHOE ASS'Y	1	
9B	TT98090000A3	BRAKE SHOE, PARK BRAKE	1	
10	TT98100000A4	HINGE, PARKING BRAKE	1	
11	TT98110000A4	SHAFT	1	
12	TT98120000B4	LINKARM	1	
13	TT98130000A4	ROD, PARKING BRAKE	1	
14	TT98140000A4	ARM A	1	
15	TT98150000C4	ARM B	1	
16	TT98160000B4	SHAFT, PARKING BRAKE ARM	1	
17	TT98170000A4	PIN	1	
18	TT98180000A4	COLLAR	1	
20	FB98200000A4	Spring	1	
21	22117-120000	WASHER, PLAIN (Φ 12)	1	
22	22137-120000	WASHER, PLAIN (Φ 12)	1	
23	22351-035028	PIN, SPRING (3-02)	2	
24	22351-060028	PIN, SPRING (6-28)	2	
25	22417-200150	PIN , COTTER (2-15)	2	
26	22417-250220	PIN , COTTER (2-22)	1	
27	22417-250220	PIN , COTTER (2-22)	1	
28	22487-120300	PIN, HEAD (12-30)	1	
29	24311-000125	O-RING, DYNAMIC (Φ12.5)	1	
30	26106-080162	SCREW,HEXFLANGEHEADCAP	1	
33	26716-100002	Nut, Hexa (Φ10)	2	
35	FB98350000C4	CABLE HOLDER(PARKING)	1	
36	FB98360000A3	Parking Brake Cable	1	
37	26106-080162	SCREW,HEXFLANGEHEADCAP	2	
38	26013-080162	Bolt, Hexa (8-16)	2	

FIG S099 BRANSON 6530C	HYDRAULIC PUMP	Year/Month 2020/02

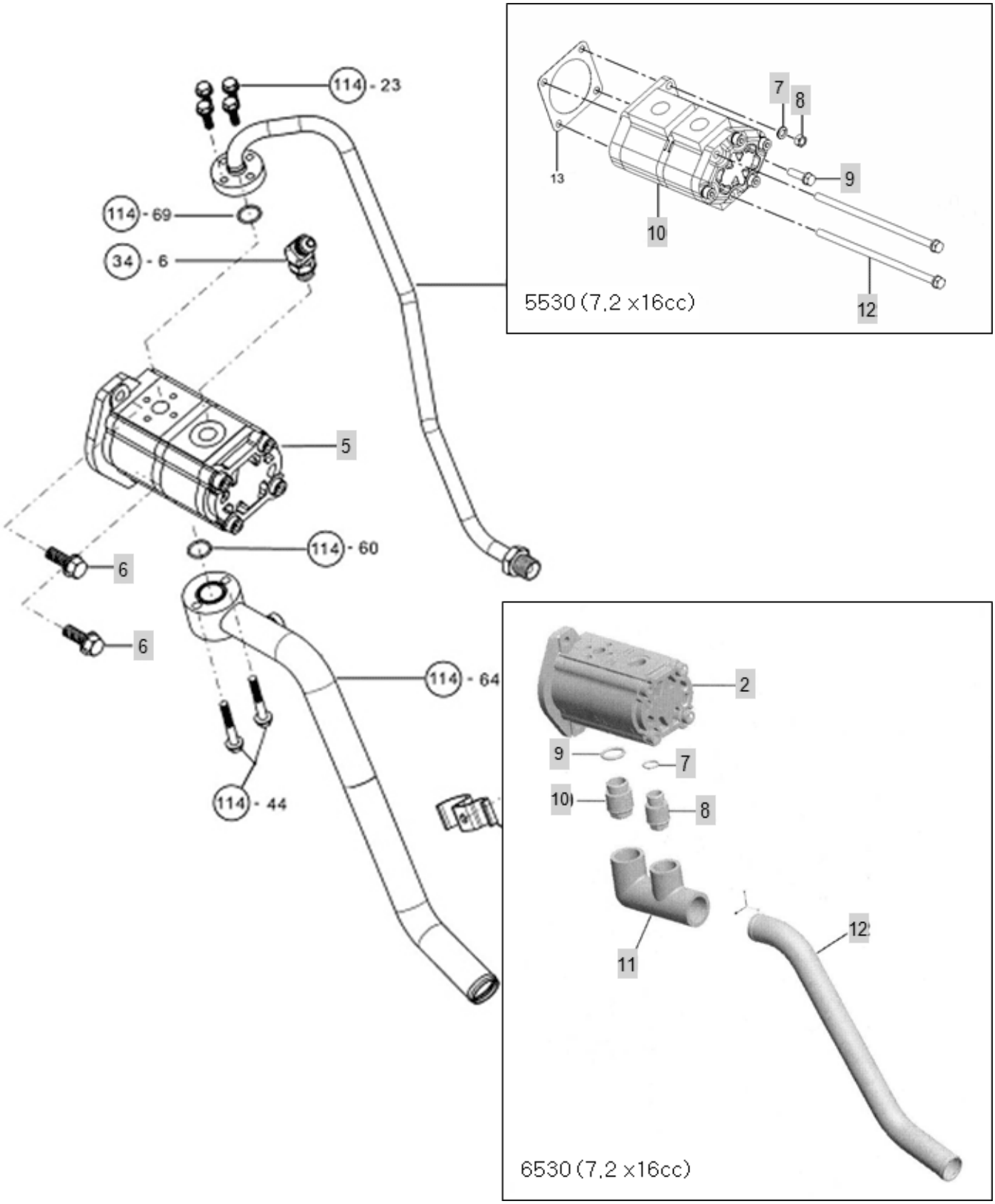

FIG S099 BRANSON 6530C	HYDRAULIC PUMP	Year/Month 2020/02

KeyNo.	Part Number	Part Name	Quantity	Other
5	FB99050000A3	Ass'y Hydraulic Pump	1	
6	26106-100252	SCREW,HEXFLANGEHEADCAP	2	
2	FB99110000B3	HYD PUMP ASSY (10cc X 16cc)	1	
7	24311-000180	O-RING, DYNAMIC (Φ18)	1	
8	TCC9040000A4	JOINT M22	1	
9	24311-000240	O-RING, DYNAMIC (Φ24)	1	
10	FBB4500000A4	JOINT 3/4	1	
11	FBB4510000A3	HOSE, LOWER PRESSURE	1	
12	FBB4520000A1	PIPE	1	

FIG S101 BRANSON 6530C	CASE, HYDRAULIC CYLINDER	Year/Month 2020/02

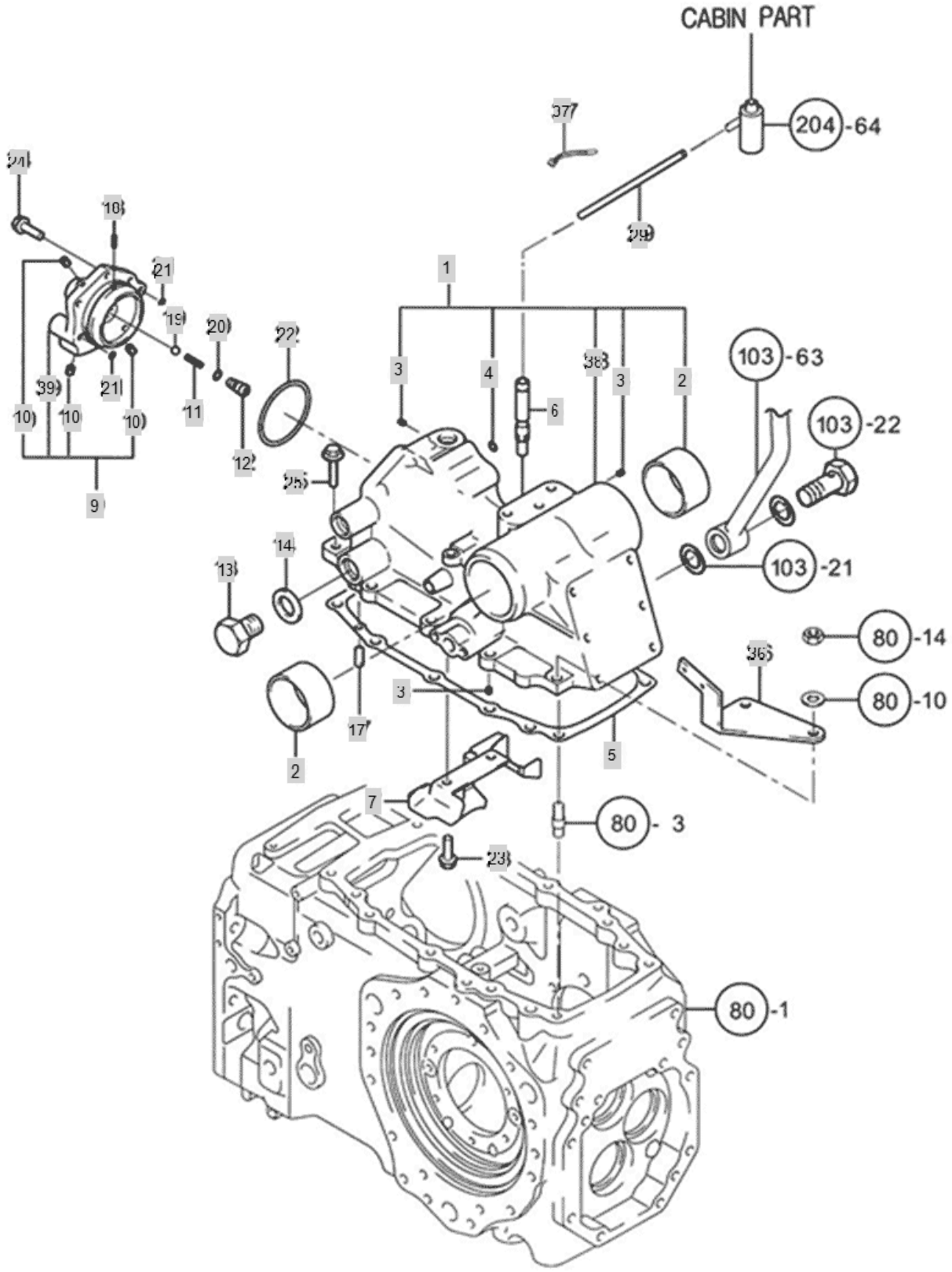

FIG S101 BRANSON 6530C	CASE, HYDRAULIC CYLINDER	Year/Month 2020/02

KeyNo.	Part Number	Part Name	Quantity	Other
1	FBA100000A9	30S CASE ASS'Y HYD-CYLINDER -> FBA1000000A9	1	
2	TTA1020000A4	BUSH	2	
3	23871-020000	Plug, Pipe	3	
4	24311-000110	O-RING, DYNAMIC (Φ11)	1	
5	FBA1050000A3	PACKING	1	
6	FTA1060000A4	AIR BREATHER	1	
7	TTA1070000A3	OILGUIDE	1	
9	FBA1090000B9	HEAD ASS'Y, CYLINDER	1	
10	23871-020000	Plug, Pipe	3	
11	TTA1110000A4	SPRING,CHECKVALVE	1	
12	FTA1120000A4	PLUG	1	
13	TTA1130000A4	PLUG	2	
14	TTA1140000A4	PACKING	2	
17	22312-100180	PIN, DOWEL (10-18)	2	
18	22351-040016	PIN, SPRING (4X16)	1	
19	24190-160003	BALL STEEL	1	
20	24315-000140	O-RING	1	
21	24315-000140	O-RING	2	
22	24325-000950	O-RING	1	
23	26013-080122	Bolt, Hexa (8-12)	2	
24	26013-120352	SCREW,CAPTIVEWASHERCAP	6	
25	26013-120352	SCREW,CAPTIVEWASHERCAP	5	
29	23980-730800	HOSE(AIR BREATHER)	1	
36	FTA1360000B3	SwitchBracket	1	
37	TTB9420000A4	Band, Wire (250mm)	1	
38	FTA1010011A0	HYD-CYLINDER CASE	1	
39	FBA1090011A1	CYLINDER HEAD	1	

FIG S103 BRANSON 6530C	VALVE, REMOTE (CURRENT VERSION)	Year/Month 2020/02

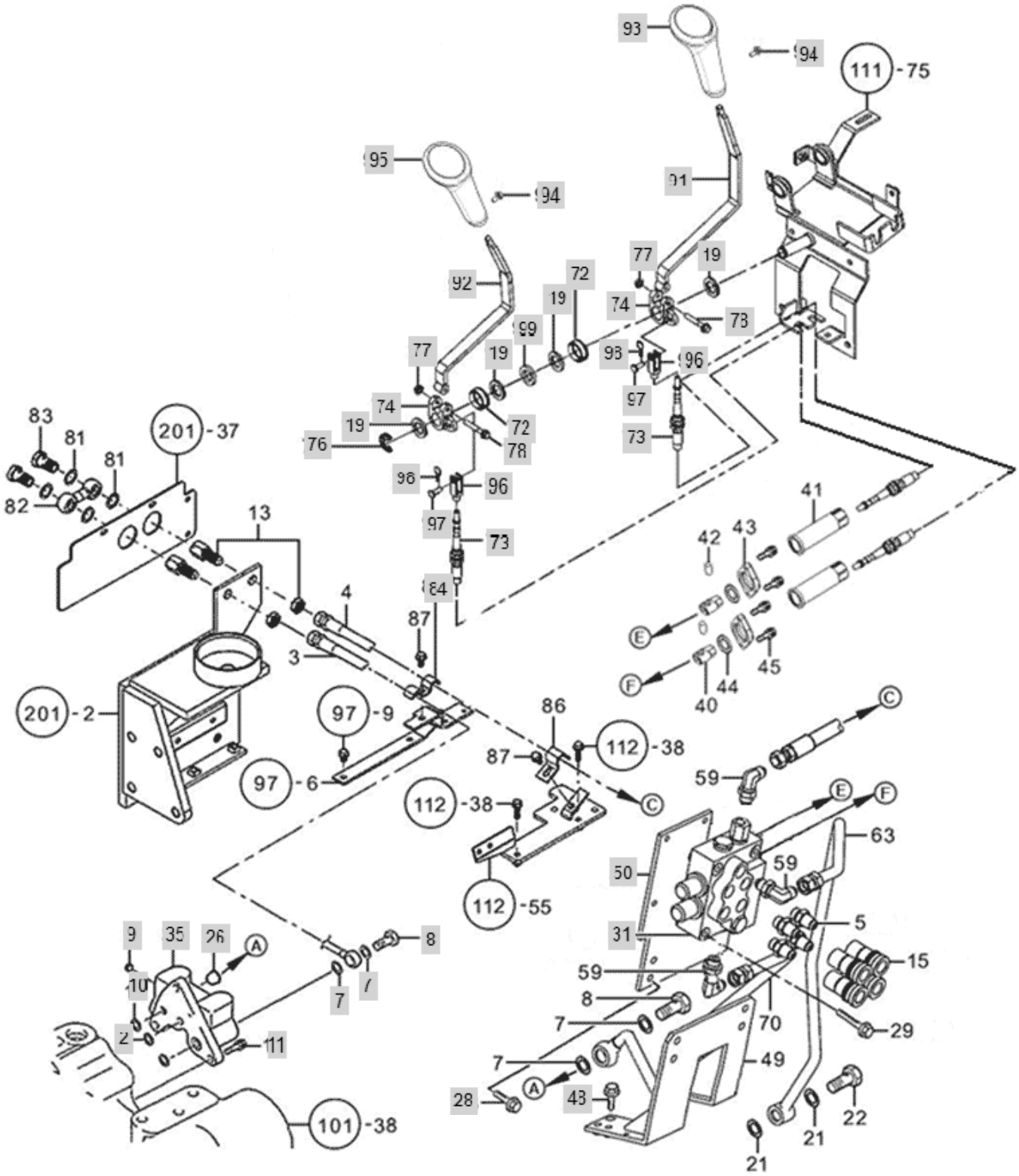

FIG S103 BRANSON 6530C	VALVE, REMOTE (CURRENT VERSION)	Year/Month 2020/02

KeyNo.	Part Number	Part Name	Quantity	Other
2	24315-000120	O-RING	1	
3	FBA3090000A3	HOSE B	1	
4	FBA3100000A3	HOSE A	1	
5	FBA3060000A4	ADAPTER (1/2")	4	
7	23414-200026	WASHER, PLAIN (Φ 20)	4	
8	TTB4180000A4	BOLT	2	
9	23871-020000	Plug, Pipe	1	
10	24315-000140	O-RING	2	
11	26013-080252	Bolt, Hexa (8-25)	3	
13	FBA3130000A4	CONNECTOR ASS'Y	2	
15	FBA3150000A3	QUICK COUPLER (1/2")	4	
19	TTB1190000A4	PLATE	4	
21	TTA1140000A4	PACKING	2	
22	FBA3930000A4	CONNECTOR	1	
26	TTA3260000A4	STRAINER	1	
28	26106-080202	SQR FLANGE BOLT	4	
29	26106-080602	SCREW,HEXFLANGEHEADCAP	3	
31	TA00001531A	SCV VALVE ASS'Y	1	
35	FTA3350000A2	BRACKET	1	
40	TA00001526A	JOINT	2	
41	TA00001527A	JOINT SHAFT	2	
42	TA00001528A	PIN	2	
43	TA00001530A	COVER A	2	
44	24341-000220	O-RING, FIX (Φ22)	2	
45	26450-050162	BOLT	4	
48	26106-100202	HEX BOLT, (10-20)	4	
49	FBA3490000A3	SCV BRACKET	1	
50	FBA3500000B2	VALVE BRACKET ASS'Y	1	
59	CEE4050000A4	ELBOW (3/8)	3	
63	FBA3630000A2	DRAIN PIPE	1	
70	FBA3700000A2	SCV PIPE	1	
72	24550-018150	DRY BUSH	2	
73	FBA3730000B3	SCV WIRE	2	
74	FBA3740000A4	ARM, SCV-LEVER	2	
76	22272-000150	RING, CIRCLIP (Φ 15)	1	
77	26366-060002	Nut, Hexa (Φ6)	2	
78	FBA3780000A4	HEXAGON BOLT	2	
81	23414-180000	WASHER,SEALING	4	
82	FBA3B20000A3	CONNCETING PIPE, FRONT	1	
83	TT34200000A4	CONNECTOR	2	
84	FBA3B30000A4	CLAMP-REAR	1	
86	TTB4120000A4	CLAMP	1	
87	26106-080162	SCREW,HEXFLANGEHEADCAP	2	
91	FBA3910000B2	HYD-LEVER 1, OUTSIDE	1	
92	FBA3920000B2	HYD-LEVER 2, OUTSIDE	1	

FIG S103 BRANSON 6530C	VALVE, REMOTE (CURRENT VERSION)	Year/Month 2020/02

KeyNo.	Part Number	Part Name	Quantity	Other
93	TA00015818A	KNOB, REMOTE HYD CONTROL 1	1	
94	26023-040102	SCREW W/WASHER	2	
95	TA00015820A	KNOB, REMOTE HYD CONTROL 2	1	
96	FTB1740000B4	HOOK	2	
97	22487-060160	PIN, HEAD (06-16)	2	
98	RR47070000A4	Pin, Come-Off Snap (Φ6)	2	
99	FBA3990000A4	COLLAR	1	

FIG S103-2 BRANSON 6530C	VALVE, REMOTE (OLD VERSION)	Year/Month 2020/02

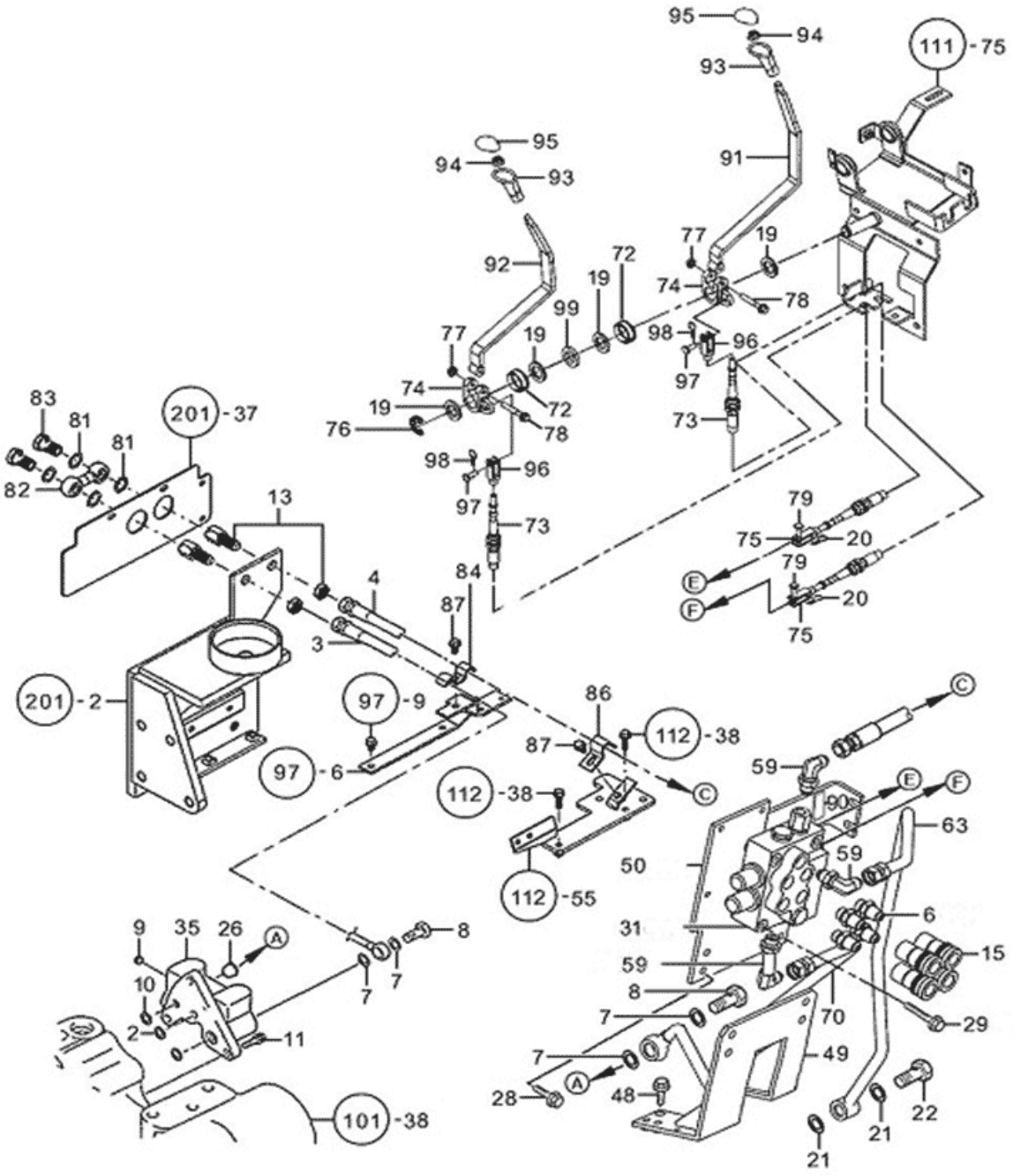

FIG S103-2 BRANSON 6530C	VALVE, REMOTE (OLD VERSION)	Year/Month 2020/02

KeyNo.	Part Number	Part Name	Quantity	Other
2	24315-000120	O-RING	1	
3	FBA3090000A3	HOSE B	1	
4	FBA3100000A3	HOSE A	1	
6	FBA3060000A4	ADAPTER (1/2")	4	
7	23414-200026	WASHER, PLAIN (Φ 20)	4	
8	TTB4180000A4	BOLT	2	
9	23871-020000	Plug, Pipe	1	
10	24315-000140	O-RING	2	
11	26013-080252	Bolt, Hexa (8-25)	3	
13	FBA3130000A4	CONNECTOR ASS'Y	2	
15	FBA3150000A3	QUICK COUPLER (1/2")	4	
19	TTB1190000A4	PLATE	4	
20	RR64050000A4	Pin, Come-Off Snap (Φ8)	2	
21	TTA1140000A4	PACKING	2	
22	FBA3930000A4	CONNECTOR	1	
26	TTA3260000A4	STRAINER	1	
28	26106-080202	SQR FLANGE BOLT	4	
29	26106-080602	SCREW,HEXFLANGEHEADCAP	3	
31	FBA3310000A3	SCV VALVE ASS'Y	1	
35	FTA3350000A2	BRACKET	1	
48	26106-100202	HEX BOLT, (10-20)	4	
49	FBA3490000A3	SCV BRACKET	1	
50	FBA3500000A2	VALVE BRACKET ASS'Y	1	
59	CEE4050000A4	ELBOW (3/8)	3	
63	FBA3630000A2	DRAIN PIPE	1	
70	FBA3700000A2	SCV PIPE	1	
72	24550-018150	DRY BUSH	2	
73	FBA3730000A3	SCV WIRE	2	
74	FBA3740000A4	ARM, SCV-LEVER	2	
75	FTA3770000A4	CLEVIS	2	
76	22272-000150	RING, CIRCLIP (Φ 15)	1	
77	26366-060002	Nut, Hexa (Φ6)	2	
78	FBA3780000A4	HEXAGON BOLT	2	
79	TTA3780000A4	PIN	2	
81	23414-180000	WASHER,SEALING	4	
82	FBA3B20000A3	CONNCETING PIPE, FRONT	1	
83	TT34200000A4	CONNECTOR	2	
84	FBA3B30000A4	CLAMP-REAR	1	
86	TTB4120000A4	CLAMP	1	
87	26106-080162	SCREW,HEXFLANGEHEADCAP	2	
90	FT06250000B4	TANK BRACKET PAD	2	
91	FBA3910000B2	HYD-LEVER 1, OUTSIDE	1	
92	FBA3920000A2	HYD-LEVER 2, OUTSIDE	1	
93	THB5305000A4	INSERT(KNOBCAP)	2	
94	26716-080002	NUT,HEX (D8)	2	

FIG S103-2 BRANSON 6530C	VALVE, REMOTE (OLD VERSION)	Year/Month 2020/02

KeyNo.	Part Number	Part Name	Quantity	Other
95	THB5307000A4	KNOB	2	
96	FTB1740000B4	HOOK	2	
97	22487-060160	PIN, HEAD (06-16)	2	
98	RR47070000A4	Pin, Come-Off Snap (Φ6)	2	
99	FBA3990000A4	COLLAR	1	

FIG S104 BRANSON 6530C	PISTON & LIFT LINK	Year/Month 2020/02

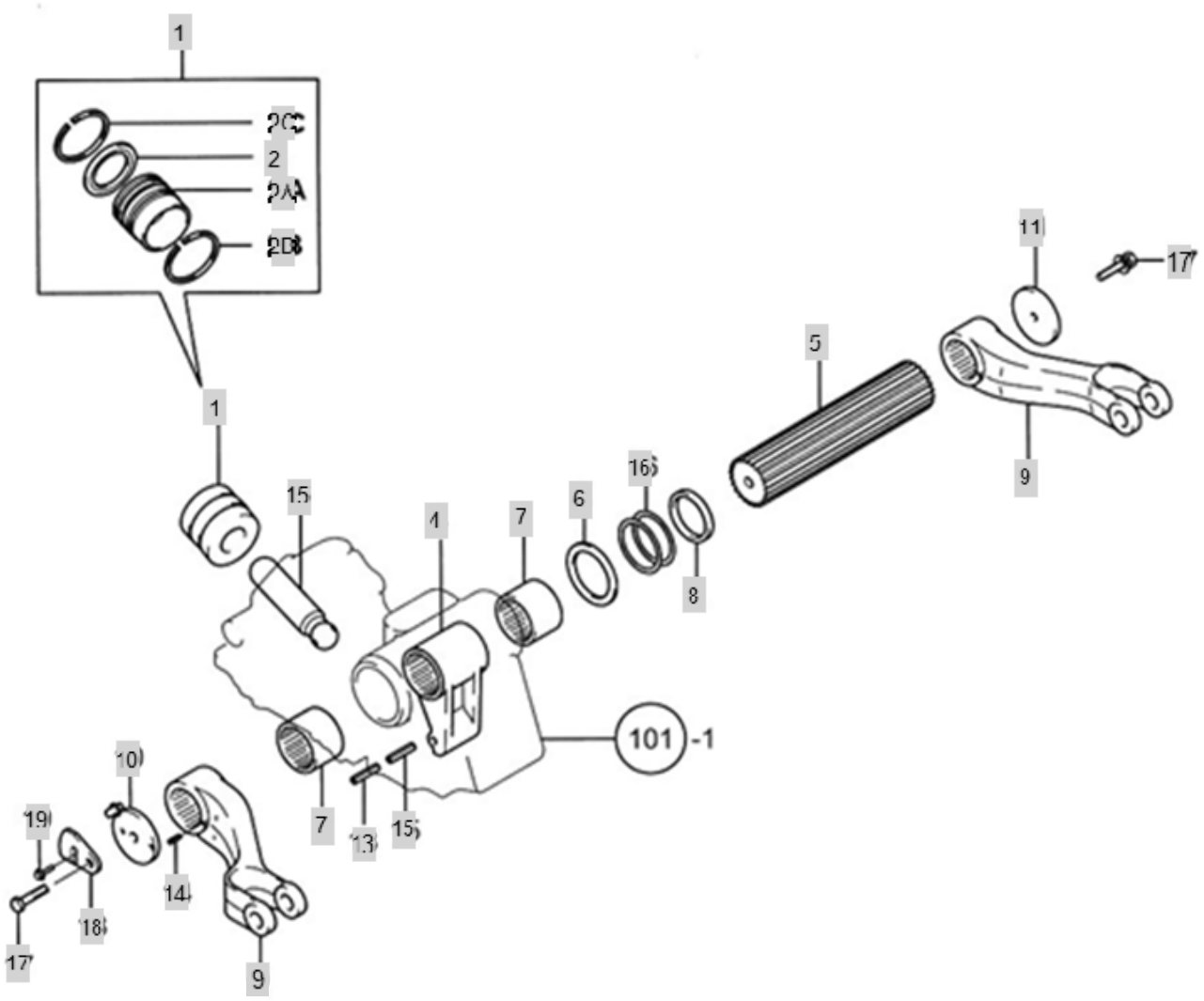

FIG S104 BRANSON 6530C	PISTON & LIFT LINK	Year/Month 2020/02

KeyNo.	Part Number	Part Name	Quantity	Other
1	FTA401A000A3	PISTON	1	
2	FTA4020000A9	U-PACKING	1	
3	TTA4030000A3	ROD,PISTON	1	
4	TTA4040000B3	CRANK, LIFT	1	
5	TTA4050000B3	LIFT LINK SHAFT	1	
6	TTA4060000A4	WASHERTHRUST	2	
7	TTA4070000A4	SLEEVELIFTLINKSHAFT	2	
8	TTA4080000A4	SEAL,SPLINE	2	
9	TTA4090000A3	LIFTARM	2	
10	FTA4100000A4	ARM, FEEDBACK	1	
11	TTA4110000A4	RETAINER,LIFTSHAFT	1	
13	22351-050063	PIN, SPRING (5-06)	1	
14	22351-060016	PIN, SPRING (6-16)	1	
15	22351-080063	PIN, SPRING (8-63)	1	
16	24321-000650	O-RING, FIX(Φ65)	4	
17	26013-120352	SCREW,CAPTIVEWASHERCAP	2	
18	FTA4180000A4	CAM	1	
19	26106-080122	Bolt, Hexa (8-12)	1	
2A	FTA401B000A4	WEARING	1	
2B	FTA4020000A9	U-PACKING	1	
2C	FTA4020000A9	U-PACKING	1	

FIG S106 BRANSON 6530C	CONTROL VALVE	Year/Month 2020/02

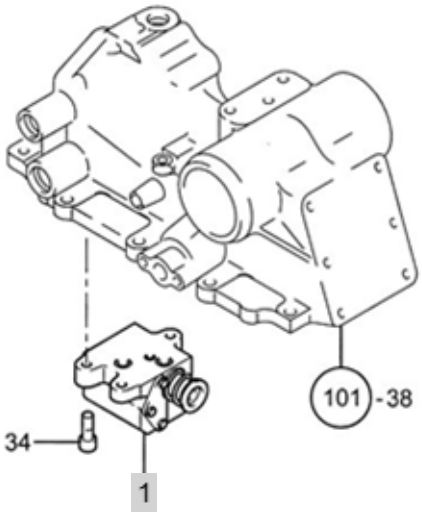

FIG S106 BRANSON 6530C	CONTROL VALVE	Year/Month 2020/02

KeyNo.	Part Number	Part Name	Quantity	Other
1	TTA6010000A3	CONTROL VALVE ASSY	1	

FIG S108 BRANSON 6530C	RELIEF VALVE	Year/Month 2020/02

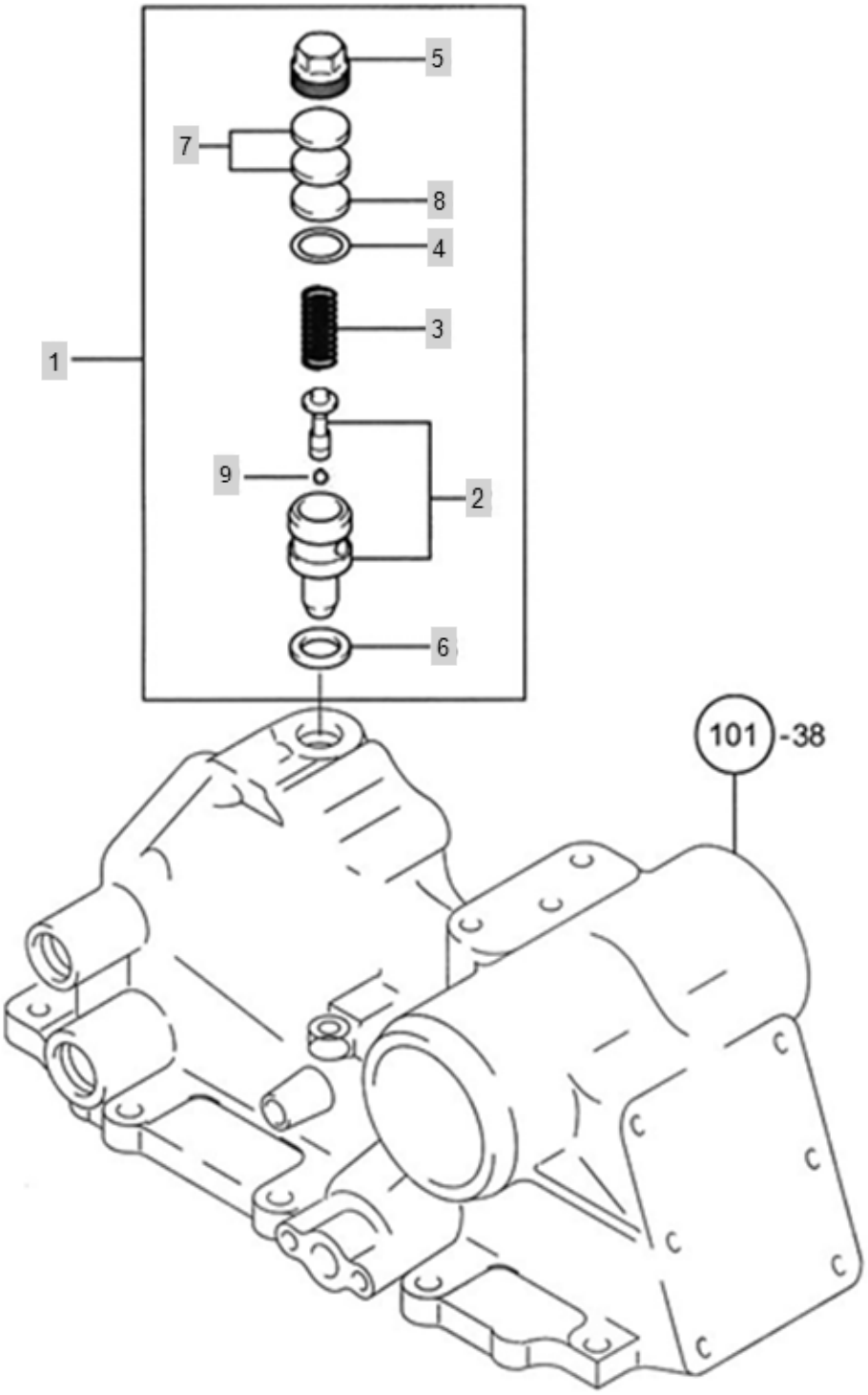

FIG S108 BRANSON 6530C	RELIEF VALVE	Year/Month 2020/02

KeyNo.	Part Number	Part Name	Quantity	Other
1	TTA8010000A3	VALVECMP.RELIEF	1	
2	TTA8020000A9	RELIEFVALVESEAT	1	
3	TTA8030000A9		1	
4	TTA8040000A9	O-RING	1	
5	TTA8050000A9		1	
6	TTA8060000A9	PACKING	1	
7	TTA8070000A9	SHIMASSY	1	
8	TTA8080000A4	SHIM	3	
9	24190-080003		1	

FIG S109 BRANSON 6530C	STOP VALVE	Year/Month 2020/02

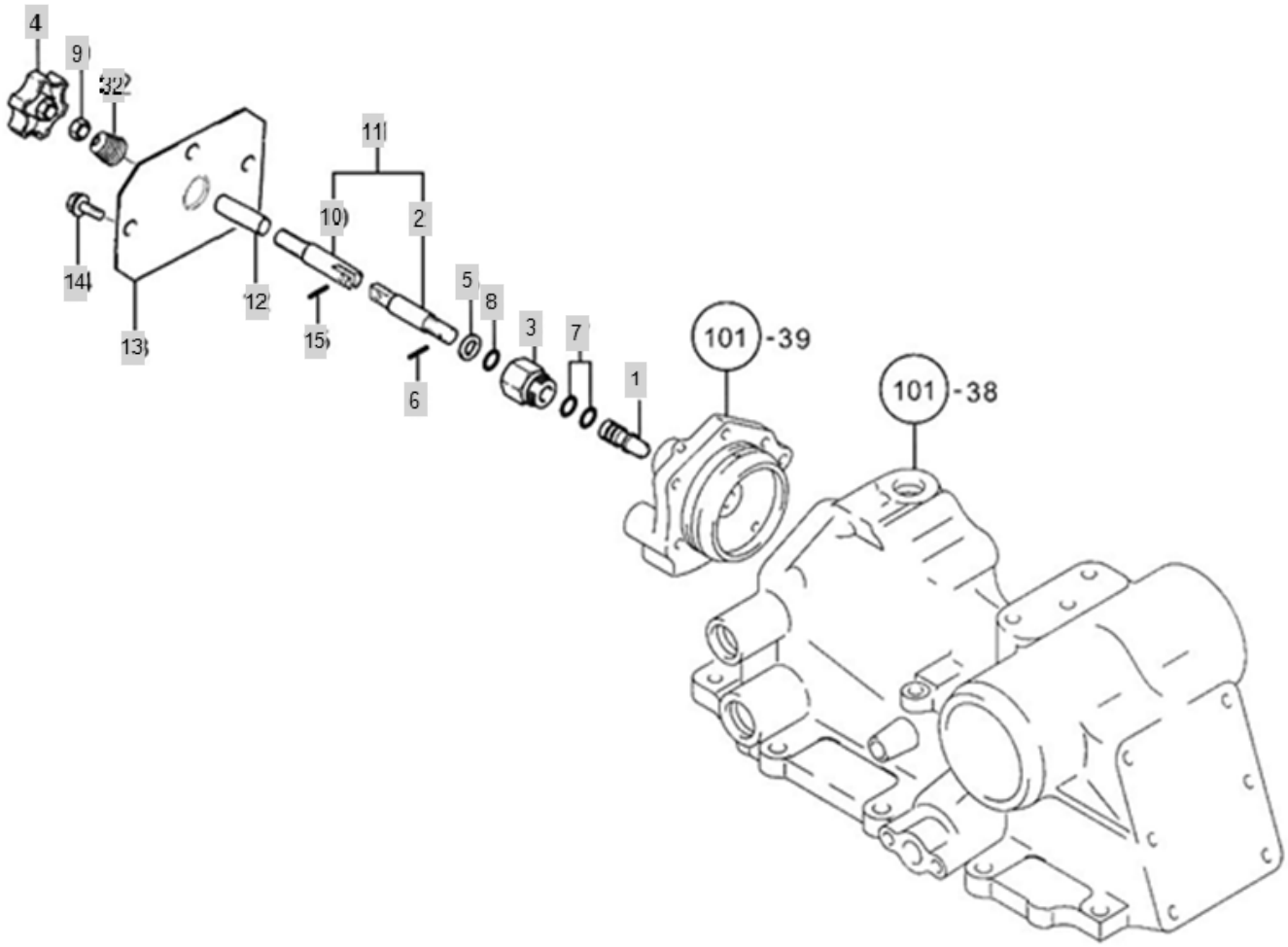

FIG S109 BRANSON 6530C	STOP VALVE	Year/Month 2020/02

KeyNo.	Part Number	Part Name	Quantity	Other
1	FTA9010000A4	STOP VALVE	1	
2	FBA9020000A4	STOP BOLT(LOWER)	1	
3	TTA9030000A4	HOLDER	1	
4	TTA9040000A4	KNOB	1	
5	22117-080000	WASHER, PLAIN (Φ 08)	1	
6	22351-040012	PIN, SPRING (4-01)	1	
7	24311-000110	O-RING, DYNAMIC (Φ11)	2	
8	24311-000120	O-RING, DYNAMIC (Φ12)	1	
9	26716-100002	Nut, Hexa (Φ10)	1	
10	FBA9100000A4	STOP BOLT(UPPER)	1	
11	FBA9110000A4	STOP BOLT ASSY	1	
12	FBA9120000B4	BAR	1	
13	FBA9130000B4	BRACKET	1	
14	26106-080162	SCREW,HEXFLANGEHEADCAP	3	
15	22351-040012	PIN, SPRING (4-01)	1	
32	FTE0300000A4	B0OTS	1	

FIG S110 BRANSON 6530C	SAFETY VALVE	Year/Month 2020/02

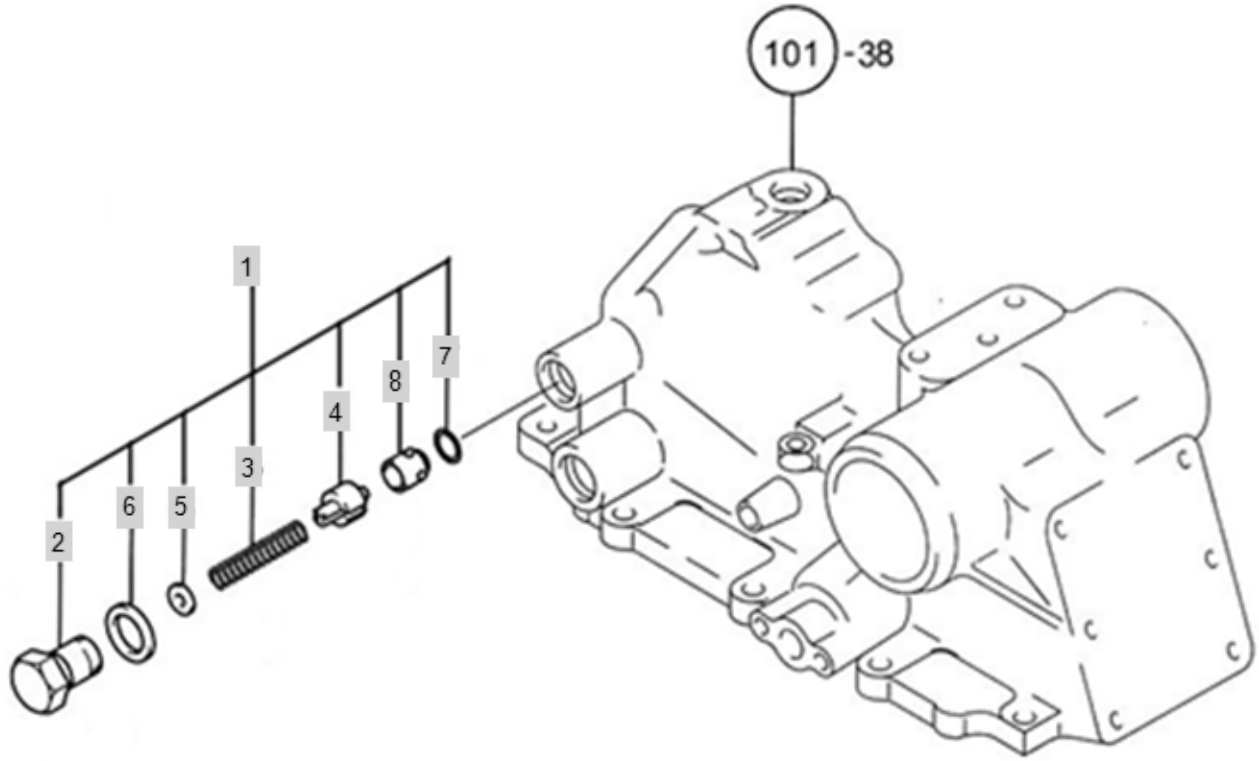

FIG S110 BRANSON 6530C	SAFETY VALVE	Year/Month 2020/02

KeyNo.	Part Number	Part Name	Quantity	Other
1	TTB0009999A9	SAFETY VALVE ASSY	1	
2	TTB0030000B4	PLUG,RELIEF VALVE	1	
3	TTB0010000A4	SPRING,RELIEFVALVE	1	
4	TTB0050000A4	POPPET,SAFETYVALVE	1	
5	TB36700000A4	SHIM	1	
6	24311-000180	O-RING, DYNAMIC (Φ18)	1	
7	24311-000120	O-RING, DYNAMIC (Φ12)	1	
8	TTB0040000A4	SEAT,SAFETYVALVE	1	

FIG S111 BRANSON 6530C	HYDRAULIC CONTROL (CURRENT VERSION)	Year/Month 2020/02

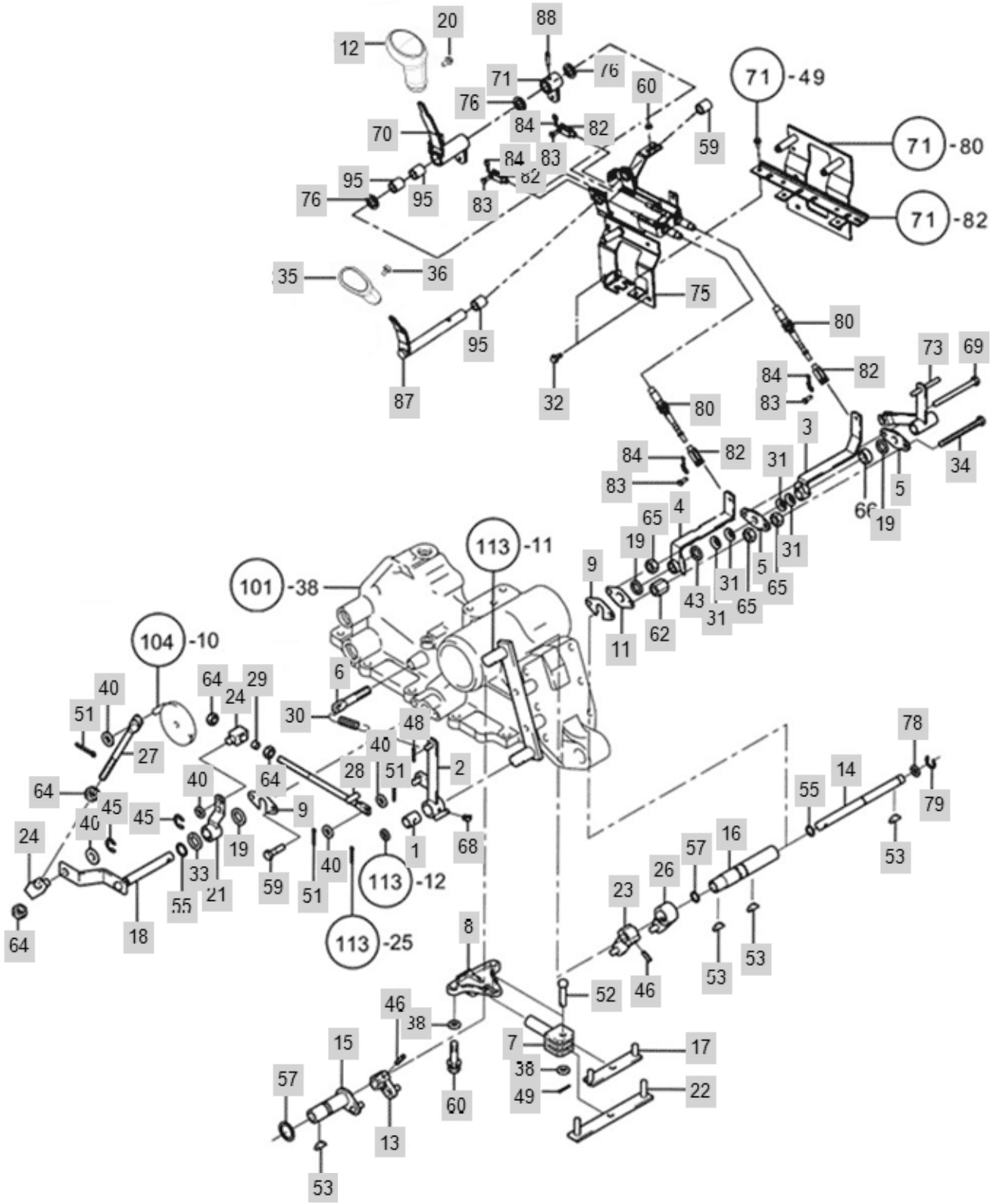

FIG S111 BRANSON 6530C	HYDRAULIC CONTROL (CURRENT VERSION)	Year/Month 2020/02

KeyNo.	Part Number	Part Name	Quantity	Other
1	TTB1010000B4	BUSH	1	
2	TTB1020000B3		1	
3	FTB1030000B3	ARM P, SHIFT	1	
4	FTB1040000B3	ARM D, SHIFT	1	
5	TCC6010000A4	PLATE	2	
6	TTB1060000A4	BRAKETSPRING	1	
7	TTB1070000A4	RODCONTRDL	1	
8	TTB1080000A3	PLATECONTRDL	1	
9	TTB1090000A4	PLATEA	2	
11	TTB1110000A4	PLATEB	1	
12	TA00015831A	KNOB, POSITION CONTROL	1	
13	TTB1130000A4	ARM(PCF)	1	
14	FTB1140000A3	SHAFT(P CONTROL)	1	
15	TTB1150000A4	ARMDRAFTCONTROL	1	
16	FTB1160000A4	SHAFT(D CONTROL)	1	
17	TTB1170000A4	BAR,DRAFTCONTROL	1	
18	TTB1180000A3	ARMPOSTIONCONTROL	1	
19	TTB1190000A4	PLATE	3	
20	26023-040102	SCREW W/WASHER	1	
21	TTB1210000A4	ARM,DRAFTCONTROL	1	
22	TTB1220000A4	BARDRAFTCONTROL	1	
23	TTB1230000A4	ARM,POSITIONCONTROL	1	
24	TTB1240000A4	ADJUSTER	2	
26	TTB1260000A4	ARM,DRAFTCONTROL	1	
27	FTB1270000A4	ROD, P	1	
28	TTB1280000A4	ROD,DRAFTFEEDBACK	1	
29	TTB1290000A4	COLLAR	1	
30	TTB1300000A4	SPRING,RETURN	1	
31	TCC6030000A4	WASHER 20	4	
32	26106-080162	SCREW,HEXFLANGEHEADCAP	2	
33	TTB1320000A4	PLATE,FRICTION	1	
34	26116-080804	HEXAGONBOLT	1	
35	TA00015806A	LEVER, D-CONTROL	1	
36	26023-040082	SCREW AND WASHER ASSEMBLY	1	
38	22137-080000	WASHER, PLAIN (Φ 08)	3	
40	22137-100000	WASHER, PLAIN (Φ 10)	5	
43	22137-180000	WASHER, PLAIN (Φ 18)	1	
45	22272-000070	RING, CIRCLIP (Φ 07)	2	
46	22351-050032	PIN, SPRING (5-03)	2	
48	22360-080000	PIN , SNAP (8Φ)	1	
49	22417-200200	PIN , COTTER (2-20)	1	
51	22417-300200	PIN , COTTER (3-20)	3	
52	22487-080350	PIN, HEAD (08-35)	1	
53	22522-030130	KEY, WOODRUFF (03-13)	4	
55	24311-000090	O-RING, DYNAMIC (Φ9)	2	

FIG S111 BRANSON 6530C	HYDRAULIC CONTROL (CURRENT VERSION)	Year/Month 2020/02

KeyNo.	Part Number	Part Name	Quantity	Other
57	24311-000160	O-RING, DYNAMIC (Φ16)	2	
59	26013-080162	Bolt, Hexa (8-16)	2	
60	26013-080202	Bolt, Hexa (8-20)	2	
62	TCC6250000A4	NUT8	1	
64	26716-100002	Nut, Hexa (Φ10)	4	
65	26716-080002	NUT,HEX (D8)	3	
66	TCC6120000A4	BUSH	1	
68	TA27160000A4	GREASE NIPPLE	1	
69	TCC6310000A4	BOLT	1	
70	FBB1700000B3	P-CONTROL LEVER	1	
73	FTB1730000B3	LEVER(BACK-UP)	1	
75	FBB1750000A1	BRACKET ASS'Y, SCV-LEVER	1	
76	TCC6030000A4	WASHER 20	5	
77	TA00000369A	SPACER	1	
78	22137-120000	WASHER, PLAIN (Φ 12)	1	
79	22272-000090	RING, CIRCLIP (Φ 09)	1	
80	FBB1800000A3	CABLE (P,D)	2	
81	TA00000381A	SPACER	1	
82	FTB1820000A4	YORK	4	
83	22487-060160	PIN, HEAD (06-16)	4	
84	RR47070000A4	Pin, Come-Off Snap (Φ6)	4	
85	TTB1190000A4	PLATE	4	
87	TA00000376B	D_CONTROL LEVER	1	
88	22550-050250	KEY, WOODRUFF (05-25)	1	
90	TA00000379A	D CONTROL LEVER	1	
95	24550-019150	BUSH	4	
96	26366-080002	Nut, Hexa (Φ8)	1	
98	22157-080000	WASHER, PLAIN (Φ 08)	1	
99	26347-080002	Unut	1	

FIG S111-2 BRANSON 6530C	HYDRAULIC CONTROL (OLD VERSION)	Year/Month 2020/02

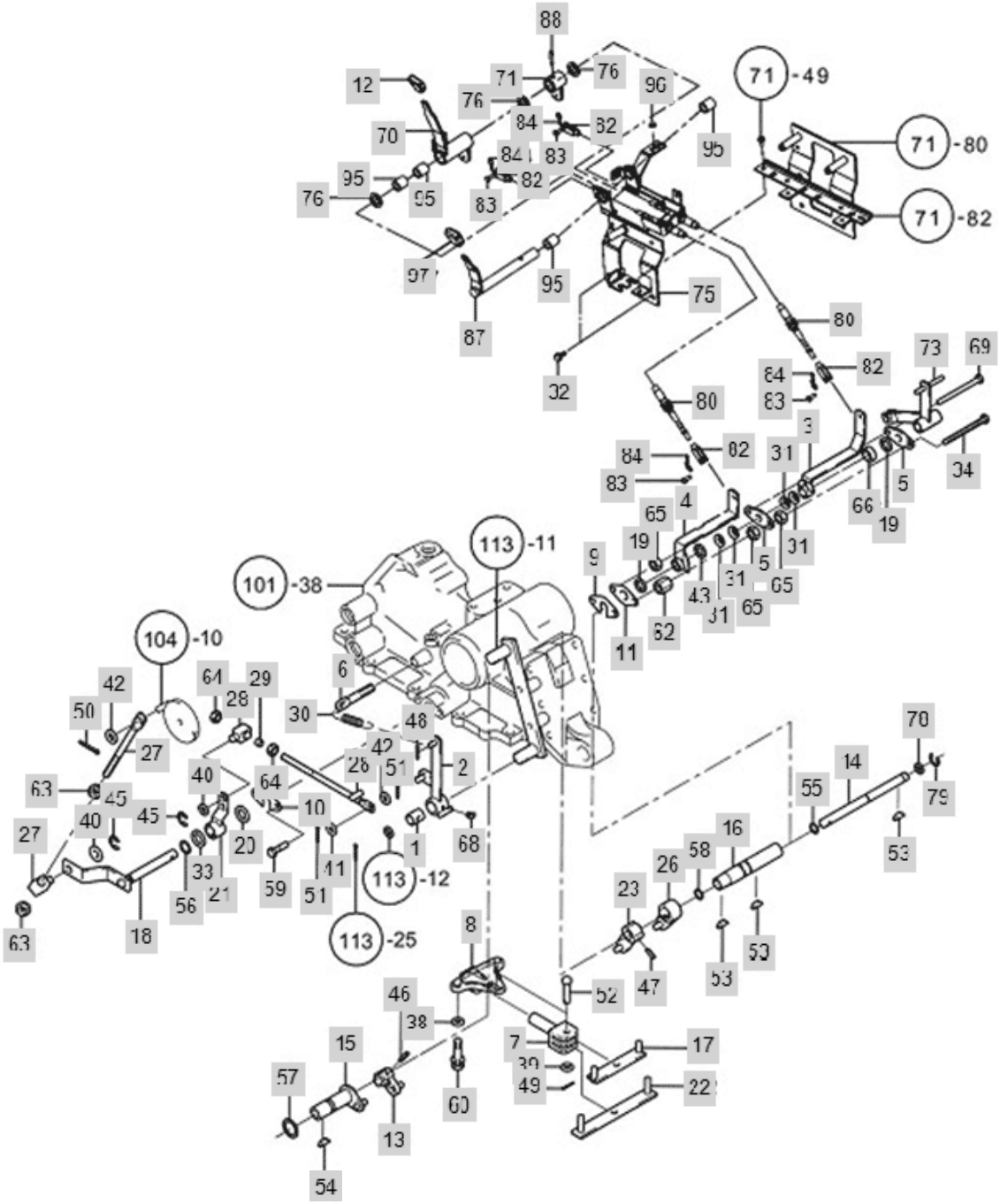

FIG S111-2 BRANSON 6530C	HYDRAULIC CONTROL (OLD VERSION)	Year/Month 2020/02

KeyNo.	Part Number	Part Name	Quantity	Other
1	TTB1010000B4	BUSH	1	
2	TTB1020000B3		1	
3	FTB1030000B3	ARM P, SHIFT	1	
4	FTB1040000B3	ARM D, SHIFT	1	
5	TCC6010000A4	PLATE	2	
6	TTB1060000A4	BRAKETSPRING	1	
7	TTB1070000A4	RODCONTRDL	1	
8	TTB1080000A3	PLATECONTRDL	1	
9	TTB1090000A4	PLATEA	1	
10	TTB1090000A4	PLATEA	1	
11	TTB1110000A4	PLATEB	1	
12	THB5216000A3	SCV LEVER KNOB	1	
13	TTB1130000A4	ARM(PCF)	1	
14	FTB1140000A3	SHAFT(P CONTROL)	1	
15	TTB1150000A4	ARMDRAFTCONTROL	1	
16	FTB1160000A4	SHAFT(D CONTROL)	1	
17	TTB1170000A4	BAR,DRAFTCONTROL	1	
18	TTB1180000A3	ARMPOSTIONCONTROL	1	
19	TTB1190000A4	PLATE	2	
20	TTB1190000A4	PLATE	1	
21	TTB1210000A4	ARM,DRAFTCONTROL	1	
22	TTB1220000A4	BARDRAFTCONTROL	1	
23	TTB1230000A4	ARM,POSITIONCONTROL	1	
24	TTB1240000A4	ADJUSTER	1	
25	TTB1240000A4	ADJUSTER	1	
26	TTB1260000A4	ARM,DRAFTCONTROL	1	
27	FTB1270000A4	ROD, P	1	
28	TTB1280000A4	ROD,DRAFTFEEDBACK	1	
29	TTB1290000A4	COLLAR	1	
30	TTB1300000A4	SPRING,RETURN	1	
31	TCC6030000A4	WASHER 20	4	
32	26106-080162	SCREW,HEXFLANGEHEADCAP	2	
33	TTB1320000A4	PLATE,FRICTION	1	
34	26116-080804	HEXAGONBOLT	1	
38	22137-080000	WASHER, PLAIN (Φ 08)	2	
39	22137-080000	WASHER, PLAIN (Φ 08)	1	
40	22137-100000	WASHER, PLAIN (Φ 10)	2	
41	22137-100000	WASHER, PLAIN (Φ 10)	1	
42	22137-100000	WASHER, PLAIN (Φ 10)	2	
43	22137-180000	WASHER, PLAIN (Φ 18)	1	
45	22272-000070	RING, CIRCLIP (Φ 07)	2	
46	22351-050032	PIN, SPRING (5-03)	1	
47	22351-050032	PIN, SPRING (5-03)	1	
48	22360-080000	PIN , SNAP (8Φ)	1	
49	22417-200200	PIN , COTTER (2-20)	1	

FIG S111-2 BRANSON 6530C	HYDRAULIC CONTROL (OLD VERSION)	Year/Month 2020/02

KeyNo.	Part Number	Part Name	Quantity	Other
50	22417-300200	PIN , COTTER (3-20)	1	
51	22417-300200	PIN , COTTER (3-20)	2	
52	22487-080350	PIN, HEAD (08-35)	1	
53	22522-030130	KEY, WOODRUFF (03-13)	3	
54	22522-030130	KEY, WOODRUFF (03-13)	1	
55	24311-000090	O-RING, DYNAMIC (Φ9)	1	
56	24311-000090	O-RING, DYNAMIC (Φ9)	1	
57	24311-000160	O-RING, DYNAMIC (Φ16)	1	
58	24311-000160	O-RING, DYNAMIC (Φ16)	1	
59	26013-080162	Bolt, Hexa (8-16)	2	
60	26013-080202	Bolt, Hexa (8-20)	2	
62	TCC6250000A4	NUT8	1	
63	26716-100002	Nut, Hexa (Φ10)	2	
64	26716-100002	Nut, Hexa (Φ10)	2	
65	26716-080002	NUT,HEX (D8)	3	
66	TCC6120000A4	BUSH	1	
68	TA27160000A4	GREASE NIPPLE	1	
69	TCC6310000A4	BOLT	1	
70	FBB1700000A3	P-CONTROL LEVER	1	
71	FBB1710000A4	D-CONTROL ARM	1	
73	FTB1730000B3	LEVER(BACK-UP)	1	
75	FBB1750000A1	BRACKET ASS'Y, SCV-LEVER	1	
76	TTB1190000A4	PLATE	3	
78	22137-120000	WASHER, PLAIN (Φ 12)	1	
79	22272-000090	RING, CIRCLIP (Φ 09)	1	
80	FBB1800000A3	CABLE (P,D)	2	
82	FTB1820000A4	YORK	4	
83	22487-060160	PIN, HEAD (06-16)	4	
84	RR47070000A4	Pin, Come-Off Snap (Φ6)	4	
85	TTB1190000A4	PLATE	4	
87	FBB1870000A3	D-CONTROL LEVER	1	
88	22351-060032	PIN, SPRING (6-32)	1	
95	24550-019150	BUSH	4	
96	26366-080002	Nut, Hexa (Φ8)	1	
97	TT29260000A4	KNOB	1	

FIG S112 BRANSON 6530C	BACK-UP	Year/Month 2020/02

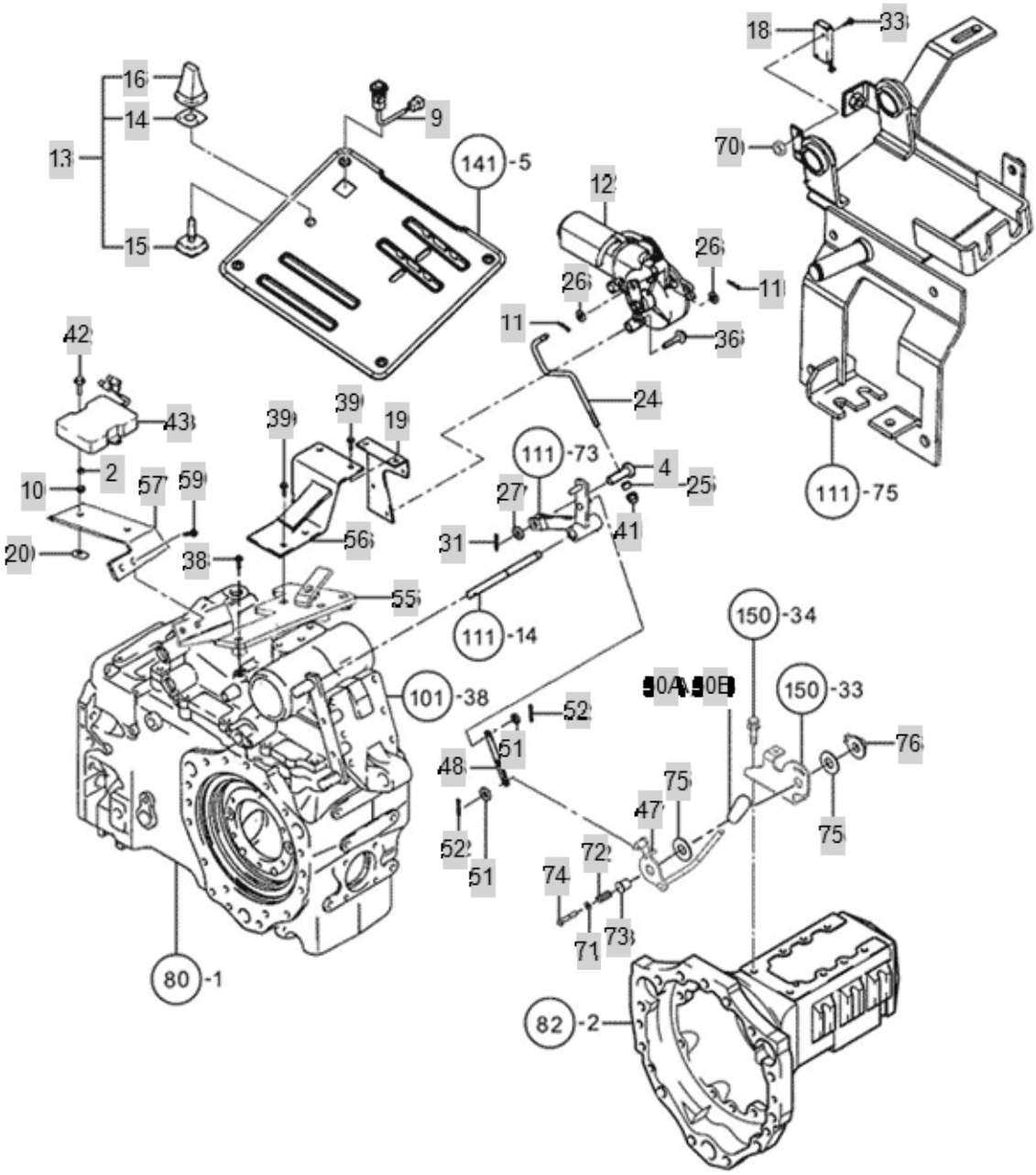

FIG S112 BRANSON 6530C	BACK-UP	Year/Month 2020/02

KeyNo.	Part Number	Part Name	Quantity	Other
2	TCE2020000A4	SPACER	2	
4	TCE2040000A4	PIN	1	
9	TCE2090000A3	LAMP SWITCH	1	
10	TCE2010000A4	GROMMET	2	
11	RR47070000A4	Pin, Come-Off Snap (Φ6)	2	
12	TCE2120000A1	MOTOR	1	
13	TCE2150000A9	SWITCH,TOGEL	1	
14	TCE2140000A4	WASHER(SWITCH,CONTROL)	1	
15	TCE2150000A9	SWITCH,TOGEL	1	
16	TCE2160000A3	KNOB(SWITCH,CONTROL)	1	
18	TCE2180000A4	SWITCH	1	
19	TCE2190000A4	STAY(BACK-UP MOTOR)	1	
20	TCE2200000A4	FLANGE NUT	2	
24	TCE2240000C4	BACK UP LOAD	1	
25	TCE2250000A4	COLLAR	1	
26	22137-060000	WASHER , PLAIN	2	
27	22137-120000	WASHER, PLAIN (Φ 12)	1	
31	22417-200300	PIN , COTTER (2-30)	1	
33	26023-030202	Screw, (3-20)	2	
36	26106-060252	Screw, (6-25)	3	
38	26106-080252	SCREW,HEXFLANGEHEADCAP	2	
39	26106-080162	SCREW,HEXFLANGEHEADCAP	4	
41	26347-060002	NUT6	1	
42	26557-060302	SCREW, SCREEN FIX	2	
43	FTC5430000A2	BACK-UP RELAY	1	
47	FBB2470000A2	POSITION LEVER(OUTER CONTROL)	1	
48	FTB2480000A4	ROD	1	
50A	TA00015795A	LEVER	1	
50B	KS61090000A4	KNOB(LEVER)	1	
51	22157-060000	WASHER, PLAIN (Φ 06)	2	
52	22417-160220	PIN , COTTER (1-22)	2	
55	FTB2550000C2	BACK-UP BRACKET ASS'Y	1	
56	FTB2560000C3	BRACKET, BACK-UP MOTOR	1	
57	FTB2570000A4	UNIT BRACKET	1	
59	26106-060122	HEX BOLT (6-12)	2	
70	26716-030002	NUT	2	
71	22137-080000	WASHER, PLAIN (Φ 08)	1	
72	THB5129000A4	SPRING	1	
73	THB5130000B4		1	
74	26116-080454	BOLT	1	
75	THB5132000A4	Friction Plate	2	
76	THB5133000A4	PLATE	1	

FIG S113 BRANSON 6530C	DRAFT CONTROL	Year/Month 2020/02

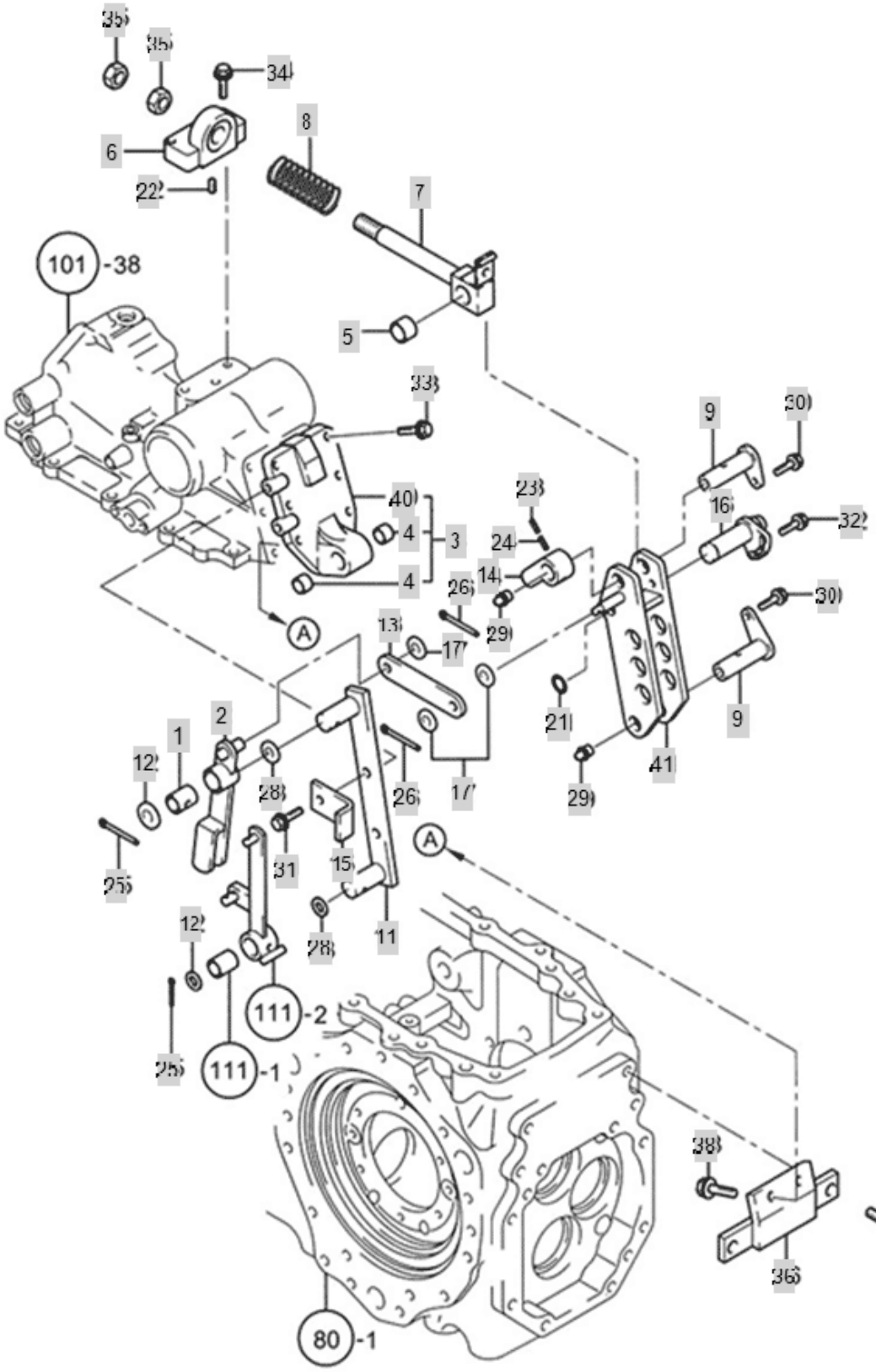

FIG S113 BRANSON 6530C	DRAFT CONTROL	Year/Month 2020/02

KeyNo.	Part Number	Part Name	Quantity	Other
1	TTB1010000B4	BUSH	1	
2	TTB3020000A3	LINKDF	1	
3	TTB3030000A4	HINGE.D.ASS`Y,SUPPORT	1	
4	TT67120000A4	BUSH	2	
5	TT67120000A4	BUSH	1	
6	TTB3060000B3	SENSOR SPRING HOLDER	1	
7	FTB3070000A3	BOLT ASS'Y, SPRING SENSOR	1	
8	TTB3080000A4	SENSOR SPRING	1	
9	TTB3090000A4	PIN,HINGE	2	
11	TTB3110000A4	PLATE	1	
12	TTB3120000A4	SPACER	2	
13	TTB3130000A4	PLATELINK	1	
14	TTB3140000A4	CAMDRAFTRID	1	
15	TTB3150000A4	STOPPERDRAFTLINK	1	
16	TTB3160000A4	SHAFTLOCK	1	
17	22137-100000	WASHER, PLAIN (Φ 10)	3	
21	22272-000150	RING, CIRCLIP (Φ 15)	1	
22	22312-100180	PIN, DOWEL (10-18)	1	
23	22351-035032	PIN, SPRING (3.5-32)	1	
24	22351-060032	PIN, SPRING (6-32)	1	
25	22417-250250	PIN , COTTER (2-25)	2	
26	22417-300200	PIN , COTTER (3-20)	2	
28	23414-160000	WASHER,SEALING	2	
29	TA27160000A4	GREASE NIPPLE	2	
30	26013-080162	Bolt, Hexa (8-16)	2	
31	26013-080202	Bolt, Hexa (8-20)	2	
32	26014-080202	Bolt, Hexa (8-20)	1	
33	26013-120352	SCREW,CAPTIVEWASHERCAP	6	
34	26013-120352	SCREW,CAPTIVEWASHERCAP	2	
35	26716-160002	NUT	2	
36	FTB3360000A3	HINGE STAY	1	
38	26013-120302	HEX BOLT W/WASHER	4	
40	TTB3030011A2		1	
41	FTB3410000A2	HINGE, TOP LINK	1	

FIG S114-2 BRANSON 6530C	HYD PIPE (6530)	Year/Month 2020/02

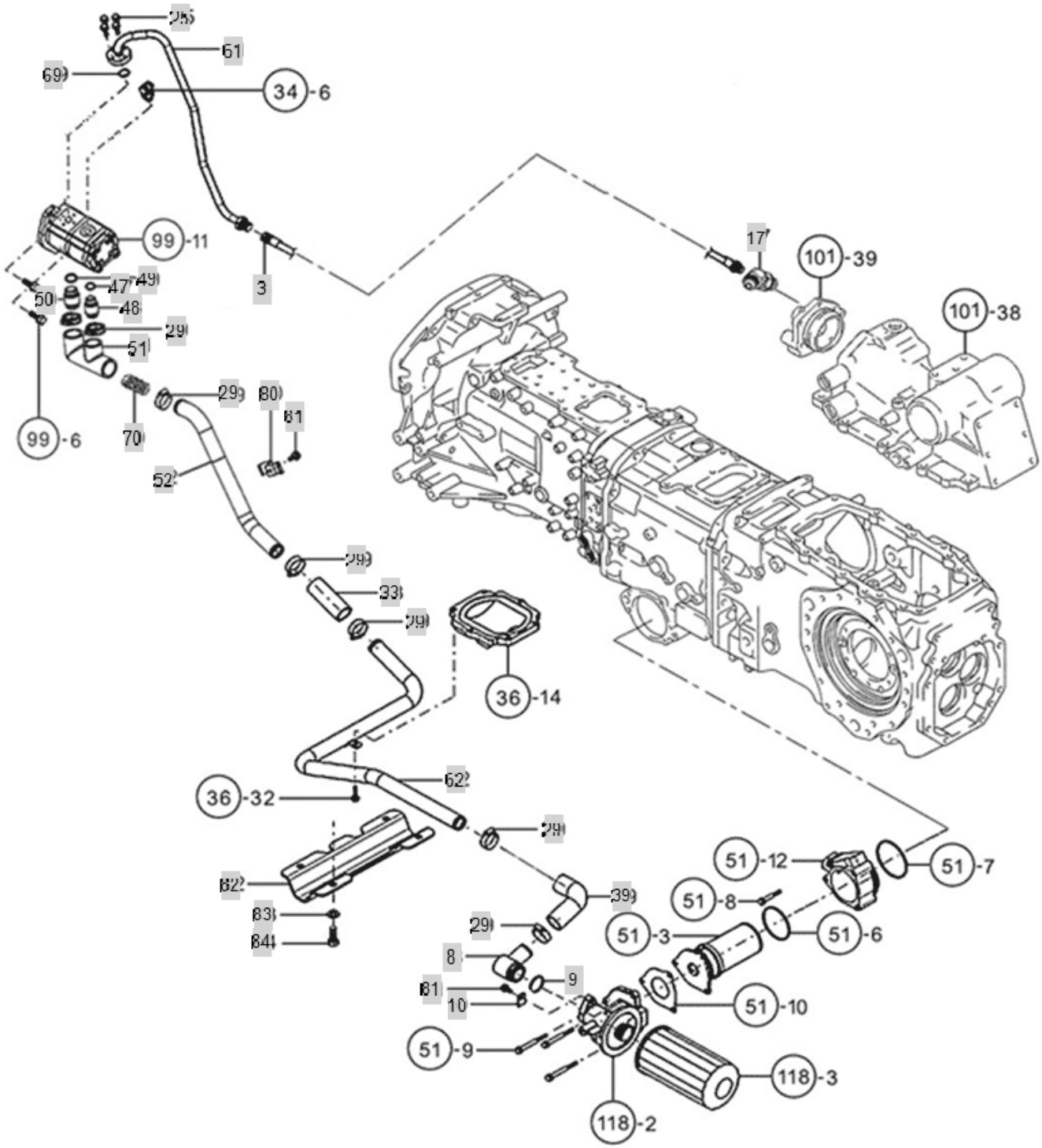

FIG S114-2 BRANSON 6530C	HYD PIPE (6530)	Year/Month 2020/02

KeyNo.	Part Number	Part Name	Quantity	Other
3	FBB4030000B3	HOSE	1	
8	FTB4080000B4	PIPE(R)ASSY, LOWER PRESSURE	1	
9	24311-000320	O-RING, DYNAMIC (Φ32)	1	
10	TTB4100000A4	PLATE	1	
17	FBB4170000A4	ELBOW	1	
25	26106-080402	SCREW,HEXFLANGEHEADCAP	4	
29	23010-040000	HOSEBAND	7	
33	FBB4330000A3	HOSE	1	
39	FT80390000B4	HOSEC,LOWERPRESS.	1	
47	24311-000180	O-RING, DYNAMIC (Φ18)	1	
48	TCC9040000A4	JOINT M22	1	
49	24311-000240	O-RING, DYNAMIC (Φ24)	1	
50	FBB4500000A4	JOINT 3/4	1	
51	FBB4510000A3	HOSE, LOWER PRESSURE	1	
52	TA00016547A	PIPE(F), LOWER PRESSURE	1	
61	TA00016544A	PIPE(F),HIGH PRESSURE	1	
62	FBB4620000A0	LOW PRESSURE PIPE REAR	1	
69	24311-000200	O-RING, DYNAMIC (Φ20)	1	
70	FTB4700000B4	SPRING	1	
80	FBB4800000A3	BRACKET, PIPE	1	
81	26106-080162	SCREW,HEXFLANGEHEADCAP	2	
82	FBB4820000A2	BRACKET, HYD-PIPE(REAR)	1	
83	22217-140000	WASHER, SPRING (Φ 14)	4	
84	26116-140252	BOLT	4	

FIG S114-3 BRANSON 6530C	HYD PIPE (6530-OLD VERSION)	Year/Month 2020/02

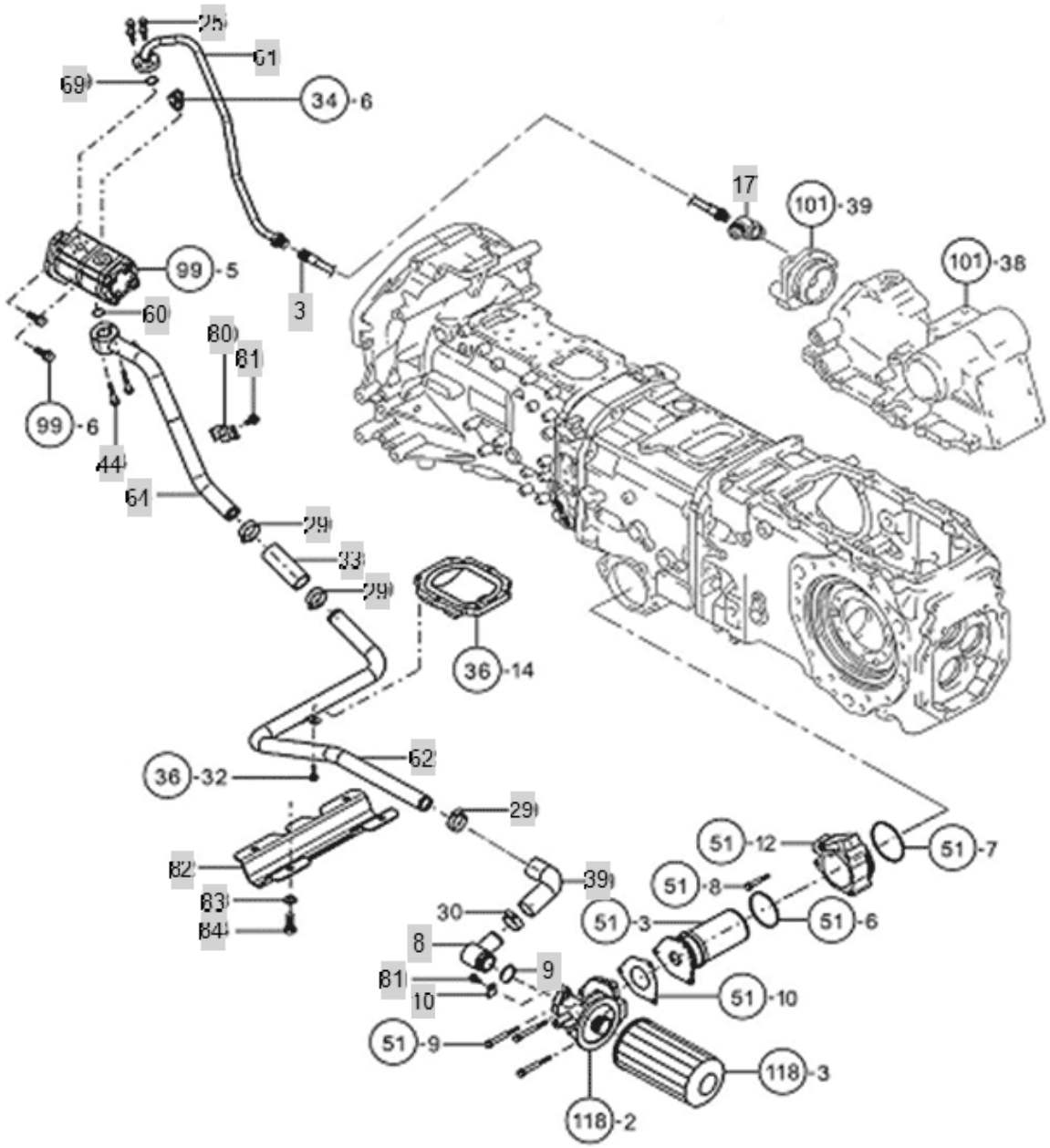

FIG S114-3 BRANSON 6530C	HYD PIPE (6530-OLD VERSION)	Year/Month 2020/02

KeyNo.	Part Number	Part Name	Quantity	Other
3	FBB4030000B3	HOSE	1	
8	FTB4080000B4	PIPE(R)ASSY, LOWER PRESSURE	1	
9	24311-000320	O-RING, DYNAMIC (Φ32)	1	
10	TTB4100000A4	PLATE	1	
17	FBB4170000A4	ELBOW	1	
25	26106-080202	SQR FLANGE BOLT	4	
29	23010-040000	HOSEBAND	7	
33	FBB4330000A3	HOSE	1	
39	FT80390000B4	HOSEC,LOWERPRESS.	1	
44	26106-080502	SCREW,HEXFLANGEHEADCAP	2	
47	24311-000180	O-RING, DYNAMIC (Φ18)	1	
48	TCC9040000A4	JOINT M22	1	
49	24311-000240	O-RING, DYNAMIC (Φ24)	1	
50	FBB4500000A4	JOINT 3/4	1	
51	FBB4510000A3	HOSE, LOWER PRESSURE	1	
52	FBB4520000A1	PIPE	1	
60	24341-000260	O-RING, FIX (Φ26)	1	
61	FBB4610000A0	HIGH PIPE SET FRONT	1	
62	FBB4620000A0	LOW PRESSURE PIPE REAR	1	
64	FBB4640000B0	HYD-PIPE, FRONT	1	
69	24311-000200	O-RING, DYNAMIC (Φ20)	1	
80	FBB4800000A3	BRACKET, PIPE	1	
81	26106-080162	SCREW,HEXFLANGEHEADCAP	2	
82	FBB4820000A2	BRACKET, HYD-PIPE(REAR)	1	
83	22217-140000	WASHER, SPRING (Φ 14)	4	
84	26116-140252	BOLT	4	

FIG S118 BRANSON 6530C	HYD FILTER	Year/Month 2020/02

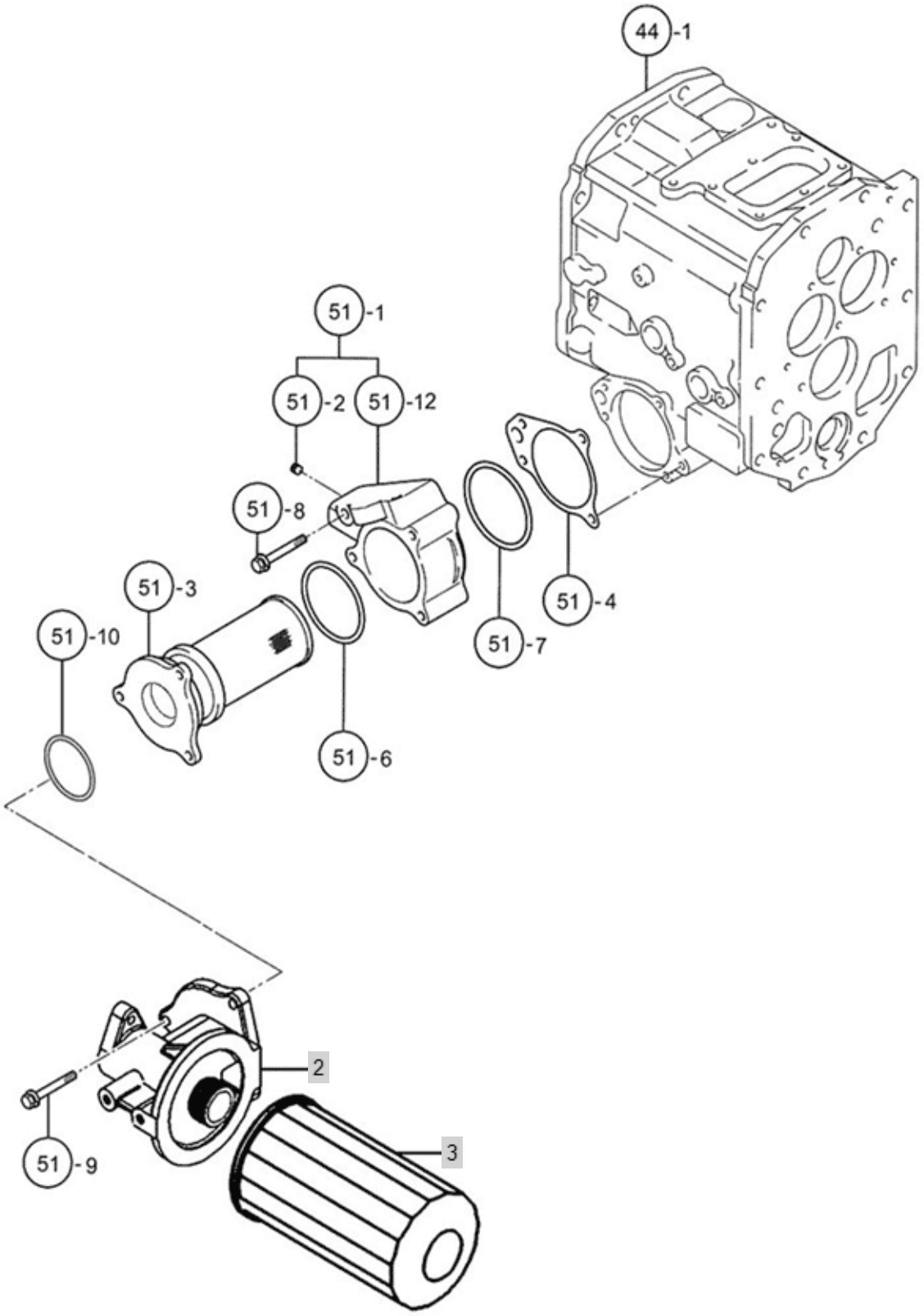

FIG S118 BRANSON 6530C	HYD FILTER	Year/Month 2020/02

KeyNo.	Part Number	Part Name	Quantity	Other
2	FBB8020000A1	FILTER COVER	1	
3	FTB8030000C9	FILTER, HYDRAULIC OIL (30/40 SERIES)	1	

FIG S119 BRANSON 6530C	WIRE HARNESS	Year/Month 2020/02

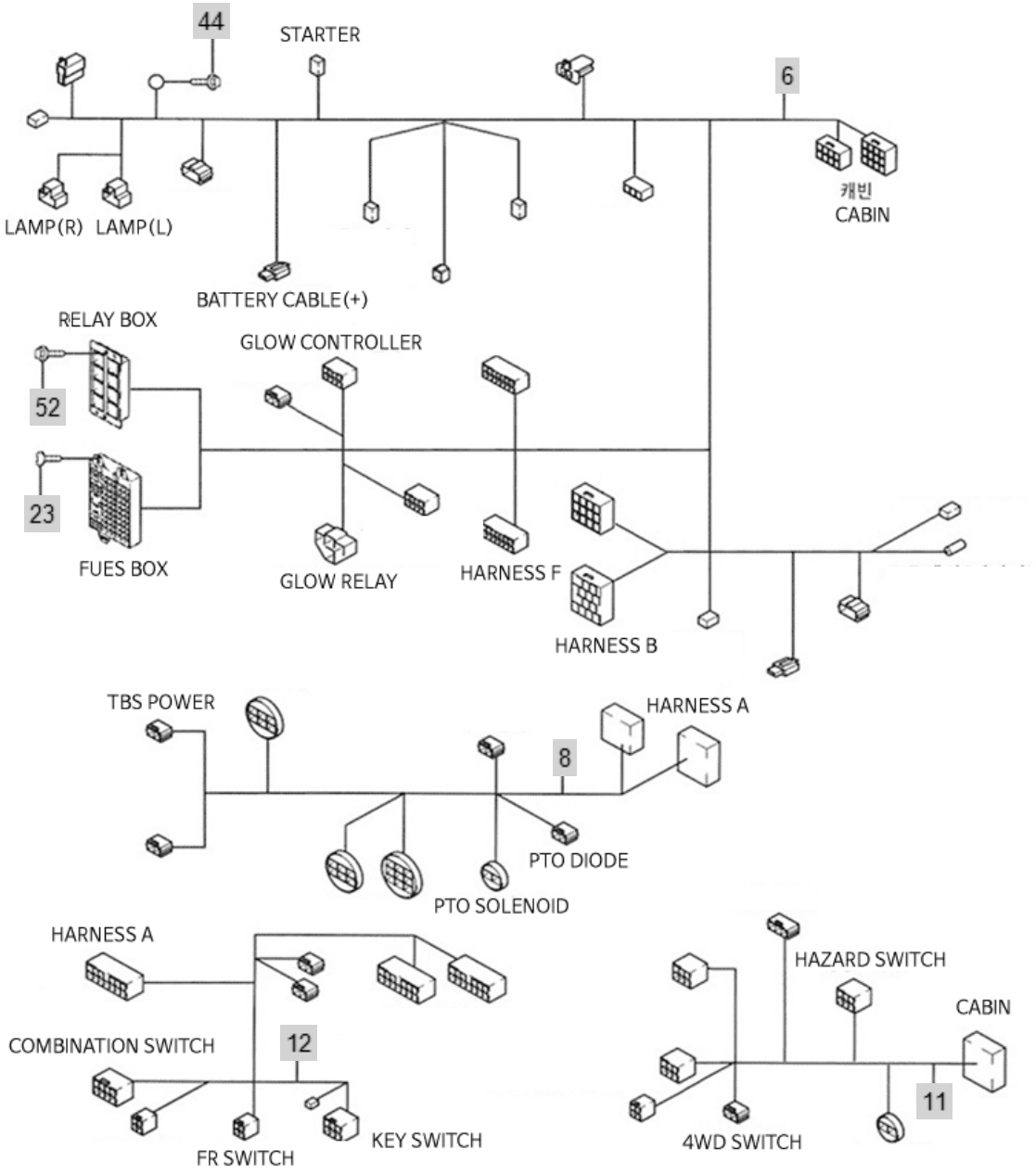

FIG S119 BRANSON 6530C	WIRE HARNESS	Year/Month 2020/02

KeyNo.	Part Number	Part Name	Quantity	Other
6	FBB9060000B0	WIRE HARNESS A	1	
8	FBB9080000A2	WIRE HARNESS B	1	
11	FBB9110000A3	WIRE HARNESS E	1	
12	FBB9120000C2	WIRE HARNESS F	1	
23	26023-050162	Screw (5-16)	2	
44	26106-080122	Bolt, Hexa (8-12)	1	
52	26106-060202	HEXFLANGEBOLT	2	

FIG S120 BRANSON 6530C	ELECTRIC COMPONENTS	Year/Month 2020/02

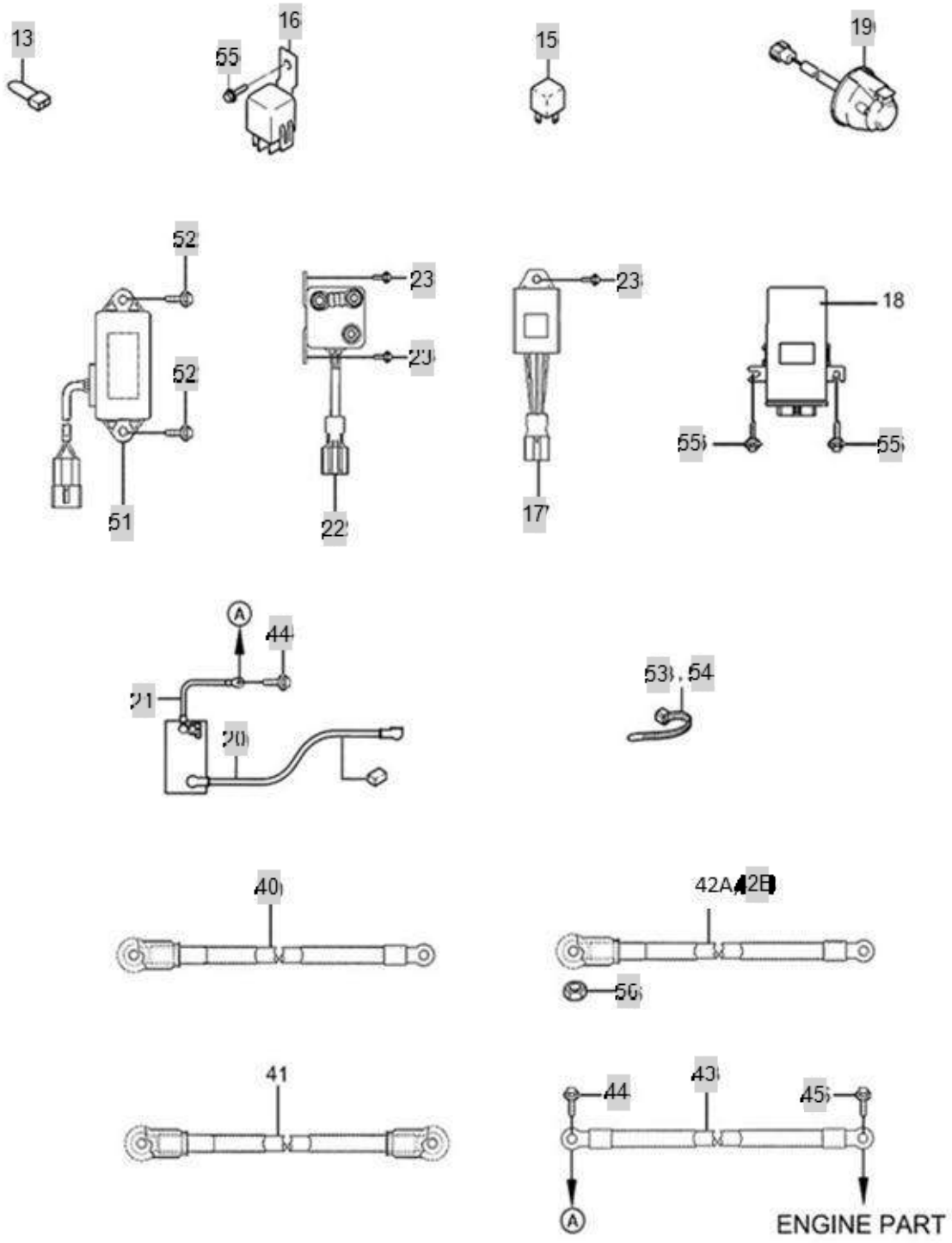

FIG S120 BRANSON 6530C	ELECTRIC COMPONENTS	Year/Month 2020/02

KeyNo.	Part Number	Part Name	Quantity	Other
13	CEH3160000A4	FUSIBLE LINK 0.85	2	
15	FTC5130000A3	RELAY(5P)	8	
16	FTB9160000A3	GLOW RELAY (12V-70A)	2	
17	FBB9170000A3	CONTROLLER	1	
19	TZB9440000A3	TRAILERSOCKET	1	
20	FTB9370000A3	BATTERY CABLE(+)	1	
21	FTB9380000B3	BATTERY CABLE(-)	1	
22	FBB9160000A3	RELAY	2	
23	26023-050162	Screw (5-16)	3	
40	FBB9400000A3	CABLE	1	
42B	FBB9420000A3	CABLE, CHARGE	1	
43	FBB9430000A3	GROUND WIRE	1	
44	26106-080122	Bolt, Hexa (8-12)	2	
45	26106-100122	HEXFLANGEBOLT	1	
51	NTC5510000A3	FLASH RELAY	1	
52	26106-060202	HEXFLANGEBOLT	2	
53	TTB9420000A4	Band, Wire (250mm)	10	
54	CEH3370000A4	NYLON BAND 350	2	
55	26106-060122	HEX BOLT (6-12)	2	
56	26366-060002	Nut, Hexa (Φ6)	1	
57	HA00000140A	PARKING UNIT	1	
58	RN66310000A3	Buzzer	1	
68	CE04010000A9	Unit, Realy	1	
69	26013-060142	Bolt, Hexa (6-14)	2	
70	26013-060169	BOLT(+SW)	2	

FIG S121-2 BRANSON 6530C	GUIDE, WIRE HARNESS (6530C,6530R)	Year/Month 2020/02

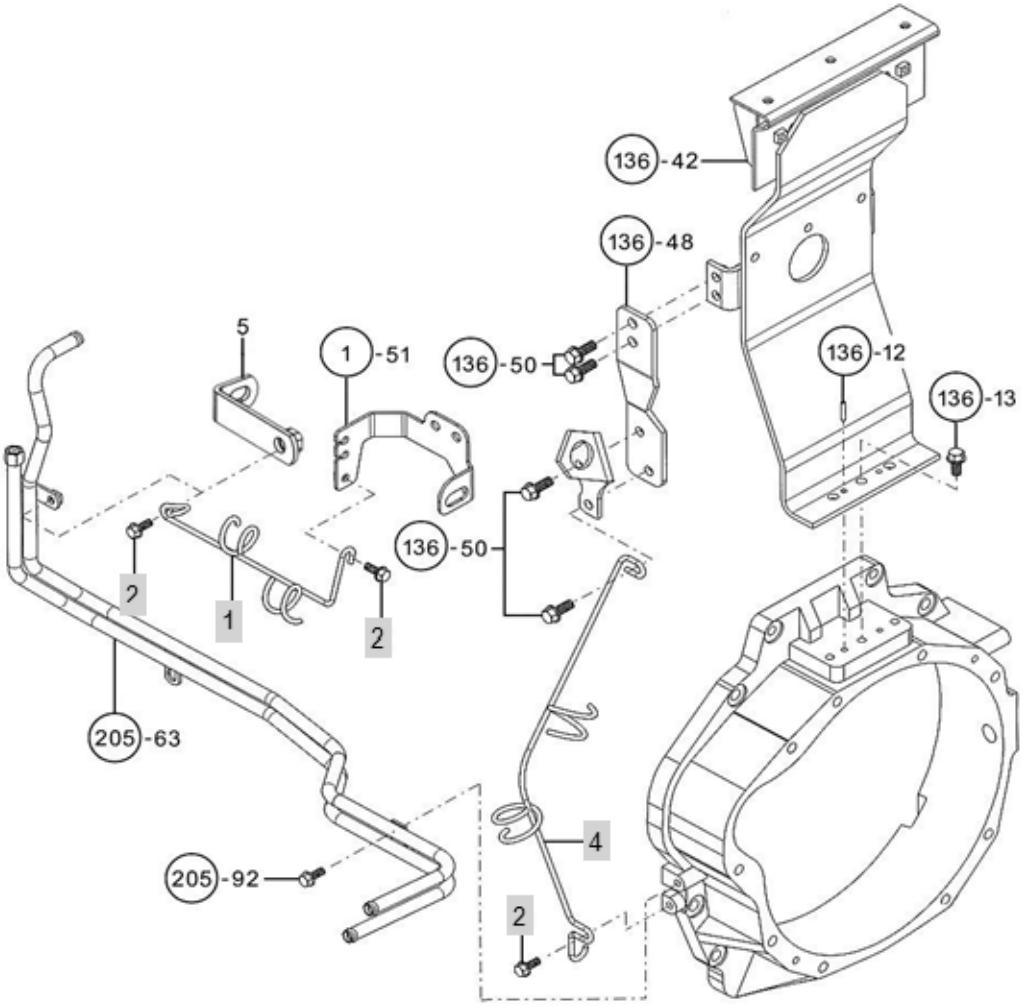

FIG S121-2 BRANSON 6530C	GUIDE, WIRE HARNESS (6530C,6530R)	Year/Month 2020/02

KeyNo.	Part Number	Part Name	Quantity	Other
1	FBC1010000A1	WIRING GUARD ASSY A	1	
2	26106-080162	SCREW,HEXFLANGEHEADCAP	3	
4	FBC1040000A0	WIRING GUARD ASSY C	1	

FIG S124 BRANSON 6530C	BATTERY	Year/Month 2020/02

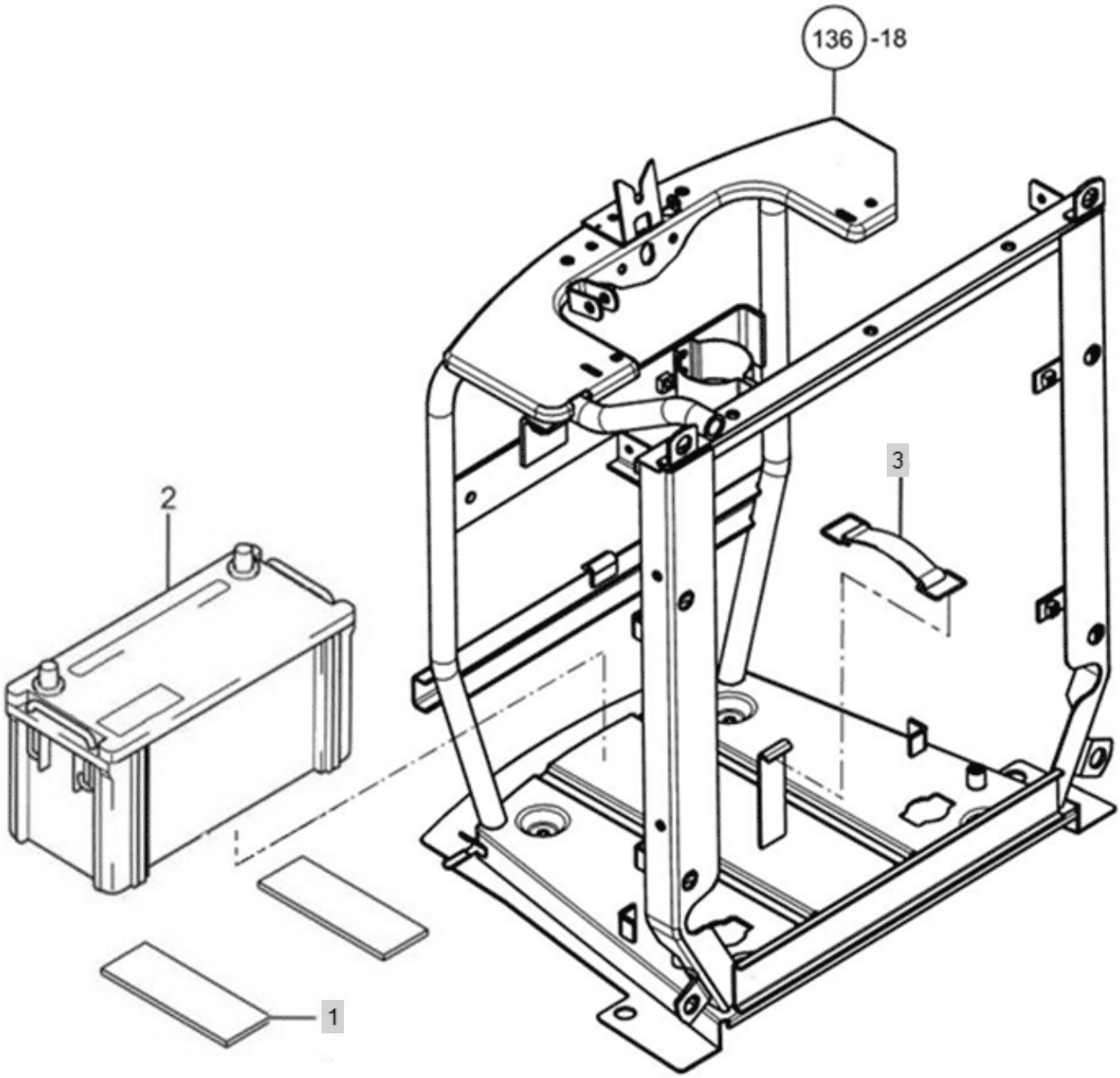

FIG S124 BRANSON 6530C	BATTERY	Year/Month 2020/02

KeyNo.	Part Number	Part Name	Quantity	Other
1	TTC4010000A4	TANKRUBBER,DUSTPROOF	2	
3	TZD6890000A4	BAND,AIRCLEANERHOLDING	1	

FIG S125 BRANSON 6530C	SWITCH	Year/Month 2020/02

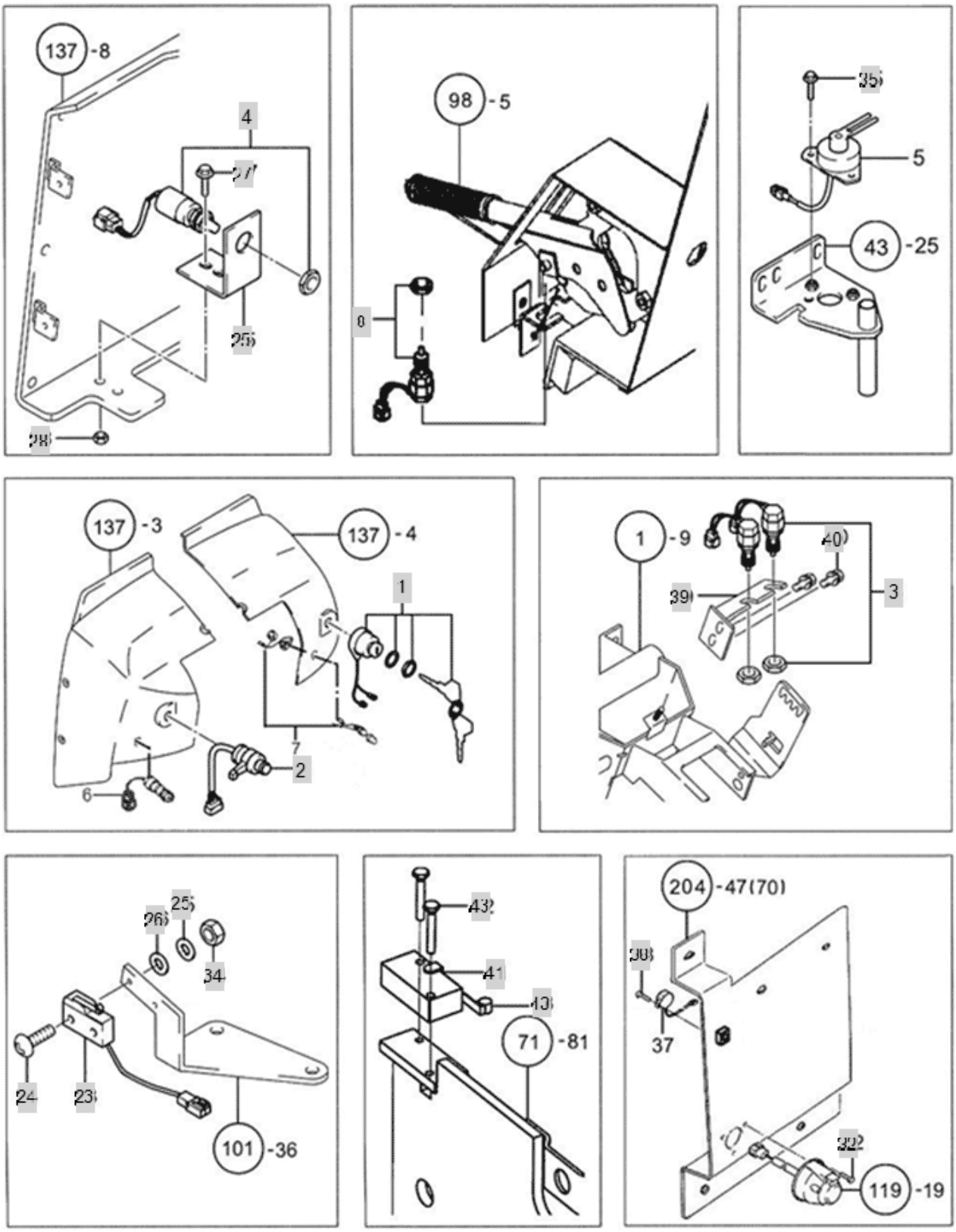

FIG S125 BRANSON 6530C	SWITCH	Year/Month 2020/02

KeyNo.	Part Number	Part Name	Quantity	Other
1	TTC5030000B3	STARTERSWITCHASS'Y	1	
2	CBF3010000A2	COMBINATION S/W	1	
3	TZC5110000A3	STOPLAMPSWITCH	2	
4	FTC5140000A3	SAFETYSWITCH	1	
5A	FTC5050000A2	스위치(FR)	1	
5B	TCD9110000B2	SWITCH ASS'Y	1	
8	TZC5110000A3	STOPLAMPSWITCH	1	
23	FTC5110000A3	SWITCH, PTO CONNECT	1	
24	26557-040302	+SCREW	2	
25	22217-040000	WASHER, SPRING (Φ 04)	2	
26	22137-040000	WASHER, PLAIN (Φ 04)	2	
27	26106-080162	SCREW,HEXFLANGEHEADCAP	2	
28	26366-080002	Nut, Hexa (Φ8)	2	
29	FTC5250000A4	BRACKET, SWITCH	1	
32	26557-060352	SCREW,+GROOVE	3	
34	26716-040002	HEXNUT	2	
35	26106-060122	HEX BOLT (6-12)	2	
37A	FTC5370000A3	BACK BUZZER	1	
37B	CEG9020000B3	BUZZER,BACK	1	
38	26023-050252	Screw, (5-25)	1	
39	FTC5390000A3	SWITCH BRACKRT(BREAK)	1	
40	26013-080182	SCREW,CAPTIVEWASHERCAP	2	
41	CQG8030000A3	SEALSWITCH	1	
42	26023-030162	Screw, (3-16)	2	
43	CEG8280000B4	Lever, NV Roller	1	

FIG S131 BRANSON 6530C	HORN	Year/Month 2020/02

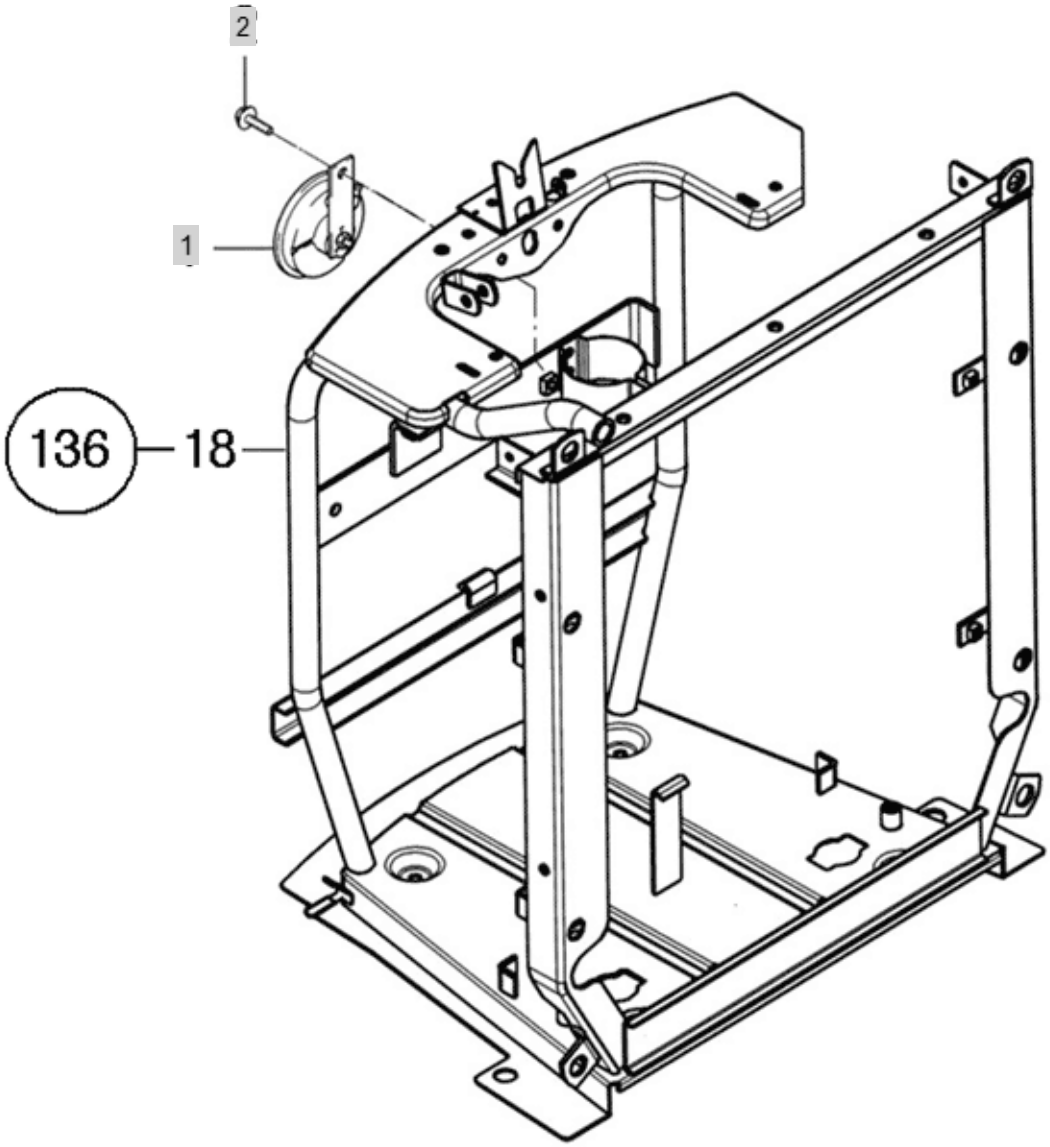

FIG S131 BRANSON 6530C	HORN	Year/Month 2020/02

KeyNo.	Part Number	Part Name	Quantity	Other
1	TTD1040000B3	HORN	1	
2	26106-060122	HEX BOLT (6-12)	1	

FIG S132 BRANSON 6530C	LAMP	Year/Month 2020/02

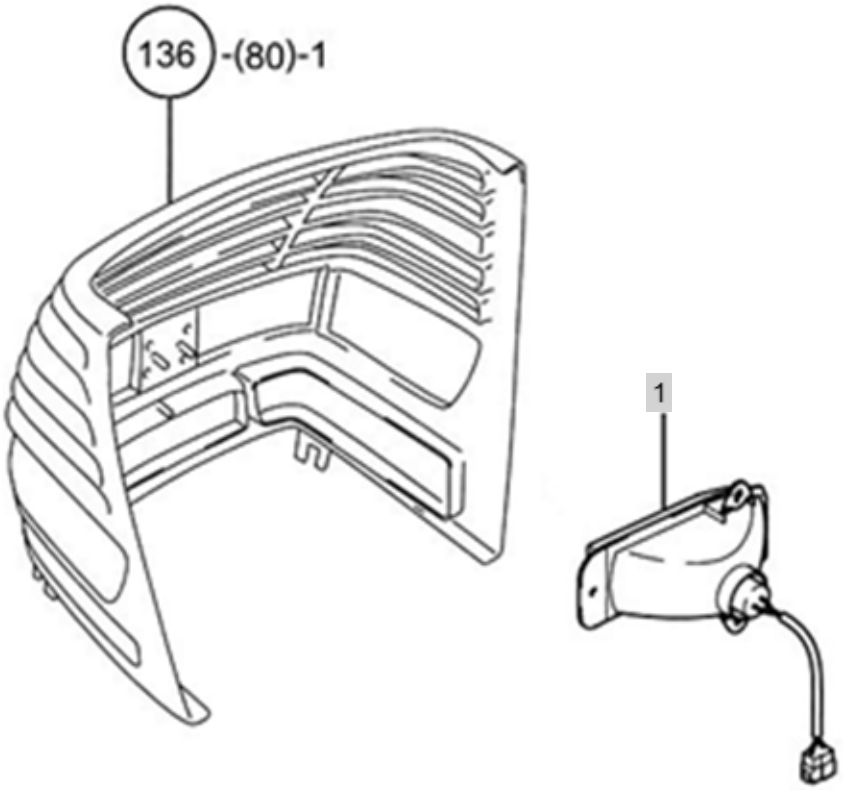

FIG S132 BRANSON 6530C	LAMP	Year/Month 2020/02

KeyNo.	Part Number	Part Name	Quantity	Other
1	NTD201E000A3	HEADLIGHT,RH,NEWSTYLE	2	

FIG S134 BRANSON 6530C	METER ASSEMBLY	Year/Month 2020/02

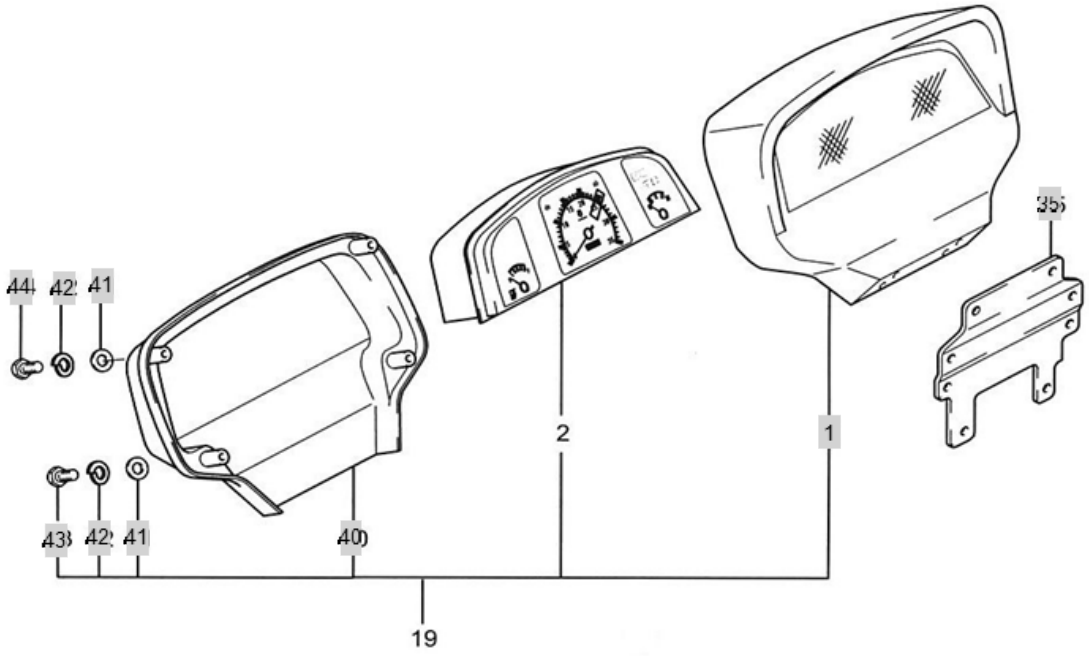

FIG S134 BRANSON 6530C	METER ASSEMBLY	Year/Month 2020/02

KeyNo.	Part Number	Part Name	Quantity	Other
1	FBD4190100A2	METER BODY[F]	1	
19A	FBD4190000B2	METER ASS'Y	1	
19B	FBD4190000A2	METER ASS'Y	1	
35	FTD4350000A3	BRACKET(METERS)	1	
41	22137-060000	WASHER , PLAIN	4	
42	22217-060000	WASHER, SPRING (Φ 06)	4	
43	26116-060162	BOLT	2	
44	26557-060352	SCREW,+GROOVE	2	
40	FTD4400000A1	METER COVER (REAR)	1	

FIG S136-2 BRANSON 6530C	HOOD (6530)	Year/Month 2020/02

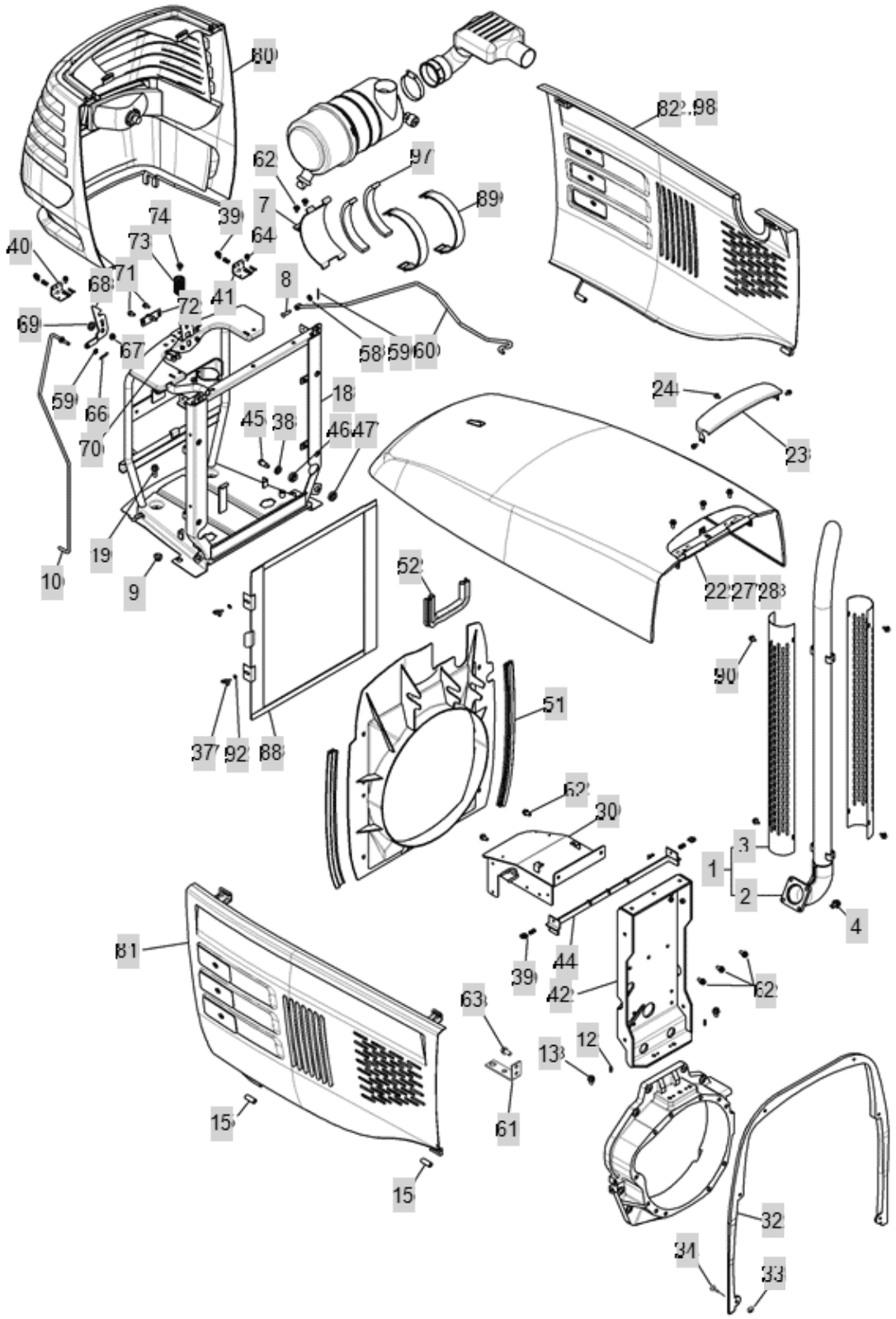

FIG S136-2 BRANSON 6530C	HOOD (6530)	Year/Month 2020/02

KeyNo.	Part Number	Part Name	Quantity	Other
1	FBD6010000B9	PIPE ASS'Y	1	
2	FBD6020000B2	EXHAUST PIPE (INNER)	1	
3	TA00016159A	EXHAUST COVER	1	
4	26106-080202	SQR FLANGE BOLT	4	
7	FBD6070000A2	AIR CLEANER BRACKET	1	
8	22487-080240	PIN, HEAD (08-24)	1	
9	TCE7100000A4	GUIDE	1	
10	FBD6100000A2	bonnet rod	1	
12	22351-060016	PIN, SPRING (6-16)	2	
13	26106-100142	Bolt, Hexa (10-14)	2	
15	TC53130000A4	CUSHION, RUBBER	4	
18	FBD6180000B0	GRILL FRAME ASS'Y	1	
19	26106-080352	SCREW,HEXFLANGEHEADCAP	4	
22	FTD6220000C0	BONNET ASS'Y	1	
23	TCE7180100A3	COVER	1	
24	26106-060122	HEX BOLT (6-12)	3	
27	FTD6270000A4	Bonnet urethane	1	
28	FTD6280000A4	INSULATOR,BONNET	1	
30	TA00017025A	BRACKET, FUSE BOX	1	
32	FBD6320000A1	COVER, STAY	1	
33	TCE9150000A4	SPEEDNUTM6	6	
34	TT02060000A4	(+)ROUNDED SCREW	6	
37	26645-060122	BOLT	2	
38	22137-120000	WASHER, PLAIN (Φ 12)	4	
39	TC53110000A4	CAMLOCK	6	
40	TCE7D70000A4	HANGER L	1	
41	TCE7D80000A4	HANGER R	1	
42	TA00016820A	ASS'Y, BONNET HINGE	1	
44	TA00016670A	BRACKET, SIDE COVER	1	
45	TT06050000A4	BOLT	4	
46	TT29150000A4	RUBBERA	4	
47	TT29160000A4	RUBBERB	4	
51	FTD6510000B3	SHROUD STRIP	2	
52	TCE7420000A4	STRIP	1	
58	22417-200300	PIN , COTTER (2-30)	1	
59	22137-080000	WASHER, PLAIN (Φ 08)	2	
60	FBD6600000A0	STAND, BONNET	1	
61	FBD6610000A4	BRACKET, HOSE	1	
62	26106-080162	SCREW,HEXFLANGEHEADCAP	10	
63	26106-100202	HEX BOLT, (10-20)	2	
64	26106-060122	HEX BOLT (6-12)	2	
66	22372-080000	PIN , SNAP (08Φ)	1	
67	26367-080002	HEX FLANGE NUT (Φ8)	1	
68	TCE7200000A4	BONNETLEVER	1	
69	22137-120000	WASHER, PLAIN (Φ 12)	1	

FIG S136-2 BRANSON 6530C	HOOD (6530)	Year/Month 2020/02

KeyNo.	Part Number	Part Name	Quantity	Other
70	TCE7460000A4	SPRING	1	
71	26106-060162	HEXFLANGEBOLT	2	
72	TCE7480000A4	PIN(FIXING BONNET)	1	
73	TCE7290000A4	SPRING(BONNET)	1	
74	26015-060162	BOLT	1	
80	FBD6800000A0	FRONT MASK ASS'Y	1	
81	FBD6810000A0	SIDE COVER ASS'Y (L)	1	
82	FBD6820000A0	SIDE COVER ASS'Y (R)	1	
88	HLT1261000B2		1	
89	TZD6890000A4	BAND,AIRCLEANERHOLDING	2	
90	26016-060162	BOLT , HEX /SP	4	
92	22217-060000	WASHER, SPRING (Φ 06)	2	
97	FTD6970000A4	AIR CLEAN PAD	2	
98	FTD6830000A4	SEAL(SIDE COVER)	2	

FIG S137 BRANSON 6530C	DASH BOARD	Year/Month 2020/02

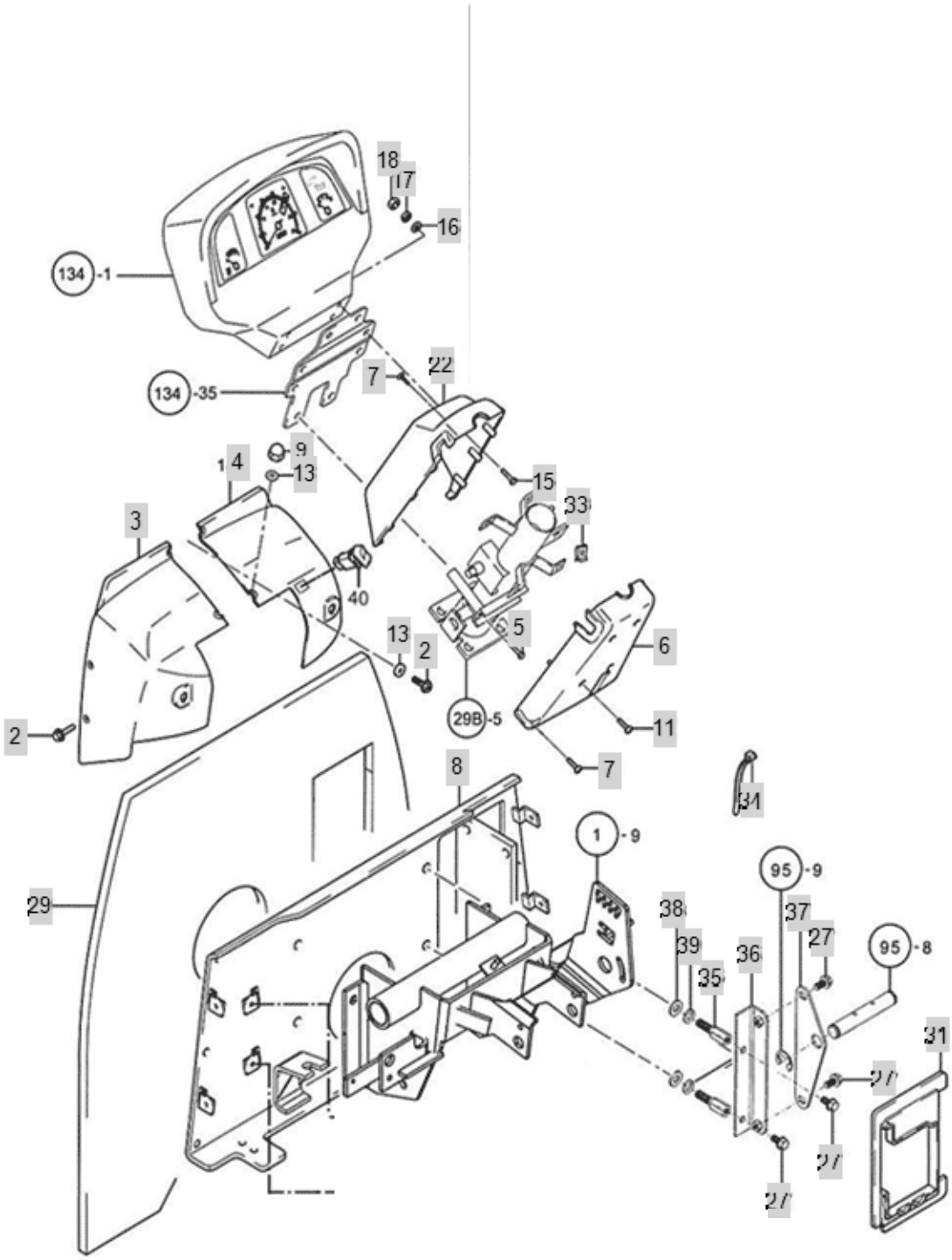

FIG S137 BRANSON 6530C	DASH BOARD	Year/Month 2020/02

KeyNo.	Part Number	Part Name	Quantity	Other
2	TCE9020000A4	BOLT(BC)	5	
3	FTD7030000A0	DASH BOARD (LH)	1	
4	FTD7040000A0	DASH BOARD (RH)	1	
5	26116-080952	HEX BOLT	2	
6	TCE9060000A1	COLUMN COVER R	1	
7	TTD7100000A4	CROSSRCESSEDTAPPINGSCREW	6	
8	FBD7080000B0	STAY,METER	1	
9	26657-060002	CAPNUT	1	
11	TTD7090000A4	CROSSRECESSEDHEADTAPPINGSCREW	2	
13	TCE9130000A4	WASHER	2	
15	26116-060252	HEXAGONBOLT	4	
16	22217-060000	WASHER, SPRING (Φ 06)	4	
17	22137-060000	WASHER , PLAIN	4	
18	26367-060002	Nut, Hexa (Φ6)	4	
22	FTD7220000A1	COVER(FRONT),COLUMN	1	
27	26106-080162	SCREW,HEXFLANGEHEADCAP	4	
29	FBD7290000A2	RADIATING PLATE	1	
31	FTD7310000A2	COVER(BRAKE VALVE)	1	
33	TTD7110000A4	SPEEDNUTNS5008	6	
34	TTB9420000A4	Band, Wire (250mm)	1	
35	FTD7350000A4	CONNECTING BOLT	2	
36	FTD7360000B3	B/V BRACKET-DOWN	1	
37	FTD7370000A4	HOLDER(B/V)	1	
38	22137-100000	WASHER, PLAIN (Φ 10)	2	
39	22217-100000	WASHER, SPRING (Φ 10)	2	

FIG S140 BRANSON 6530C	SEAT	Year/Month 2020/02

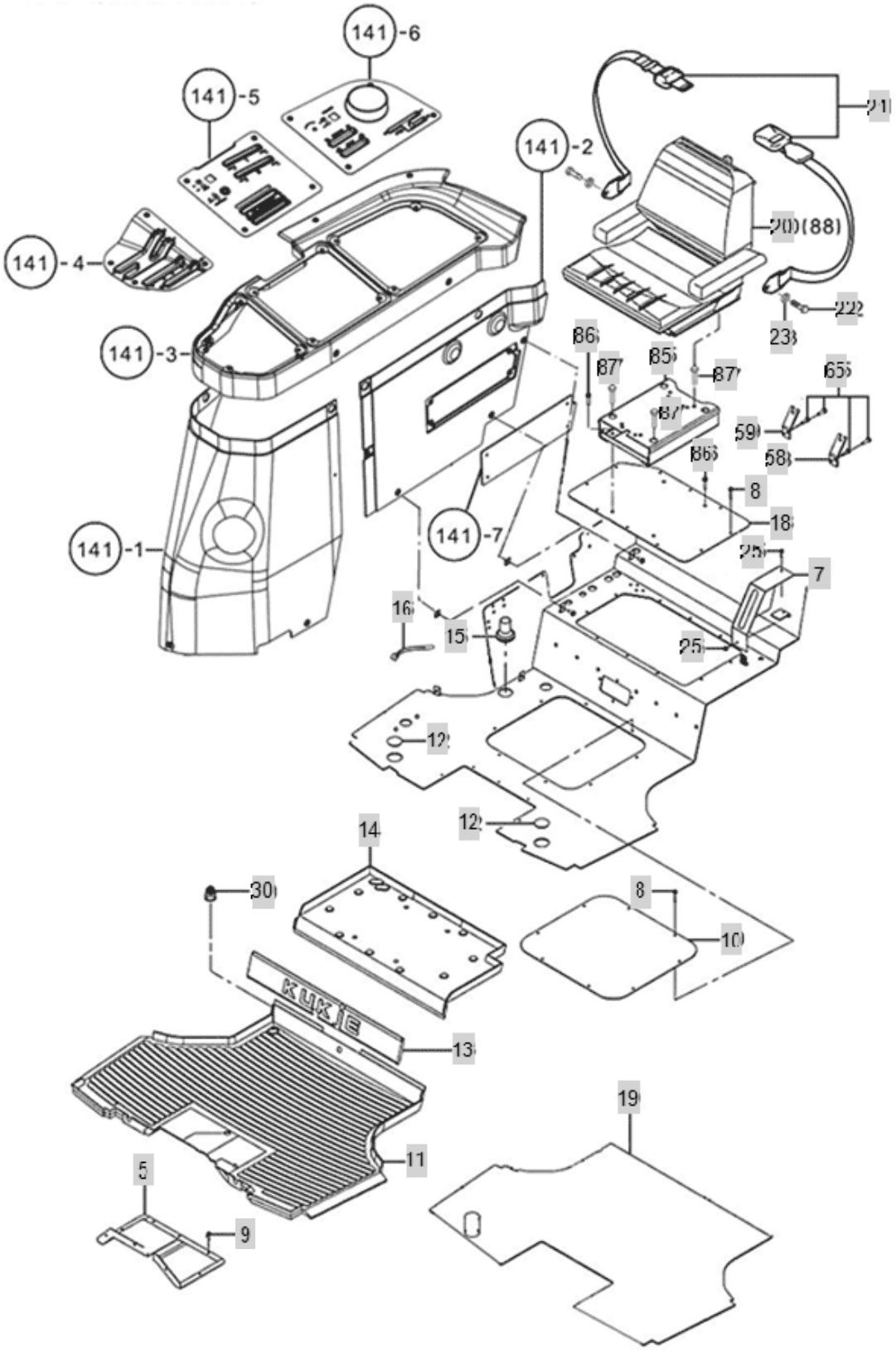

FIG S140 BRANSON 6530C	SEAT	Year/Month 2020/02

KeyNo.	Part Number	Part Name	Quantity	Other
5	FBE0050000A2	FOOTPALTE COVER	1	
7	FBE0070000C2	PARKING BRAKE COVER	1	
8	26106-080162	SCREW,HEXFLANGEHEADCAP	18	
9	26106-060162	HEXFLANGEBOLT	8	
10	FBE0100000A3	DUST COVER	1	
11	FBE0110000B0	RUBBER,FOOT PLATE	1	
12	FTE0120000A4	\	2	
13	FBE0130000A3	RUBBER, FOOT PLATE(MID)	1	
14	FBE0120000A0	RUBBER, FOOT PLATE(REAR)	1	
15	THB4912000A4	GROMMET 50	1	
16	CEH3370000A4	NYLON BAND 350	1	
18	FBE0180000B2	COVER, SEAT UNDER FLOOR	1	
19	FBE0190000A0	FOOTSTOOL RUBBER COVER	1	
20	FBE0200000A2	SEAT ASSY(5805 CABIN)	1	
21	TTE0230000B3	SEAT SAFETY BELT	1	
22	THA3504000A4	BOLT	2	
23	22217-100000	WASHER, SPRING (Φ 10)	2	
25	TCE9010000A4	BOLT	2	
30	FTE0300000A4	B0OTS	1	
58	FBE0580000A4	D CABLE BRACKET	1	
59	FBE0590000A4	P CABLE BRACKET	1	
65	26106-080162	SCREW,HEXFLANGEHEADCAP	4	
85	FBE0850000A2	SEAT GUY ASSY	1	
86	26106-100202	HEX BOLT, (10-20)	4	
87	THB3501000A4	HEX BOLT	4	

FIG S141 BRANSON 6530C	LEVER COVER	Year/Month 2020/02

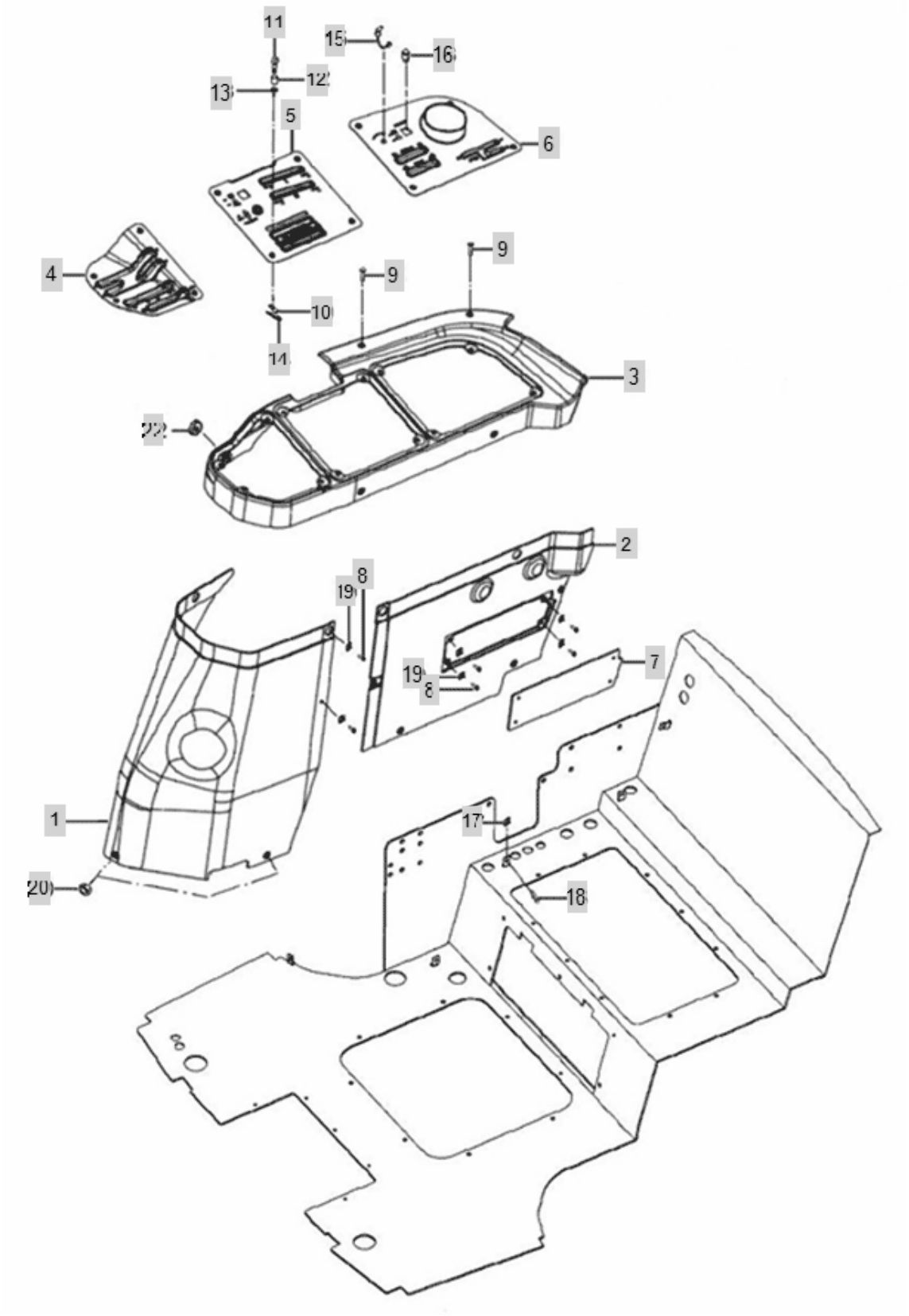

FIG S141 BRANSON 6530C	LEVER COVER	Year/Month 2020/02

KeyNo.	Part Number	Part Name	Quantity	Other
1	FBE1010000C1	Cover(F)	1	
2	FBE1020000B1	Cover(R)	1	
3	FBE1030000B1	Lever Cover Support Cover	1	
4	FBE1040000B2	LEVER COVER (F)	1	
5	FBE1050000B2	LEVER COVER(M)	1	
6	FBE1060000C1	LEVERCOVER(R)	1	
7	FBE1070000B3	CABLE ADJUSTMENT COVER	1	
8	TTD7090000A4	CROSSRECESSEDHEADTAPPINGSCREW	6	
9	26106-080252	SCREW,HEXFLANGEHEADCAP	2	
10	FTE0720000A4	STOPPER	1	
11	TCC7070000A4	BOLT 8*30	1	
12	TCC7010000A4	SPACER	1	
13	22157-080000	WASHER, PLAIN (Φ 08)	1	
14	22417-200200	PIN , COTTER (2-20)	1	
15	FTC5180000A3	Switch, PTO Selection	1	
16	NTC5410000A4	switch, PTO	1	
17	TCE9150000A4	SPEEDNUTM6	17	
18	TT02060000A4	(+)ROUNDED SCREW	17	
19	TTD7110000A4	SPEEDNUTNS5008	6	
20	26366-060002	Nut, Hexa (Φ6)	2	
22	22137-060000	WASHER , PLAIN	1	

FIG S144-1 BRANSON 6530C	NAME PLATE A	Year/Month 2020/02

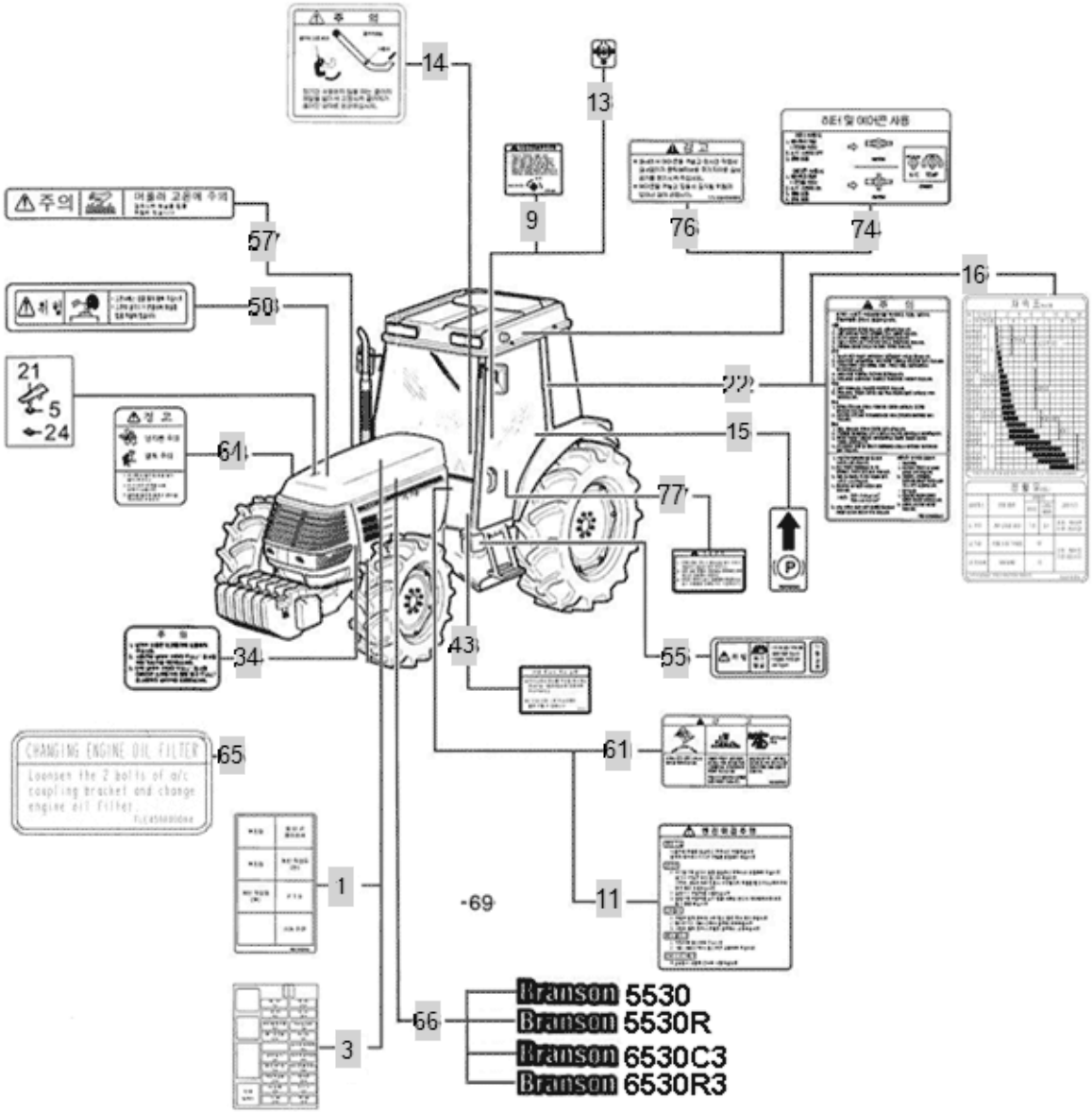

FIG S144-1 BRANSON 6530C	NAME PLATE A	Year/Month 2020/02

KeyNo.	Part Number	Part Name	Quantity	Other
1	FBE4710000B4	Relay Box Nameplate	1	
3	FLE4440000A4	FUSEBOX NAMEPLATE	1	
5	TTD6440000A4	CUSHION, RUBBER	2	
9	FBE4090000A4	NAME PLATE, HYDRAULIC STOP	1	
11	FBE4110000A3	Engine Treatment Name Plate	1	
13	TTE4130000A4	NAMEPLATE,DIFF	1	
14	NTE4130000B4	NAME PLATE	1	
15	TZE4150000A4	LABEL, PAKING BRAKE	1	
16	TA00018953A	NAME PLATE, SPEED(OIL)	1	
21	TCF8100000A4	TOPMARK	1	
22	FBE4200000A3	Treatment Caution Nameplate	1	
24	TB41290000A4	NUT	2	
34	FBE4340000A4	Support Tank Nameplate	1	
43	FBE4430000A4	NAME PLATE(COUTION)	1	
55	TZE4190000C4	LABEL, FUEL CAUTION	1	
57	FBE4570000A4	NAME PLATE, COUTION H	1	
58	FBE4580000A4	NAME PLATE, DANGER	1	
61	FBE4610000A3	Caution Nameplate L	1	
64	TZE5180000C4	NAME PLATE, REVOLUTION	1	
65	FLE4590000A4	CHANGING FILTER NAMEPLATE	1	
66	FBE4810000A1	NAME PLATE, BONNET(6530)	2	
74	FBE4740000A4	Air condenser Use Nameplate	1	
76	FBE4760000A4	Air condenser Caution Nameplate	1	
77	FBE4770000A4	NAME PLATE, COUTION	1	
78	HRC5056000B3	NAME PLATE, EPA	1	

FIG S144-2 BRANSON 6530C	NAME PLATE B	Year/Month 2020/02

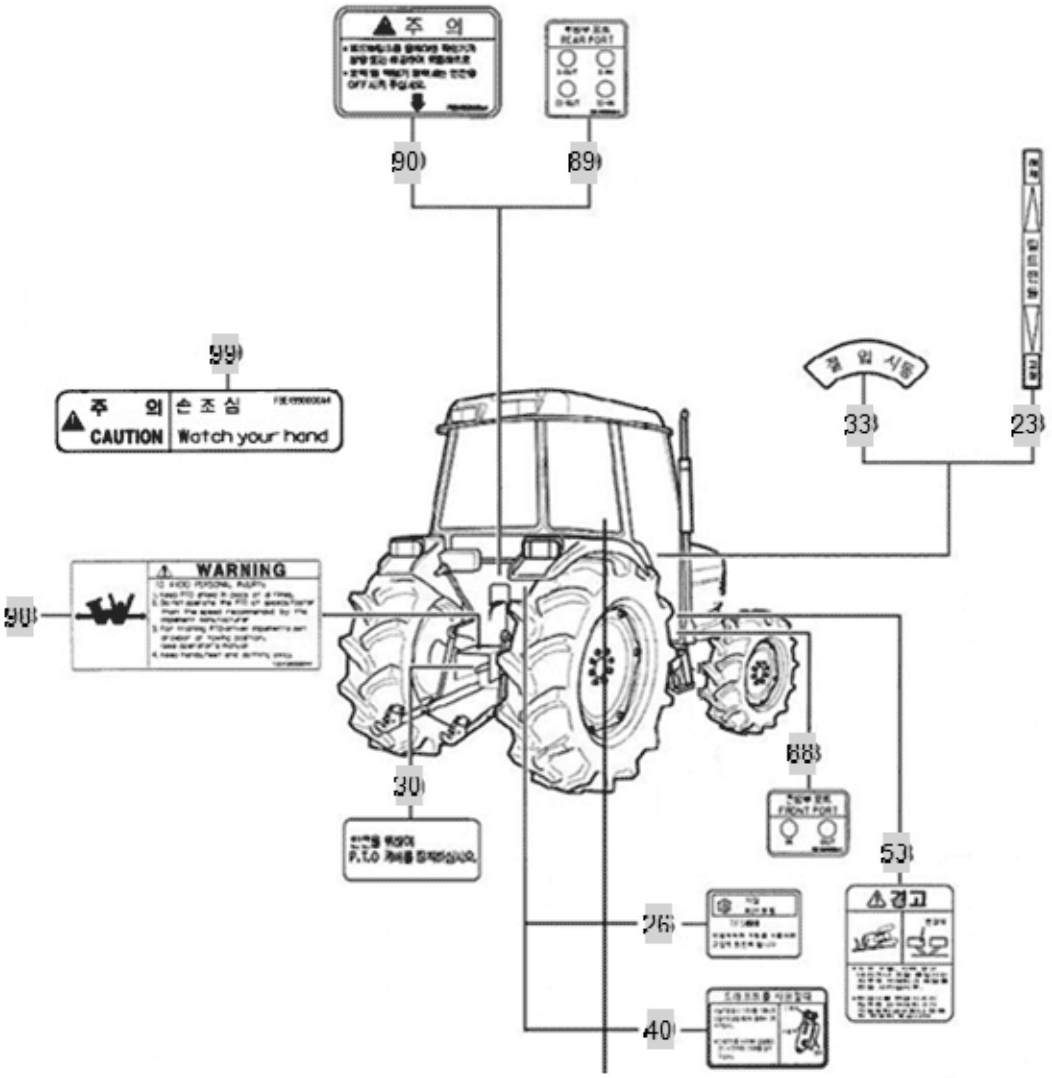

FIG S144-2 BRANSON 6530C	NAME PLATE B	Year/Month 2020/02

KeyNo.	Part Number	Part Name	Quantity	Other
23	FBE4230000A4	NAME PLATE, TILT HANDLE	1	
26	FBE4260000A4	NAME PLATE, OIL	1	
30	FBE4300000A4	PTO Safety Cover Nameplate	1	
33	FBE4330000A4	NAME PLATE(KEY SWITCH)	1	
40	TZE4400000A4	NAMEPLATE,DRAFT	1	
53	FBE4530000A4	NAME PLATE, WARNING	1	
88	FBE4880000A4	Front Port Nameplate	1	
89	FBE4890000A4	Rear Port Nameplate	1	
90	FBE4910000A4	Peedback Link Caution Nameplate	1	
94	NTE504E000A4	NAME PLATE, STARTING	1	
98	TZE4300000B4	NAME PLATE, PTO CAUTION	1	
99	FBE4990000A4	NAME PLATE, CAUTION	1	

FIG S144-3 BRANSON 6530C	NAME PLATE C	Year/Month 2020/02

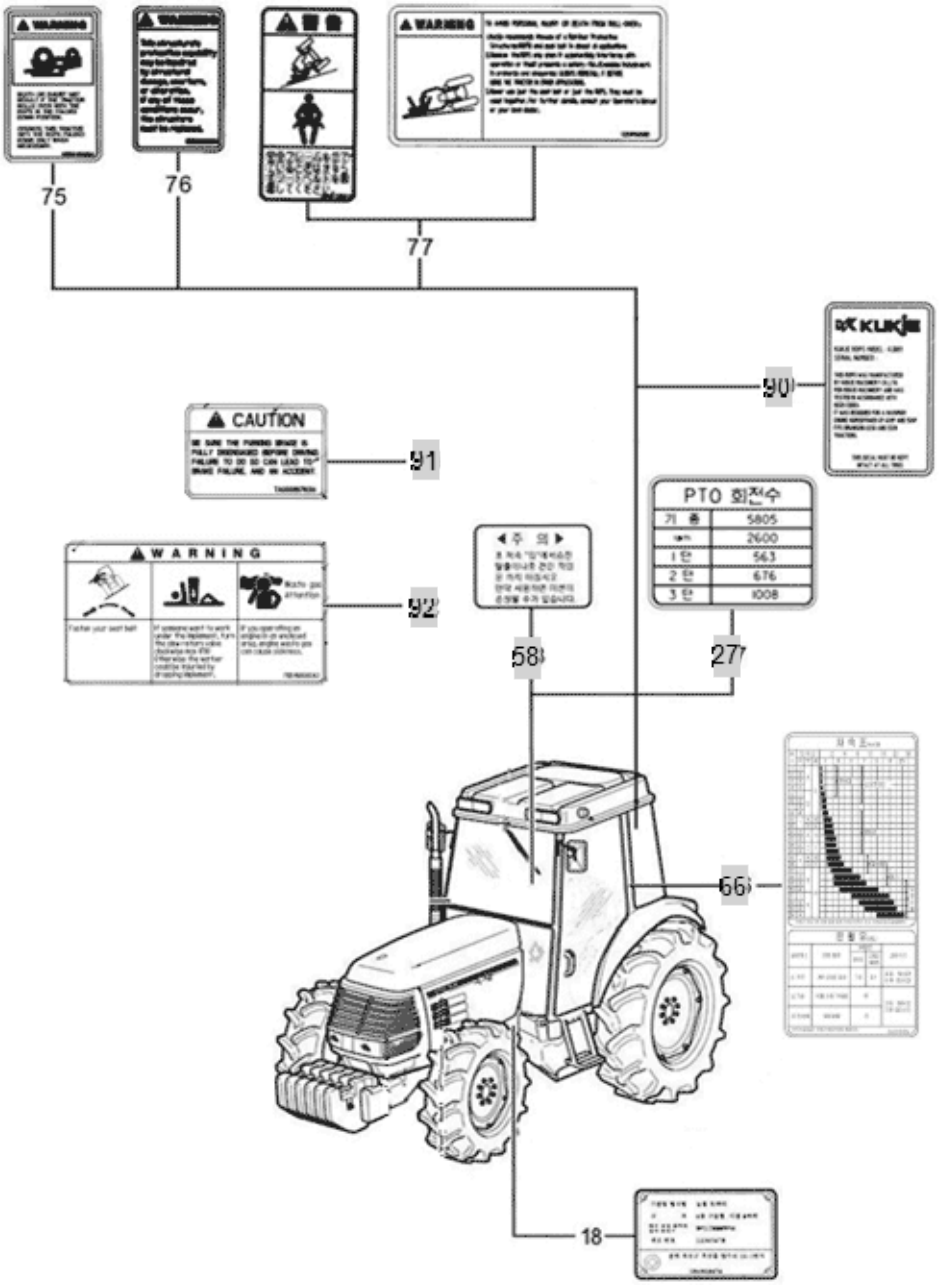

FIG S144-3 BRANSON 6530C	NAME PLATE C	Year/Month 2020/02

KeyNo.	Part Number	Part Name	Quantity	Other
27	FBE5270000B4	PTO Shift Nameplate	1	
58	FBE5580000A4	NAME PLATE, CREEP	1	
66	TA00018953A	NAME PLATE, SPEED(OIL)	1	
90	FBE6000000A4	ROPS NAME PLATE	1	
91	TA00016783A	NAME PLATE, CAUTION	1	
92	FBE6100000A4	DRAWBAR PLATE	1	

FIG S146 BRANSON 6530C	TOP LINK	Year/Month 2020/02

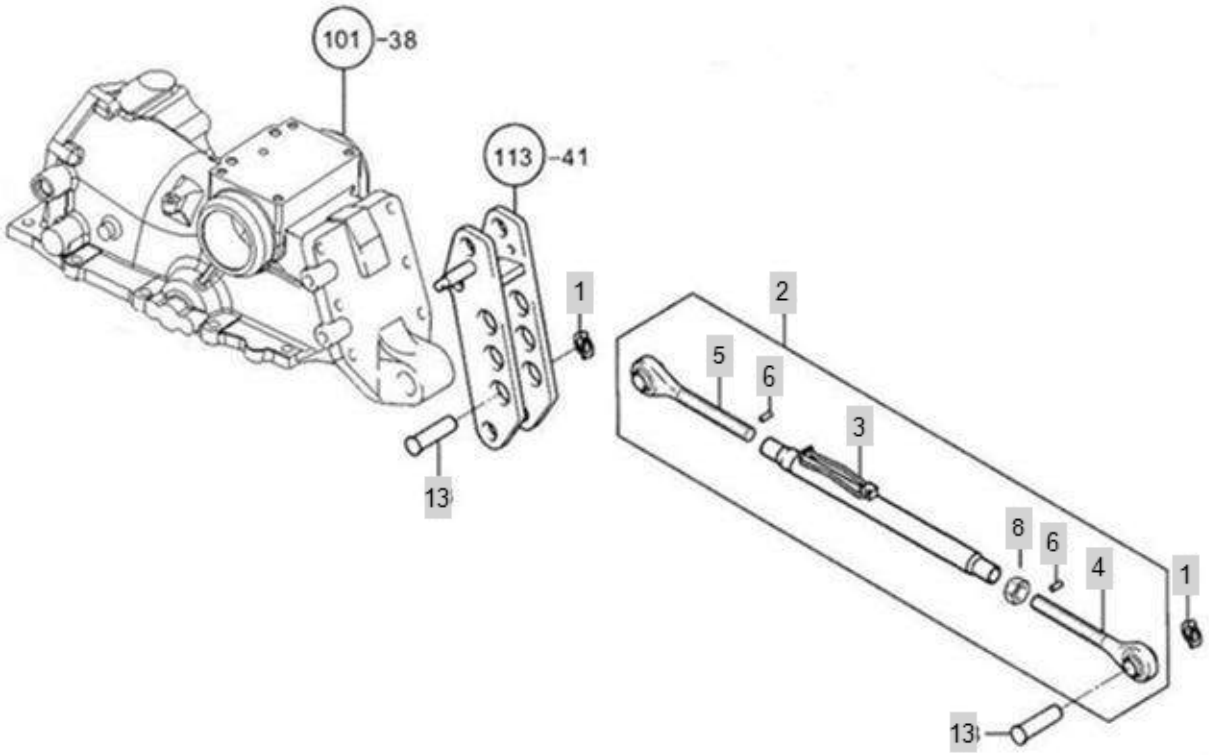

FIG S146 BRANSON 6530C	TOP LINK	Year/Month 2020/02

KeyNo.	Part Number	Part Name	Quantity	Other
1	TJ30110000A4	RING PIN	2	
2	FTE6210000A2	TOP LINK ASSY (CAT II)	1	
3	FTE6200100A3	TURN BUCKLE	1	
4	FTE6040000A3		1	
5	FTE6050000A3		1	
6	22351-040018	PIN, SPRING (4-01)	2	
8	26716-240002	NUTM24	1	
13	FTE6130000B4	HEAD PIN	1	

FIG S147 BRANSON 6530C	LIFT LINK ASS'Y - L	Year/Month 2020/02

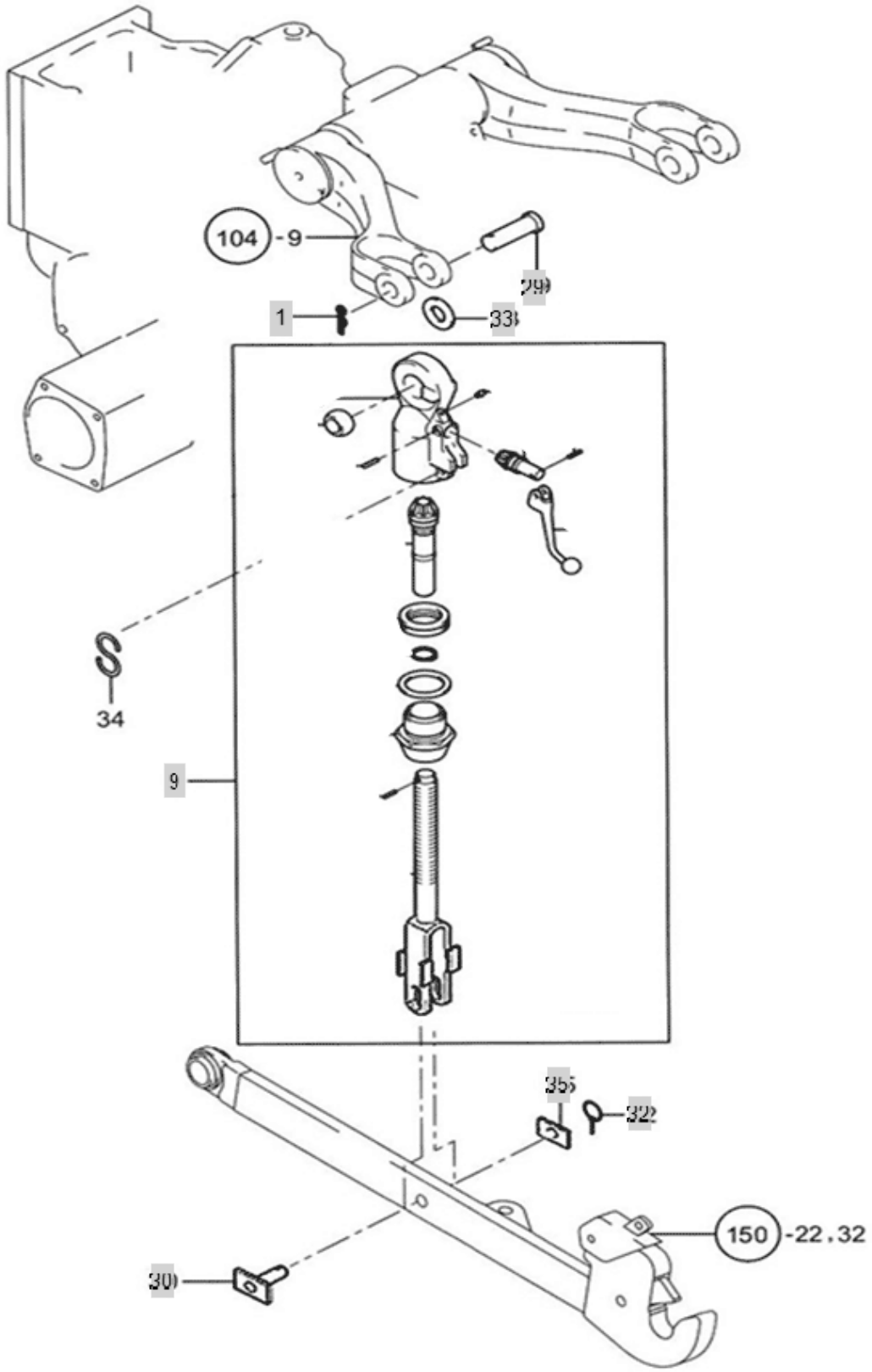

FIG S147 BRANSON 6530C	LIFT LINK ASS'Y - L	Year/Month 2020/02

KeyNo.	Part Number	Part Name	Quantity	Other
1	TTE7010000A4	SNAPPIN	1	
9	FTE7090000D1	LIFT LINK ASSY (RH)	1	
29	TTE7290000B4	PIN	1	
30	FTE7300000E4	LIFT YORK PIN	1	
32	TJ30110000A4	RING PIN	1	
33	FTE7330000A4	COLLAR	1	
35	FTE7300200B4	STOPPER	1	

FIG S148 BRANSON 6530C	LIFT LINK ASS'Y-R	Year/Month 2020/02

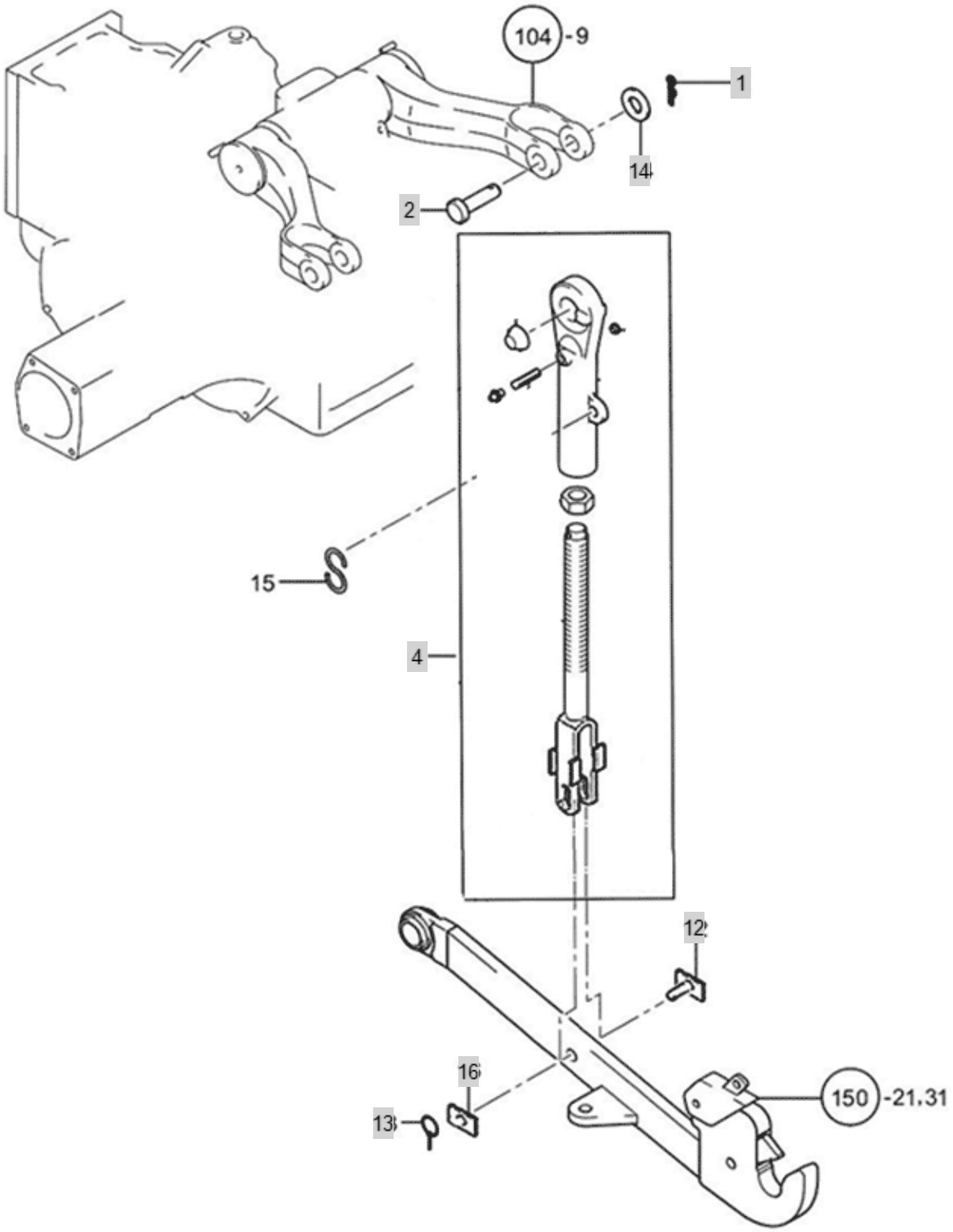

FIG S148 BRANSON 6530C	LIFT LINK ASS'Y-R	Year/Month 2020/02

KeyNo.	Part Number	Part Name	Quantity	Other
1	TTE7010000A4	SNAPPIN	1	
2	TTE7290000B4	PIN	1	
4	FTE8040000E1	Lift link assy-L	1	
12	FTE7300000E4	LIFT YORK PIN	1	
13	TJ30110000A4	RING PIN	1	
14	FTE7330000A4	COLLAR	1	
16	FTE7300200B4	STOPPER	1	
20	26716-270002	HEX NUT	1	

FIG S150 BRANSON 6530C	LOWER LINK	Year/Month 2020/02

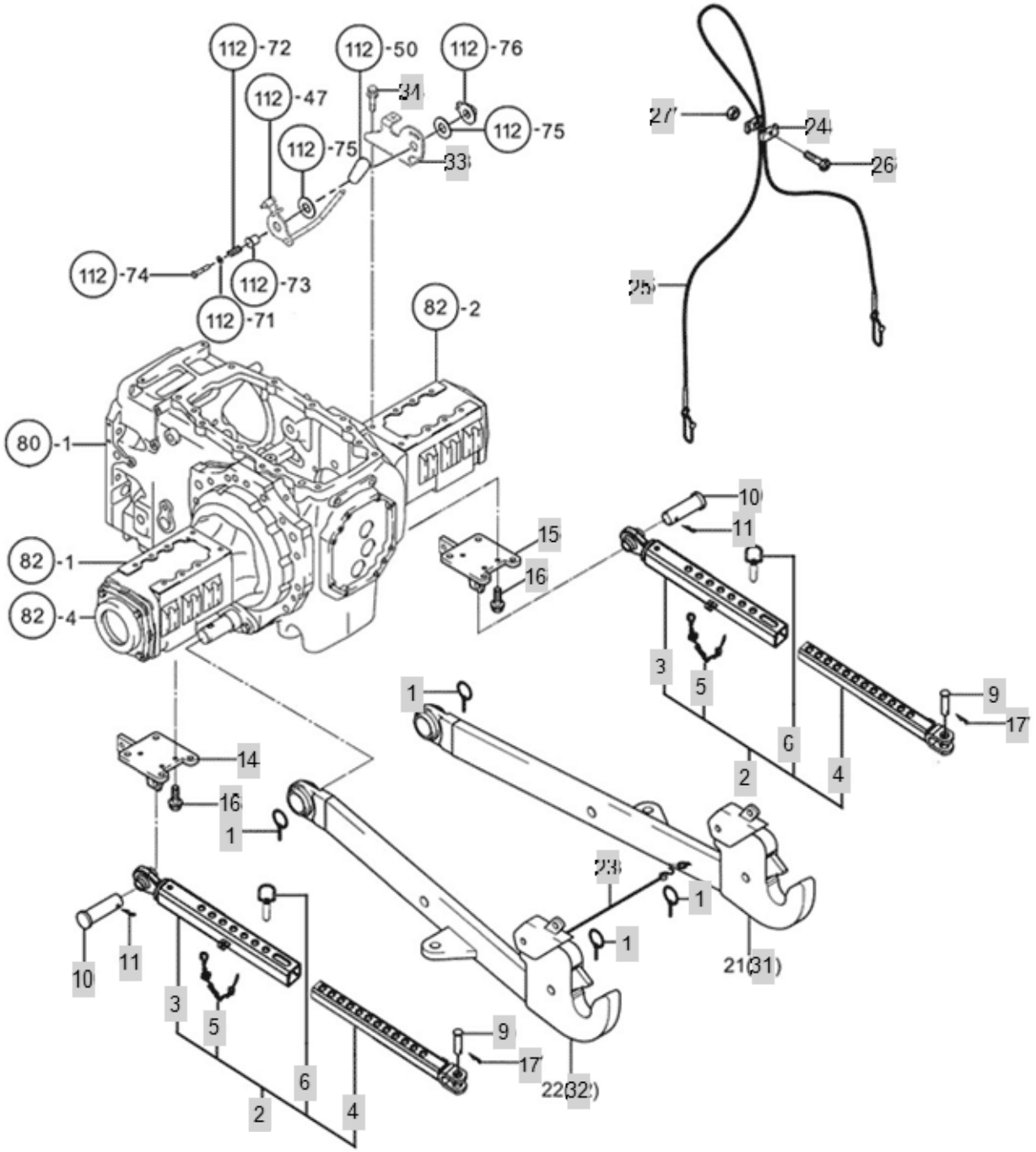

FIG S150 BRANSON 6530C	LOWER LINK	Year/Month 2020/02

KeyNo.	Part Number	Part Name	Quantity	Other
1	TB440300INA4	RING PIN ASSY'	4	
2	FBF0020000A2	CHECK BAR	2	
3	FBF0030000A3	CHECK BAR FRONT	2	
4	FBF0040000A3	CHECK BAR R	2	
5	FBF0060000A4	CONNECT LINK	2	
6	FBF0050000A4	CONNECT PIN -> FBF0020000A2	2	
9	FTF0090000A4	PIN, CHECK CHAIN	2	
10	FTF0100000A4	FIXING PIN, CHECK CHAIN	2	
11	TTE7010000A4	SNAPPIN	2	
14	FBF0140000A1	CHECK CHAIN BRACKET L	1	
15	FBF0150000A1	CHECK CHAIN R ASS'Y	1	
16	26013-120402	Bolt, Hexa (12-40)	6	
17	22417-500320	PIN , COTTER (5-32)	2	
23	TH25190000A3	RUBBERASS'Y,LINKHOLDING	1	
24	TJ29280000A4	CLAMP	2	
25	TJ29290000A2	CABLE ASS`Y	1	
26	26557-060202	SCREW	1	
27	26717-060002	NUT	1	
31	FBF0310000A0	lower link set(right)	1	
32	FBF0320000A0	LOWER LINK SET(LEFT)	1	
33	FBF0330000A3	LEVER BRACKET	1	
34	26013-120252	SCREW,CAPTIVEWASHERCAP	2	

FIG S152-1 BRANSON 6530C	DRAWBAR HITCH (CURRENT VERSION)	Year/Month 2020/02

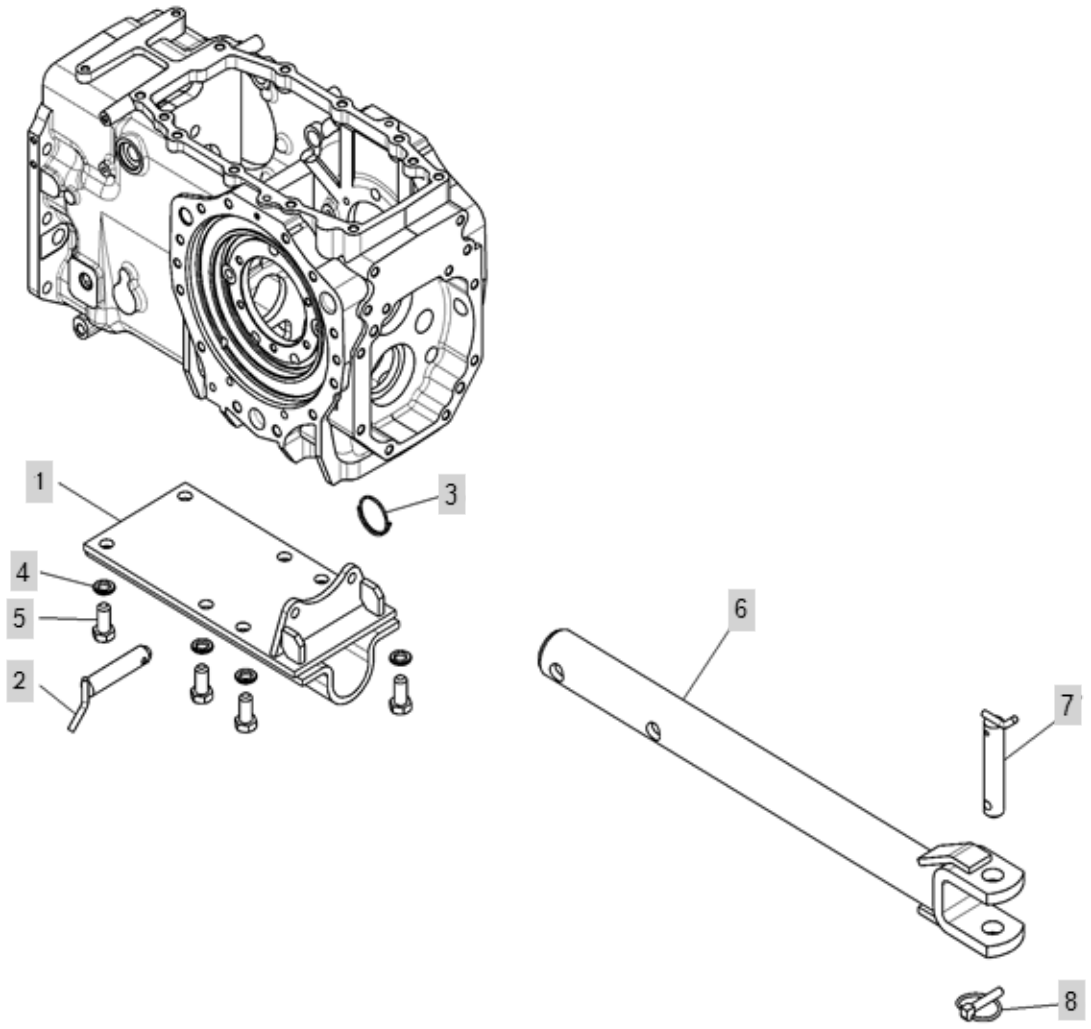

FIG S152-1 BRANSON 6530C	DRAWBAR HITCH (CURRENT VERSION)	Year/Month 2020/02

KeyNo.	Part Number	Part Name	Quantity	Other
1	TA00016916C	DRAW BAR HITCH BRACKET	1	
2	TB46060000A4	HITCHPIN22	1	
3	TB46070000A4	RING	1	
4	22217-160000	WASHER, SPRING (Φ 16)	6	
5	26116-160352	BOLT	6	
6	TA00022412A	DRAWBAR_BRANSON	1	
7	TTF2030000B4	HITCH PIN	1	
8	TB440300INA4	RING PIN ASSY'	1	

FIG S152-2 BRANSON 6530C	DRAWBAR HITCH (OLD VERSION)	Year/Month 2020/02

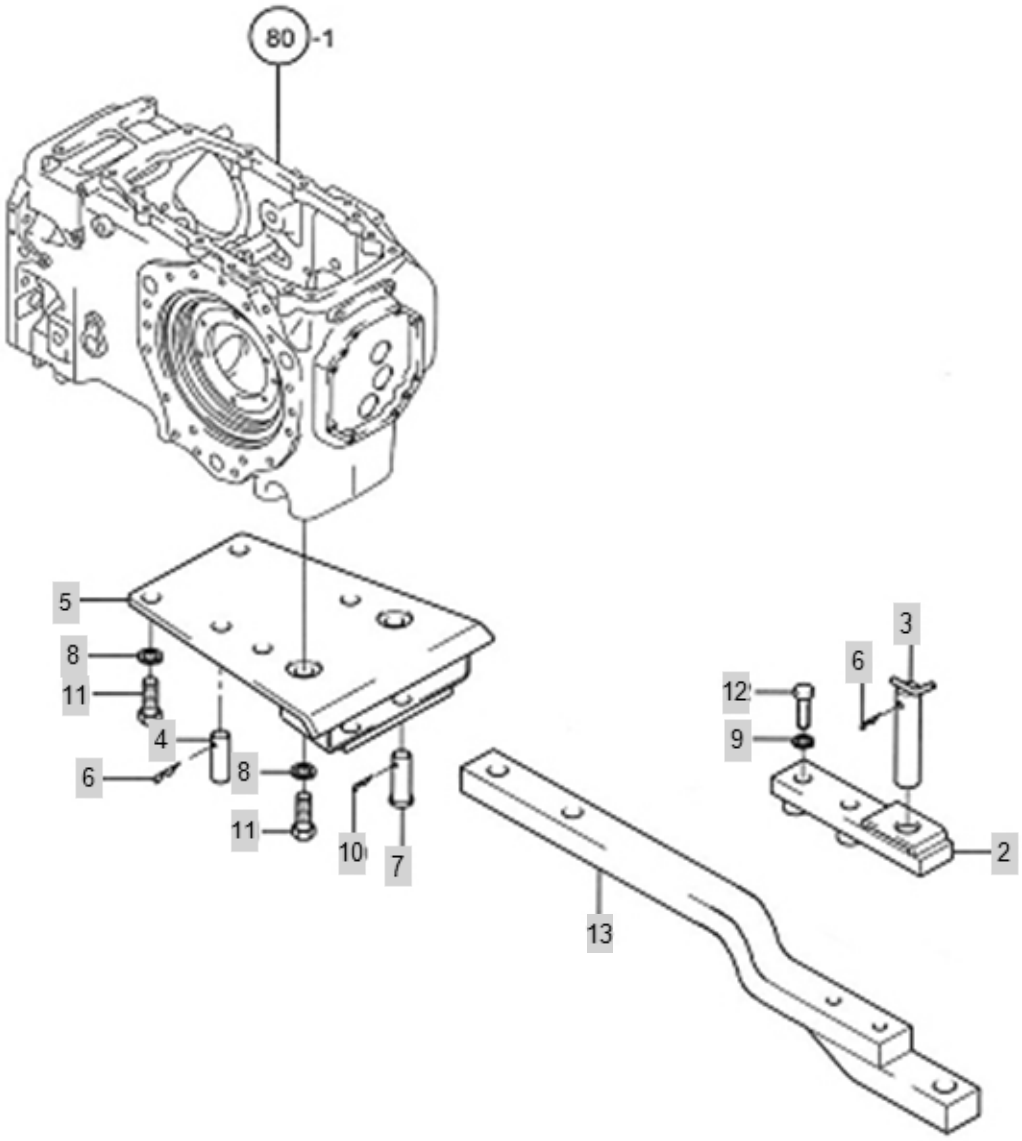

FIG S152-2 BRANSON 6530C	DRAWBAR HITCH (OLD VERSION)	Year/Month 2020/02

KeyNo.	Part Number	Part Name	Quantity	Other
2	TTF2020000A4	PLATE(DRAWBAR)	1	
3	TTF2030000B4	HITCH PIN	1	
4	TTF2040000A4	PIN	1	
5	TTF2050000A3	BRACKET, DRAWBAR	1	
6	TB46030000A4	SNAP PIN	2	
7	TTF2070000A4	PIN	1	
8	22217-160000	WASHER, SPRING (Φ 16)	6	
9	22217-160000	WASHER, SPRING (Φ 16)	2	
10	22360-190000	PIN , SNAP (9Φ)	1	
11	26116-160352	BOLT	6	
12	26116-160802	HEX BOLT	2	
13	FBF2010000A2	DRAW BAR HITCH	1	

FIG S160 BRANSON 6530C	BALANCE WEIGHT	Year/Month 2020/02

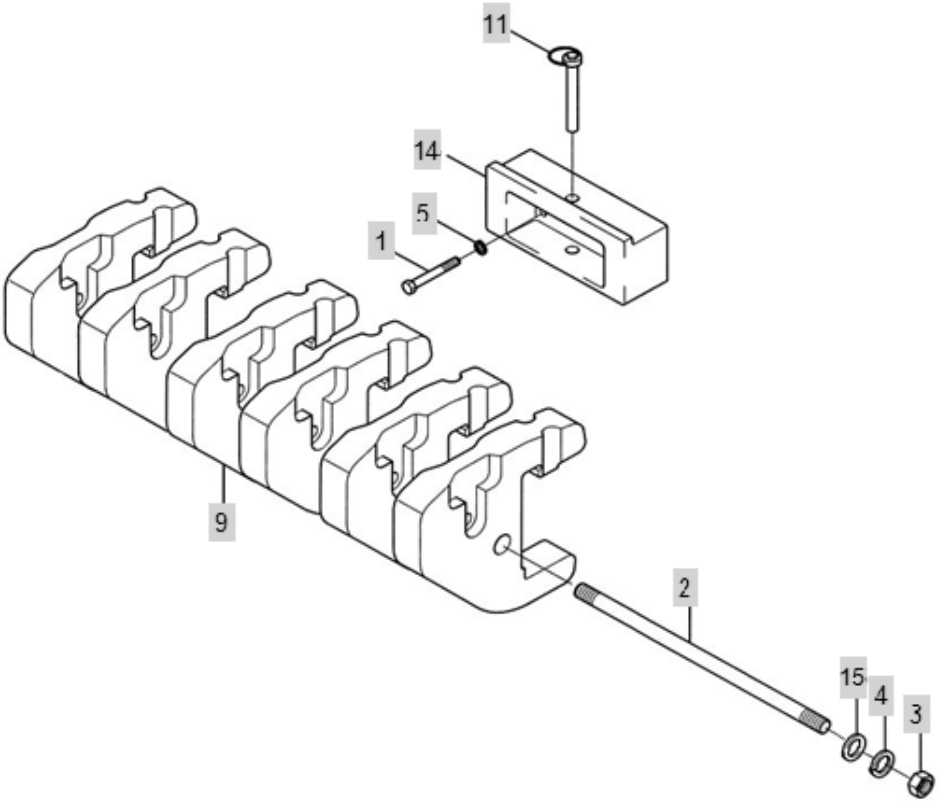

FIG S160 BRANSON 6530C	BALANCE WEIGHT	Year/Month 2020/02

KeyNo.	Part Number	Part Name	Quantity	Other
1	26116-160952	BOLT	4	
2	TTG0020000B4	LOCKBAR	1	
3	26716-160002	NUT	2	
4	22217-160000	WASHER, SPRING (Φ 16)	2	
5	22217-160000	WASHER, SPRING (Φ 16)	4	
9	TTG0090000A1	FRONT WEIGHT	6	
11	TTG0110000A4	LOCKING BAR, WEIGHT	1	
14	FTG0140000A1	BASE WEIGHT	1	
15	22127-160000	WASHER, SPLAIN (Φ 16)	2	

FIG S201-1 BRANSON 6530C	FRAME, CAB	Year/Month 2020/02

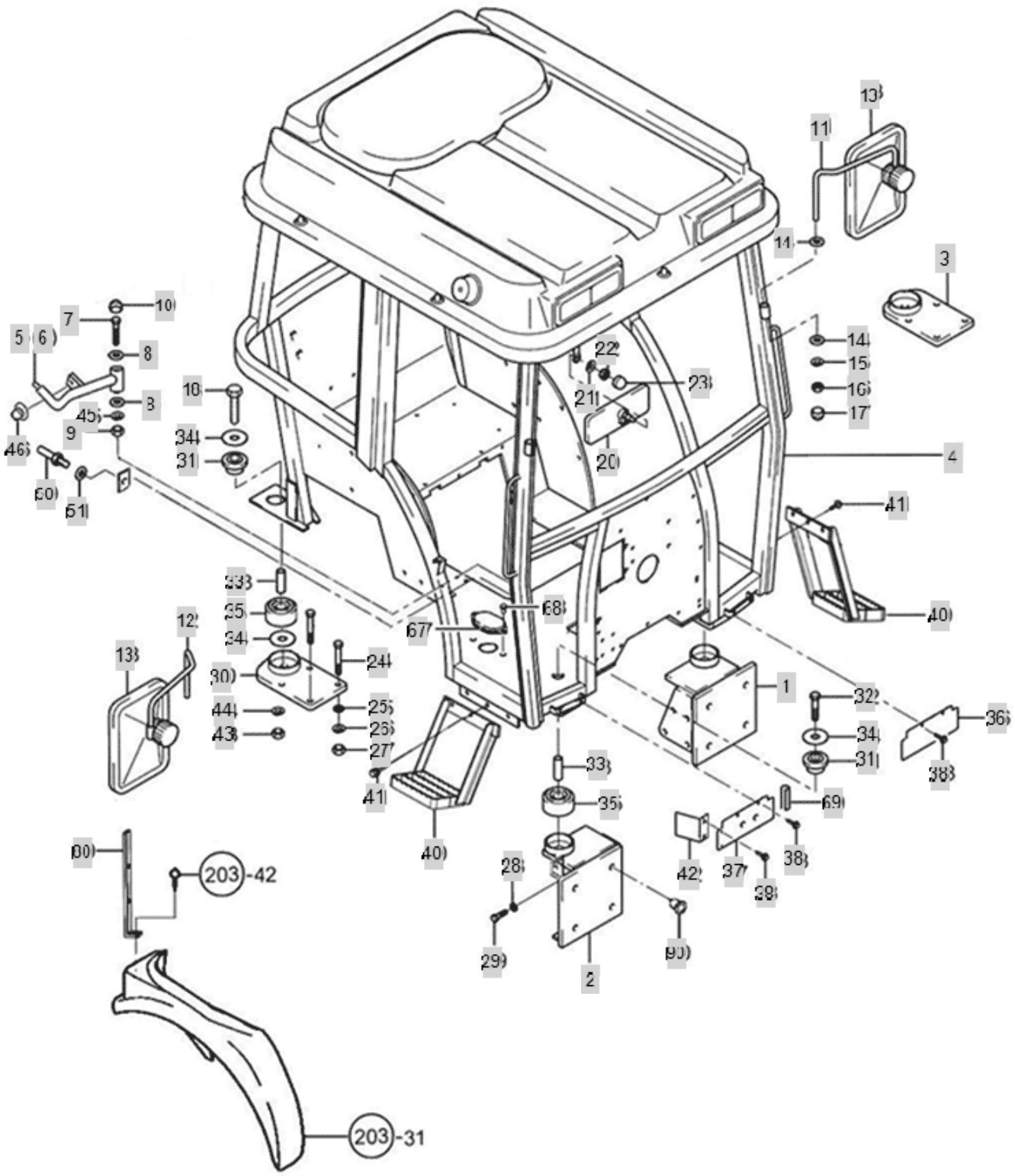

FIG S201-1 BRANSON 6530C	FRAME, CAB	Year/Month 2020/02

KeyNo.	Part Number	Part Name	Quantity	Other
1	FTK1010000A1	BRACKET, FRONT(L)	1	
2	FBK1020000A1	BRACKET.RH.FRONT	1	
3	FTK1030000A2	BRACKET,REAR(L)	1	
4	FBK1040000A0	FRAME, CABIN	1	
5	FBK1050000A3	LOCK ROD	1	
6	FBK1060000A3	LOCK ROD	1	
7	26116-080352	SCREW,HEXHEADCAP	2	
8	22137-080000	WASHER, PLAIN (Φ 08)	4	
9	26341-080002	U-NUT	2	
10	THA4912000A9	CAP NUT	2	
11	TCJ1022400A3	ARM(L), BACK-MIRROR	1	
12	TCJ1022500A3	ARM(R), BACK-MIRROR	1	
13	TTK7030000A9	SIDEMIRRORASS`Y	2	
14	22137-100000	WASHER, PLAIN (Φ 10)	4	
15	22217-100000	WASHER, SPRING (Φ 10)	2	
16	26716-100002	Nut, Hexa (Φ10)	2	
17	26657-100002	CAPNUT10	2	
18	TA00002746A	BOLT(M20X135)	2	
20	THA4400000A9	ROOM MIRROR	1	
21	22217-080000	WASHER, SPRING (Φ 08)	1	
22	26716-080002	NUT,HEX (D8)	1	
23	THA4912000A9	CAP NUT	1	
24	TTF8170000A4	BOLT	8	
25	22137-160000	WASHER, PLAIN (Φ 16)	8	
26	22217-160000	WASHER, SPRING (Φ 16)	8	
27	26716-160002	NUT	8	
28	22217-140000	WASHER, SPRING (Φ 14)	8	
29	26116-140402	BOLT	8	
30	FTK1300000A2	BRACKET, REAR(R)	1	
31	FTK1310000A4	CUSHION RUBBER(UPPER)	4	
32	FTK1320000A4	BOLT	2	
33	FTK1330000B4	COLLAR	4	
34	TH51050000A4	WASHER	6	
35	FTK1350000A4	RUBBER	4	
36	FBK1360000B3	BRACKET	1	
37	FBK1370000B3	BRACKET	1	
38	26106-080162	SCREW,HEXFLANGEHEADCAP	6	
40	FTK1400000A0	SUB STEP ASS'Y	2	
41	26013-120252	SCREW,CAPTIVEWASHERCAP	6	
42	FTK1420000B4	BRACKET COVER(CABIN)	1	
43	26716-200002	NUT	2	
44	22217-200000	WASHER, SPRING (Φ 20)	2	
45	22117-080000	WASHER, PLAIN (Φ 08)	2	
46	FBK1460000A4	RUBBER	2	
50	FBK1500000A3	PIN	2	

FIG S201-1 BRANSON 6530C	FRAME, CAB	Year/Month 2020/02

KeyNo.	Part Number	Part Name	Quantity	Other
51	22157-080000	WASHER, PLAIN (Φ 08)	2	
52	FBK1520000A4	NUT	2	
67	TCF4140000A4	COVER	1	
68	TC90050000A3	RIVET	2	
69	TCE7520000A4	GUIDE	1	
75	26106-080162	SCREW,HEXFLANGEHEADCAP	6	
80	FBK1800000A3	SMV BRACKET	1	
90	FB08090000A4	PLUG	8	

FIG S202 BRANSON 6530C	DOOR, CAB	Year/Month 2020/02

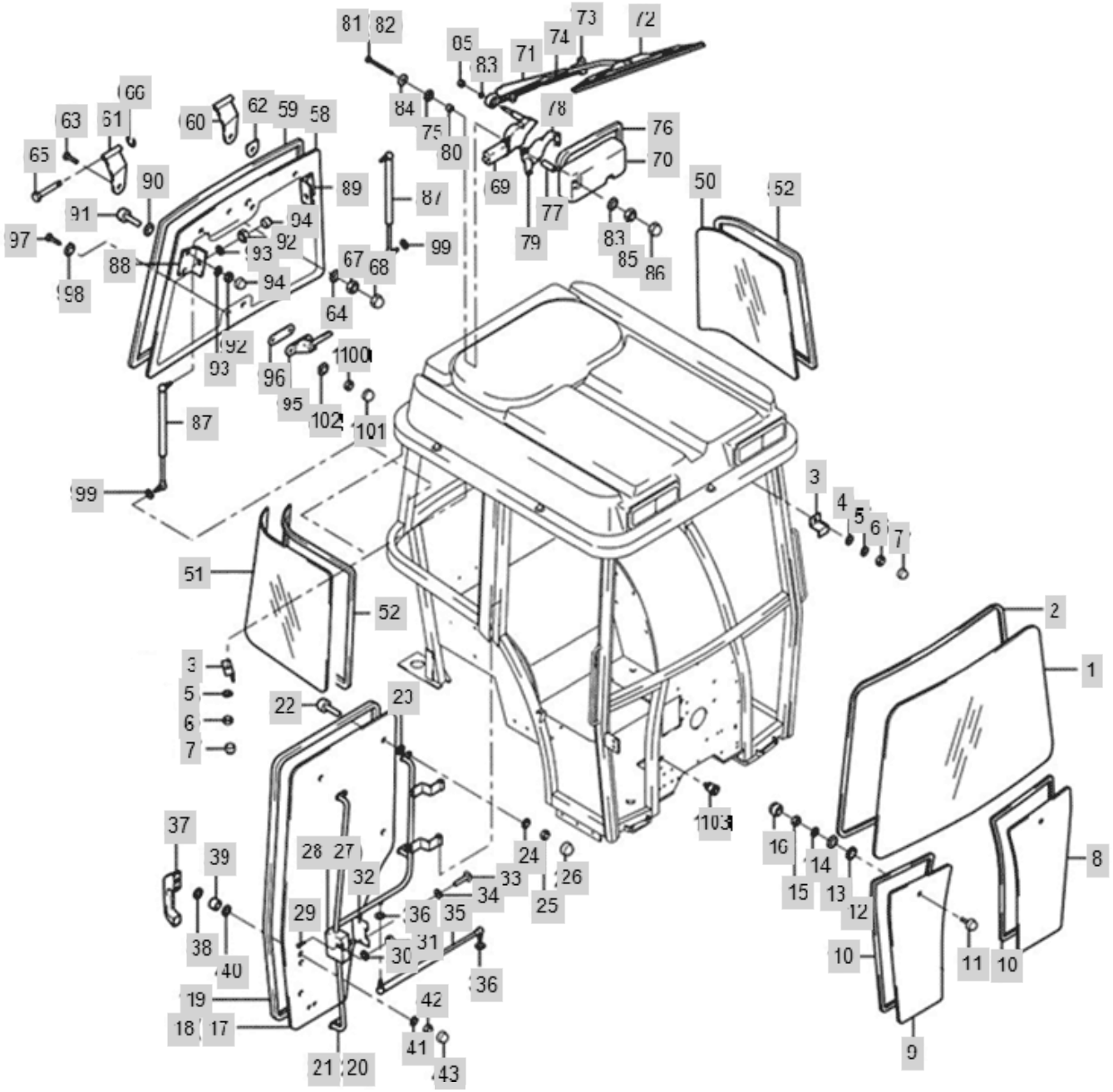

FIG S202 BRANSON 6530C	DOOR, CAB	Year/Month 2020/02

KeyNo.	Part Number	Part Name	Quantity	Other
1	FBK2010000A1	WINDOW, FRONT	1	
2	FBK2020000A3	PACKING	1	
3	FTK2030000A4	BRACKET, WINDOW FRONT	6	
4	22117-060000	WASHER, PLAIN (Φ 06)	2	
5	22217-060000	WASHER, SPRING (Φ 06)	6	
6	26711-060002	NUT	6	
7	TNA4303009A9	CAP NUT	6	
8	FBK2080000A3	WINDOW(L), FRONT	1	
9	FBK2090000A3	WINDOW(R), FRONT	1	
10	FTK2100000A9	PACKING, FRONT LOWER	2	
11	THA4902000A9	BOLT M8*25	2	
12	THA4904000A9	PACKING 1	2	
13	22117-080000	WASHER, PLAIN (Φ 08)	2	
14	22217-080000	WASHER, SPRING (Φ 08)	2	
15	26716-080002	NUT,HEX (D8)	2	
16	THA4912000A9	CAP NUT	2	
17	FBK2170000A3	WINDOW LH, DOOR	1	
18	FBK2180000A3	WINDOW RH, DOOR	1	
19	FBK2190000A3	PACKING, DOOR	2	
20	FBK2200000A3	DOOR ASSY LH (30 SERIES)	1	
21	FBK2210000A3	DOOR ASSY RH (30 SERIES)	1	
22	THA4903000A9	CUSHION BOLT	6	
23	THA4904000A9	PACKING 1	6	
24	22117-080000	WASHER, PLAIN (Φ 08)	6	
25	26716-080002	NUT,HEX (D8)	6	
26	THA4912000A9	CAP NUT	6	
27	FTK2270000A3	RATCH(L). DOOR	1	
28	FTK2280000A3	RATCH(R),DOOR	1	
29	26557-080352	SCREW BOLT	2	
30	22117-080000	WASHER, PLAIN (Φ 08)	2	
31	26711-080002	NUT	2	
32	FTK2260000A3	COVER,RATCH	2	
33	26557-060152	SCREW	2	
34	22217-060000	WASHER, SPRING (Φ 06)	2	
35	TA00017788A	GAS SPRING	2	
36	22217-080000	WASHER, SPRING (Φ 08)	4	
37	FTK2370000A3	HANDLE ASS'Y	2	
38	THA4904000A9	PACKING 1	4	
39	THA4913000A9	COLLAR	4	
40	FTK2390000A9	WAHSER,PARALLEL	4	
41	22217-060000	WASHER, SPRING (Φ 06)	4	
42	26711-060002	NUT	4	
43	THA4303009A9	CAP	4	
50	FBK2500000A3	WINDOW L	1	
51	FBK2510000A3	WINDOW R	1	

FIG S202 BRANSON 6530C	DOOR, CAB	Year/Month 2020/02

KeyNo.	Part Number	Part Name	Quantity	Other
52	FBK2520000A3	PACKING	2	
58	FBK2580000A3	WINDOW, REAR	1	
59	FBK2590000A9	PACKING	1	
60	TA00023397A	BRACKET L	1	
61	TA00023398A	BRACKET R	1	
62	THA4901000A9	PACKING	2	
63	THA4902000A9	BOLT M8*25	2	
64	22117-080000	WASHER, PLAIN (Φ 08)	2	
65	THA4917000A9	PIN	2	
66	22272-000080	RING, CIRCLIP (Φ 08)	2	
67	26711-080002	NUT	2	
68	THA4912000A9	CAP NUT	2	
69	FTK2690000A9	WIPER MOTOR	1	
70	FTK2700000A3	COVER,MOTOR	1	
71	FTK2710000A9	WIPER ARM	1	
72	FTK2720000A3	WIPERBLADE12"	1	
73	FTK2730000A9	NOZZLE, WPIER	1	
74	FTK2740000A9	HOSE, WASHER	1	
75	THA4906000A9	GROMMET	1	
76	THA4904000A9	PACKING 1	4	
77	FTK2770000A4	COLLAR, PACKING	2	
78	FTK2780000A4	BRACKET A, MOTOR	1	
79	FTK2790000A4	BRACKET B,MOTOR	1	
80	THA4913000A9	COLLAR	2	
81	26117-080752	BOLT	1	
82	26117-080602	BOLT	1	
83	22117-080000	WASHER, PLAIN (Φ 08)	2	
84	26711-080002	NUT	2	
85	26711-080002	NUT	2	
86	THA4912000A9	CAP NUT	2	
87	TA00026423A	GAS SPRING(DOOR)	2	
88	TCJ1022000A3	BRACKETR	1	
89	TCJ1023000A3	BRACKETL	1	
90	THA4904000A9	PACKING 1	4	
91	THA4902000A9	BOLT M8*25	4	
92	26711-080002	NUT	6	
93	22217-080000	WASHER, SPRING (Φ 08)	6	
94	THA4912000A9	CAP NUT	6	
95	THA4305009A9	KNOB ASSY,REAR WINDOW	1	
96	THA4904000A9	PACKING 1	2	
97	THA4903000A9	CUSHION BOLT	2	
98	22117-080000	WASHER, PLAIN (Φ 08)	2	
99	22217-080000	WASHER, SPRING (Φ 08)	2	
100	26711-080002	NUT	2	
101	THA4912000A9	CAP NUT	2	

FIG S202 BRANSON 6530C	DOOR, CAB	Year/Month 2020/02

KeyNo.	Part Number	Part Name	Quantity	Other
102	FTK2A20000A4	GROMMET	6	
103	FTK2A30000A4	BOOT	1	
104	TA00015449A	WINDOW, REAR	1	
105	TA00015450A	WINDOW PACKING, REAR LOW	1	
N/A	TA00060728A	KEY, CABIN	1	

FIG S203-1 BRANSON 6530C	ROOF, CAB	Year/Month 2020/02

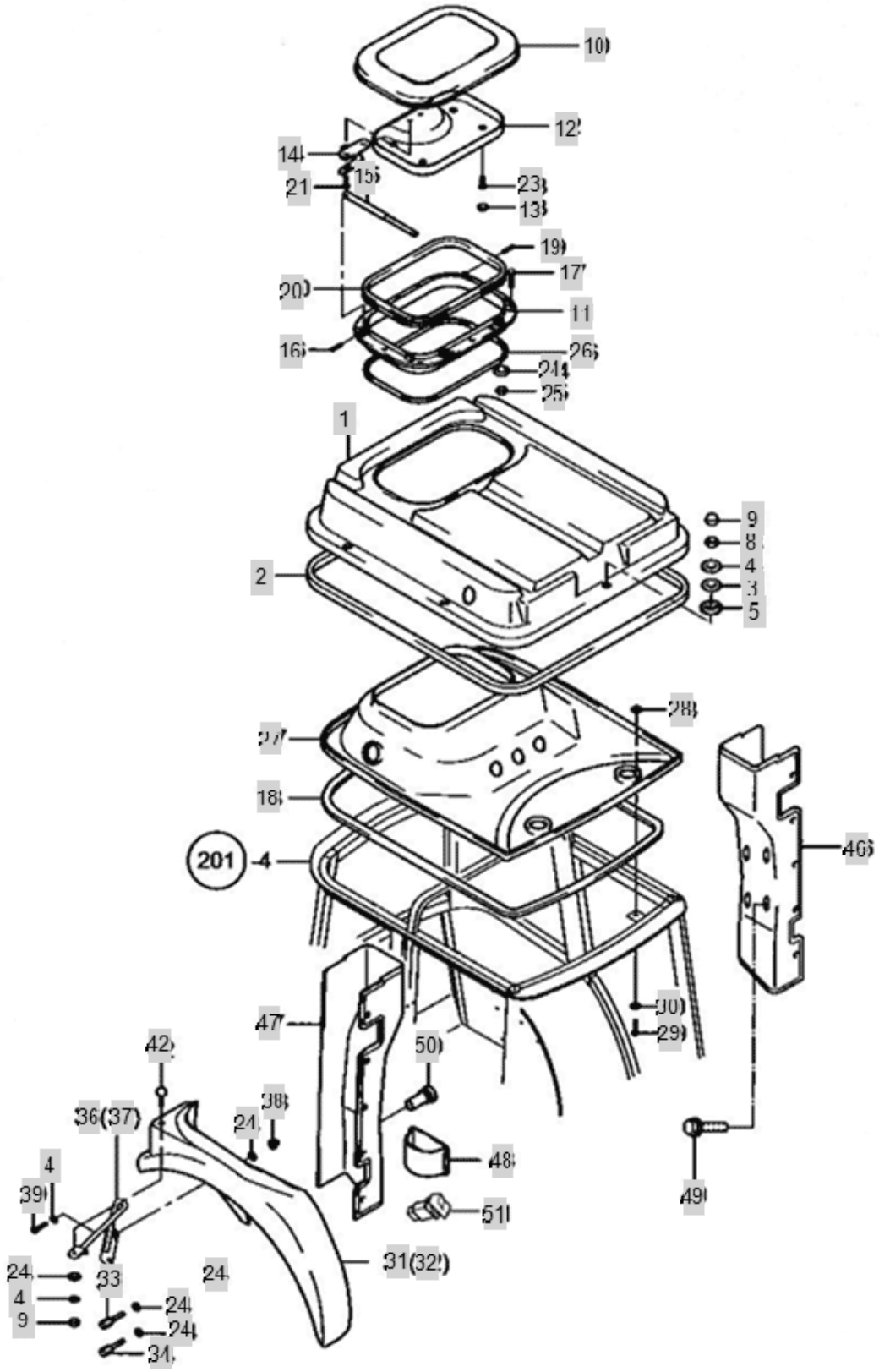

FIG S203-1 BRANSON 6530C	ROOF, CAB	Year/Month 2020/02

KeyNo.	Part Number	Part Name	Quantity	Other
1	FBK3010000A3	ROOF ASSY (30 SERIES)	1	
2	FBK3020000A9	PAD	1	
3	22127-080000	WASHER, PLAIN (D80)	4	
4	22217-080000	WASHER, SPRING (Φ 08)	10	
5	THA4901000A9	PACKING	4	
8	26117-080252	BOLT8X20	4	
9	THA4912000A9	CAP NUT	6	
10	TA00000232A	SUN_ROOF	1	
11	FTK3040000A9		1	
12	FTK3050000A9		1	
13	FTK3060000A9		4	
14	TA00021525A	HANDLE(SUN ROOF EF2)	1	
15	FTK3080000A9	SPRING ASSY	2	
16	FTK3090000A9	PIN	2	
17	FTK3100000A9		12	
18	FBK3110000A9	PACKING	1	
19	FTK3120000A9	PIN	2	
20	FTK3130000A9	PACKING	1	
21	FTK3140000A9	SCREW	2	
23	26117-050152	BOLT	4	
24	22117-080000	WASHER, PLAIN (Φ 08)	38	
25	26717-050002	NUT	12	
26	FTK3150000A9	INSERT NUT	1	
27	FBK3160000A9	ROOF	1	
28	THA3703000A3	SPEEDNUT	8	
29	26117-060252	BOLT	8	
30	22117-060000	WASHER, PLAIN (Φ 06)	8	
31	FBK3170000A3	FENDER[L]	1	
32	FBK3180000A3	FENDER[R]	1	
33	THA4929000A9		14	
34	THA4930000A9	SCREW38L	8	
36	FBK3190000A3	SUPPORT L, FENDER	1	
37	FBK3200000A3	SUPPORT R, FENDER	1	
38	THA4927000A9		4	
39	26117-080402	BOLT	4	
42	THA4903000A9	CUSHION BOLT	2	
46	FBK3460000A1	COVER L	1	
47	FBK3470000A1	COVER R	1	
48	THA4303013A9	ASHTRAY	1	
49	26106-080202	SQR FLANGE BOLT	8	
50	FTK3500000A9	CIGAR LIGHTER	1	
51	FBK3510000A3	EMERGENCY SWITCH	1	

FIG S204-1 BRANSON 6530C	WIRE HARNESS, CAB	Year/Month 2020/02

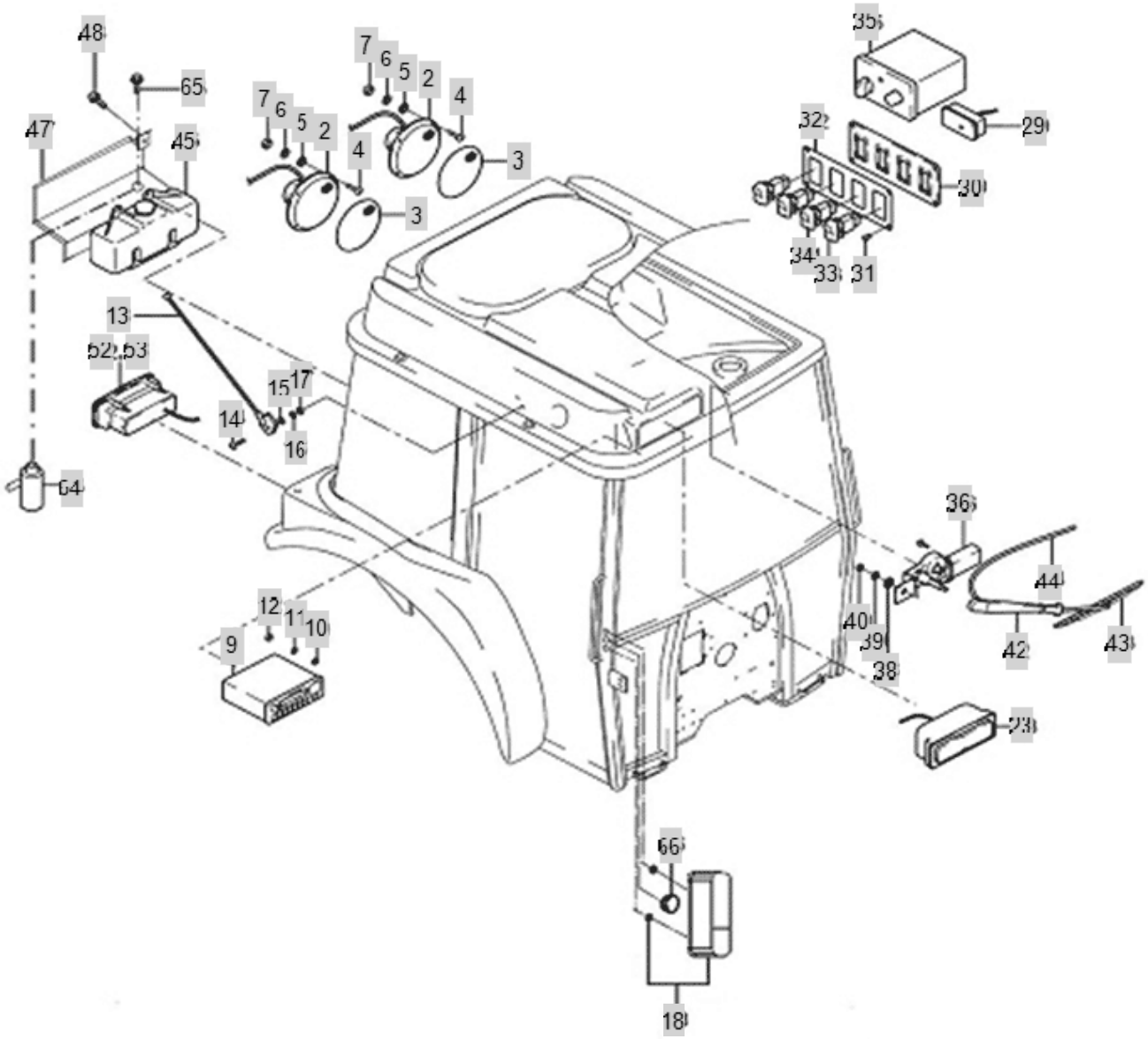

FIG S204-1 BRANSON 6530C	WIRE HARNESS, CAB	Year/Month 2020/02

KeyNo.	Part Number	Part Name	Quantity	Other
1	FBK4010000A0	WIRE HARNESS(CABIN)	1	
2	DB18270000A3	SPEAKER	2	
3	THA4017000A9	GRILL, SPEAKER	2	
4	26581-040202	BINDING SCREW	8	
5	22117-040000	WASHER, PLAIN (Φ 04)	8	
6	22217-040000	WASHER, SPRING (Φ 04)	14	
7	26717-040002	NUT	8	
9	CJP5140000A3	STEREO,CAR	1	
10	22117-040000	WASHER, PLAIN (Φ 04)	2	
11	22217-040000	WASHER, SPRING (Φ 04)	1	
12	26717-040002	NUT	1	
13	TTJ2040000A9	ANTENNA ASSY	1	
14	26557-060202	SCREW	1	
15	22127-060000	WASHER, PLAIN (Φ 06)	1	
16	22217-060000	WASHER, SPRING (Φ 06)	1	
17	26717-060002	NUT	1	
18	FBE1130000A3	COMBINATION LAMP	2	
23	FTK4030000B3	LAMP. WORKING	4	
29	THA4213000A9	INTERIOR LAMP	1	
30	CVP5170000A4	PANNEL,SWITCH	1	
31	22685-400752		4	
32	THA3846000A9	SWITCH NAME PLATE	1	
33	THA4309000A9	WIPER SWITCH	2	
34	THA4324000A9	SWITCH,ON-OFF	2	
35	TTL5510000A9	CONTROL SWITCH ASSY	1	
36	TTK6120000A9	WIPER MOTOR	1	
38	22137-080000	WASHER, PLAIN (Φ 08)	2	
39	22217-080000	WASHER, SPRING (Φ 08)	2	
40	26717-080002	NUTM8	3	
42	FTK2710000A9	WIPER ARM	1	
43	THA5810000A9	WIPER BRUSH	1	
44	THA4628000A9		1	
45	DB18280000A4	WASHER TANK ASS'Y	1	
47	FBK4470000A3	COVER	1	
48	26106-080122	Bolt, Hexa (8-12)	3	
52	FBD2160000A3	COMBINATION LAMP (R) L	1	
53	FBD2170000A3	COMBINATION LAMP (R) R	1	
64	TB43640000A4	AIRBREEDERASS'Y	1	
65	26106-080122	Bolt, Hexa (8-12)	1	
66	TCE2010000A4	GROMMET	2	

FIG S205-1 BRANSON 6530C	AIR CONDITIONER A	Year/Month 2020/02

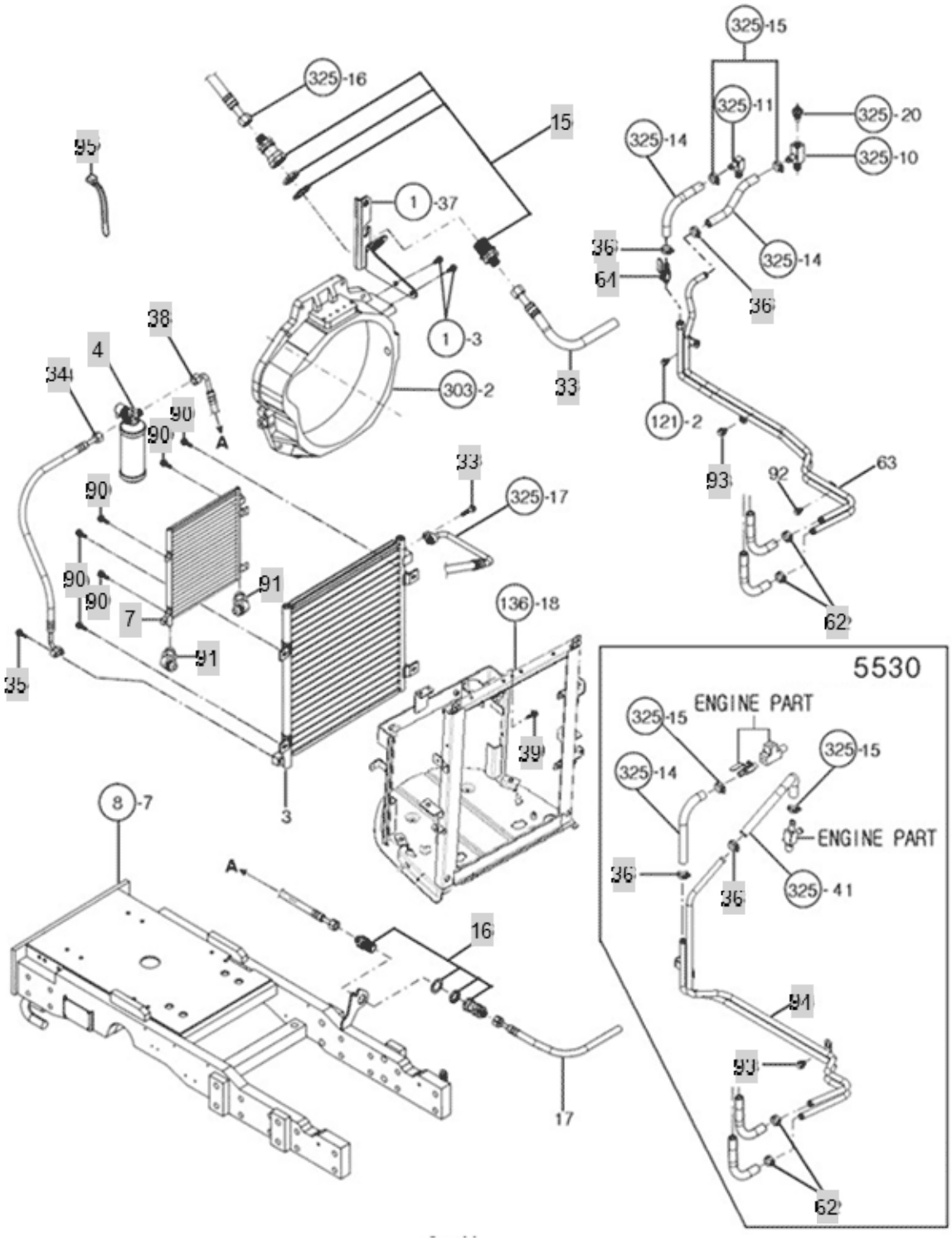

FIG S205-1 BRANSON 6530C	AIR CONDITIONER A	Year/Month 2020/02

KeyNo.	Part Number	Part Name	Quantity	Other
3	FTK5030000A3	CONDERSER ASSY	1	
4	TTL5040000B3	RECEIVER DRIER	1	
7	FBK5030000A0	OIL COOLER	1	
15	TTL5220000A3	Q/C(7/8")	1	
16	TTL5210000A3	Q/C(5/8")	1	
33	26106-080302	HEX BOLT, FLANGE	1	
34	FTK5340000B4	RADIATOR HOSE	1	
35	26106-060302	Bolt, Hexa (6-30)	1	
36	23000-019000	Clip, Hose (Φ19)	2	
38	FTK5380000A3	HIGH PRESSURE	1	
39	26106-060162	HEXFLANGEBOLT	1	
62	23000-022000	CLAMP,HOSE	2	
64	FTK5640000A4	HEATER VALVE	1	
90	26015-060162	BOLT	8	
91	FT33060000A4	45ELBOW[3/8]	2	
93	26106-100162	SCREW,HEXFLANGEHEADCAP	1	
94	FLK5630000A0	HEAT PIPE ASS'Y	1	
95	TTB9420000A4	Band, Wire (250mm)	4	

FIG S205-2 BRANSON 6530C	AIR CONDITIONER B	Year/Month 2020/02

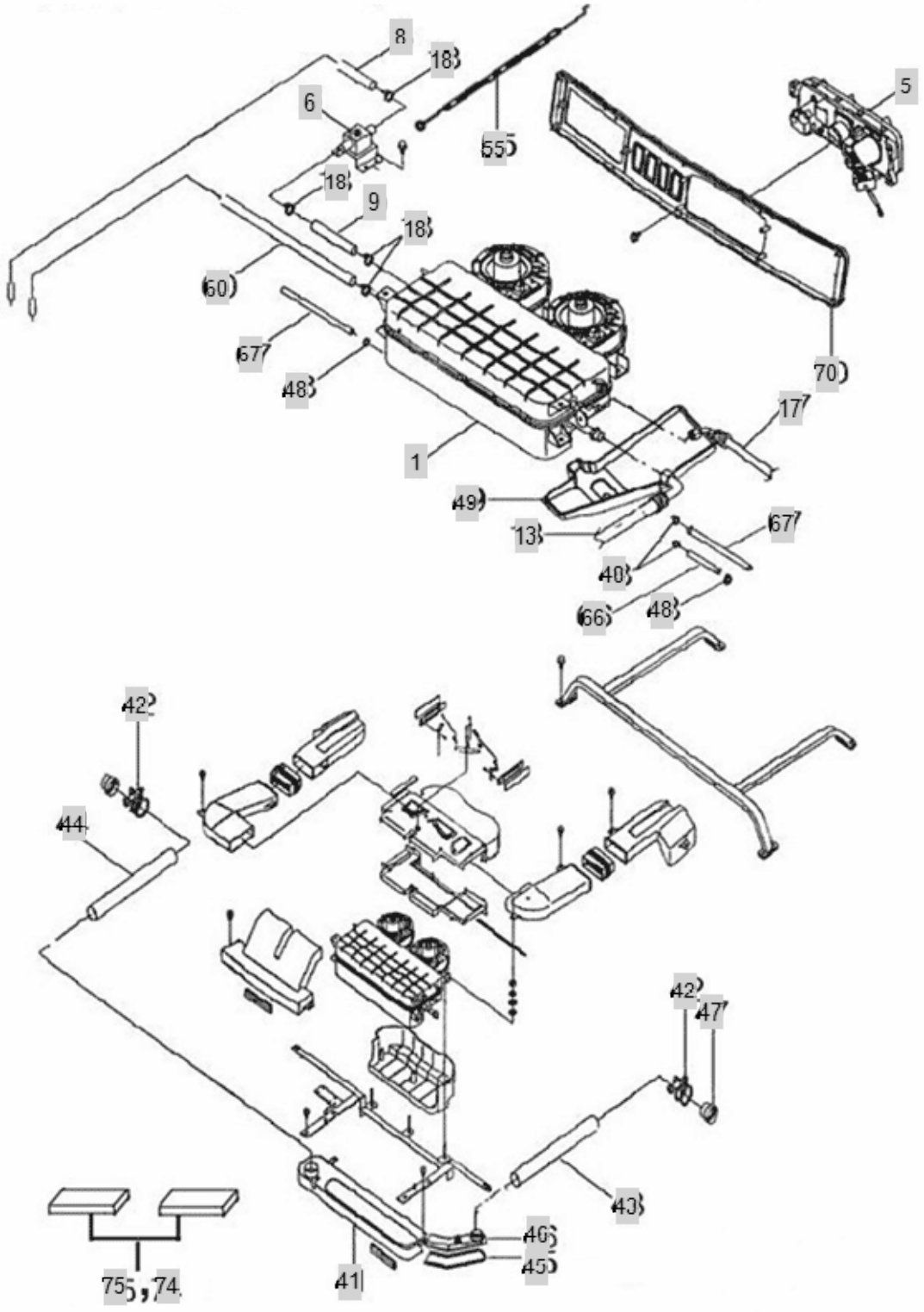

FIG S205-2 BRANSON 6530C	AIR CONDITIONER B	Year/Month 2020/02

KeyNo.	Part Number	Part Name	Quantity	Other
1	FBK5010000A0	EVAPORATOR UNIT	1	
5	FBK5050000A0	PANEL ASS'Y, SWITCH	1	
6	FBK5060000A3	HEAT VALVE	1	
8	FBK5080000A3	HOSE A	1	
9	FBK5090000A3	HEAT HOSE B	1	
13	FBK5130000A3	HOSE A	1	
17	FBK5170000A3	HOSE B	1	
18	23000-022000	CLAMP,HOSE	4	
41	FBK5410000A1	DUCT ASS'Y, AIR-CON	1	
42	23010-070000	HOSECLAMP	4	
43	FBK5430000A3	HOSE L, AIR	1	
44	FBK5440000A3	HOSE R, AIR	1	
45	FBK5450000A3	DUCT(DOWN)	1	
46	FBK5460000A3	DUCT(UP)	1	
47	TTL5500000A9	CONNECTOR	2	
48	23000-013000	Clip, Hose (Φ13)	4	
49	FBK5490000A3	GUTTER	1	
55	FBK5550000A4	CABLE(SWITCH)	1	
60	FBK5600000A3	HOSE D	1	
66	FBK5660000A3	DRAIN HOSE D	1	
67	FBK5670000B3	DRAIN HOSE E	2	
70	FBK5700000A0	COVER, SWITCH	1	
74	FBK5120000A3	BRACKET	2	
75	FBK5750000A3	AIR-FILTER	2	

FIG S303 BRANSON 6530C	FLYWHEEL HOUSING	Year/Month 2020/02

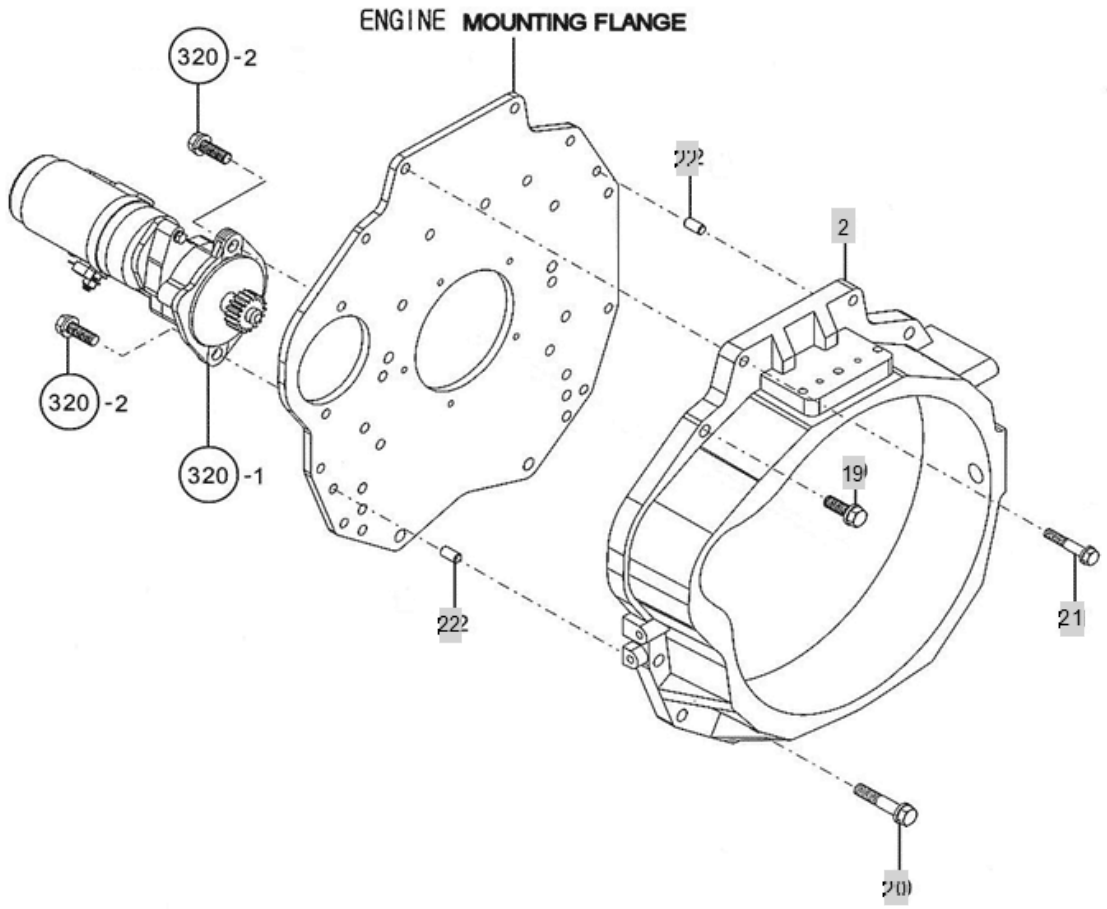

FIG S303 BRANSON 6530C	FLYWHEEL HOUSING	Year/Month 2020/02

KeyNo.	Part Number	Part Name	Quantity	Other
2	FBU3020000A0	FLYWHEEL HOUSING	1	
19	FBU3190000A4	BOLT W/WASHER	7	
20	FBU3200000A4	BOLT W/WASHER	2	
21	FBU3210000A4	BOLT W/WASHER	2	
22	22312-100200	PIN, DOWEL (10-20)	2	

FIG S306 BRANSON 6530C	Air Cleaner	Year/Month 2020/02

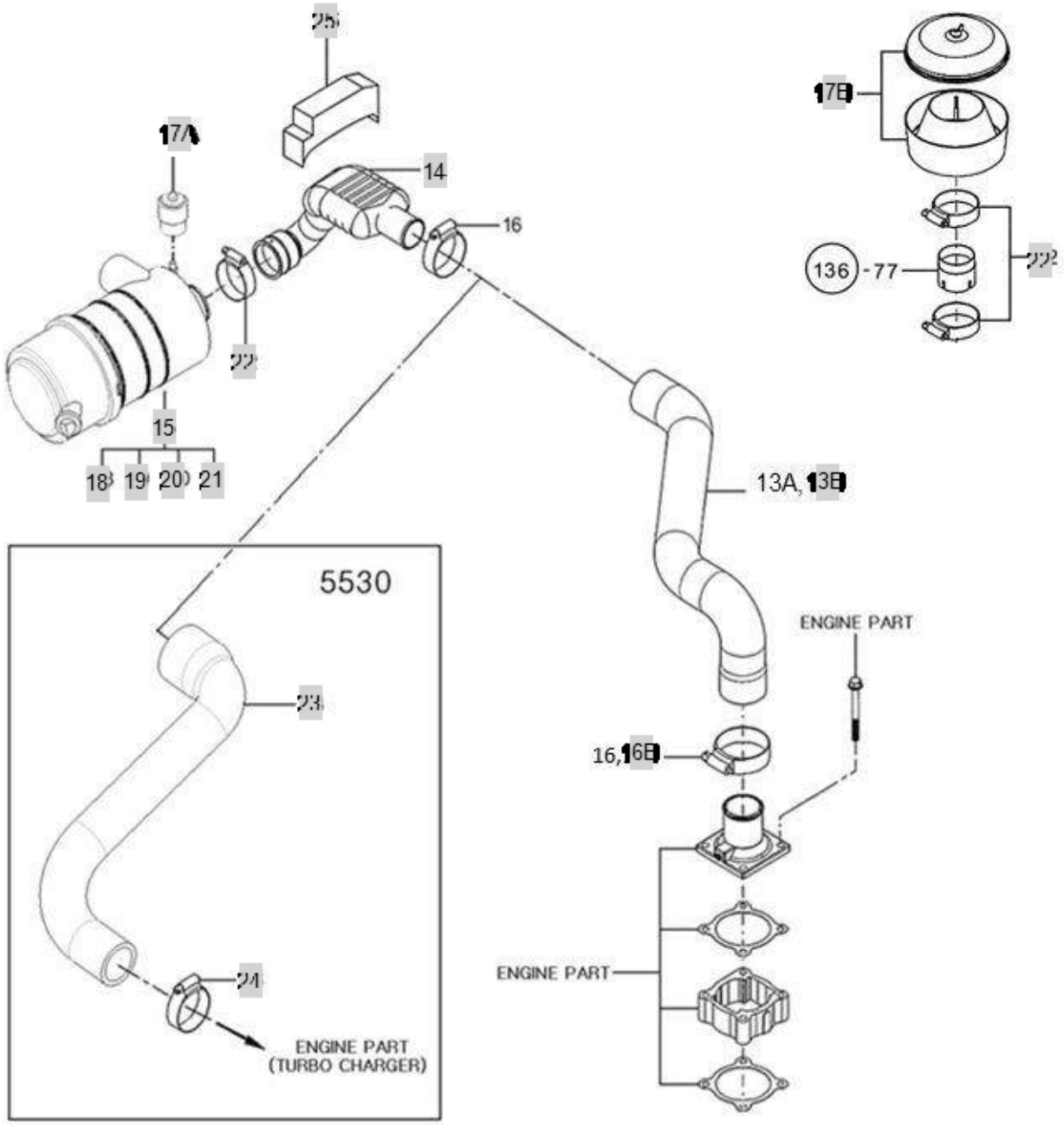

FIG S306 BRANSON 6530C	Air Cleaner	Year/Month 2020/02

KeyNo.	Part Number	Part Name	Quantity	Other
13B	FBU6130000A0	INTAKE HOSE	1	
14	HLT0615000B0	SUC. SILENCER	1	
15	HLT0621000A2	AIRCLEANER A'SSY	1	
16A	23000-070000	CLAMP,HOSE	1	
16B	23000-080000	HOSECLAMP80	1	
17A	FBU6230000A4	INDICATOR	1	
17B	HLT0620000A2	PRE-CLEANER ASSY	1	
18	HLT0621010A9	BODY, AIRCLEANER	1	
19	HLT0621020A9	ELEMENT, AIR CLEANER (OUTER)	1	
20	HLT0621030A9	ELEMENT, AIR CLEANER (INNER)	1	
21	HLT0621040A9	COVER	1	
22	23000-080000	HOSECLAMP80	1	
23	FLU6130000A2	HOSE	1	
24	23000-054000	HOSECLAMP54	1	
25	FBU6250000A4	exclude proofing material	1	

FIG S307-3 BRANSON 6530C	EXH. SILENCER(6530)	Year/Month 2020/02

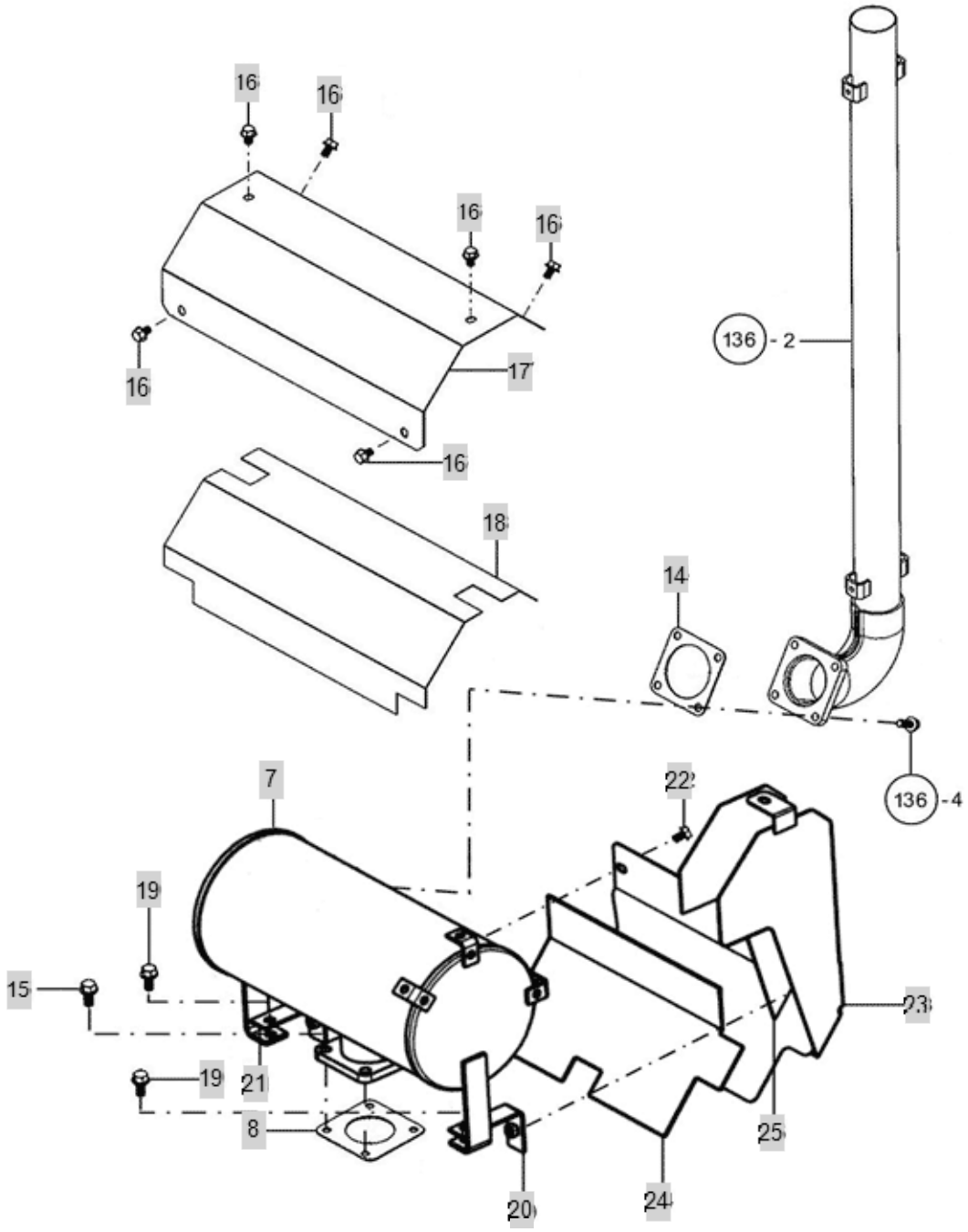

FIG S307-3 BRANSON 6530C	EXH. SILENCER(6530)	Year/Month 2020/02

KeyNo.	Part Number	Part Name	Quantity	Other
7	FBU7070000C0	EXHAUST MUFFLER	1	
8	FBU7080000A4	COMPRESSOR BRACKET	1	
14	HH0706000EA4	GASKET, EXHAUST MUFFLER	1	
15	26106-100202	HEX BOLT, (10-20)	4	
16	26106-080122	Bolt, Hexa (8-12)	6	
17	FBU7170000A2	PLATE	1	
18	FBU7180000B2	insulator	1	
19	26106-100162	SCREW,HEXFLANGEHEADCAP	2	
20	FBU7200000A4	COVER BRACKET R	1	
21	FBU7210000A4	COVER BRACKET F	1	
22	26106-080162	SCREW,HEXFLANGEHEADCAP	2	
23	FBU7230000A2	INSULATION COVER	1	
24	FBU7240000A4	INSULATION	1	
25	FBU7250000A4	INSULATION B	1	

FIG S309 BRANSON 6530C	FLY WHEEL (6530)	Year/Month 2020/02

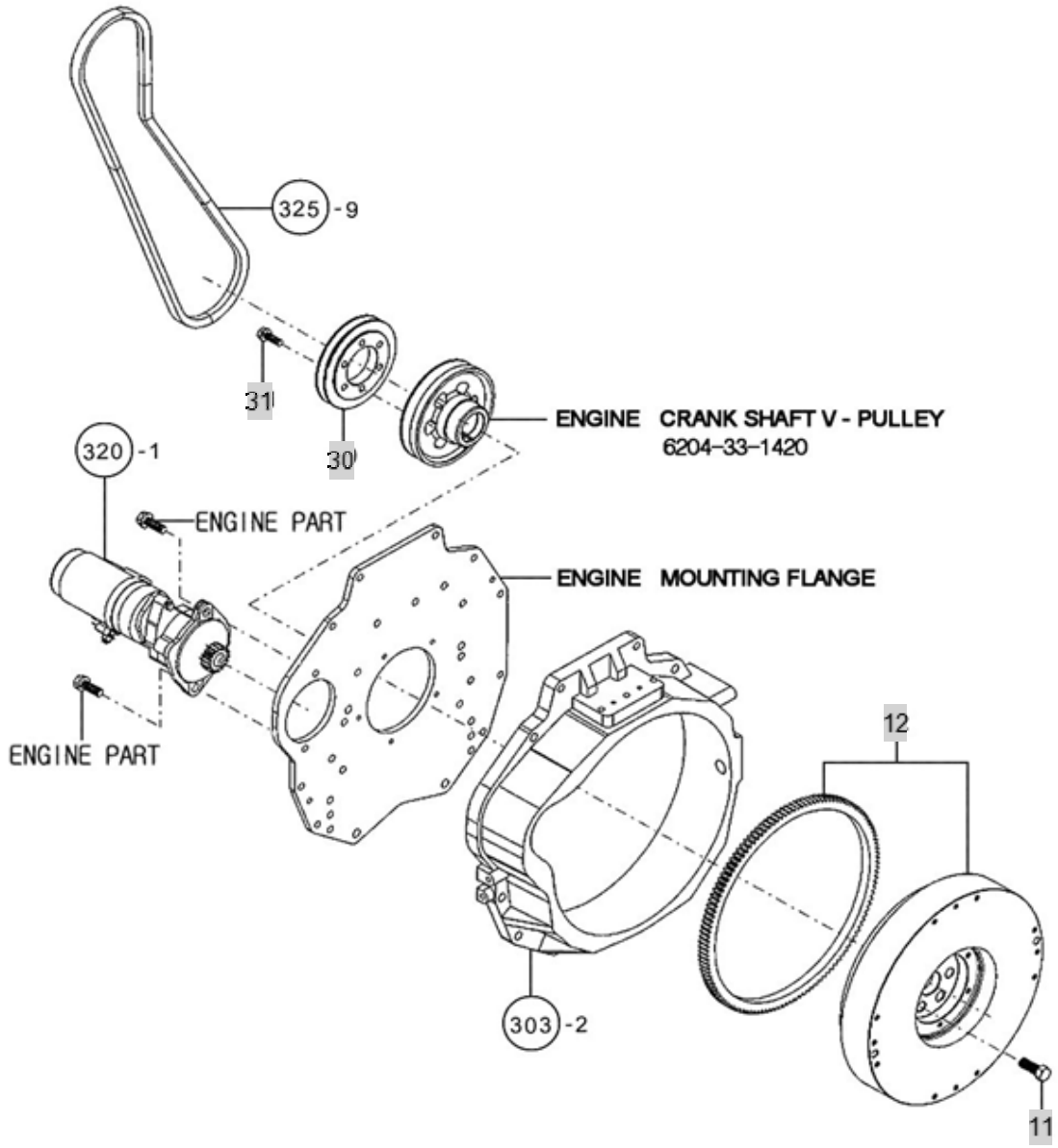

FIG S309 BRANSON 6530C	FLY WHEEL (6530)	Year/Month 2020/02

KeyNo.	Part Number	Part Name	Quantity	Other
11	FBU9110000A4	BOLT	6	
12	FBU9120000A9	FLYWHEEL ASSY	1	
30	FBU9300000A2	V PULLEY	1	
31	26013-080252	Bolt, Hexa (8-25)	6	

FIG S312-3 BRANSON 6530C	COOLING WATER SYSTEM(6530)	Year/Month 2020/02

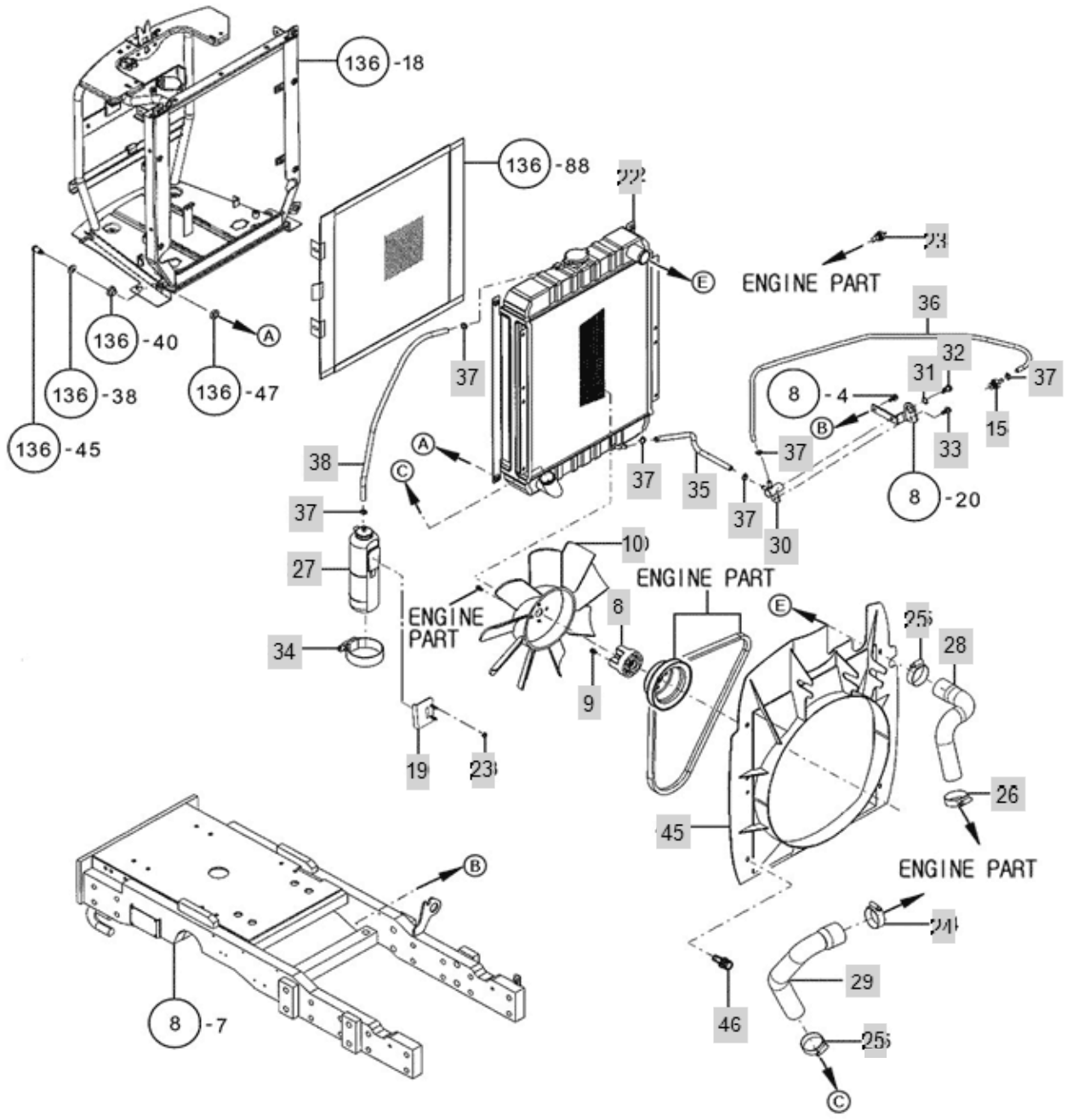

FIG S312-3 BRANSON 6530C	COOLING WATER SYSTEM(6530)	Year/Month 2020/02

KeyNo.	Part Number	Part Name	Quantity	Other
8	FBV2080000A3	SPACER	1	
9	26106-080302	HEX BOLT, FLANGE	4	
10	HRC3000500A2	COOLING FAN (D405)	1	
15	FBV2150000A4	JOINT	1	
19	HLT1262000A4	BRACKET, SUB-TANK	1	
22	FBV2220000A1	RADIATOR	1	
23	26367-080002	HEX FLANGE NUT (Φ8)	2	
24	23000-054000	HOSECLAMP54	1	
25	23000-048000	CLAMP,HOSE	2	
26	23000-048000	CLAMP,HOSE	1	
27	CA09270000C2	COOLANT RESERVOIR	1	
28	FBV2280000A1	COOLING WATER HOSE A	1	
29	FBV2290000A0	COOLING WATER HOSE B	1	
30	FBV2300000A3	FRONT COCK	1	
31	23414-120000	WASHER, PLAIN (Φ 12)	1	
32	23857-060000	BOLT, CONNECTING	1	
33	26106-080162	SCREW,HEXFLANGEHEADCAP	1	
34	CA09310000A4	STRAP,SUBTANKMTG	1	
35	FBV2350000A4	DRAIN HOSE A	1	
36	FBV2360000A4	DRAIN HOSE B	1	
37	23080-013000	Clamp, Hose (Φ13)	6	
38	HLT1246000B4	HOSE	1	
45	FBV2450000A0	SHROUND	1	
46	26016-080162	HEX BOLT WITH WASHER	5	
7	FBV2190000A3	SENSOR	1	

FIG S320 BRANSON 6530C	STARTING MOTOR (6530)	Year/Month 2020/02

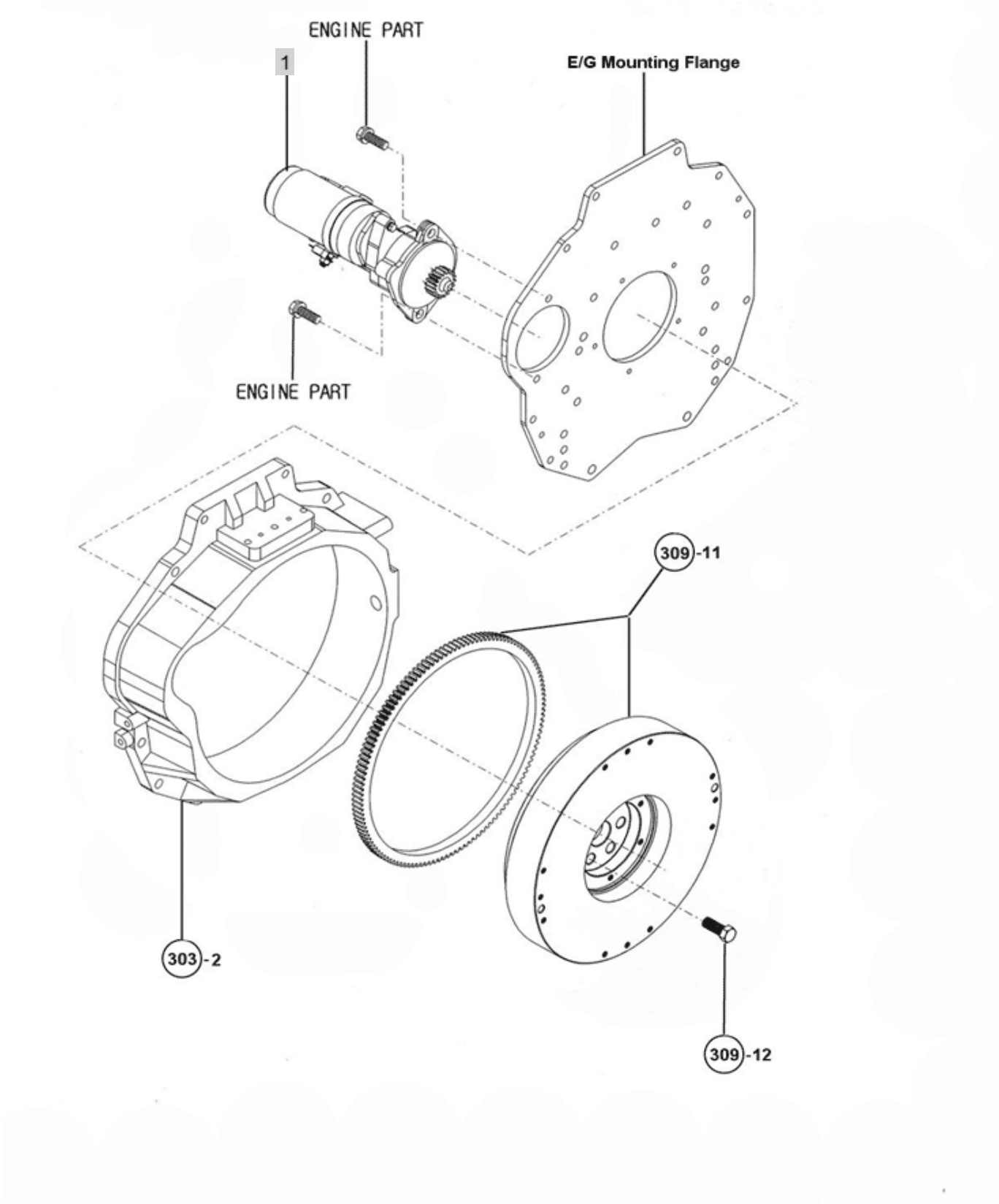

FIG S320 BRANSON 6530C	STARTING MOTOR (6530)	Year/Month 2020/02

KeyNo.	Part Number	Part Name	Quantity	Other
1	HH20010000A1	STARTING MOTOR ASSY	1	

FIG S325-2 BRANSON 6530C	COMPRESSOR(6530)	Year/Month 2020/02

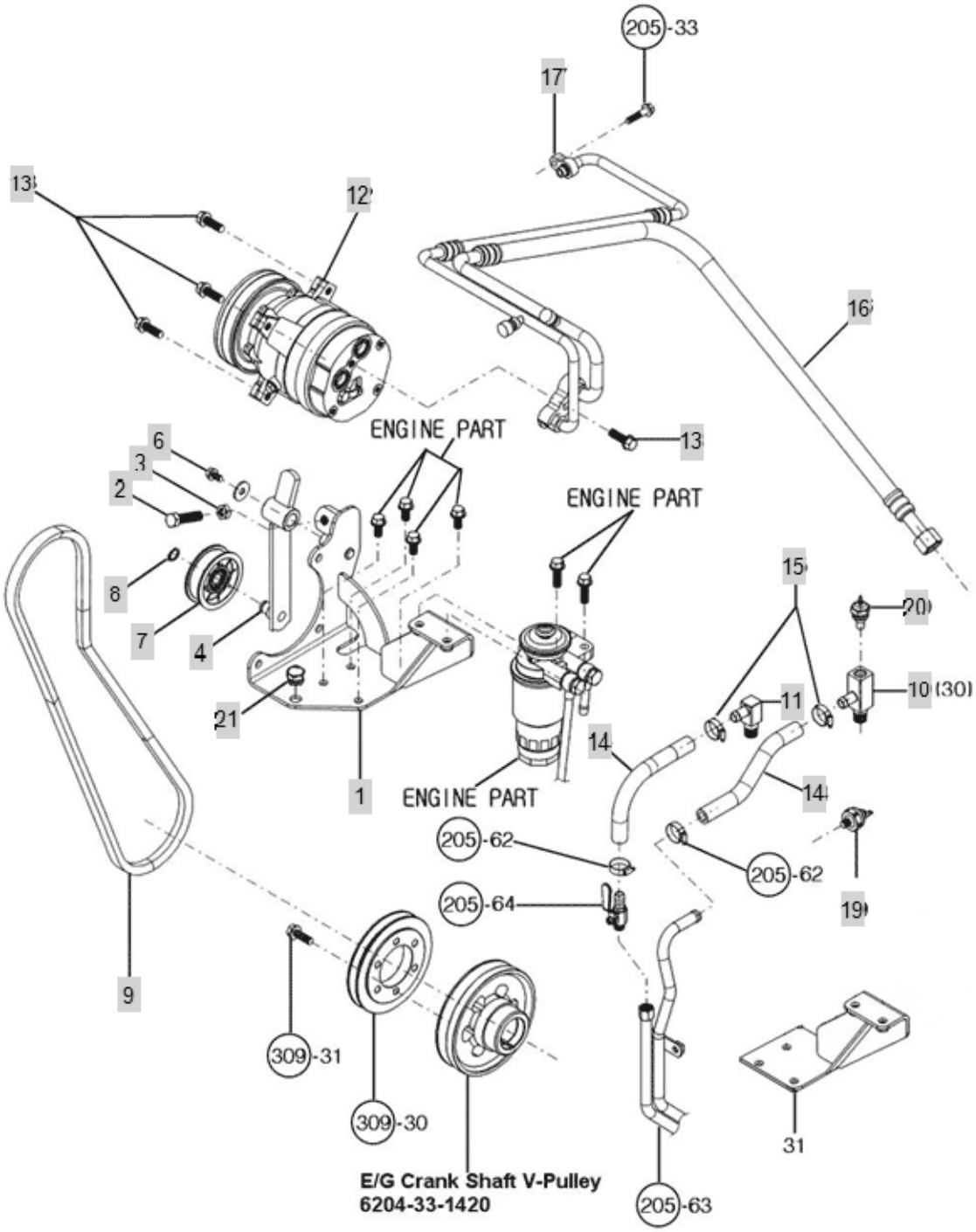

FIG S325-2 BRANSON 6530C	COMPRESSOR(6530)	Year/Month 2020/02

KeyNo.	Part Number	Part Name	Quantity	Other
1	FBK5500000A0	COMPRESSOR BRACKET ASSY	1	
2	MB14060000A4	BOLT,TENSION	1	
3	26777-120002	NUT	1	
4	FBK5230000A2	TENSION ARM ASSY	1	
5	22157-080000	WASHER, PLAIN (Φ 08)	1	
6	26013-080162	Bolt, Hexa (8-16)	1	
7	FBW5070000A4	PULLEY	1	
8	22242-000150	SNAP RING, SHAFT (Φ 15)	1	
9	TTL5280000B9	VBELT(A56)	1	
10	FBW5100000A3	T JOINT	1	
11	CEE2080000A4	ELBOW,PLAINUNION	1	
12	TTL5020000B2	COMPRESSOR	1	
13	26136-100352	BOLT, HEX FLANGE	4	
14	FBK5100000A4	HOSE	2	
15	23000-022000	CLAMP,HOSE	2	
16	FBK5180000A0	LOW PRESSURE	1	
17	FBK5320000A0	CONDENSER HOSE	1	
19	HA09250000A3	SWITCH,OILPRESSURE	1	
20	HH12210000A3	SENSOR,GLOWPLUG	1	
21	TCE2010000A4	GROMMET	1	