KUKJE Branson 7845RP(US) Branson Tractor

Parts Catalogue

BRANSON TRACTOR

CONTENTS

GROUP NO	GROUP NAME	PAGE
C001	PTO & MAIN DAMPER	6
C002	MAIN PUMP	8
C003	PST VALVE	10
C004	OIL COOLER	12
C005	HYDRAULIC FILTER	14
C006-1	SELECTING CONTROL V/V,JOY STICK	16
C006-2	SELECTING CONTROL V/V,JOY STICK(2019.04~)	18
C007	LIFT CYLINDER	20
C008	BRAKE ROD	22
C009	BRAKE PEDAL	24
C010	RADIATOR	26
C011	COOLING WATER SUB-TANK	28
C012	FRONT AXLE BRACKET	30
C013	FRONT AXLE SUPPORT	32
C014-1	PROPELLER SHAFT	34
C014-2	PROPELLER SHAFT(2019.04~)	36
C015	AIR CLEANER	38
C016	INTERCOOLER	40
C017	BATTERY	42
C018	COOLING FAN	44
C019	FUEL TANK ASS`Y	46
C020	FUEL TANK	48
C021	EXHAUST PIPE MOUNTING-USA	50
C022	EXHAUST PIPE-USA	52
C023	SUB STEP	54
C024	ROPS ASS`Y	56
C025	BONNET ASS`Y	58
C026	BONNET	60
C027	ACCELERATION SYSTEM	62
C028	HORN	64
C029-1	STEERING COLUMN	66
C030-1	COLUMN STAY & CLUTCH PEDAL	68
C030-2	COLUMN STAY & CLUTCH PEDAL(2019.04~)	70
C032	DRAFT LINK	72
C033	CENTER LINK	74

GROUP NO	GROUP NAME	PAGE
C034	LIFT LINK	76
C035	DRAWBAR	78
C036	PTO COVER	80
C037	LEVER KNOB	82
C039	REAR SCV LEVER	84
C040	T/M OIL IN-LET	86
C041	DRIVER`S SEAT	88
C042	FRONT WHEEL & TIRE	90
C043	REAR WHEEL & TIRE	92
C044	DASH BOARD	94
C045	FENDER ASS`Y	96
C046	FOOT FRAME	98
C047	HEAT INSULATOR ASS`Y	100
C048	STOP-VALVE KNOB ASS`Y	102
C049.1-1	LABEL	104
C049.1-2	LABEL(2019.04~)	106
C049.2	LABEL	108
C050	HARNESS	110
C051	SPARE TOOLS	112
E001	CYLINDER BLOCK	114
E002	V-PULLY_CRANK SHAFT	116
E003	AIR HEATER	118
E004	APPROVAL, AGENCY	120
E005	CRANK SHAFT	122
E006	BREATHER, CRANKCASE	124
E007	CAMSHAFT	126
E008	FRONT GEAR ACCESSORY DRIVE	128
E009	IDLE GEAR	130
E010	ALTERNATOR	132
E011	BALANCE ASS'Y	134
E012	FAN DRIVE	136
E013	DRIVE PULLY	138
E014	FUEL FILTER	140
E015	FLYWHEEL HOUSING	142
E016	16. FUEL INJECTION	144

GROUP NO	GROUP NAME	PAGE
E017	PLUMBING, FUEL	146
E018	FLYWHEEL	148
E019	COVER, FRONT GEAR	150
E020	HEAD, CYLINDER	152
E021	MANIFOLD, INTAKE	154
E022	INJECTOR	156
E023	ARRANGEMENT, LIFTING	158
E024	COOLER, ENGINE OIL	160
E025	FILTER, LUBRICATING OIL	162
E026	GAUGE, OIL LEVEL	164
E027	PUMP, LUBRICATING OIL	166
E028	NOZZLE, PISTON COOLING	168
E029	ARRANGEMENT, OIL FILL	170
E030	OIL PAN	172
E031	PISTION	174
E032	LEVER, LOCKER	176
E033	MOTER, STARTIONG	178
E034	PLUMBING, TURBO CHARGER	180
E035	TURBO CHARGER	182
E036	COVER, VALVE	184
E037	PUMP, WATER	186
E038	MANIFOLD, EXHAUST	188
E039	DPF	190
E040	CONNECTION, AIR INTAKE	192
F001	FRONT AXLE HOUSING	194
F002	FRONT DIFFERENTIAL GEAR	196
F003	FRONT GEAR CASE Ⅰ	198
F004	FRONT GEAR CASE Ⅱ	200
F005	FRONT GEAR CASEⅢ	202
F006-1	POWER STEERING CYLINDER	204
F006-2	POWER STEERING CYLINDER(2019.04~)	206
T001	MAIN DRIVE SHAFT ASS`Y	208
T002	MAIN DRIVEN SHAFT ASS`Y	210
T003	IDLE SHAFT ASS`Y	212
T004	MAIN SHIFT DRIVE SHAFT ASS`Y	214

GROUP NO	GROUP NAME	PAGE
T005	MAIN SHIFT DRIVEN SHAFT ASS`Y	216
T006-1	RANGE SHIFT DRIVE SHAFT	218
T006-2	RANGE SHIFT DRIVE SHAFT(2019.04~)	220
T007	RANGE SHIFT DRIVEN SHAFT ASS`Y	222
T008	FRONT DRIVE CONNECTING SHAFT ASS`Y	224
T009	FRONT DRIVE SHAFT ASS`Y	226
T010	FRONT DRIVE IDLE SHAFT ASS`Y	228
T011	PTO CONNECTING SHAFT ASS`Y)	230
T012	PTO CLUTCH SHAFT ASS`Y	232
T013	PTO DRIVE SHAFT ASS`Y	234
T014	PTO DRIVEN SHAFT ASS`Y	236
T015	DIFFERENTIAL ASS`Y	238
T016	REAR AXLE HOUSING ASS`Y	240
T017	HYDRAULIC CYLINDER CASE ASS`Y -AP	242
T018	MAIN SHIFT CASE ASS`Y	244
T019	RANGE SHIFT CASE ASS`Y	246
T020	HYDRAULIC CYLINDER ASS`Y	248
T021	MAIN SHIFT RELATION	250
T022	RANGE SHIFT RELATION	252
T023	DIFFERENTIAL SHIFT ASS`Y	254
T024	PTO SHIFT LEVER)	256
T025	CASE ASS'Y	258
T026	HYDRAULIC ASS`Y RELATION	260
T027	P-D LEVER ASS`Y RELATION	262
T028	POSITION, DRAFT CONTROL ROD RELATION	264

FIG C001 Branson 7845RP(US)	PTO & MAIN DAMPER	Year/Month 2020/02

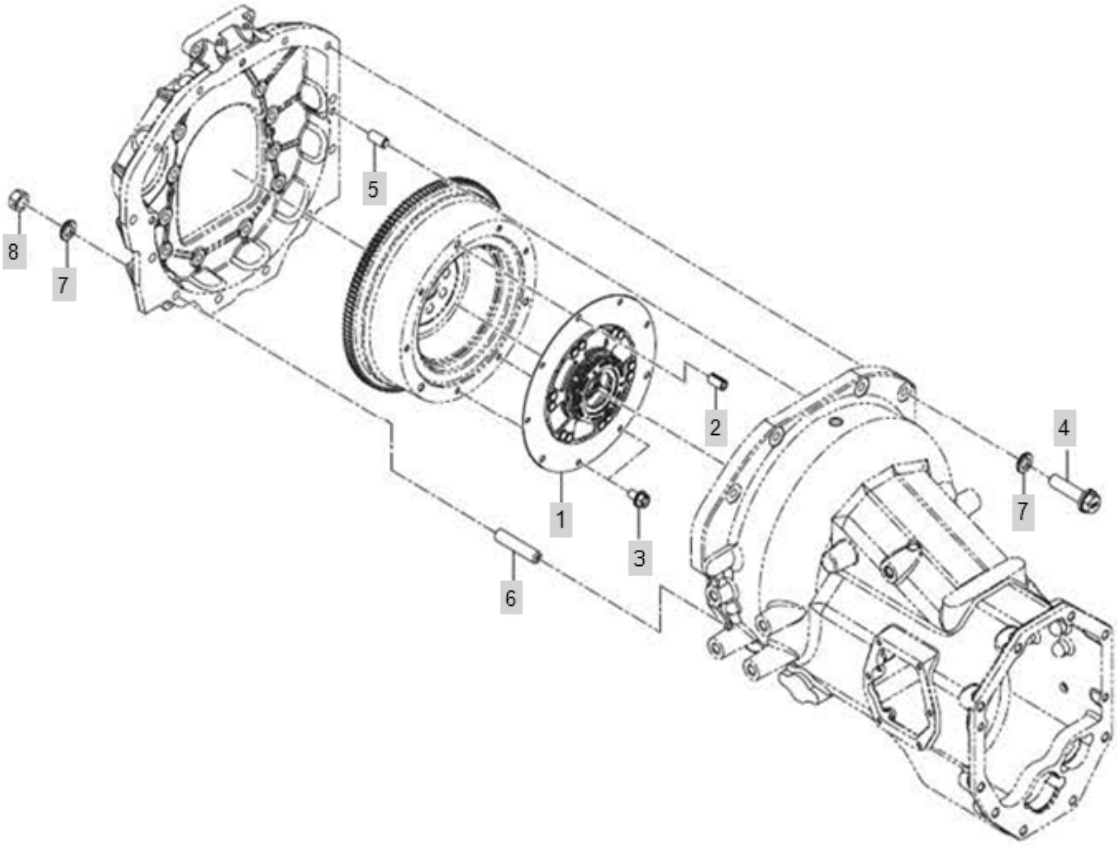

FIG C001 Branson 7845RP(US)	PTO & MAIN DAMPER	Year/Month 2020/02

KeyNo.	Part Number	Part Name	Quantity	Other
1	TA00034656A	MAIN DAMPER	1	
2	22351-100018	PIN, SPRING (10-18)	3	
3	26106-080142	SCREW,HEXFLANGEHEADCAP	6	
4	TZ04210000A3	BOLT	4	
5	22312-100200	PIN, DOWEL (10-20)	2	
6	TA00036967A	BRACKET	8	
7	22217-120000	WASHER, SPRING (Φ 12)	12	
8	FGE7110000A	HEXAGON NUT.	8	

FIG C002 Branson 7845RP(US)	MAIN PUMP	Year/Month 2020/02

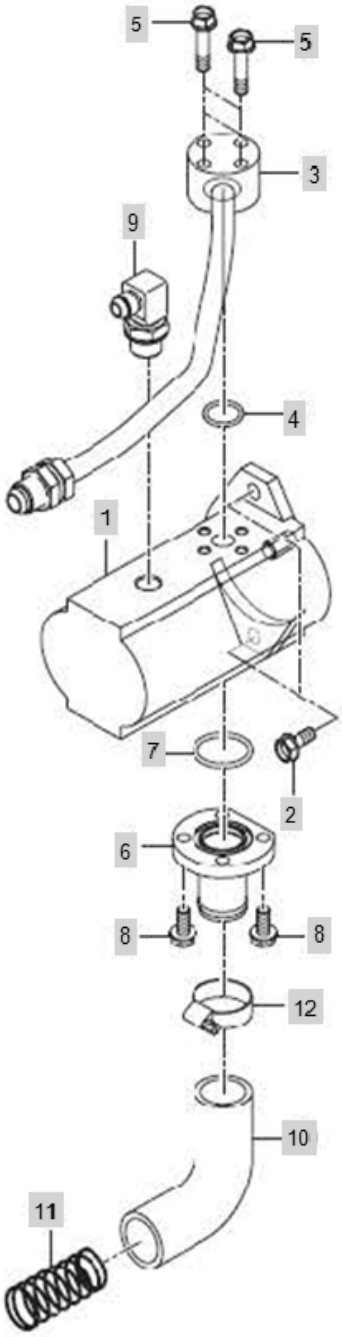

FIG C002 Branson 7845RP(US)	MAIN PUMP	Year/Month 2020/02

KeyNo.	Part Number	Part Name	Quantity	Other
1	TA00041864D	PUMP(12CCX20CC), HYDAULIC	1	
1-1	TA00037233A	PUMP (18CC*12CC)	1	deleted
2	26106-100252	SCREW,HEXFLANGEHEADCAP	2	
3	TA00054186A	HIGH PRESSURE FLANGE	1	
3-1	TA00038099A	MAINPLANGE	1	deleted
4	24311-000200	O-RING, DYNAMIC (Φ20)	1	
5	26106-080402	SCREW,HEXFLANGEHEADCAP	4	
6	TA00000895A	LOW_FLANG_ASSY_MAIN	1	
7	24321-000350	O-RING	1	
8	26106-080202	SQR FLANGE BOLT	4	
9	CEE4040000A4	ELBOW1/2-3/8	1	
10	FT80390000C4	HOSEC,LOWERPRESS.	1	
11	FTB4700000B4	SPRING	1	
12	23000-041000	HOSECLAMP	1	

FIG C003 Branson 7845RP(US)	PST VALVE	Year/Month 2020/02

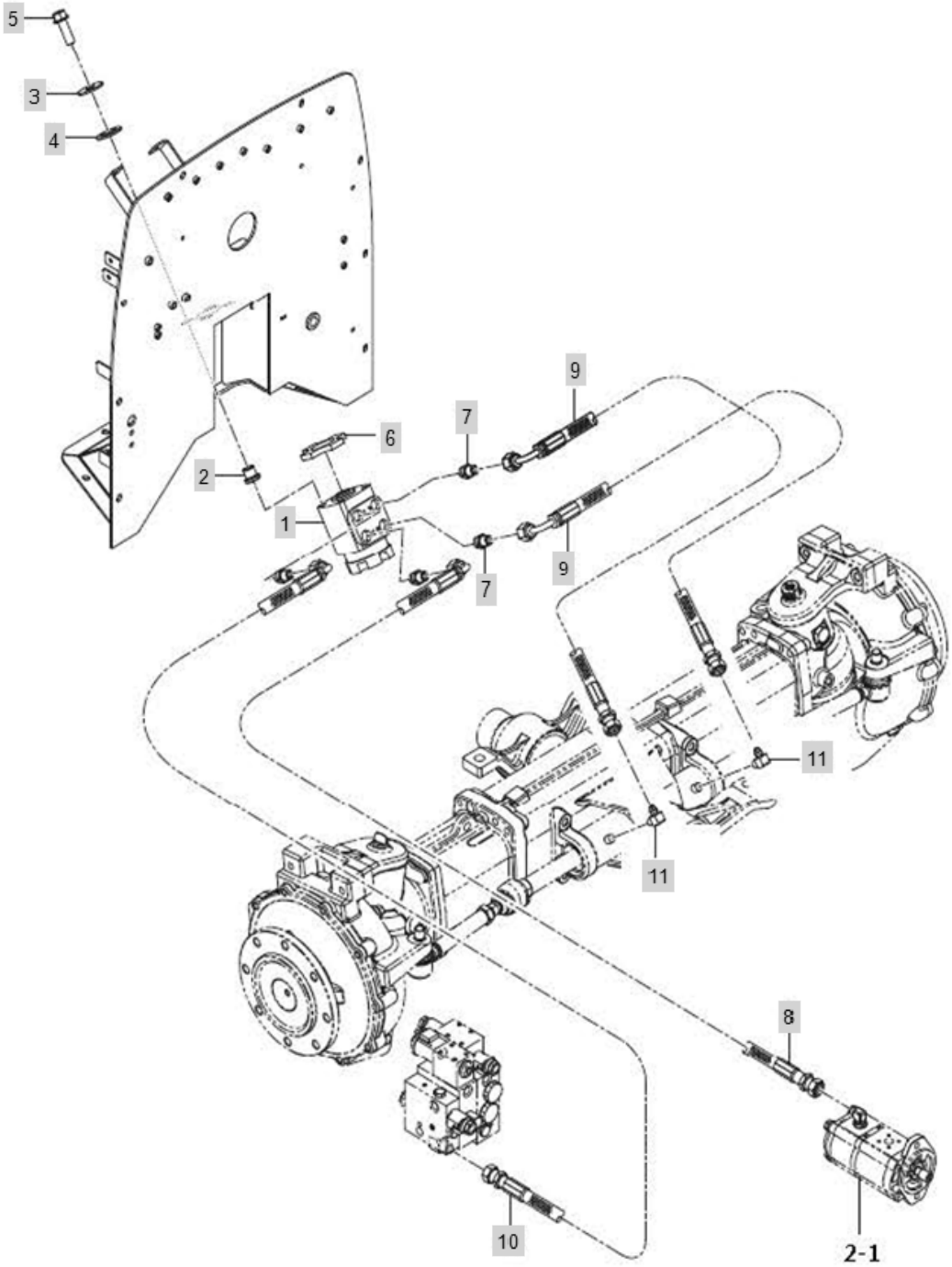

FIG C003 Branson 7845RP(US)	PST VALVE	Year/Month 2020/02

KeyNo.	Part Number	Part Name	Quantity	Other
1	TA00054182A	PSU	1	
1-1	TA00024252A	PS VALVE (8050)	1	deleted
2	TA00024238B	CUSHION RUBBER ASSY	4	
3	TA00024900A	PLAIN WASER	4	
4	22157-100000	WASHER, PLAIN (Φ 10)	4	
5	26106-100302	HEXFLANGEBOLT	4	
5-1	26136-100302	SCREW, HEX FLANGE HEAD CAP	4	deleted
6	TA00024241A	URETHANE	1	
7	TA00002734A	HOODBRACKETASSY	4	
8	TA00036989A	HYD. HOSE	1	
9	TA00036991A	HYD. HOSE	2	
10	TA00037529B	HYD.HOSE	1	
11	CA73020000A4	ELBLW90	2	

FIG C004 Branson 7845RP(US)	OIL COOLER	Year/Month 2020/02

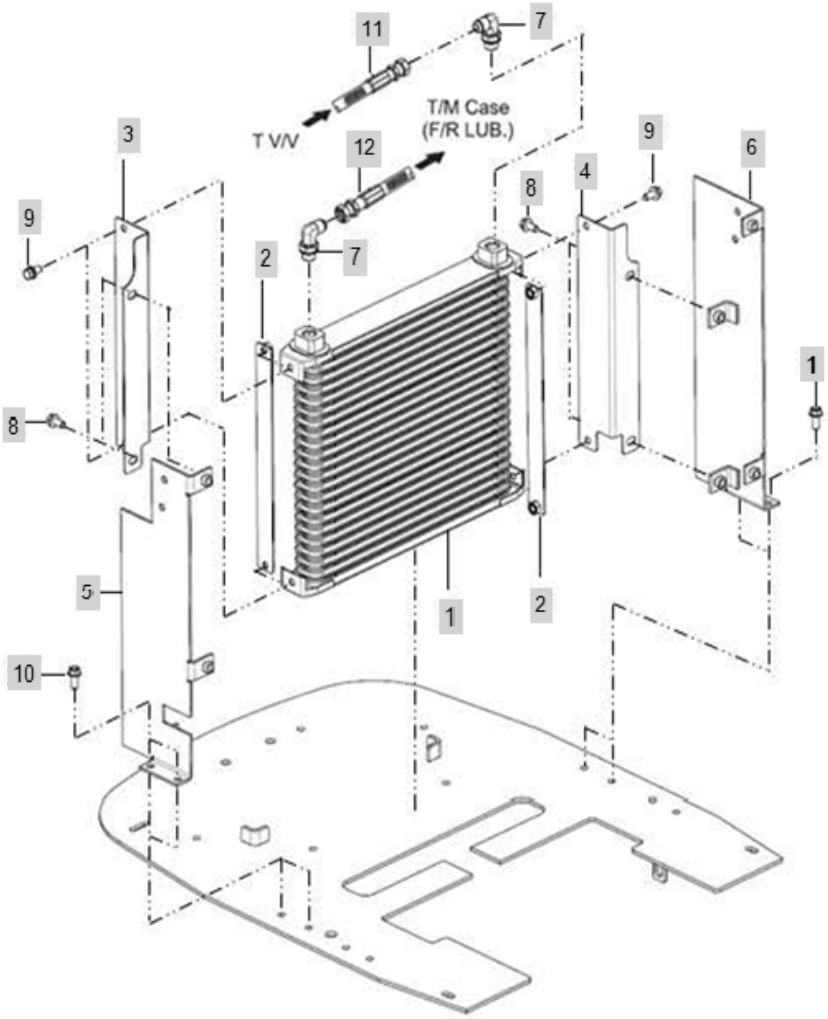

FIG C004 Branson 7845RP(US)	OIL COOLER	Year/Month 2020/02

KeyNo.	Part Number	Part Name	Quantity	Other
1	TA00037833A	OIL COOLER	1	
2	TA00037967A	SIDE BRACKET ASSY	2	
3	TA00037969B	BRACKET(L), COOLER	1	
4	TA00037970B	BRACKET(R), COOLER	1	
5	TA00035277C	BRACKET ASS'Y, CONDENSER(L)	1	
6	TA00035279C	BRACKET ASS'Y, CONDENSER(R)	1	
7	CEE4050000A4	ELBOW (3/8)	2	
8	26106-080162	SCREW,HEXFLANGEHEADCAP	4	
9	26016-080182		4	
10	26106-080202	SQR FLANGE BOLT	4	
11	TA00037530A	HYD.HOSE	1	
12	TA00036992A	HYD. HOSE	1	

FIG C005 Branson 7845RP(US)	HYDRAULIC FILTER	Year/Month 2020/02

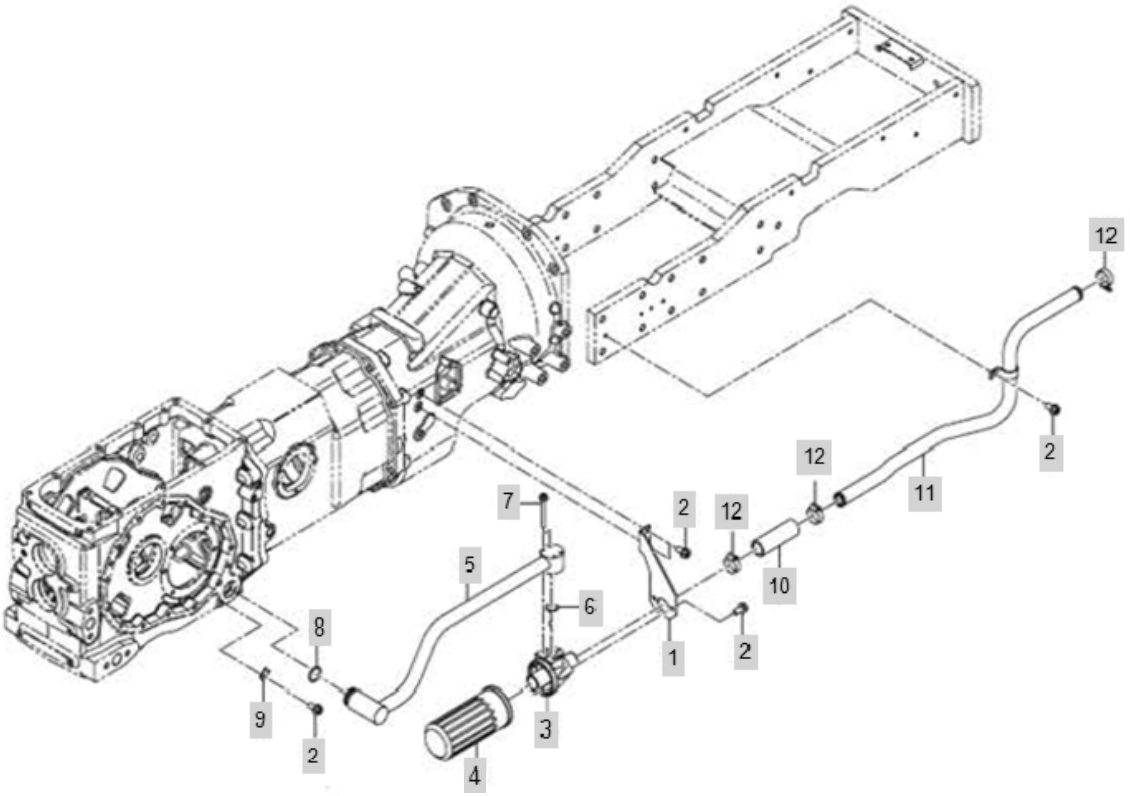

FIG C005 Branson 7845RP(US)	HYDRAULIC FILTER	Year/Month 2020/02

KeyNo.	Part Number	Part Name	Quantity	Other
1	TA00049990A	FILTER BRACKET	1	
1-1	TA00036160B	FILTER BRACKET	1	deleted
2	26106-080162	SCREW,HEXFLANGEHEADCAP	6	
3	TA00042010A	FILTER COVER	1	
4	FTB8030000C9	FILTER, HYDRAULIC OIL (30/40 SERIES)	1	
5	TA00049986A	FILTER_PIPE_A	1	
5-1	TA00042333A	PIPE, LOW PRESSURE(FRONT)	1	deleted
6	24321-000350	O-RING	1	
7	26106-060552	HEX FLANGE BOLT	4	
8	24311-000320	O-RING, DYNAMIC (Φ32)	1	
9	TTB4100000A4	PLATE	1	
10	FBB4330000A3	HOSE	1	
11	TA00049988A	FILTER_PIPE_B	1	
11-1	TA00037197B	PIPE ASS'Y, LOW PRESSURE(REAR)	1	deleted
12	23000-041000	HOSECLAMP	3	

FIG C006-1 Branson 7845RP(US)	SELECTING CONTROL V/V,JOY STICK	Year/Month 2020/02

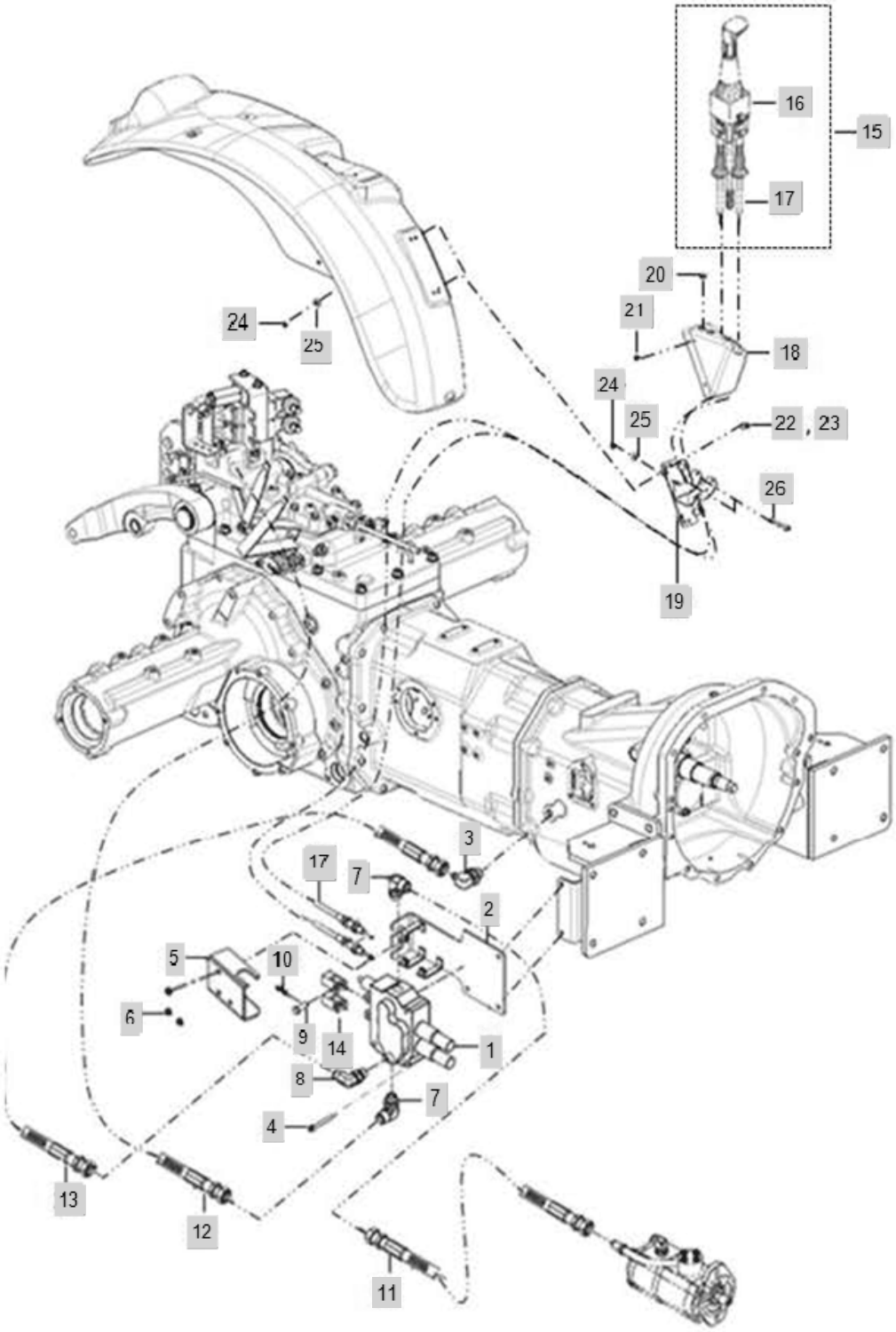

FIG C006-1 Branson 7845RP(US)	SELECTING CONTROL V/V,JOY STICK	Year/Month 2020/02

KeyNo.	Part Number	Part Name	Quantity	Other
1	TA00037577A	MID SCV	1	
2	TA00023725B	FRONT SCV BRAKET	1	
3	CEE4050000A4	ELBOW (3/8)	1	
4	26106-080702	SCREW,HEXFLANGEHEADCAP	2	
5	TA00023728C	SCV COVER, FRONT	1	
6	26367-060002	Nut, Hexa (Φ6)	3	
7	TA00026065A	ELBOW 90 3/8-1/2	2	
8	TA00022104B	ELBOW (M18XP1.5_PF3/8)	1	
9	TA00025719A	HEAD PIN(D9)	2	
10	RR64050000B4	PIN 8, COME-OFF SNAP	2	
11	TA00036984A	HYD. HOSE	1	
12	TA00036986A	HYD. HOSE	1	
13	TA00036985B	HYD. HOSE	1	
14	TA00025718B	CLEVIS	2	
15	TA00041497C	JOYSTIC ASS'Y(ROPS)	1	
16	TA00035126A	JOY-STICK	1	
17	TA00041498C	CABLE(ROPS), JOYSTIC	2	
18	TA00026232C	JOY-STICK COVE	1	
19	TA00026208C	JOY-STICK BRACKET ASS'Y	1	
20	TA00047320A	CAP, SWITCH	2	
21	TCE9010000B4	BOLT	4	
22	26106-080252	SCREW,HEXFLANGEHEADCAP	2	
23	26106-080202	SQR FLANGE BOLT	2	
24	26367-080002	HEX FLANGE NUT (Φ8)	6	
25	22157-080000	WASHER, PLAIN (Φ 08)	4	
26	26106-080852	SCREW,HEXFLANGEHEADCAP	2	

FIG C006-2 Branson 7845RP(US)	SELECTING CONTROL V/V,JOY STICK (2019.04~)	Year/Month 2020/02

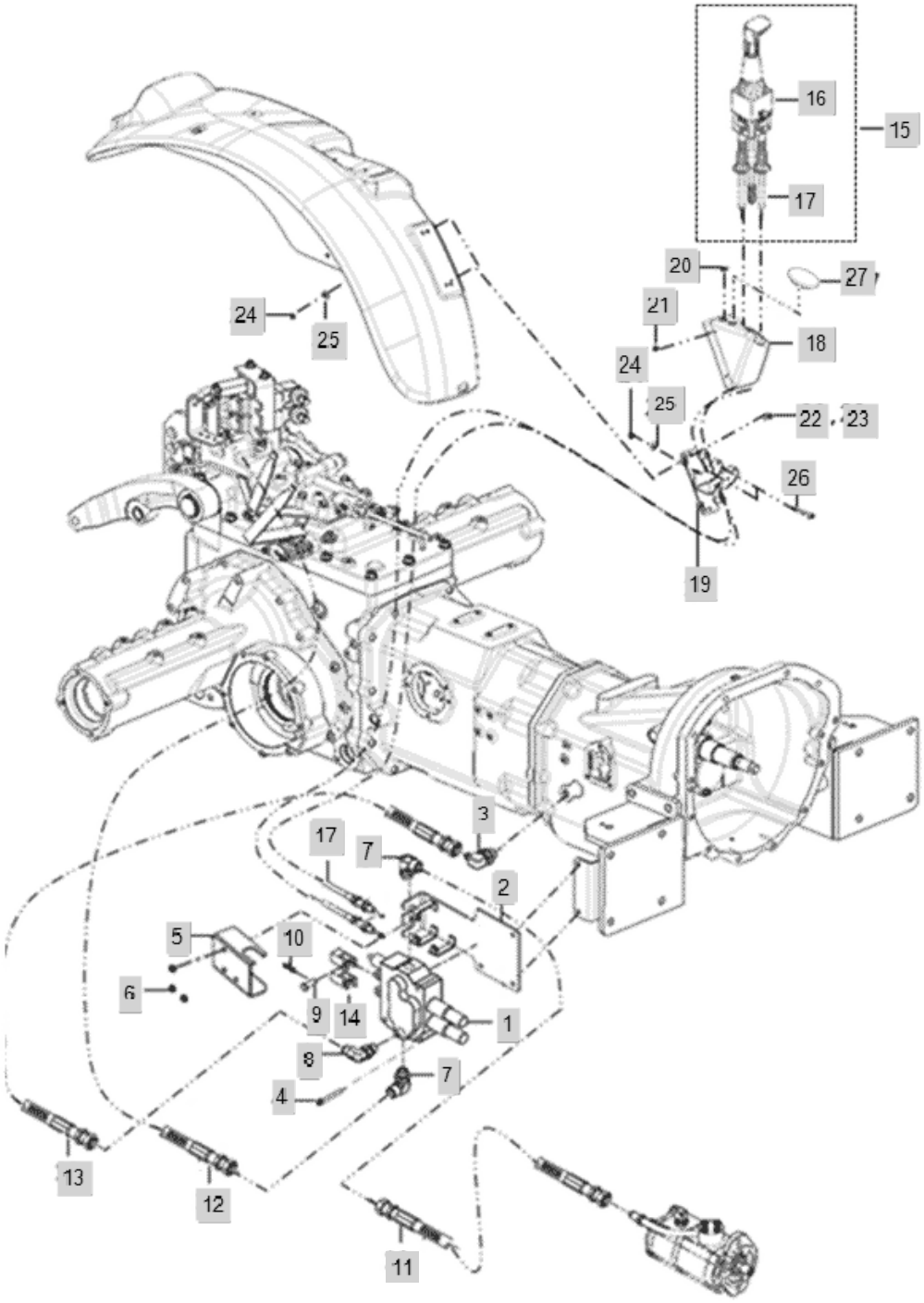

FIG C006-2 Branson 7845RP(US)	SELECTING CONTROL V/V,JOY STICK (2019.04~)	Year/Month 2020/02

KeyNo.	Part Number	Part Name	Quantity	Other
1	TA00037577A	MID SCV	1	
2	TA00023725B	FRONT SCV BRAKET	1	
3	CEE4050000A4	ELBOW (3/8)	1	
4	26106-080702	SCREW,HEXFLANGEHEADCAP	2	
5	TA00023728C	SCV COVER, FRONT	1	
6	26367-060002	Nut, Hexa (Φ6)	3	
7	TA00026065A	ELBOW 90 3/8-1/2	2	
8	TA00022104B	ELBOW (M18XP1.5_PF3/8)	1	
9	TA00025719A	HEAD PIN(D9)	2	
10	RR64050000B4	PIN 8, COME-OFF SNAP	2	
11	TA00036984A	HYD. HOSE	1	
12	TA00036986A	HYD. HOSE	1	
13	TA00036985B	HYD. HOSE	1	
14	TA00025718B	CLEVIS	2	
15	TA00041497C	JOYSTIC ASS'Y(ROPS)	1	
16	TA00035126A	JOY-STICK	1	
17	TA00041498C	CABLE(ROPS), JOYSTIC	2	
18	TA00026232C	JOY-STICK COVE	1	
19	TA00026208C	JOY-STICK BRACKET ASS'Y	1	
20	TA00047320A	CAP, SWITCH	2	
21	TCE9010000B4	BOLT	4	
22	26106-080252	SCREW,HEXFLANGEHEADCAP	2	
23	26106-080202	SQR FLANGE BOLT	2	
24	26367-080002	HEX FLANGE NUT (Φ8)	6	
25	22157-080000	WASHER, PLAIN (Φ 08)	4	
26	26106-080852	SCREW,HEXFLANGEHEADCAP	2	
27	TA00042481A	PLUG,RUBBER	1	

FIG C007 Branson 7845RP(US)	LIFT CYLINDER	Year/Month 2020/02

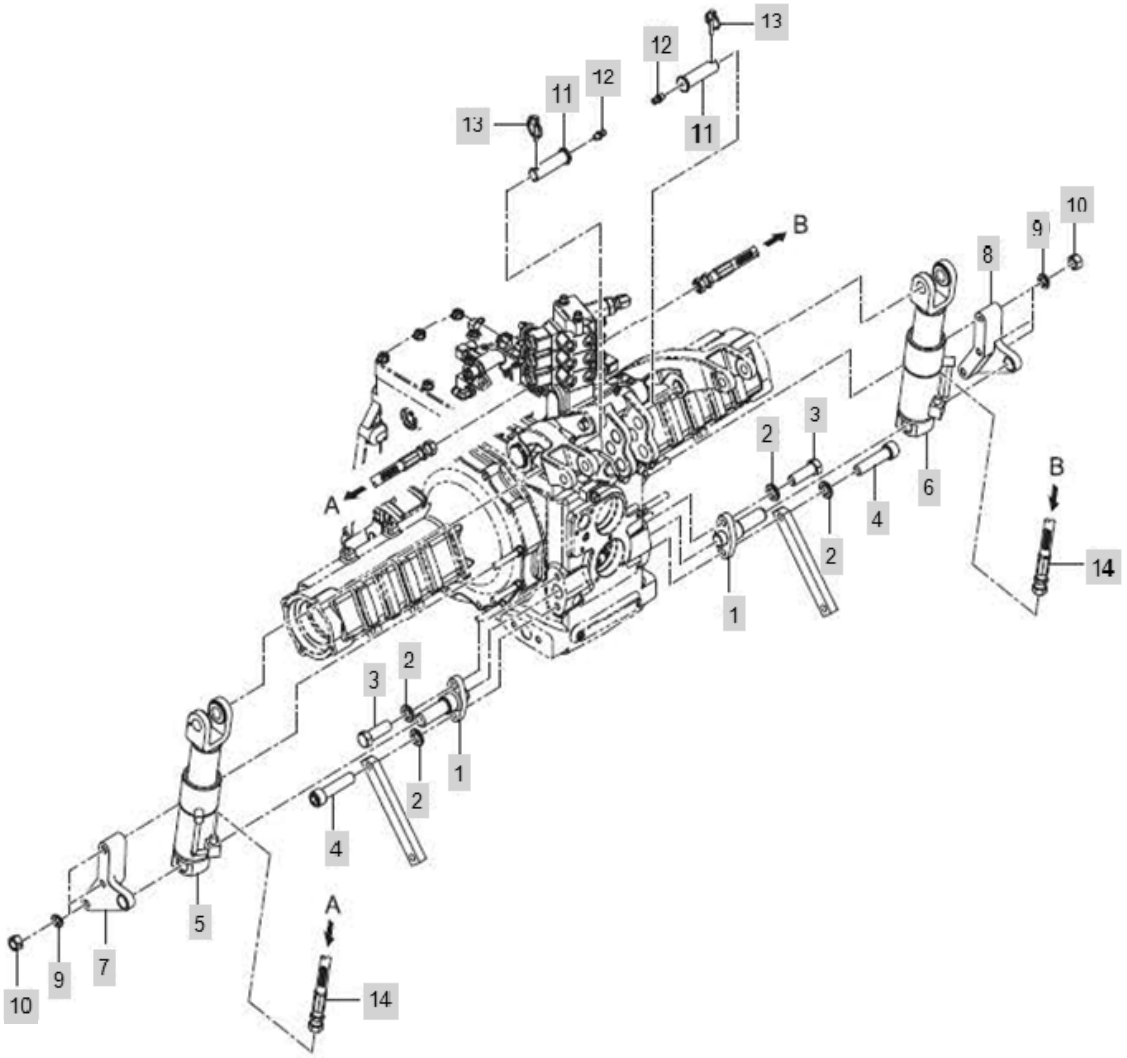

FIG C007 Branson 7845RP(US)	LIFT CYLINDER	Year/Month 2020/02

KeyNo.	Part Number	Part Name	Quantity	Other
1	TA00036148D	PIN	2	
2	22217-140000	WASHER, SPRING (Φ 14)	4	
3	FT08110000A4	BOLT(M14X42)	2	
4	TA00039143A	HEXAGON SOCKET HEAD CAP SCREWS (M14)	2	
5	TA00038030C	CYLINDER A'SSY LH, LIFT	1	
6	TA00028039E	LIFT CYLINDER ASSY	1	
7	TA00040167A	CYLINDER SUPPORT(L)	1	
8	TA00040168A	CYLINDER SUPPORT(R)	1	
9	22217-120000	WASHER, SPRING (Φ 12)	6	
10	FT36100000A4	HEXAGON NUT	6	
11	TA00036352D	PIN	2	
12	TA27160000A4	GREASE NIPPLE	2	
13	TJ30110000A4	RING PIN	2	
14	TA00040420A	HYD' HOSE	2	

FIG C008 Branson 7845RP(US)	BRAKE ROD	Year/Month 2020/02

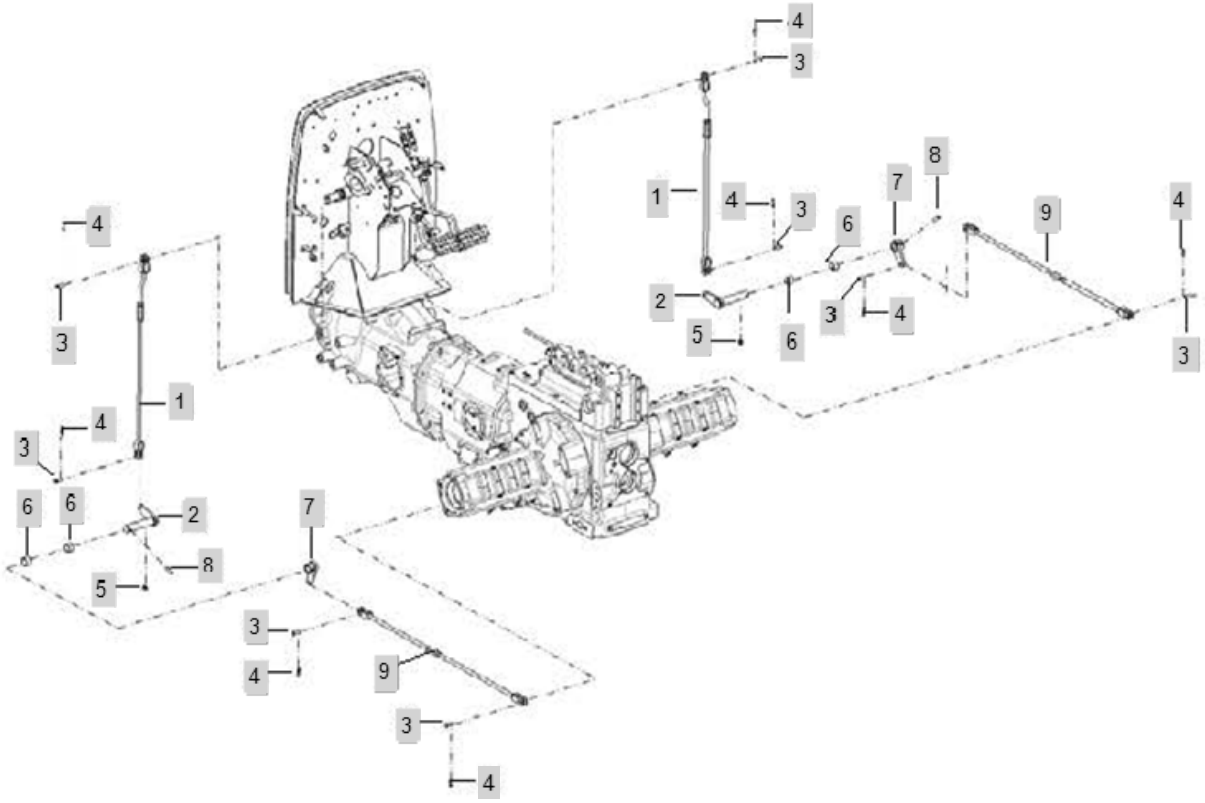

FIG C008 Branson 7845RP(US)	BRAKE ROD	Year/Month 2020/02

KeyNo.	Part Number	Part Name	Quantity	Other
1	TA00035211B	BRAKE ROD ASS'Y	2	
2	TA00037379A	CAM SHAFT ASSY	2	
3	TT41090000A4	PIN10X23	6	
4	RR51230000C	SNAP PIN	8	
5	TA27160000A4	GREASE NIPPLE	2	
6	24550-025200	BUSH,DRY	4	
7	TA00037382A	CAM ASSY	2	
8	22351-100032		2	
9	TA00041625A	ROD ASS'Y, BRAKE	2	

FIG C009 Branson 7845RP(US)	BRAKE PEDAL	Year/Month 2020/02

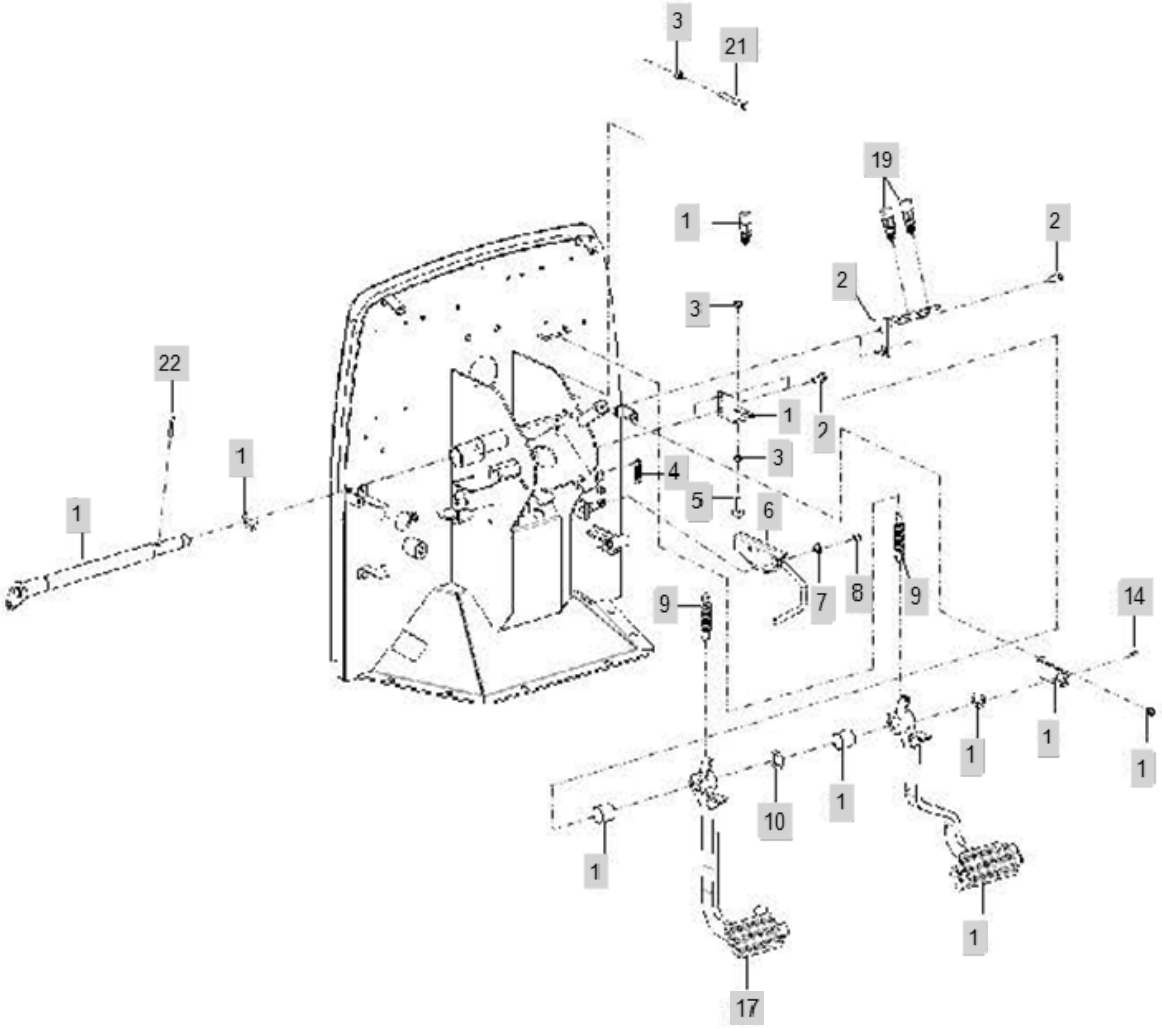

FIG C009 Branson 7845RP(US)	BRAKE PEDAL	Year/Month 2020/02

KeyNo.	Part Number	Part Name	Quantity	Other
1	TA00036135A	BRACKET	1	
2	26106-080202	SQR FLANGE BOLT	4	
3	26716-080002	NUT,HEX (D8)	4	
4	CFJ7080000A4	SPRING	1	
5	RA00002057A	RUBBER ASSY, STOPPER	1	
6	TA00036554D	PARKING LAVER ASS'Y	1	
7	22117-120000	WASHER, PLAIN (Φ 12)	1	
8	22272-000100	RING, CIRCLIP (Φ 10)	2	
9	TC73090000A4	RETURN SPRING	2	
10	22117-200000	WASHER	1	
11	24550-026300	BUSH, DRY	2	
12	22272-000190	RING, CIRCLIP (Φ 19)	2	
13	TA00040708A	BRACKET	1	
14	TA27160000A4	GREASE NIPPLE	1	
15	26106-060182	Bolt, Hexa (6-18)	2	
16	TA00035682C	BREAK PEDAL(R)	1	
17	TA00035681D	BREAK PEDAL(L)	1	
18	TA00035669B	PEDAL SHAFT ASS'Y	1	
19	TZC5110000A3	STOPLAMPSWITCH	3	
20	FTC5390000A3	SWITCH BRACKRT(BREAK)	1	
21	26116-080704	BOLT	2	
22	22351-060040	PIN, SPRING (6-40)	1	

FIG C010 Branson 7845RP(US)	RADIATOR	Year/Month 2020/02

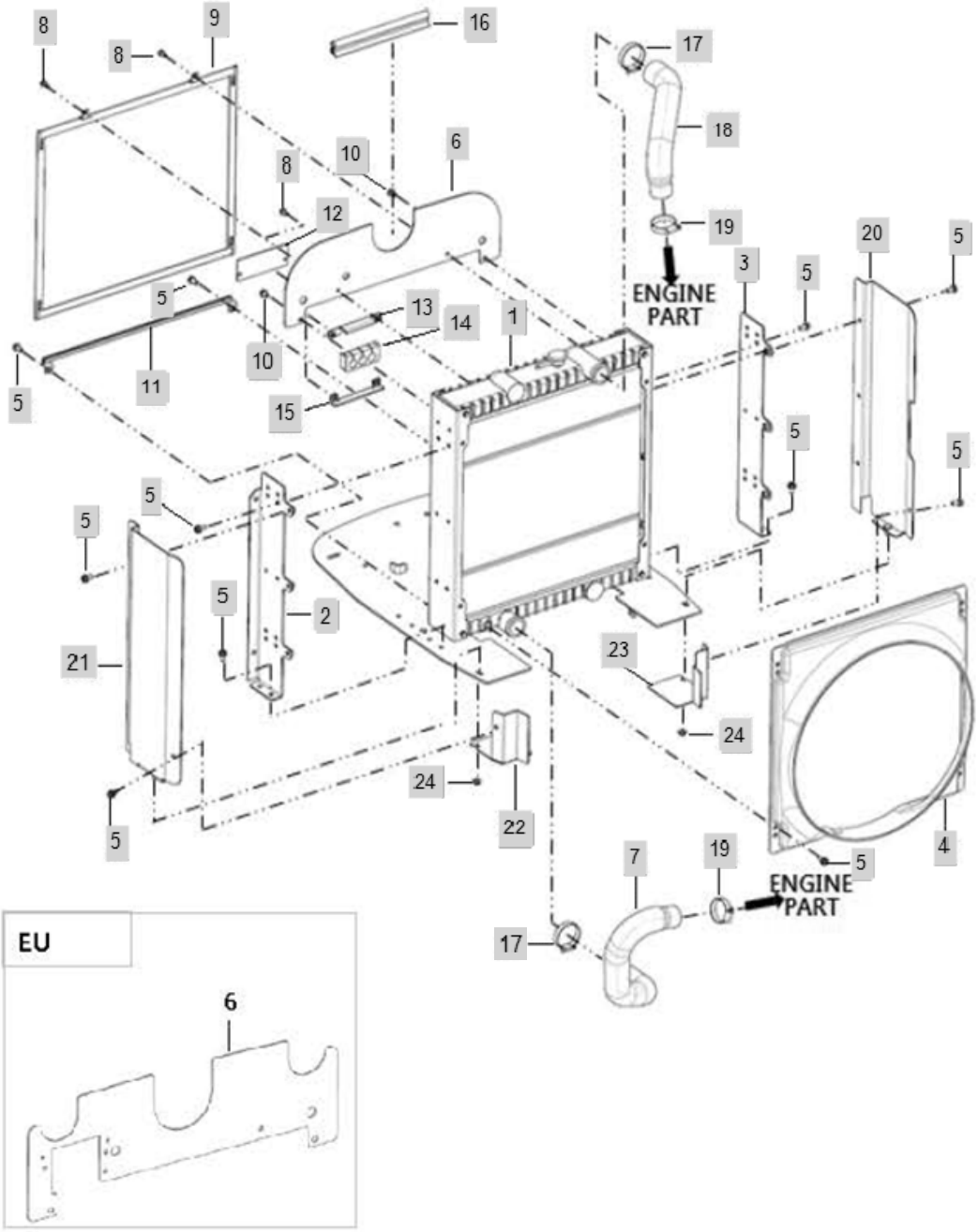

FIG C010 Branson 7845RP(US)	RADIATOR	Year/Month 2020/02

KeyNo.	Part Number	Part Name	Quantity	Other
1	TA00016278A	RADIATOR (8050)	1	
2	TA00035619B	BRACKET ASS'Y, RADIATOR(L)	1	
3	TA00035617B	BRACKET ASS'Y, RADIATOR(R)	1	
4	TA00037748A	SHROUD	1	
5	26106-080162	SCREW,HEXFLANGEHEADCAP	24	
6	TA00040679B	PLATE	1	
7	TA00037778A	WATERHOSE_B	1	
8	26106-060142	BOLT	4	
9	TA00036888A	SCREEN ASSY	1	
10	26106-080122	Bolt, Hexa (8-12)	2	
11	TA00036887B	SCREEN BRACKET ASSY	1	
13	TA00031544A	BRACKET	1	
14	TA00002725A	SEAL	1	
15	TA00030219A	BRACKET	1	
16	TA00038597A	STRIP B	1	
17	23000-060000	HOSECLAMP60	2	
18	TA00037777A	WATERHOSE_A	1	
19	23000-054000	HOSECLAMP54	2	
20	TA00029190B	BRACKET ASSY	1	
21	TA00029189B	BRACKET ASSY	1	
22	TA00038084A	COVERLH	1	
23	TA00038085A	COVERRH	1	
24	26367-080002	HEX FLANGE NUT (Φ8)	2	

FIG C011 Branson 7845RP(US)	COOLING WATER SUB-TANK	Year/Month 2020/02

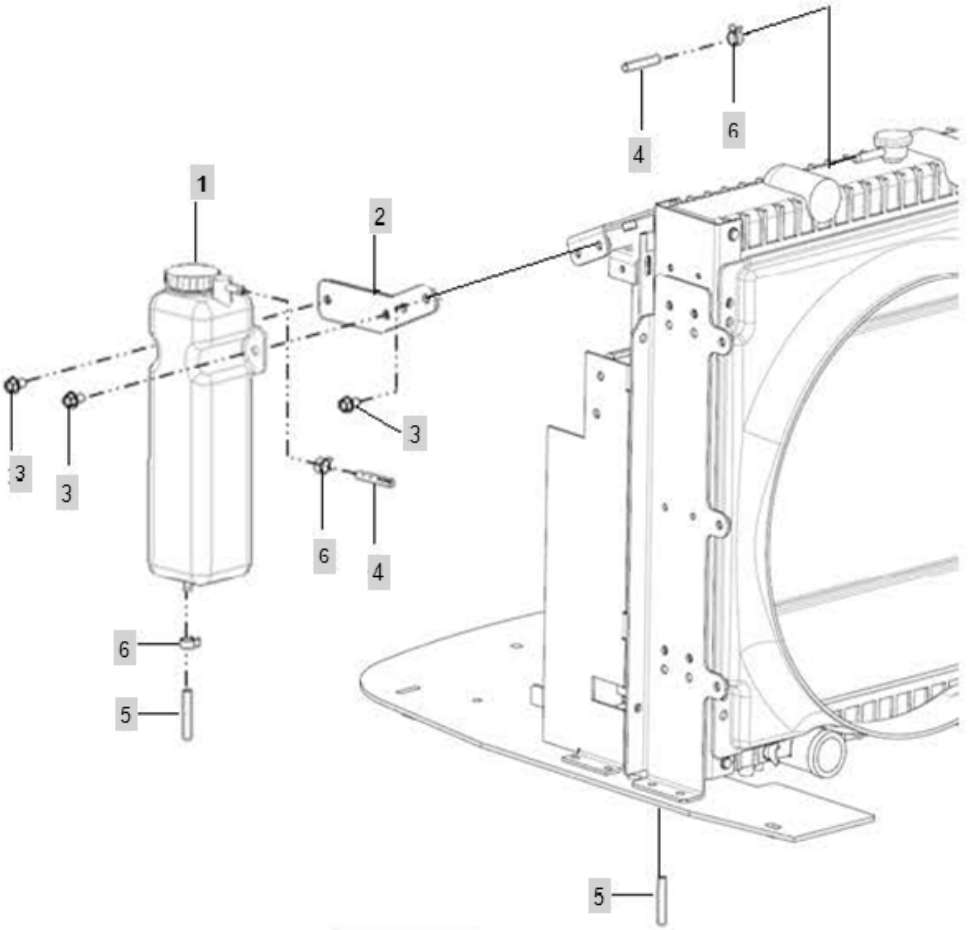

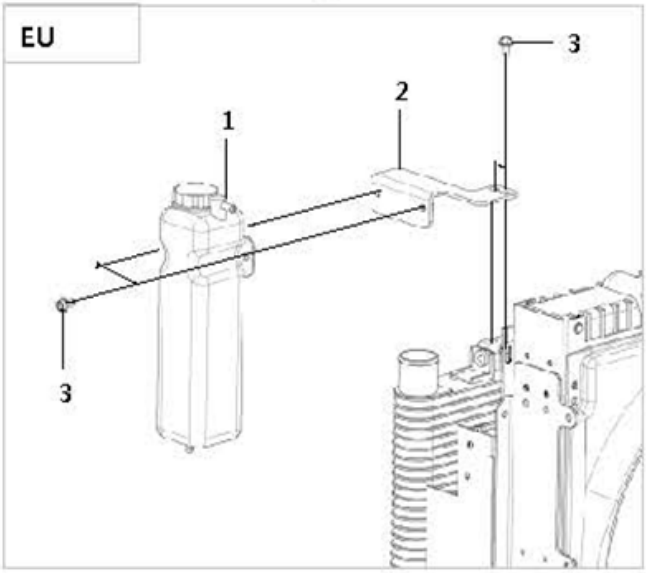

FIG C011 Branson 7845RP(US)	COOLING WATER SUB-TANK	Year/Month 2020/02

KeyNo.	Part Number	Part Name	Quantity	Other
1	TA00021310A	SUB_TANK,COOLING WATER	1	
2	TA00040866B	BRACKET, COOLING-WATER SUB-TANK	1	
3	26106-080162	SCREW,HEXFLANGEHEADCAP	4	
4	23980-730800	HOSE(AIR BREATHER)	1	
5	23980-730950	FLOATHOSE	1	
6	23080-013000	Clamp, Hose (Φ13)	3	

FIG C012 Branson 7845RP(US)	FRONT AXLE BRACKET	Year/Month 2020/02

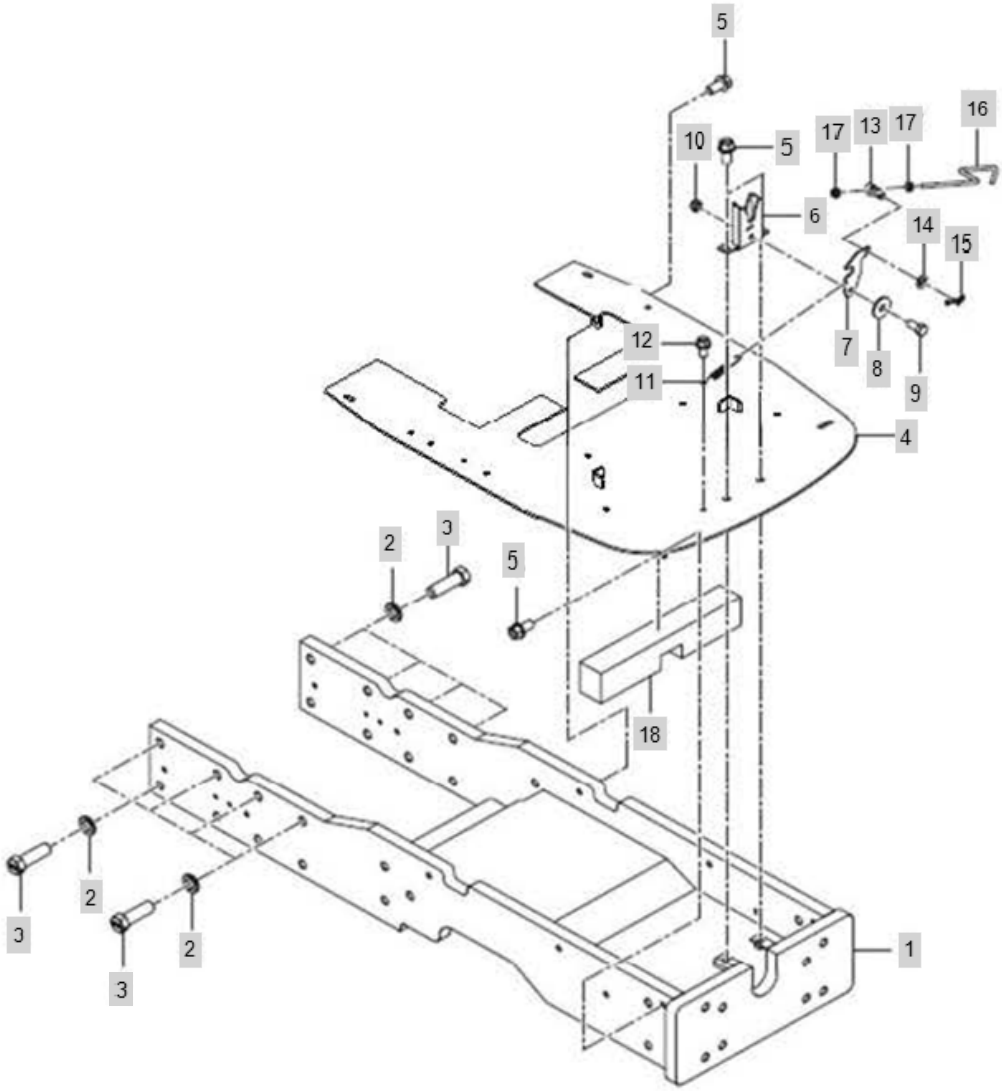

FIG C012 Branson 7845RP(US)	FRONT AXLE BRACKET	Year/Month 2020/02

KeyNo.	Part Number	Part Name	Quantity	Other
1	TA00037623D	FRONT AXLE BRACKET ASSY	1	
2	22217-140000	WASHER, SPRING (Φ 14)	16	
3	FT08090000A4	BOLT (M14X45)	16	
4	TA00037630B	PLATE ASSY	1	
5	26106-100202	HEX BOLT, (10-20)	8	
6	TA00029712B	BODY	1	
7	TA00029717A	LOCK	1	
8	22151-080000	WASHER, PLAIN (Φ 08)	1	
9	26116-080182	CAPSCREW(19M7139)	1	
10	26347-080002	Unut	1	
11	TA00032837B	SPRING	1	
12	26106-080162	SCREW,HEXFLANGEHEADCAP	1	
13	FE04180000A	CONNECTOR	1	
14	22117-080000	WASHER, PLAIN (Φ 08)	1	
15	RR64050000B4	PIN 8, COME-OFF SNAP	1	
16	TA00032840B	ROD	1	
17	26347-060002	NUT6	2	
18	TA00036880C	URETHANE	1	

FIG C013 Branson 7845RP(US)	FRONT AXLE SUPPORT	Year/Month 2020/02

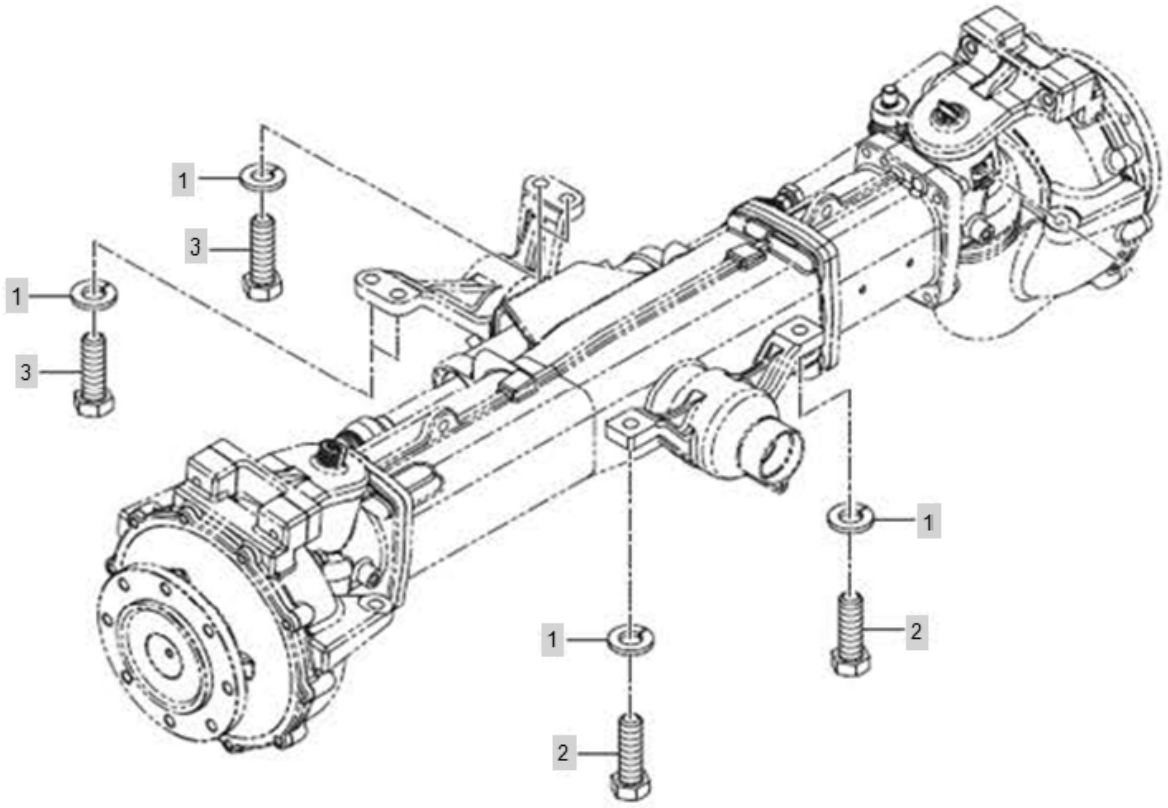

FIG C013 Branson 7845RP(US)	FRONT AXLE SUPPORT	Year/Month 2020/02

KeyNo.	Part Number	Part Name	Quantity	Other
1	TT09110000A4	LOCKSPRINGWASHER	6	
2	TT09090000A4	Bolt	2	
3	FT09090000A4	BOLT	4	

FIG C014-1 Branson 7845RP(US)	PROPELLER SHAFT	Year/Month 2020/02

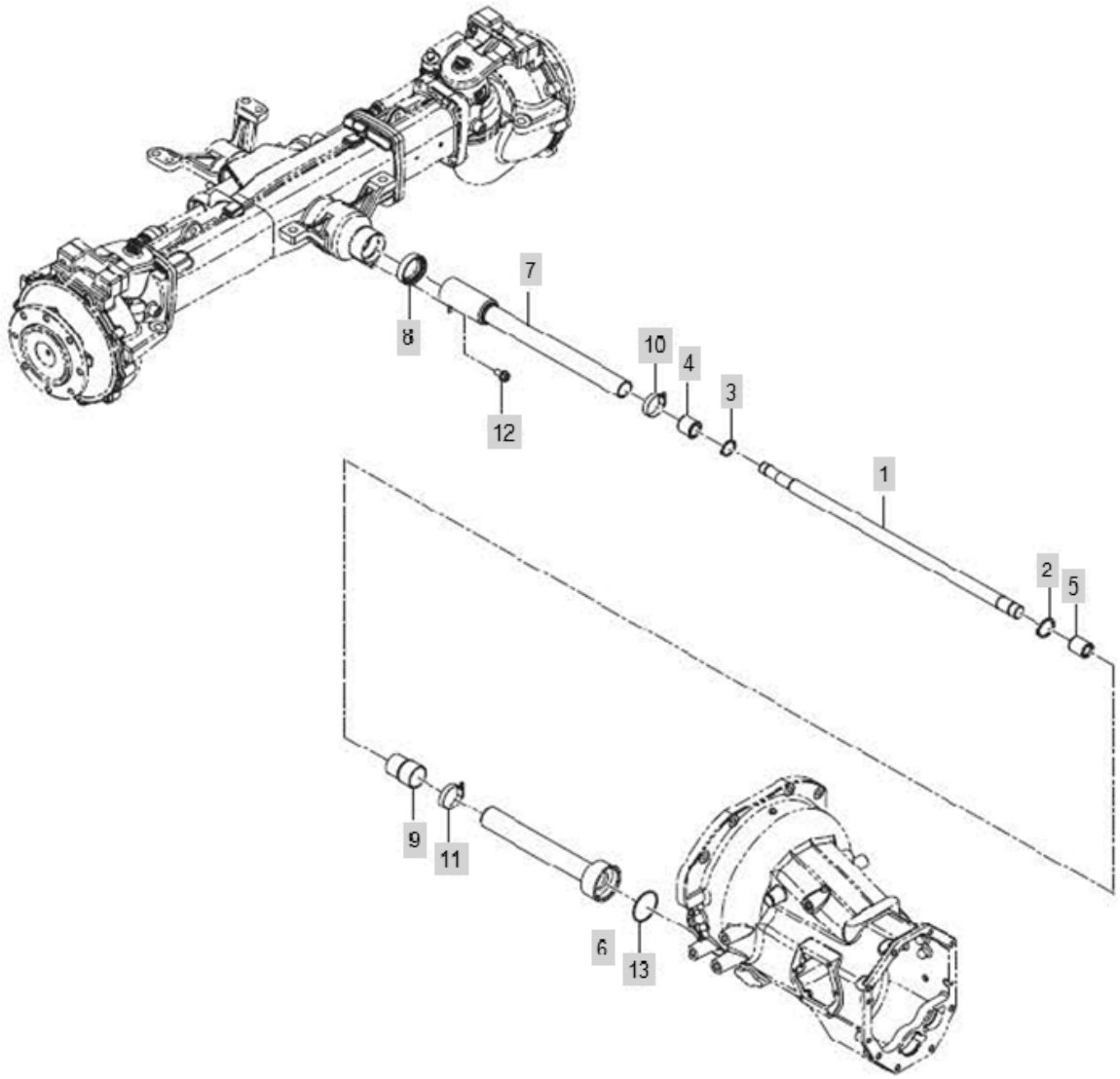

FIG C014-1 Branson 7845RP(US)	PROPELLER SHAFT	Year/Month 2020/02

KeyNo.	Part Number	Part Name	Quantity	Other
1	TA00034680A	SHAFT	1	
2	22242-000300	SNAP RING, SHAFT (Φ 30)	1	
3	22242-000250	SNAP RING, SHAFT (Φ 25)	1	
4	TA00033565A	COUPLING, SHUTTLE	1	
5	TA00002948A	PTO COUPLING	1	
6	TA00035315A	COVER ASS'Y	1	
7	TA00035316A	COVER ASS'Y	1	
8	TT23050000A4	SEAL, SHAFT COVER	1	
9	TT23040000A4	BOOTS,SHAFTCOVER	1	
10	23000-054000	HOSECLAMP54	1	
11	23000-060000	HOSECLAMP60	1	
12	26106-080162	SCREW,HEXFLANGEHEADCAP	1	
13	24321-000700	O-RING1AG-70	1	

FIG C014-2 Branson 7845RP(US)	PROPELLER SHAFT(2019.04~)	Year/Month 2020/02

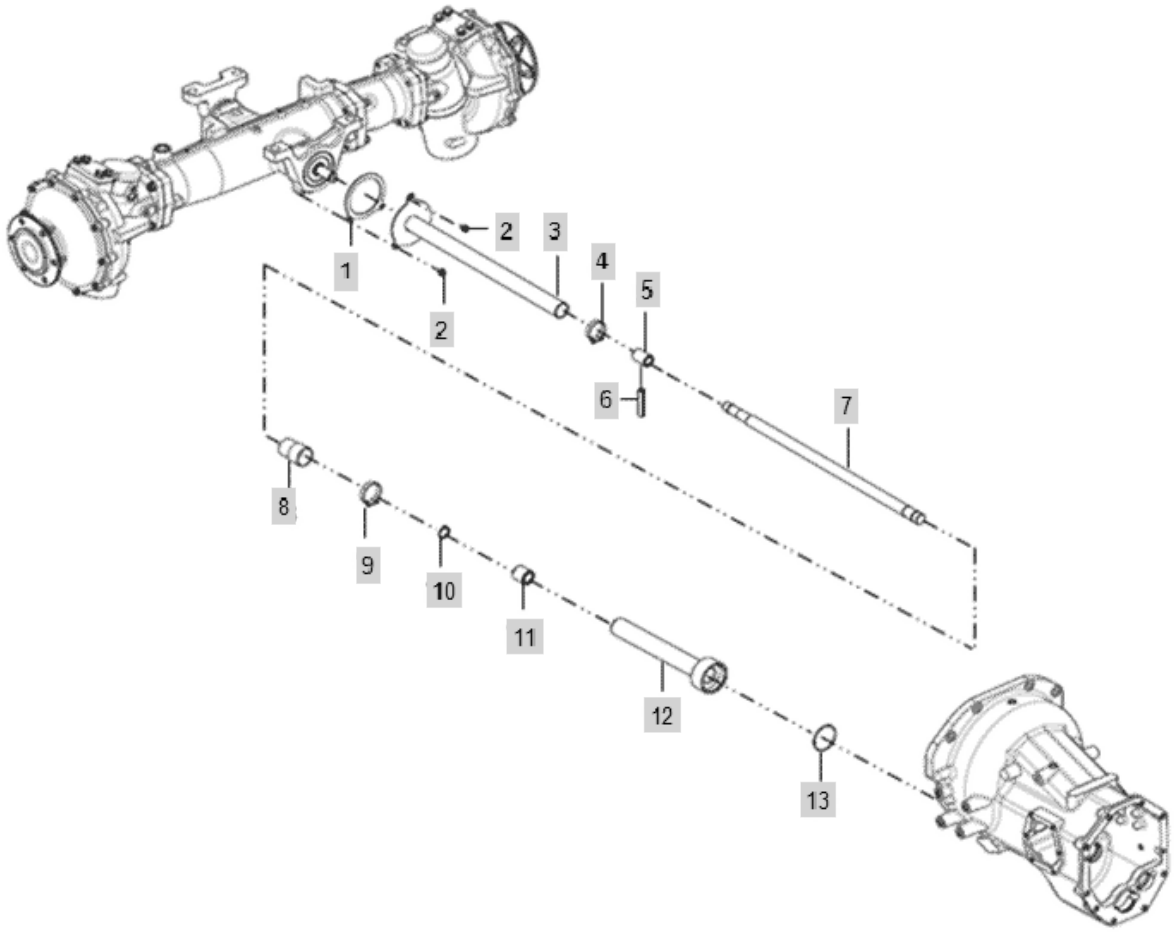

FIG C014-2 Branson 7845RP(US)	PROPELLER SHAFT(2019.04~)	Year/Month 2020/02

KeyNo.	Part Number	Part Name	Quantity	Other
1	TA00049148A	BRACKET	1	
2	26106-080162	SCREW,HEXFLANGEHEADCAP	3	
3	TA00049141A	COVER ASS'Y	1	
4	23000-054000	HOSECLAMP54	1	
5	TA00049188B	COUPLING	1	
6	22351-060032	PIN, SPRING (6-32)	1	
7	TA00049150B	SHAFT, PROPELLER	1	
8	TT23040000A4	BOOTS,SHAFTCOVER	1	
9	23000-060000	HOSECLAMP60	1	
10	22242-000300	SNAP RING, SHAFT (Φ 30)	1	
11	TA00033565A	COUPLING, SHUTTLE	1	
12	TA00035315A	COVER ASS'Y	1	
13	24321-000700	O-RING1AG-70	1	

FIG C015 Branson 7845RP(US)	AIR CLEANER	Year/Month 2020/02

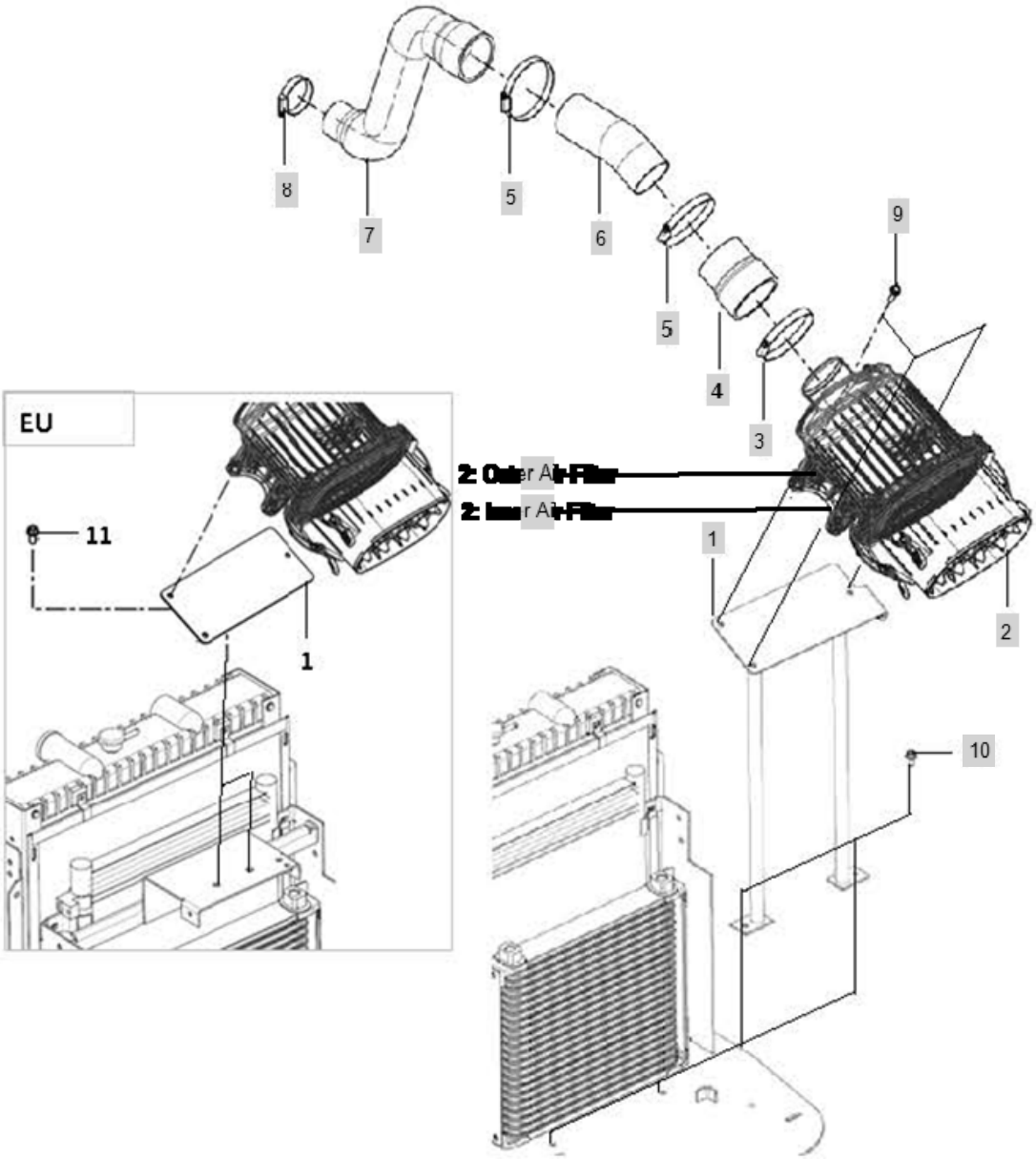

FIG C015 Branson 7845RP(US)	AIR CLEANER	Year/Month 2020/02

KeyNo.	Part Number	Part Name	Quantity	Other
1	TA00040862A	AIR-CLEANER BRACKET	1	
2	TA00037666A	AIR CLEANER ASSY K78	1	
3	23000-102000	CLIP,HOSE	1	
4	TA00037400A	INTAKE HOSE	1	
5	23000-090000	CLIP,HOSE	2	
6	TA00037652A	PIPE	1	
7	TA00037401A	INTAKE HOSE	1	
8	23000-060000	HOSECLAMP60	1	
9	26106-080252	SCREW,HEXFLANGEHEADCAP	3	
10	26106-080162	SCREW,HEXFLANGEHEADCAP	2	
2: Outer Air Filter	TA00038006A	FILTER ELEMENT	1	
2: Inner Air Filter	TA00038007A	2ND ELEMENT	1	

FIG C016 Branson 7845RP(US)	INTERCOOLER	Year/Month 2020/02

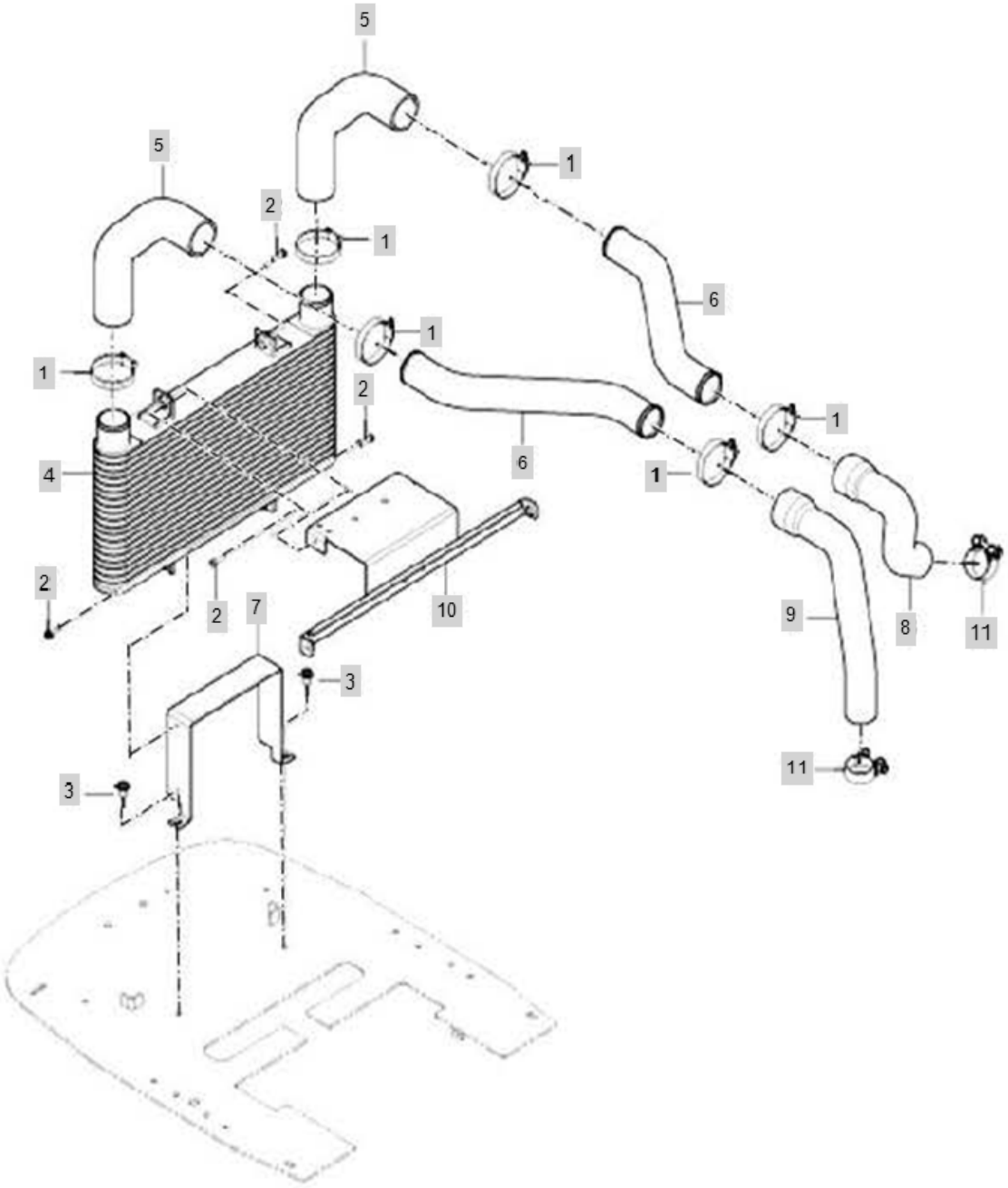

FIG C016 Branson 7845RP(US)	INTERCOOLER	Year/Month 2020/02

KeyNo.	Part Number	Part Name	Quantity	Other
1	23000-070000	CLAMP,HOSE	0	
2	26106-060252	Screw, (6-25)	0	
3	26106-080162	SCREW,HEXFLANGEHEADCAP	0	
4	EA00002639A	INTERCOOLER	0	
5	TA00029221A	INTERCOOLER HOSE(FRONT)	0	
6	TA00029222A	INTERCOOLER PIPE	0	
7	TA00029227B	BRACKET		
8	TA00037402A	INTERCOOLER HOSE	0	
9	TA00037403A	INTERCOOLER HOSE	0	
10	TA00037647B	BRACKET ASS'Y, SUPPORT		
11	EA00003864A	CLAMP, HOSE	0	

FIG C017 Branson 7845RP(US)	BATTERY	Year/Month 2020/02

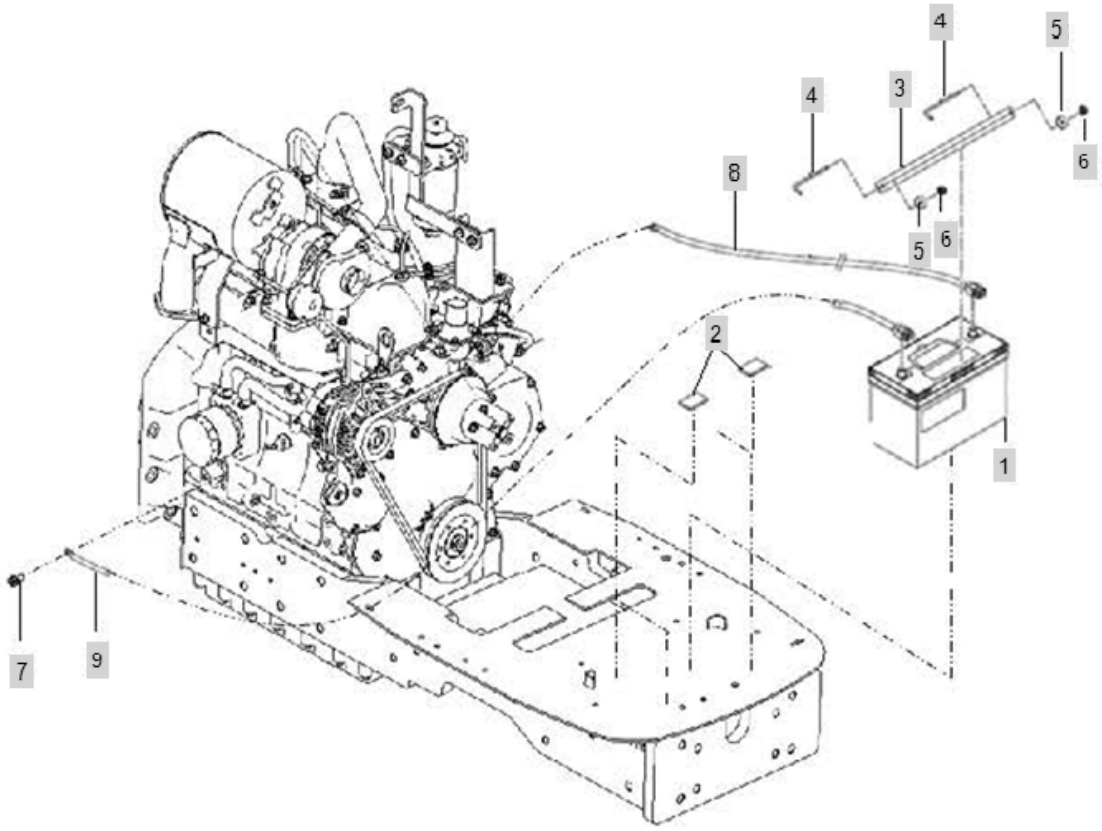

FIG C017 Branson 7845RP(US)	BATTERY	Year/Month 2020/02

KeyNo.	Part Number	Part Name	Quantity	Other
1	HA00000208A	BATTERY	1	
2	TA00016525A	CUSHION RUBBER	6	
3	TA00038228A	BRACKET	1	
4	TA00038337A	ROD	2	
5	22157-060000	WASHER, PLAIN (Φ 06)	2	
6	26366-060002	Nut, Hexa (Φ6)	2	
7	26106-100202	HEX BOLT, (10-20)	1	
8	HA00001035A	+CABLE	1	
9	HA00000136C	(-)Cable	1	

FIG C018 Branson 7845RP(US)	COOLING FAN	Year/Month 2020/02

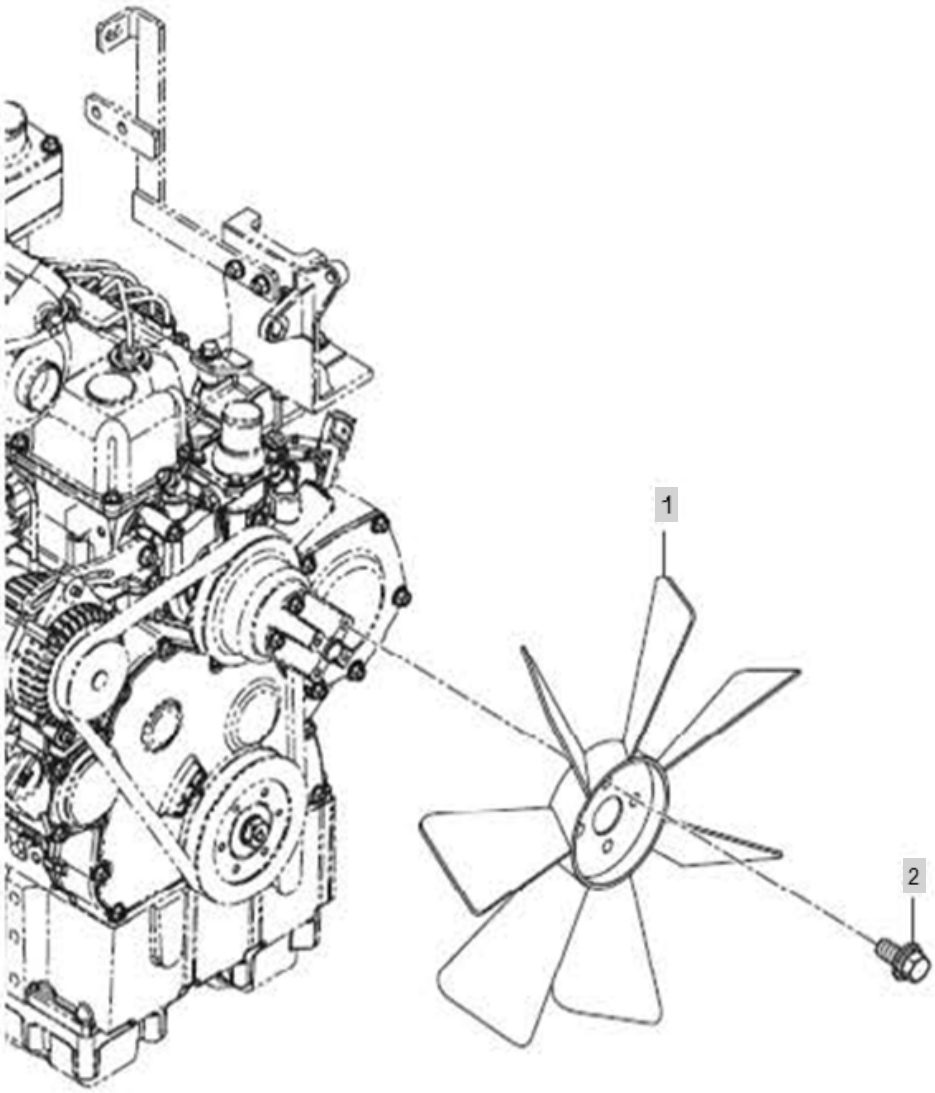

FIG C018 Branson 7845RP(US)	COOLING FAN	Year/Month 2020/02

KeyNo.	Part Number	Part Name	Quantity	Other
1	EA00002079A	COOLING FAN (D457.2)	1	
2	26014-080202	Bolt, Hexa (8-20)	4	

FIG C019 Branson 7845RP(US)	FUEL TANK ASS`Y	Year/Month 2020/02

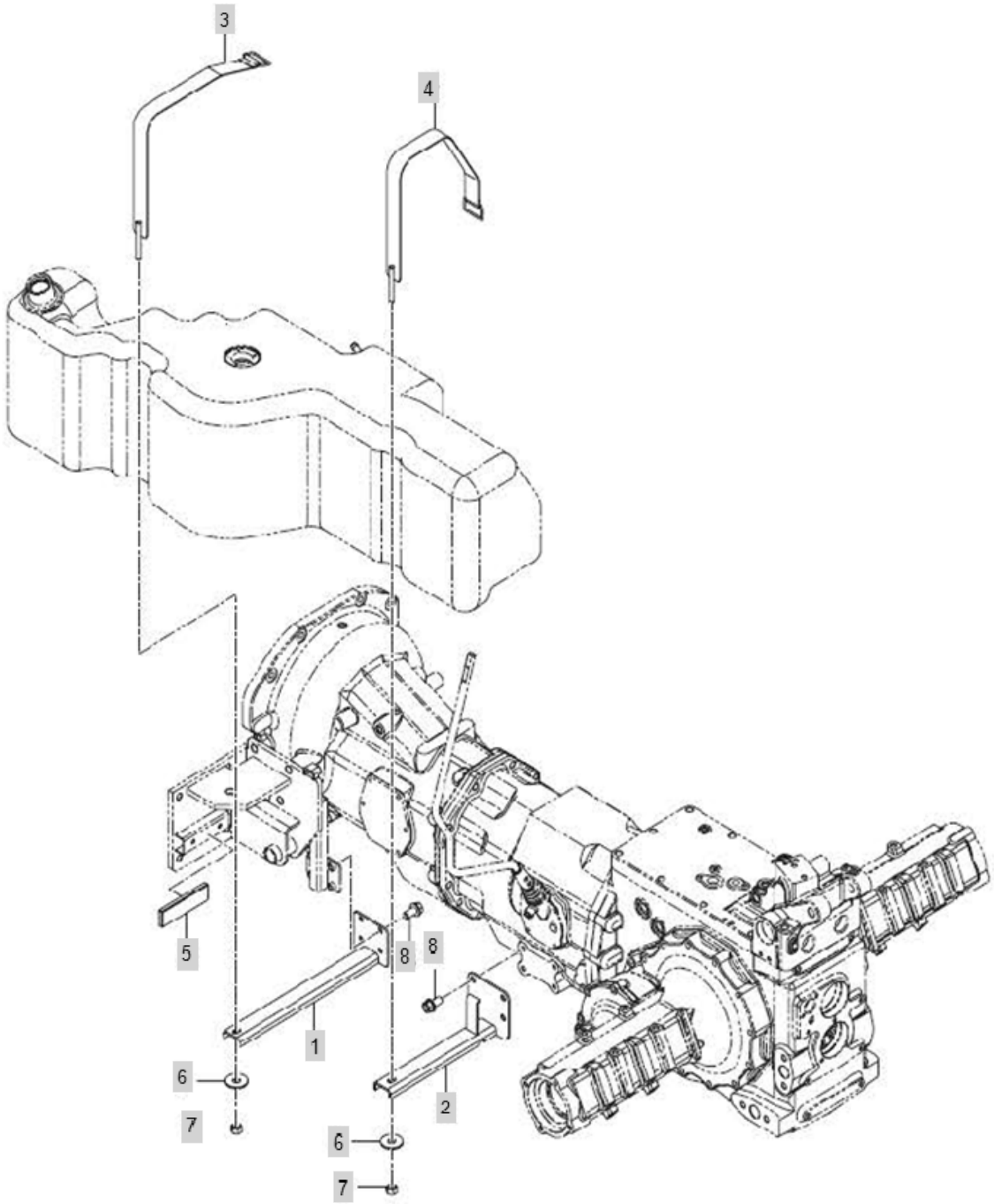

FIG C019 Branson 7845RP(US)	FUEL TANK ASS`Y	Year/Month 2020/02

KeyNo.	Part Number	Part Name	Quantity	Other
1	TA00035764B	LOWER TANK VRACKET ASSY(FR)	1	
2	TA00035767C	LOWER TANK BRACKET ASSY(RR)	1	
3	TA00035770B	BAND	1	
4	TA00035772C	band	1	
5	TND9210000A4	FOOTRESTRUBBER,DUSTPROOF	1	
6	22157-100000	WASHER, PLAIN (Φ 10)	2	
7	26716-100002	Nut, Hexa (Φ10)	2	
8	26106-100202	HEX BOLT, (10-20)	8	

FIG C020 Branson 7845RP(US)	FUEL TANK	Year/Month 2020/02

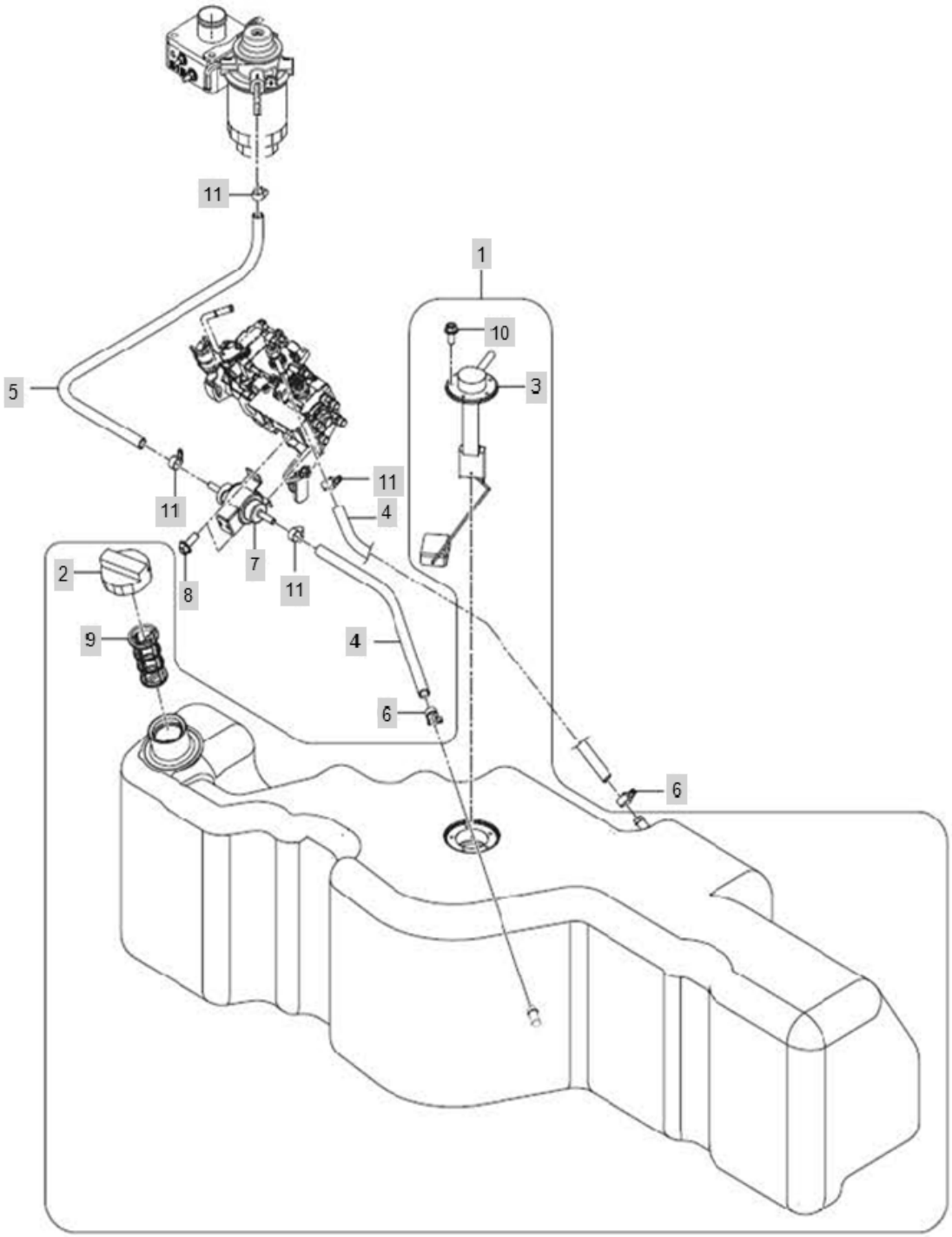

FIG C020 Branson 7845RP(US)	FUEL TANK	Year/Month 2020/02

KeyNo.	Part Number	Part Name	Quantity	Other
1	TA00035359D	TANK ASSY, FUEL	1	
2	TA00017995A	CAP, FUEL FILLER	1	
3	HA00000854A	FUEL SENSOR	1	
4	TA00036175C	FUEL LINE(1100)	2	
5	23980-730620	FLOAT HOSE	1	
6	23080-016000	HOSE CLAMP	2	
7	CT0547000KA2	FUEL FEED PUMP	1	
8	26106-060162	HEXFLANGEBOLT	2	
9	TA00027741A	FILTER STRAINER	1	
10	26106-050142	HEX FLANGE BOLT (5-14)	5	
11	23080-013000	Clamp, Hose (Φ13)	4	

FIG C021 Branson 7845RP(US)	EXHAUST PIPE MOUNTING-USA	Year/Month 2020/02

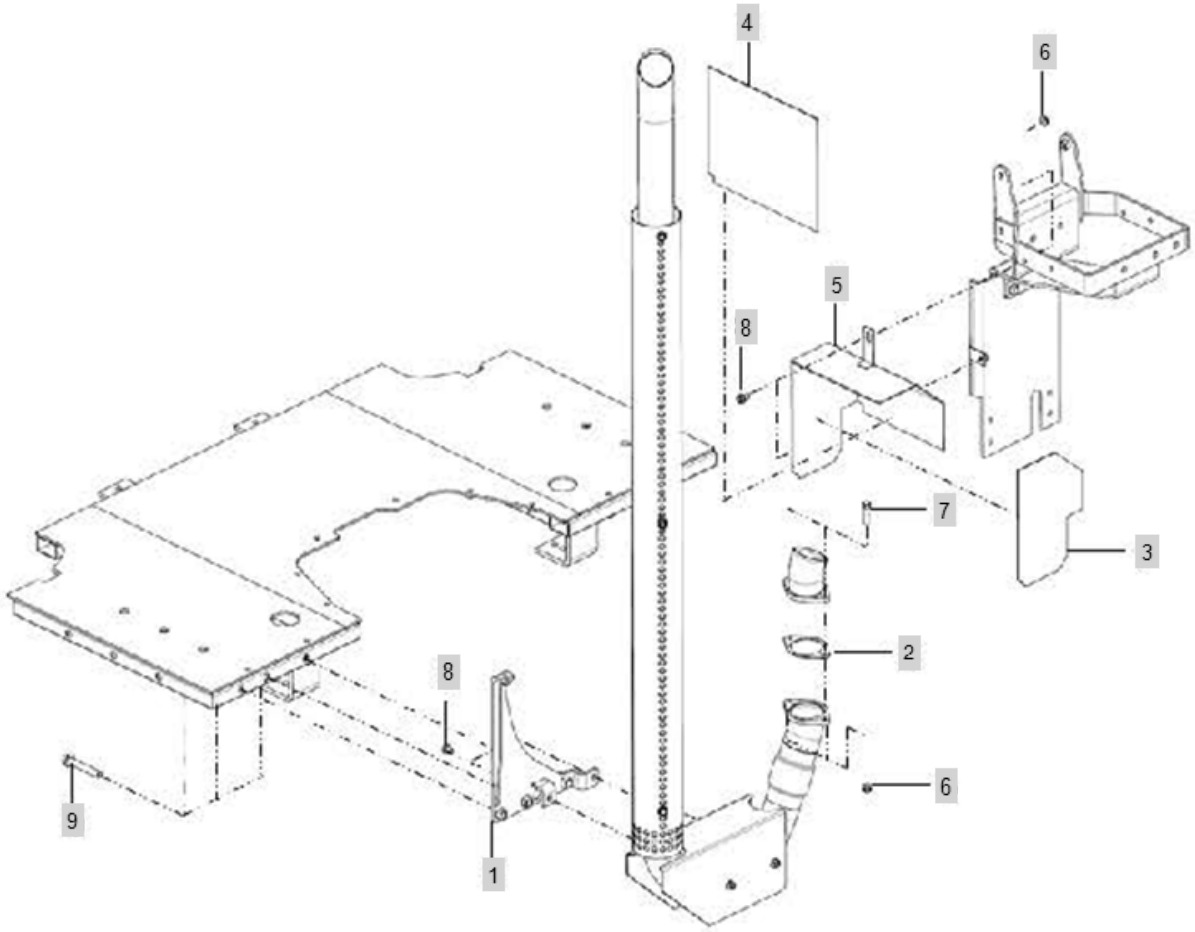

FIG C021 Branson 7845RP(US)	EXHAUST PIPE MOUNTING-USA	Year/Month 2020/02

KeyNo.	Part Number	Part Name	Quantity	Other
1	TA00040922B	EXHAUST PIPE BRACKET	1	
2	TA00021291A	GASKET	1	
3	TA00019201A	IINSULATOR	1	
4	TA00019200A	INSULATOR	1	
5	TA00036876A	BRACKET ASSY	1	
6	26367-080002	HEX FLANGE NUT (Φ8)	3	
7	26013-080352	SCREW,CAPTIVEWASHERCAP	2	
8	26106-080162	SCREW,HEXFLANGEHEADCAP	4	
9	FGG6090000B	HEXAGON BOLT AND WASHER ASSEMBLIES	3	

FIG C022 Branson 7845RP(US)	EXHAUST PIPE-USA	Year/Month 2020/02

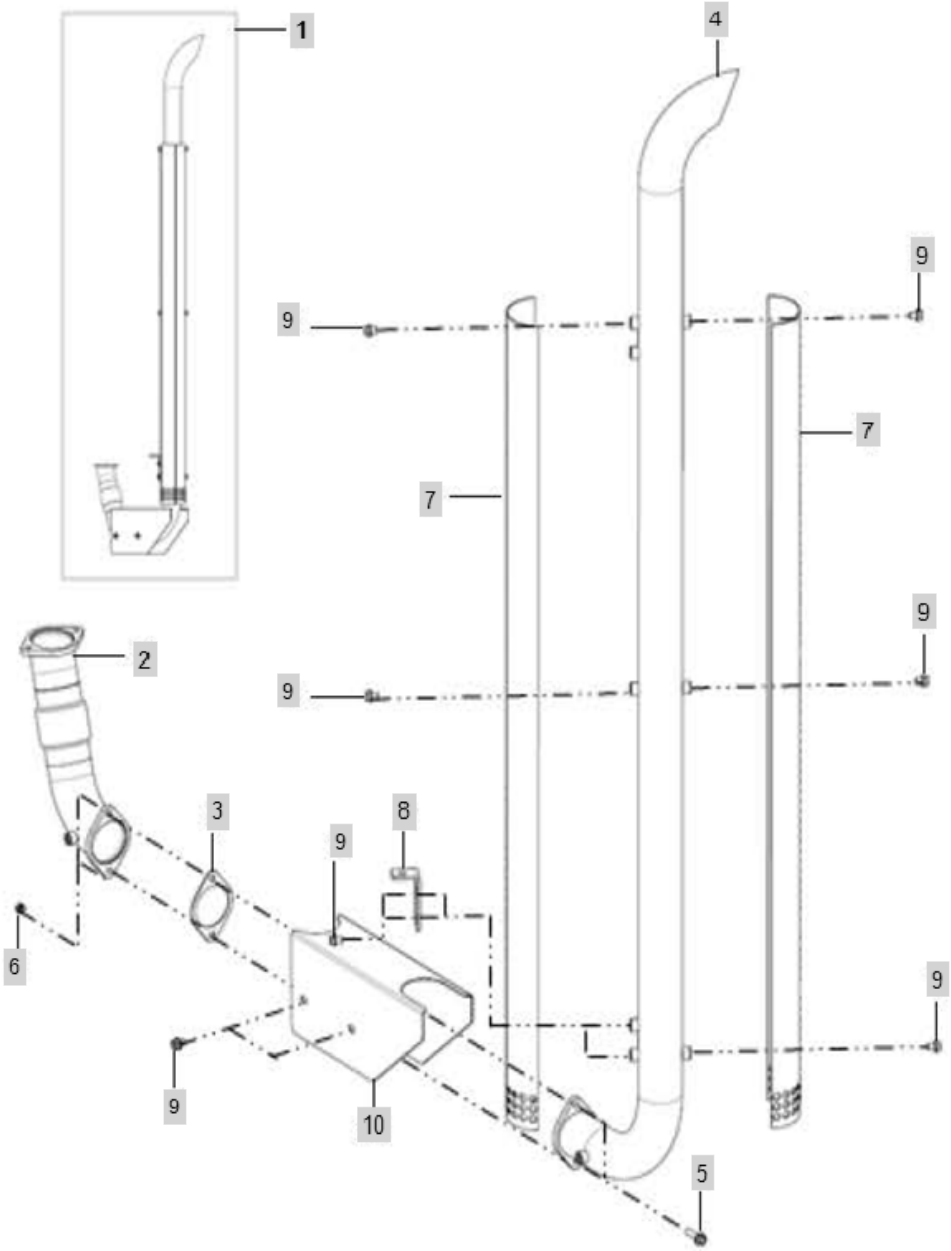

FIG C022 Branson 7845RP(US)	EXHAUST PIPE-USA	Year/Month 2020/02

KeyNo.	Part Number	Part Name	Quantity	Other
1	TA00040921B	EXHAUST PIPE ASS'Y	1	
2	TA00036898A	PIPE ASSY_MIDDLE	1	
3	TA00021291A	GASKET	1	
4	TA00000407C	EXHAUST PIPE ASSY	1	
5	26106-080302	HEX BOLT, FLANGE	2	
6	26347-080002	Unut	2	
7	TA00026084A	COVER	2	
8	TA00040991A	EXHAUST PIPE	1	
9	26106-080102	SCREW,HEXFLANGEHEADCAP	9	
10	TA00037150A	COVER	1	

FIG C023 Branson 7845RP(US)	SUB STEP	Year/Month 2020/02

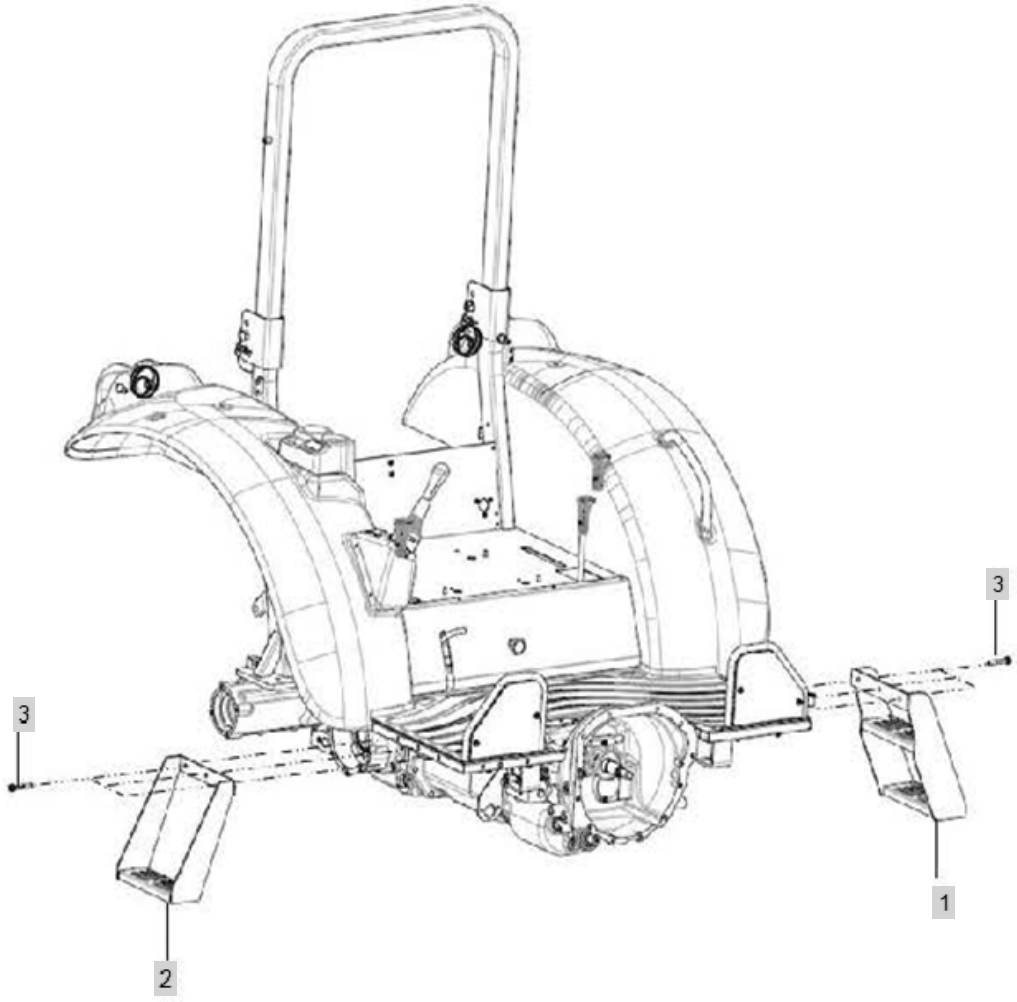

FIG C023 Branson 7845RP(US)	SUB STEP	Year/Month 2020/02

KeyNo.	Part Number	Part Name	Quantity	Other
1	TA00020134A	SUB STEP ASSY	1	
2	TA00031846A	SUB STEP ASS'Y	1	
3	FGG6090000B	HEXAGON BOLT AND WASHER ASSEMBLIES	6	

FIG C024 Branson 7845RP(US)	ROPS ASS`Y	Year/Month 2020/02

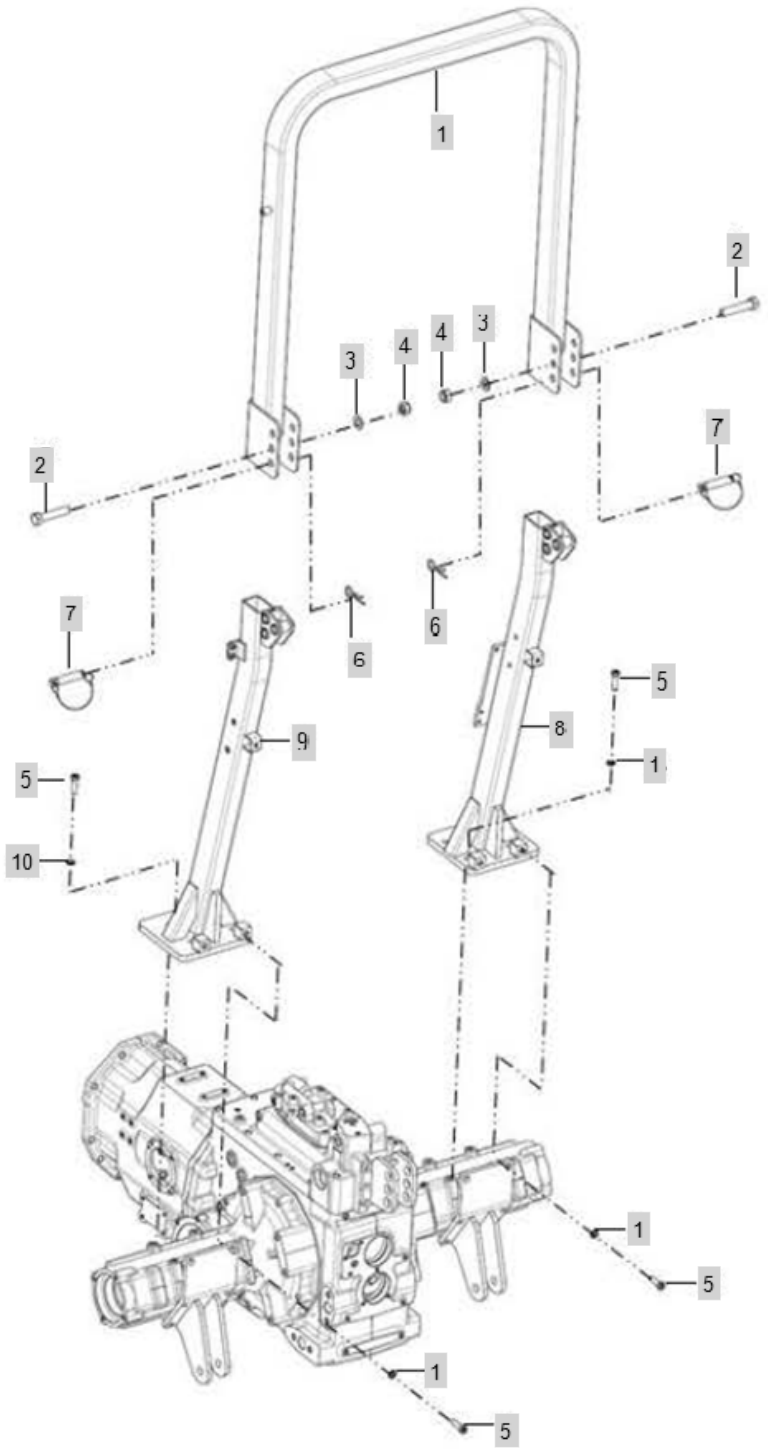

FIG C024 Branson 7845RP(US)	ROPS ASS`Y	Year/Month 2020/02

KeyNo.	Part Number	Part Name	Quantity	Other
1	TA00038586B	UPPER SUB ASSY, ROPS	1	
2	26116-180902	BOLT	2	
3	22137-180000	WASHER, PLAIN (Φ 18)	2	
4	26347-180002	NUT	2	
5	TA00041554A	HEX-BOLT(M12X1.25X39)	12	
6	TTE7010000A4	SNAPPIN	2	
7	NTF8400000A3	ROPSPIN	2	
8	TA00038585C	LOW SUB ASSY, ROPS RH	1	
9	TA00038584C	LOW SUB ASSY, ROPS LH	1	
10	22217-120000	WASHER, SPRING (Φ 12)	12	

FIG C025 Branson 7845RP(US)	BONNET ASS`Y	Year/Month 2020/02

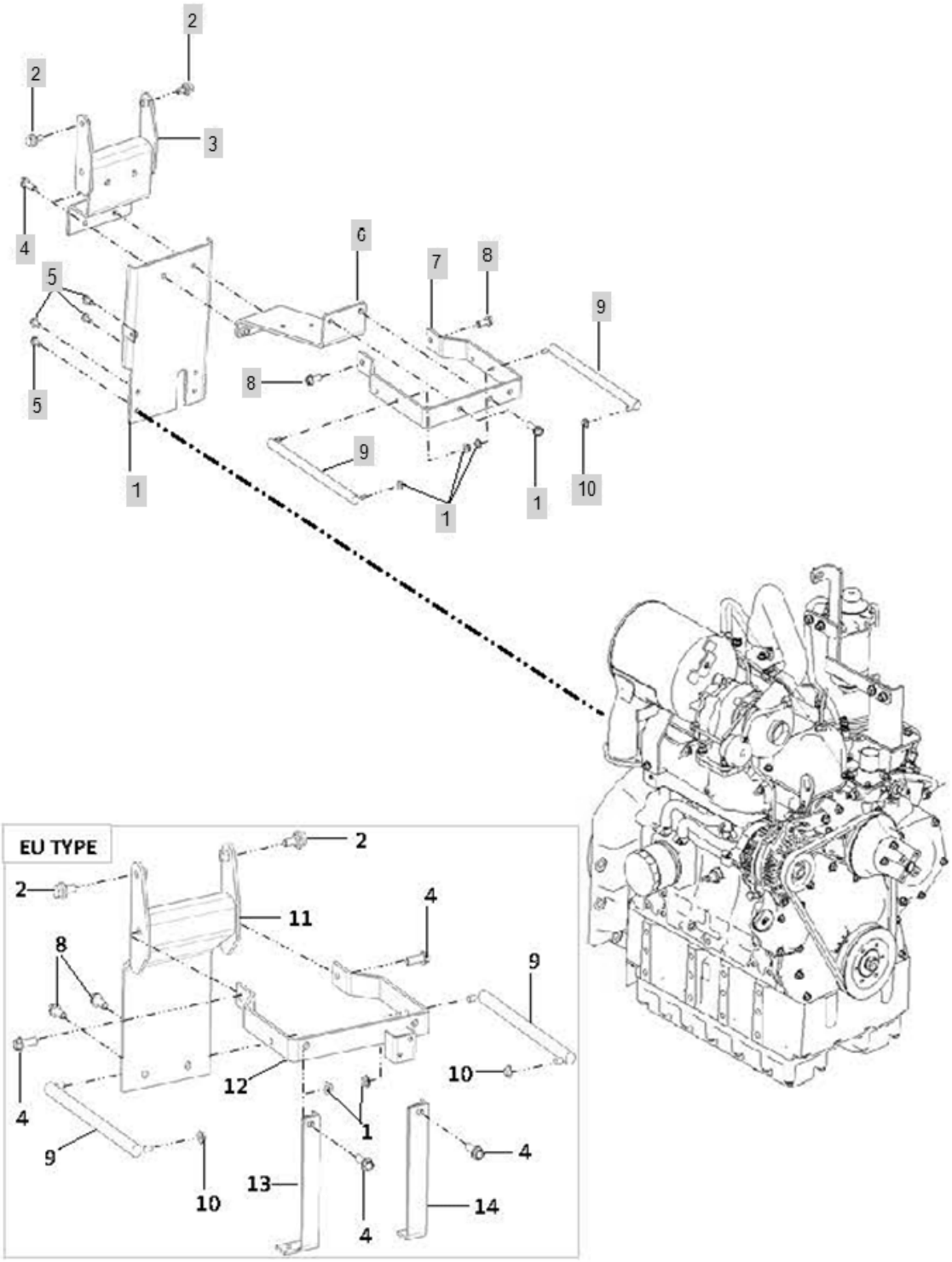

FIG C025 Branson 7845RP(US)	BONNET ASS`Y	Year/Month 2020/02

KeyNo.	Part Number	Part Name	Quantity	Other
1	TA00040859A	HINGE BRACKET ASS'Y	1	
2	TA00038230A	BOLT, BONNET	2	
3	TA00035574B	HINGE BRACKET ASS'Y	1	
4	26106-100302	HEXFLANGEBOLT	2	
5	26106-080162	SCREW,HEXFLANGEHEADCAP	4	
6	TA00035575A	BRACKET ASS'Y	1	
7	TA00035573A	COMBI LAMPCOMBI LAMP	1	
8	26106-100252	SCREW,HEXFLANGEHEADCAP	2	
9	TA00002101A	GAS SPRING	2	
10	26367-080002	HEX FLANGE NUT (Φ8)	4	

FIG C026 Branson 7845RP(US)	BONNET	Year/Month 2020/02

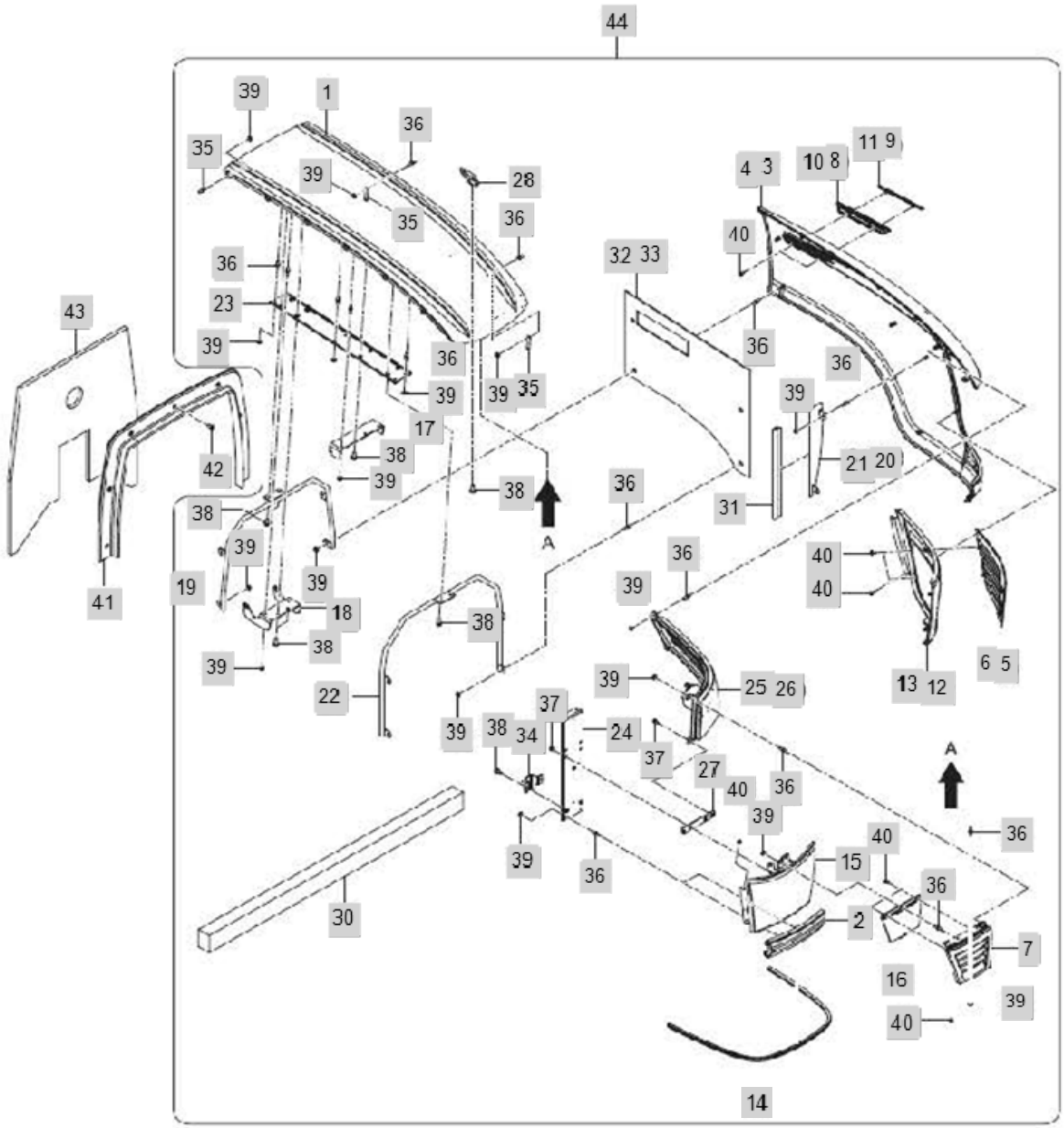

FIG C026 Branson 7845RP(US)	BONNET	Year/Month 2020/02

KeyNo.	Part Number	Part Name	Quantity	Other
1	TA00035180B	BONNET, UPPER	1	
2	TA00035182A	BONNET, LOW	1	
3	TA00035183A	BONNET, RH	1	
4	TA00035184A	BONNET, LH	1	
5	TA00035185A	SIDE GRIL, RH	1	
6	TA00035186A	SIDE GRIL, LH	1	
7	TA00035187A	CENTER GRIL	1	
8	TA00035188A	SIDE MASK, RH	1	
9	TA00035189A	BAR RH, SIDE MASK	1	
10	TA00035190A	SIDE MASK, LH	1	
11	TA00035191A	BAR LH, SIDE MASK	1	
12	TA00035323A	GRIDIRON RH	1	
13	TA00035324A	GRIDIRON LH	1	
14	TA00035332A	STRIP	1	
15	TA00035333A	GRIDIRON, FRONT	1	
16	TA00035334A	GIRDIRON, UPPER	1	
17	TA00035335A	HINDGE BRACKET, GAS SPRING	1	
18	TA00035336A	GRIDIRON F	1	
19	TA00035337B	PIPE ASSY, REAR	1	
20	TA00035338B	PLATE ASSY, RH	1	
21	TA00035339B	PLATE ASSY, LH	1	
22	TA00035340B	PIPE ASSY, FRONT	1	
23	TA00035341A	PLATE ASSY, CENTER	1	
24	TA00035372B	BRACKET ASSY, SUPPORT	1	
25	TA00036559A	HEAD LAMP ASSY LH	1	
26	TA00036568A	HEAD LAMP ASSY RH	1	
27	TA00036574A	BRACKET, HEAD LAMP	1	
28	TA00036726A	EMBLEM	1	
29	26106-100142	Bolt, Hexa (10-14)	1	
30	TA00038069A	PAD	1	
31	TA00038125A	STRIP, HOOD	2	
32	TA00038768A	INSULATOR(BONNET L)	1	
33	TA00038769A	INSULATOR(BONNET R)	1	
34	TA00038853A	LOCKING BRACKET ASS`Y	1	
35	TCD5310000A4	Clamp, Harness C	2	
36	TA00001332A	INSERT BOLT(M6)	58	
37	26106-060162	HEXFLANGEBOLT	4	
38	26106-080162	SCREW,HEXFLANGEHEADCAP	10	
39	26367-060002	Nut, Hexa (Φ6)	58	
40	26476-050122	PLANGE HEXA BOLT	29	
41	TA00035210A	HEAD LAMP ASSEMBLY	1	
42	26577-080142	SCREW	7	
43	TA00040826A	PLATE	1	
44	TA00035354D	BONNET ASSY	1	

FIG C027 Branson 7845RP(US)	ACCELERATION SYSTEM	Year/Month 2020/02

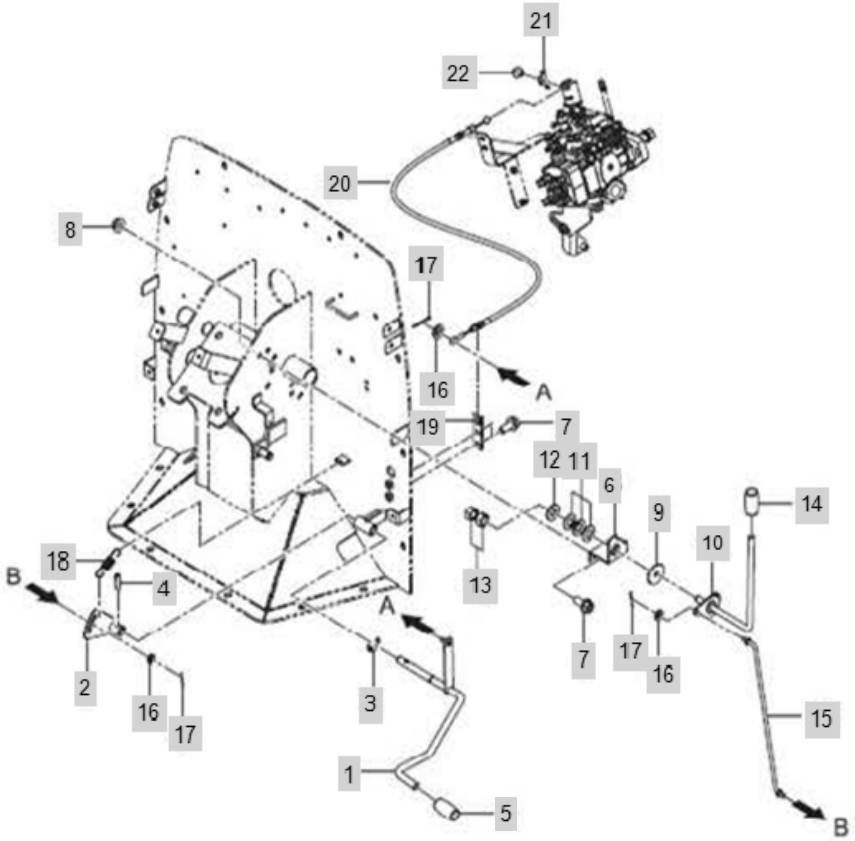

FIG C027 Branson 7845RP(US)	ACCELERATION SYSTEM	Year/Month 2020/02

KeyNo.	Part Number	Part Name	Quantity	Other
1	TA00036653A	PEDAL ASSY	1	
2	TA00036662A	LEVER HOLDER	1	
3	22272-000100	RING, CIRCLIP (Φ 10)	1	
4	22351-060020	PIN, SPRING (6-20)	1	
5	FT02180000A4	FEADL FLOWER	1	
6	TA00036305A	BRACKET(ACCEL)	1	
7	26106-080182	SCREW,HEXFLANGEHEADCAP	4	
8	26367-080002	HEX FLANGE NUT (Φ8)	2	
9	TC45060000A4	FRICTIONPLATE	1	
10	TA00036303B	LEVER(ACCEL)	1	
11	TC45010000A4	SPRINGWASHER10	3	
12	22137-100000	WASHER, PLAIN (Φ 10)	1	
13	26716-100002	Nut, Hexa (Φ10)	2	
14	TA00023417A	LEVER,STAND	1	
15	TA00036965B	ROD ASSY	1	
16	22117-060000	WASHER, PLAIN (Φ 06)	3	
17	22417-160160	PIN , COTTER (1-16)	3	
18	RA00002397B	SPRING, SPARE SEEDLING TRAY	1	
19	TA00036668A	BRACKET, WIRE	1	
20	TA00038350A	CABLE, ACCEL	1	
21	TA00021386A	BRACKET(ACCELERATOR)	1	
22	26106-060122	HEX BOLT (6-12)	1	

FIG C028 Branson 7845RP(US)	HORN	Year/Month 2020/02

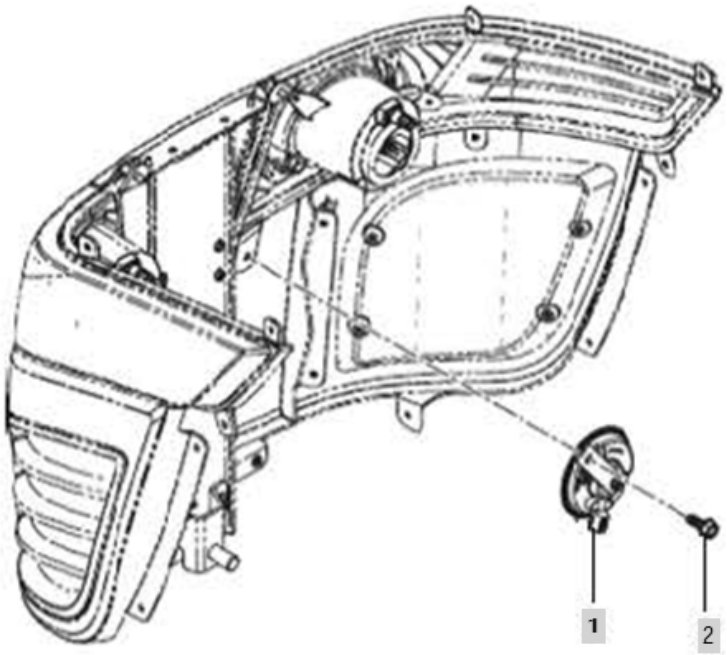

FIG C028 Branson 7845RP(US)	HORN	Year/Month 2020/02

KeyNo.	Part Number	Part Name	Quantity	Other
1	HA00000929A	HORN	1	
2	26106-060162	HEXFLANGEBOLT	1	

FIG C029-1 Branson 7845RP(US)	STEERING COLUMN	Year/Month 2020/02

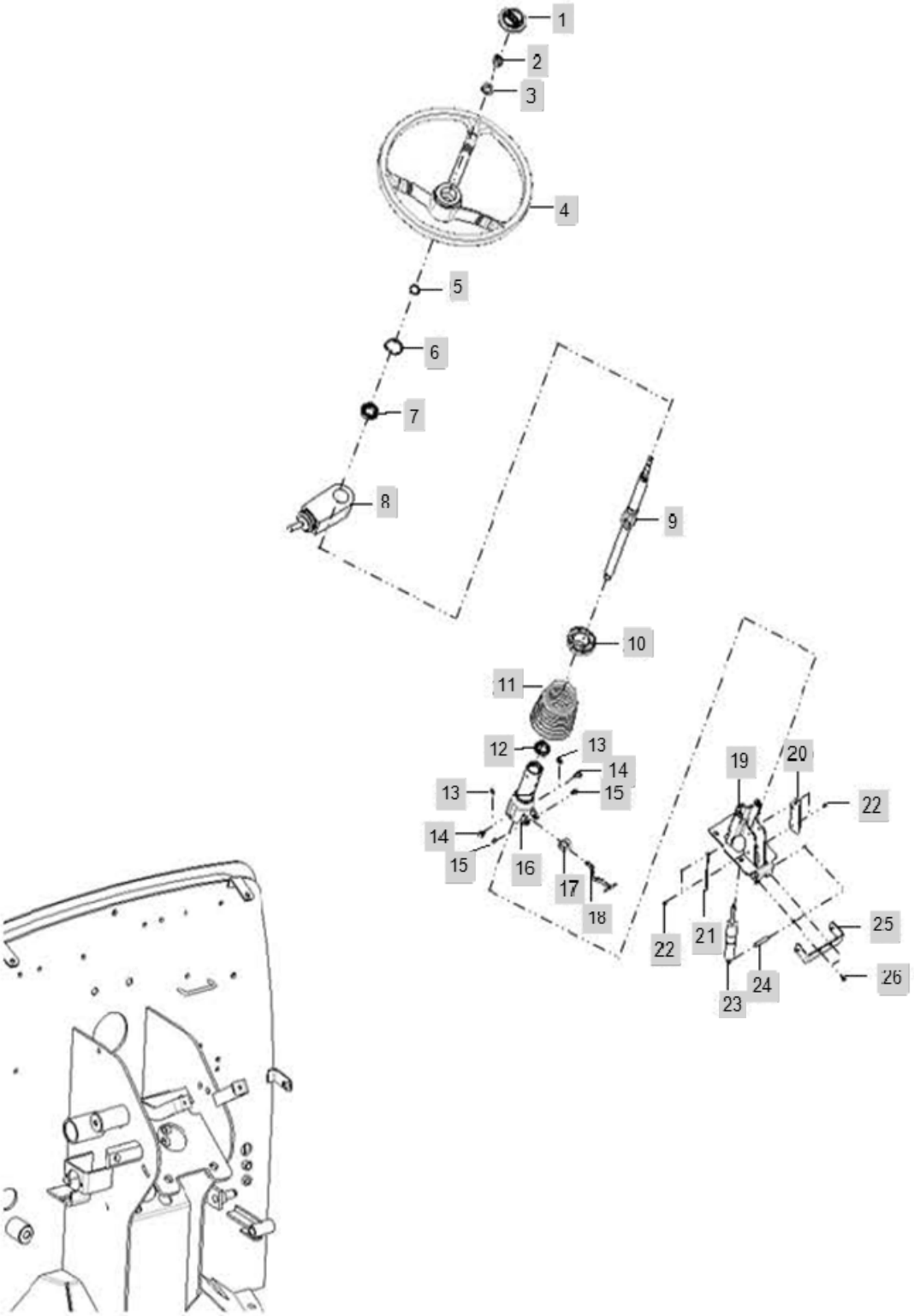

FIG C029-1 Branson 7845RP(US)	STEERING COLUMN	Year/Month 2020/02

KeyNo.	Part Number	Part Name	Quantity	Other
1	TA00026432A	STEERING WHEEL CAP (BRANSON)	1	
2	TA00048436A	U-NUT	1	
3	22137-160000	WASHER, PLAIN (Φ 16)	1	
4	TZ29030000A1	STEERING WHEEL	1	
5	22242-000250	SNAP RING, SHAFT (Φ 25)	1	
6	22252-000420	RING, CIRCLIP (Φ 42)	1	
7	24104-069054	BALL BEARING	1	
8	HA00001034A	F/R SWITCH	1	
9	TA00042044A	STEERING SHAFT ASSY(ROPS)	1	
10	TA00041486B	FIXED BUSH, BOOTS	1	
11	TA00016445A	BOOTS	1	
12	24107-069064	DEEP GROOVE BALL BEARING	1	
13	TA00000546A	HINGE BRACKET	2	
14	TA00000571A	BOLT	2	
15	TA00016409A	BOLT	2	
16	TA00000561C	COLUM PIPE ASSY	1	
17	TA00000577A	BRACKET	1	
18	TA00016447B	TILTING LEVER	1	
19	TA00000544B	STEERING COLUM ASSY	1	
20	TA00000538A	TILT STOPER RH	1	
21	TA00000537A	TILT STOPER LH	1	
22	26553-050102		4	
23	TA00000576A	GAS SPRING	1	
24	22312-100500	PARRELL PIN	1	
25	TA00041500A	BRACKET	1	
26	26106-050142	HEX FLANGE BOLT (5-14)	2	

FIG C030-1 Branson 7845RP(US)	COLUMN STAY & CLUTCH PEDAL	Year/Month 2020/02

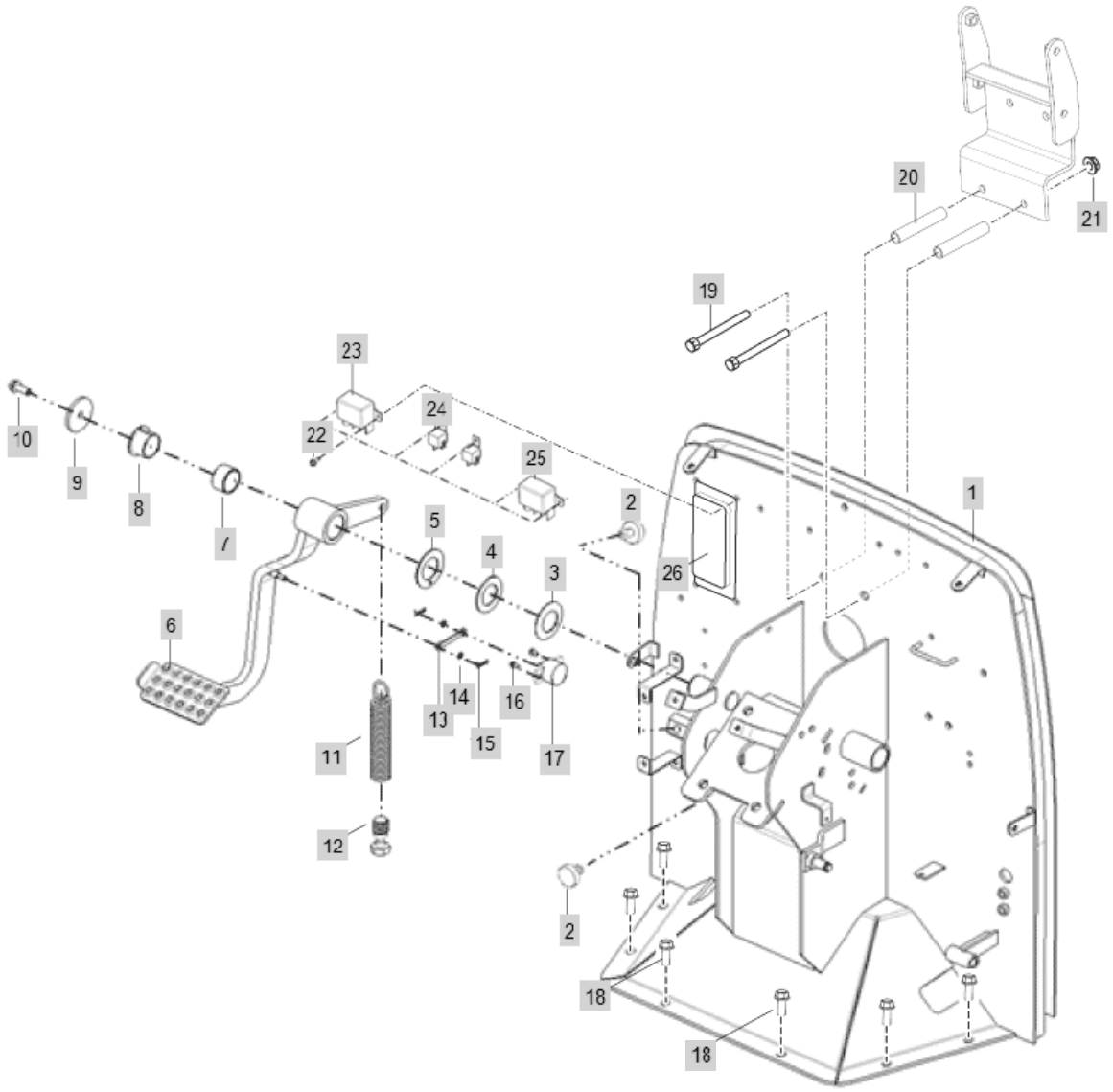

FIG C030-1 Branson 7845RP(US)	COLUMN STAY & CLUTCH PEDAL	Year/Month 2020/02

KeyNo.	Part Number	Part Name	Quantity	Other
1	TA00041274C	STAY ASS'Y(RP), COLUM	1	
2	TA00016153A	RUBBER STOPER	2	
3	TA00025428A	DISK SPRING	1	
4	TT52260000B4		1	
5	TA00025441A	THRUST BUSH	1	
6	TA00055079A	PEDAL, CLUTCH	1	
6-1	TA00023612C	CLUTCHPEDAL	1	deleted
7	24550-030200	BUSH	1	
8	TA00025430A	FLANGE BUSH	1	
9	TA00016170A	WASHER	1	
10	26106-080222	SCREW, HEX FLANGE HEAD CAP	1	
11	TA00016147A	CLUTCH SPRING	1	
12	TA00016150A	TENSION BOLT	1	
13	TA00016171A	PLATE	1	
14	22217-050000	WASHER, SPRING (Φ 05)	2	
15	RR47070000B4	PIN 6, COME-OFF SNAP	2	
16	26023-040102	SCREW W/WASHER	2	
17	HA00000851A	CLUTCH SENSOR	1	
18	26106-080202	SQR FLANGE BOLT	6	
19	26116-101352	BOLT	2	
20	TA00040703A	COLUMN FIXED BUSH	2	
21	26367-100002	NUT,HEXAGONFLANGE	2	
22	26106-060182	Bolt, Hexa (6-18)	6	
23	HA00000300A	GROW RELAY 150A	1	
24	FTB9160000A3	GLOW RELAY (12V-70A)	2	
25	HA00000821A	FLASHER RELAY	1	
26	HA00000820B	CONTROLL LUXEN5	1	

FIG C030-2 Branson 7845RP(US)	COLUMN STAY & CLUTCH PEDAL(2019.04~)	Year/Month 2020/02

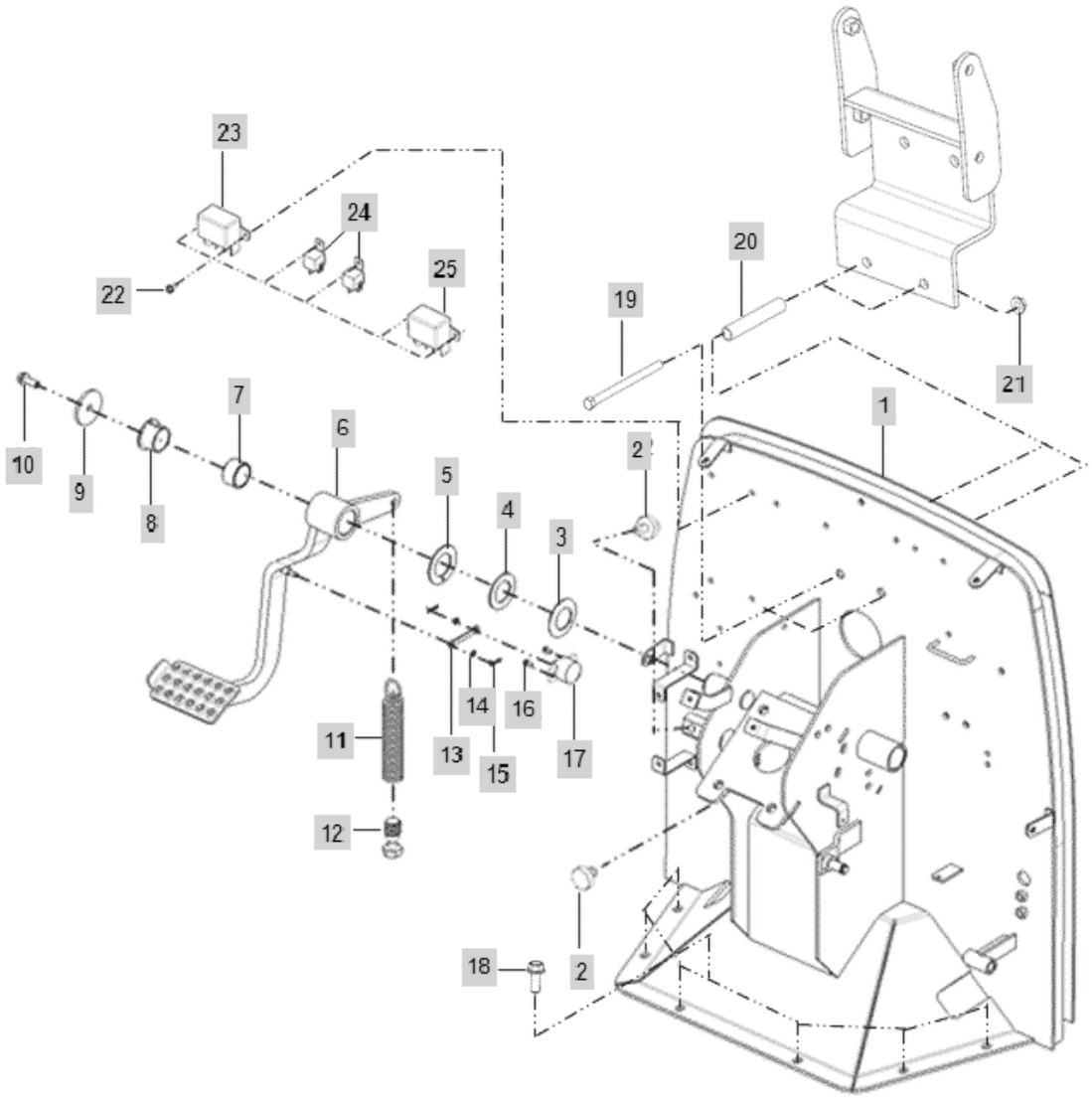

FIG C030-2 Branson 7845RP(US)	COLUMN STAY & CLUTCH PEDAL(2019.04~)	Year/Month 2020/02

KeyNo.	Part Number	Part Name	Quantity	Other
1	TA00041274C	STAY ASS'Y(RP), COLUM	1	
2	TA00016153A	RUBBER STOPER	2	
3	TA00025428A	DISK SPRING	1	
4	TT52260000B4		1	
5	TA00025441A	THRUST BUSH	1	
6	TA00055079A	PEDAL, CLUTCH	1	
7	24550-030200	BUSH	1	
8	TA00025430A	FLANGE BUSH	1	
9	TA00016170A	WASHER	1	
10	26106-080222	SCREW, HEX FLANGE HEAD CAP	1	
11	TA00016147A	CLUTCH SPRING	1	
12	TA00016150A	TENSION BOLT	1	
13	TA00016171A	PLATE	1	
14	22217-050000	WASHER, SPRING (Φ 05)	2	
15	RR47070000B4	PIN 6, COME-OFF SNAP	2	
16	26023-040102	SCREW W/WASHER	2	
17	HA00000851A	CLUTCH SENSOR	1	
18	26106-080202	SQR FLANGE BOLT	6	
19	26116-101352	BOLT	2	
20	TA00040703A	COLUMN FIXED BUSH	2	
21	26367-100002	NUT,HEXAGONFLANGE	2	
22	26106-060182	Bolt, Hexa (6-18)	6	
23	HA00000300A	GROW RELAY 150A	1	
24	FTB9160000A3	GLOW RELAY (12V-70A)	2	
25	HA00000821A	FLASHER RELAY	1	

FIG C032 Branson 7845RP(US)	DRAFT LINK	Year/Month 2020/02

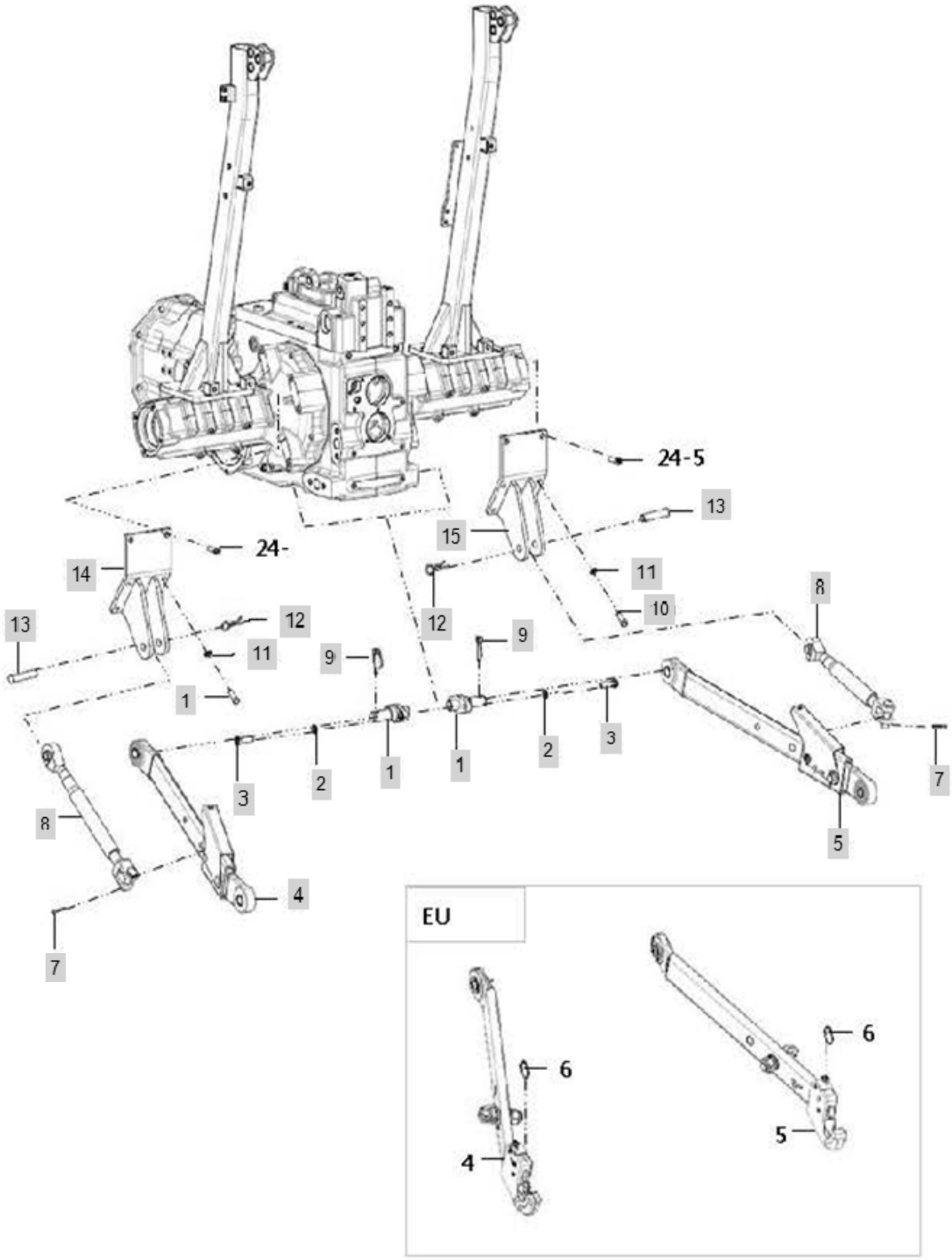

FIG C032 Branson 7845RP(US)	DRAFT LINK	Year/Month 2020/02

KeyNo.	Part Number	Part Name	Quantity	Other
1	FT82080000A3	LINK PIN	2	
2	22217-140000	WASHER, SPRING (Φ 14)	4	
3	FT08090000A4	BOLT (M14X45)	4	
4	TA00040287A	LOWER LINK(L)	1	
5	TA00040288A	LOWER LINK(R)	1	
6	TB46070000A4	RING	2	
7	22417-500320	PIN , COTTER (5-32)	2	
8	TA00041624A	STABILIZER BAR ASSY	2	
9	TB44030000B4	RING PIN ASSY	2	
10	TH19170000A4	BOLT	8	
11	22217-120000	WASHER, SPRING (Φ 12)	8	
12	TTE7010000A4	SNAPPIN	2	
13	FTF0100000A4	FIXING PIN, CHECK CHAIN	2	
14	TA00041402A	STABLIZER BRACKET(L)	1	
15	TA00041403A	STABLIZER BRACKET(R)	1	

FIG C033 Branson 7845RP(US)	CENTER LINK	Year/Month 2020/02

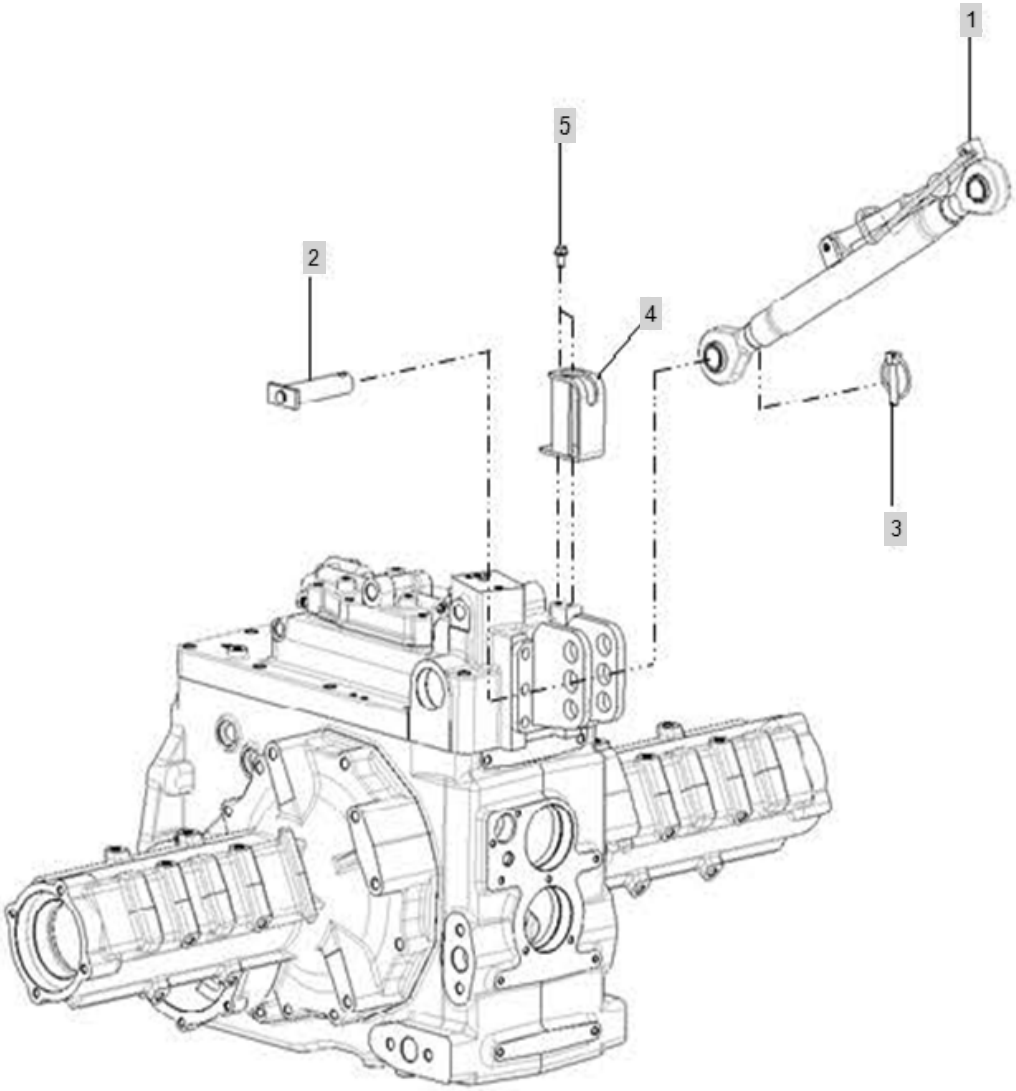

FIG C033 Branson 7845RP(US)	CENTER LINK	Year/Month 2020/02

KeyNo.	Part Number	Part Name	Quantity	Other
1	TA00017290C	LINK, CENTER	1	
2	TH26080000A3	PIN A'SSY	1	
3	TB44030000B4	RING PIN ASSY	1	
4	TA00037243B	HOLDER ASS'Y, TOP LINK	1	
5	26106-080162	SCREW,HEXFLANGEHEADCAP	2	

FIG C034 Branson 7845RP(US)	LIFT LINK	Year/Month 2020/02

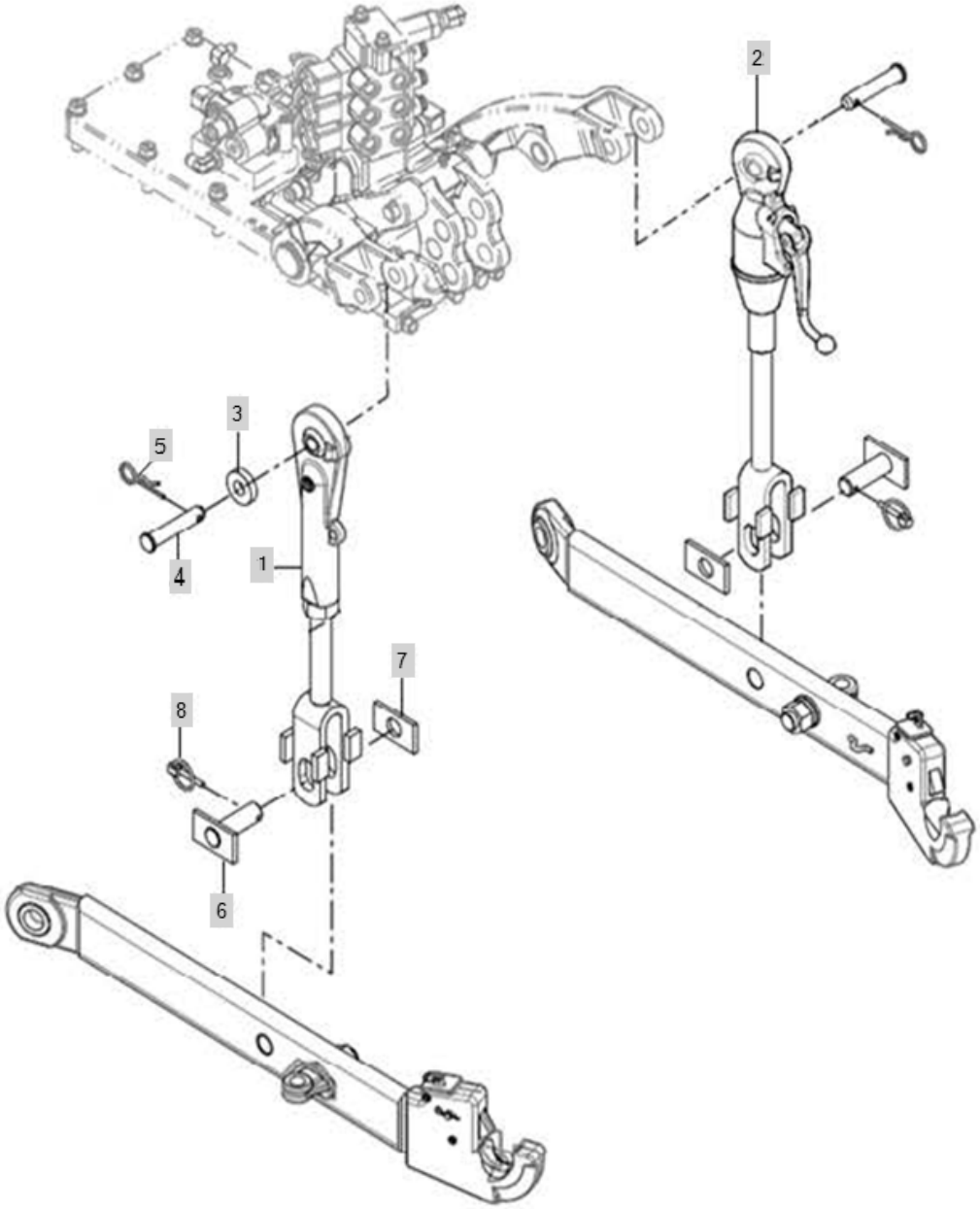

FIG C034 Branson 7845RP(US)	LIFT LINK	Year/Month 2020/02

KeyNo.	Part Number	Part Name	Quantity	Other
1	FTE8040000F1	LIFT LINK ASSY-L	1	
2	FTE7090000E		1	
3	FTE7330000A4	COLLAR	1	
4	TA00037125C	PIN, LIFTLINK	2	
5	TTE7010000A4	SNAPPIN	2	
6	FTE7300000E4	LIFT YORK PIN	2	
7	FTE7300200B4	STOPPER	2	
8	TJ30110000A4	RING PIN	2	

FIG C035 Branson 7845RP(US)	DRAWBAR	Year/Month 2020/02

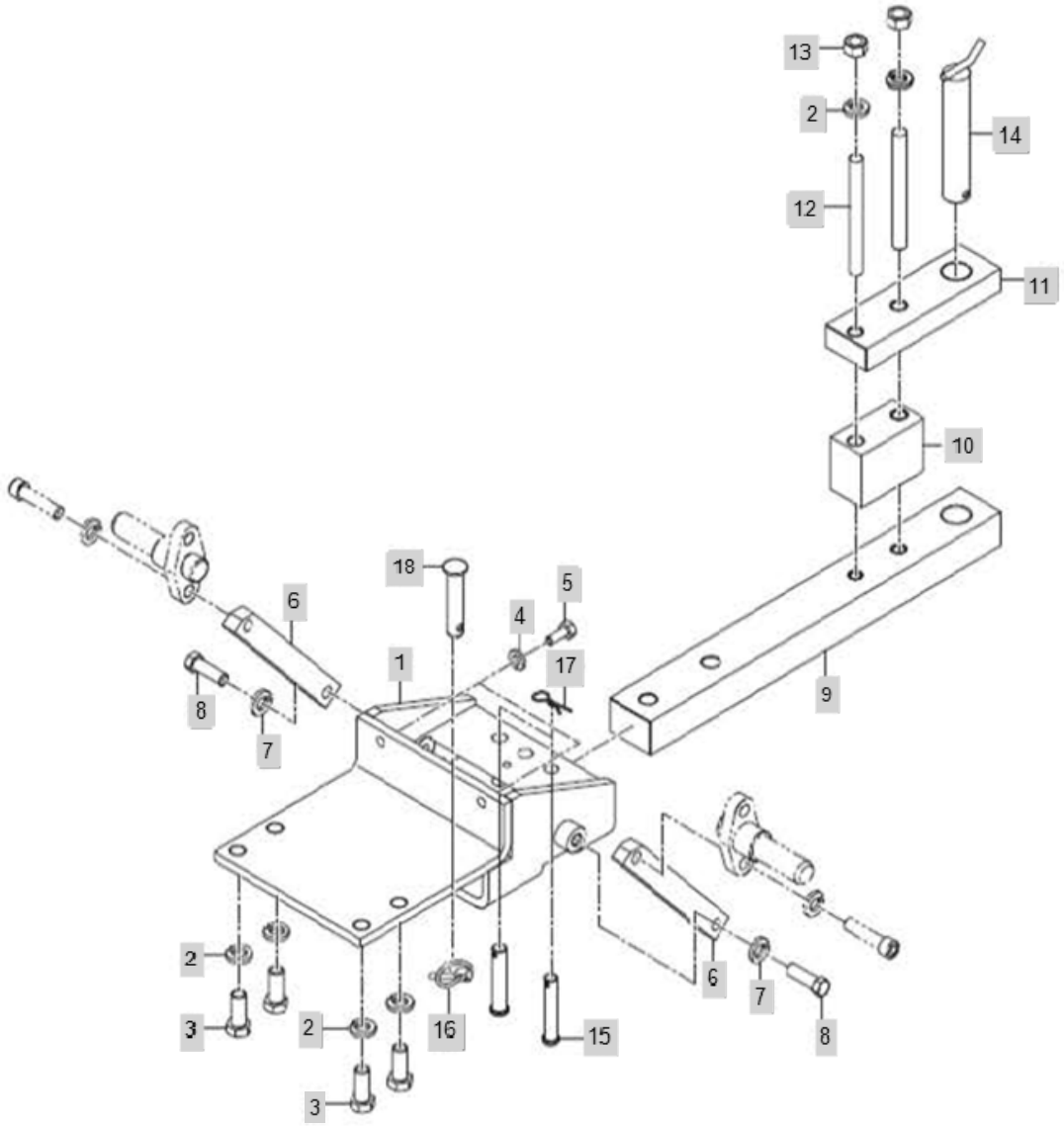

FIG C035 Branson 7845RP(US)	DRAWBAR	Year/Month 2020/02

KeyNo.	Part Number	Part Name	Quantity	Other
1	TA00036133B	DRAWBAR BRACKET ASS'Y	1	
2	22217-160000	WASHER, SPRING (Φ 16)	6	
3	TA00018261A	BOLT	4	
4	22217-100000	WASHER, SPRING (Φ 10)	2	
5	FT78150000B4	HEX BOLT	2	
6	TA00036149A	DRAWBAR SUPPORT	2	
7	22217-140000	WASHER, SPRING (Φ 14)	2	
8	FT08090000A4	BOLT (M14X45)	2	
9	TA00029514C	DRAWBAR	1	
10	TA00033327A	PLATE	1	
11	TA00033326A	CLEVIS	1	
12	TA00023915A	STUD BOLT	2	
13	26732-160002	HEX NUT (FINE THREAD)	2	
14	TA00033328A	PIN	1	
15	TA00038252A	PIN	2	
16	TJ30110000A4	RING PIN	1	
17	TTE7010000A4	SNAPPIN	2	
18	TA00038245A	PIN	1	

FIG C036 Branson 7845RP(US)	PTO COVER	Year/Month 2020/02

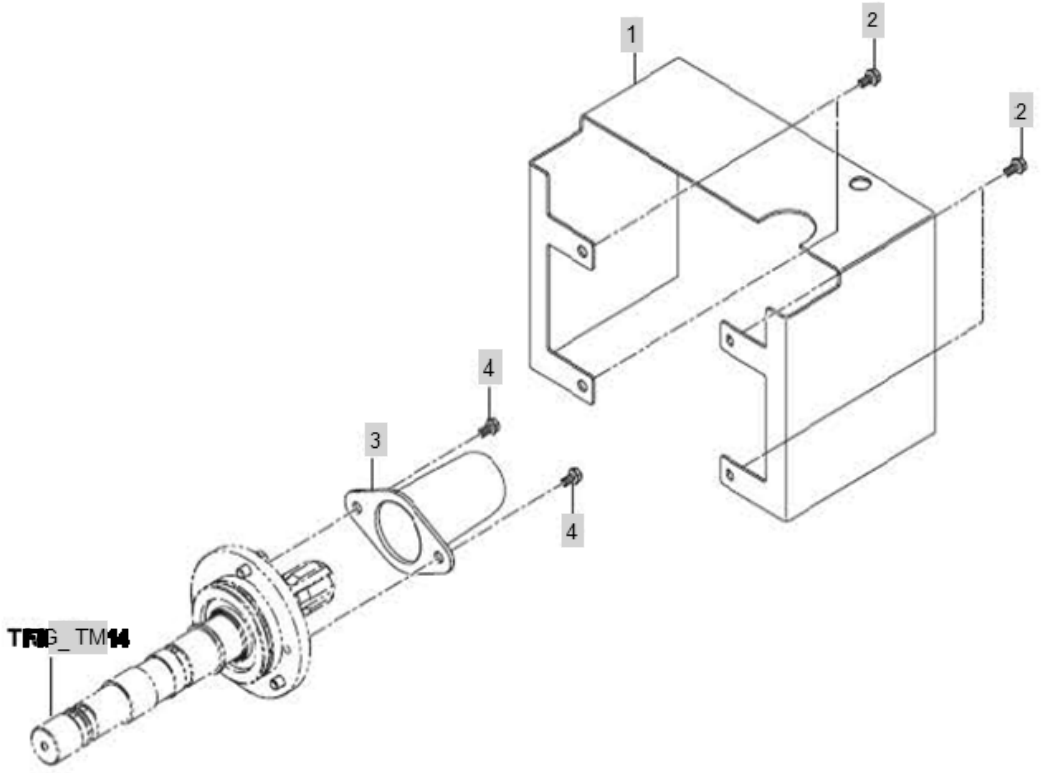

FIG C036 Branson 7845RP(US)	PTO COVER	Year/Month 2020/02

KeyNo.	Part Number	Part Name	Quantity	Other
1	TA00036939B	COVER ASS'Y, PTO SHAFT	1	
2	26106-080162	SCREW,HEXFLANGEHEADCAP	4	
3	TT80030000A3	P.T.OCOVER	1	
4	26013-060122	Bolt, Hexa (6-12)	2	
FIG_ TM14	F014		1	

FIG C037 Branson 7845RP(US)	LEVER KNOB	Year/Month 2020/02

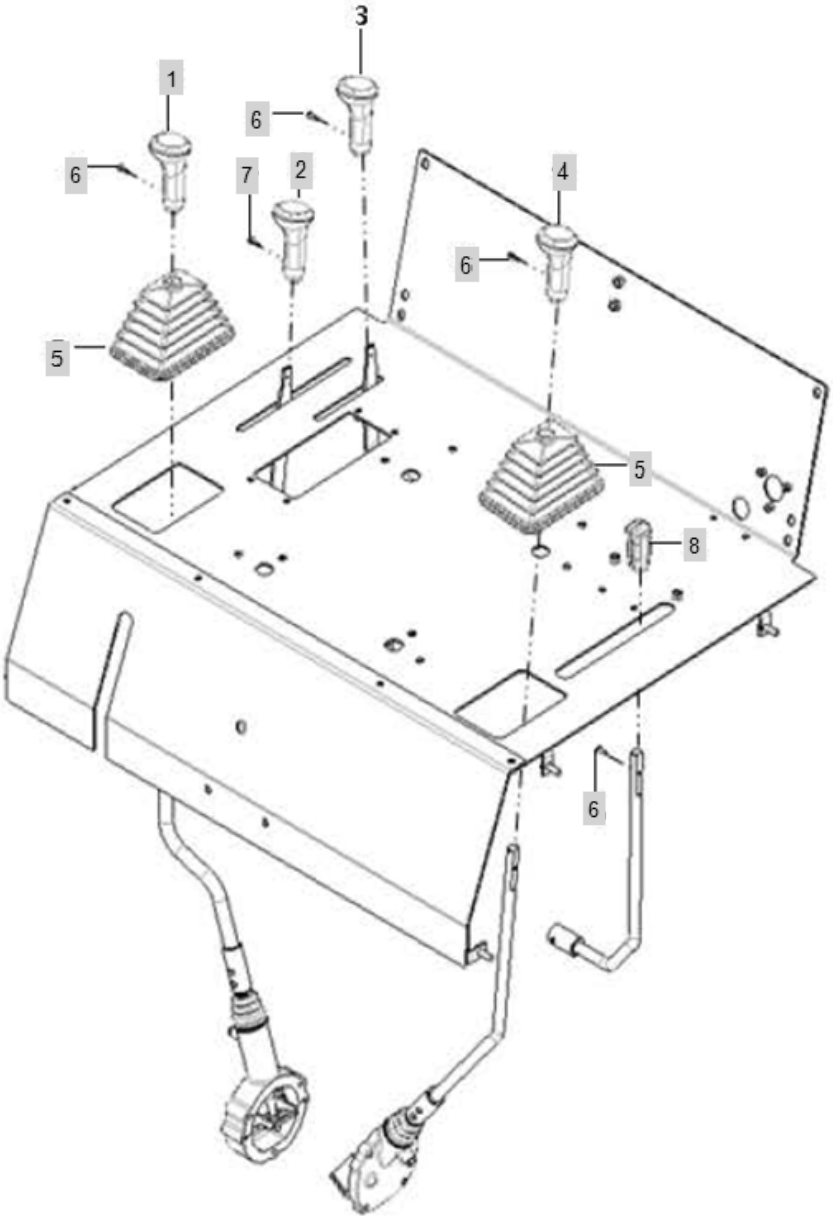

FIG C037 Branson 7845RP(US)	LEVER KNOB	Year/Month 2020/02

KeyNo.	Part Number	Part Name	Quantity	Other
1	TA00020033A	KNOB, MAIN SHIFT	1	
2	TA00030762A	KNOB, POSITOIN CONTROL	1	
4	TA00036827B	SUB-SHIFT KONB	1	
5	TA00040957A	SHIFT-BOOT	2	
6	26023-040162	SCREW	4	
7	26023-040102	SCREW W/WASHER	1	
8	TA00038865A	PTO LEVER KNOB	1	

FIG C039 Branson 7845RP(US)	REAR SCV LEVER	Year/Month 2020/02

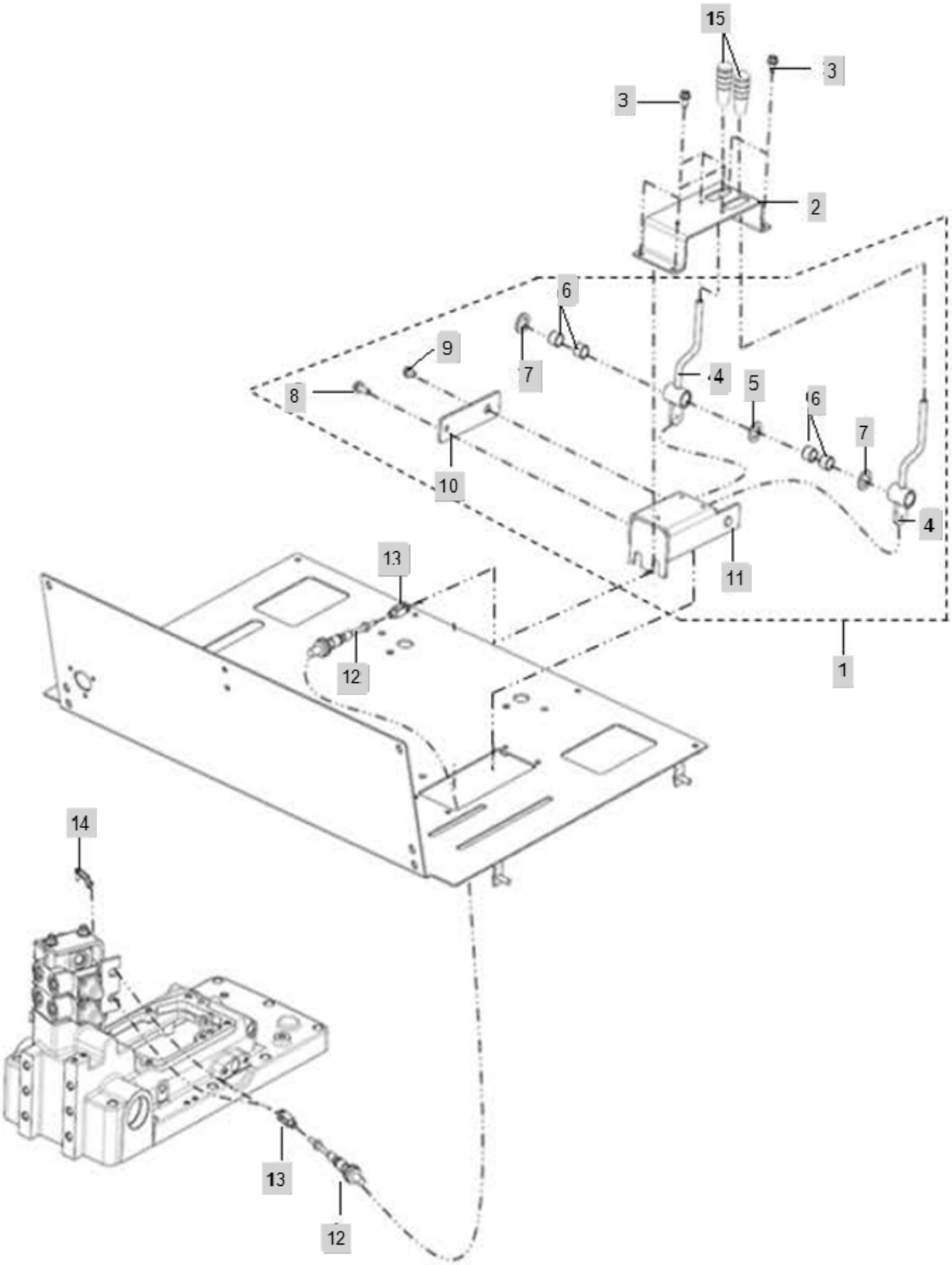

FIG C039 Branson 7845RP(US)	REAR SCV LEVER	Year/Month 2020/02

KeyNo.	Part Number	Part Name	Quantity	Other
1	TA00040929B	LEVER ASSY, REAR SCV	1	
2	TA00041004B	SCV LEVER COVER	1	
3	26106-080162	SCREW,HEXFLANGEHEADCAP	7	
4	TA00040999A	SCV LEVER 1	2	
5	FBB1760000A4	Collar	1	
6	24550-018150	DRY BUSH	4	
7	TTB1190000A4	PLATE	2	
8	26106-080202	SQR FLANGE BOLT	1	
9	26106-080122	Bolt, Hexa (8-12)	1	
10	TA00041001A	FIXED BRACKET, SCV LEVER	1	
11	TA00040995A	SCV LEVER BRACKET	1	
12	TA00040928A	CABLE, REAR SCV	2	
13	THB5408000B4	YORK	4	
14	TA00017913B	SPRING LOCK PIN	4	
15	VD05460000A4	LEVER(BLACK)	2	

FIG C040 Branson 7845RP(US)	T/M OIL IN-LET	Year/Month 2020/02

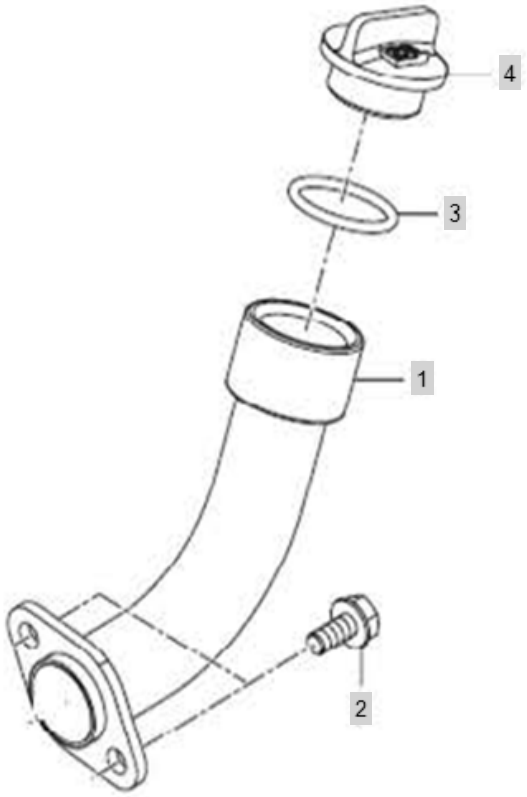

FIG C040 Branson 7845RP(US)	T/M OIL IN-LET	Year/Month 2020/02

KeyNo.	Part Number	Part Name	Quantity	Other
1	TA00036963A	OIL PIPE ASS'Y	1	
2	26106-080162	SCREW,HEXFLANGEHEADCAP	2	
3	24311-000320	O-RING, DYNAMIC (Φ32)	1	
4	HC03470000B4	CAP,FILTER	1	

FIG C041 Branson 7845RP(US)	DRIVER`S SEAT	Year/Month 2020/02

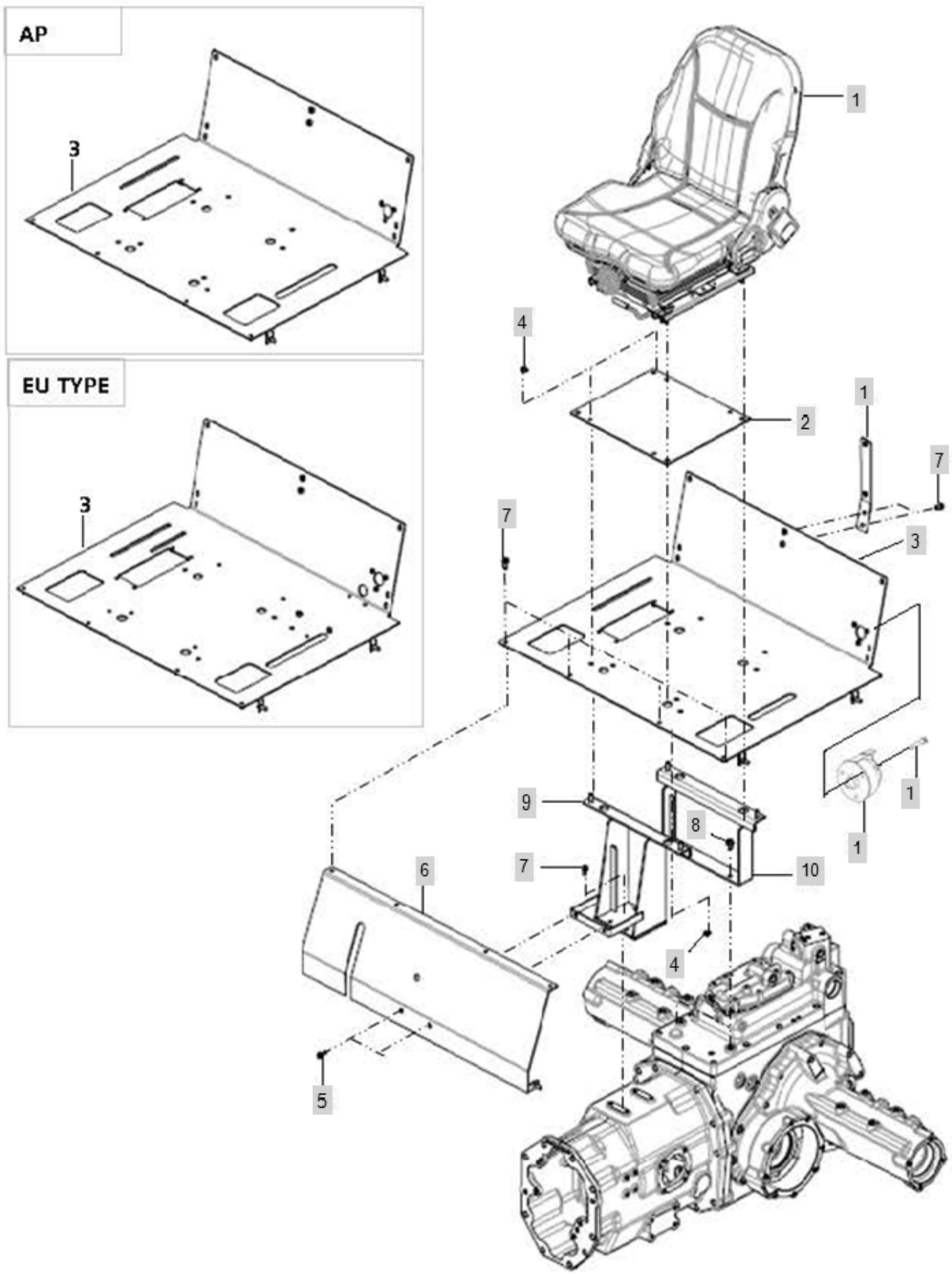

FIG C041 Branson 7845RP(US)	DRIVER`S SEAT	Year/Month 2020/02

KeyNo.	Part Number	Part Name	Quantity	Other
1	TA00028164B	20R SERIES SEAT	1	
2	TA00040994A	SEAT BRACKET	1	
3	TA00041328B	REAR COVER ASSY(USA)	1	
4	26367-080002	HEX FLANGE NUT (Φ8)	8	
5	26106-080202	SQR FLANGE BOLT	2	
6	TA00040307C	FRONT COVER ASSY	1	
7	26106-080162	SCREW,HEXFLANGEHEADCAP	10	
8	26106-100162	SCREW,HEXFLANGEHEADCAP	2	
9	TA00039765A	SUPPORT BRACKET ASSY, SEAT	1	
10	TA00040309A	SEAT BRACKET(REAR)	1	
11	TA00042804A	SMV BRACKET ASS'Y(ROPS)	1	
12	TZB9440000A3	TRAILERSOCKET	1	
13	26557-060352	SCREW,+GROOVE	3	

FIG C042 Branson 7845RP(US)	FRONT WHEEL & TIRE	Year/Month 2020/02

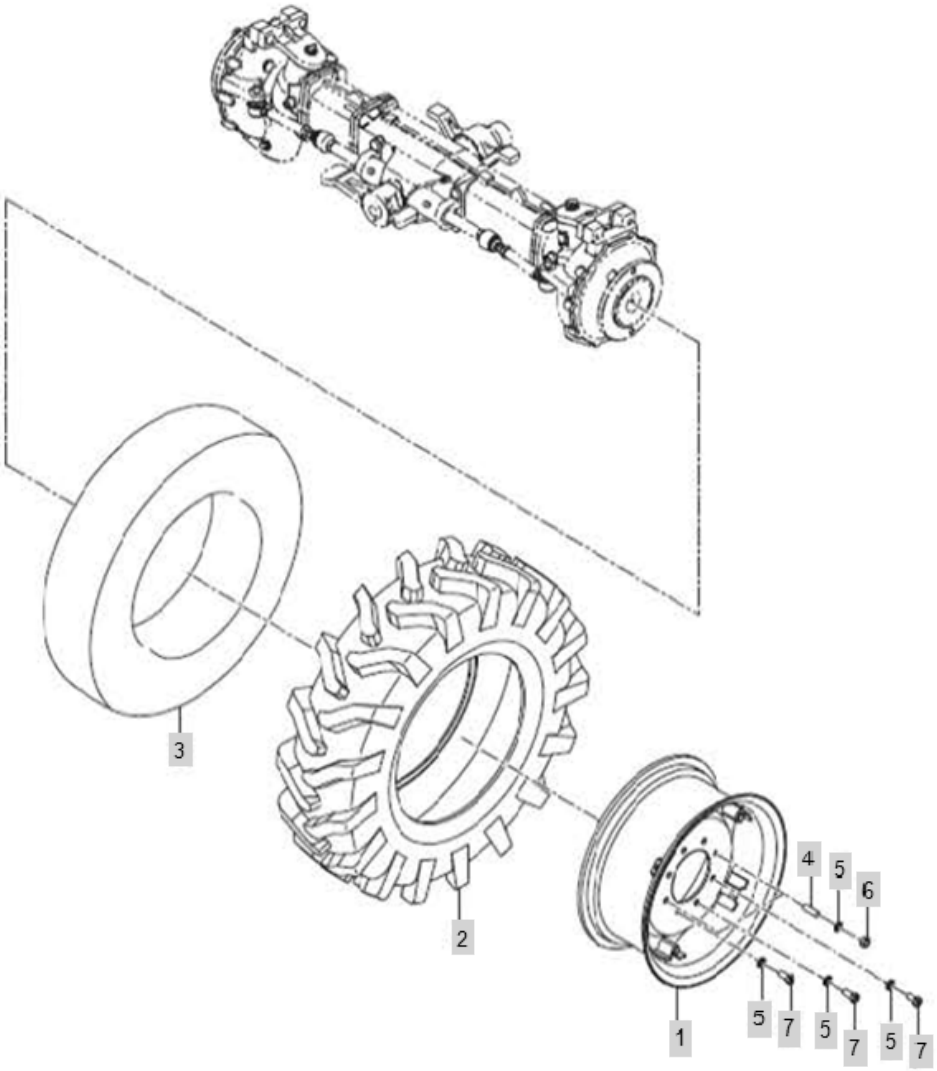

FIG C042 Branson 7845RP(US)	FRONT WHEEL & TIRE	Year/Month 2020/02

KeyNo.	Part Number	Part Name	Quantity	Other
1	TA00037581A	WHEEL ASSY(W10X24)	2	
2	TA00037579A	TIRE, 11.2-24 R1	2	
3	TJ10490000A9	TUBE(11.2-24)	2	
4	26236-160282	BOLT,STUD	4	
5	22217-160000	WASHER, SPRING (Φ 16)	16	
6	26736-160002	HEXNUT	4	
7	FT24400000A4	HexBolt	12	

FIG C043 Branson 7845RP(US)	REAR WHEEL & TIRE	Year/Month 2020/02

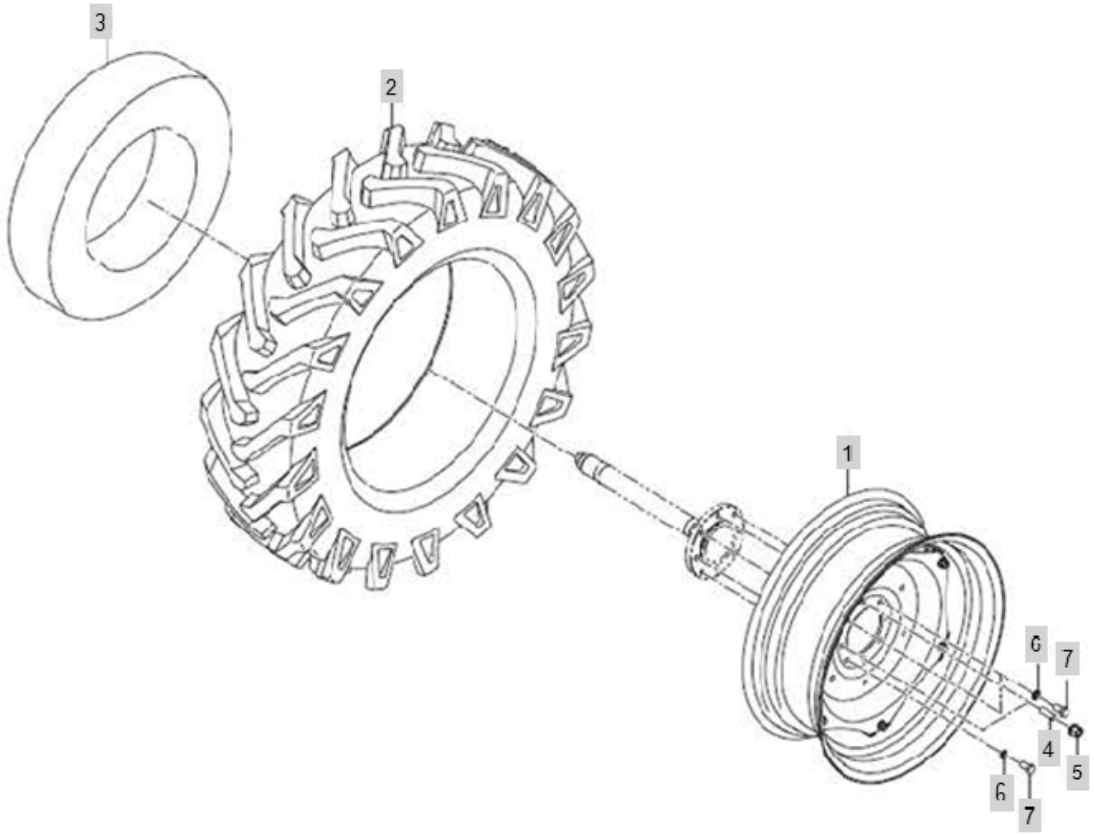

FIG C043 Branson 7845RP(US)	REAR WHEEL & TIRE	Year/Month 2020/02

KeyNo.	Part Number	Part Name	Quantity	Other
1	TA00034675B	WHEEL ASS'Y	2	
2	TA00037580A	TIRE, 16.9-30 R1	2	
3	THA3301021A9	TUBE	2	
4	TA00017975A	STUD BOLT(REAR)	4	
5	TA00017605A	FLANGE NUT	4	
6	22217-180000	WASHER, SPRING (Φ 18)	12	
7	TA00017466A	AXLE BOLT(FRONT)	12	

FIG C044 Branson 7845RP(US)	DASH BOARD	Year/Month 2020/02

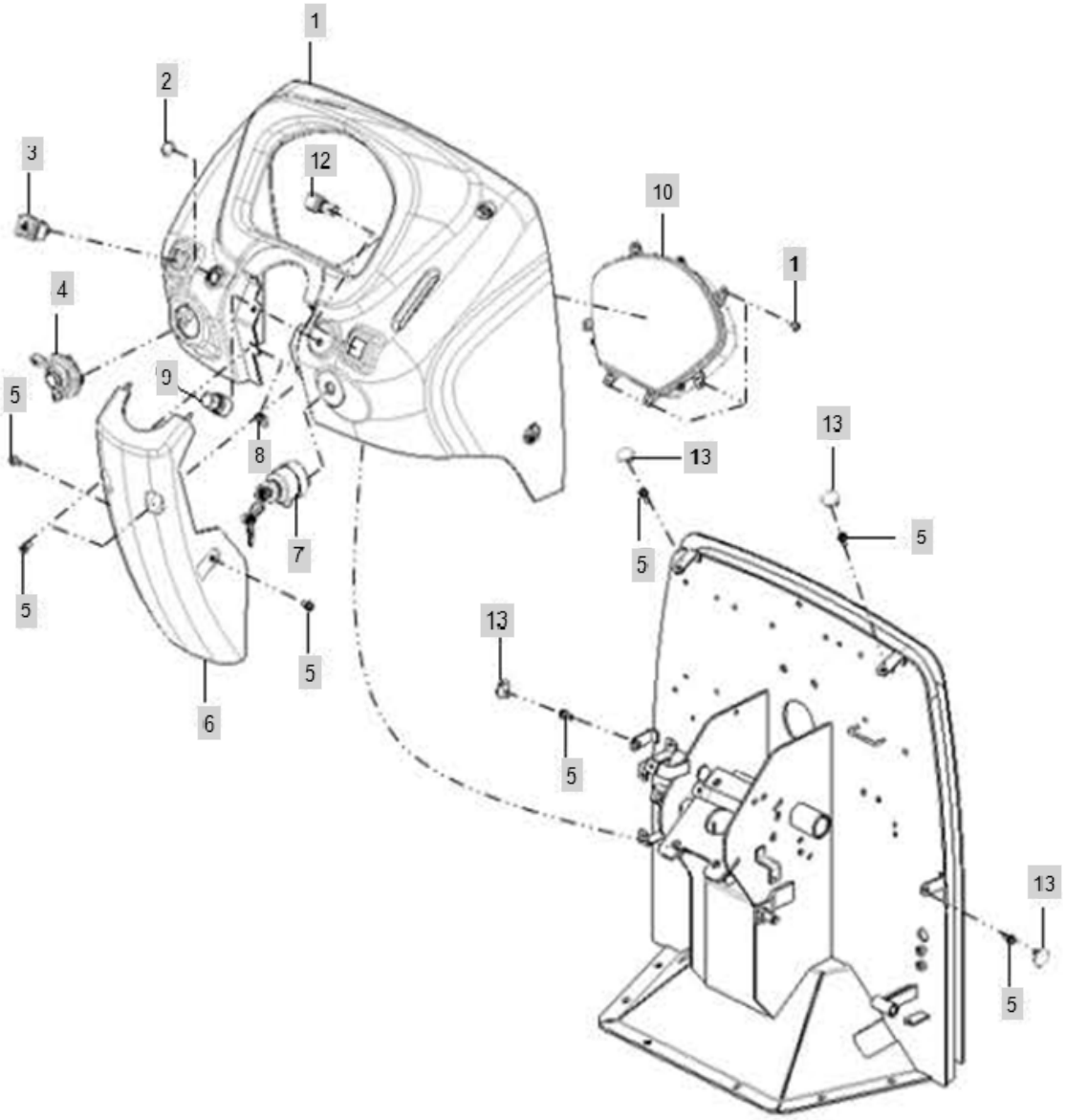

FIG C044 Branson 7845RP(US)	DASH BOARD	Year/Month 2020/02

KeyNo.	Part Number	Part Name	Quantity	Other
1	TA00039927A	DASH BOARD	1	
2	TA00041637A	CAP, SHUTTLE LEVER	1	
3	FBK3510000A3	EMERGENCY SWITCH	1	
4	HA00000067A	COMBINATION SWITCH	1	
5	26106-060182	Bolt, Hexa (6-18)	14	
6	TA00016444B	METER CLUSTER COVER_DO	1	
7	TTC5030000C3	IGNITION SWITCH	1	
8	TCE9150000A4	SPEEDNUTM6	2	
9	HA00001040A	4WD S/W	1	
10	HA00000815B	MATER LUXEN5	1	
11	TTD7090000A4	CROSSRECESSEDHEADTAPPINGSCREW	6	
12	HA00000972A	PTO SWITCH(K78_ROPS)	1	
13	TA00039429A	CAP	4	

FIG C045 Branson 7845RP(US)	FENDER ASS`Y	Year/Month 2020/02

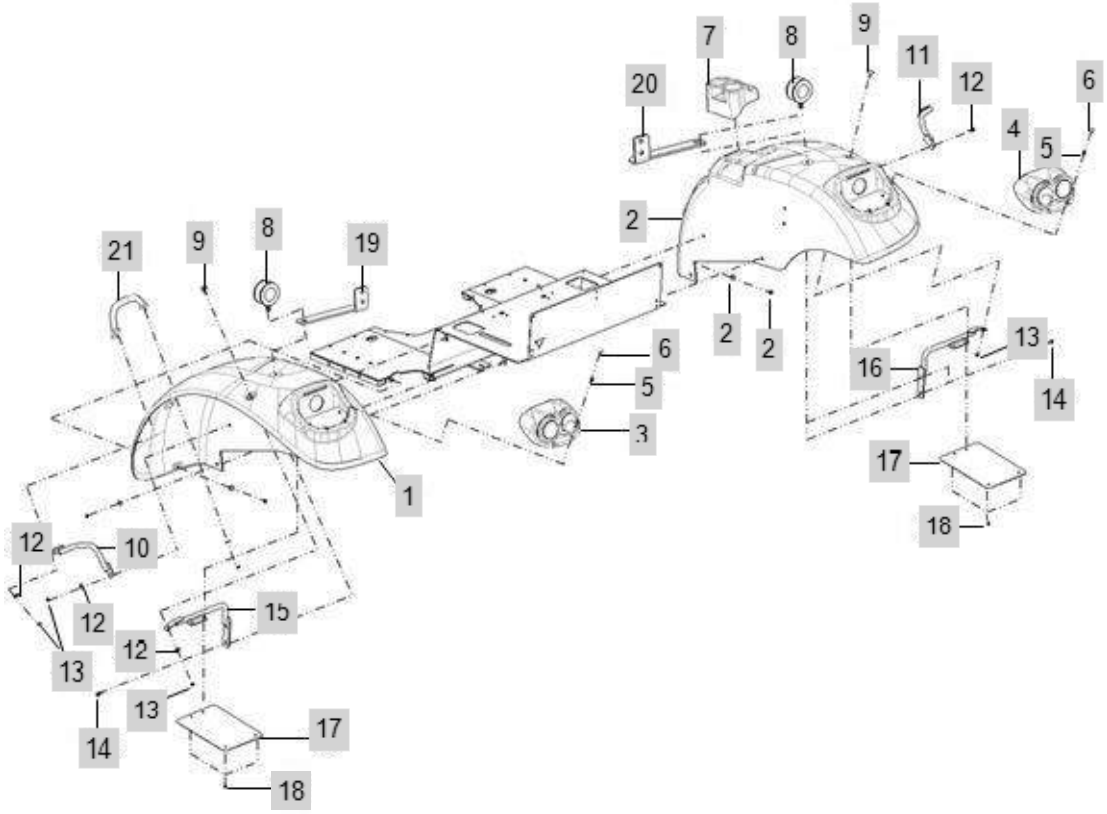

FIG C045 Branson 7845RP(US)	FENDER ASS`Y	Year/Month 2020/02

KeyNo.	Part Number	Part Name	Quantity	Other
1	TA00039300C	FENDER LH ASSY, FRP	1	
2	TA00039298C	FENDER RH ASSY, FRP	1	
3	HA00000971A	COMBLAMP L(K78_ROPS)	1	
4	HA00000970A	COMB LAMP R(K78)	1	
5	26106-060162	HEXFLANGEBOLT	8	
6	THA4303009A9	CAP	4	
7	TA00019128B	CUP HOLDER	1	
8	TZD2120000D		2	
9	TA00036493A	CUSION BOLT	2	
10	TA00041489A	FENDER FRONT SUPPORT-BRACKET(L)	1	
11	TA00041490A	FENDER FRONT SUPPORT-BRACKET(R)	1	
12	22157-080000	WASHER, PLAIN (Φ 08)	10	
13	26367-080002	HEX FLANGE NUT (Φ8)	4	
14	26106-080222	SCREW, HEX FLANGE HEAD CAP	10	
15	TA00039530A	SUPPORT ASSY LH, FENDER	1	
16	TA00039531A	SUPPORT ASSY RH, FENDER	1	
17	TA00039536A	PLATE	2	
18	26106-060122	HEX BOLT (6-12)	8	
19	TA00040571A	BRACKET(L), DIRECTIONAL LAMP	1	
20	TA00040572A	BRACKET(R), DIRECTIONAL LAMP	1	
21	FEB6070000A	HANDRAIL	1	

FIG C046 Branson 7845RP(US)	FOOT FRAME	Year/Month 2020/02

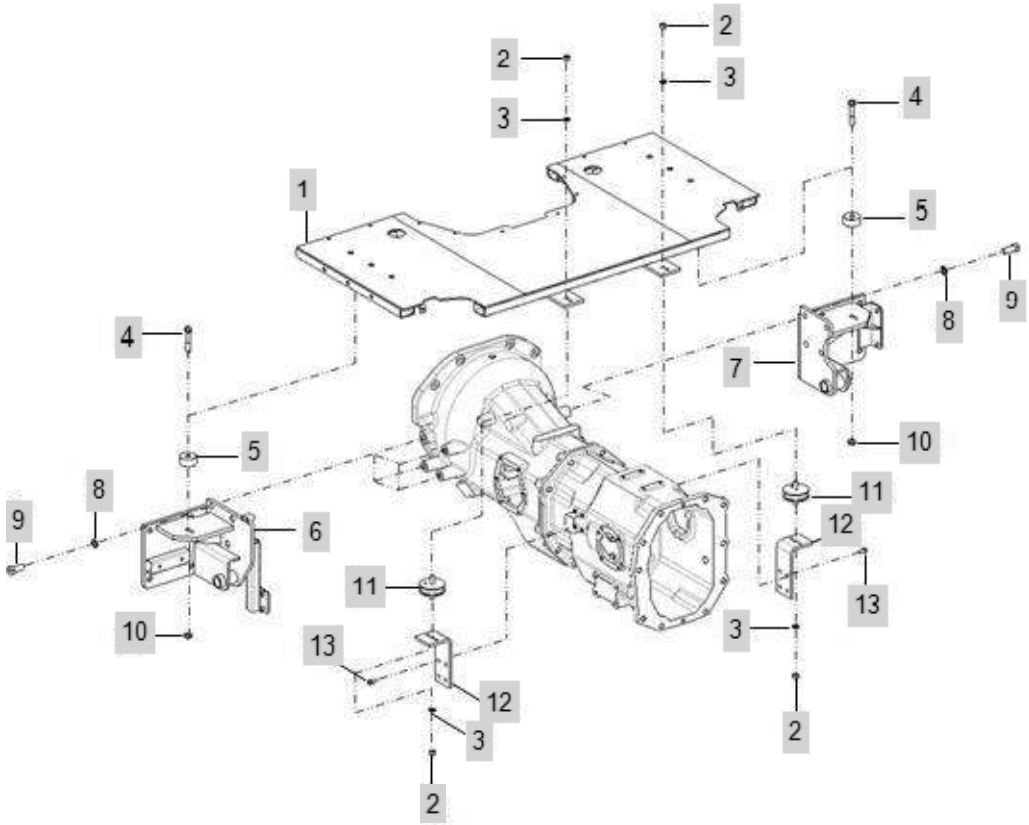

FIG C046 Branson 7845RP(US)	FOOT FRAME	Year/Month 2020/02

KeyNo.	Part Number	Part Name	Quantity	Other
1	TA00039733C	FRAME ASSY, FOOT	1	
2	26736-120002	NUT	4	
3	22217-120000	WASHER, SPRING (Φ 12)	4	
4	FGG6090000B	HEXAGON BOLT AND WASHER ASSEMBLIES	2	
5	TA00041568A	SPACER	2	
6	TA00040724B	CABIN BRACKET(L)	1	
7	TA00040725C	CABIN BRACKET(R)	1	
8	22217-160000	WASHER, SPRING (Φ 16)	8	
9	TA00018261A	BOLT	8	
10	26367-120002	NUT	2	
11	CA00004632A	RUBBER, CUSHION	2	
12	TA00039762A	BRACKET DOWN, MOUNTING	2	
13	26106-080202	SQR FLANGE BOLT	8	

FIG C047 Branson 7845RP(US)	HEAT INSULATOR ASS`Y	Year/Month 2020/02

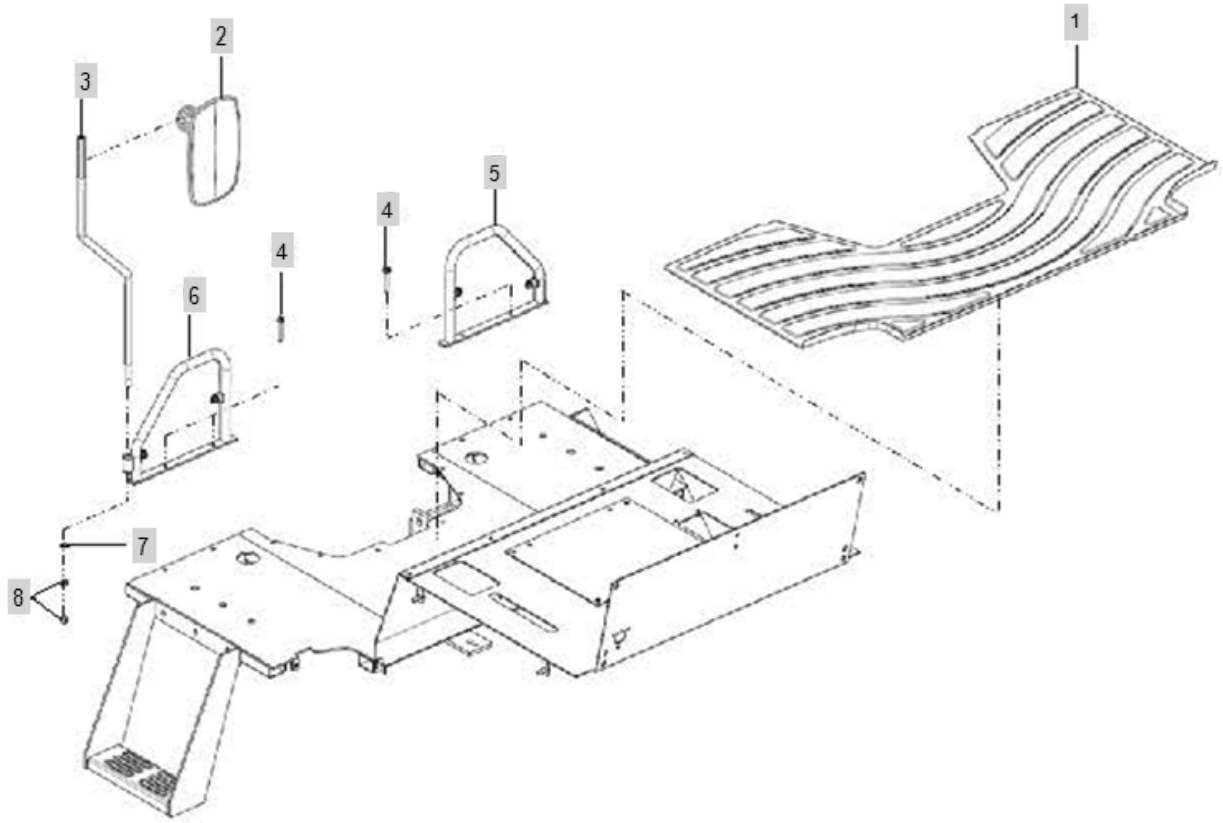

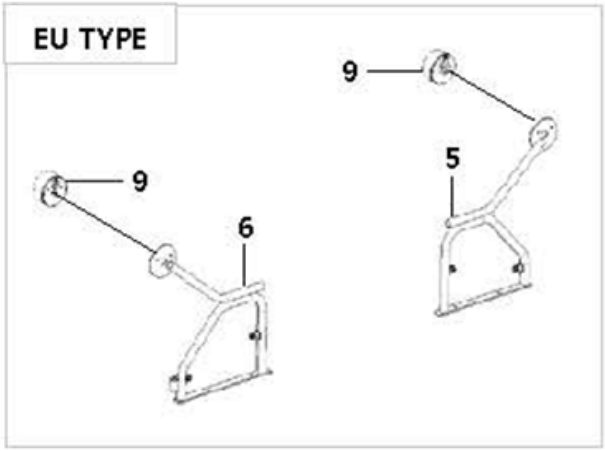

FIG C047 Branson 7845RP(US)	HEAT INSULATOR ASS`Y	Year/Month 2020/02

KeyNo.	Part Number	Part Name	Quantity	Other
1	TA00040289A	MAT, FOOT	1	
2	TCF5170000B3	SIDE MIRROR	1	
3	TA00041038A	STAY, BACK MIRROR	1	
4	26106-080502	SCREW,HEXFLANGEHEADCAP	4	
5	TA00041041A	HEAT INSULATOR ASS'Y(R)	1	
6	TA00041040A	HEAT INSULATOR ASS'Y(L)	1	
7	22217-100000	WASHER, SPRING (Φ 10)	1	
8	26736-100002	HEXNUT	2	

FIG C048 Branson 7845RP(US)	STOP-VALVE KNOB ASS`Y	Year/Month 2020/02

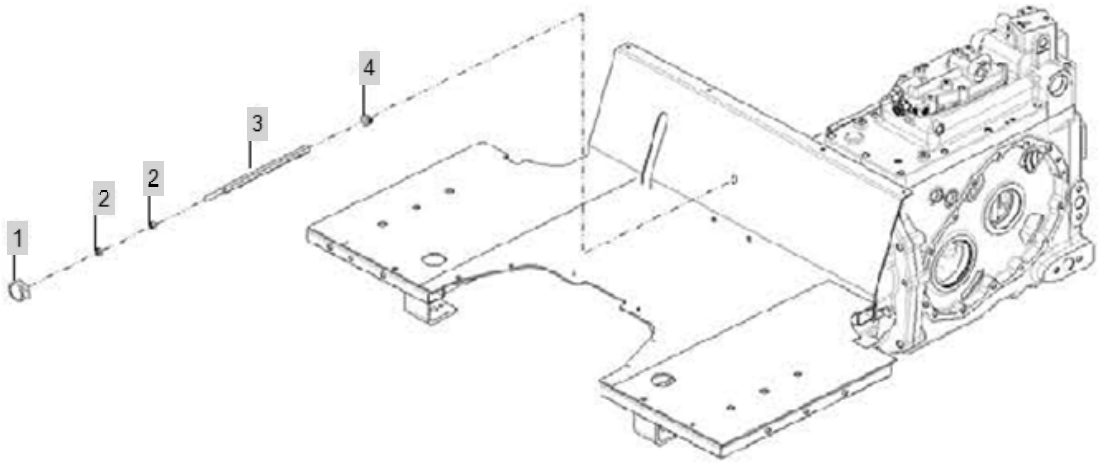

FIG C048 Branson 7845RP(US)	STOP-VALVE KNOB ASS`Y	Year/Month 2020/02

KeyNo.	Part Number	Part Name	Quantity	Other
1	TTA9040000A4	KNOB	1	
2	26716-100002	Nut, Hexa (Φ10)	2	
3	TA00040825A	CONNECT-BAR, STOP VALVE	1	
4	TCE2010000A4	GROMMET	1	

FIG C049.1-1 Branson 7845RP(US)	LABEL	Year/Month 2020/02

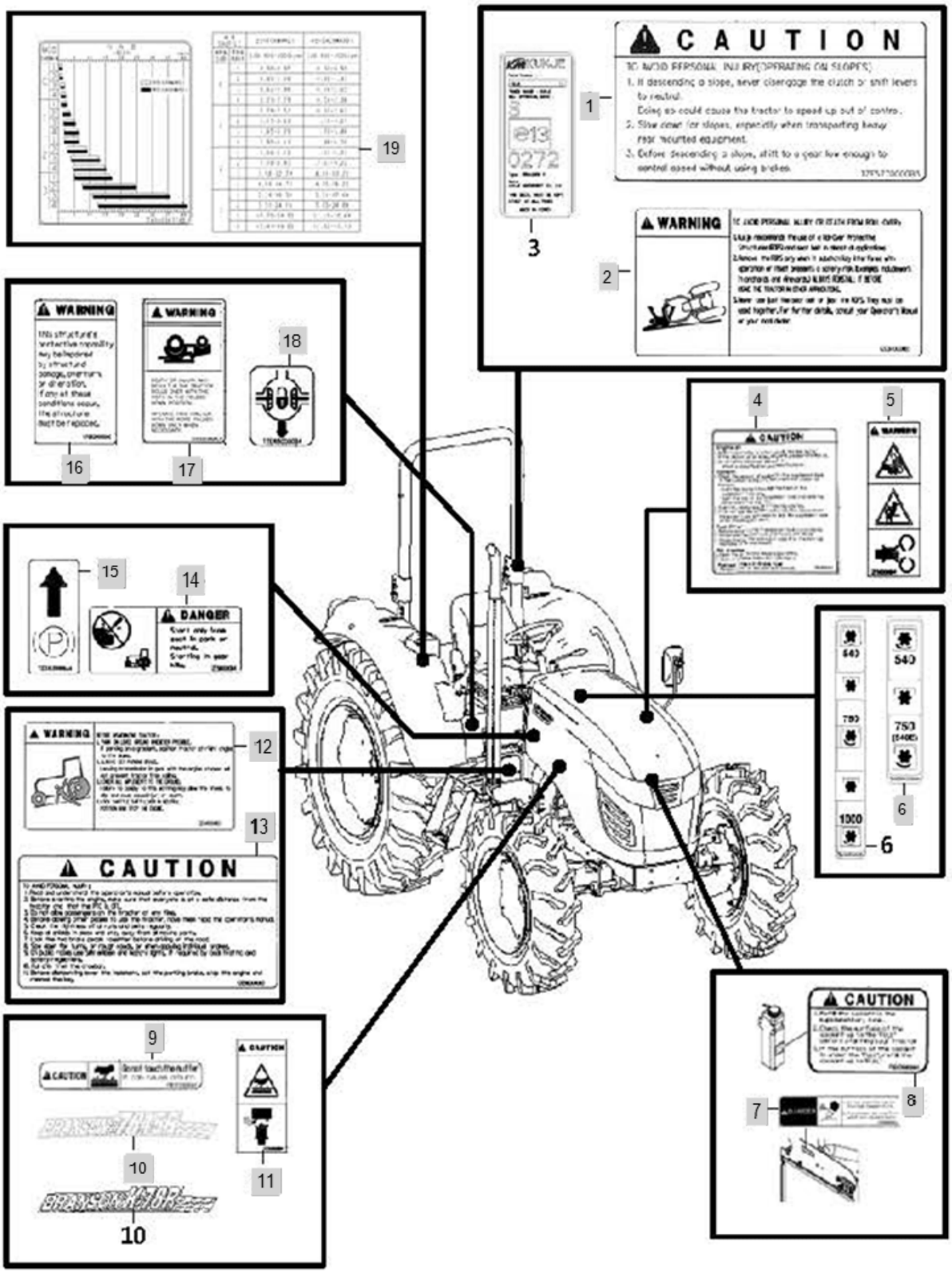

FIG C049.1-1 Branson 7845RP(US)	LABEL	Year/Month 2020/02

KeyNo.	Part Number	Part Name	Quantity	Other
1	TZE5770000B3	MARK,WARNING	1	
2	TZE5170000B3	NAME PLATE, ROPS CAUTION	1	
4	FBE4110000A3	Engine Treatment Name Plate	1	
5	TZE5180000C4	NAME PLATE, REVOLUTION	1	
6	TA00041306A	NAME PLATE, PTO SPEED	1	
7	FBE4580000A4	NAME PLATE, DANGER	1	
8	FBE4340000A4	Support Tank Nameplate	1	
9	FBE4570000A4	NAME PLATE, COUTION H	1	
10	TA00040444B	NAME PLATE, BONNET	2	
11	TZE5130000C4	NAME PLATE, CAUTION	1	
12	TZE5140000B3	NAME PLATE, DOWN LOAD	1	
13	TZE5160000B3	NAME PLATE, SAFETY	1	
14	TZE5110000C4	MANE PLATE, START	1	
15	TZE4150000A4	LABEL, PAKING BRAKE	1	
16	NTE5220000C4	NAMEPLATE,DANGER	1	
17	NTE5210000C4	NAMEPLATE,SAFETY	1	
18	TZE4130000B4	LABEL,DIFFERENTIAL	1	
19	TA00036774B	NAME PLATE, SPEED	1	
20	TA00037276A	NAME PLATE, SPEED	1	
21	TA00016783A	NAME PLATE, CAUTION	1	
22	TA00027098A	DECAL	1	
23	FBE4330000A4	NAME PLATE(KEY SWITCH)	1	
24	TZE4170000B4	LABEL,HYDLIFT	1	
25	TA00040443A	NAME PLATE, WARNING	1	
26	TZE5120000B4	NAME PLATE, EQUIP	1	
27	TZE4300000C4	NAME PLATE, PTO CAUTION	1	
28	FBE4300000A4	PTO Safety Cover Nameplate	1	
29	FBE4430000A4	NAME PLATE(COUTION)	1	
30	TZE4190000C4	LABEL, FUEL CAUTION	1	
31	TA00038791A	NAME PLATE, WARNING	1	
32	TA00040442B	NAME PLATE, MODEL	1	

FIG C049.1-2 Branson 7845RP(US)	LABEL(2019.04~)	Year/Month 2020/02

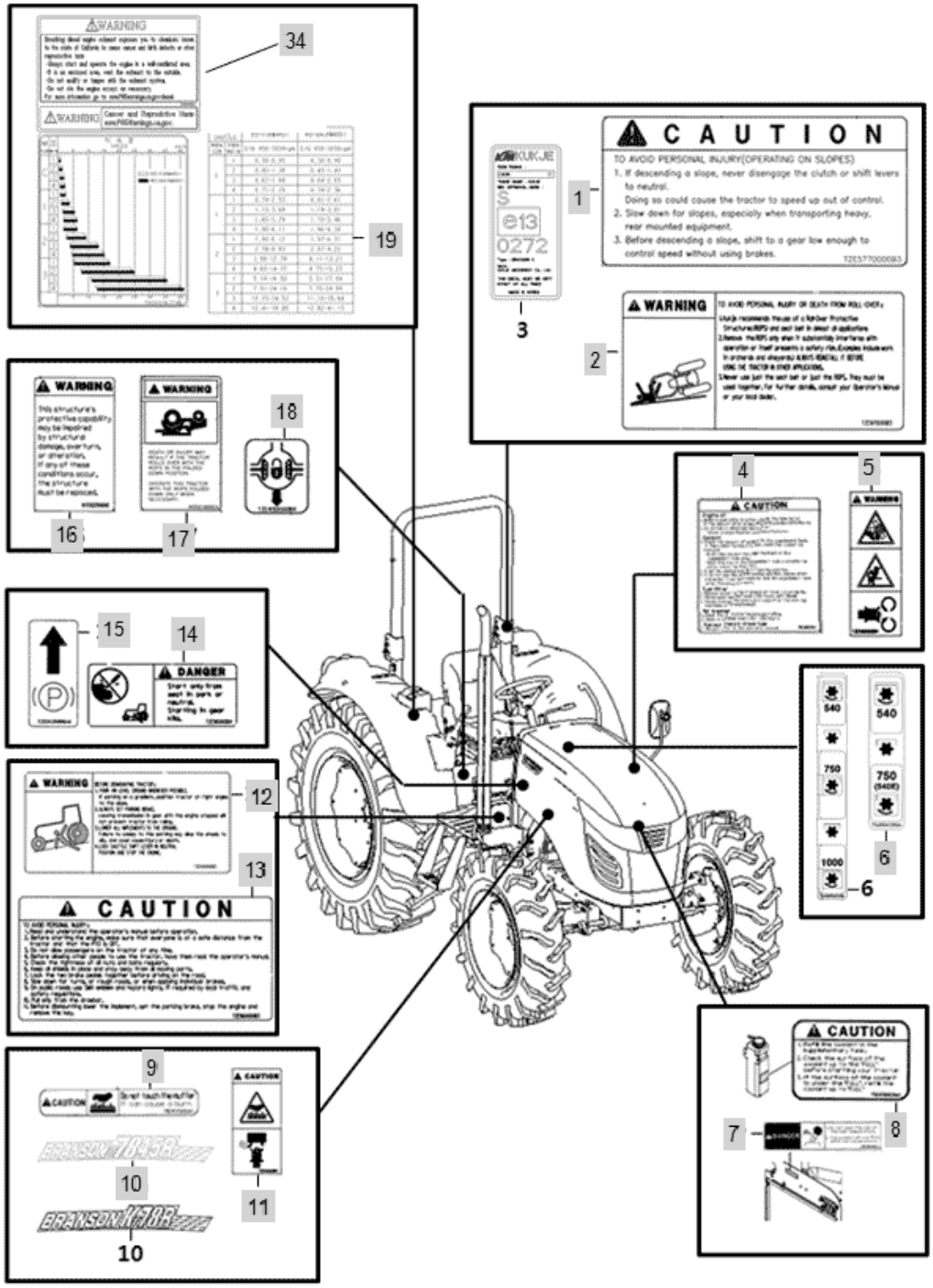

FIG C049.1-2 Branson 7845RP(US)	LABEL(2019.04~)	Year/Month 2020/02

KeyNo.	Part Number	Part Name	Quantity	Other
1	TZE5770000B3	MARK,WARNING	1	
2	TZE5170000B3	NAME PLATE, ROPS CAUTION	1	
4	FBE4110000A3	Engine Treatment Name Plate	1	
5	TZE5180000C4	NAME PLATE, REVOLUTION	1	
6	TA00041306A	NAME PLATE, PTO SPEED	1	
7	FBE4580000A4	NAME PLATE, DANGER	1	
8	FBE4340000A4	Support Tank Nameplate	1	
9	FBE4570000A4	NAME PLATE, COUTION H	1	
10	TA00040444B	NAME PLATE, BONNET	2	
11	TZE5130000C4	NAME PLATE, CAUTION	1	
12	TZE5140000B3	NAME PLATE, DOWN LOAD	1	
13	TZE5160000B3	NAME PLATE, SAFETY	1	
14	TZE5110000C4	MANE PLATE, START	1	
15	TZE4150000A4	LABEL, PAKING BRAKE	1	
16	NTE5220000C4	NAMEPLATE,DANGER	1	
17	NTE5210000C4	NAMEPLATE,SAFETY	1	
18	TZE4130000B4	LABEL,DIFFERENTIAL	1	
19	TA00036774B	NAME PLATE, SPEED	1	
20	TA00037276A	NAME PLATE, SPEED	1	
21	TA00016783A	NAME PLATE, CAUTION	1	
22	TA00027098A	DECAL	1	
23	FBE4330000A4	NAME PLATE(KEY SWITCH)	1	
24	TZE4170000B4	LABEL,HYDLIFT	1	
25	TA00040443A	NAME PLATE, WARNING	1	
26	TZE5120000B4	NAME PLATE, EQUIP	1	
27	TZE4300000C4	NAME PLATE, PTO CAUTION	1	
28	FBE4300000A4	PTO Safety Cover Nameplate	1	
29	FBE4430000A4	NAME PLATE(COUTION)	1	
30	TZE4190000C4	LABEL, FUEL CAUTION	1	
31	TA00038791A	NAME PLATE, WARNING	1	
32	TA00040442B	NAME PLATE, MODEL	1	
34	TA00059067A	PROPOSITION 65 WARNING LABEL 1	1	

FIG C049.2 Branson 7845RP(US)	LABEL	Year/Month 2020/02

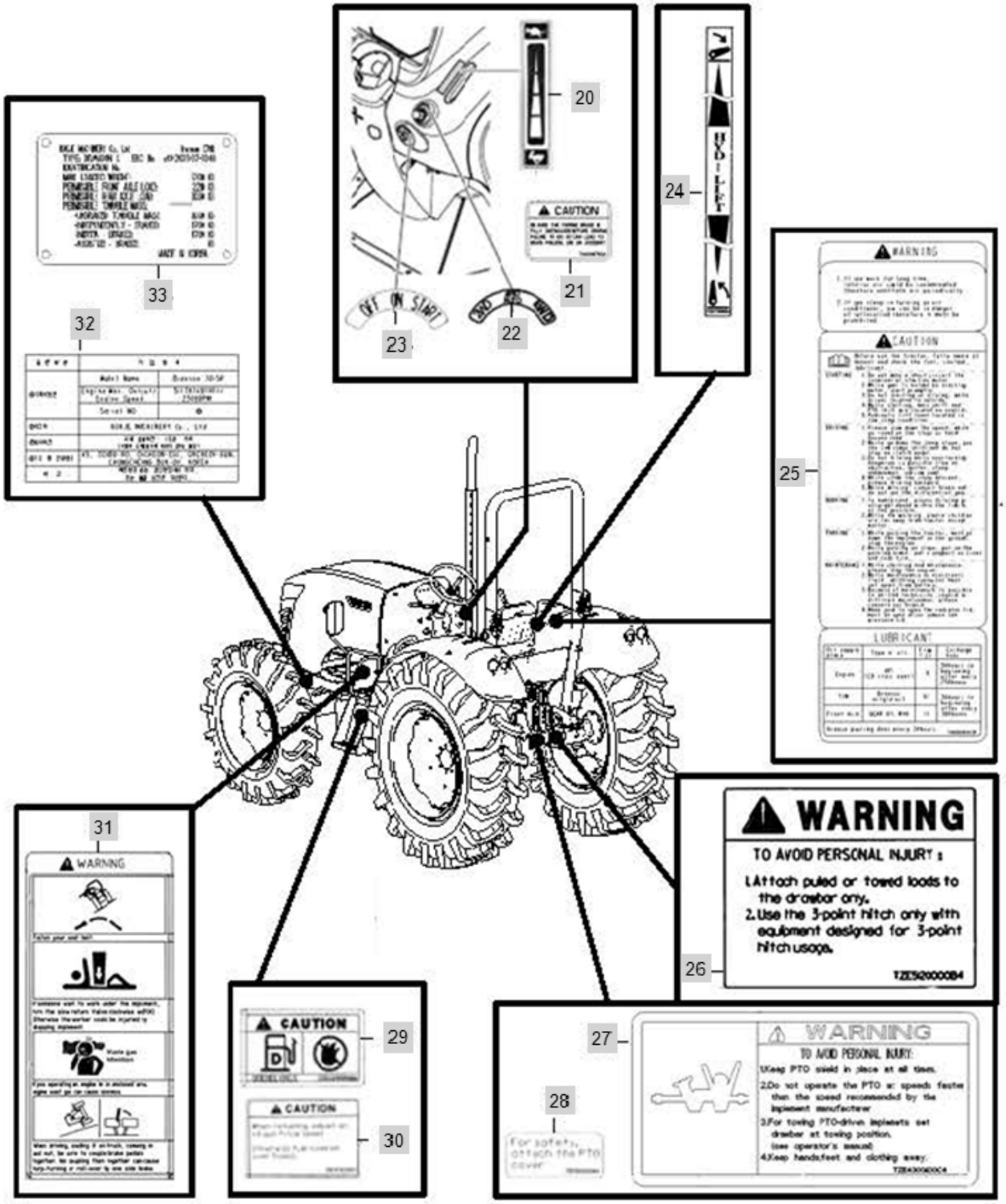

FIG C049.2 Branson 7845RP(US)	LABEL	Year/Month 2020/02

KeyNo.	Part Number	Part Name	Quantity	Other
1	TZE5770000B3	MARK,WARNING	1	
2	TZE5170000B3	NAME PLATE, ROPS CAUTION	1	
4	FBE4110000A3	Engine Treatment Name Plate	1	
5	TZE5180000C4	NAME PLATE, REVOLUTION	1	
6	TA00041306A	NAME PLATE, PTO SPEED	1	
7	FBE4580000A4	NAME PLATE, DANGER	1	
8	FBE4340000A4	Support Tank Nameplate	1	
9	FBE4570000A4	NAME PLATE, COUTION H	1	
10	TA00040444B	NAME PLATE, BONNET	2	
11	TZE5130000C4	NAME PLATE, CAUTION	1	
12	TZE5140000B3	NAME PLATE, DOWN LOAD	1	
13	TZE5160000B3	NAME PLATE, SAFETY	1	
14	TZE5110000C4	MANE PLATE, START	1	
15	TZE4150000A4	LABEL, PAKING BRAKE	1	
16	NTE5220000C4	NAMEPLATE,DANGER	1	
17	NTE5210000C4	NAMEPLATE,SAFETY	1	
18	TZE4130000B4	LABEL,DIFFERENTIAL	1	
19	TA00036774B	NAME PLATE, SPEED	1	
20	TA00037276A	NAME PLATE, SPEED	1	
21	TA00016783A	NAME PLATE, CAUTION	1	
22	TA00027098A	DECAL	1	
23	FBE4330000A4	NAME PLATE(KEY SWITCH)	1	
24	TZE4170000B4	LABEL,HYDLIFT	1	
25	TA00040443A	NAME PLATE, WARNING	1	
26	TZE5120000B4	NAME PLATE, EQUIP	1	
27	TZE4300000C4	NAME PLATE, PTO CAUTION	1	
28	FBE4300000A4	PTO Safety Cover Nameplate	1	
29	FBE4430000A4	NAME PLATE(COUTION)	1	
30	TZE4190000C4	LABEL, FUEL CAUTION	1	
31	TA00038791A	NAME PLATE, WARNING	1	
32	TA00040442B	NAME PLATE, MODEL	1	
34	TA00059067A	PROPOSITION 65 WARNING LABEL 1	1	

FIG C050 Branson 7845RP(US)	HARNESS	Year/Month 2020/02

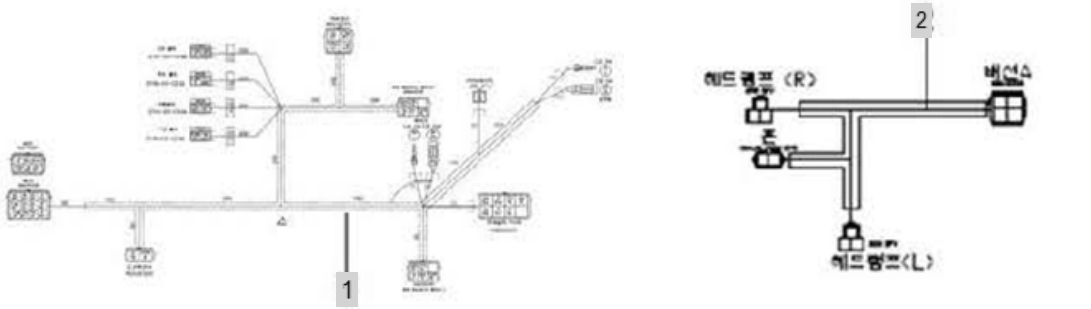

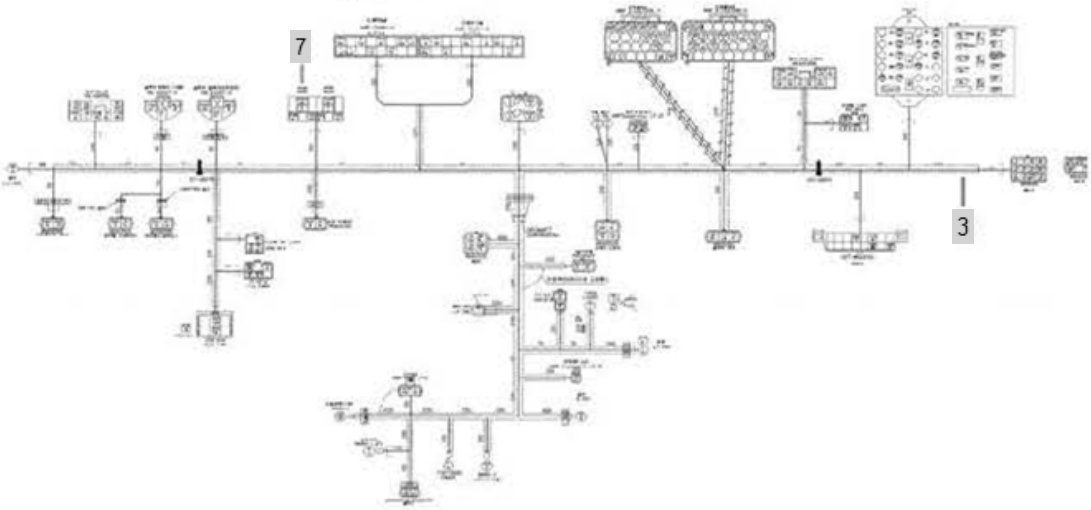

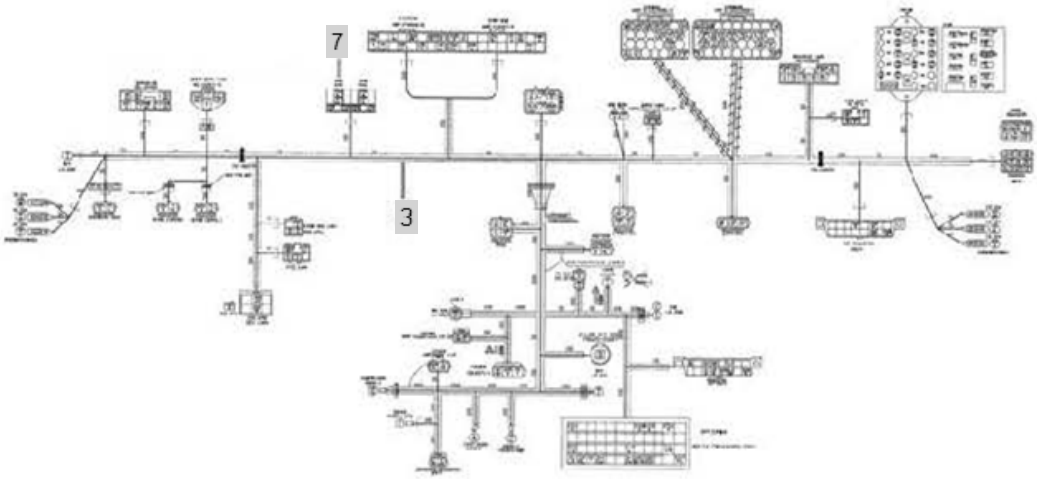

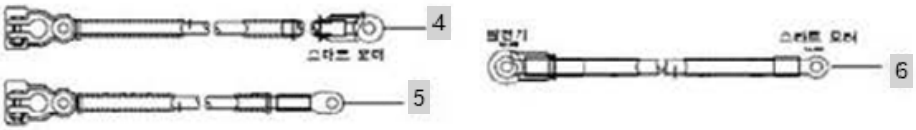

FIG C050 Branson 7845RP(US)	HARNESS	Year/Month 2020/02

KeyNo.	Part Number	Part Name	Quantity	Other
1	HA00001032B	HARNESS B	1	
2	HA00000814A	HARNESS G	1	
3	HA00001031B	HARNESS E	1	
4	HA00001035A	+CABLE	1	
5	HA00000136C	(-)Cable	1	
6	HA00000866A	HARNESS A	1	
7	HA00000810A	MINI ISO RELAY	2	

FIG C051 Branson 7845RP(US)	SPARE TOOLS	Year/Month 2020/02

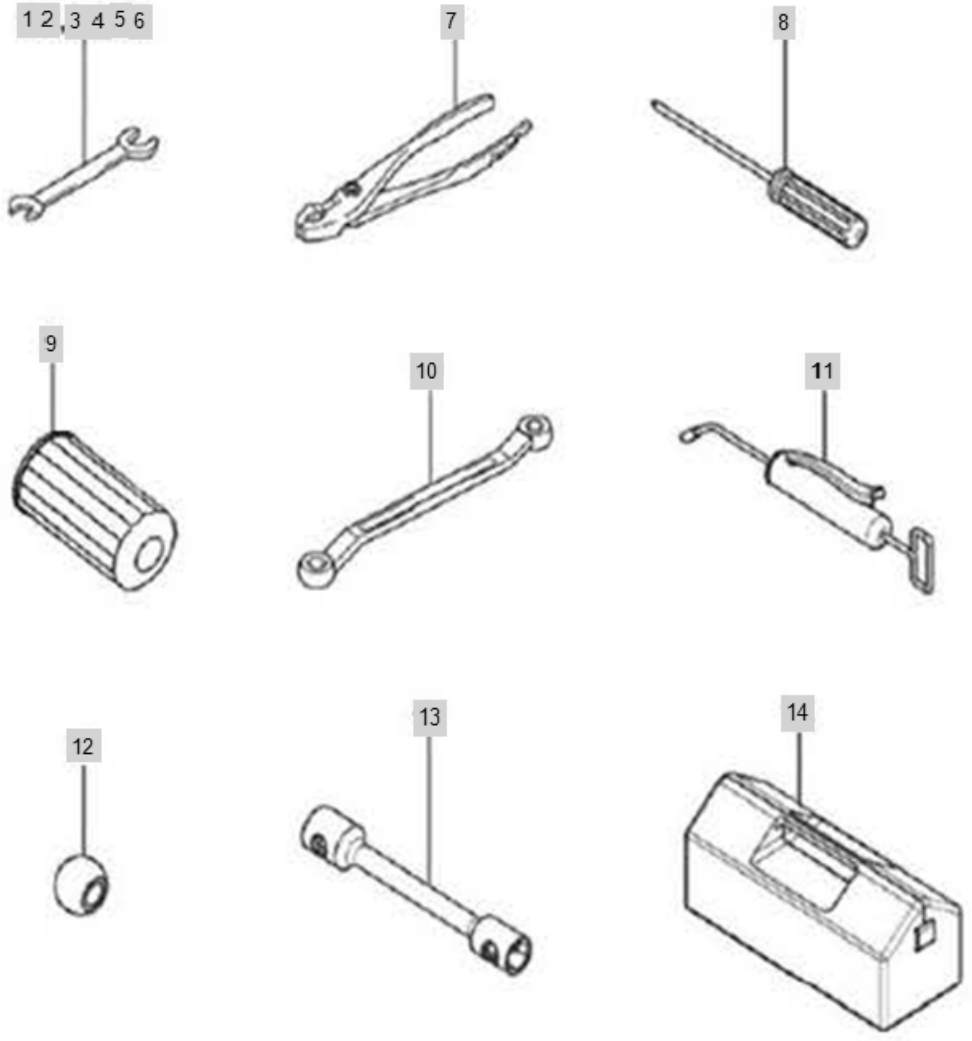

FIG C051 Branson 7845RP(US)	SPARE TOOLS	Year/Month 2020/02

KeyNo.	Part Number	Part Name	Quantity	Other
1	28110-080100	WRENCH8X10	1	
2	28110-120140	WRENCH12*14	1	
3	28110-170190	WRENCH17*19	1	
4	28110-220240	WRENCH22*24	1	
5	28110-260320	SPANNER	1	
6	28110-270300	WRENCH	1	
7	28170-001500	PLIER200	1	
8	TA00046710A	DRIVER	1	
9	FTB8030000C9	FILTER, HYDRAULIC OIL (30/40 SERIES)	1	
10	TB47060000A4	BOX WRENCH	1	
11	TB47100000B2	GREASE GUN	1	
12	TH25230000A4	BALL	2	
13	TJ10210000A3		1	
14	TJ26040000A9	TOOLBOX	1	
15	TTH0590000A9	RING, KEY	1	

FIG E001 Branson 7845RP(US)	CYLINDER BLOCK	Year/Month 2020/02

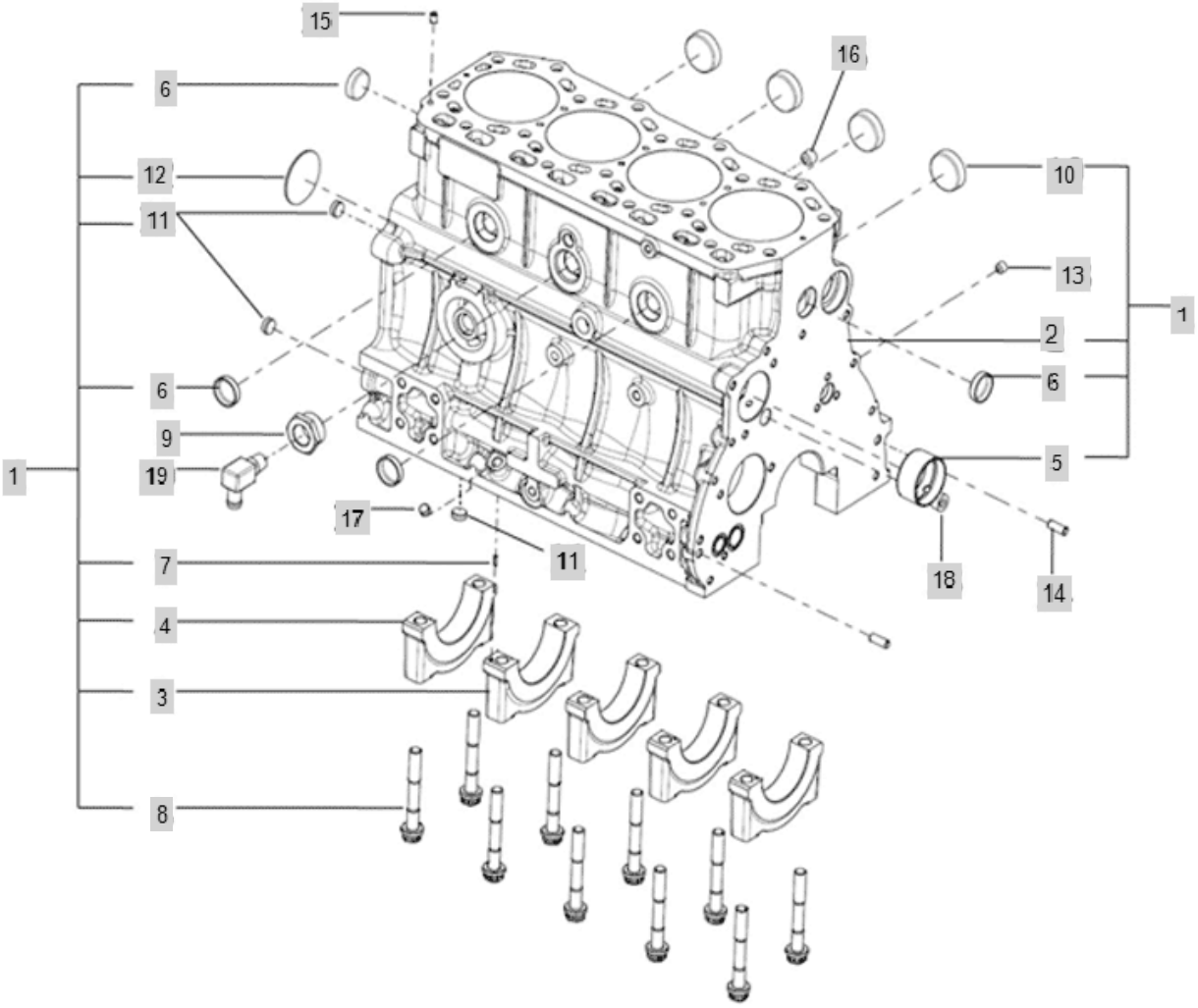

FIG E001 Branson 7845RP(US)	CYLINDER BLOCK	Year/Month 2020/02

KeyNo.	Part Number	Part Name	Quantity	Other
1	EA00002755A	CYL. BLOCK SUB ASS'Y	1	
2	EA00000110I	CYLINDER, BLOCK	1	
3	EA00001847A	CAP,MAIN BEARING	1	
4	EA00001848A	CAP, MAIN BEARING #4	4	
5	EA00000113A	Bush (Cam Shaft)	1	
6	27241-300000	PLUG (D30)	4	
7	22351-030010	PIN, SPRING (3-01)	1	
8	EA00000114A	BOLT	10	
9	EA00002756A	ADAPTOR(1), BLOCK HEATER	1	
10	27241-400000	PLUG (D40)	4	
11	EA00000115A	PLUG (D15)	3	
12	27231-550000	PLUG-DISH TYPE	1	
13	23871-010000	PLUG	1	
14	22312-080200	PIN, DOWEL (8-20)	2	
15	HRA0100800A4	PIN,OIL	1	
16	23871-020000	Plug, Pipe	1	
17	HRT0300500A4	PLUG,EXPANSION	1	
18	23871-030000	PLUG, PIPE	1	
19	TA00040425A	ELBOW	1	

FIG E002 Branson 7845RP(US)	V-PULLY_CRANK SHAFT	Year/Month 2020/02

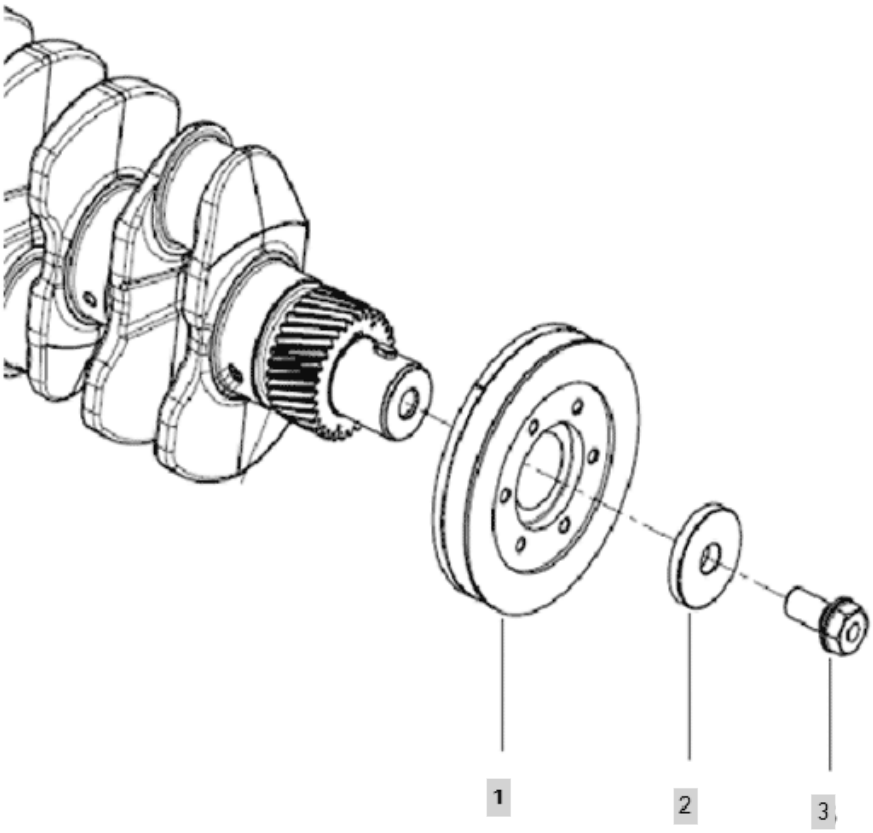

FIG E002 Branson 7845RP(US)	V-PULLY_CRANK SHAFT	Year/Month 2020/02

KeyNo.	Part Number	Part Name	Quantity	Other
1	EA00003790A	PULLY(CRANK)	1	
2	EA00000119A	WASHER (V-PULLEY)	1	
3	EA00000120A	SCREW,HEX FLANGE HEAD CAP	1	

FIG E003 Branson 7845RP(US)	AIR HEATER	Year/Month 2020/02

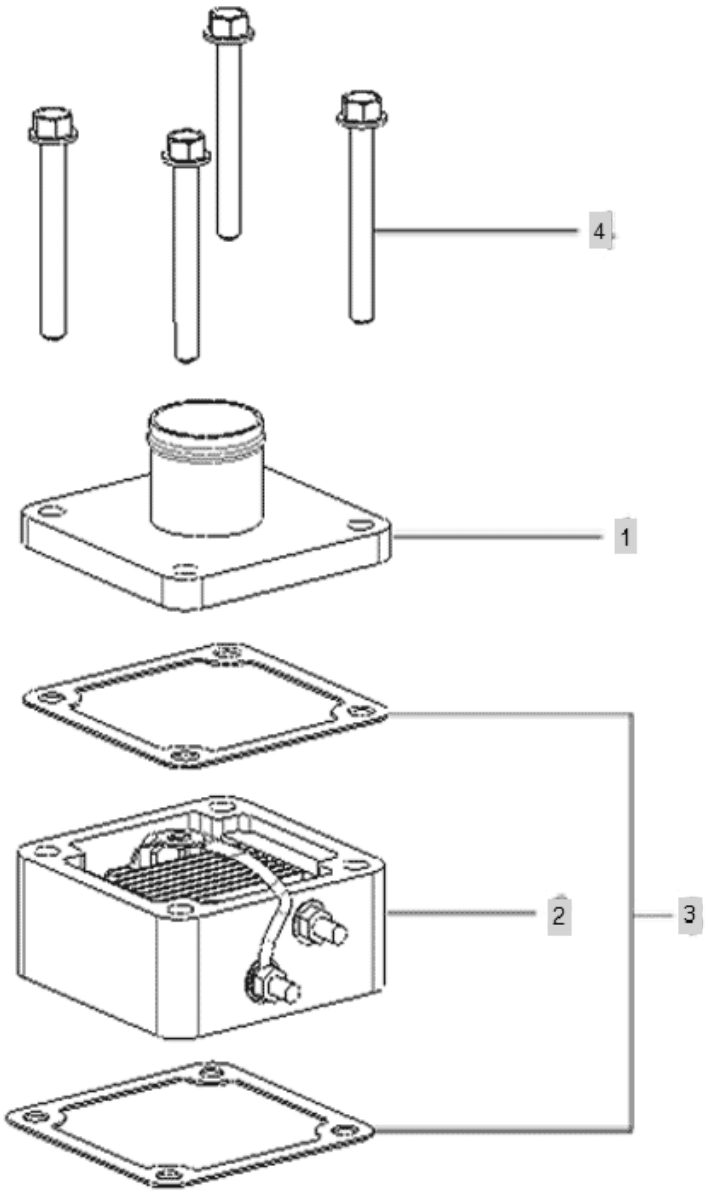

FIG E003 Branson 7845RP(US)	AIR HEATER	Year/Month 2020/02

KeyNo.	Part Number	Part Name	Quantity	Other
1	EA00001034A	COVER(AIR HEATER)	1	
2	EA00001033B	AIR HEATER (2.1KW)	1	
3	EA00001035A	PACKING(AIR HEATER)	2	
4	26106-080752	SCREW,HEXFLANGEHEADCAP	4	

FIG E004 Branson 7845RP(US)	APPROVAL, AGENCY	Year/Month 2020/02

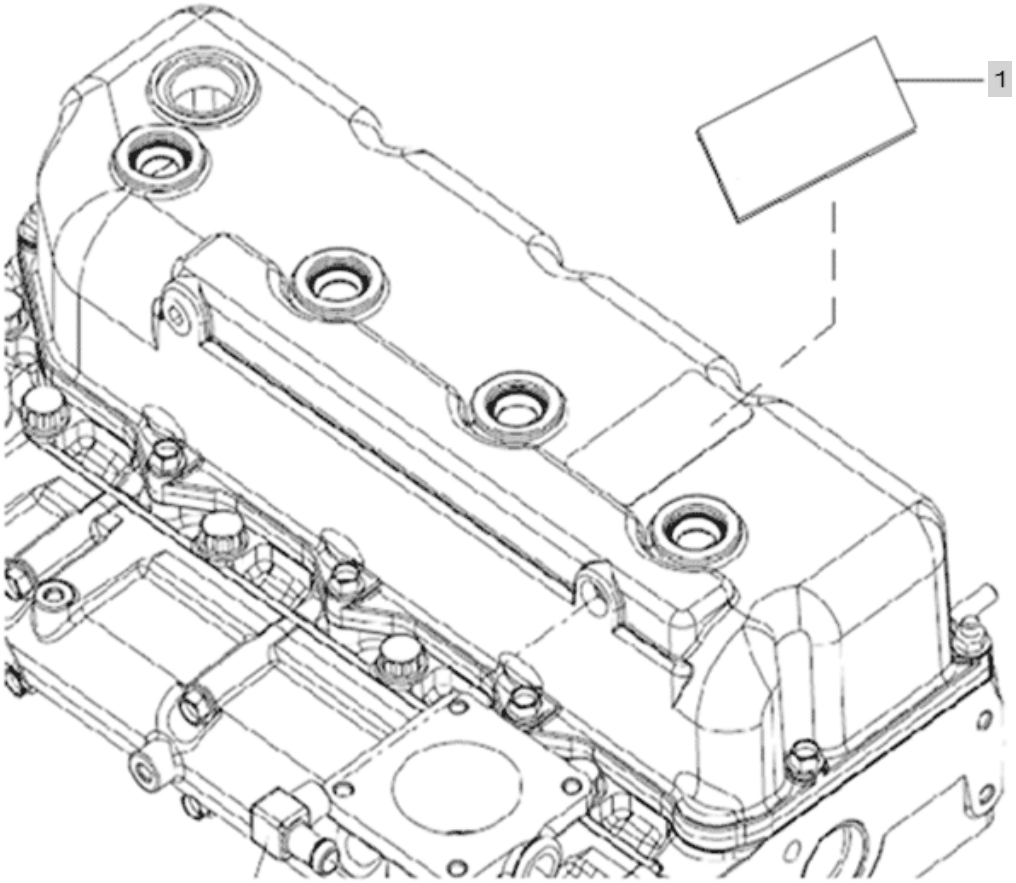

FIG E004 Branson 7845RP(US)	APPROVAL, AGENCY	Year/Month 2020/02

KeyNo.	Part Number	Part Name	Quantity	Other
1	EA00003736A	DATA PLATE	1	

FIG E005 Branson 7845RP(US)	CRANK SHAFT	Year/Month 2020/02

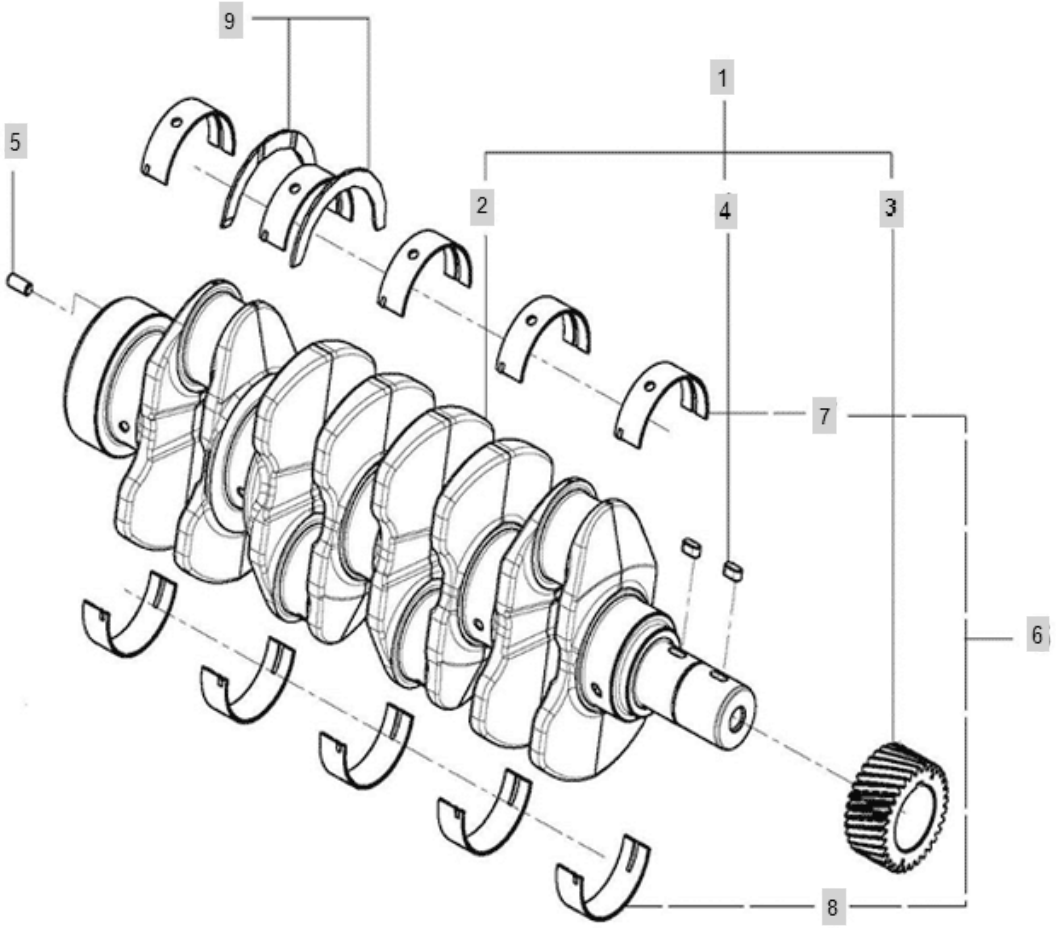

FIG E005 Branson 7845RP(US)	CRANK SHAFT	Year/Month 2020/02

KeyNo.	Part Number	Part Name	Quantity	Other
1	EA00000125B	CRANKSHAFT ASSY	1	
2	EA00000126B	CRANKSHAFT	1	
3	EA00000127A	GEAR (CRANKSHAFT)	1	
4	22512-070140	KEY, SLIDING (07-14)	2	
5	22312-080160	PIN, DOWEL (8-16)	1	
6	EA00000128A	BEARING,MAIN -> EA00000129A+EA0000131A	1	
7	EA00000129A	BEARING,MAIN UPPER	5	
8	EA00000131A	BEARING,MAIN LOWER	5	
9	EA00000132A	BEARING,CRANKSHAFT THRUST UPR	2	

FIG E006 Branson 7845RP(US)	BREATHER, CRANKCASE	Year/Month 2020/02

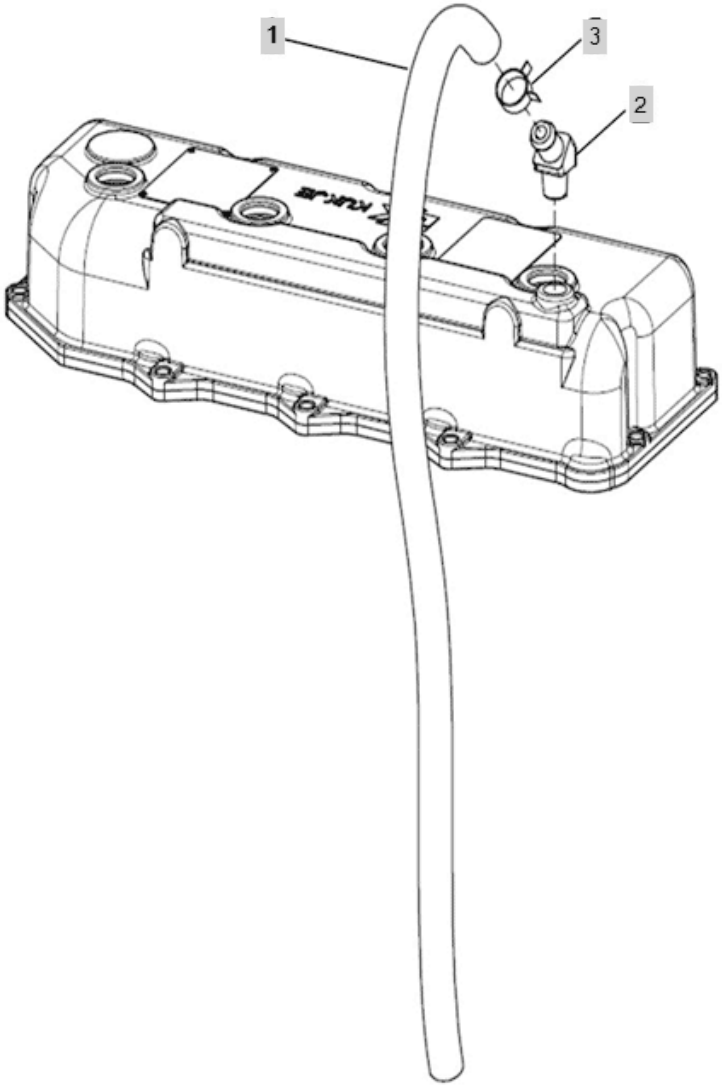

FIG E006 Branson 7845RP(US)	BREATHER, CRANKCASE	Year/Month 2020/02

KeyNo.	Part Number	Part Name	Quantity	Other
1	EA00001474A	BREATHER HOSE	1	
2	EA00001054A	ELBOW13PTF3/8	1	
3	23080-021000	CLAMP,VBAND	1	

FIG E007 Branson 7845RP(US)	CAMSHAFT	Year/Month 2020/02

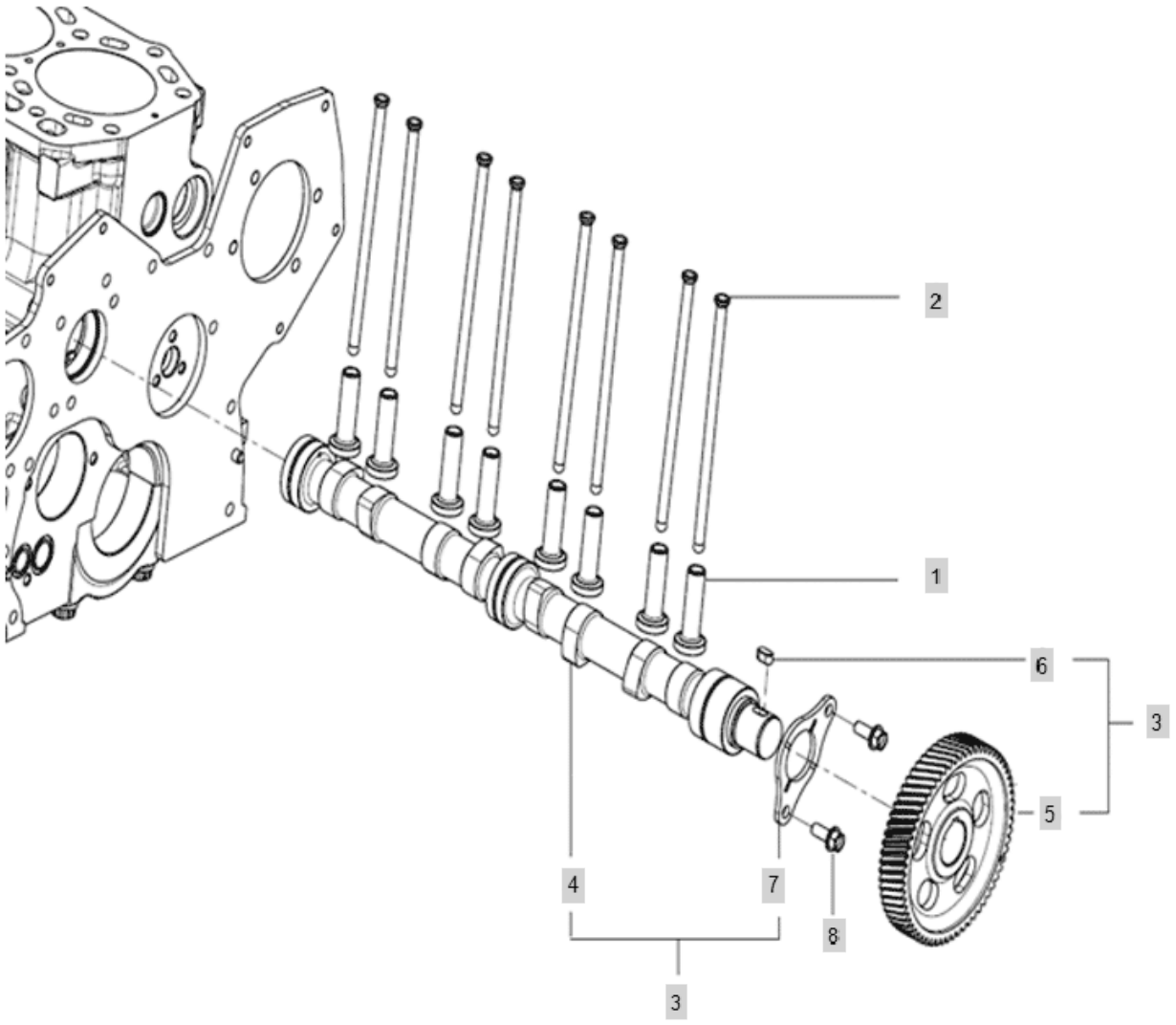

FIG E007 Branson 7845RP(US)	CAMSHAFT	Year/Month 2020/02

KeyNo.	Part Number	Part Name	Quantity	Other
1	HH08060000B4	TAPPET,VALVE	8	
2	EA00003018A	PUSH ROD(HOLLOW)	8	
3	EA00000137A	CAMSHAFT ASSY	1	
4	EA00000138C	CAMSHAFT	1	
5	EA00000139B	GEAR,CAMSHAFT	1	
6	22512-070140	KEY, SLIDING (07-14)	1	
7	EA00000140A	BEARING,CAMSHAFT THRUST	1	
8	26106-080202	SQR FLANGE BOLT	2	

FIG E008 Branson 7845RP(US)	FRONT GEAR ACCESSORY DRIVE	Year/Month 2020/02

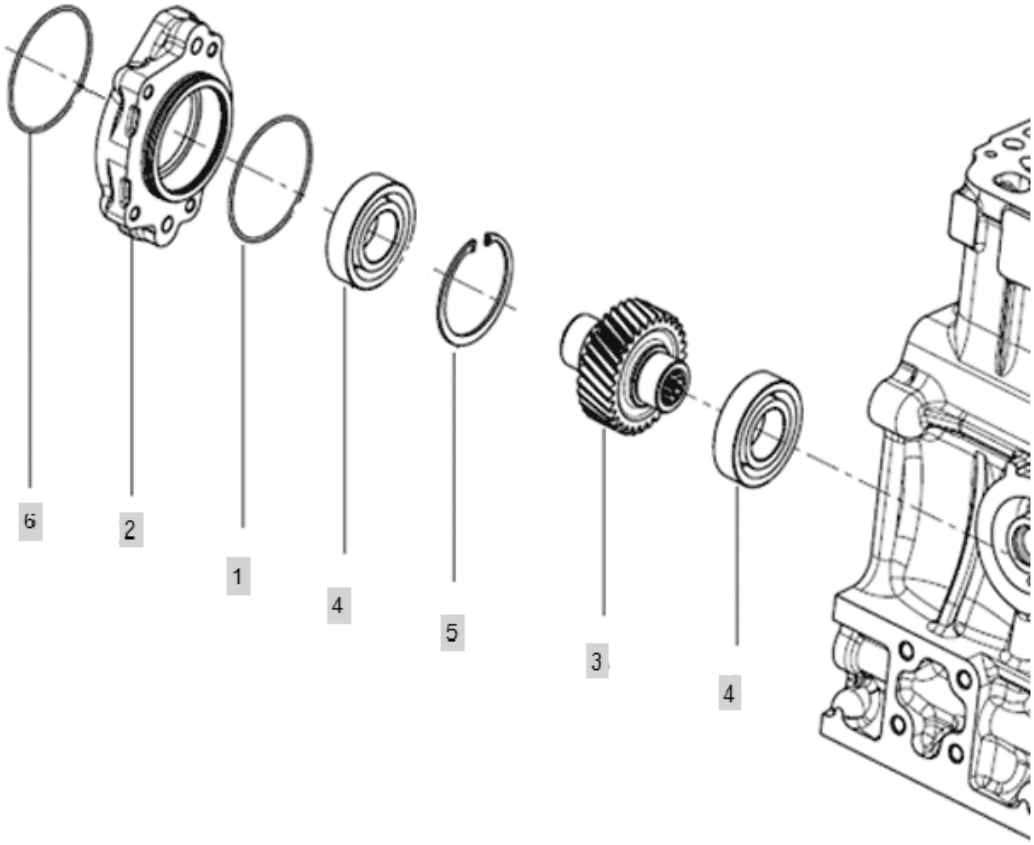

FIG E008 Branson 7845RP(US)	FRONT GEAR ACCESSORY DRIVE	Year/Month 2020/02

KeyNo.	Part Number	Part Name	Quantity	Other
1	24341-000700	O-RING, FIX (Φ70)	1	
2	EA00000142B	HOUSING,POWER TAKE OFF	1	
3	EA00000143A	GEAR,HYD. PUMP DRIVE	1	
4	24101-062064	BALL BEARING (#6206)	2	
5	22252-000620	RING, CIRCLIP (Φ 62)	1	
6	24321-000850	ORING(G85)	1	

FIG E009 Branson 7845RP(US)	IDLE GEAR	Year/Month 2020/02

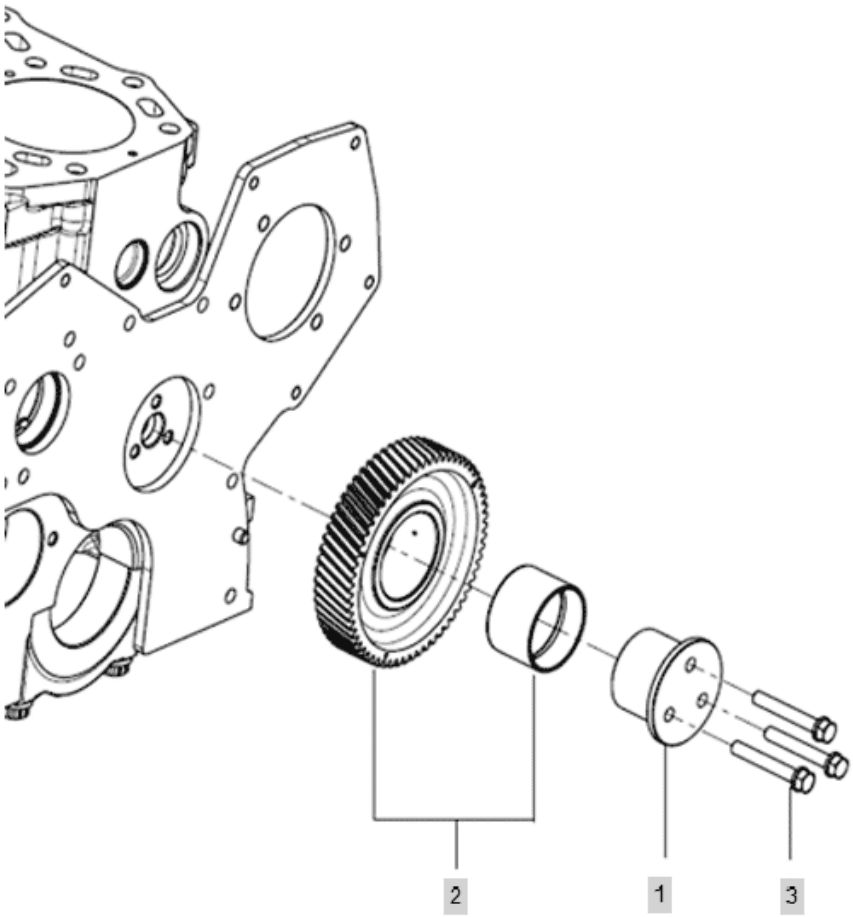

FIG E009 Branson 7845RP(US)	IDLE GEAR	Year/Month 2020/02

KeyNo.	Part Number	Part Name	Quantity	Other
1	EA00000145A	SHAFT GEAR,IDLE	1	
2	EA00000146A	GEAR ASSY,IDLE	1	
2-1	EA00000147A	GEAR,IDLE	1	
2-2	EA00000148A	BUSH, IDLE GEAR	1	
3	26013-080552	SCREW,CAPTIVEWASHERCAP	3	

FIG E010 Branson 7845RP(US)	ALTERNATOR	Year/Month 2020/02

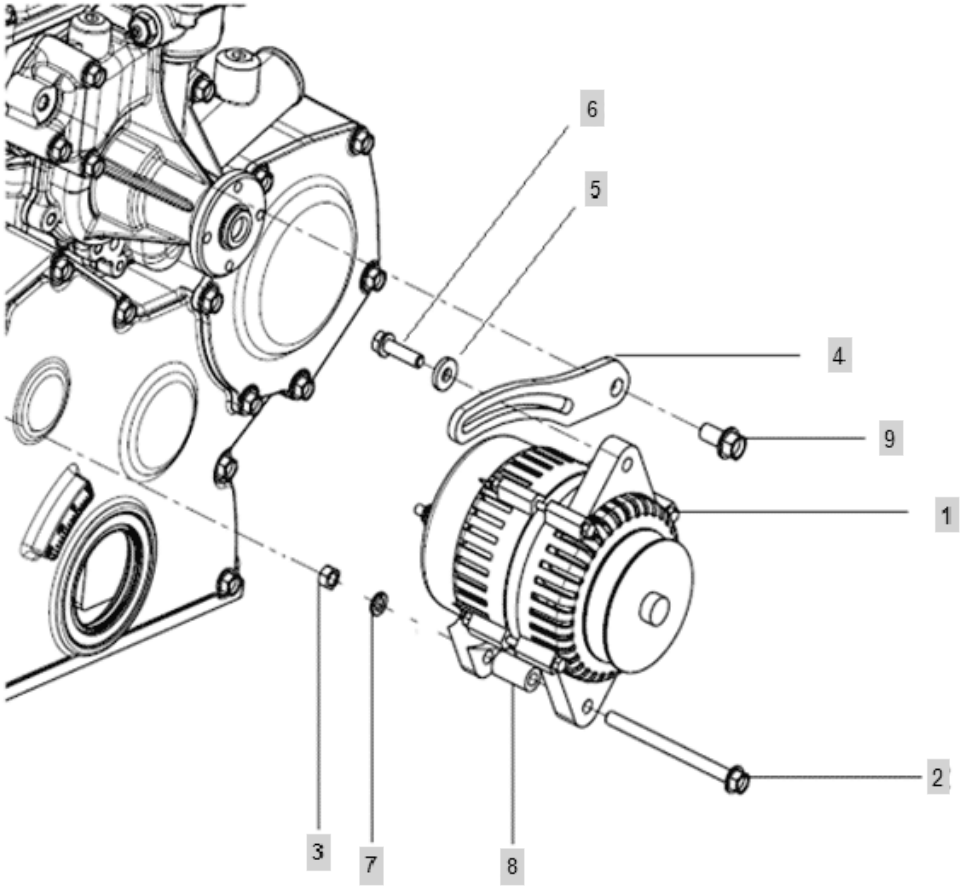

FIG E010 Branson 7845RP(US)	ALTERNATOR	Year/Month 2020/02

KeyNo.	Part Number	Part Name	Quantity	Other
1	EA00003977A	ALTERNATOR	1	
2	26106-081052	SCREW,HEXFLANGEHEADCAP	1	
3	26341-080002	U-NUT	1	
4	EA00000151A	BRACKET,ALTERNATOR	1	
5	RR15170000A4	WASHER 8.5X20X3.2	1	
6	26013-080302	HEX BOLT W/WASHER	1	
7	22121-080000	WASHER, PLAIN (Φ 08)	1	
8	EA00000152A	BUSHING	1	
9	26136-100204	HEX FLANGE BOLT	1	

FIG E011 Branson 7845RP(US)	BALANCE ASS'Y	Year/Month 2020/02

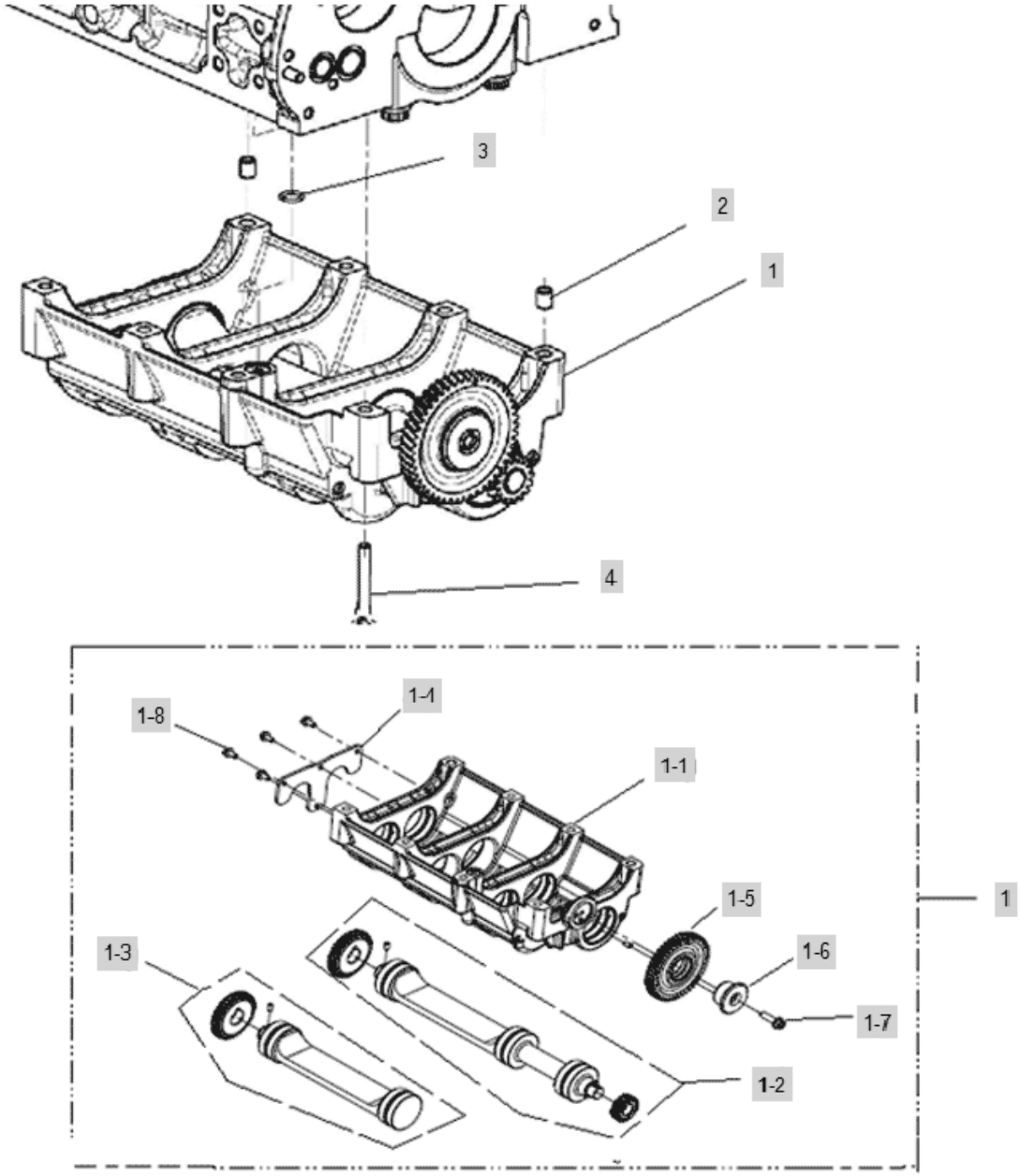

FIG E011 Branson 7845RP(US)	BALANCE ASS'Y	Year/Month 2020/02

KeyNo.	Part Number	Part Name	Quantity	Other
1	EA00002035C	2ND BALANCER ASSY	1	
1-1	EA00000155C	BALANCER CASE ASS'Y	1	
1-2	EA00002036C	BALANCER SHAFT(A) ASS'Y	1	
1-3	EA00002038C	BALANCE SHAFT(B) ASS'Y	1	
1-4	EA00000167A	BEARING,THRUST	1	
1-5	EA00000165A	SHAFT GEAR(IDLE),BALANCER	1	
1-6	EA00000166B	SHAFT IDLE,BALANCER	1	
1-7	26106-100302	HEXFLANGEBOLT	1	
1-8	26106-060122	HEX BOLT (6-12)	4	
2	HRA1000700A4	PIN,GUIDE	2	
3	24311-000140	O-RING, DYNAMIC (Φ14)	1	
4	26106-080652	SCREW,HEXFLANGEHEADCAP	8	

FIG E012 Branson 7845RP(US)	FAN DRIVE	Year/Month 2020/02

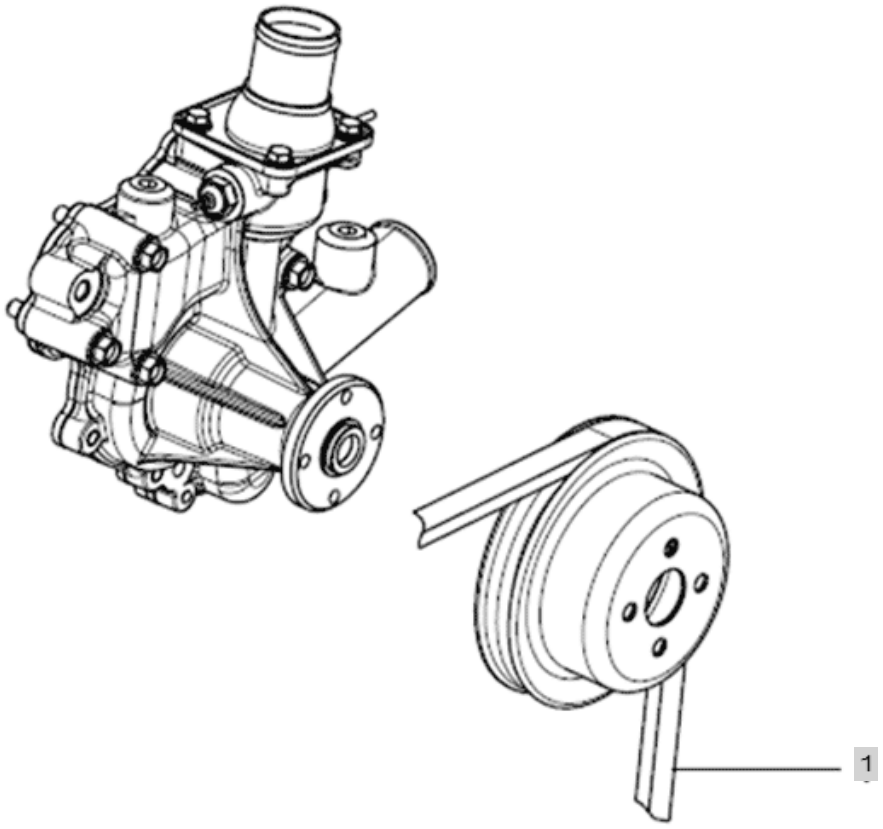

FIG E012 Branson 7845RP(US)	FAN DRIVE	Year/Month 2020/02

KeyNo.	Part Number	Part Name	Quantity	Other
1	EA00002068A	V-BELT B47	1	

FIG E013 Branson 7845RP(US)	DRIVE PULLY	Year/Month 2020/02

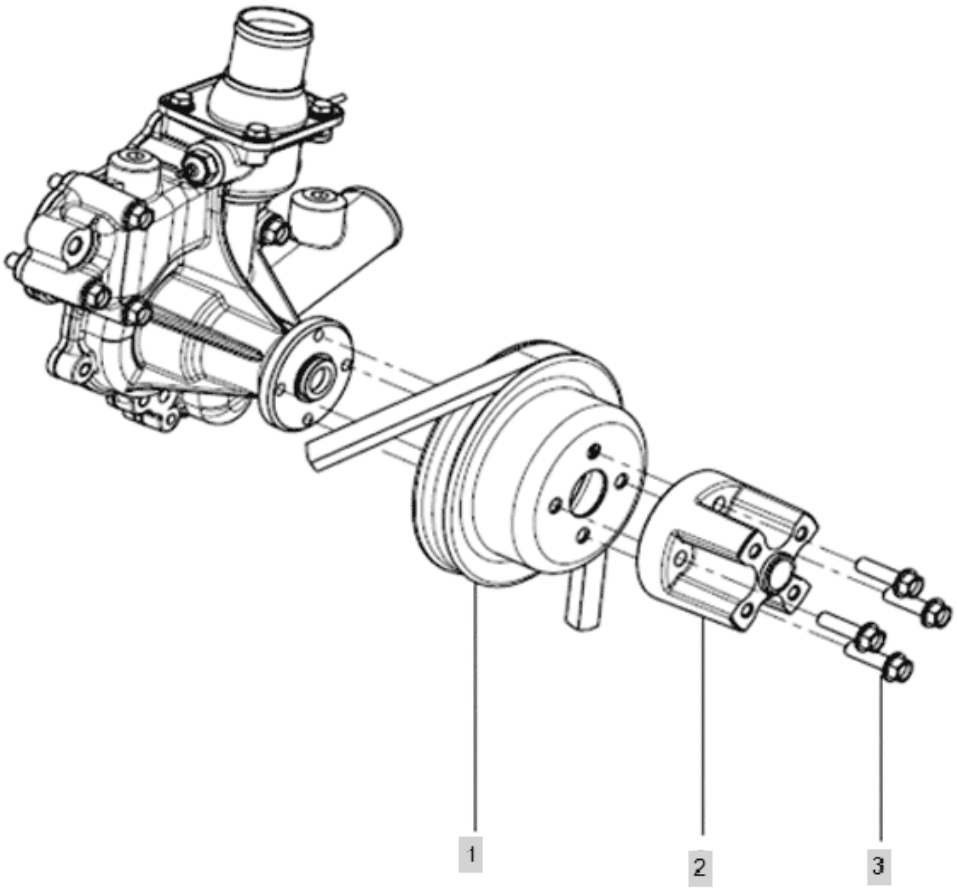

FIG E013 Branson 7845RP(US)	DRIVE PULLY	Year/Month 2020/02

KeyNo.	Part Number	Part Name	Quantity	Other
1	EA00001720A	V-PULLEY(B")	1	
2	EA00003095A	SPACER(COOLING FAN)	1	
3	26106-080302	HEX BOLT, FLANGE	4	

FIG E014 Branson 7845RP(US)	FUEL FILTER	Year/Month 2020/02

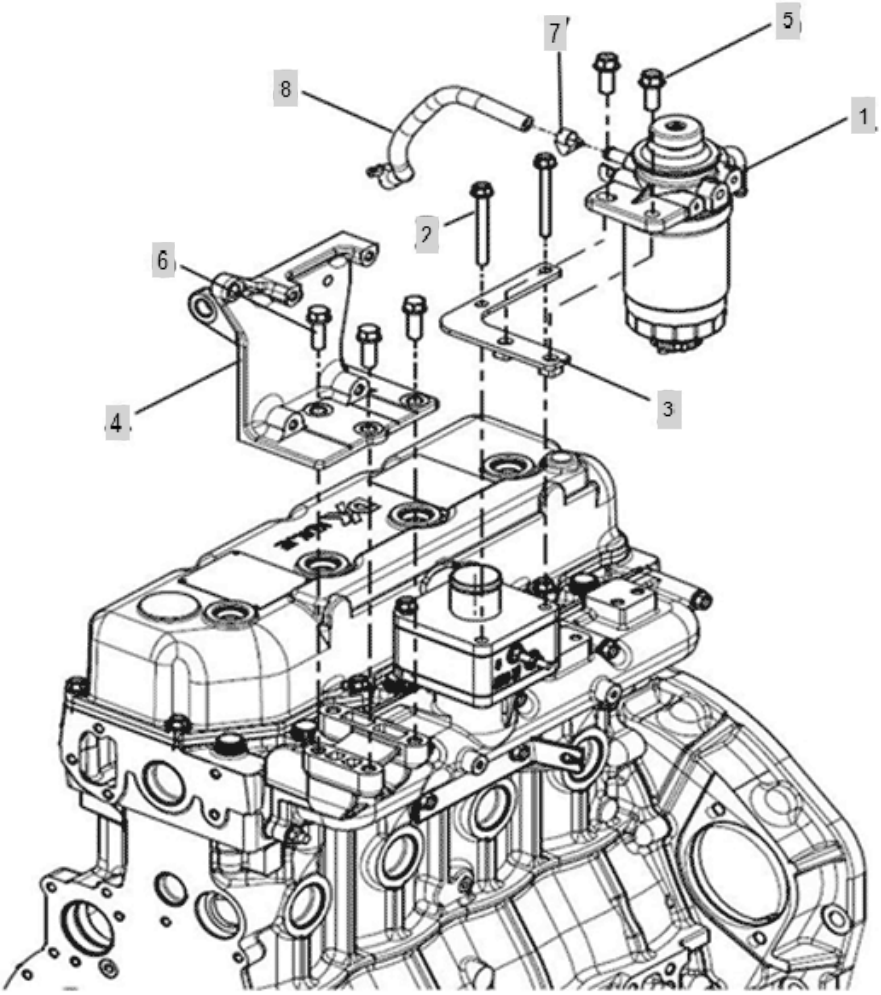

FIG E014 Branson 7845RP(US)	FUEL FILTER	Year/Month 2020/02

KeyNo.	Part Number	Part Name	Quantity	Other
1	EA00003130A	FUEL FILTER ASSY	1	
2	26106-080702	SCREW,HEXFLANGEHEADCAP	2	
3	EA00004313A	FUEL FILTER BRACKET	1	
4	TA00022673A	COMPRESSOR BRACKET	1	
5	26106-100252	SCREW,HEXFLANGEHEADCAP	2	
6	26013-100302	SCREW,CAPTIVEWASHERCAP	4	
7	23000-013000	Clip, Hose (Φ13)	2	
8	EA00000698B	HOSE, FUEL	1	

FIG E015 Branson 7845RP(US)	FLYWHEEL HOUSING	Year/Month 2020/02

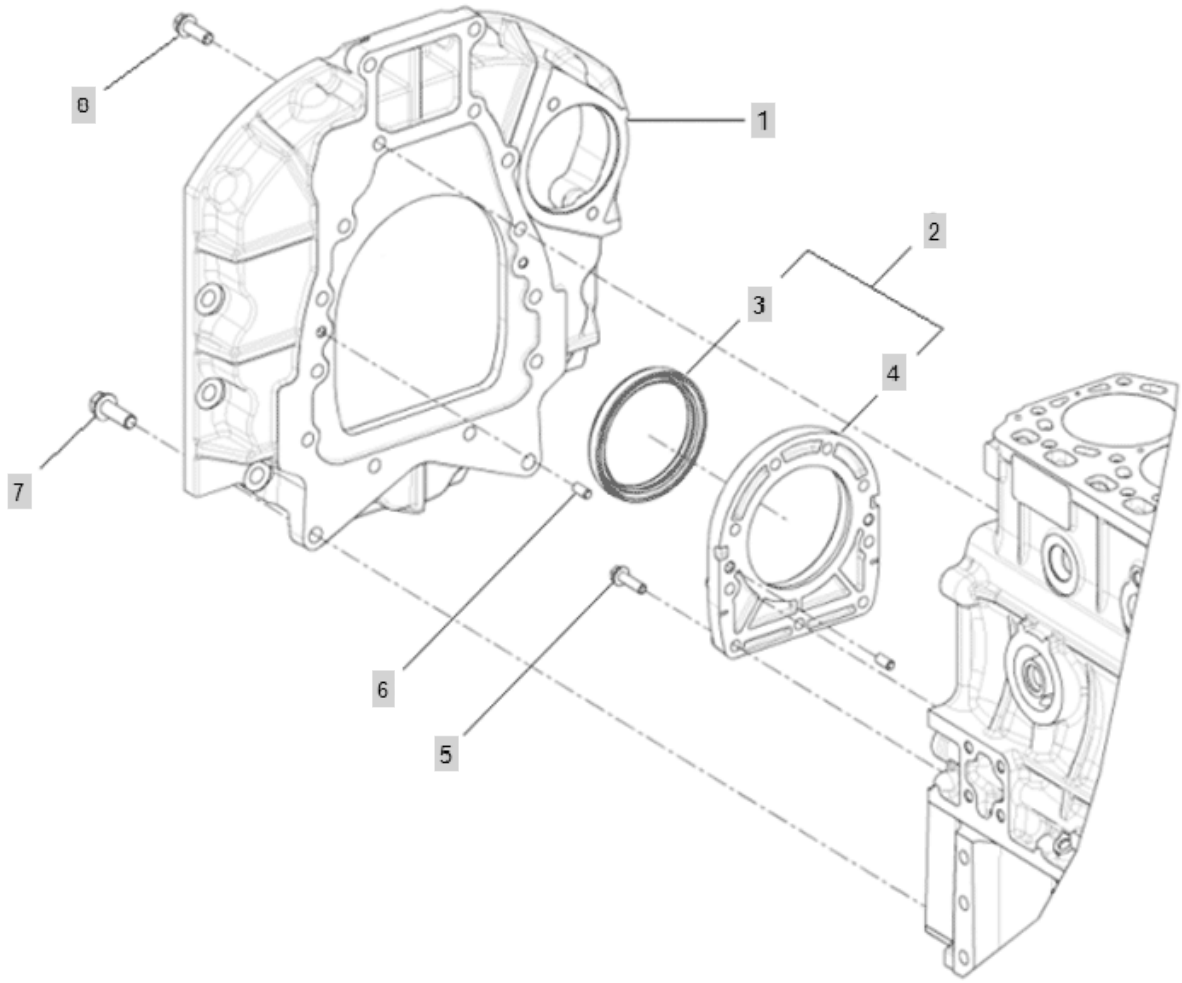

FIG E015 Branson 7845RP(US)	FLYWHEEL HOUSING	Year/Month 2020/02

KeyNo.	Part Number	Part Name	Quantity	Other
1	EA00000337C	HOUSING, FLYWHEEL	1	
2	EA00000178B	CARRIER ASSY, OIL SEAL	1	
3	HH03180000B4	OIL SEAL, MOUNTING FLANGE	1	
4	EA00000179B	CARRIER,OIL SEAL	1	
5	26106-080302	HEX BOLT, FLANGE	9	
6	22312-080160	PIN, DOWEL (8-16)	4	
7	26106-120352	screw	2	
8	26106-100302	HEXFLANGEBOLT	14	

FIG E016 Branson 7845RP(US)	16. FUEL INJECTION	Year/Month 2020/02

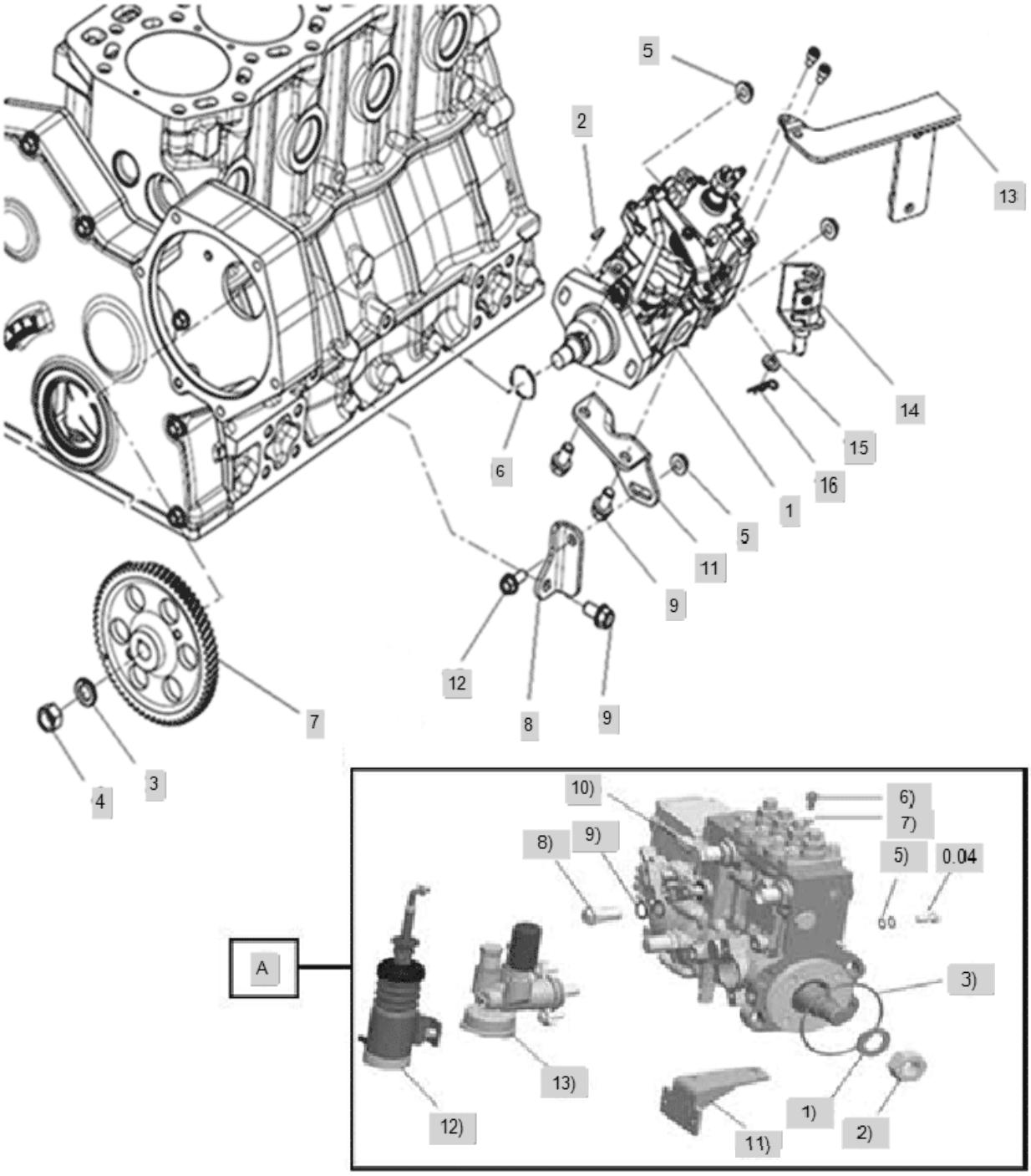

FIG E016 Branson 7845RP(US)	16. FUEL INJECTION	Year/Month 2020/02

KeyNo.	Part Number	Part Name	Quantity	Other
1	EA00002252A	FUELINJECTION PUMP(VE)	1	
1)	22217-200000	WASHER, SPRING (Φ 20)	1	
2)	26736-200002	NUT	1	
3)	EA00001125A	O-RING	1	
4)	EA00001123A	OIL INLET BOLT	1	
5)	EA00001124A	WASHER	2	
6)	EA00001120A	BLEEDING BOLT	1	
7)	EA00001121A	WASHER	2	
8)	EA00001114A	OVER PRESSURE VALVE	1	
9)	22217-200000	WASHER, SPRING (Φ 20)	4	
10)	EA00001112A	BOLT, FUEL INLET	1	
11)	EA00001119A	STOP SOLENOID BRACKET	1	
12)	EA00001116A	SOLENOID, FUEL SHUTOFF	1	
13)	EA00001117A	FEED PUMP ASSY	1	
2	HRA0702100A4	KEY,PLAINWOODRUFF	1	
3	22217-140000	WASHER, SPRING (Φ 14)	1	
4	26716-140002	NUT	1	
5	26367-080002	HEX FLANGE NUT (Φ8)	3	
6	24341-000500	O-RING, FIX (Φ50)	1	
7	EA00000184B	GEAR, FUEL INJECTION PUMP	1	
8	EA00000185A	BRACKET,PUMP(B)	1	
9	26106-100162	SCREW,HEXFLANGEHEADCAP	3	
11	EA00002735A	FUEL INJECTION PUMP SUPPORT(A)	1	
12	26106-080202	SQR FLANGE BOLT	1	
13	EA00003884B	BRACKET	1	
14	EA00002323A	THROTTLE CONTROL LEVER	1	
15	22117-080000	WASHER, PLAIN (Φ 08)	1	
16	22360-080000	PIN , SNAP (8Φ)	1	
A	EA00001107A	FUEL INJECTION PUMP (8050)	0	

FIG E017 Branson 7845RP(US)	PLUMBING, FUEL	Year/Month 2020/02

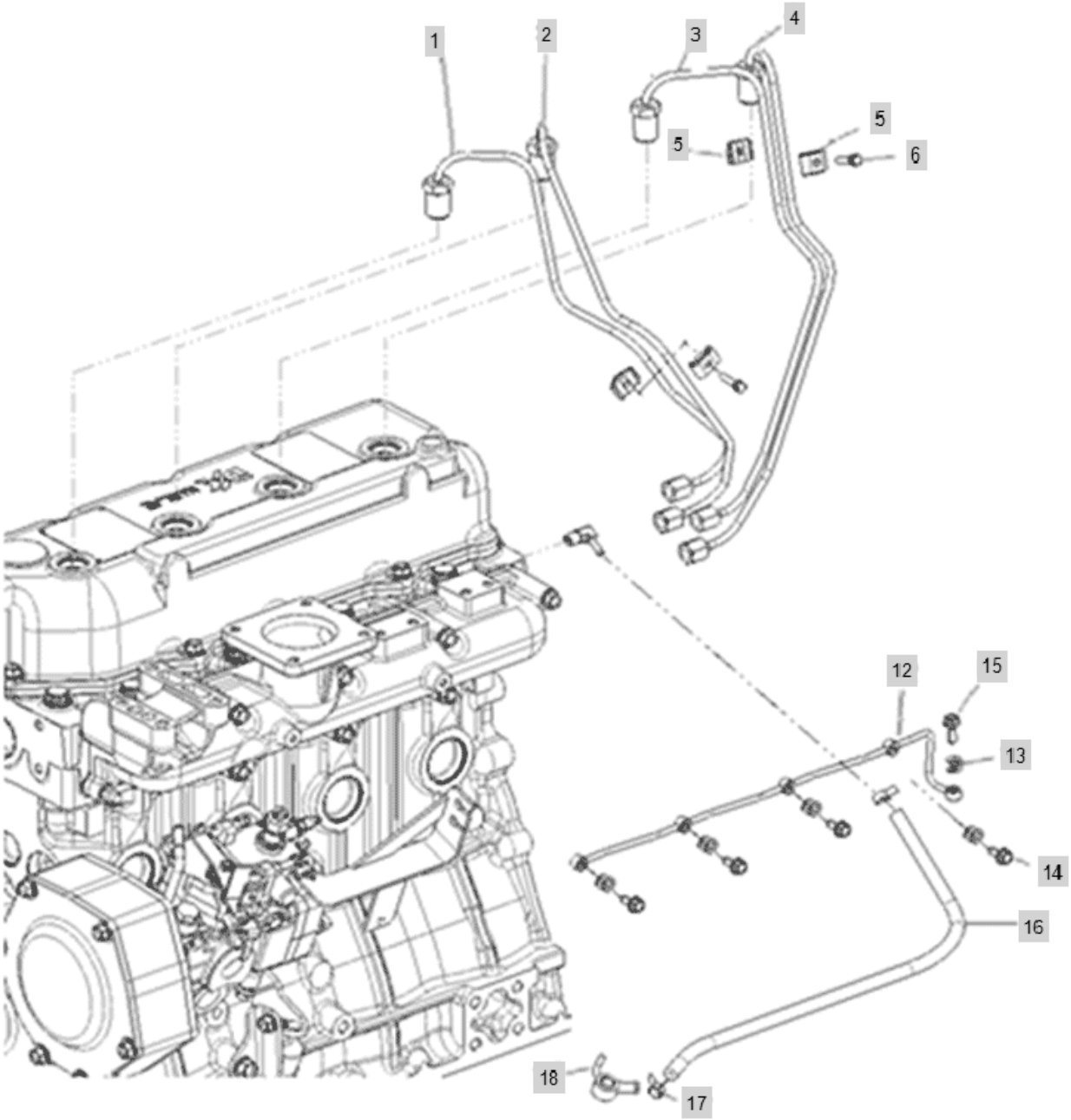

FIG E017 Branson 7845RP(US)	PLUMBING, FUEL	Year/Month 2020/02

KeyNo.	Part Number	Part Name	Quantity	Other
1	EA00003689A	FUEL PIPE ASSY(A)	1	
2	EA00003690A	FUEL PIPE ASSY(B)	1	
3	EA00002334A	FUEL PIPE ASS'Y(C)	1	
4	EA00002336A	FUEL INJECTION PIPE ASS'Y(C)	1	
5	HT17080000A4	CLAMP(B) PIPE	4	
6	26013-060202	Bolt, Hexa (6-20)	2	
12	EA00000192A	TUBE,FUEL RETURN	1	
13	HRJ0203003A4	PACKING	5	
14	HRJ0203002A4	SCREW RETURN TUBE	4	
15	EA00000095A	SCREW, RETURN TUBE	1	
16	EA00000196A	TUBE, FUEL DRAIN(B)	1	
17	23080-010000	CLAMP, V BAND	2	
18	EA00000991B	JOINT	1	

FIG E018 Branson 7845RP(US)	FLYWHEEL	Year/Month 2020/02

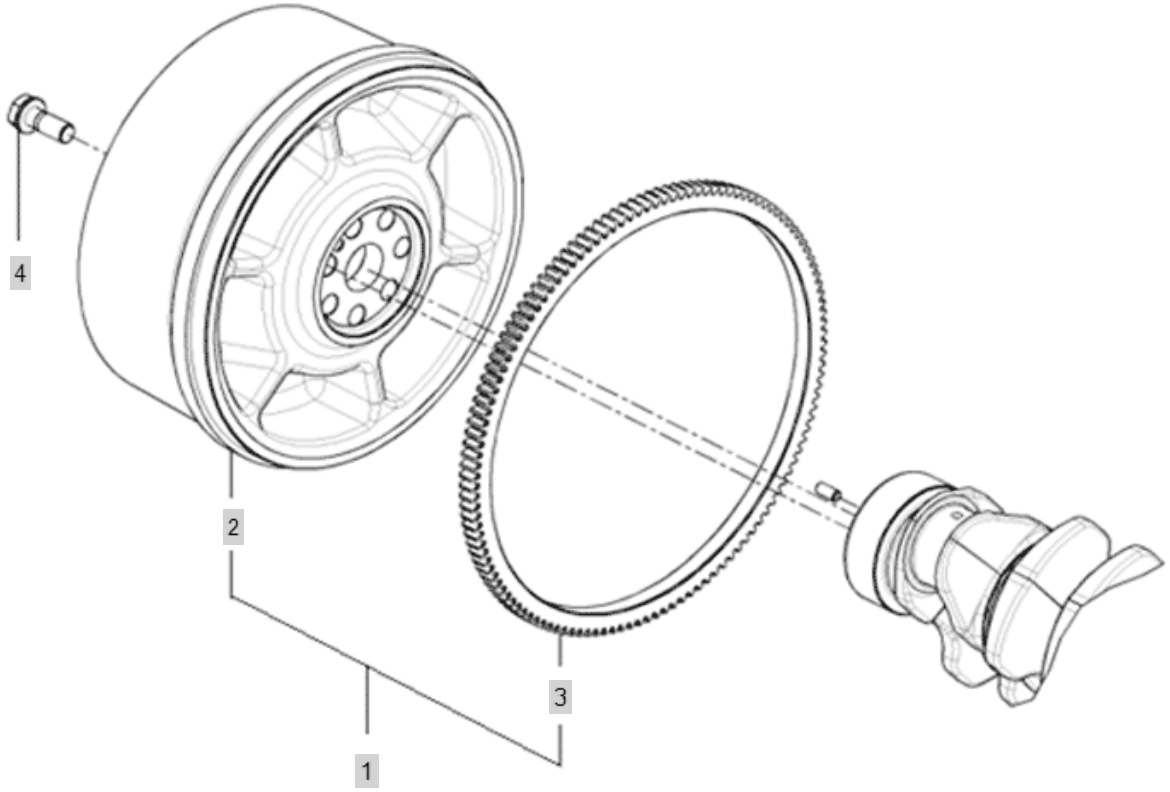

FIG E018 Branson 7845RP(US)	FLYWHEEL	Year/Month 2020/02

KeyNo.	Part Number	Part Name	Quantity	Other
1	EA00003261A	FLYWHEEL ASSY	1	
2	EA00003294A	FLYWHEEL(LUXEN5)	1	
3	HH09120200A2	RING GEAR	1	
4	HH09110000A4	BOLT	7	

FIG E019 Branson 7845RP(US)	COVER, FRONT GEAR	Year/Month 2020/02

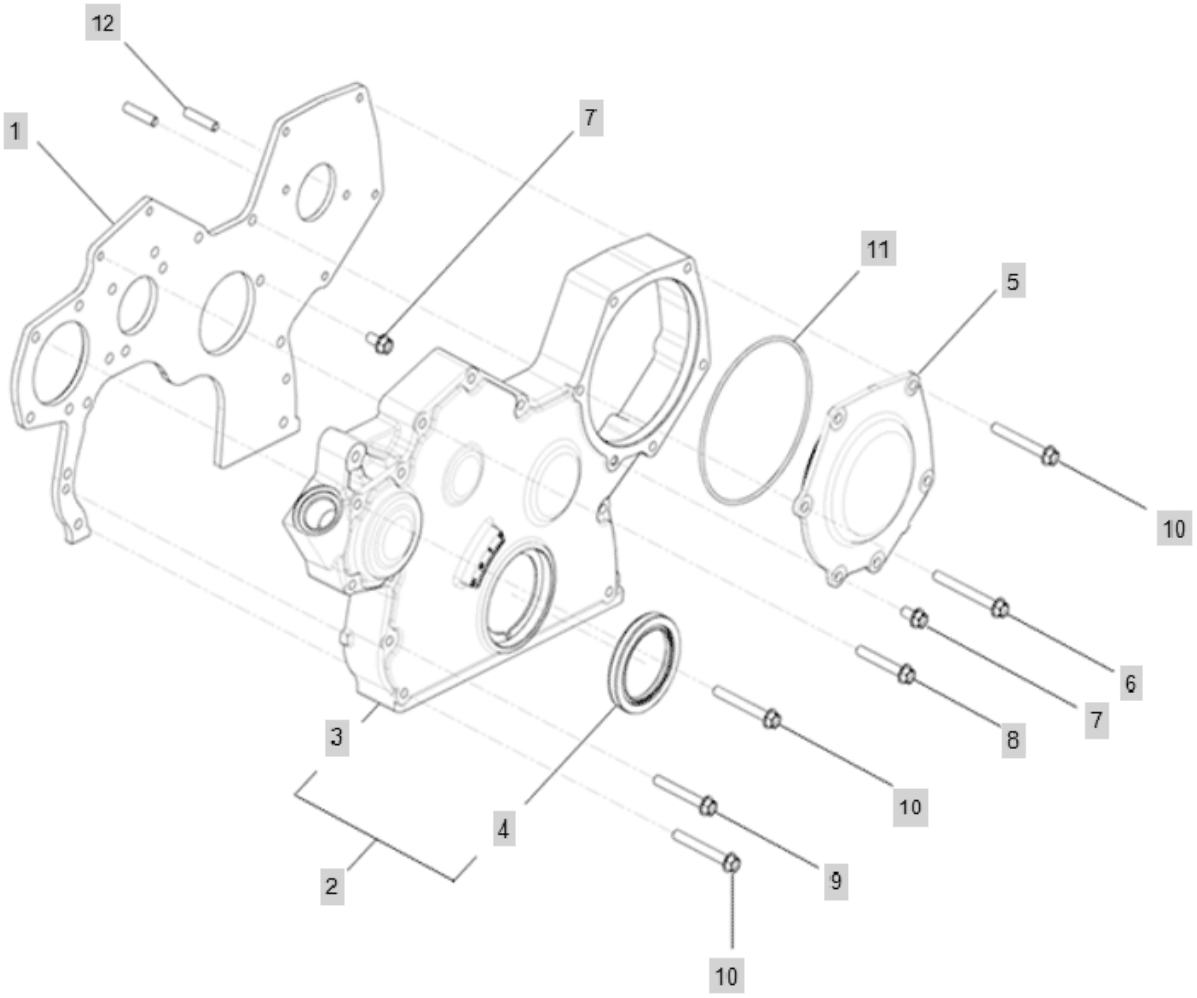

FIG E019 Branson 7845RP(US)	COVER, FRONT GEAR	Year/Month 2020/02

KeyNo.	Part Number	Part Name	Quantity	Other
1	EA00000201C	PLATE,GEAR COVER	1	
2	EA00000202A	COVER,FRONT ASSY	1	
3	EA00000203A	COVER,FRONT	1	
4	EA00000204A	SEAL,OIL(G)	1	
5	EA00000205A	COVER, (FUEL PUMP)	1	
6	26106-080752	SCREW,HEXFLANGEHEADCAP	1	
7	26106-080162	SCREW,HEXFLANGEHEADCAP	6	
8	26106-080552	HEX FLANGE BOLT (D80)	2	
9	26106-080602	SCREW,HEXFLANGEHEADCAP	3	
10	26106-080652	SCREW,HEXFLANGEHEADCAP	10	
11	24321-001400	O-RING	1	
12	26216-080252	STUDBOLT	2	

FIG E020 Branson 7845RP(US)	HEAD, CYLINDER	Year/Month 2020/02

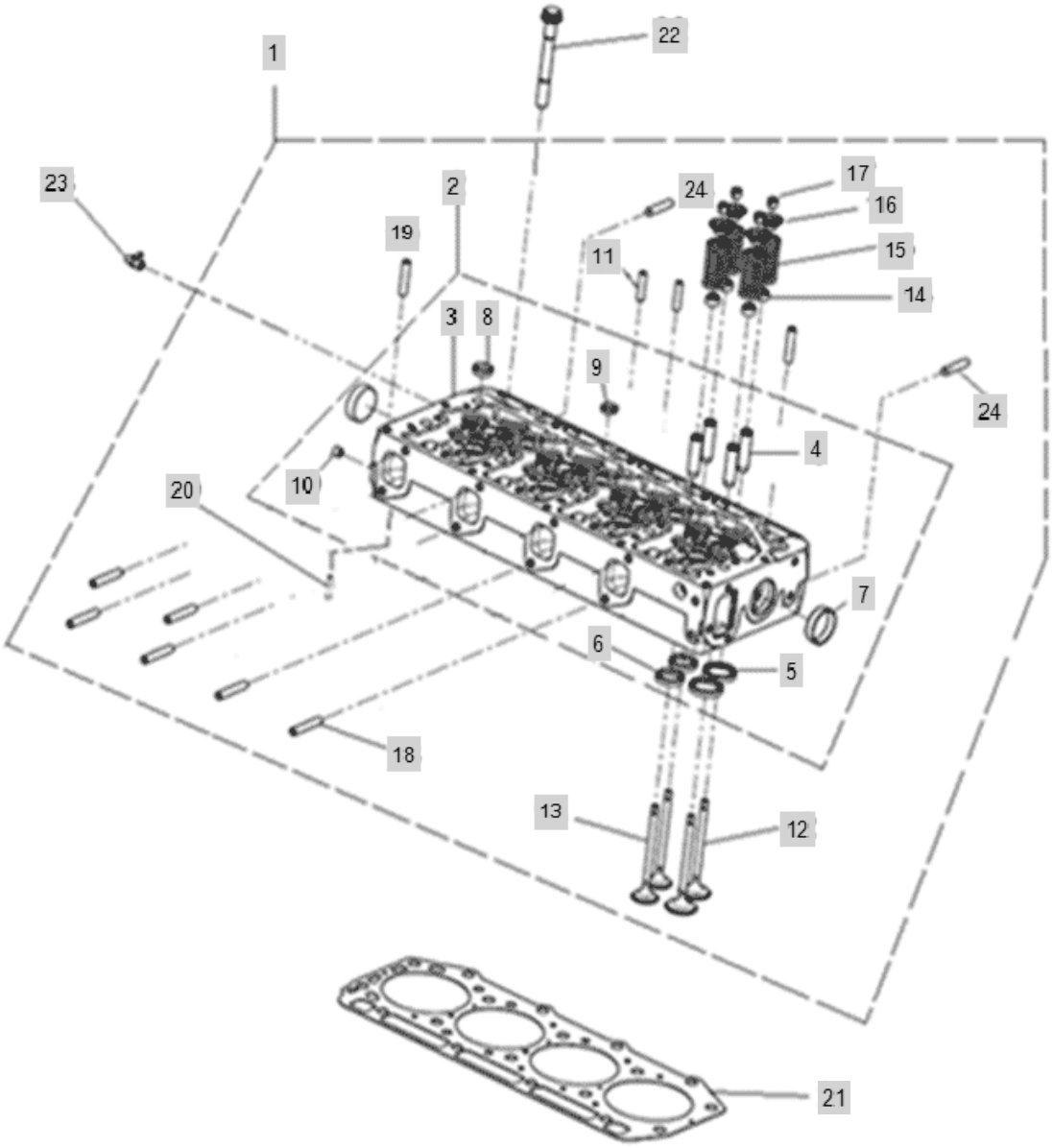

FIG E020 Branson 7845RP(US)	HEAD, CYLINDER	Year/Month 2020/02

KeyNo.	Part Number	Part Name	Quantity	Other
1	EA00003841B	HAED, CYLINDER ASSY	1	
2	EA00000209G	HEAD SUB ASSY,CYLINDER	1	
3	EA00000210G	HEAD, CYLINDER	1	
4	EA00000211A	Guide, Valve	16	
5	EA00000212A	Seat, Intake Valve	8	
6	EA00000213A	Seat, Exaust Valve	8	
7	27241-400000	PLUG (D40)	2	
8	27241-220000	PLUG,EXPANSION	4	
9	27241-180000	PLUG-SEALING CAP	3	
10	23871-010000	PLUG	1	
11	EA00001887A	PIN, VALVE BRIDGE	8	
12	EA00000214A	VALVE,INTAKE	8	
13	EA00000215A	VALVE,EXHAUST	8	
14	HC03090000A4	SEAL,VALVESTEM	16	
15	EA00000216A	SPRING,VALVE	16	
16	HRJ2201011A3	RETAINER,VALVE SPRING	16	
17	HT03010600A3	COTTER, VALVE SPRING	32	
18	EA00000644A	STUD	6	
19	26216-080302	STUD[1.5D].8X30	1	
20	22312-040100	PIN, DOWEL (4-10)	2	
21	EA00000217B	GASKET,CYLINDER HEAD	1	
22	EA00000218C	SCREW,HEX FLANGE HEAD CAP	18	
23	EA00003868A	NIPPLE	1	
24	26216-080352	BOLT, STUD 8 X 35	2	

FIG E021 Branson 7845RP(US)	MANIFOLD, INTAKE	Year/Month 2020/02

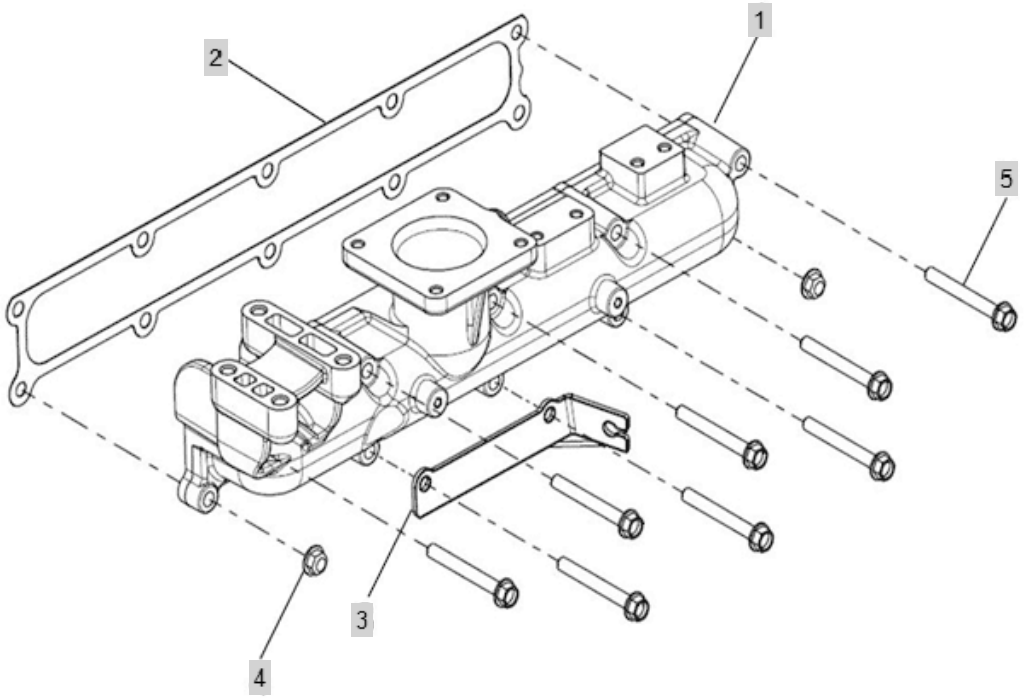

FIG E021 Branson 7845RP(US)	MANIFOLD, INTAKE	Year/Month 2020/02

KeyNo.	Part Number	Part Name	Quantity	Other
1	EA00003683C	MANIFOLD, INTAKE	1	
2	EA00000221A	GASKET,INTAKE MANIFOLD	1	
3	TA00038334A	BRACKET	1	
4	26367-080002	HEX FLANGE NUT (Φ8)	2	
5	26106-080702	SCREW,HEXFLANGEHEADCAP	8	

FIG E022 Branson 7845RP(US)	INJECTOR	Year/Month 2020/02

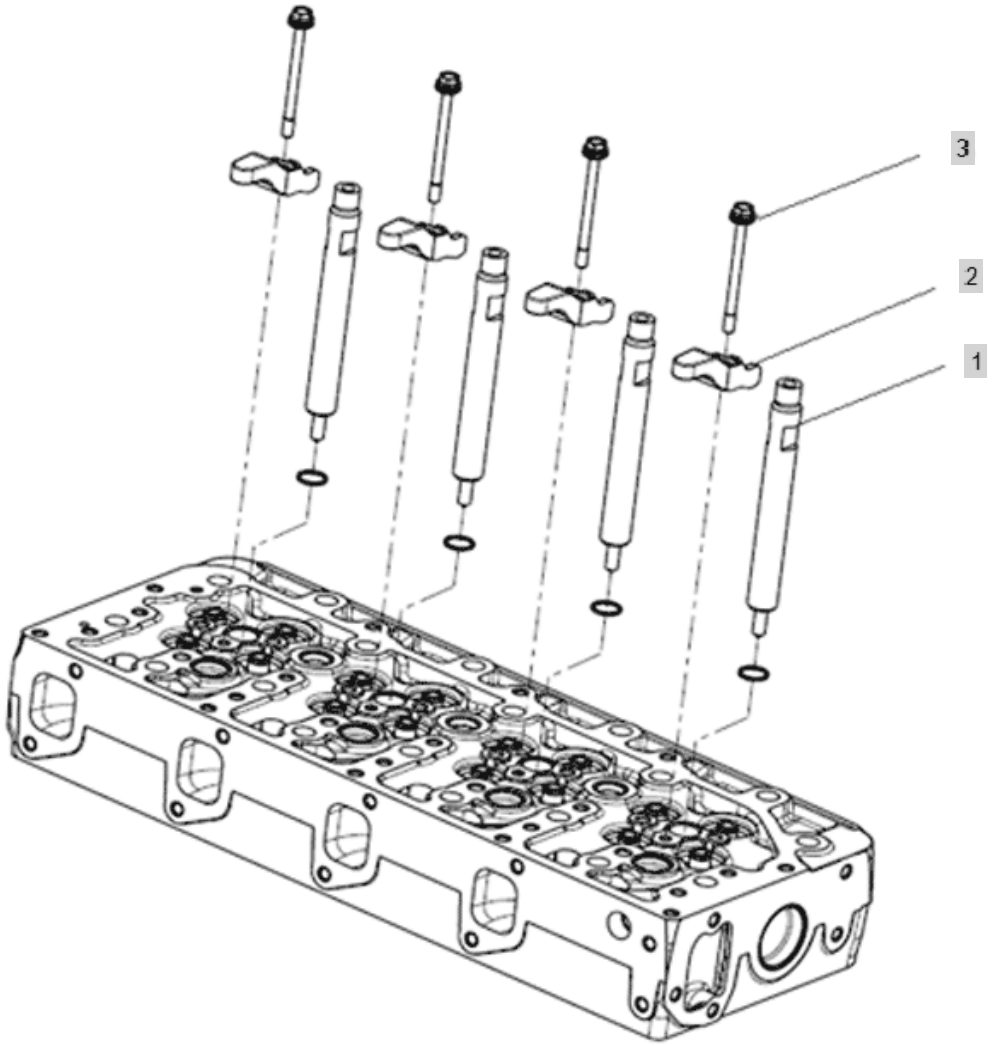

FIG E022 Branson 7845RP(US)	INJECTOR	Year/Month 2020/02

KeyNo.	Part Number	Part Name	Quantity	Other
1	EA00002535A	FULE INJECTION VALVE ASS'Y	4	
2	EA00000223A	CLAMP,INJECTOR	4	
3	HRJ0260300A4	BOLT,CLAMP	4	

FIG E023 Branson 7845RP(US)	ARRANGEMENT, LIFTING	Year/Month 2020/02

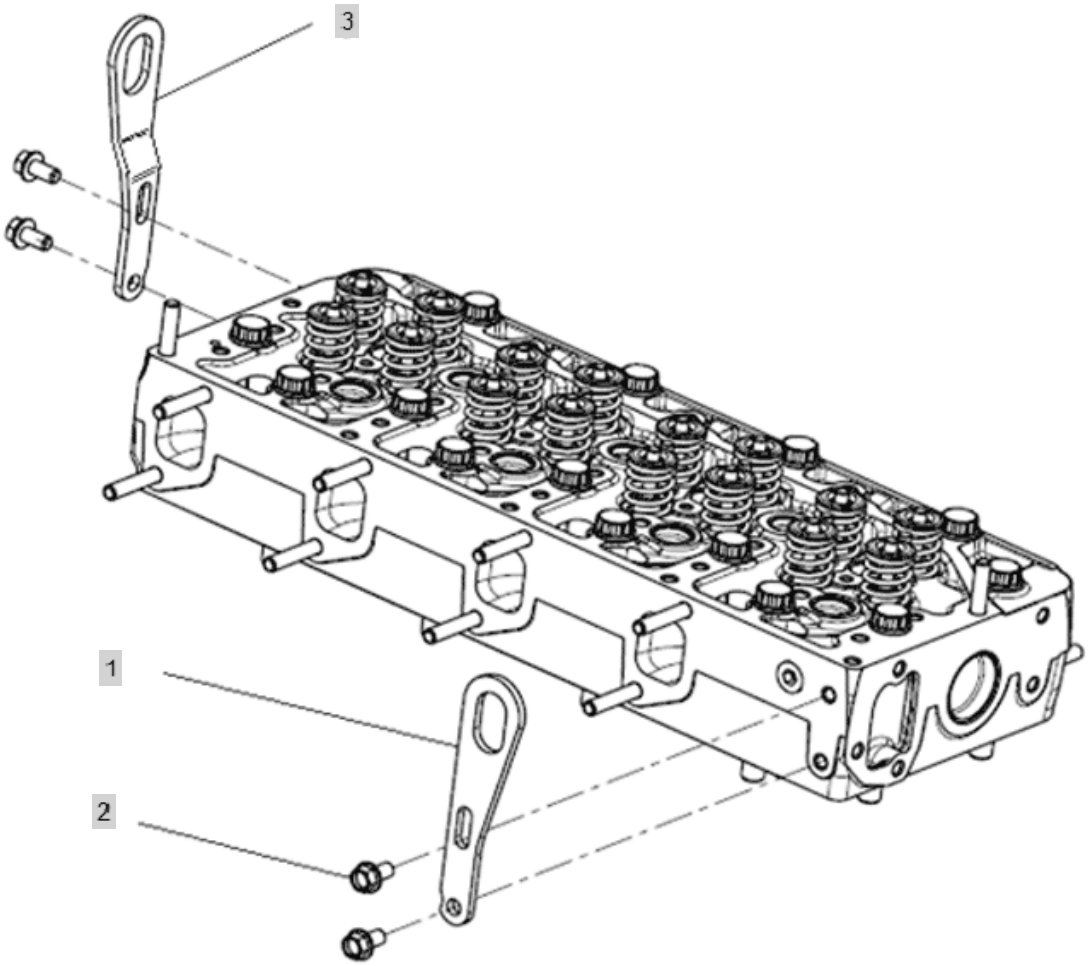

FIG E023 Branson 7845RP(US)	ARRANGEMENT, LIFTING	Year/Month 2020/02

KeyNo.	Part Number	Part Name	Quantity	Other
1	HK03530000A4	BRACKET,LIFTING	1	
2	26106-080142	SCREW,HEXFLANGEHEADCAP	4	
3	HRU0270100A4	BRACKET,LIFTING	1	

FIG E024 Branson 7845RP(US)	COOLER, ENGINE OIL	Year/Month 2020/02

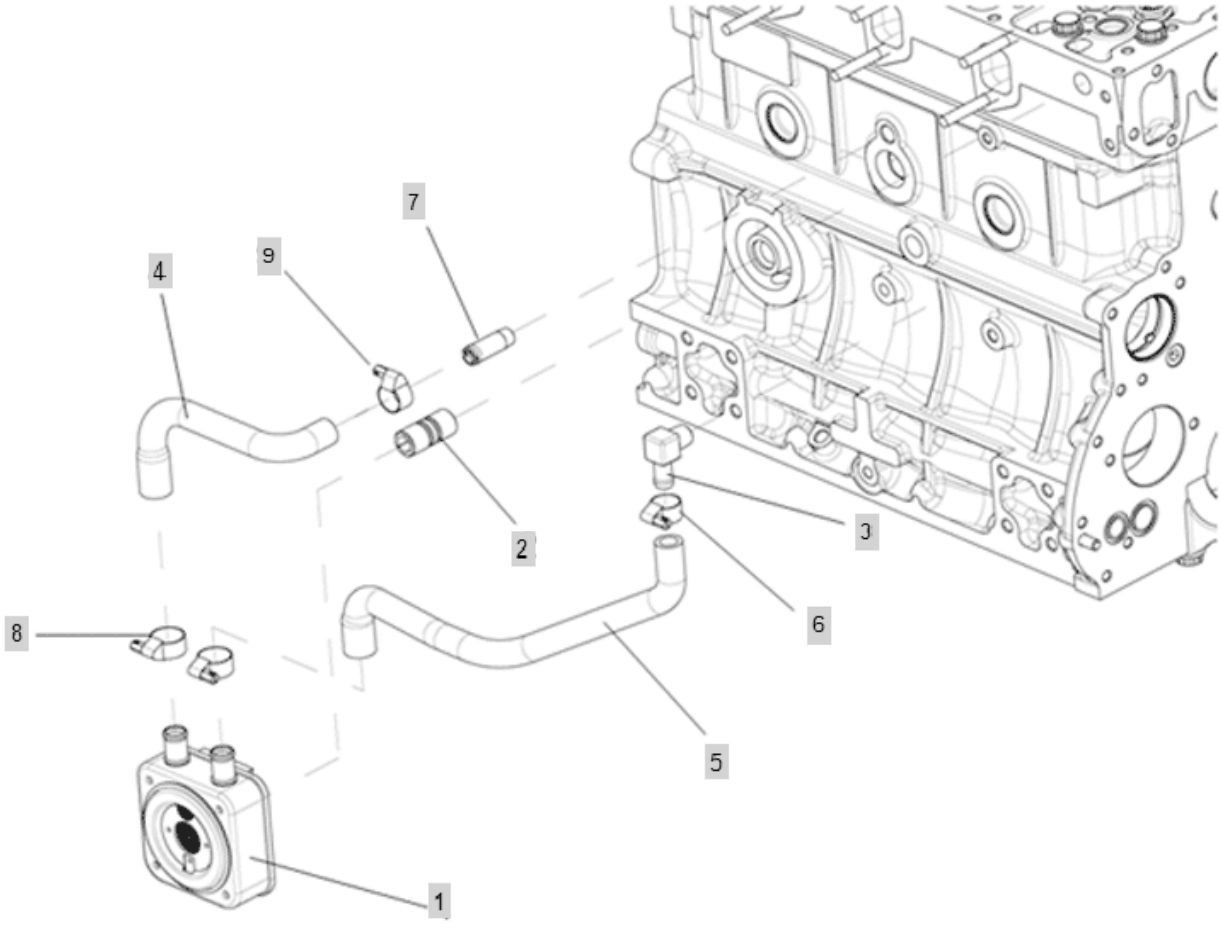

FIG E024 Branson 7845RP(US)	COOLER, ENGINE OIL	Year/Month 2020/02

KeyNo.	Part Number	Part Name	Quantity	Other
1	EA00002729A	LUB. OIL COOLER	1	
2	EA00000227A	INSERT,LUB OIL FILTER	1	
3	HRF1105000A4	ELBOW,PLAIN UNION	1	
4	EA00000311A	HOSE, PLAIN(A)	1	
5	EA00000312B	HOSE, PLAIN(B)	1	
6	23000-022000	CLAMP,HOSE	1	
7	HRC1204000A4	NIPPLE,PLAINPIPE	1	
8	23000-025000	CLAMP,HOSE	2	
9	23000-019000	Clip, Hose (Φ19)	1	

FIG E025 Branson 7845RP(US)	FILTER, LUBRICATING OIL	Year/Month 2020/02

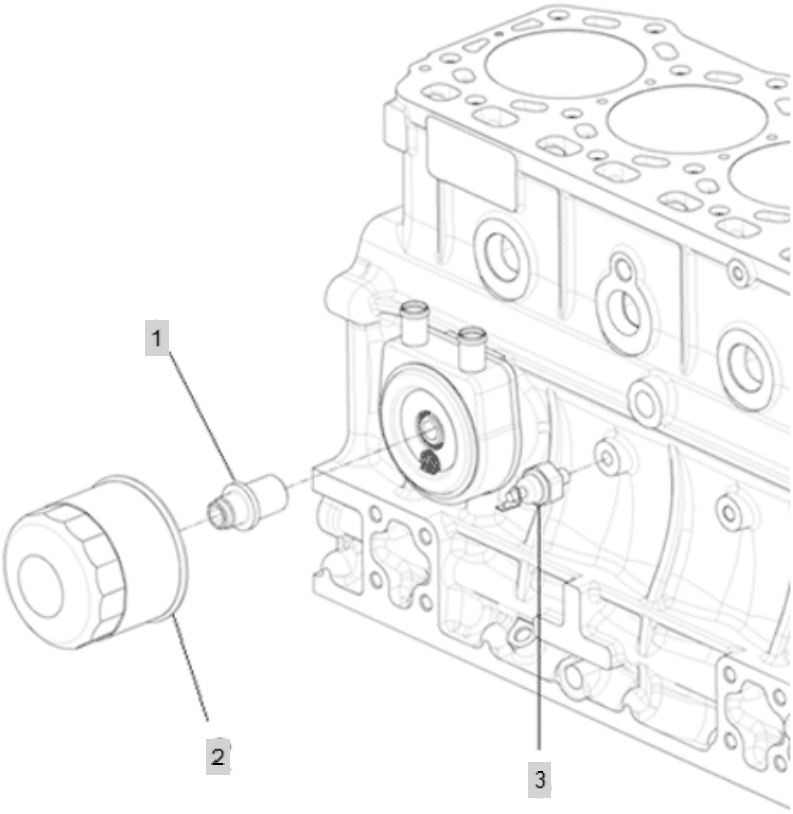

FIG E025 Branson 7845RP(US)	FILTER, LUBRICATING OIL	Year/Month 2020/02

KeyNo.	Part Number	Part Name	Quantity	Other
1	EA00000310A	BOLT COOLER, OIL	1	
2	EA00004647A	OIL FILTER	1	
3	HA09250000A3	SWITCH,OILPRESSURE	1	

FIG E026 Branson 7845RP(US)	GAUGE, OIL LEVEL	Year/Month 2020/02

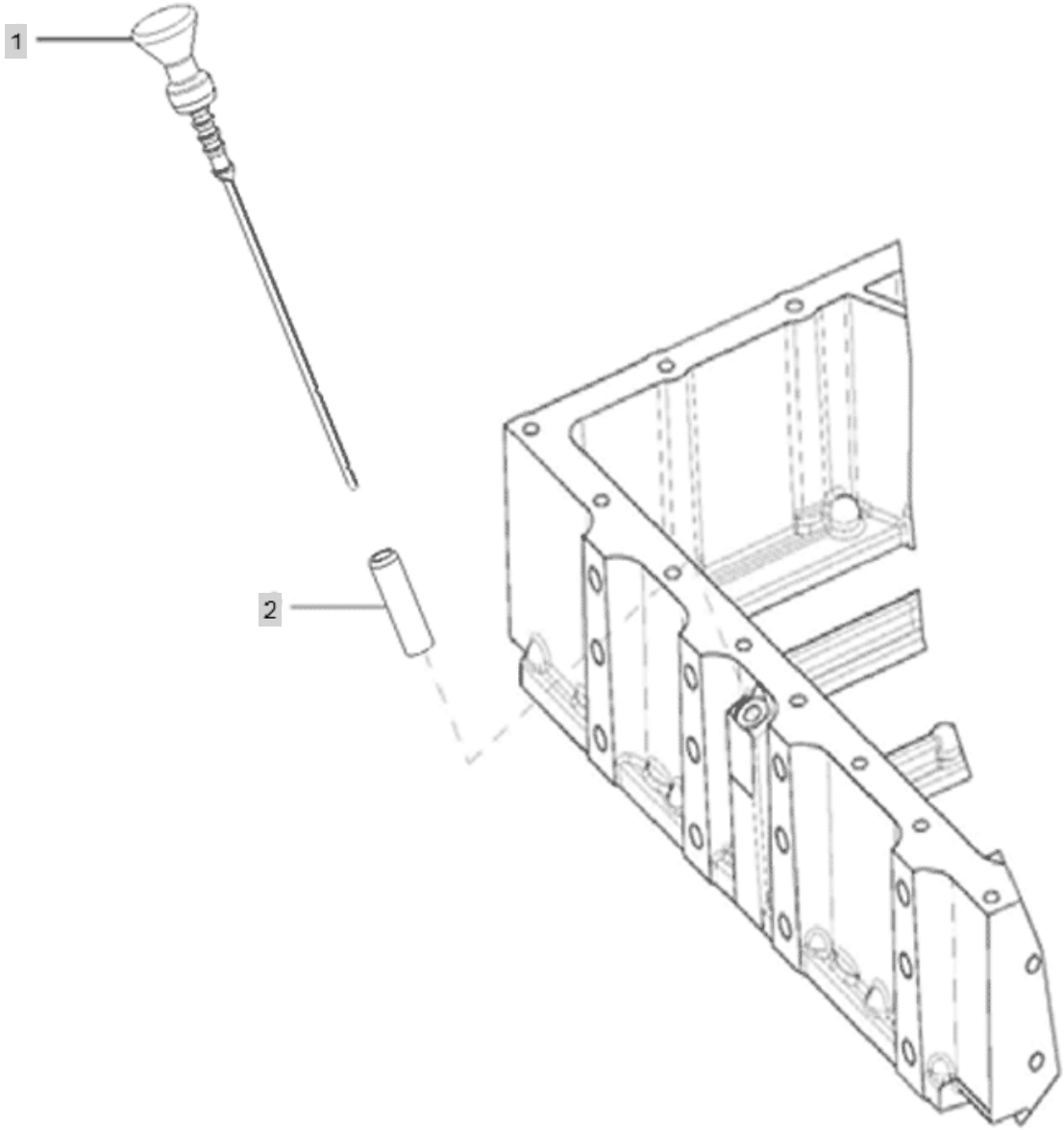

FIG E026 Branson 7845RP(US)	GAUGE, OIL LEVEL	Year/Month 2020/02

KeyNo.	Part Number	Part Name	Quantity	Other
1	EA00003604A	BODY	1	
2	HL03210000B4	TUBE,OILGAUGE	1	

FIG E027 Branson 7845RP(US)	PUMP, LUBRICATING OIL	Year/Month 2020/02

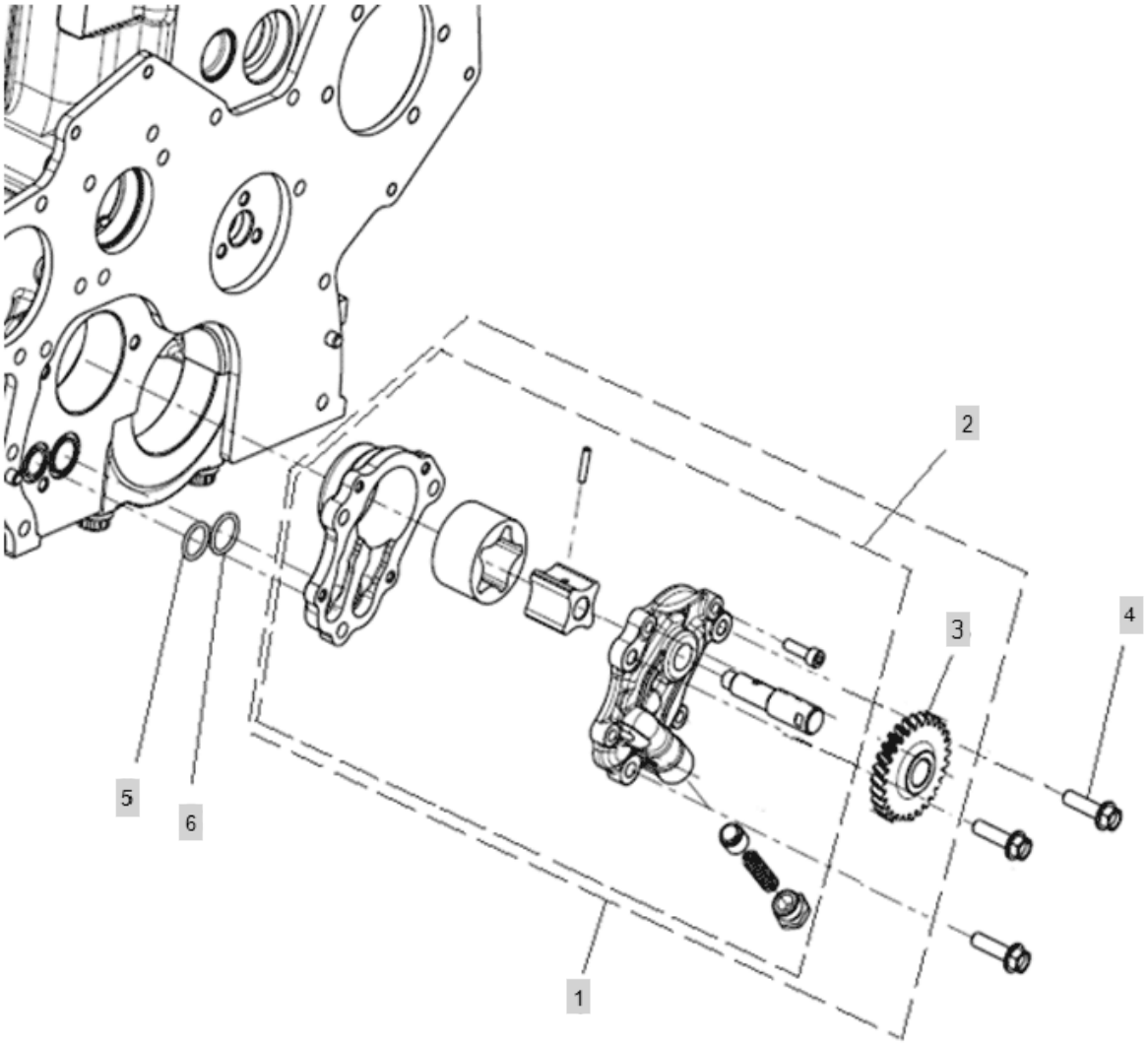

FIG E027 Branson 7845RP(US)	PUMP, LUBRICATING OIL	Year/Month 2020/02

KeyNo.	Part Number	Part Name	Quantity	Other
1	EA00002210A	LUB.OIL PUMP -> EA00002211A+EA00000234B	1	
2	EA00002210A	LUB.OIL PUMP -> EA00002211A+EA00000234B	1	
3	EA00000234B	GEAR,LUBRICATING OIL PUMP	1	
4	26106-080302	HEX BOLT, FLANGE	3	
5	24311-000200	O-RING, DYNAMIC (Φ20)	1	
6	24311-000210	O-RING, DYNAMIC (Φ21)	1	

FIG E028 Branson 7845RP(US)	NOZZLE, PISTON COOLING	Year/Month 2020/02

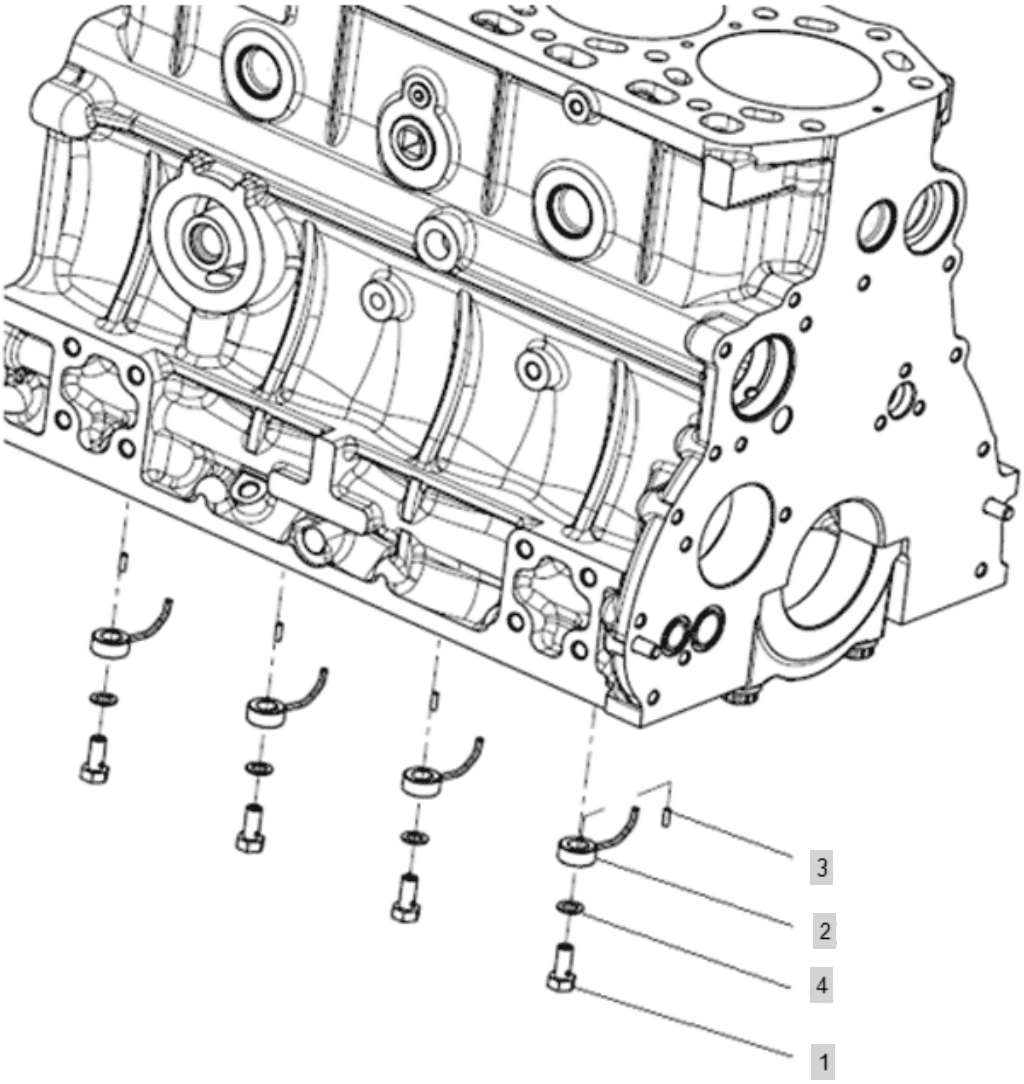

FIG E028 Branson 7845RP(US)	NOZZLE, PISTON COOLING	Year/Month 2020/02

KeyNo.	Part Number	Part Name	Quantity	Other
1	HRC1102000A4	CHECK VALVE ASS'Y	4	
2	EA00000358A	JET, NOZZLE	4	
3	22351-030010	PIN, SPRING (3-01)	4	
4	23414-080000	WASHER, PLAIN (Φ8)	4	

FIG E029 Branson 7845RP(US)	ARRANGEMENT, OIL FILL	Year/Month 2020/02

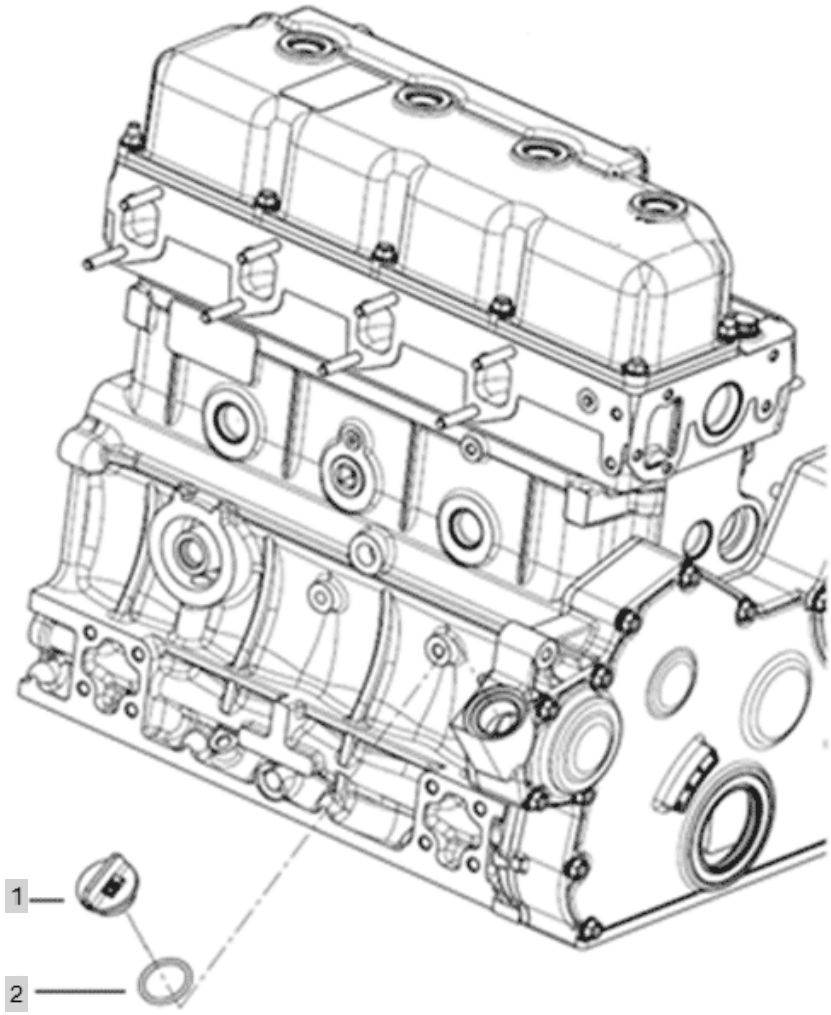

FIG E029 Branson 7845RP(US)	ARRANGEMENT, OIL FILL	Year/Month 2020/02

KeyNo.	Part Number	Part Name	Quantity	Other
1	HC03470000B4	CAP,FILTER	1	
2	24311-000320	O-RING, DYNAMIC (Φ32)	1	

FIG E030 Branson 7845RP(US)	OIL PAN	Year/Month 2020/02

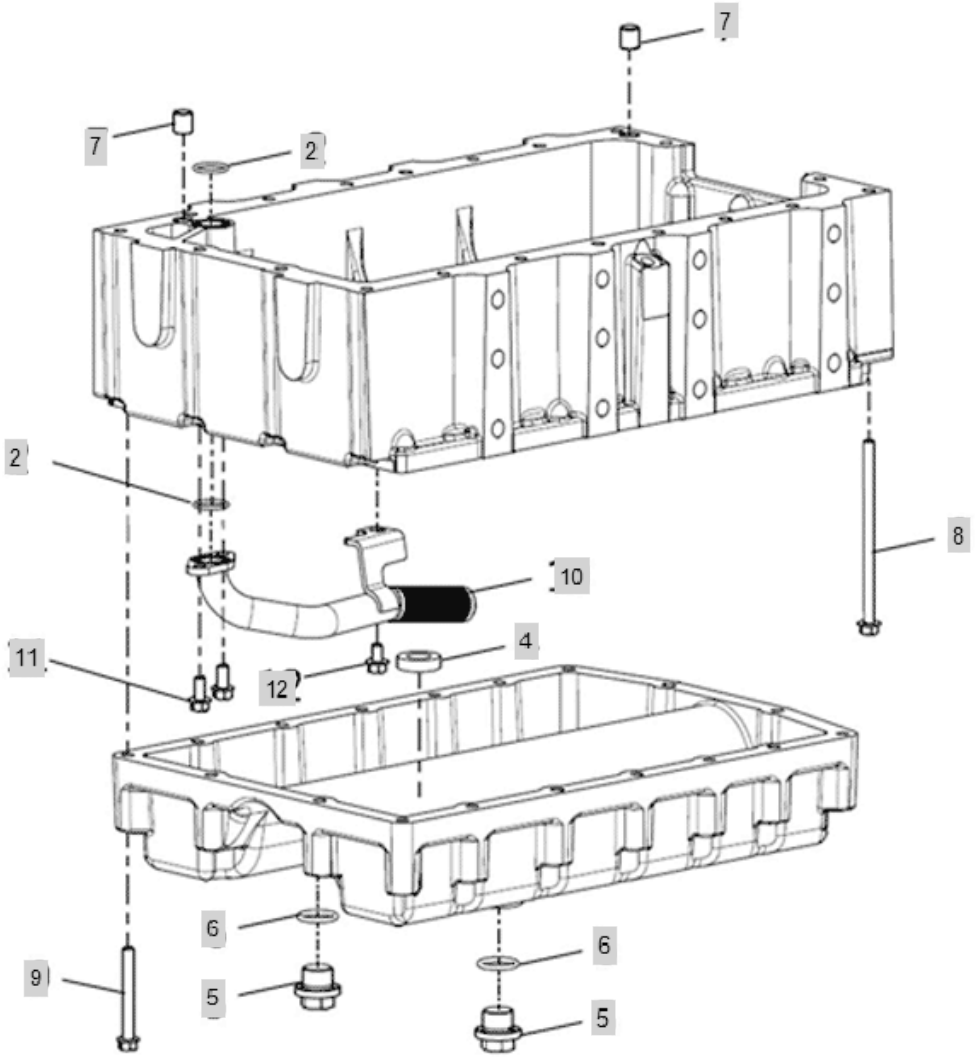

FIG E030 Branson 7845RP(US)	OIL PAN	Year/Month 2020/02

KeyNo.	Part Number	Part Name	Quantity	Other
1	EA00000239C	FRAME	1	
2	24311-000220	O-RING, DYNAMIC (Φ22)	2	
3	EA00000240D	OIL PAN	1	
4	HF01470000A4	MAGNET	1	
5	EA00000079B	PLUG, DRAIN	2	
6	24311-000240	O-RING, DYNAMIC (Φ24)	2	
7	HRA0300800A4	PIN,GUIDE	2	
8	26106-081302	HEX FLANGE BOLT	20	
9	26106-080652	SCREW,HEXFLANGEHEADCAP	18	
10	EA00002028A	OIL SUCTION PIPE ASSY	1	
11	26106-080162	SCREW,HEXFLANGEHEADCAP	2	
12	26106-080122	Bolt, Hexa (8-12)	1	

FIG E031 Branson 7845RP(US)	PISTION	Year/Month 2020/02

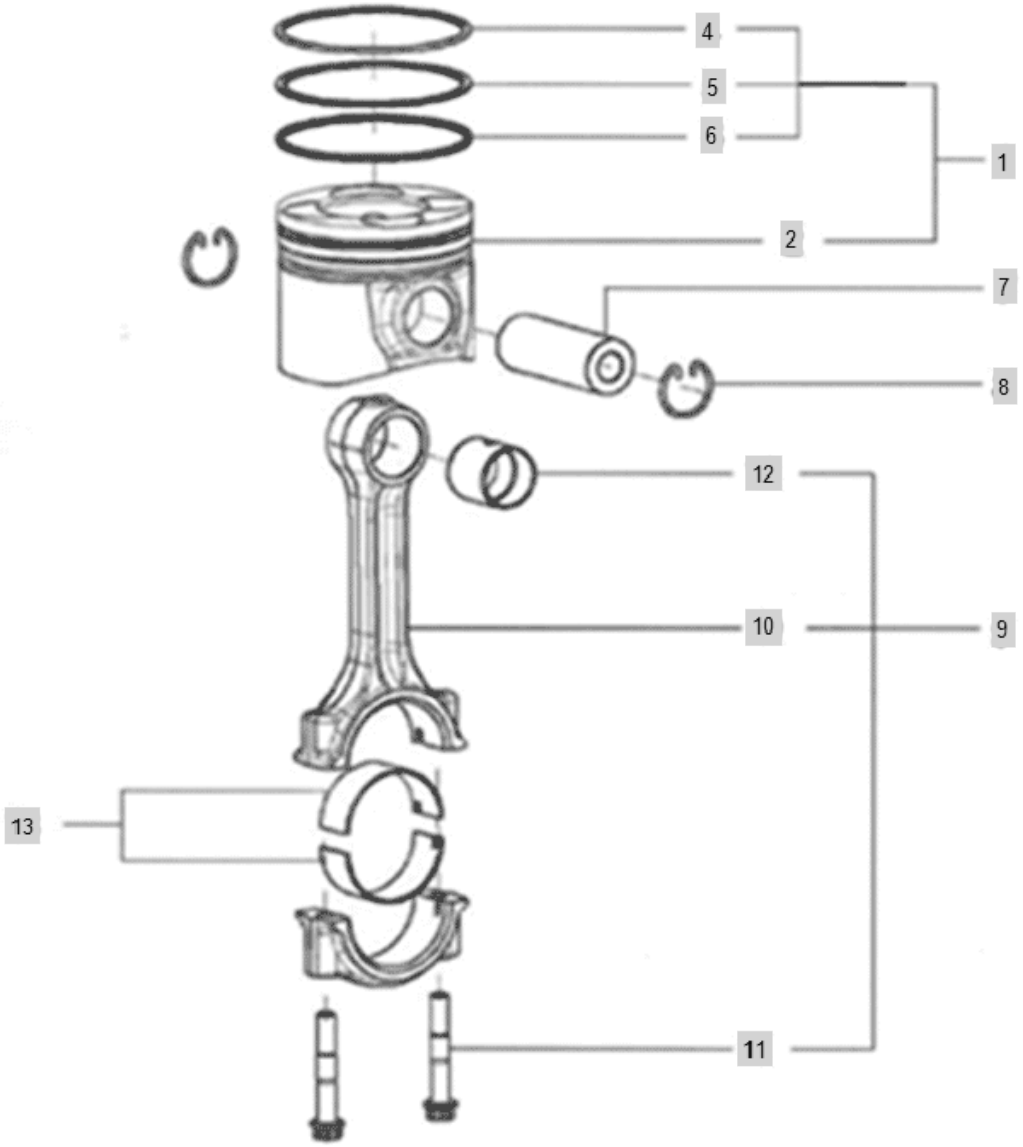

FIG E031 Branson 7845RP(US)	PISTION	Year/Month 2020/02

KeyNo.	Part Number	Part Name	Quantity	Other
1	EA00000362A	PISTON ASSY->EA00000363A+249A+250A+251A	4	
2	EA00000363B	PISTON	4	
4	EA00000249A	RING, 1ST COMPRESSION	4	
5	EA00000250A	RING, 2ND COMPRESSION	4	
6	EA00000251A	RING, OIL	4	
7	EA00000252B	PIN,PISTON	4	
8	HA08070000A4	RING,RETAINING	8	
9	EA00000253B	ROD, ENGINE CONNECTING	4	
10	EA00000254B	ROD, CONNECTING	4	
11	EA00000255A	SCREW,HEXAGON HEAD CAP	8	
12	EA00000256A	BUSHING	4	
13	EA00000257A	BEARING,CONNECTING ROD	8	

FIG E032 Branson 7845RP(US)	LEVER, LOCKER	Year/Month 2020/02

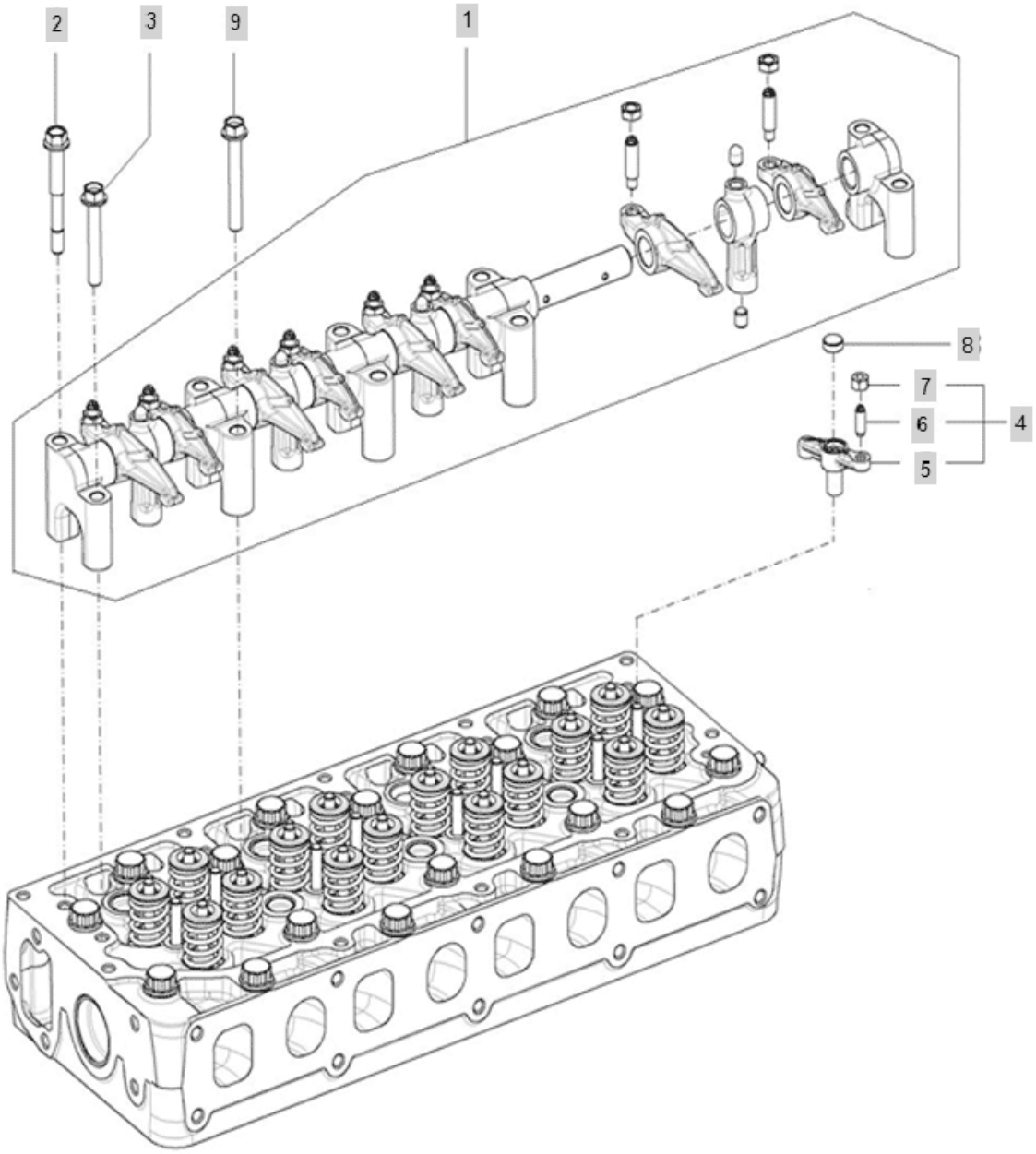

FIG E032 Branson 7845RP(US)	LEVER, LOCKER	Year/Month 2020/02

KeyNo.	Part Number	Part Name	Quantity	Other
1	EA00002998C		1	
1-1	EA00002999A	ROCKER SHAFT	1	
1-11	HH05280000A4	NUT,VALVEADJUSTING	8	
1-12	HRJ0370108A3	PIVOT~~INJECTOR CLAMP	4	
1-13	HRJ0370109A3	DOWEL~~ INJECTOR CLAMP	4	
1-2	27241-100000	PLUG 10	1	
1-3	EA00000261B	SUPPORT,ROCKER LEVER(A)	3	
1-4	EA00003000A	SUPPORT(B)	1	
1-5	EA00000263A	SUPPROT,ROCKER LEVER(C)	1	
1-6	EA00000264A	SUPPROT,INJECTOR CLAMP	4	
1-7	EA00003001C		4	
1-8	EA00003002C		4	
1-9	AF02110000E4	SCREW,RKRLEVERADJUSTING	8	
2	HRJ0370110A4	SCREW, HEX FLANGE HEAD CAP	5	
3	26106-080532	HEX FLANGE BOLT	2	
4	EA00000267A	BRIDGE ASSY,VALVE	8	
5	EA00000268D		8	
6	HRJ0370202A4	SCREW, VALVE BRIDGE ADJUSTING	8	
7	HRJ0370203A4	NUT, VALVE ADJUSTING	8	
8	HRJ0370300A4	SHIM, VALVE BRIDGE	8	
9	26106-080602	SCREW,HEXFLANGEHEADCAP	3	

FIG E033 Branson 7845RP(US)	MOTER, STARTIONG	Year/Month 2020/02

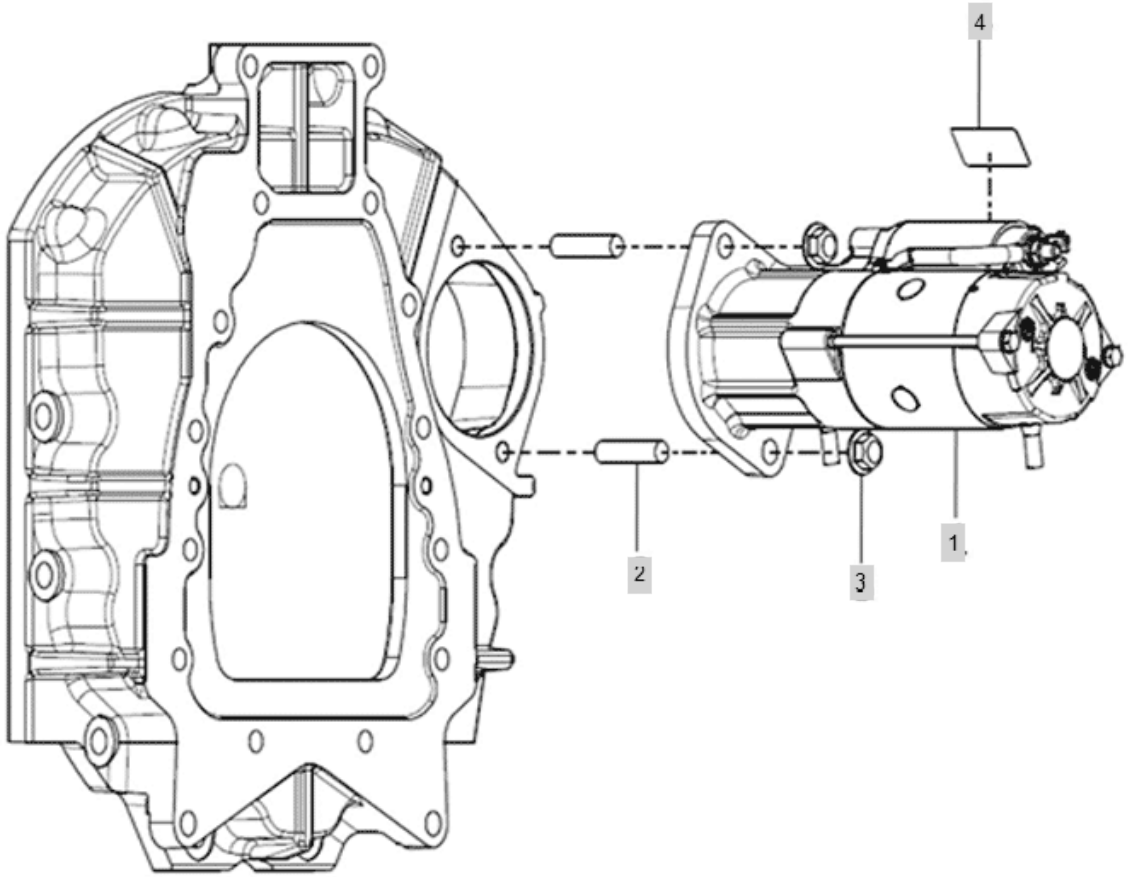

FIG E033 Branson 7845RP(US)	MOTER, STARTIONG	Year/Month 2020/02

KeyNo.	Part Number	Part Name	Quantity	Other
1	EA00004048A	STARTER(JHEECO)	1	
2	26216-120302	STUDBOLT	2	
3	26367-120002	NUT	2	
4	EA00001492A	NAME PLATE, STARTING MOTOR	1	

FIG E034 Branson 7845RP(US)	PLUMBING, TURBO CHARGER	Year/Month 2020/02

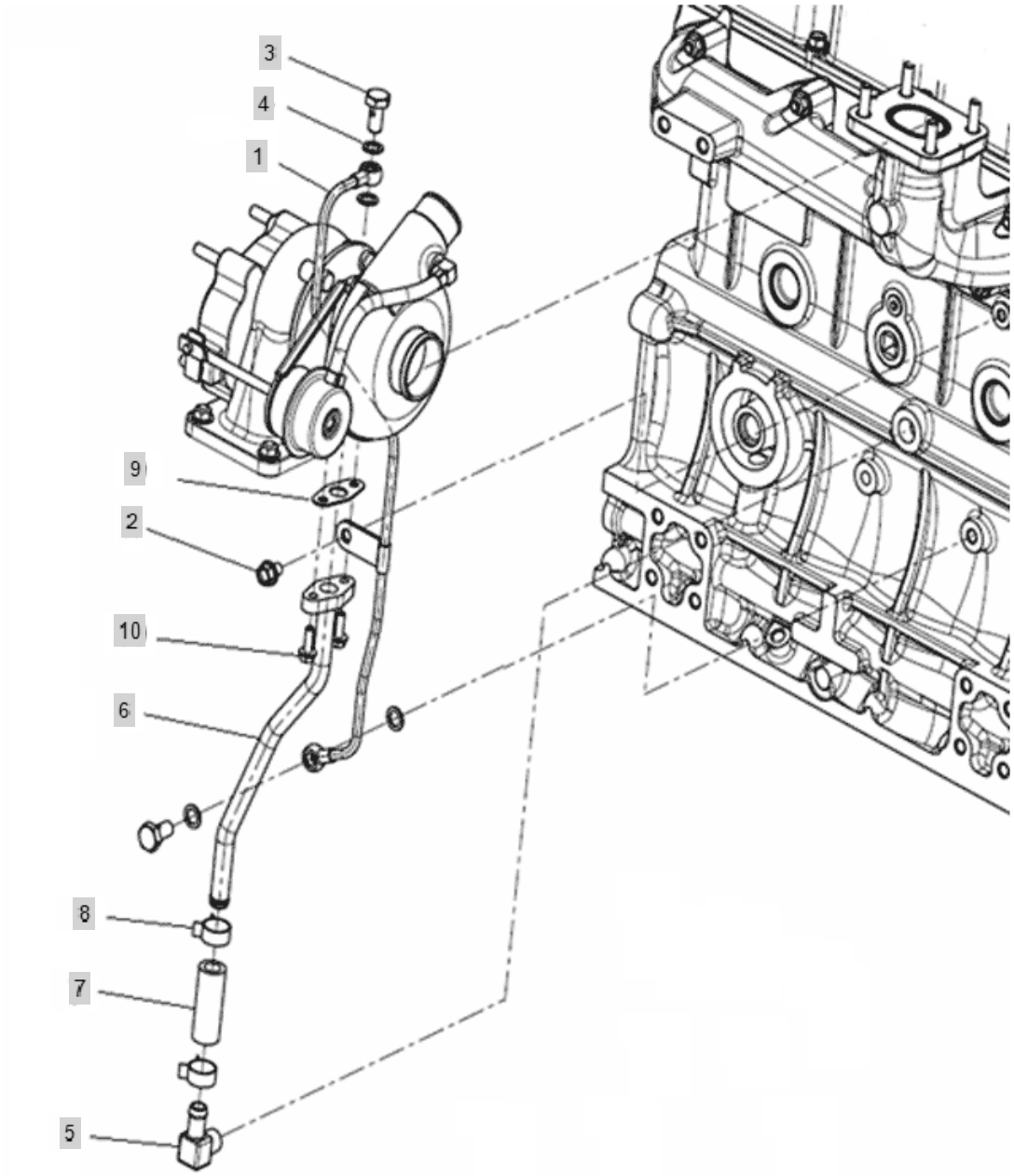

FIG E034 Branson 7845RP(US)	PLUMBING, TURBO CHARGER	Year/Month 2020/02

KeyNo.	Part Number	Part Name	Quantity	Other
1	EA00003729A	TUBE, TUR OIL SUPPLY	1	
2	26106-080122	Bolt, Hexa (8-12)	1	
3	HA09220000A4	SCREW,BANJOCONNECTOR	2	
4	23414-100000	PLAIN WASHER (D10)	4	
5	HRF1105000A4	ELBOW,PLAIN UNION	1	
6	EA00003730A	TUBE, TUR OIL DRAIN	1	
7	HRU0430900C3	HOSE, PLAIN	1	
8	23000-022000	CLAMP,HOSE	2	
9	HP09350000A4	GASKET,OILDRAIN	1	
10	26106-060182	Bolt, Hexa (6-18)	2	

FIG E035 Branson 7845RP(US)	TURBO CHARGER	Year/Month 2020/02

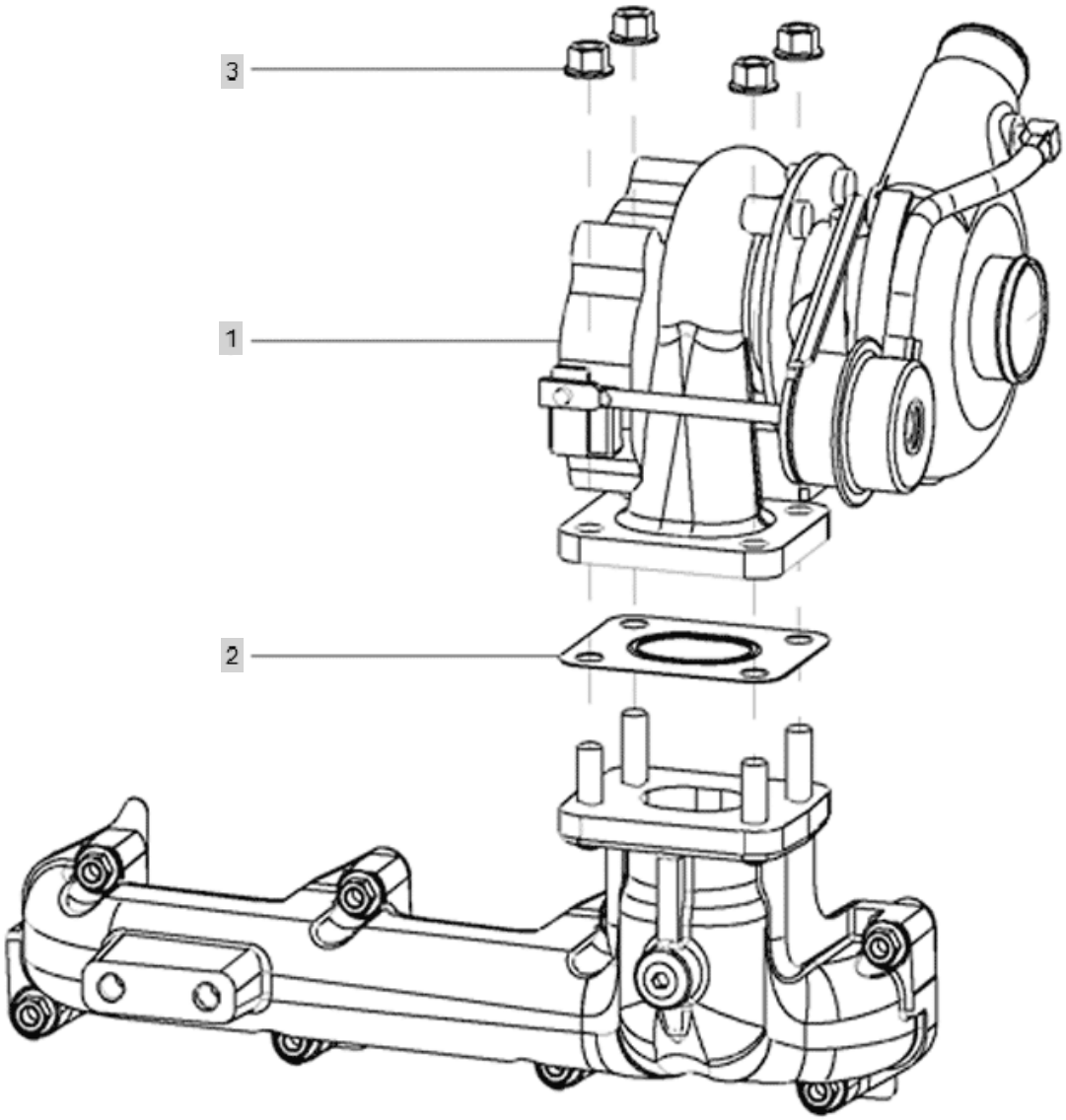

FIG E035 Branson 7845RP(US)	TURBO CHARGER	Year/Month 2020/02

KeyNo.	Part Number	Part Name	Quantity	Other
1	EA00000369A	TURBO CHARGER (D3400T)	1	
2	EA00000286B	GASKET, SILENCER	1	
3	EA00001016A	NUT,PLANGE	4	

FIG E036 Branson 7845RP(US)	COVER, VALVE	Year/Month 2020/02

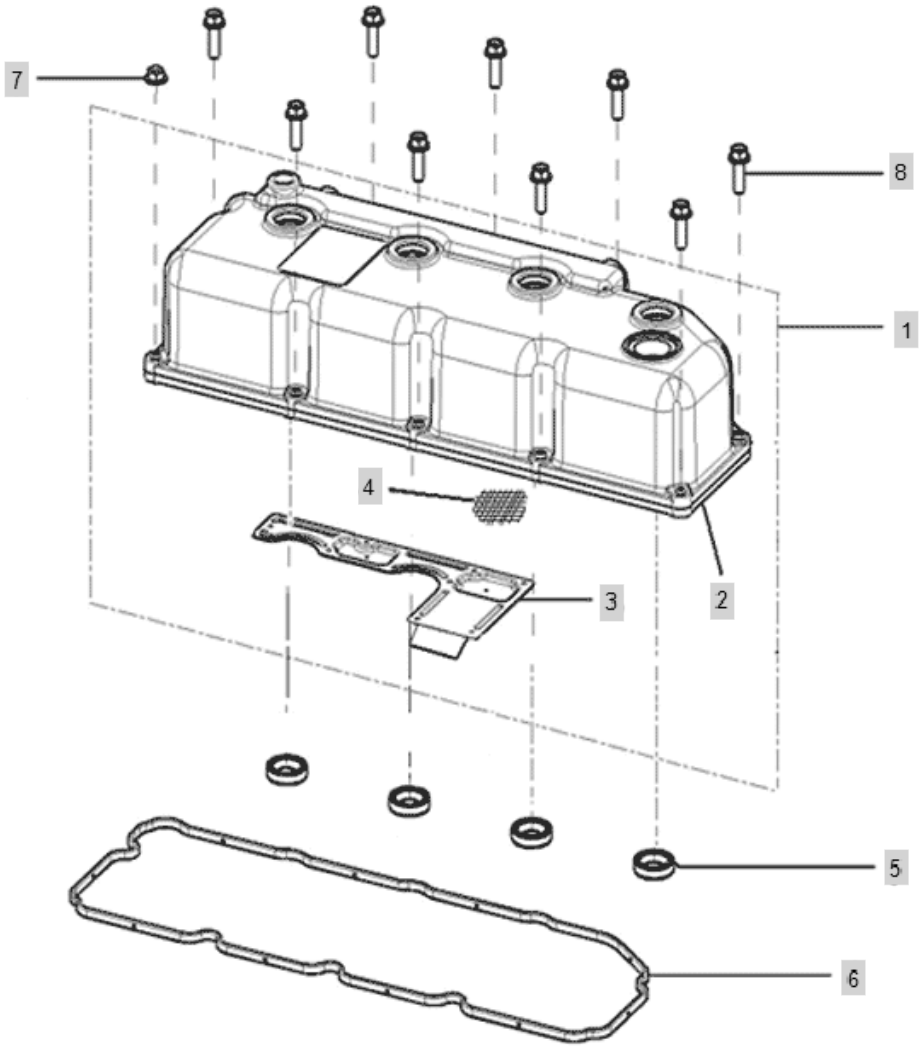

FIG E036 Branson 7845RP(US)	COVER, VALVE	Year/Month 2020/02

KeyNo.	Part Number	Part Name	Quantity	Other
1	EA00000271D	HEAD COVER ASSY	1	
2	EA00000272E	COVER, VALVE	1	
3	EA00000116B	PLATE, BAFFLE	1	
4	HC03720000B4	BAFFLE	4	
5	HRJ0450300A4	OIL SEAL,FULE TUBE	4	
6	EA00003942A	GASKET,VALVE COVER	1	
7	26367-080002	HEX FLANGE NUT (Φ8)	1	
8	26106-080252	SCREW,HEXFLANGEHEADCAP	9	

FIG E037 Branson 7845RP(US)	PUMP, WATER	Year/Month 2020/02

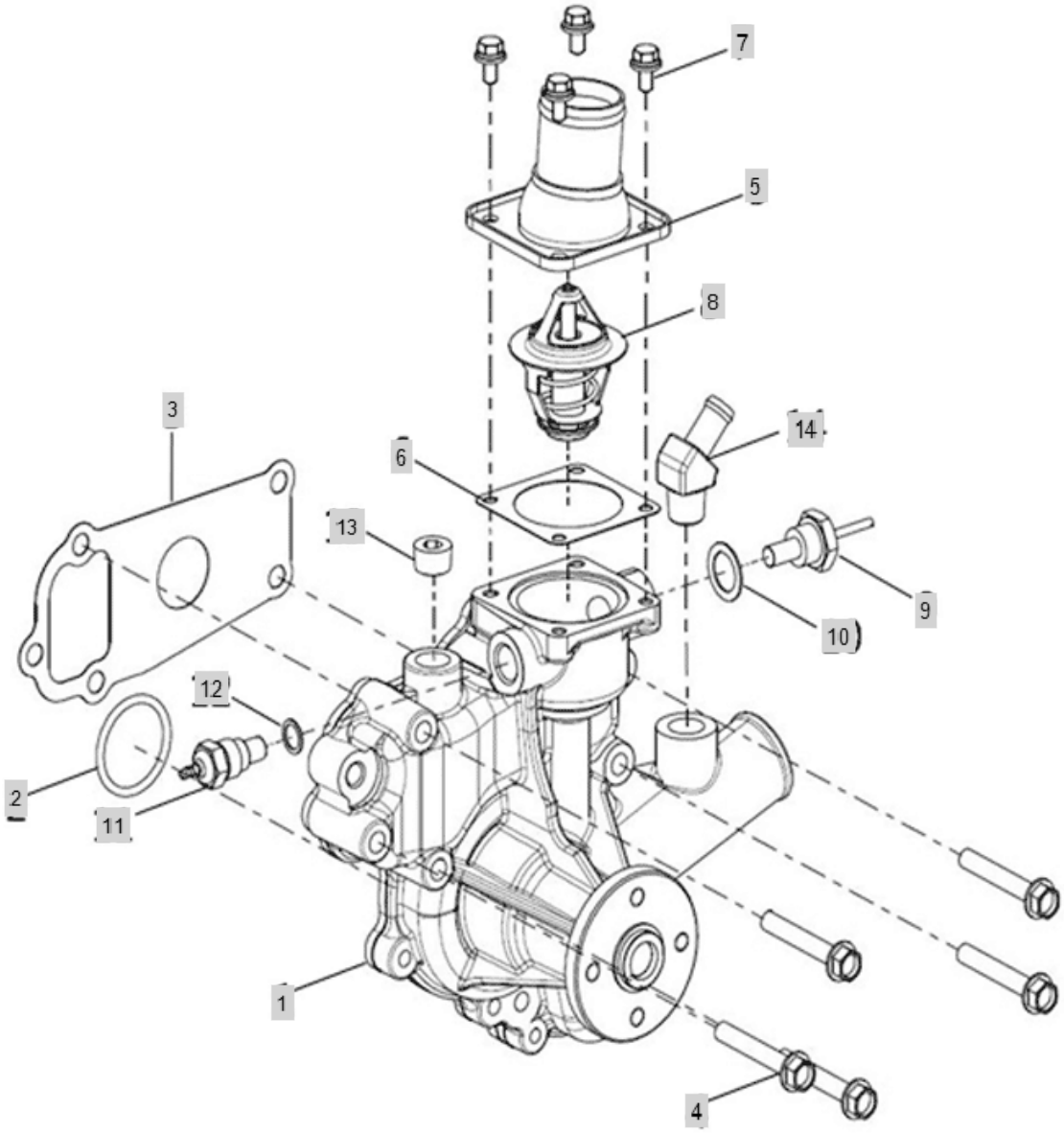

FIG E037 Branson 7845RP(US)	PUMP, WATER	Year/Month 2020/02

KeyNo.	Part Number	Part Name	Quantity	Other
1	EA00000275D	Pump Ass'y, Cooling Water	1	
2	24311-000360	O-RING, DYNAMIC (Φ36)	1	
3	EA00000280A	GASKET, WATER PUMP	1	
4	26106-080552	HEX FLANGE BOLT (D80)	5	
5	HN12100000B3	COVER, THERMOSTAT	1	
6	HH12110000A4	PACKING,THERMOSTATCOVER	1	
7	26014-060142	BOLT	4	
8	EA00001875A	THERMOSTAT	1	
9	HH12210000A3	SENSOR,GLOWPLUG	1	
10	23414-160000	WASHER,SEALING	1	
11	HH12190000A3	WATER TEMP SENSOR	1	
12	23414-100014	PACKING,COPPER	1	
13	23871-030000	PLUG, PIPE	1	
14	TA00038251A	COUPLER 3/8	1	

FIG E038 Branson 7845RP(US)	MANIFOLD, EXHAUST	Year/Month 2020/02

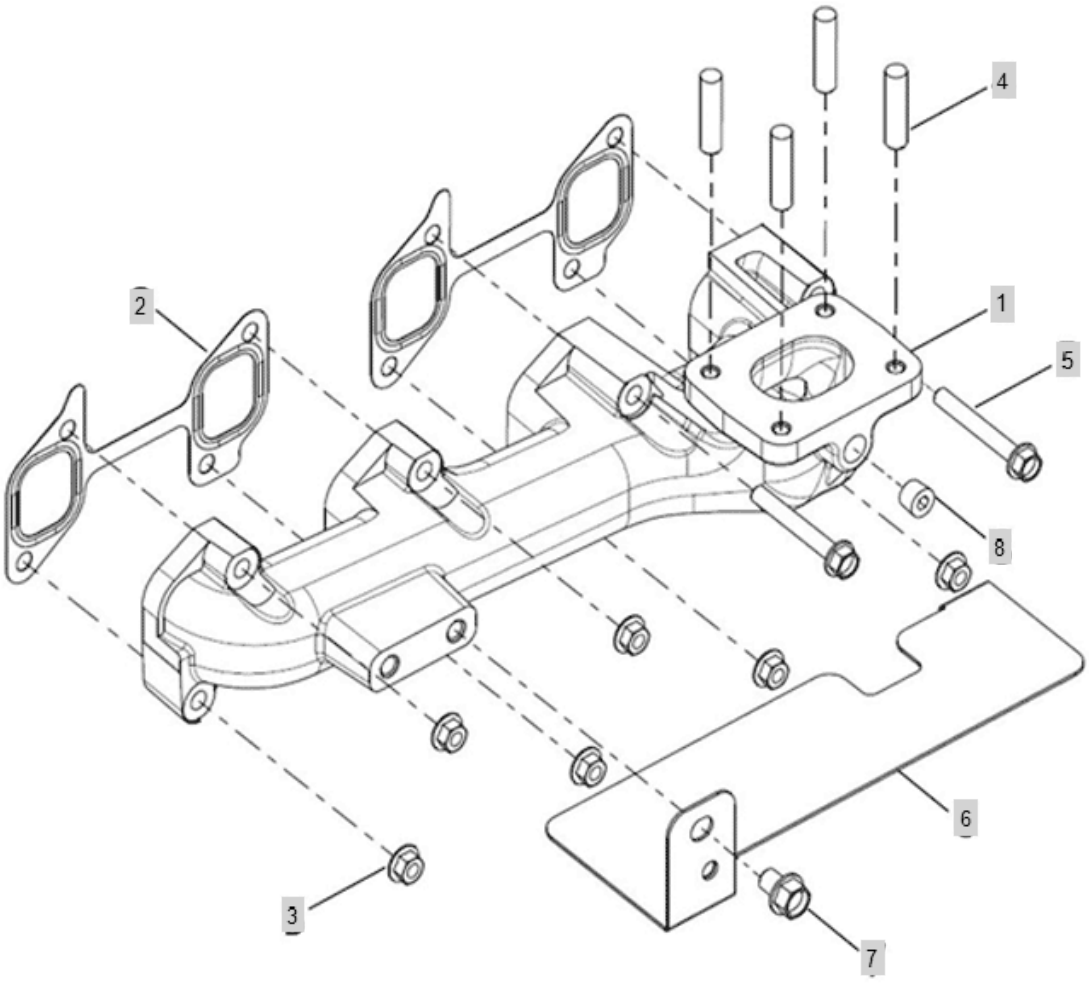

FIG E038 Branson 7845RP(US)	MANIFOLD, EXHAUST	Year/Month 2020/02

KeyNo.	Part Number	Part Name	Quantity	Other
1	EA00003684A	MANIFOLD, EXHAUST	1	
2	EA00000283A	GASKET,EXHAUST MANIFOLD	2	
3	EA00000645A	NUT,HEXAGON FLANGE	6	
4	EA00001015A	STUD BOLT	4	
5	26106-080602	SCREW,HEXFLANGEHEADCAP	2	
6	EA00003583A	PLATE	1	
7	26106-100142	Bolt, Hexa (10-14)	1	
8	23871-020000	Plug, Pipe	1	

FIG E039 Branson 7845RP(US)	DPF	Year/Month 2020/02

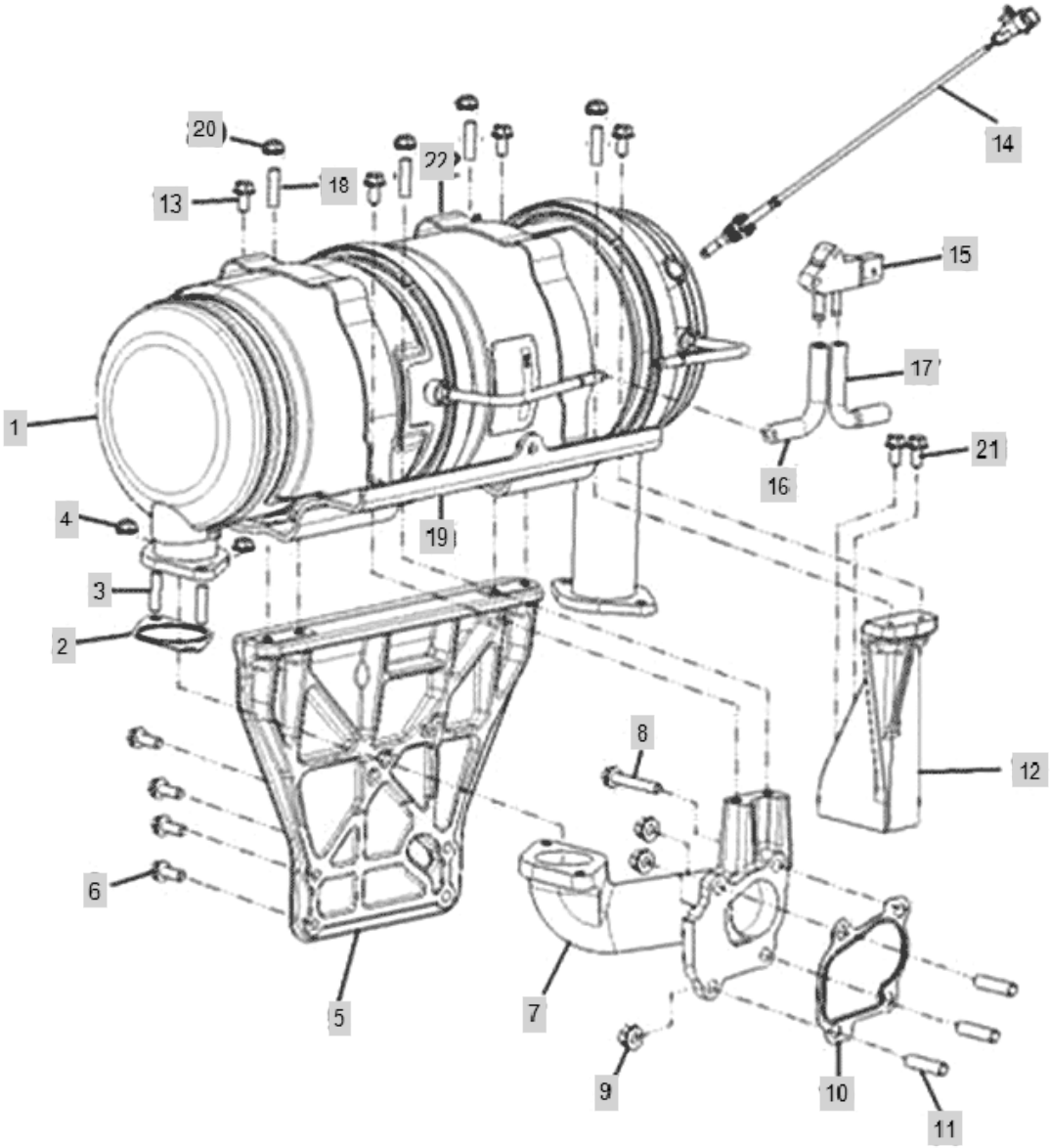

FIG E039 Branson 7845RP(US)	DPF	Year/Month 2020/02

KeyNo.	Part Number	Part Name	Quantity	Other
1	EA00003716C	DPF ASSY	1	
2	EA00003929A	GASKET	1	
3	26216-080222	Bolt, Stud (8-22)	2	
4	EA00000645A	NUT,HEXAGON FLANGE	2	
5	EA00003727C	DPF SUPPORT PLATE	1	
6	26106-080252	SCREW,HEXFLANGEHEADCAP	4	
7	EA00003688A	TURBO HOUSING	1	
8	26106-100502	FLANGEBOLT	1	
9	EA00001016A	NUT,PLANGE	3	
10	EA00000553A	GACKET(T/C OUT)	1	
11	EA00001015A	STUD BOLT	3	
12	EA00003687A	DPF SUPPORT	1	
13	26106-080162	SCREW,HEXFLANGEHEADCAP	4	
14	EA00003312A	EXHAUST GAS TEMP. SENSOR	1	
15	EA00003291A	DIFFERENTIAL PRESSURE SENSOR	1	
16	EA00003761A	SENSOR HOSE(IN)	1	
17	EA00003762A	SENSOR HOSE(OUT)	1	
18	26216-080252	STUDBOLT	4	
19	EA00003956A	DPF MAIN BRACKET	1	
20	26367-080002	HEX FLANGE NUT (Φ8)	4	
21	26106-080202	SQR FLANGE BOLT	2	
22	EA00003650A	BRACKET BEND	2	

FIG E040 Branson 7845RP(US)	CONNECTION, AIR INTAKE	Year/Month 2020/02

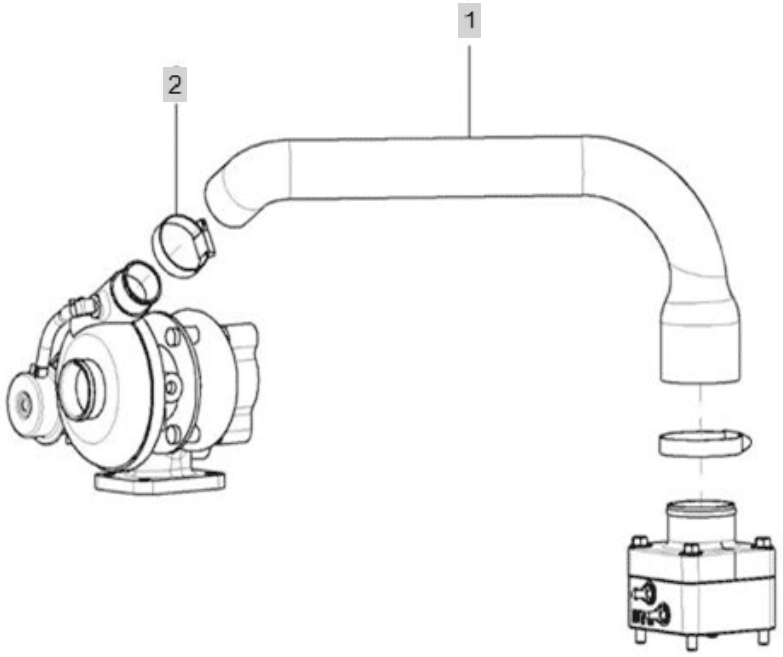

FIG E040 Branson 7845RP(US)	CONNECTION, AIR INTAKE	Year/Month 2020/02

KeyNo.	Part Number	Part Name	Quantity	Other
1	EA00003979A	INTAKE HOSE	1	
2	EA00003864A	CLAMP, HOSE	2	

FIG F001 Branson 7845RP(US)	FRONT AXLE HOUSING	Year/Month 2020/02

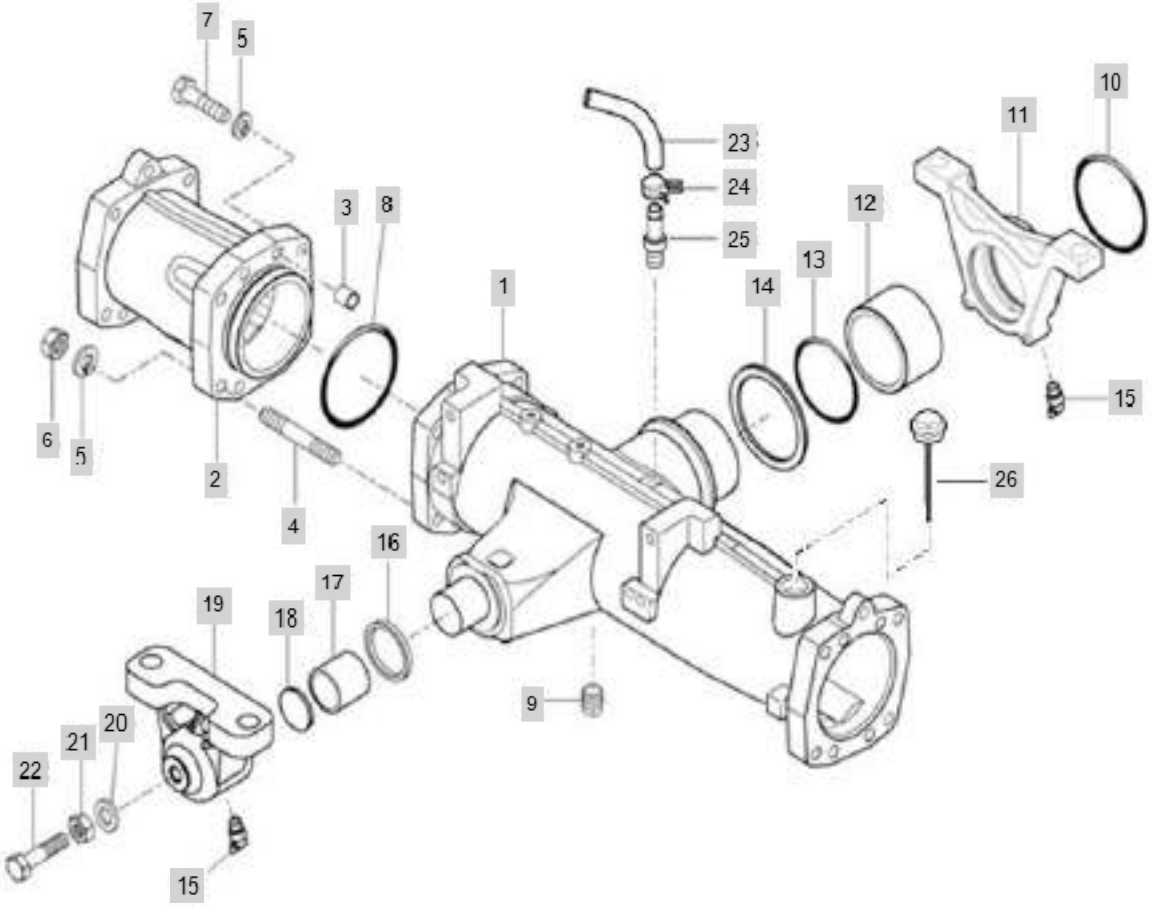

FIG F001 Branson 7845RP(US)	FRONT AXLE HOUSING	Year/Month 2020/02

KeyNo.	Part Number	Part Name	Quantity	Other
1	TA00048826A	HOUSING, FRONT AXLE	1	
2	TA00048827A	CASE, FRONT AXLE	1	
3	TA00049261A	PARALLEL PIN	2	
4	TA00049265A	STUD BOLT(M14XP2X50)	4	
5	22217-140000	WASHER, SPRING (Φ 14)	6	
6	26716-140002	NUT	4	
7	TT09190000A4	BOLT	2	
8	24321-001200	ORING (G-120)	1	
9	TA00049367A	PLUG , SQUARE	1	
10	TA00049407A	O-RING , 101.19X3.53	1	
11	TA00049080A	SUPPORT REAR	1	
12	TA00049084A	BUSH	1	
13	TA00049108A	O-링	1	
14	TA00049099A	COLLAR, 108.5X126X3.2	1	
15	24761-040000	NIPPLEB,GRESE	2	
16	24321-000550	SEAL,O-RING	1	
17	TA00049085A	BUSH(50X55X35)	1	
18	TA00049098A	SPACER	1	
19	TA00049083A	SUPPORT FRONT	1	
20	TA00049408A	WASHER , SEAL	1	
21	TA00049409A	NUT , HEX	1	
22	TA00049410A	BOLT , HEX	1	
23	TA00050683A	AIR BREATHER HOSE	1	
24	23080-011000		1	
25	TA00049894A	CONNECTOR	1	
26	TA00049893A	OIL-CAP	1	

FIG F002 Branson 7845RP(US)	FRONT DIFFERENTIAL GEAR	Year/Month 2020/02

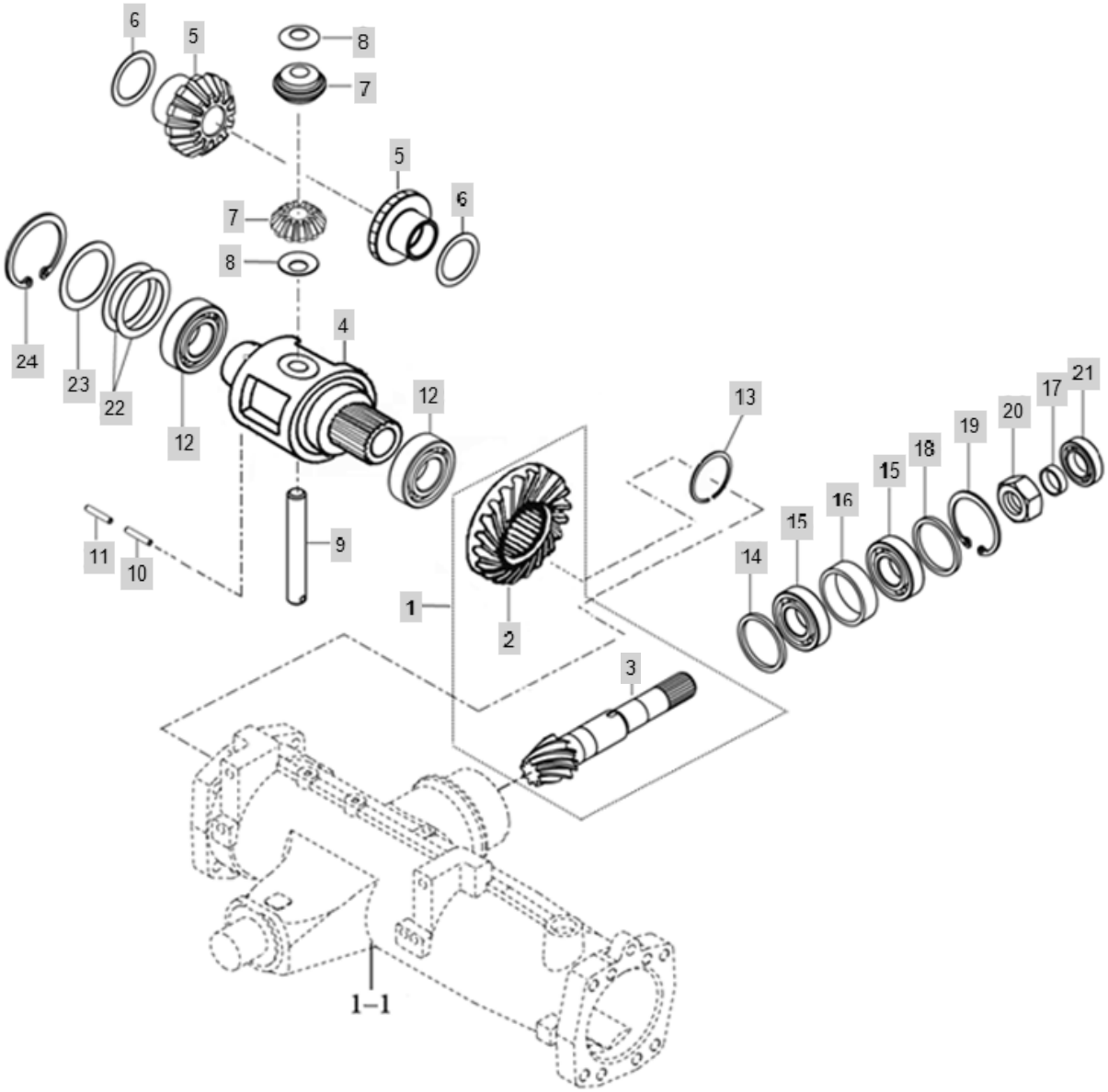

FIG F002 Branson 7845RP(US)	FRONT DIFFERENTIAL GEAR	Year/Month 2020/02

KeyNo.	Part Number	Part Name	Quantity	Other
1	TA00049062A	GEAR SET, BEVEL 9-24T	1	
2	TA00049064A	GEAR, 24T	1	
3	TA00049063A	PINION, BEVEL 9T	1	
4	TA00049056A	CASE, DIFF	1	
5	TA00049057A	GEAR, DIFF SIDE	2	
6	TA00049058A	WASHER, 40X58X1	2	
7	TA00049059A	PINION, DIFF	2	
8	TA00049060A	WASHER, DIFF PINION	2	
9	TA00049061A	SHAFT, DIFF PINION	1	
10	22351-050036	`	1	
11	22351-030036		1	
12	24101-062144	BEARING	2	
13	TA00049065A	SNAP RING, C TYPE	1	
14	TA00049068A	SHIM , 67X72X0.1	5	
15	24141-303060	BEARING(30306)	2	
16	TA00049069A	COLLAR, SPACE	1	
17	TA00049070A	SLEEVE	1	
18	TA00049071A	COLLAR, SPACE	1	
19	22252-000720	RING, CIRCLIP (Φ 72)	1	
20	TA00049072A	NUT, M30	1	
21	TA00049073A	SEAL, OIL 35X72X12	1	
22	TA00049066A	SHIM , 115X125X0.1	1	
23	TA00049067A	SHIM , 115X125X1.5	1	
24	22252-001250	RING,CIRCLIP(¢ 125)	1	

FIG F003 Branson 7845RP(US)	FRONT GEAR CASE I	Year/Month 2020/02

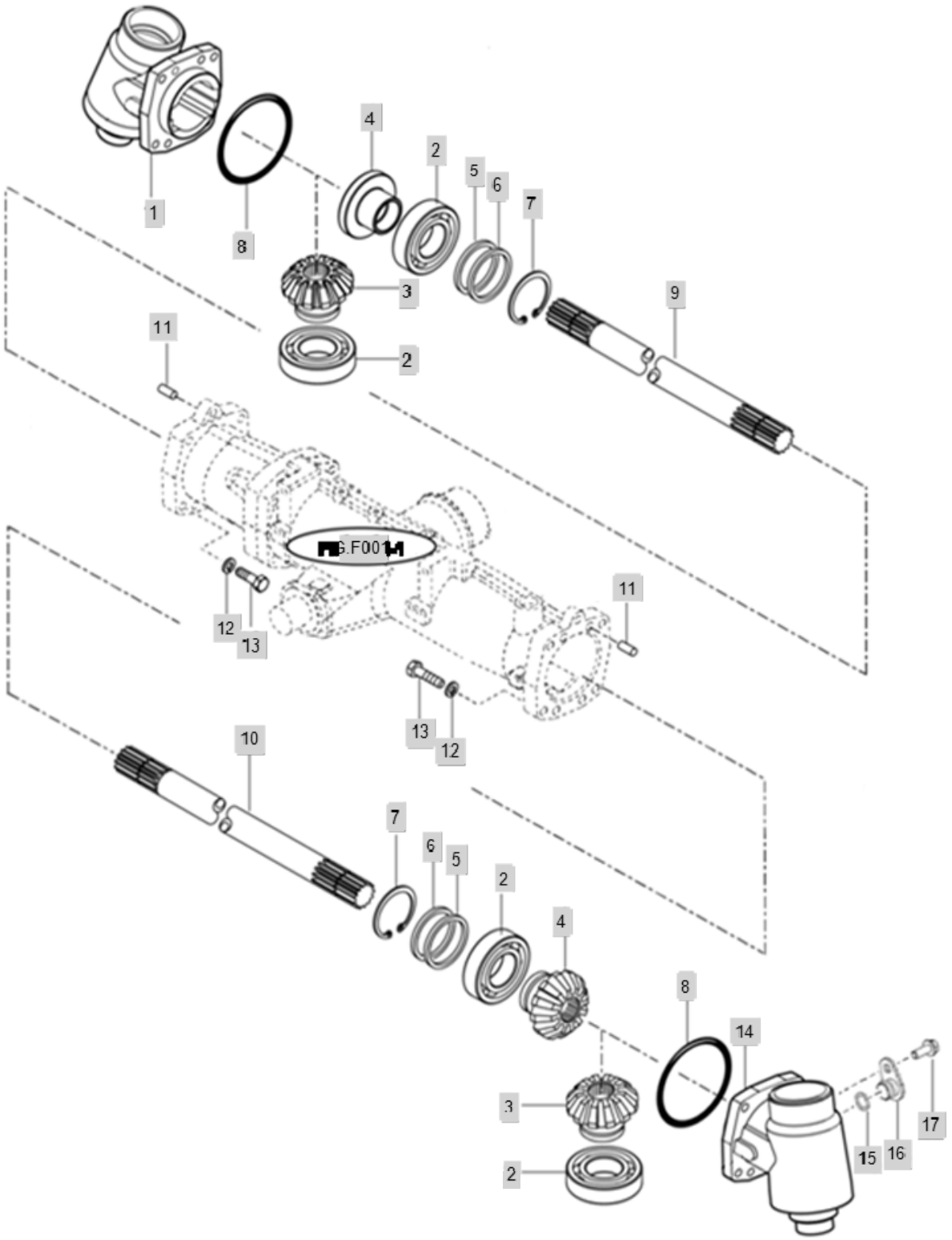

FIG F003 Branson 7845RP(US)	FRONT GEAR CASE Ⅰ	Year/Month 2020/02

KeyNo.	Part Number	Part Name	Quantity	Other
1	TA00049035A	CASE(A,,RH), FINAL	1	
2	24101-063080	DEEP GROOVE BALL BEARING	4	
3	TA00049300A	GEAR , BEVEL 17T	2	
4	TA00049301A	GEAR , BEVEL 10T	2	
5	TA00049101A	SHIM , 80X90X0.1	4	
6	TA00049102A	SHIM , 80X90X1.5	2	
7	22252-000900	RING, CIRCLIP (Φ 90)	2	
8	24321-001200	ORING (G-120)	2	
9	TA00049107A	SHAFT(RH)	1	
10	TA00049106A	SHAFT(LH)	1	
11	TA00049261A	PARALLEL PIN	4	
12	22217-140000	WASHER, SPRING (Φ 14)	12	
13	TT09190000A4	BOLT	12	
14	TA00049079A	CASE(A,LH), FINAL	1	
15	24311-000140	O-RING, DYNAMIC (Φ14)	1	
16	TA00050624A	CAP, SENSOR	1	
17	26013-080202	Bolt, Hexa (8-20)	1	
FIG.F001-1	F001		1	

FIG F004 Branson 7845RP(US)	FRONT GEAR CASE Ⅱ	Year/Month 2020/02

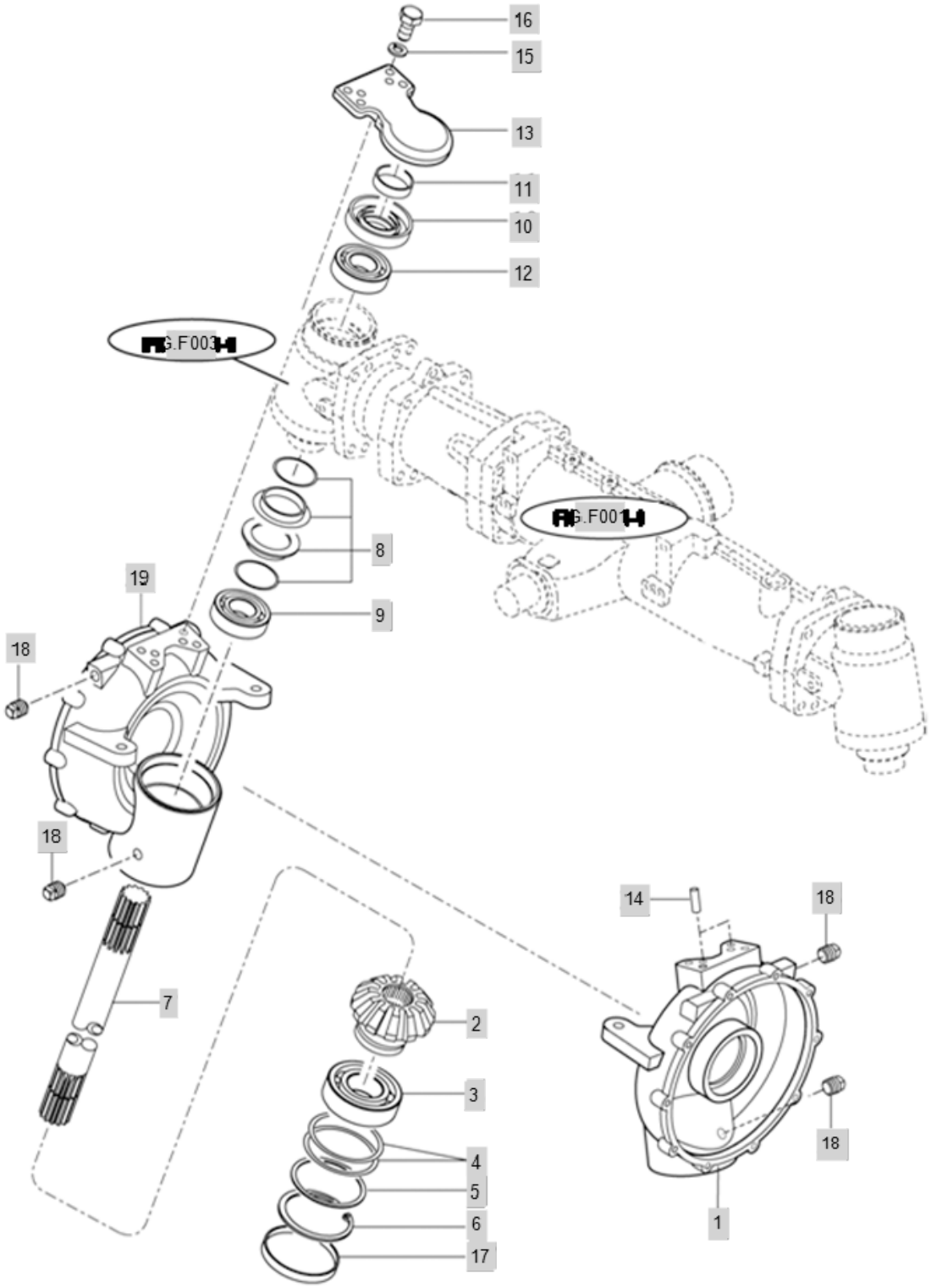

FIG F004 Branson 7845RP(US)	FRONT GEAR CASE Ⅱ	Year/Month 2020/02

KeyNo.	Part Number	Part Name	Quantity	Other
1	TA00049053A	CASE(B,LH), FINAL	1	
2	TA00049302A	GEAR , BEVEL 10T	2	
3	24101-063090	DEEP GROOVE BALL BEARING	2	
4	TA00049104A	SHIM , 88X100X0.1	4	
5	TA00049105A	SHIM , 88X100X1.5	2	
6	22252-001000	RING, CIRCLIP (Φ 100)	2	
7	TA00049110A	SHAFT	2	
8	TA00049365A	SEAL , MECHANICAL(D95)	2	
9	24101-062120	DEEP GROOVE BALL BEARING	2	
10	TA00049111A	SEAL , OIL	2	
11	TA00049112A	SLEEVE	2	
12	24101-062090	DEEP GROOVE BALL BEARING	2	
13	TA00049081A	ARM, FINAL CASE	2	
14	22312-120180	PARALLEL PIN	4	
15	22217-120000	WASHER, SPRING (Φ 12)	8	
16	TC54230000A4	BOLT M12X35	8	
17	TA00049113A	CAP	2	
18	TA00049366A	PLUG , SQUARE	4	
19	TA00049054A	CASE(B,RH), FINAL	1	
FIG.F001-1	F001		1	
FIG.F003-1	F003		1	

FIG F005 Branson 7845RP(US)	FRONT GEAR CASE Ⅲ	Year/Month 2020/02

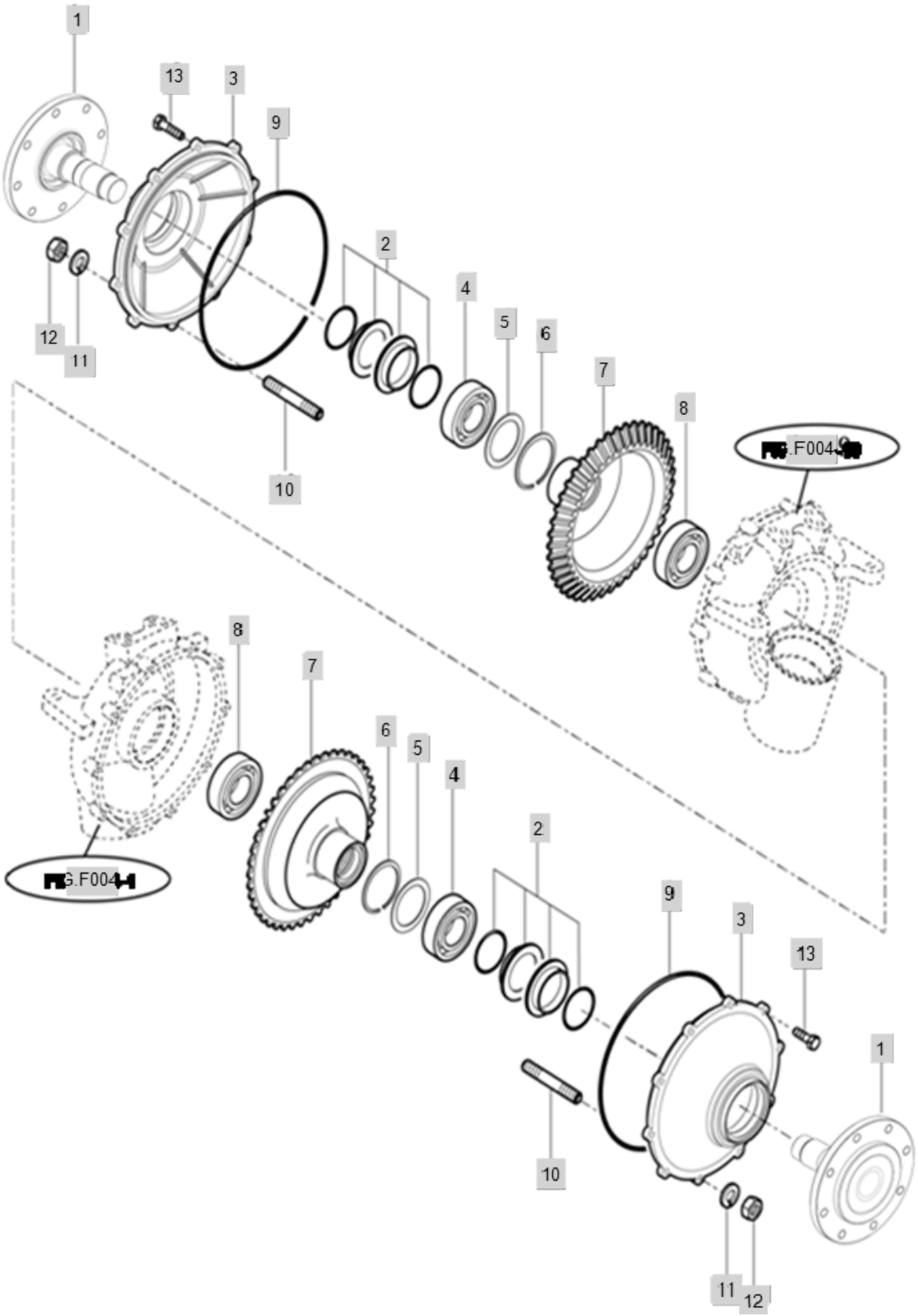

FIG F005 Branson 7845RP(US)	FRONT GEAR CASEⅢ	Year/Month 2020/02

KeyNo.	Part Number	Part Name	Quantity	Other
1	TA00049777A	SHAFT(WHEEL)	2	
2	TA00049364A	SEAL , MECHANICAL(D73)	2	
3	TA00049082A	COVER	2	
4	24101-063100	DEEP GROOVE BALL BEARING	2	
5	TA00049109A	WASHER, 50.5X60X3	2	
6	TA00049116A	SNAP RING , C TYPE	2	
7	TA00049303A	GEAR , BEVEL 10-43T	2	
8	24101-063090	DEEP GROOVE BALL BEARING	4	
9	24321-002900	O-RING	2	
10	TA00049267A	STUD BOLT(M10X28)	4	
11	22217-100000	WASHER, SPRING (Φ 10)	4	
12	26716-100002	Nut, Hexa (Φ10)	4	
13	26116-100302	HEXFLANGEBOLT	16	
FIG.F004-1	F004		1	
FIG.F004-19	F004		1	

FIG F006-1 Branson 7845RP(US)	POWER STEERING CYLINDER	Year/Month 2020/02

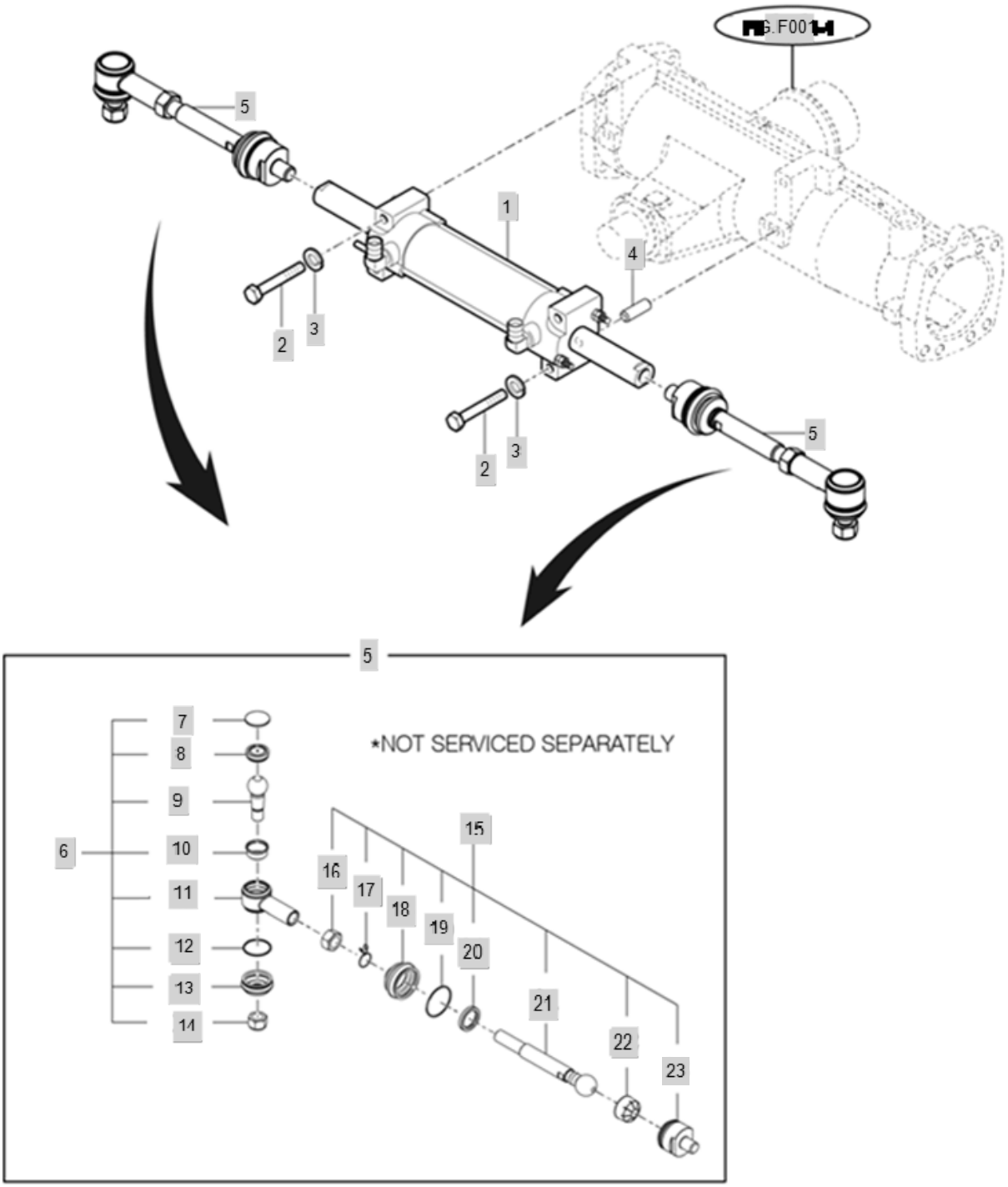

FIG F006-1 Branson 7845RP(US)	POWER STEERING CYLINDER	Year/Month 2020/02

KeyNo.	Part Number	Part Name	Quantity	Other
1	TA00049135A	PST CYLINDER	1	
2	TA00049390A	HEX BOLT(M12XP1.25X85)	4	
3	22217-120000	WASHER, SPRING (Φ 12)	4	
4	22312-120180	PARALLEL PIN	1	
5	TA00049702A	BALL JOINT ASSY	2	
6	TA00049368A	END ASSY, TIE ROD	2	
7	TA00049369A	COVER, BALL	2	
8	TA00049370A	SHEET B, BALL	2	
9	TA00049371A	STUD, BALL	2	
10	TA00049372A	SHEET A, BALL	2	
11	TA00049373A	SOCKET	2	
12	TA00049374A	SPRING	2	
13	TA00049375A	COVER, DUST	2	
14	TA00049387A	NUT(M18), NYLON	2	
15	TA00049700A	SOCKET ASSY, BALL	2	
16	26736-200002	NUT	2	
17	TA00049696A	SPRING A	2	
18	TA00049695A	COVER, DUST	2	
19	TA00049697A	SPRING B	2	
20	TA00049699A	PLUG	2	
21	TA00049694A	STUD, BALL	2	
22	TA00049698A	SEAT, BALL	2	
23	TA00049693A	SOCKET, BALL	2	
FIG.F001-1	F001		1	

FIG F006-2 Branson 7845RP(US)	POWER STEERING CYLINDER(2019.04~)	Year/Month 2020/02

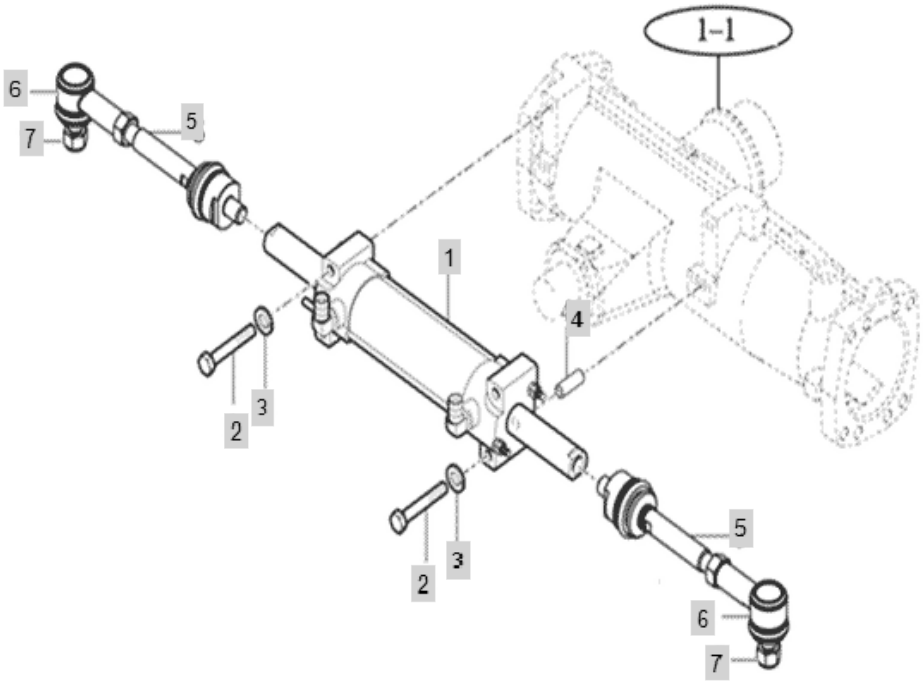

FIG F006-2 Branson 7845RP(US)	POWER STEERING CYLINDER(2019.04~)	Year/Month 2020/02

KeyNo.	Part Number	Part Name	Quantity	Other
1	TA00049135A	PST CYLINDER	1	
2	TA00049390A	HEX BOLT(M12XP1.25X85)	4	
3	22217-120000	WASHER, SPRING (Φ 12)	4	
4	22312-120180	PARALLEL PIN	1	
5	TA00049700A	SOCKET ASSY, BALL	2	
6	TA00059865A	END ASSY, TIE ROD	2	
7	26352-180002	U NUT,HEX	2	

FIG T001 Branson 7845RP(US)	MAIN DRIVE SHAFT ASS`Y	Year/Month 2020/02

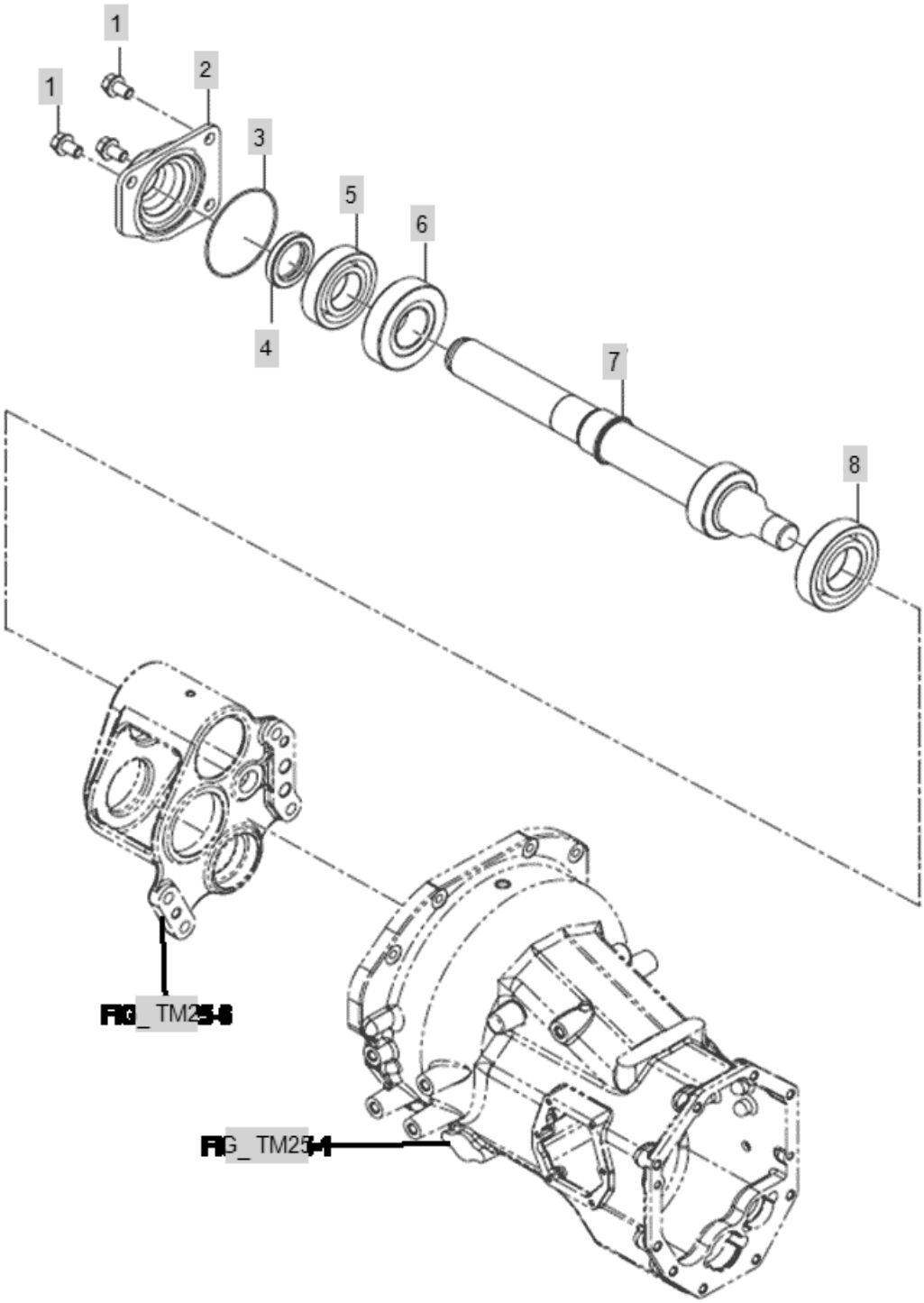

FIG T001 Branson 7845RP(US)	MAIN DRIVE SHAFT ASS`Y	Year/Month 2020/02

KeyNo.	Part Number	Part Name	Quantity	Other
1	26106-100162	SCREW,HEXFLANGEHEADCAP	3	
2	TA00033550A	HOLDER, MAIN SHAFT	1	
3	24341-000800	O-RING, FIX (Φ80)	1	
4	FT39150000A4	OILSEAL	1	
5	24101-062074	BALL BEARING (#6207)	1	
6	TA00033549A	GEAR 30T	1	
7	TA00033548A	SHAFT, MAIN INPUT	1	
8	24101-062084	Bearing, Ball (#6208)	1	
FIG_TM25-6	T025		1	
FIG_TM25-1	T025		1	

FIG T002 Branson 7845RP(US)	MAIN DRIVEN SHAFT ASS`Y	Year/Month 2020/02

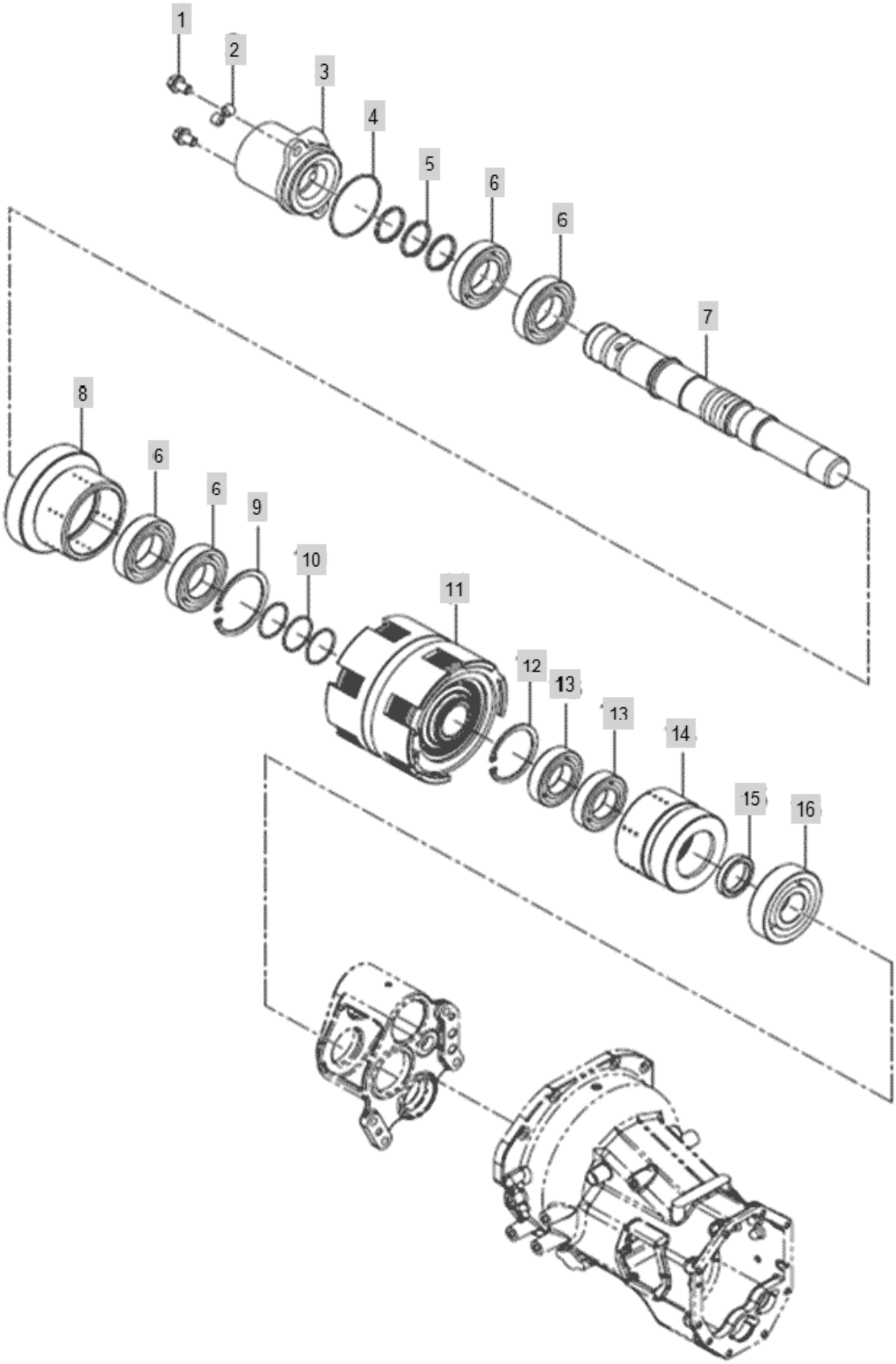

FIG T002 Branson 7845RP(US)	MAIN DRIVEN SHAFT ASS`Y	Year/Month 2020/02

KeyNo.	Part Number	Part Name	Quantity	Other
1	26106-080202	SQR FLANGE BOLT	2	
2	23871-010000	PLUG	2	
3	TA00033564C	HOLDER, SHUTTLE	1	
4	24341-000590	O RINGS	1	
5	TA00033554A	SEALING(FR_INPUT)	3	
6	24101-060074	Bearing, Ball (#6007)	4	
7	TA00033553D	SHAFT, SHUTTLE	1	
8	TA00033555B	GEAR, FRONT CLUTCH	1	
9	22252-000620	RING, CIRCLIP (Φ 62)	1	
10	24341-000320	O-RING, FIX (Φ32)	3	
11	TA00033558E	ASS'Y, FRONT/REAR CLUTCH	1	
12	22252-000550	RING, CIRCLIP (Φ 55)	1	
13	24101-060064	Bearing, Ball (#6006)	2	
14	TA00033556B	GEAR, REAR CLUTCH	1	
15	TA00033557A	SPACER, SHUTTLE	1	
16	24101-063064	Bearing, Ball (#6306)	1	

FIG T003 Branson 7845RP(US)	IDLE SHAFT ASS`Y	Year/Month 2020/02

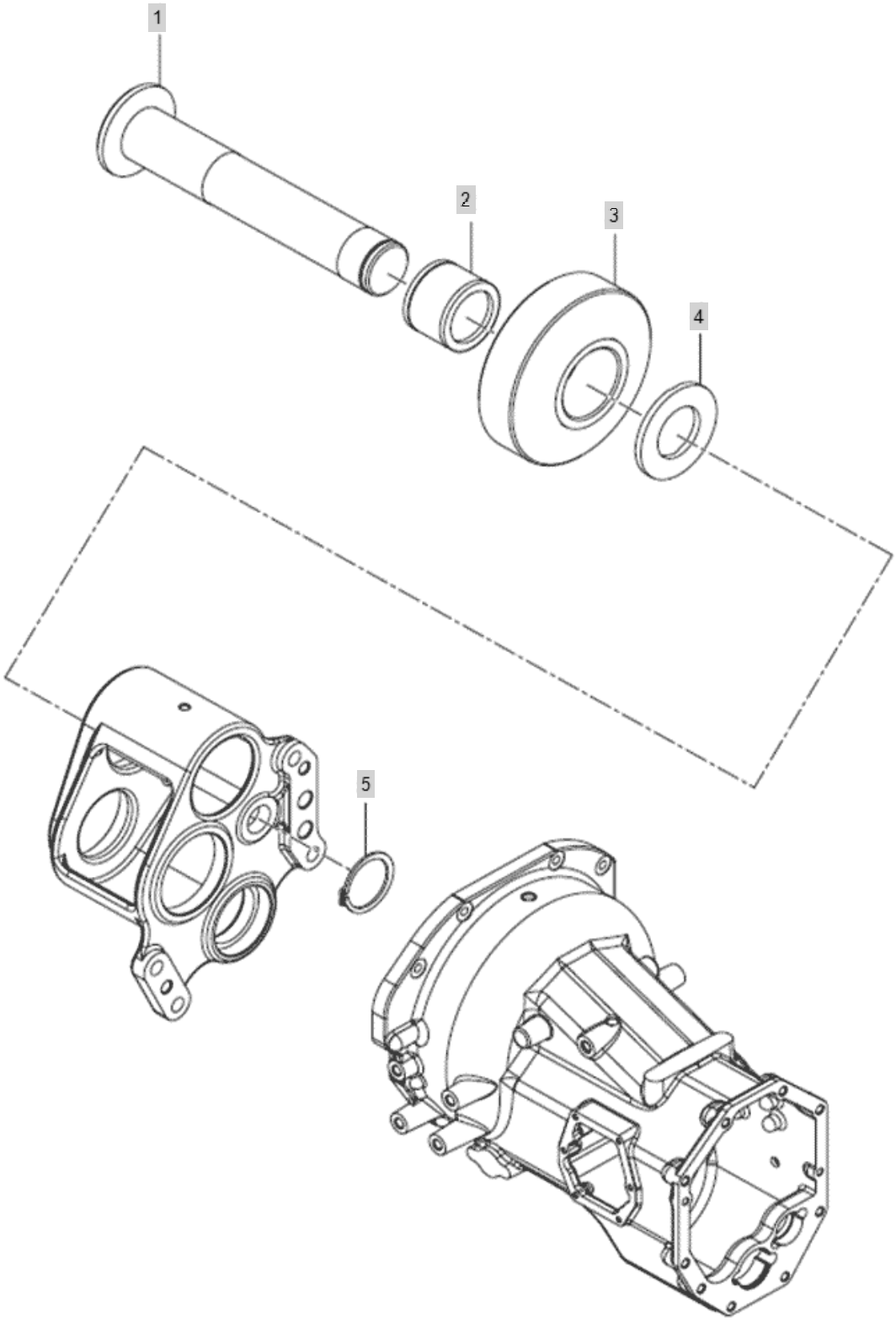

FIG T003 Branson 7845RP(US)	IDLE SHAFT ASS`Y	Year/Month 2020/02

KeyNo.	Part Number	Part Name	Quantity	Other
1	TA00033568B	SHAFT, REAR IDLE	1	
2	TA00033569A	NEEDLE ROLLER BEARING	1	
3	TA00033567A	GEAR, REAR IDLE	1	
4	TA00034090A	THRUST WASHER	1	
5	22242-000250	SNAP RING, SHAFT (Φ 25)	1	

FIG T004 Branson 7845RP(US)	MAIN SHIFT DRIVE SHAFT ASS`Y	Year/Month 2020/02

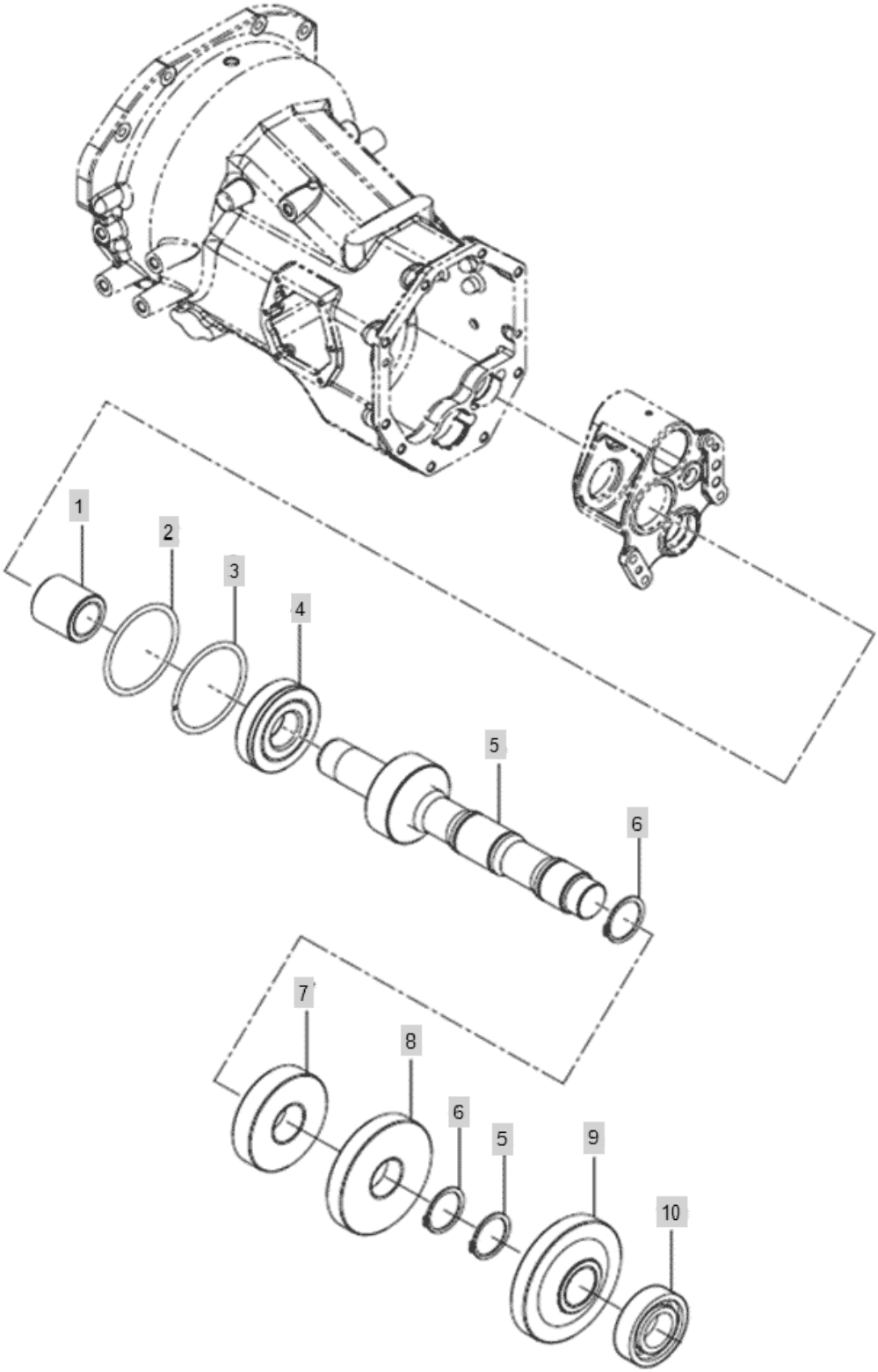

FIG T004 Branson 7845RP(US)	MAIN SHIFT DRIVE SHAFT ASS`Y	Year/Month 2020/02

KeyNo.	Part Number	Part Name	Quantity	Other
1	TA00033565A	COUPLING, SHUTTLE	1	
2	TA00037981A	WASHER(80X72.5X1.2)	1	
3	24242-000720	SANP RING	1	
4	24111-063064	BALLBEARING6306	1	
5	TA00038389A	DRIVE SHAFT, GEAR	1	
6	22242-000340	SNAP RING, SHAFT (Φ 34)	3	
7	TA00033573A	SECOND GEAR(32T), MAIN SHIFT DRIVE	1	
8	TA00033574A	THIRD GEAR(27T), MAIN SHIFT DRIVE	1	
9	TA00033575A	FOURTH GEAR(25T), MAIN SHIFT DRIVE	1	
10	TT39090000A4	BALLBEARINGTMB206	1	

FIG T005 Branson 7845RP(US)	MAIN SHIFT DRIVEN SHAFT ASS`Y	Year/Month 2020/02

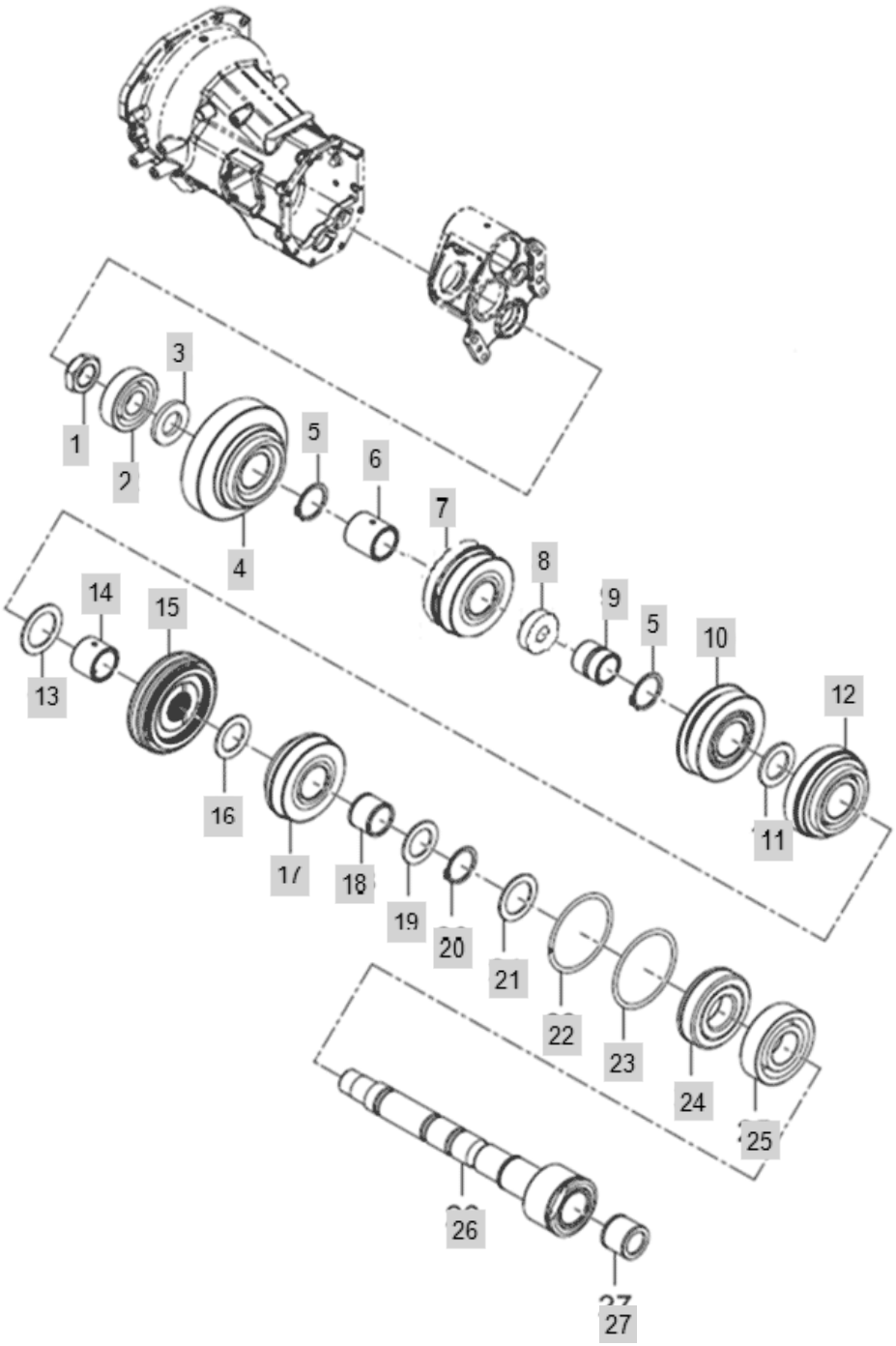

FIG T005 Branson 7845RP(US)	MAIN SHIFT DRIVEN SHAFT ASS`Y	Year/Month 2020/02

KeyNo.	Part Number	Part Name	Quantity	Other
1	TA00033578A	NUT, MAIN SHIFT DRIVEN	1	
2	24101-063054	BALL BEARING #6305	1	
3	TA00033581A	SPACER(46X26X5)	1	
4	TA00040903A	MAIN SHIFT FIRST GEAR	1	
5	22242-000500	SNAP RING, SHAFT (Φ50)	2	
6	TA00033583C	BUSH(37X29.7X38)	1	
7	TA00040907A	SYCHRO ASST	1	
8	TA00039634B	SPLINE SLEEVE	1	
9	TA00033584C	BUSH(37X29.7X37.5)	1	
10	TA00039632A	GEAR_DRIVEN_2ST	1	
11	TA00033582A	SPACER(46X29.7X3)	1	
12	TA00035146B	THIRD GEAR, MAIN SHIFT DRIVEN	1	
13	TA00037994A	WASHER(2T)	1	
14	TA00033585C	BUSH(37X29.7X28.5)	1	
15	TA00036758A	SYNCHRO ASS'Y	1	
16	TA00038003A	WASHER(40X30X2)	1	
17	TA00035149B	FOURTH GEAR, MAIN SHIFT DRIVEN	1	
18	24161-303527	BEARING,NEEDLE	1	
19	TA00033579A	SPACER(46X30X3)	1	
20	22242-000350	SNAP RING, SHAFT (Φ 35)	1	
21	TA00033580A	SPACER(50X35X2)	1	
22	24242-000800	SANP RING	1	
23	TA00037980A	WASHER(86X80.5X1)	1	
24	24111-063074	BEARING	1	
25	24101-063074	Bearing, Ball (#6307)	1	
26	TA00036538B	SHAFT, MAIN SHIFT DRIVEN	1	
27	TA00036546A	NEEDLE BEARING(25X35X30)	1	

FIG T006-1 Branson 7845RP(US)	RANGE SHIFT DRIVE SHAFT	Year/Month 2020/02

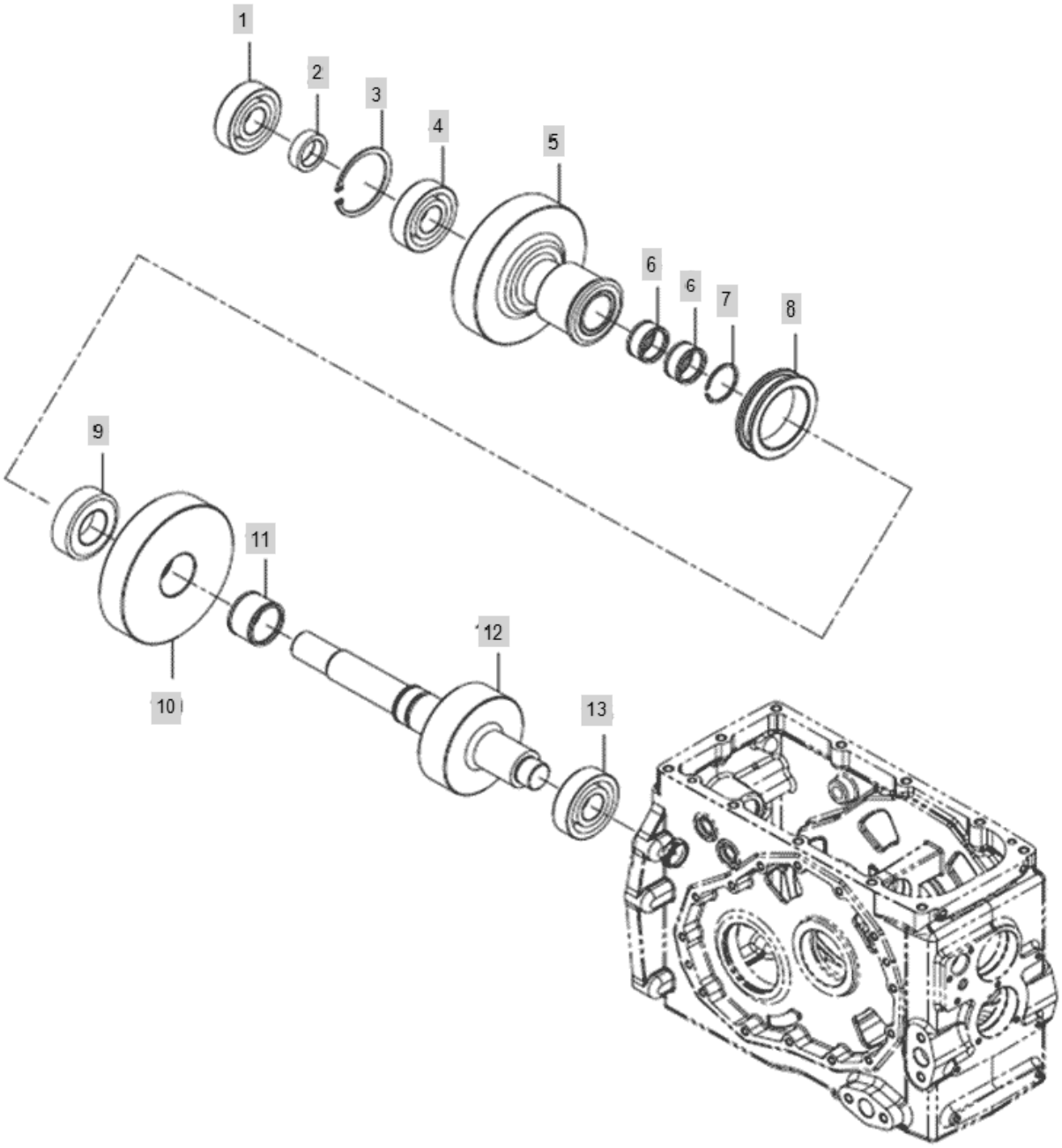

FIG T006-1 Branson 7845RP(US)	RANGE SHIFT DRIVE SHAFT	Year/Month 2020/02

KeyNo.	Part Number	Part Name	Quantity	Other
1	CT85150000A4	Bearing #6305	2	
2	TA00033598A	SPACER(35X25X10)	1	
3	22252-000620	RING, CIRCLIP (Φ 62)	1	
4	24101-063054	BALL BEARING #6305	1	
5	TA00035153E	M GEAR, SUB SHIFT	1	
6	24161-283317	NEEDLE BEARING	2	
7	22242-000350	SNAP RING, SHAFT (Φ 35)	1	
8	TA00033597A	SHIFTER(M-C)	1	
9	TA00033596C	SPLINE COLLAR(M-C)	1	
10	TA00033600D	C GEAR, SUB SHIFT	1	
11	24161-354027	BEARING 354027	1	
12	TA00033595C	SHAFT, SUB SHIFT DRIVE	1	
13	TA00018445A	ROLLER BEARING NJ305E	1	

FIG T006-2 Branson 7845RP(US)	RANGE SHIFT DRIVE SHAFT(2019.04~)	Year/Month 2020/02

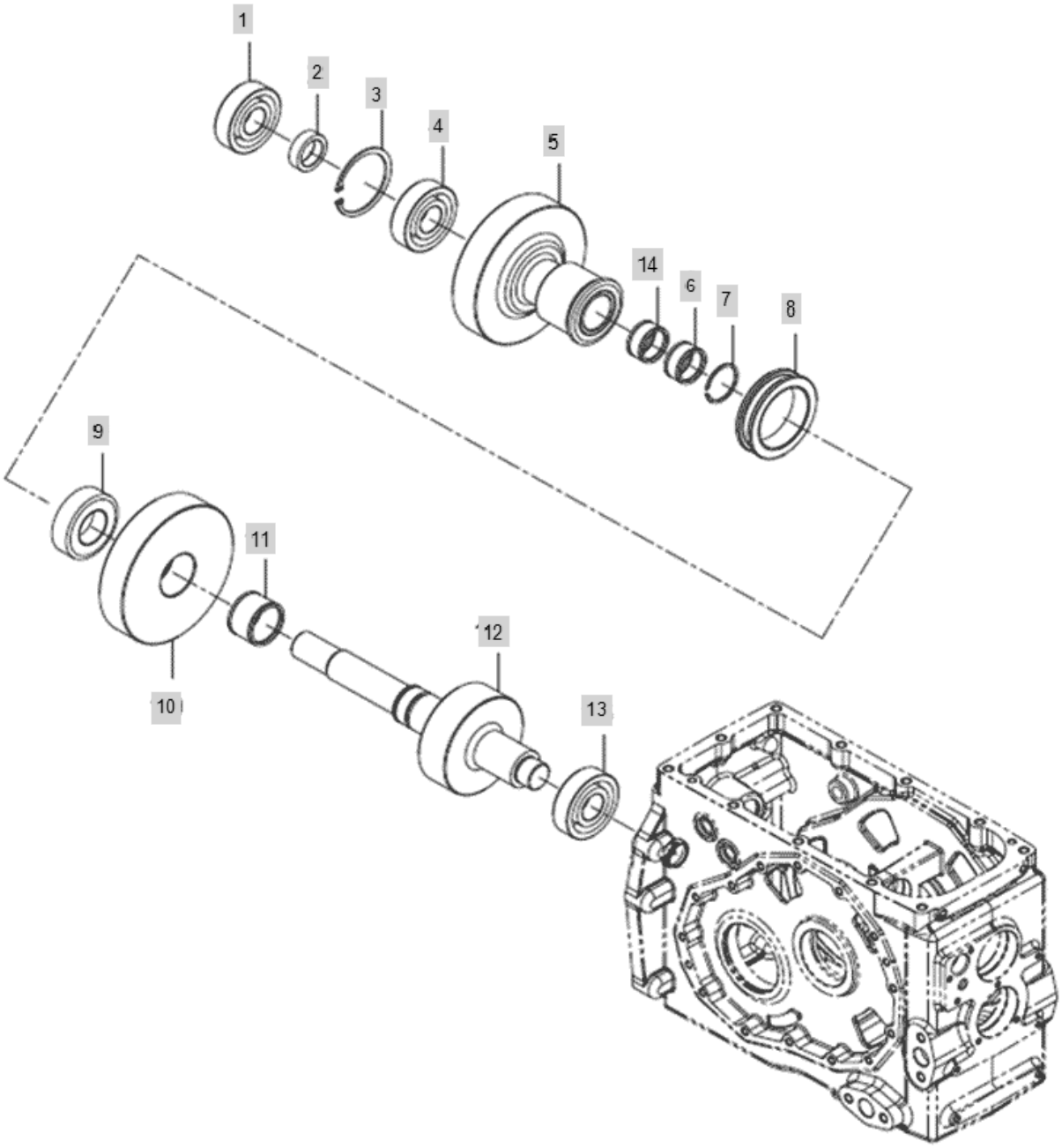

FIG T006-2 Branson 7845RP(US)	RANGE SHIFT DRIVE SHAFT(2019.04~)	Year/Month 2020/02

KeyNo.	Part Number	Part Name	Quantity	Other
1	CT85150000A4	Bearing #6305	2	
2	TA00033598A	SPACER(35X25X10)	1	
3	22252-000620	RING, CIRCLIP (Φ 62)	1	
4	24101-063054	BALL BEARING #6305	1	
5	TA00035153E	M GEAR, SUB SHIFT	1	
6	24161-283317	NEEDLE BEARING	2	
7	22242-000350	SNAP RING, SHAFT (Φ 35)	1	
8	TA00033597A	SHIFTER(M-C)	1	
9	TA00033596C	SPLINE COLLAR(M-C)	1	
10	TA00033600D	C GEAR, SUB SHIFT	1	
11	24161-354027	BEARING 354027	1	
12	TA00033595C	SHAFT, SUB SHIFT DRIVE	1	
13	TA00018445A	ROLLER BEARING NJ305E	1	
14	24161-283327	NEEDLEBEARING	1	

FIG T007 Branson 7845RP(US)	RANGE SHIFT DRIVEN SHAFT ASS`Y	Year/Month 2020/02

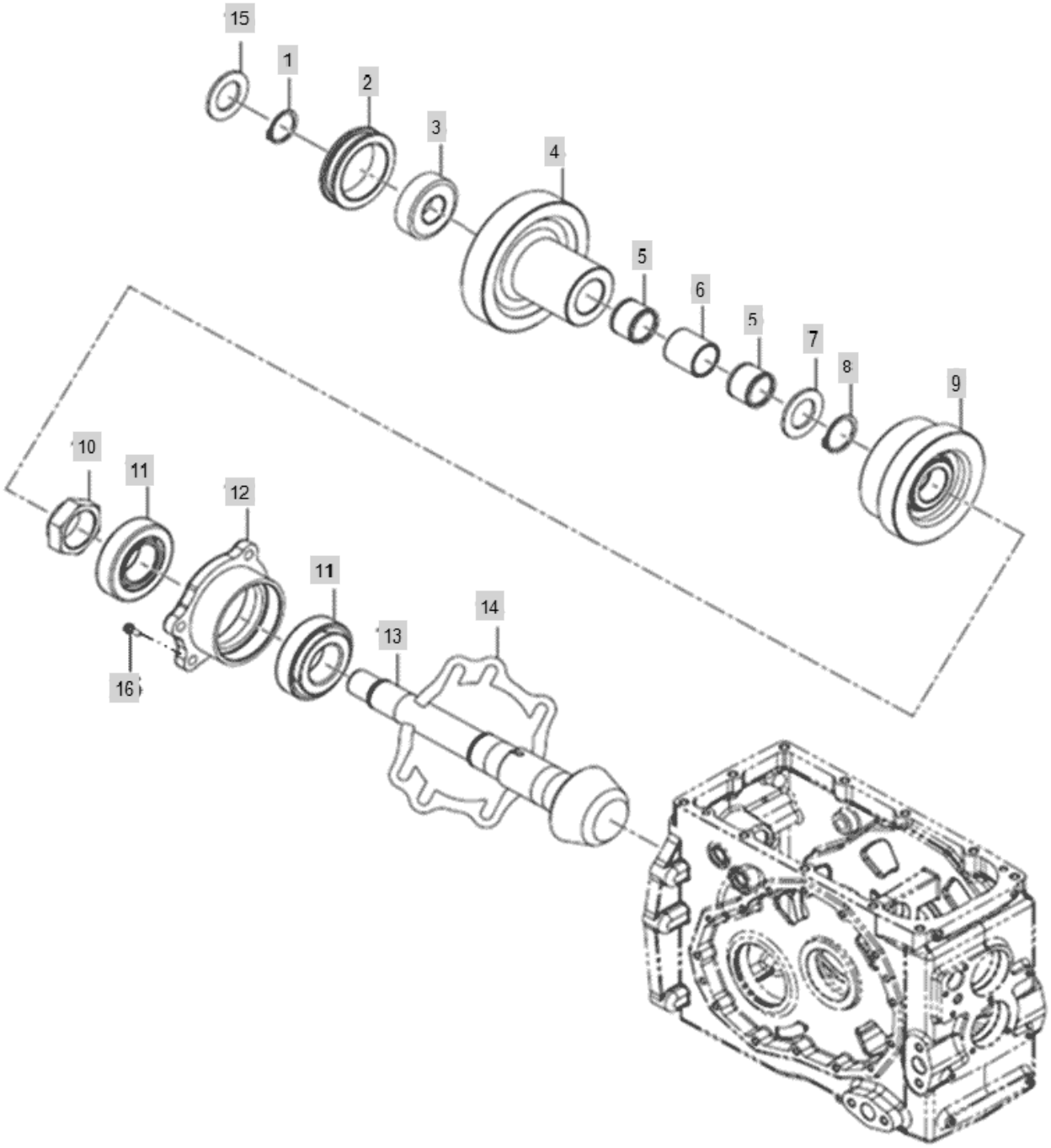

FIG T007 Branson 7845RP(US)	RANGE SHIFT DRIVEN SHAFT ASS`Y	Year/Month 2020/02

KeyNo.	Part Number	Part Name	Quantity	Other
1	22242-000300	SNAP RING, SHAFT (Φ 30)	1	
2	TA00033597A	SHIFTER(M-C)	1	
3	TA00033602D	SPLINE COLLAR(H-L)	1	
4	TA00033606D	L GEAR, SUB SHIFT	1	
5	24161-303527	BEARING,NEEDLE	2	
6	TA00033610A	BUSH(30X35X36.5)	1	
7	TA00033608B	SPACER(50X30X3)	1	
8	22242-000340	SNAP RING, SHAFT (Φ 34)	1	
9	TA00035156B	IDLE GEAR, SUB SHIFT	1	
10	TA00033604A	NUT, SUB SHIFT COUNTER	1	
11	24141-322080	TAPER ROLLER BEARING	2	
12	TA00033605B	RETAINER	1	
13	TA00033613D	COUNTER SHAFT	1	
14	TA00037747A	SHIM 0.1T	2	
15	TA00039006A	SPACER(SUB-SHIFT)	1	
16	26106-080302	HEX BOLT, FLANGE	4	

FIG T008 Branson 7845RP(US)	FRONT DRIVE CONNECTING SHAFT ASS`Y	Year/Month 2020/02

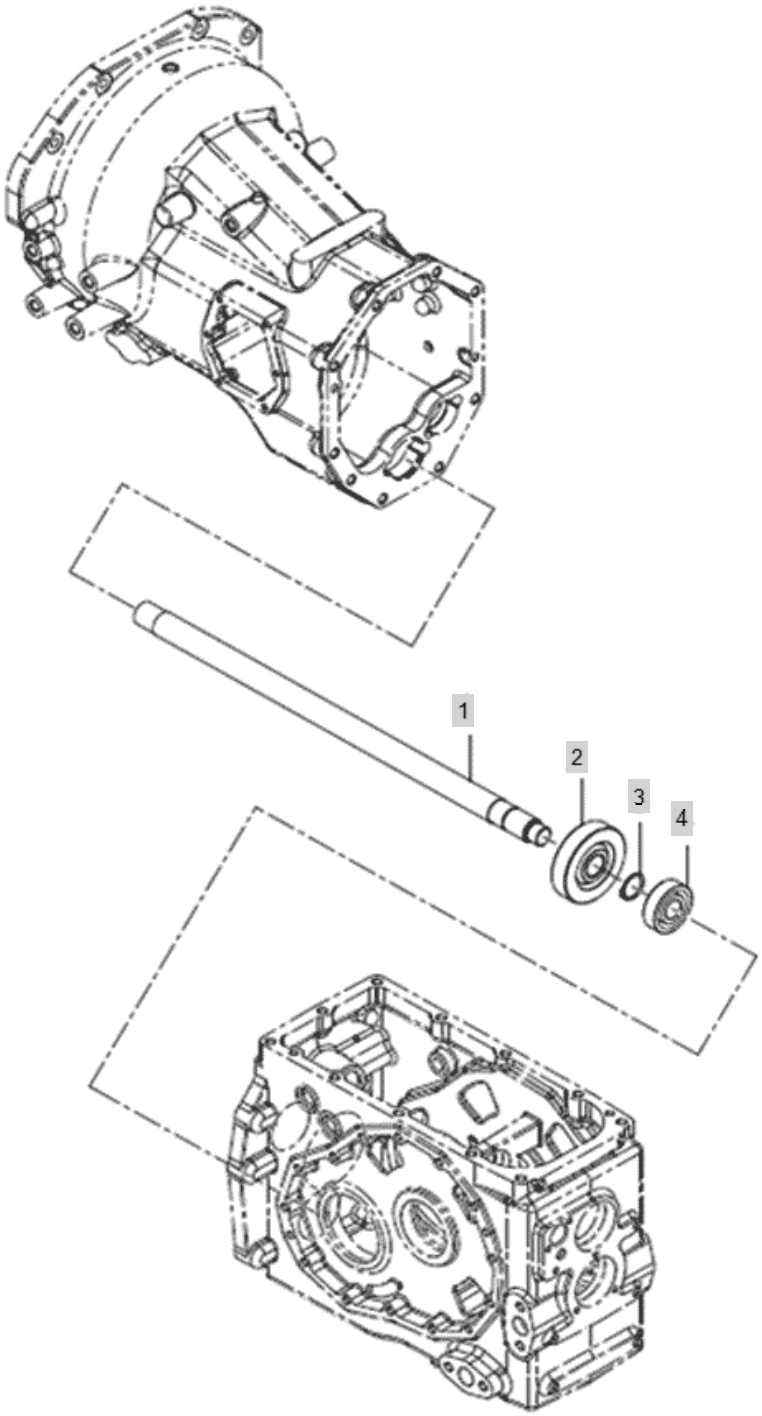

FIG T008 Branson 7845RP(US)	FRONT DRIVE CONNECTING SHAFT ASS`Y	Year/Month 2020/02

KeyNo.	Part Number	Part Name	Quantity	Other
1	TA00033642A	SHAFT, FRONT DRIVE CONNECTING	1	
2	TA00033643A	GEAR, FRONT DRIVE IDLE	1	
3	22242-000250	SNAP RING, SHAFT (Φ 25)	1	
4	CFC2090000A9	BALLBEARING6304R	1	

FIG T009 Branson 7845RP(US)	FRONT DRIVE SHAFT ASS`Y	Year/Month 2020/02

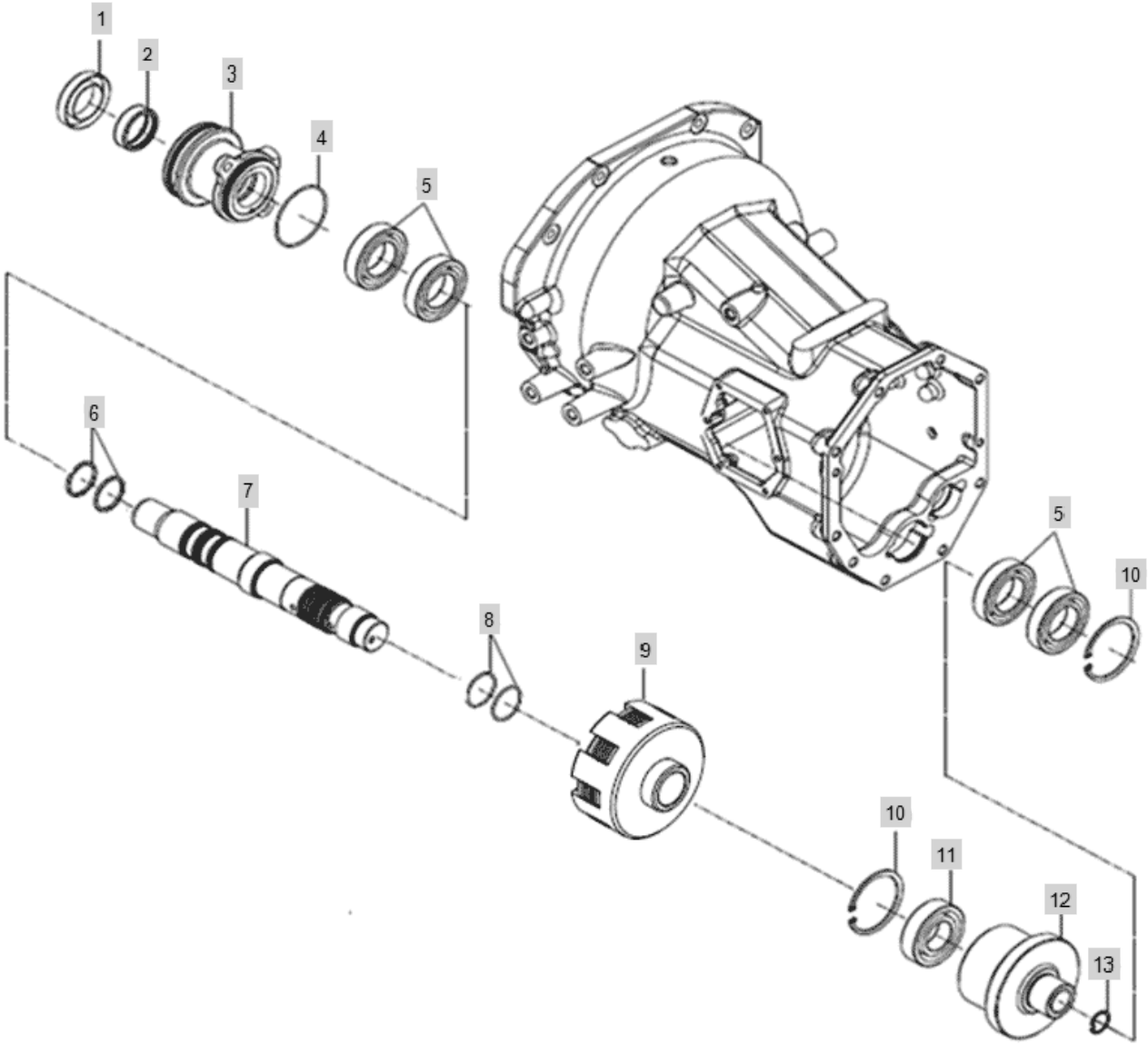

FIG T009 Branson 7845RP(US)	FRONT DRIVE SHAFT ASS`Y	Year/Month 2020/02

KeyNo.	Part Number	Part Name	Quantity	Other
1	24421-355511	OILSEAL TC355511	1	
2	24162-354212	NEEDLE BEARING	1	
3	TA00037632A	CASE, 4WD	1	
4	24341-000590	O RINGS	1	
5	24101-060074	Bearing, Ball (#6007)	4	
6	TA00033554A	SEALING(FR_INPUT)	2	
7	TA00037637C	SHAFT, 4WD	1	
8	24341-000320	O-RING, FIX (Φ32)	2	
9	TA00037790A	WET CLUTCH ASSY, 4WD	1	
10	22252-000620	RING, CIRCLIP (Φ 62)	2	
11	24101-062064	BALL BEARING (#6206)	1	
12	TA00033651B	GEAR, FRONT DRIVE CLUTCH	1	
13	22252-000220	RING, CIRCLIP (Φ 22)	1	

FIG T010 Branson 7845RP(US)	FRONT DRIVE IDLE SHAFT ASS`Y	Year/Month 2020/02

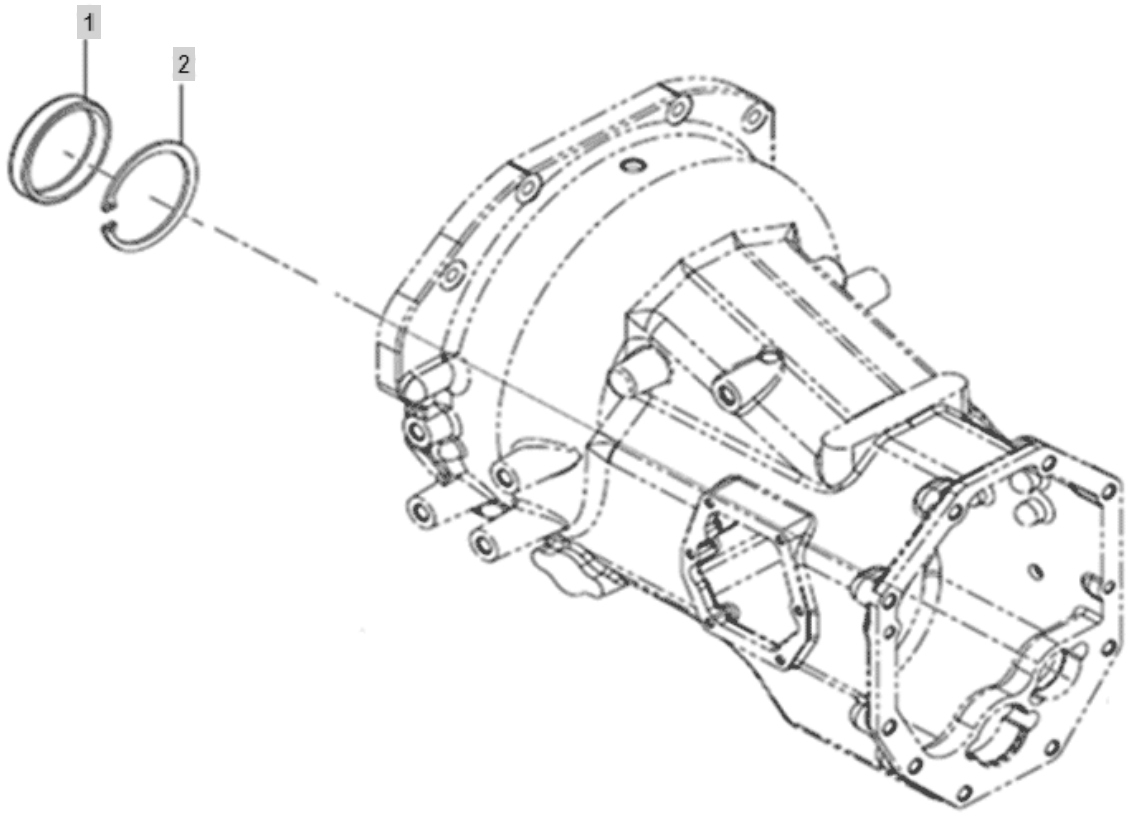

FIG T010 Branson 7845RP(US)	FRONT DRIVE IDLE SHAFT ASS`Y	Year/Month 2020/02

KeyNo.	Part Number	Part Name	Quantity	Other
1	27260-520000	SEALRING CAP	1	
2	22252-000520	RING, CIRCLIP (Φ 52)	1	

FIG T011 Branson 7845RP(US)	PTO CONNECTING SHAFT ASS`Y)	Year/Month 2020/02

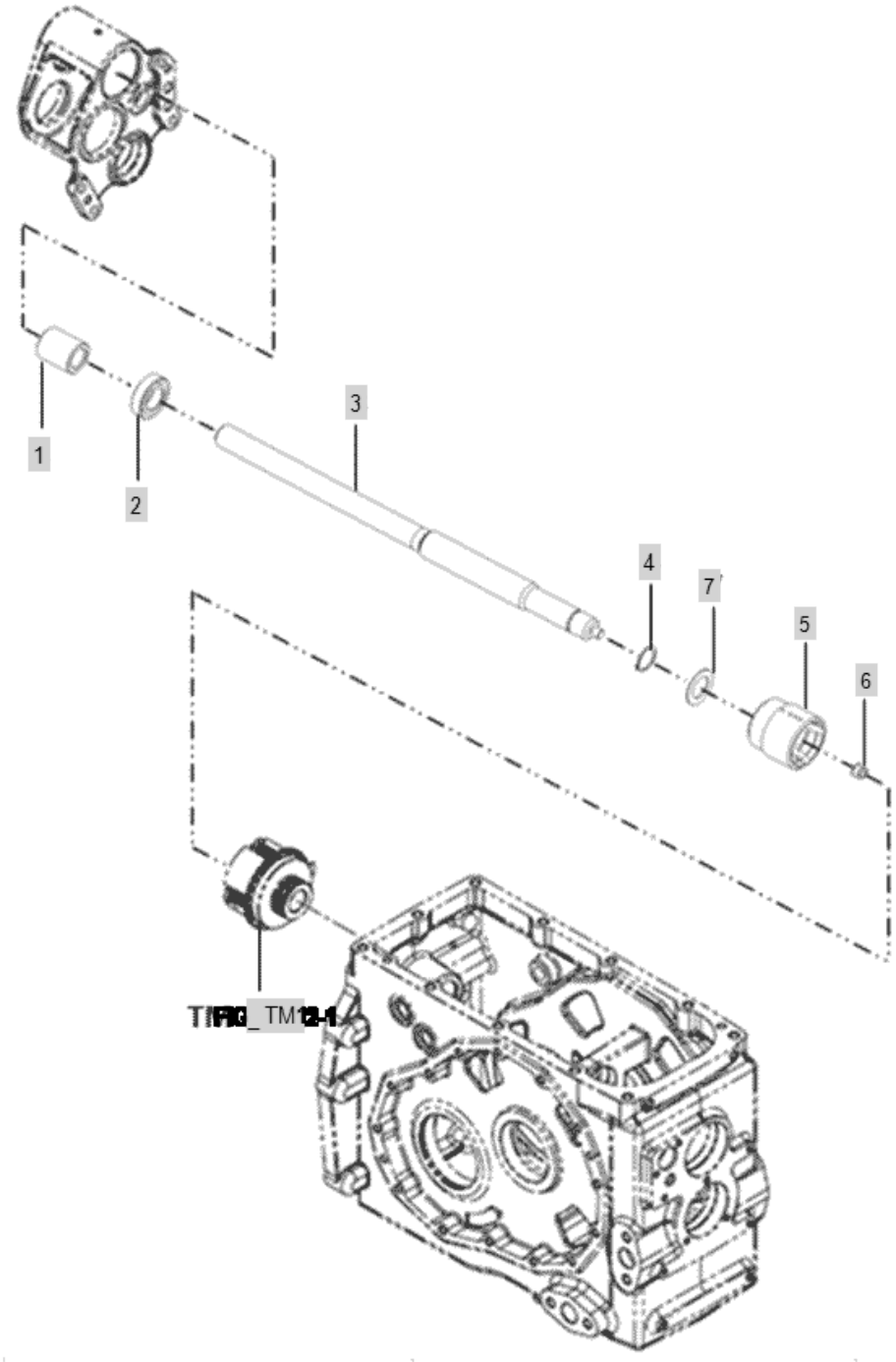

FIG T011 Branson 7845RP(US)	PTO CONNECTING SHAFT ASS`Y)	Year/Month 2020/02

KeyNo.	Part Number	Part Name	Quantity	Other
1	TA00002948A	PTO COUPLING	1	
2	24101-060054	BALL BEARING (#6005)	1	
3	TA00033615A	SHAFT, PTO CONNECTING	1	
4	22242-000250	SNAP RING, SHAFT (Φ 25)	1	
5	TA00033616B	HOLDER, PTO	1	
6	TA00034475A	NEEDLE BEARING	1	
7	TA00037983A	WASHER(40X27X1.8)	1	
FIG_TM12-1	TM012-1		1	

FIG T012 Branson 7845RP(US)	PTO CLUTCH SHAFT ASS`Y	Year/Month 2020/02

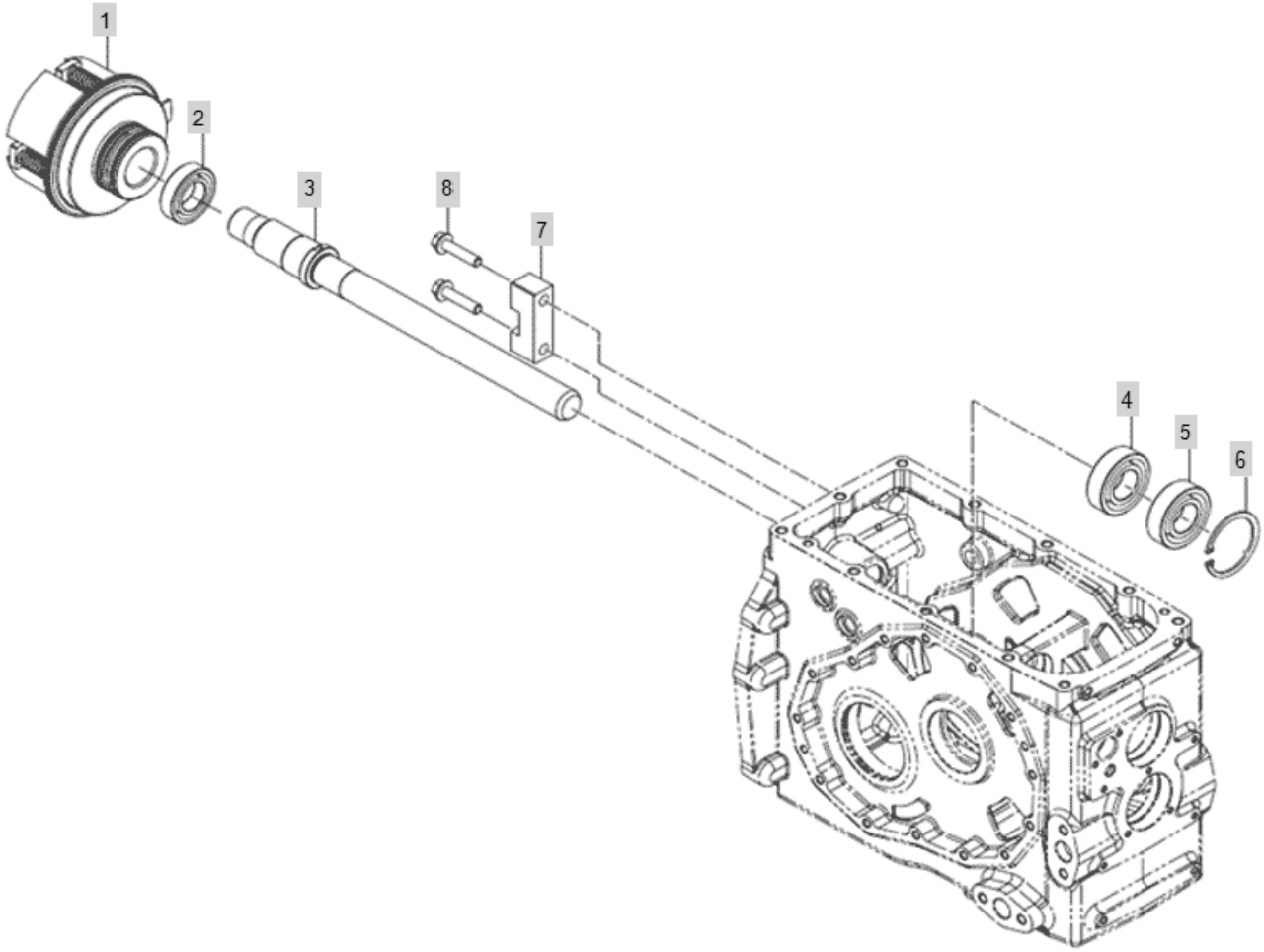

FIG T012 Branson 7845RP(US)	PTO CLUTCH SHAFT ASS`Y	Year/Month 2020/02

KeyNo.	Part Number	Part Name	Quantity	Other
1	TA00033620B	CLUTCH ASS'Y, PTO	1	
2	24101-060054	BALL BEARING (#6005)	1	
3	TA00033618B	SHAFT, PTO CLUTCH CONNECTING	1	
4	24101-062054	Bearing, Ball (#6205)	1	
5	24105-062054	BALL BEARING	1	
6	22252-000520	RING, CIRCLIP (Φ 52)	1	
7	TA00034702A	BREAK HOLDER	1	
8	26106-080352	SCREW,HEXFLANGEHEADCAP	2	

FIG T013 Branson 7845RP(US)	PTO DRIVE SHAFT ASS`Y	Year/Month 2020/02

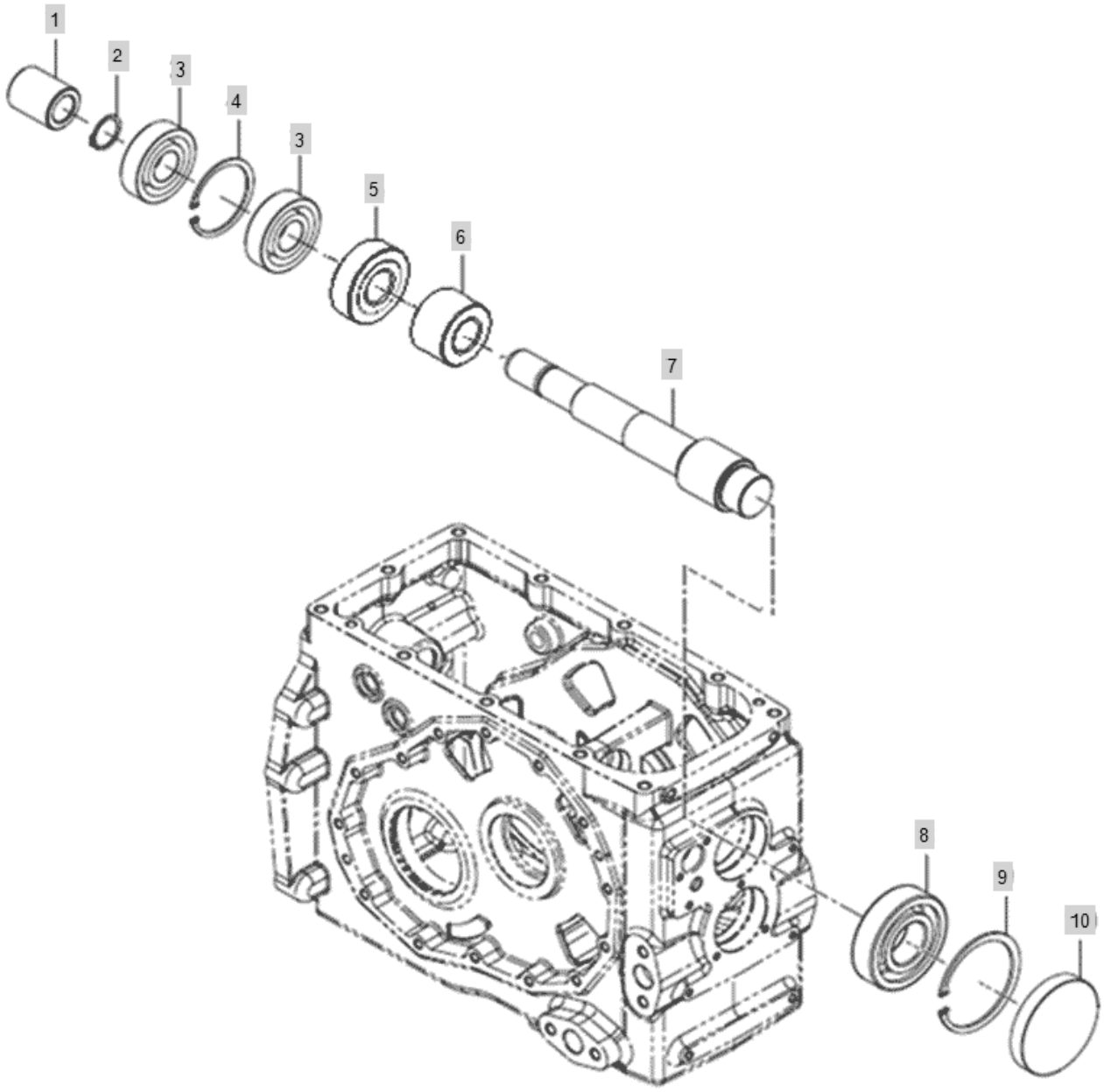

FIG T013 Branson 7845RP(US)	PTO DRIVE SHAFT ASS`Y	Year/Month 2020/02

KeyNo.	Part Number	Part Name	Quantity	Other
1	TA00002948A	PTO COUPLING	1	
2	22242-000250	SNAP RING, SHAFT (Φ 25)	1	
3	24101-063054	BALL BEARING #6305	2	
4	22252-000620	RING, CIRCLIP (Φ 62)	1	
5	TA00043514A	3RD GEAR, PTO DRIVE	1	
6	TA00043513A	2ND GEAR, PTO DRIVE	1	
7	TA00033622A	SHAFT, PTO DRIVE	1	
8	TCA6010000A3	BEARING	1	
9	22252-000800	RING, CIRCLIP (Φ 80)	1	
10	TA00033625A	SEALING CAP(80X74X10.2)	1	

FIG T014 Branson 7845RP(US)	PTO DRIVEN SHAFT ASS`Y	Year/Month 2020/02

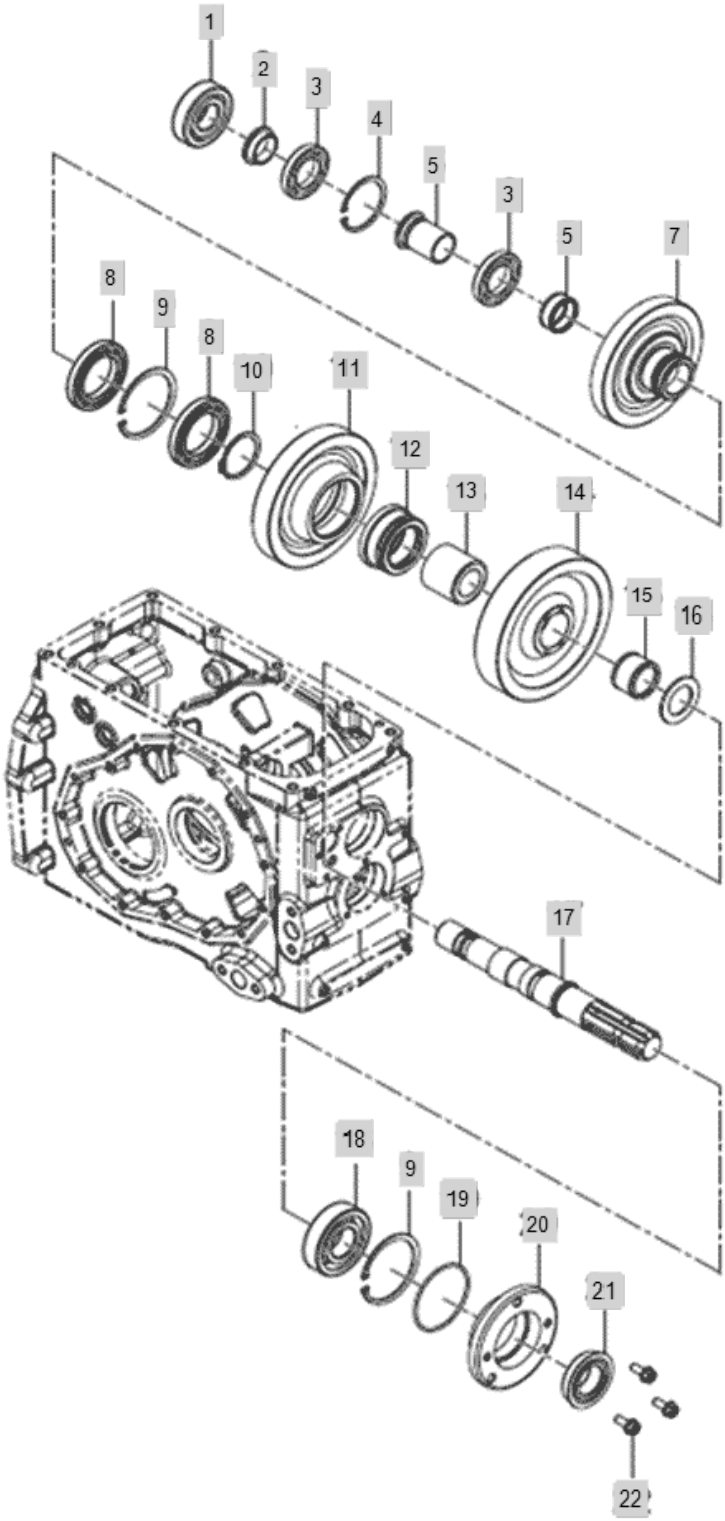

FIG T014 Branson 7845RP(US)	PTO DRIVEN SHAFT ASS`Y	Year/Month 2020/02

KeyNo.	Part Number	Part Name	Quantity	Other
1	TT52150000A4	BEARING	1	
2	TA00033628A	SPACER(SMALL)	1	
3	TA00033722A	BALL BEARING	2	
4	22252-000620	RING, CIRCLIP (Φ 62)	1	
5	TA00033629C	SPACER(LARGE)	1	
6	24161-354017	NEEDLE BEARING (35-40-17)	1	
7	TA00033630B	FIRST GEAR, PTO	1	
8	TT16130000A4	BEARING	2	
9	22252-000800	RING, CIRCLIP (Φ 80)	2	
10	22242-000500	SNAP RING, SHAFT (Φ50)	1	
11	TA00033631A	SECOND GEAR, PTO	1	
12	TA00033633B	SHIFTER, PTO	1	
13	TA00033634C	SPLINE COLLAR(PTO)	1	
14	TA00033632A	THIRD GEAR, PTO	1	
15	24161-354230	BEARING, NEEDLE (35-42-30)	1	
16	TA00033635A	SPACER(51X35X3)	1	
17	TA00033627B	SHAFT, PTO	1	
18	TCA6010000A3	BEARING	1	
19	24321-000750	SEAL,ORING	1	
20	TA00034401A	OIL SEAL COVER, PTO	1	
21	TT62040000A3	PTO OIL SEAL QLF35X60X19	1	
22	26106-080202	SQR FLANGE BOLT	3	

FIG T015 Branson 7845RP(US)	DIFFERENTIAL ASS`Y	Year/Month 2020/02

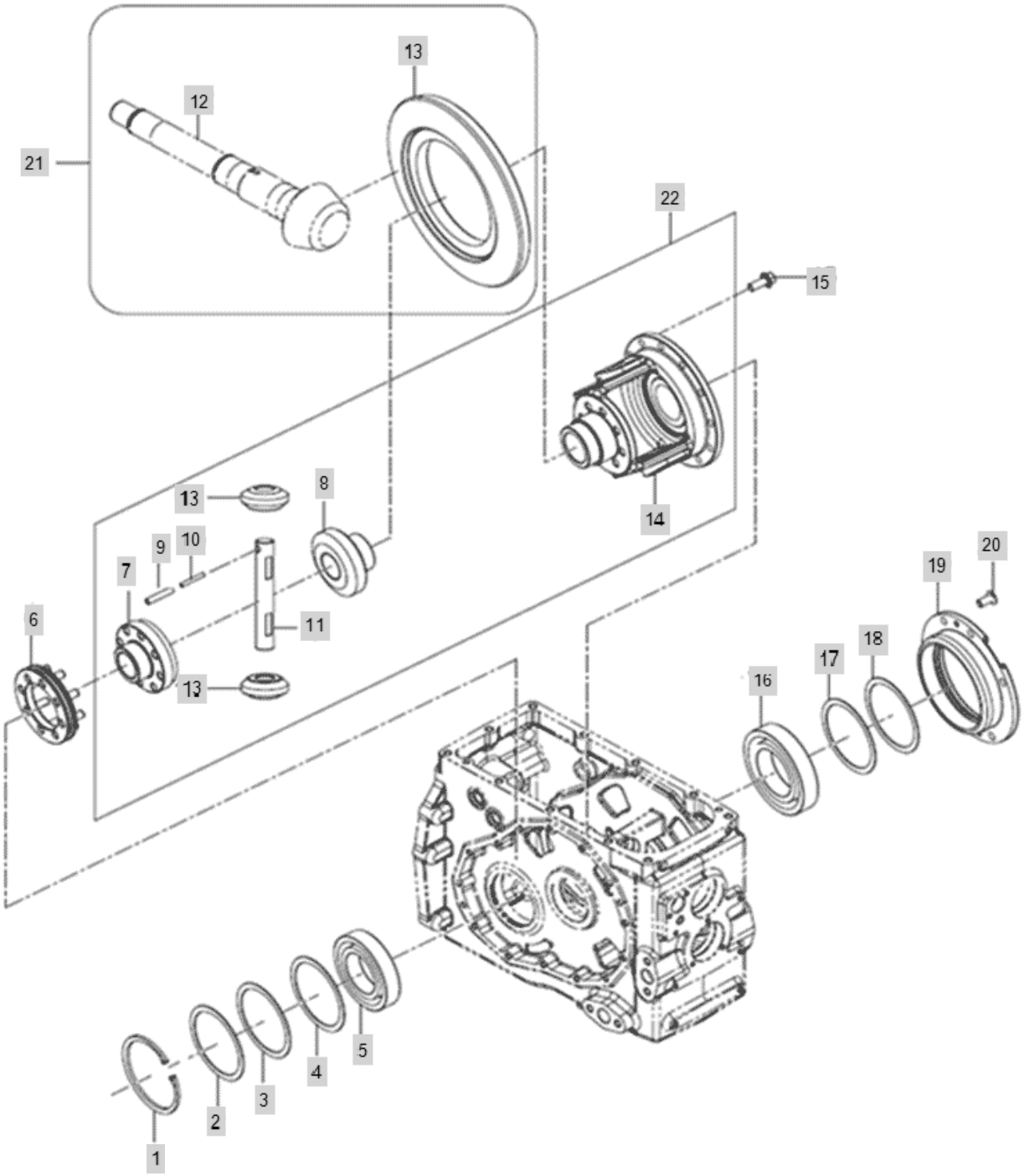

FIG T015 Branson 7845RP(US)	DIFFERENTIAL ASS`Y	Year/Month 2020/02

KeyNo.	Part Number	Part Name	Quantity	Other
1	22252-001100	RING, CIRCLIP (Φ110)	1	
2	TA00037093B	SHIM	2	
3	TA00037094B	SHIM	2	
4	TA00037095B	SHIM	2	
5	24101-062124	Bearing, Ball (#6212)	1	
6	TA00033664A	SLIDER, DIFFERENTIAL LOCK	1	
7	TA00034092A	SIDE GEAR(L), DIFF	1	
8	TA00034093A	SIDE GEAR(R), DIFF	1	
9	22351-080040	PIN, SPRING (8-40)	1	
10	22351-050036	`	1	
11	TA00034099A	PINION SHAFT, DIFF	1	
12	TA00034094A	PINION GEAR, DIFF	2	
13	TA00033612A	GEAR, RING	1	
14	TA00056400B	CASE, DIFF.	1	
14-1	TA00033663A	DIFFERENTIAL CASE	1	deleted
15	TA00058708A	REAMER BOLT (M10X1.25)	12	
15-1	TF64090000A4	BOLT	12	deleted
16	24101-062144	BEARING	1	
17	TA00037734A	SHIM 0.1T(R)	1	
18	TA00037733A	SHIM 0.2T(R)	2	
19	TA00036679B	CARRER, DIFFERENTIAL	1	
20	26106-100202	HEX BOLT, (10-20)	6	
21	TA00033611A	GEAR ASS'Y, RING	1	
22	TA00036759A	DIFFERENTIAL ASSY	1	

FIG T016 Branson 7845RP(US)	REAR AXLE HOUSING ASS`Y	Year/Month 2020/02

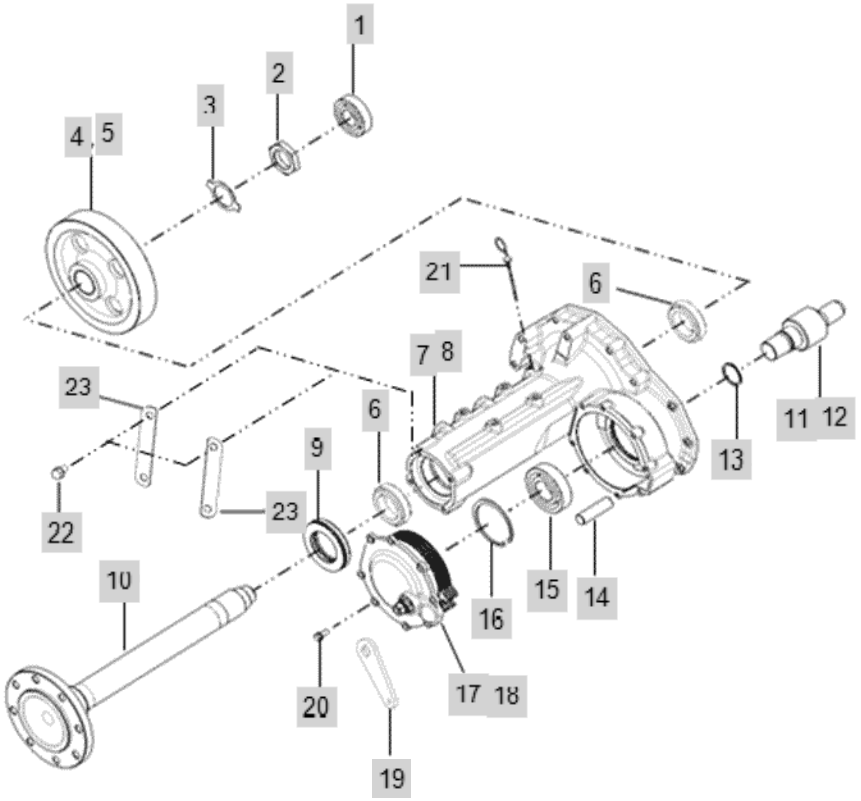

FIG T016 Branson 7845RP(US)	REAR AXLE HOUSING ASS`Y	Year/Month 2020/02

KeyNo.	Part Number	Part Name	Quantity	Other
1	24101-063084	BALL BEARING #6308	2	
2	TA00033674A	STOP NUT	2	
3	TA00033671A	PLATE, SPACER	2	
4	TA00033673A	GEAR, REAR AXLE (LH)	1	
5	TA00033682A	GEAR, REAR AXLE (RH)	1	
6	24142-320120	ROLLER BEARING, TAPER #320120	4	
7	TA00036161D	REAR HOUSING(L)	1	
8	TA00033669D	CASE, REAR AXLE	1	
9	TA00029941A	OIL SEAL(REAR AXLE)	2	
10	TA00033672A	SHAFT, REAR AXLE	2	
11	TA00033675A	FINAL PINION (LH)	1	
12	TA00033683A	FINAL PINION (RH)	1	
13	22242-000500	SNAP RING, SHAFT (Φ50)	2	
14	TA00035228A	SHAFT	2	
15	24101-063104	BALL BEARING #6310	2	
16	22252-001100	RING, CIRCLIP (Φ110)	2	
17	TA00035398C	BRAKE ASS'Y(LH)	1	
18	TA00035399C	BRAKE ASS'Y(RH)	1	
19	TA00037378A	LEVER_BRAKE	2	
20	26013-100252	SCREW,CAPTIVEWASHERCAP	16	
21	TA00037113A	DIP STICK	1	
22	26013-100202	BOLT(+SW)	8	
23	TA00038008A	PLATE	4	

FIG T017 Branson 7845RP(US)	HYDRAULIC CYLINDER CASE ASS`Y -AP	Year/Month 2020/02

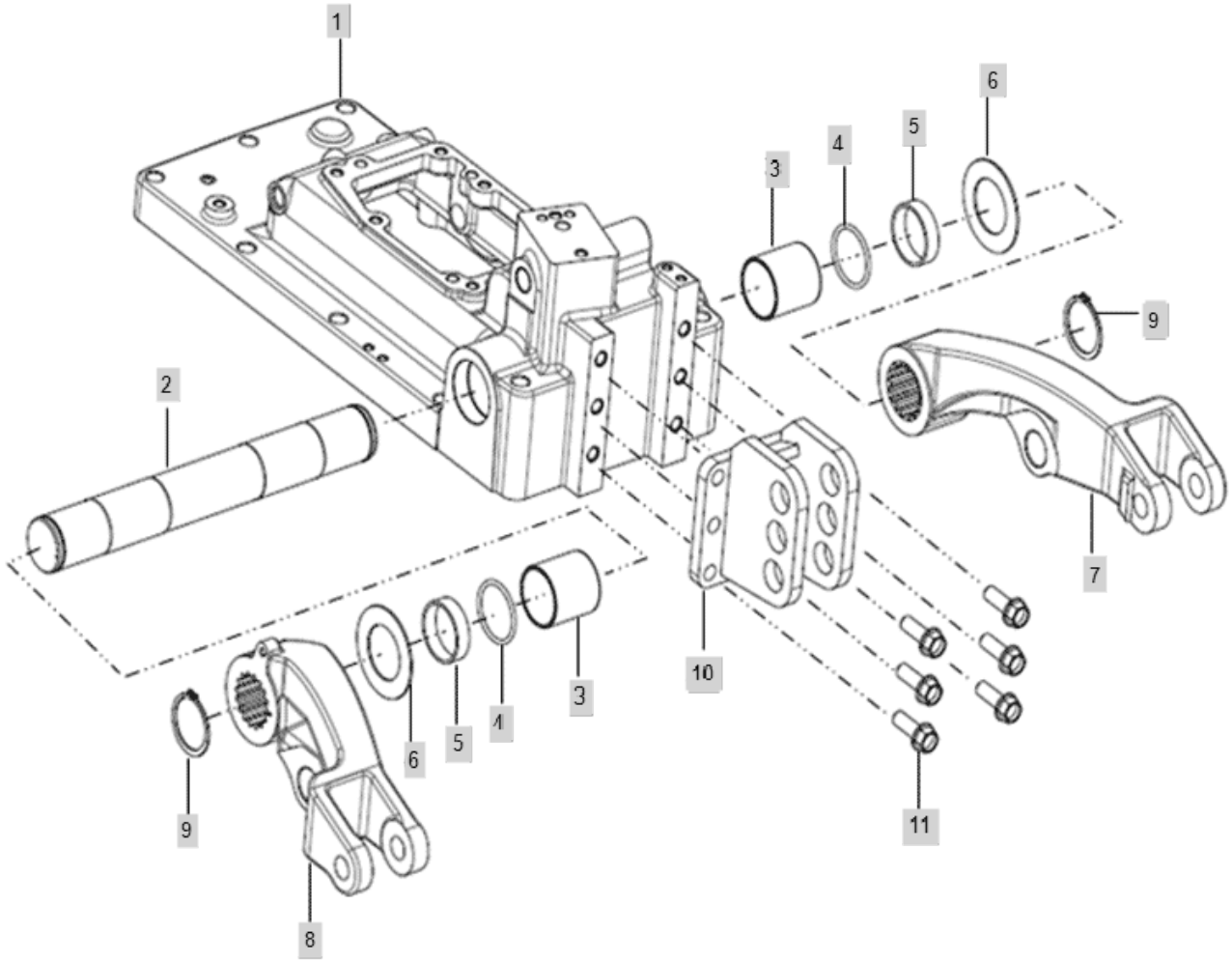

FIG T017 Branson 7845RP(US)	HYDRAULIC CYLINDER CASE ASS`Y -AP	Year/Month 2020/02

KeyNo.	Part Number	Part Name	Quantity	Other
1	TA00039096A	HYD CYLINDER CASE, MECHANICAL	1	
2	TA00039747A	LIFT ARM SHAFT	1	
3	24550-045500	DRY BUSH	2	
4	24311-000450	O-RING, DYNAMIC (Φ45)	2	
5	TA00035171A	SPACER(50X45X13)	2	
6	TA00035170A	THRUST COLLAR	2	
7	TA00027859A	LIFT ARM(RH)	1	
8	TA00027858A	LIFT ARM(LH)	1	
9	22242-000450	SNAP RING, SHAFT (Φ 45)	2	
10	TA00041302A	BRACKET ASS'Y. TOP LINK	1	
11	26013-120352	SCREW,CAPTIVEWASHERCAP	6	

FIG T018 Branson 7845RP(US)	MAIN SHIFT CASE ASS`Y	Year/Month 2020/02

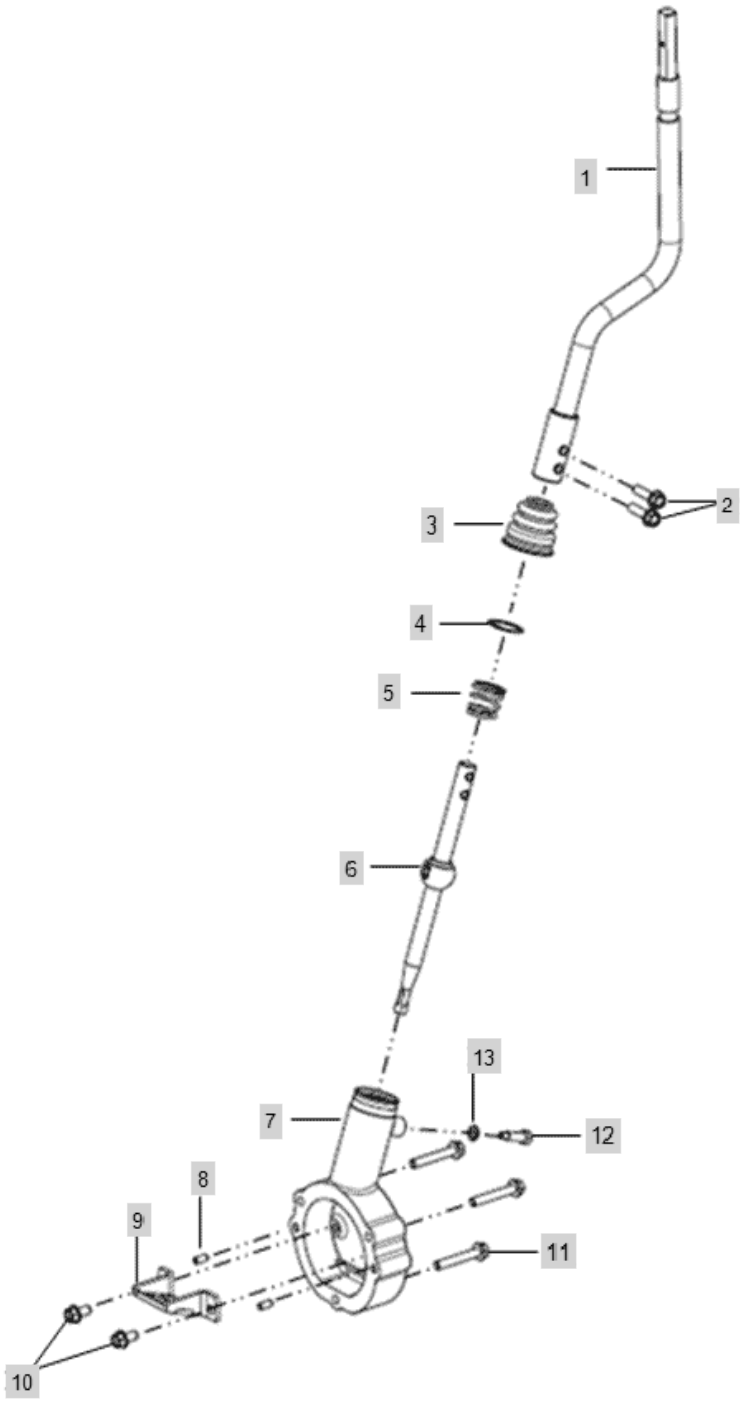

FIG T018 Branson 7845RP(US)	MAIN SHIFT CASE ASS`Y	Year/Month 2020/02

KeyNo.	Part Number	Part Name	Quantity	Other
1	TA00040325B	LEVER, MAIN SHIFT	1	
2	26106-080302	HEX BOLT, FLANGE	2	
3	TA00033698A	BOOT	1	
4	22252-000320	RING, CIRCLIP (Φ 32)	1	
5	TA00035672A	COIL SPRING	1	
6	TA00038445A	SUB-SHIFT LEVER(LOWER) ASSY	1	
7	TA00033692A	CASE, MAIN SHIFT	1	
8	22312-060120	PIN, DOWEL (6-12)	2	
9	TA00036900A	GUIDE, MAIN-SHIFT	1	
10	26106-080162	SCREW,HEXFLANGEHEADCAP	2	
11	26106-080052		3	
12	TA00036948A	BOLT	1	
13	23414-080000	WASHER, PLAIN (Φ8)	1	

FIG T019 Branson 7845RP(US)	RANGE SHIFT CASE ASS`Y	Year/Month 2020/02

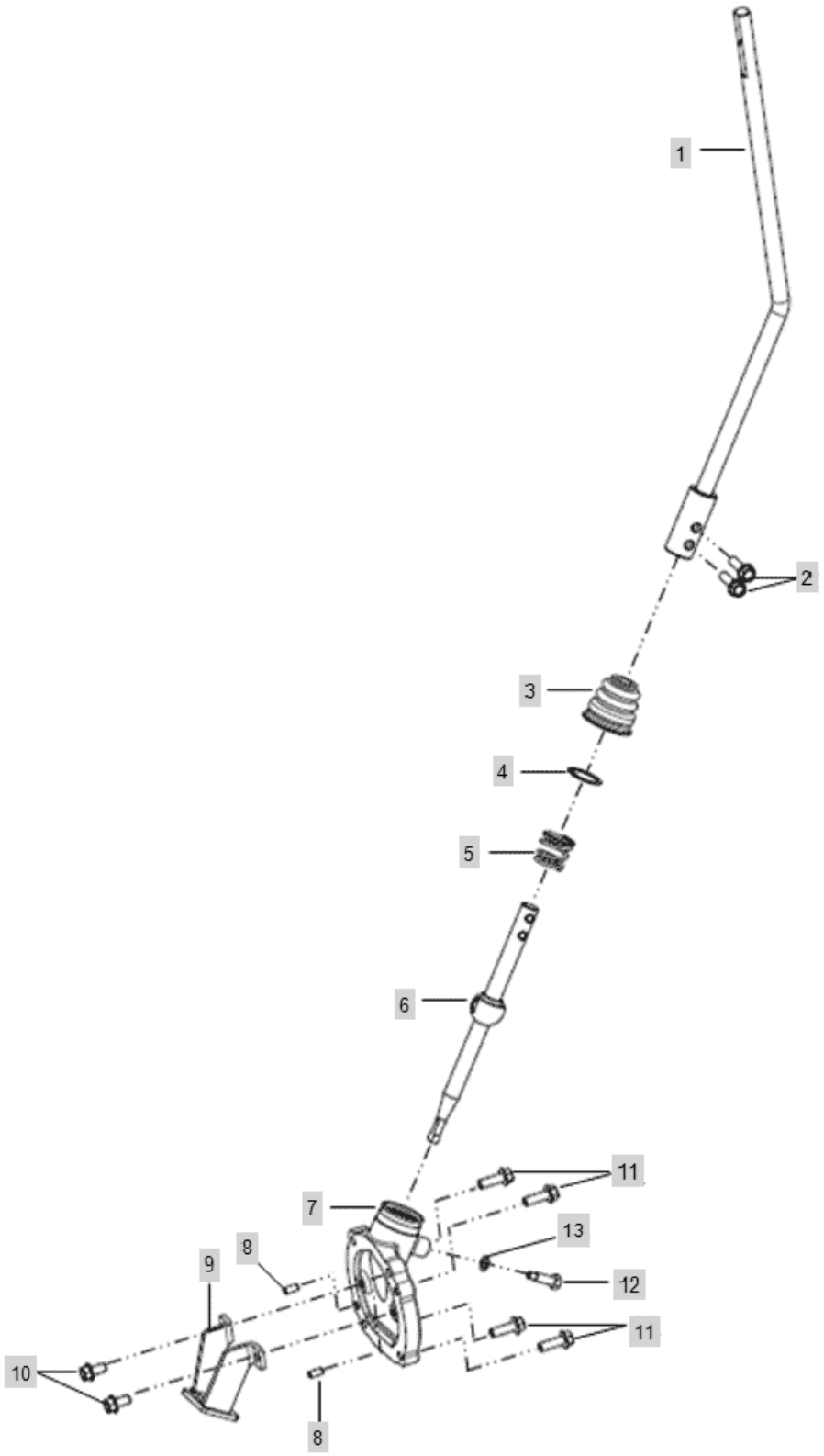

FIG T019 Branson 7845RP(US)	RANGE SHIFT CASE ASS`Y	Year/Month 2020/02

KeyNo.	Part Number	Part Name	Quantity	Other
1	TA00040327A	LEVER, SUB-SHIFT	1	
2	26106-080302	HEX BOLT, FLANGE	2	
3	TA00033698A	BOOT	1	
4	22252-000320	RING, CIRCLIP (Φ 32)	1	
5	TA00035672A	COIL SPRING	1	
6	TA00038445A	SUB-SHIFT LEVER(LOWER) ASSY	1	
7	TA00033705A	CASE, SUB SHIFT	1	
8	22312-060120	PIN, DOWEL (6-12)	2	
9	TA00036904A	GUIDE, SUB-SHIFT	1	
10	26106-080162	SCREW,HEXFLANGEHEADCAP	2	
11	26106-080252	SCREW,HEXFLANGEHEADCAP	4	
12	TA00036948A	BOLT	1	
13	23414-080000	WASHER, PLAIN (Φ8)	1	

FIG T020 Branson 7845RP(US)	HYDRAULIC CYLINDER ASS`Y	Year/Month 2020/02

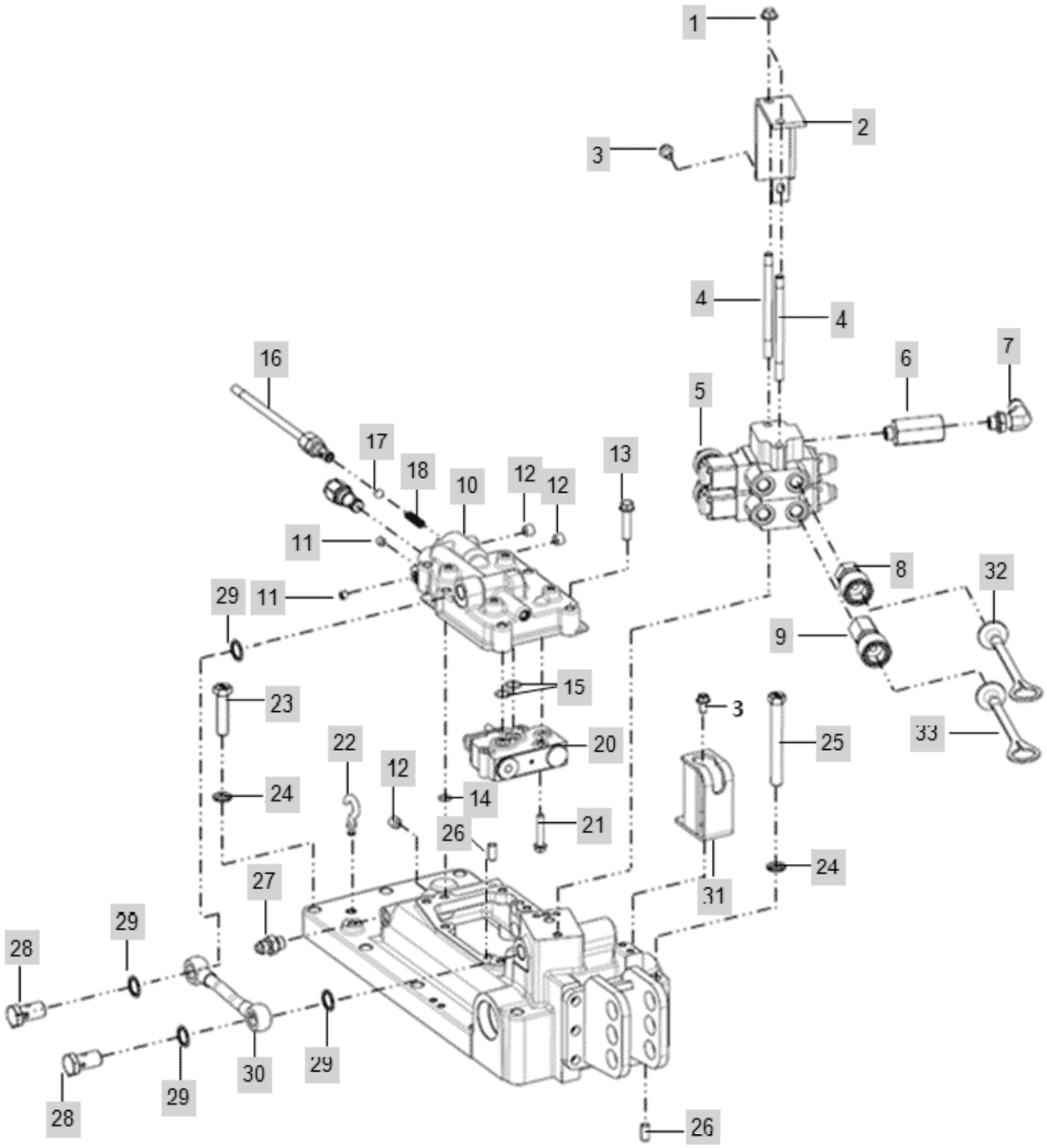

FIG T020 Branson 7845RP(US)	HYDRAULIC CYLINDER ASS`Y	Year/Month 2020/02

KeyNo.	Part Number	Part Name	Quantity	Other
1	26367-100002	NUT,HEXAGONFLANGE	2	
2	TA00041273C	SCV CABLE BRACKET	1	
3	26106-080162	SCREW,HEXFLANGEHEADCAP	3	
4	TA00034089A	BOLT	2	
5	TA00041211B	SCV ASSY, 4 PORT	1	
6	TA00038267A	STRAINER	1	
7	TA00035078A	ELBOW	1	
8	TA00043300A	QUICK COUPLUNG(1/2")	2	
9	TA00045252A	QUICK COUPLUNG(1/2")	2	
10	TA00033096G	COVER, HYD CYLINDER	1	
11	23871-010000	PLUG	3	
12	23871-020000	Plug, Pipe	4	
13	26013-100452	HEX BOLT W/WASHER	6	
14	24311-000120	O-RING, DYNAMIC (Φ12)	1	
15	24315-000160	O-RING	2	
16	TA00036227B	STOP V/V(PTO3)	1	
17	24190-140001	STEEL BALL	1	
18	TA00034091B	SPRING, LOCKING VALVE	1	
19	TA00036187A	SAFETY VALVE	1	
20	TA00033098B	VALVE, CONTROL	1	
21	26013-080452	SCREW,CAPTIVEWASHERCAP	3	
22	TA00019614A	CAP	1	
23	FT08220000A4	BOLT	9	
24	22217-140000	WASHER, SPRING (Φ 14)	11	
25	TA00036681A	BOLT(M14XP2X120)	2	
26	22312-100200	PIN, DOWEL (10-20)	4	
27	TTA3880000A4	Adapt, Connect PF3/8	2	
28	TTB4180000A4	BOLT	2	
29	TA00036405A	BONDED SEAL	4	
30	TA00040831A	CYLINDER PIPE	1	
31	TA00037243B	HOLDER ASS'Y, TOP LINK	1	
32	TA00032978C	JOINT CAP	2	
33	TA00032980C	JOINT CAP	2	

FIG T021 Branson 7845RP(US)	MAIN SHIFT RELATION	Year/Month 2020/02

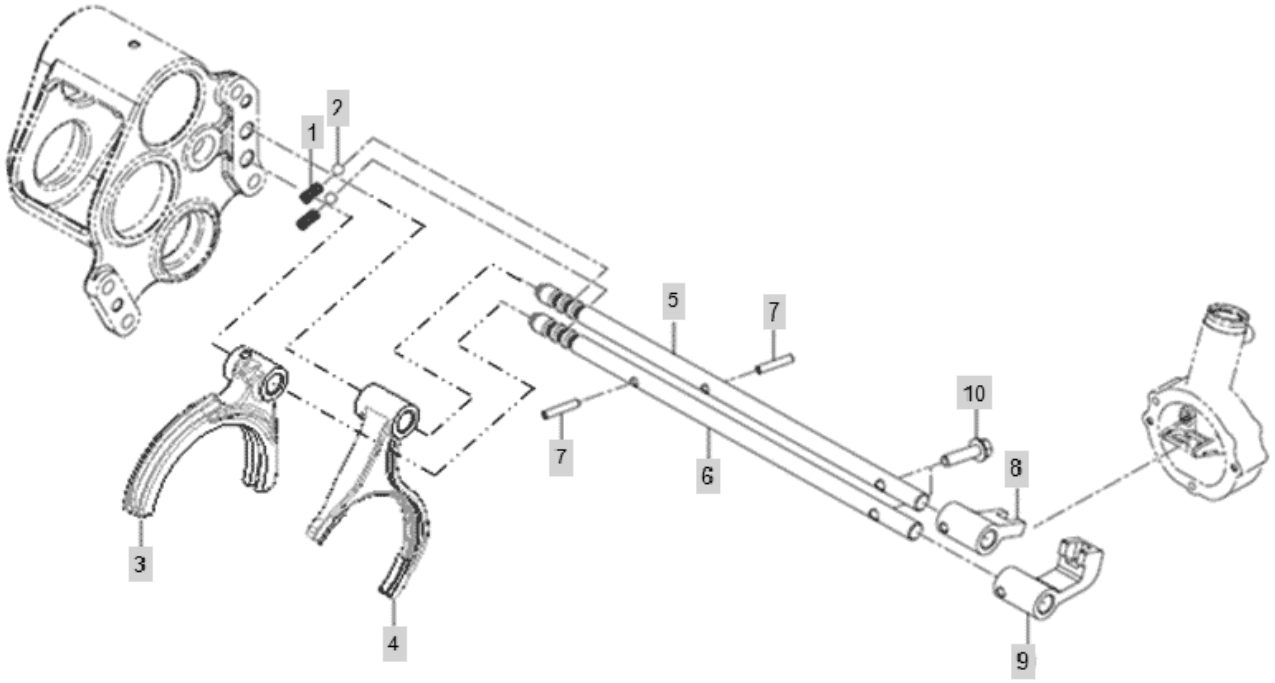

FIG T021 Branson 7845RP(US)	MAIN SHIFT RELATION	Year/Month 2020/02

KeyNo.	Part Number	Part Name	Quantity	Other
1	TA00035216A	SPRING, SHIFTER	2	
2	24190-100001	Ball, Steel (5/16)	2	
3	TA00039633A	FORK, GEAR_DRIVEN_2ST	1	
4	TA00033686B	MAIN SHIFT FORK (3-4)	1	
5	TA00033689A	SHAFT, MAIN SHIFT FORK (1-2)	1	
6	TA00033690A	SHAFT, MAIN SHIFT FORK (3-4)	1	
7	22351-060025	PIN, SPRING (6-25)	2	
8	TA00033687A	MAIN SHIFT LINK (1-2)	1	
9	TA00033688A	MAIN SHIFT LINK (3-4)	1	
10	26106-080302	HEX BOLT, FLANGE	2	

FIG T022 Branson 7845RP(US)	RANGE SHIFT RELATION	Year/Month 2020/02

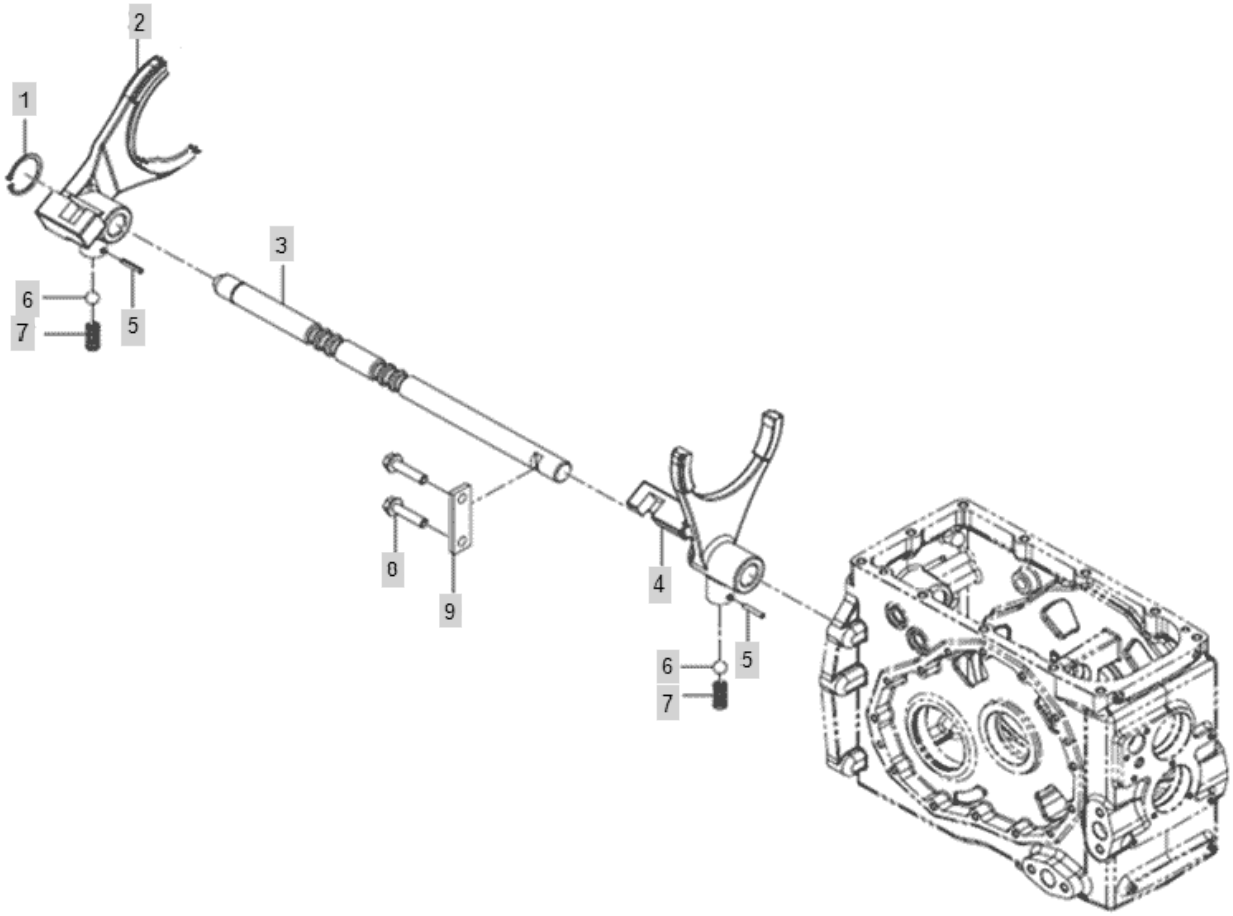

FIG T022 Branson 7845RP(US)	RANGE SHIFT RELATION	Year/Month 2020/02

KeyNo.	Part Number	Part Name	Quantity	Other
1	22242-000140	SNAP RING, SHAFT (Φ 14)	1	
2	TA00033702C	SUB SHIFT FORK (L-H)	1	
3	TA00033703B	SHAFT, SUB SHIFT	1	
4	TA00033701C	SUB SHIFT FORK (C-M)	1	
5	22351-025016		2	
6	24190-100001	Ball, Steel (5/16)	2	
7	TA00035216A	SPRING, SHIFTER	2	
8	26106-080162	SCREW,HEXFLANGEHEADCAP	2	
9	TA00037522A	BRACKET(SUB-SHIFT)	1	

FIG T023 Branson 7845RP(US)	DIFFERENTIAL SHIFT ASS`Y	Year/Month 2020/02

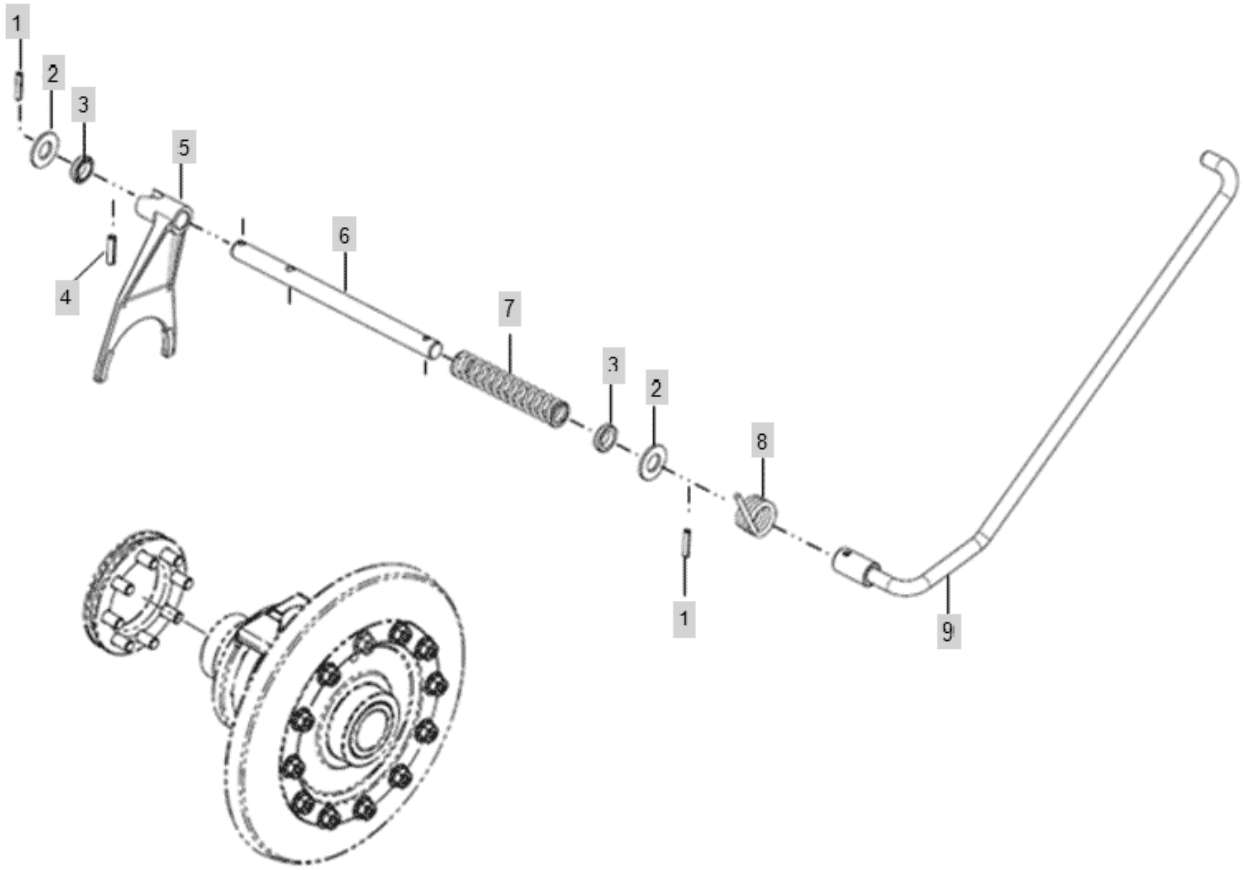

FIG T023 Branson 7845RP(US)	DIFFERENTIAL SHIFT ASS`Y	Year/Month 2020/02

KeyNo.	Part Number	Part Name	Quantity	Other
1	22351-060032	PIN, SPRING (6-32)	2	
2	TT69090000B4	COLLAR	2	
3	24421-203007	OIL SEAL	2	
4	22351-080032	PIN, SPRING (8-32)	1	
5	TA00033712C	FORK, DIFFERENTIAL	1	
6	TA00033716A	SHAFT, DIFFERENTIAL	1	
7	TT83050000A4	RETURN SPRING	1	
8	TA00037028A	SPRING(DIFF.)	1	
9	TA00040331B	PEDAL, DIFFERENTIAL	1	

FIG T024 Branson 7845RP(US)	PTO SHIFT LEVER)	Year/Month 2020/02

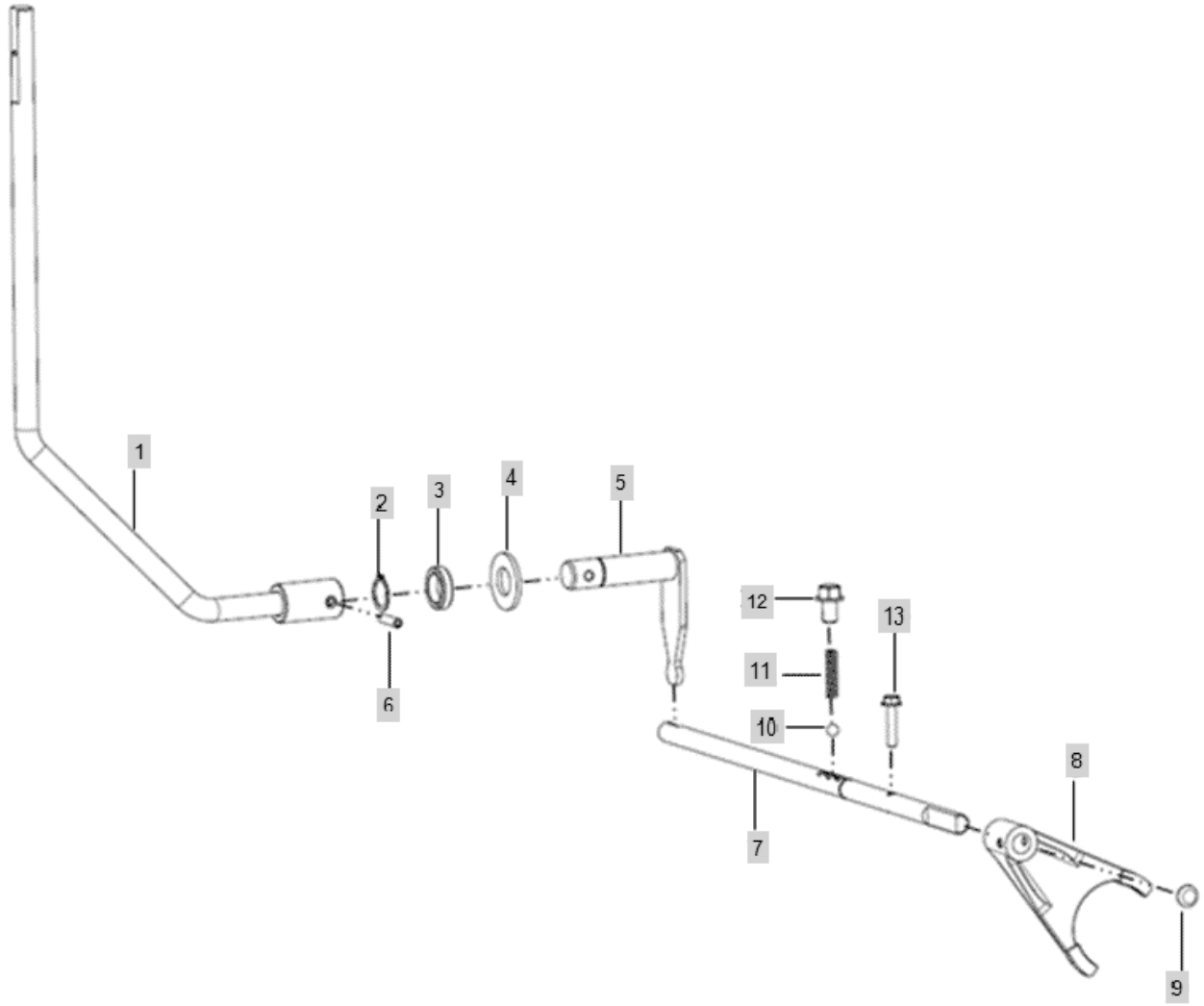

FIG T024 Branson 7845RP(US)	PTO SHIFT LEVER)	Year/Month 2020/02

KeyNo.	Part Number	Part Name	Quantity	Other
1	TA00040329A	LEVER, PTO	1	
2	22242-000200	SNAP RING, SHAFT (Φ 20)	1	
3	TT69090000B4	COLLAR	1	
4	24421-203007	OIL SEAL	1	
5	TA00033967A	ARM, PTO	1	
6	22351-060025	PIN, SPRING (6-25)	1	
7	TA00033719B	SHAFT, PTO DIFFERENTIAL	1	
8	TA00033717B	PORK, PTO	1	
9	27260-150000	Cap, Seal (d=15mm)	1	
10	24190-100001	Ball, Steel (5/16)	1	
11	TT42020000A4	SPRING	1	
12	26136-100162	HEX PLANGE BOLT	1	
13	26106-060302	Bolt, Hexa (6-30)	1	

FIG T025 Branson 7845RP(US)	CASE ASS'Y	Year/Month 2020/02

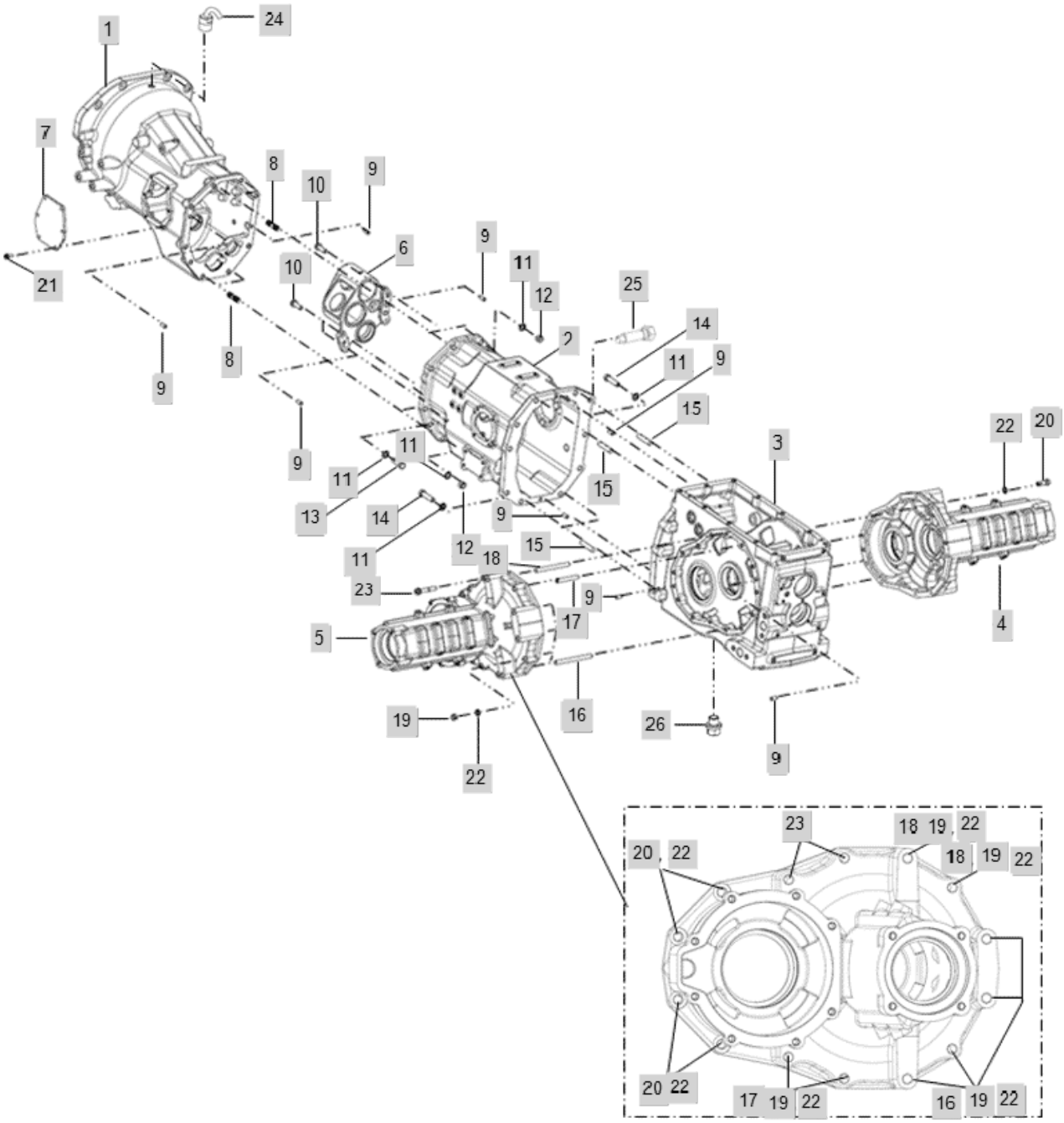

FIG T025 Branson 7845RP(US)	CASE ASS'Y	Year/Month 2020/02

KeyNo.	Part Number	Part Name	Quantity	Other
1	TA00033658C	CLUTCH HOUSING	1	
2	TA00040913B	TRANSMISSION CASE(ROPS)	1	
3	TA00033660F	REAR AXLE CASE	1	
4	TA00033669C	CASE, REAR AXLE	1	
5	TA00036161C	REAR HOUSING(L)	1	
6	TA00033661A	CENTER PLATE	1	
7	TA00036134A	COVER	1	
8	FB80120000A4	STUD BOLT(M14X38)	4	
9	22312-100200	PIN, DOWEL (10-20)	10	
10	26106-120352	screw	4	
11	22217-140000	WASHER, SPRING (Φ 14)	19	
12	FB36100000A4	HEXAGON NUT	8	
13	FT08110000A4	BOLT(M14X42)	5	
14	FT08130000A4	BOLT	6	
15	TA00037012A	STUD BOLT(M14XP2X45)	4	
16	TA00037850B	STUD BOLT	8	
17	TA00037013A	STUD BOLT(M12XP1.75X70)	6	
18	FT36080000A4	Stud Bolt(12X120)	2	
19	FT36100000A4	HEXAGON NUT	16	
20	TH22090000A4	BOLT (M12 P1.75X35)	8	
21	26106-080202	SQR FLANGE BOLT	6	
22	22217-120000	WASHER, SPRING (Φ 12)	22	
23	FGG6090000B	HEXAGON BOLT AND WASHER ASSEMBLIES	4	
24	TA00041726A	PIPE	1	
25	HA00000834C	LUXEN5 SPEED SENSOR	1	
26	TB28120000C4	DRAIN PLUG	1	

FIG T026 Branson 7845RP(US)	HYDRAULIC ASS`Y RELATION	Year/Month 2020/02

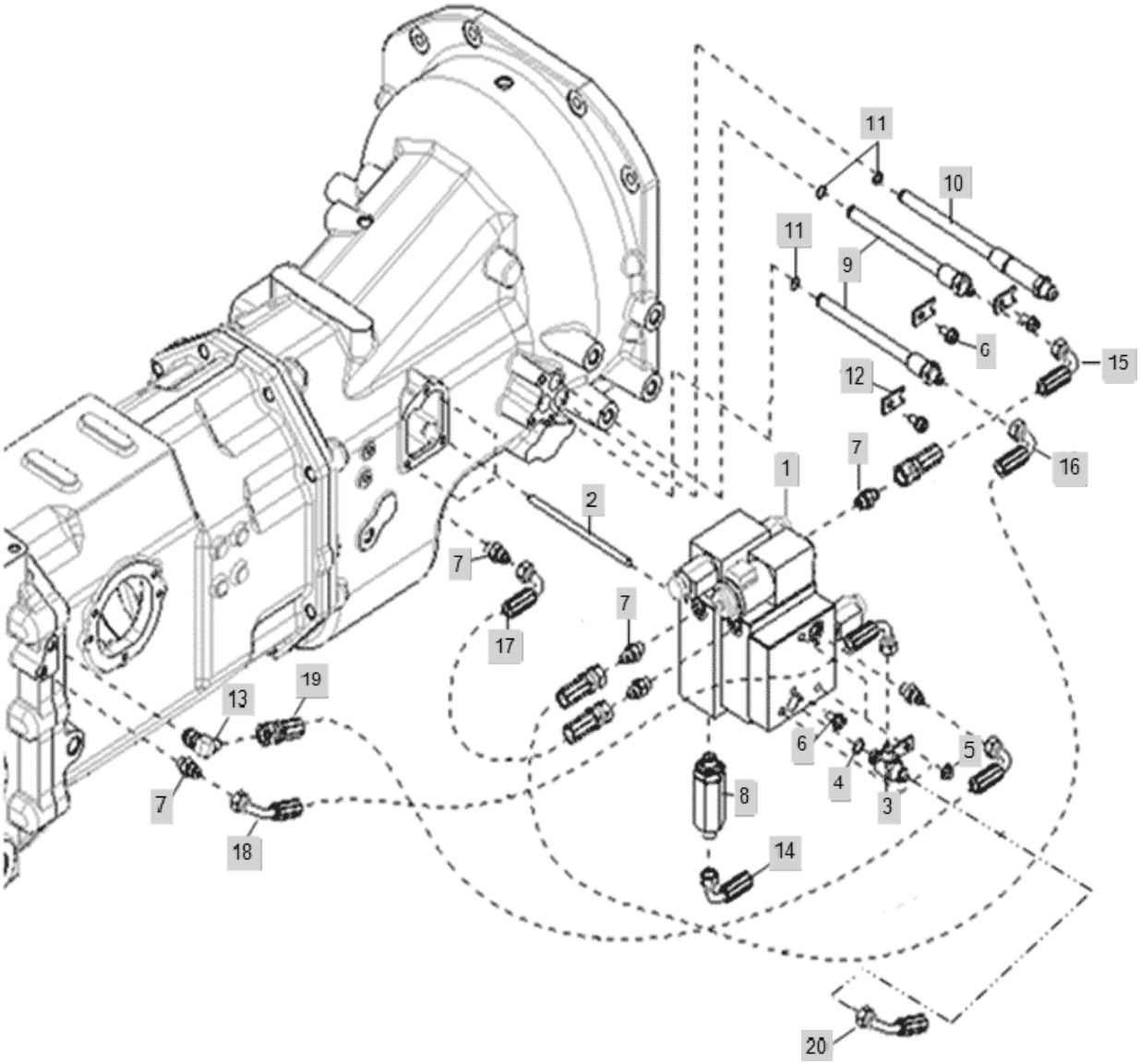

FIG T026 Branson 7845RP(US)	HYDRAULIC ASS`Y RELATION	Year/Month 2020/02

KeyNo.	Part Number	Part Name	Quantity	Other
1	TA00037634A	VALVE ASSY(W/O QT)	1	
2	TA00037398A	STUD BOLT	3	
3	TA00037394B	T-JOINT ASS'Y	1	
4	24311-000120	O-RING, DYNAMIC (Φ12)	1	
5	26367-080002	HEX FLANGE NUT (Φ8)	3	
6	26106-080162	SCREW,HEXFLANGEHEADCAP	4	
7	TA00017958A	NIBBLE	7	
8	TA00045469A	STRAINER	1	
9	TA00036913A	PIPE ASSY	2	
10	TA00036914B	PIPE ASSY	1	
11	24341-000120	O-RING, FIX (Φ12)	3	
12	TA00036069A	BRACKET, CONECTOR	3	
13	RRA4220000A	90 ELBOW LOCKNUT	1	
14	TA00037529B	HYD.HOSE	1	
15	TA00037526B	HYD.HOSE	1	
16	TA00037527A	HYD.HOSE	1	
17	TA00037528B	HYD.HOSE	1	
18	TA00037531B	HYD.HOSE	1	
19	TA00037154B	HYD. HOSE	1	
20	TA00037530A	HYD.HOSE	1	

FIG T027 Branson 7845RP(US)	P-D LEVER ASS`Y RELATION	Year/Month 2020/02

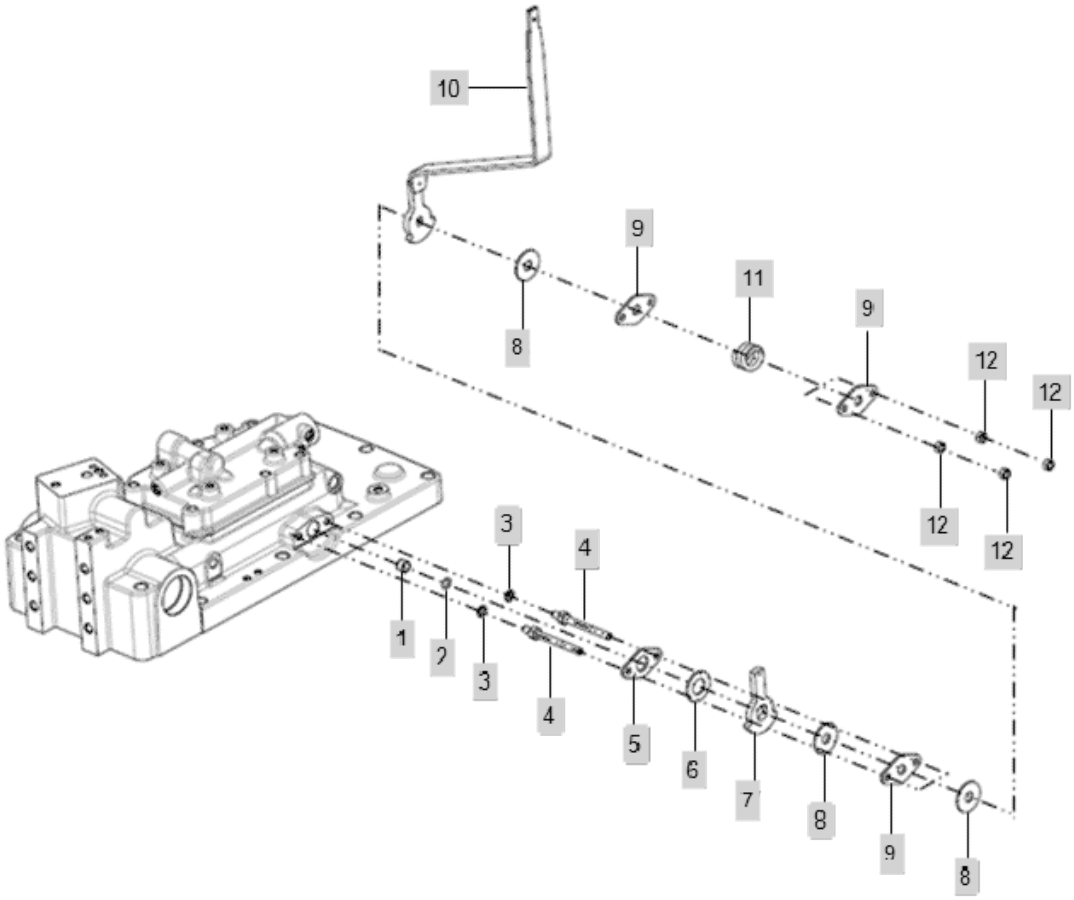

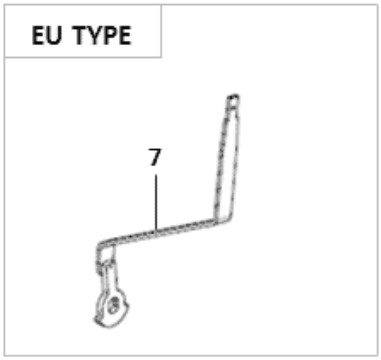

FIG T027 Branson 7845RP(US)	P-D LEVER ASS`Y RELATION	Year/Month 2020/02

KeyNo.	Part Number	Part Name	Quantity	Other
1	24550-012100	BUSH	2	
2	24311-240100	SEAL, O-RING	1	
3	22217-080000	WASHER, SPRING (Φ 08)	2	
4	TA00033978A	BOLT	2	
5	TA00039759A	LEVER BRACKET A	1	
6	TA00033155A	FRICTION PLATE	1	
7	TA00039749B	DRAFT CONTROL LEVER ARM	1	
8	TA00033966A	PLATE A	3	
9	TA00039760A	LEVER BRACKET B	3	
10	TA00039751B	P LEVER ASSY	1	
11	TA00033901A	SPRING	1	
12	26716-080002	NUT,HEX (D8)	4	

FIG T028 Branson 7845RP(US)	POSITION, DRAFT CONTROL ROD RELATION	Year/Month 2020/02

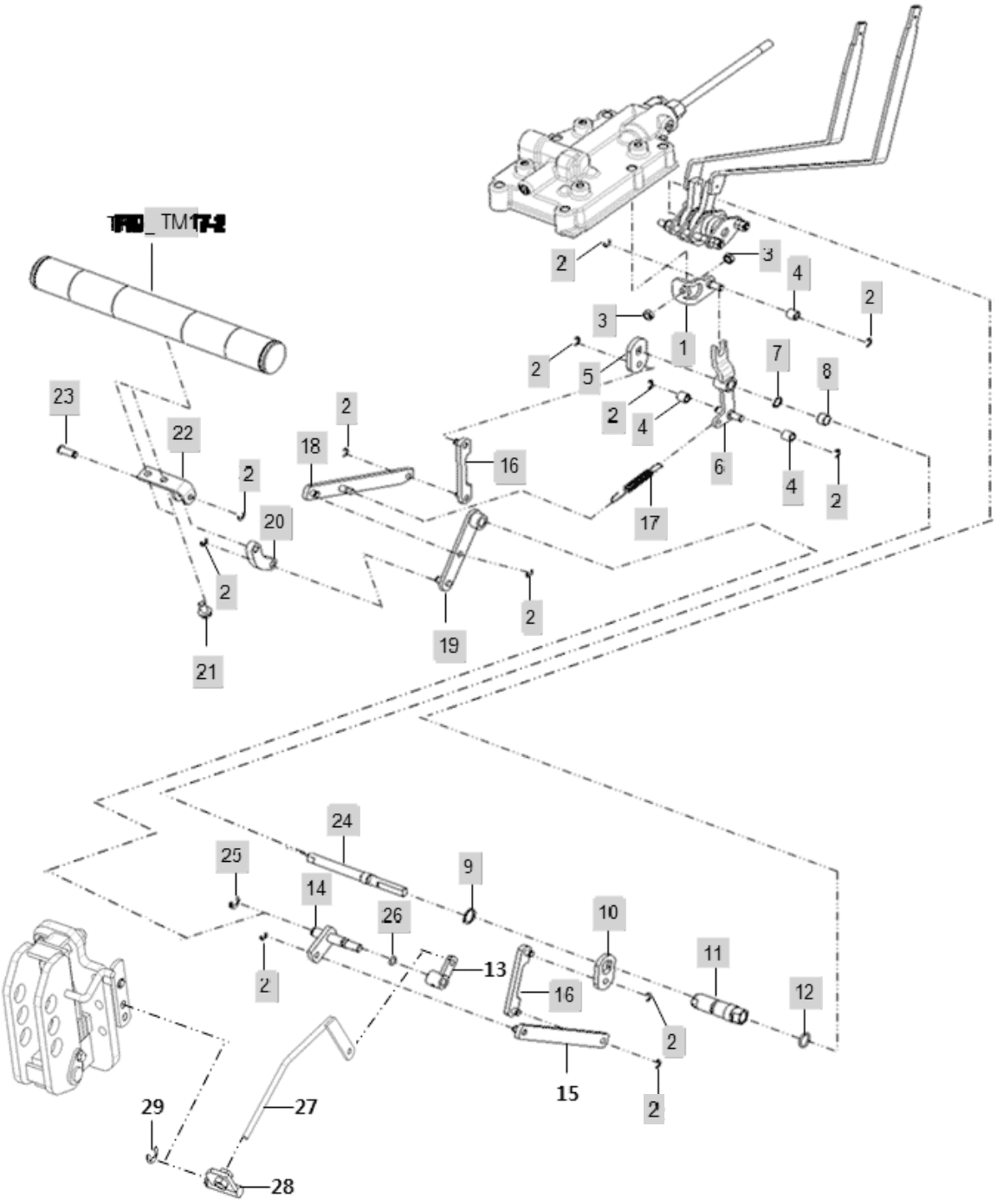

FIG T028 Branson 7845RP(US)	POSITION, DRAFT CONTROL ROD RELATION	Year/Month 2020/02

KeyNo.	Part Number	Part Name	Quantity	Other
1	TA00034000C	CLEVIS AS'Y	1	
2	22272-000060	RING, CIRCLIP (Φ 06)	8	
3	26751-080002	NUT	2	
4	TA00033126A	ROLLER	2	
5	TA00033120A	CONTROL PLATE, POSITION	1	
6	TA00033121B	LINK ASSY, CONNECTING	1	
7	22242-000120	SNAP RING, SHAFT (Φ 12)	1	
8	24550-012100	BUSH	2	
9	22242-000180	SNAP RING, SHAFT (Φ 18)	1	
10	TA00033119A	CONTROL PLATE, DRAFT	1	
11	TA00033127B	SHAFT	1	
12	24311-000160	O-RING, DYNAMIC (Φ16)	1	
14	TA00033108B	LINK ASSY (IN)	1	
16	TA00033117B	LINK ASSY B	1	
17	TA00033902C	SPRING	1	
18	TA00033114C	LINK, POSITION	1	
19	TA00039757B	POSITION FEEDBACK LINK	1	
20	TA00033102B	LINK, LIFT CRANK	1	
21	26106-080162	SCREW,HEXFLANGEHEADCAP	2	
22	TA00039754A	FEEDBACK LINK BRACKET	1	
23	TA00039776A	FEEDBACK LINK PIN	1	
24	TA00033128B	SHAFT	1	
25	22272-000090	RING, CIRCLIP (Φ 09)	1	
26	24311-000090	O-RING, DYNAMIC (Φ9)	1	
FIG_TM17-2	T017		1	