LS Tractor

Part Manual

C3030/C3040

LS Tractor USA, LLC
6900 Corporation Parkway,
Battleboro, NC 27809
Phone : 252-984-0700
Fax : 252-984-0701

ENGINE PART

■ C3030/C3040

CYLINDER HEAD ---------- FIG. 01
VALVE MECHANISM ---------- FIG. 01-02
CRANKCASE ASSY ---------- FIG. 04-01
CRANKCASE ---------- FIG. 04-02
TIMING GEAR CASE ---------- FIG. 05
OIL PAN ---------- FIG. 07-00-01
MAIN MOVING PARTS ---------- FIG. 07-00-02
TIMING GEAR ---------- FIG. 09
INLET & EXHAUST MANIFOLD ---------- FIG. 11
OIL PUMP ---------- FIG. 12
OIL SYSTEM ---------- FIG. 13
COOLING SYSTEM ---------- FIG. 17
FUEL SYSTEM ---------- FIG. 19
NOZZLE & NOZZLE HOLDER ---------- FIG. 20
INJECTION PUMP ---------- FIG. 21
FUEL FILTER ---------- FIG. 23
GOVERNOR ---------- FIG. 27
ELECTRIC PARTS ---------- FIG. 30
STARTER (12V-2.0Kw) ---------- FIG. 32
CONTROL SYSTEM ---------- FIG. 35
INSTRUMENT ---------- FIG. 35-02
OVERHAUL GASKET KIT ---------- FIG. 36
OIL FILTER ---------- FIG. 40
AIR BREATHER ---------- FIG. 43
COOLING PUMP ---------- FIG. 45
COOLING SYSTEM ---------- FIG. 46
COOLING FAN ---------- FIG. 48
FUEL PUMP ---------- FIG. 60
FUEL SYSTEM ---------- FIG. 61-01
NOZZLE & NOZZLE HOLDER ---------- FIG. 61-02
FUEL FILTER ---------- FIG. 62
GOVERNOR ---------- FIG. 63-00-02
INJECTION PUMP ---------- FIG. 65-00-01
INJECTION PUMP ---------- FIG. 65-00-02
INJECTION PUMP ---------- FIG. 65-02
STARTER (12V-2.0Kw) ---------- FIG. 66-01
GLOW PLUG ---------- FIG. 66-02
STARTER (12V-2.0Kw) ---------- FIG. 66-03
ALTERNATOR ---------- FIG. 68-01
ALTERNATOR ---------- FIG. 68-02
CONTROL SYSTEM ---------- FIG. 87
ELECTRIC PARTS FIG. 90
GASKET KIT ---------- FIG. 94

CYLINDER HEAD

FIG. 01

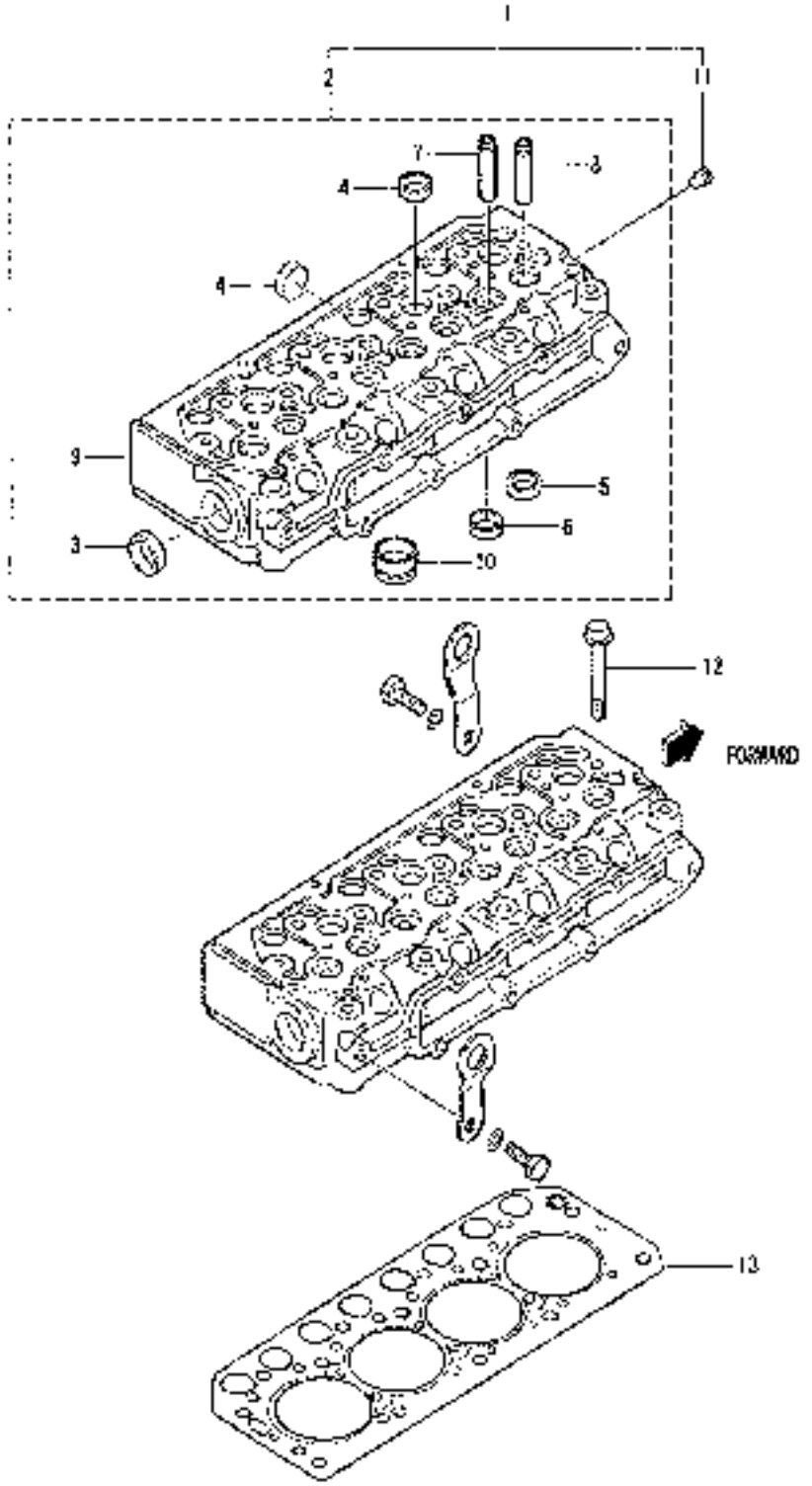

CYLINDER HEAD

FIG. 01

NO.	PART NO.	PART NAME & DESCRIPTION	QTY A	QTY B	QTY C	APP NO	REM
1	31A01-21002	HEAD ASSY, CYLINDER	1	1	1		
	31A01-51042	HEAD ASSY, CYLINDER	*	*	1		
2	*	CYL. HEAD ASSY	1	1	1		
3	MD000245	PLUG MD000245-MAM	1	1	1		40056402
4	MF665535	CAP, SEALING	7	7	7		
5	*	SEAT, INLET VALVE	4	4	4		
6	*	SEAT, EXHAUST EXHAUST	4	4	4		
7	31A01-02500	GUIDE, EXHAUST VALVE	4	4	4		
8	31A01-02600	GUIDE, INLET VALVE	4	4	4		
9	*	HEAD, CYLINDER	1	1	1		
10	31A03-01101	JET, COMBUSTION	4	4	1		
	31A03-01500	JET, COMBUSTION	*	*	4		
11	MS681140	PLUG, TAPERED	1	1	1		
12	31A01-11101	BOLT, CYLINDER HEAD	14	14	14		
13	31A01-03300	GASKET, CYLINDER HEAD	1	1	1		

LIFTING EYE

FIG. 01-02

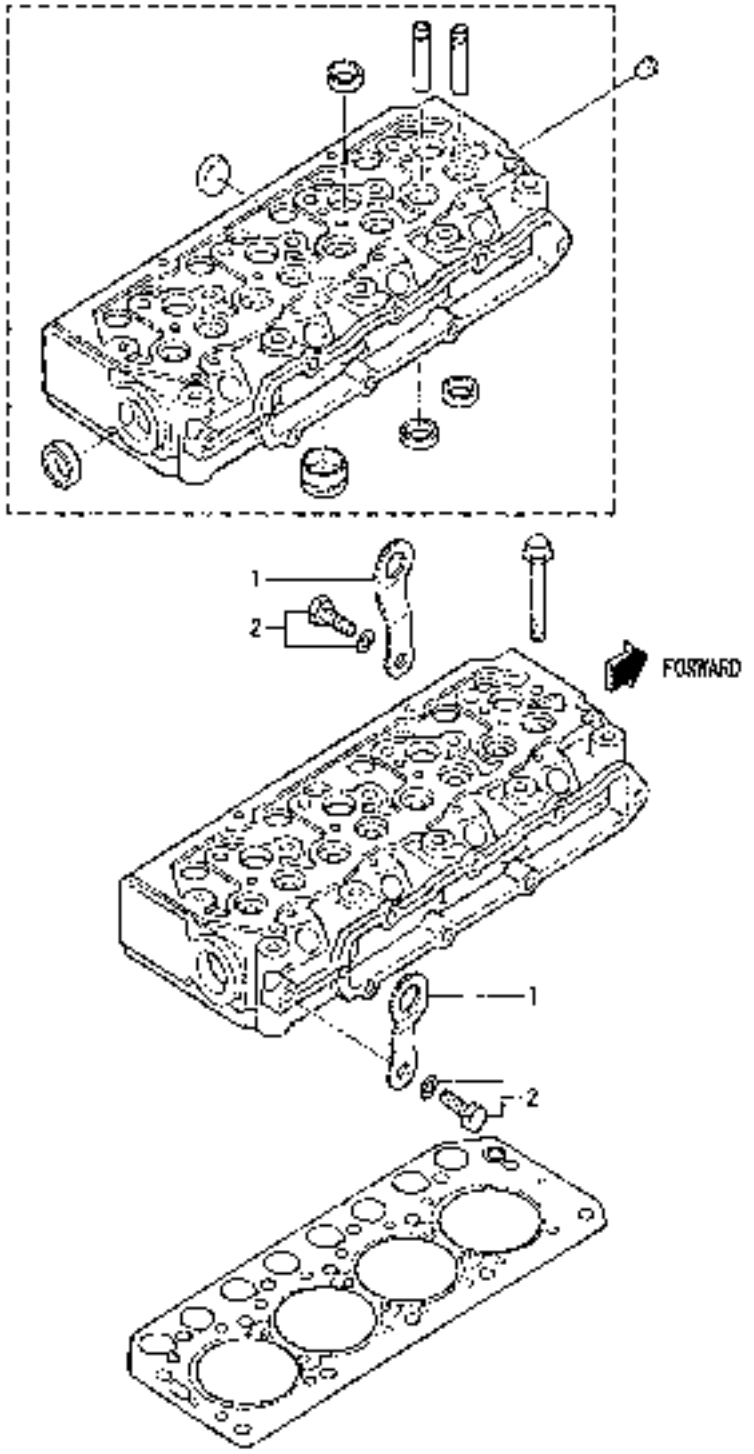

LIFTING EYE

FIG. 01-02

NO.	PART NO	PART NAME & DESCRIPTION	QTY A	QTY B	QTY C	APP. NO	REM
1	MM109470	HANGER, ENGINE	2	2	2		
2	MF241280	BOLT, W/WASHER	2	2	2		

VALVE MECHANISM

FIG. 04-01

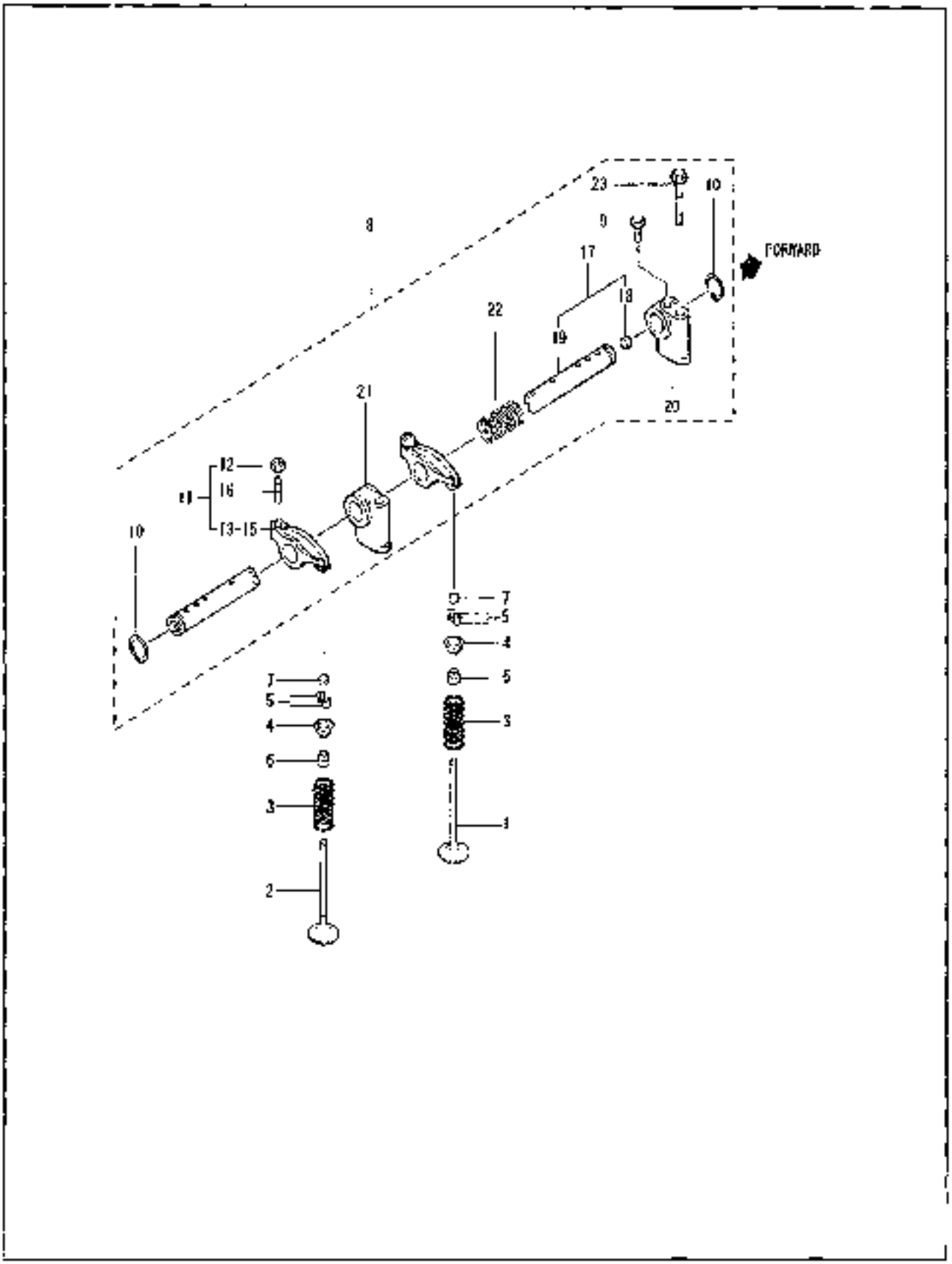

VALVE MECHANISM

FIG. 04-01

NO.	PART NO.	PART NAME & DESCRIPTION	QTY A	QTY B	QTY C	APP. NO	REM.
1	31A04-42100	VALVE, INLET	4	4	4		
2	31A04-35700	VALVE, EXHAUST	4	4	4		
3	31A04-01201	SPRING, VALVE	8	8	8		
4	MM433-50601	RETAINER, VALVE	8	8	8		
5	MD016483	VALVE, LOCK	16	16	16		
6	MD115472	SEGMENT-MD115472-MAM	8	8	8		40055399
7	31A04-01700	CAP, VALVE	8	8	8		
8	*	ROCKER & SHAFT ASSY	1	1	1		
9	H1035-05010	BOLT	1	1	1		
10	MF522010	RING, SNAP	2	2	2		
11	31A04-11024	ROCKER ASSY	8	8	8		
12	F2325 09000	NUT, JAM	8	8	8		
13	*	ROCKER ARM ASSY	8	8	8		
14	*	TIP, ROCKER ARM	8	8	8		
15	*	ROCKER ARM	8	8	8		
16	32A04-07401	SCREW, ROCKER	8	8	8		
17	31A04-71010	SHAFT ASSY ROCKER	1	1	1		
18	MD021204	CAP, SEALING	2	2	2		
19	*	SHAFT, ROCKER	1	1	1		
20	31A04-34100	BRACKET, ROCKER SHAFT	1	1	1		
21	31A04-34300	BRACKET, ROCKER SHAFT	3	3	3		
22	32C04-04500	SPRING, ROCKER	3	3	3		
23	32C04-05100	BOLT, ROCKER BRACKET	4	4	4		

ROCKER COVER

FIG. 04-02

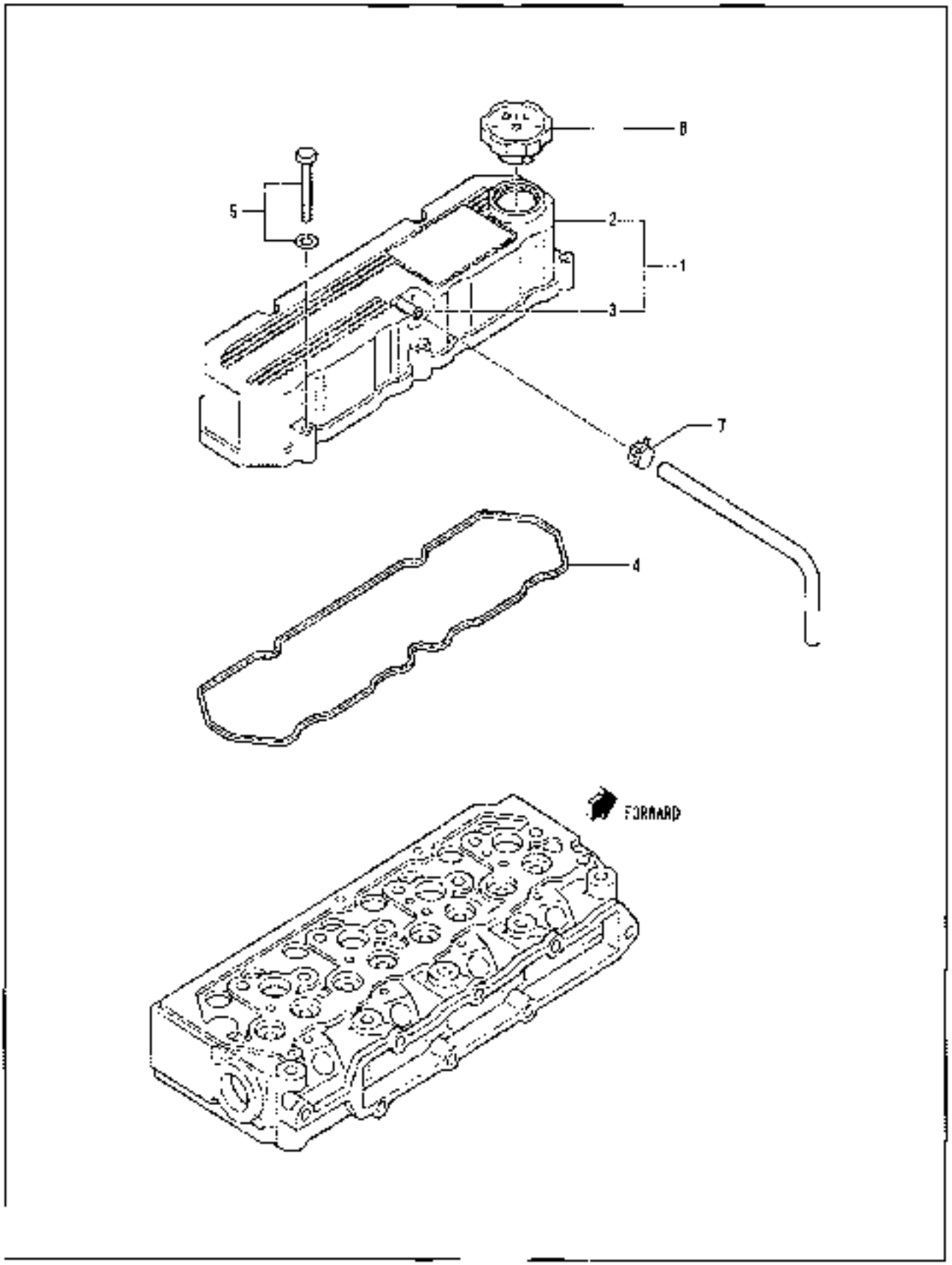

FIG. 04-02

NO.	PART NO.	PART NAME & DESCRIPTION	QTY A	QTY B	QTY C	APP. NO	REV.
1	31A04-20032	COVER	-	1	1		
2	*	COVER, ROCKER	-	1	1		
3	*	PIPE, BREATHER	-	1	1		
4	31A04-33202	GASKET, ROCKER	1	1	1		
5	MF241261	BOLT, W/WASHER	5	5	5		
6	MD008784	CAP, OIL FILLER	1	1	1		40055751
7	MS470059	CLIP	-	1	1		

FIG. 05

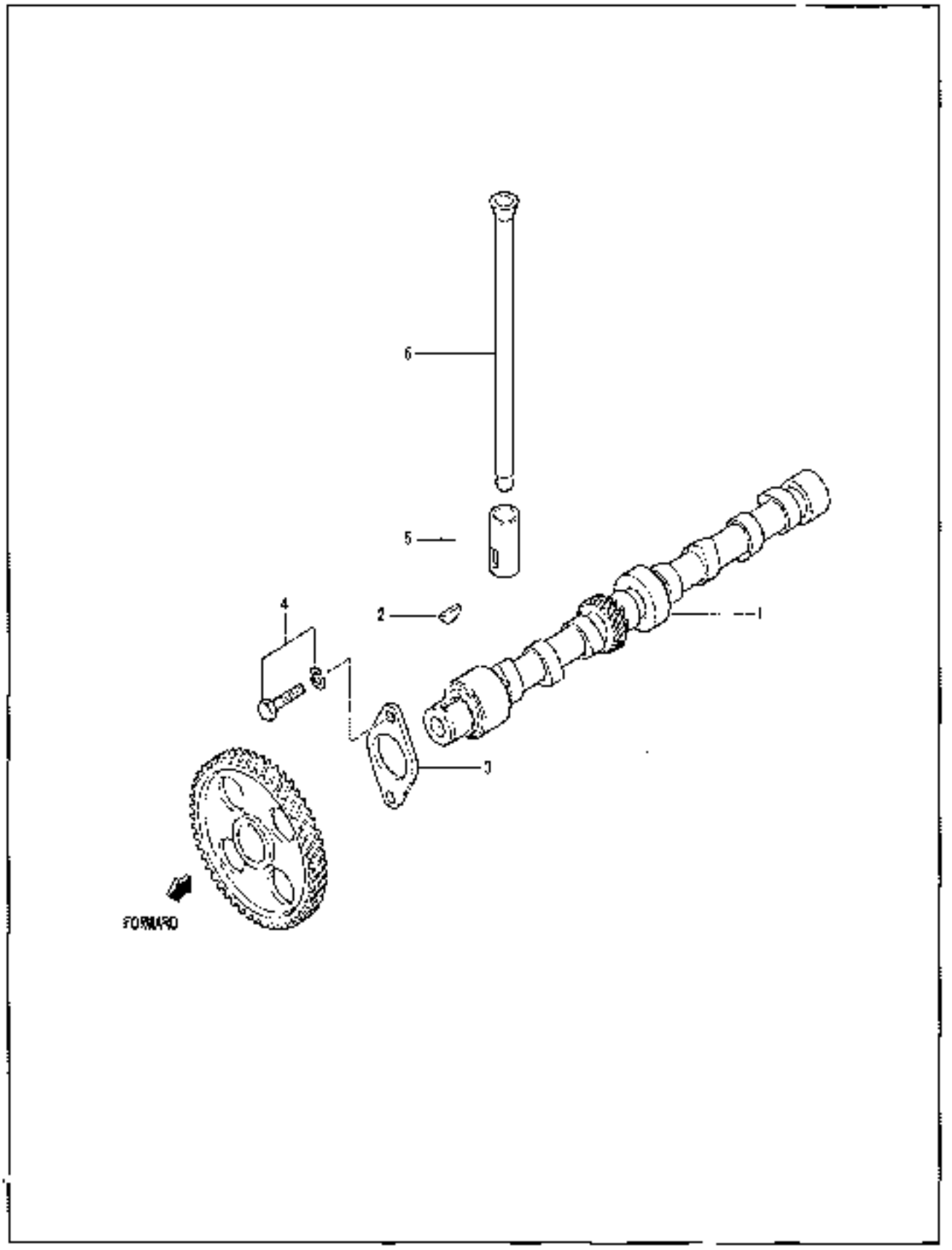

07-06-25

01

CAMSHAFT

FIG. 05

NO.	PART NO.	PART NAME & DESCRIPTION	QTY A	QTY B	QTY C	APP.NO	REM.
1	31A05-00207	CAMSHAFT	1	1	1		
2	MF476215	KEYWOODRUFF-MF476215-M8	1	1	1		40052815
3	31405-31400	PLATE, THRUST	1	1	1		
4	MF240031	BOLT, W/WASHER	2	2	2		
5	31A05-00300	TAPPET	8	8	8		
6	31A05-01300	ROD, PUSH	8	8	8		

07-06-25

01

CRANKCASE

FIG. 07-00-01

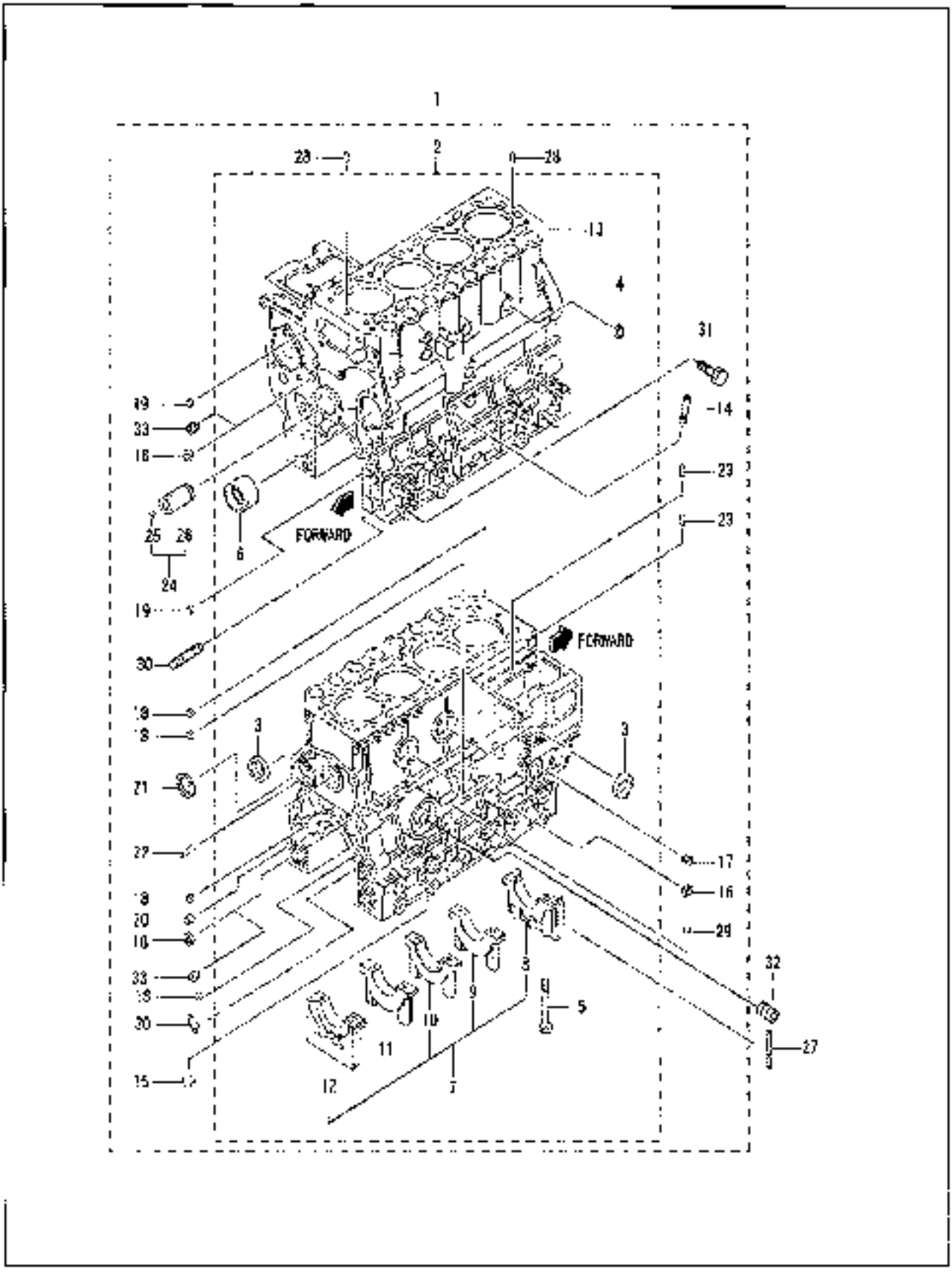

FIG. 07-00-01

NO.	PART NO	PART NAME & DESCRIPTION	QTY A	QTY B	QTY C	APP NO	REM.
1	31A07-72010	BLOCK ASSY, CYLINDER	1	1	*		
	31A07-16010	BLOCK ASSY, CYLINDER	*	*	1		
2	*	BLOCK SUB ASSY, CYL	1	1	1		
3	04826-22000	CAP, SEALING	3	3	3		
4	04826-23500	CAP, SEALING	3	3	3		
5	31A07-00801	BOLT, BEARING, CAP	10	10	10		
6	31A07-03100	BUSH, CAMSHAFT	1	1	1		
7	*	CAP SET, BEARING	1	1	1		
8	*	CAP, BEARING FRONT	1	1	1		
9	*	CAP, BEARING NO.2	1	1	1		
10	*	CAP, BEARING NO.3	1	1	1		
11	*	CAP, BEARING NO.4	1	1	1		
12	*	CAP, BEARING REAR	1	1	1		
13	*	BLOCK, CYLINDER	1	1	1		
14	MM490813	GUIDE, OIL LEVEL GAUGE	1	1	1		
15	MF665537	CAP, SEALING	1	1	1		
16	MF685533	CAP, SEALING	1	1	1		
17	MS661140	PLUG, TAPERED	1	1	1		
18	MS474104	BUSHING, KNOCK	4	4	4		
19	MS474105	BUSHING, KNOCK	2	2	2		
20	MS474110	BUSHING, KNOCK	1	1	1		
21	MF665611	PLUG, EXPANSION	1	1	1		
22	MF472404	PIN, DOWEL	1	1	1		
23	MM409645	PIN, DOWEL	2	2	2		
24	31A23-00951	SHAFT ASSY, IDLER	1	1	1		
25	*	BALL, STEEL	1	1	1		
26	*	SHAFT, IDLER	1	1	1		
27	31A07-12700	SEAL, SIDE	4	4	4		
28	02846-05000	PIN, DOWEL	2	2	2		
29	MD024255	PLUG, TAPER	1	1	1		
30	31A07-02500	STUD	2	2	2		
31	MF100110	BOLT	4	4	4		
32	30LD7-00700	SHAFT, OIL FILTER	1	1	1		
33	04827-90130	PLUG, TAPERED	2	2	2		

FIG. 07-00-02

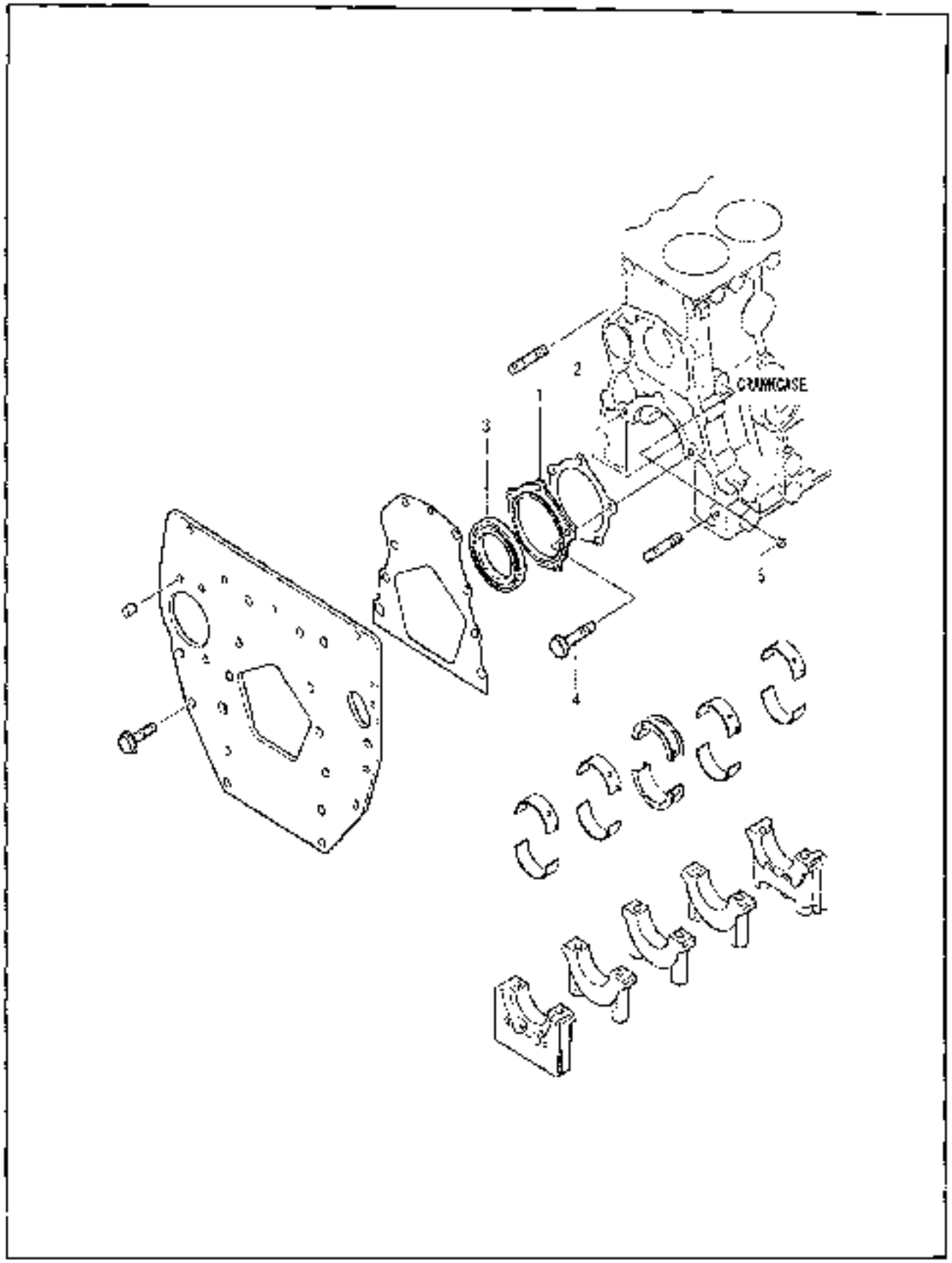

07-06-25

FIG. 07-00-02

NO	PART NO	PART NAME & DESCRIPTION	QTY A	QTY B	QTY C	APP NO	REM
1	31A07-11601	CASE, OIL SEAL	1	1	1		
2	31A07-11701	GASKET, OIL SEAL CASE	1	1	1		
3	31A07-02300	SEAL, OIL	1	1	1		
4	MF100055	BOLT	5	5	5		
5	MD100269	PLUG, TAPERED	1	1	1		

MAIN BEARING

FIG. 09

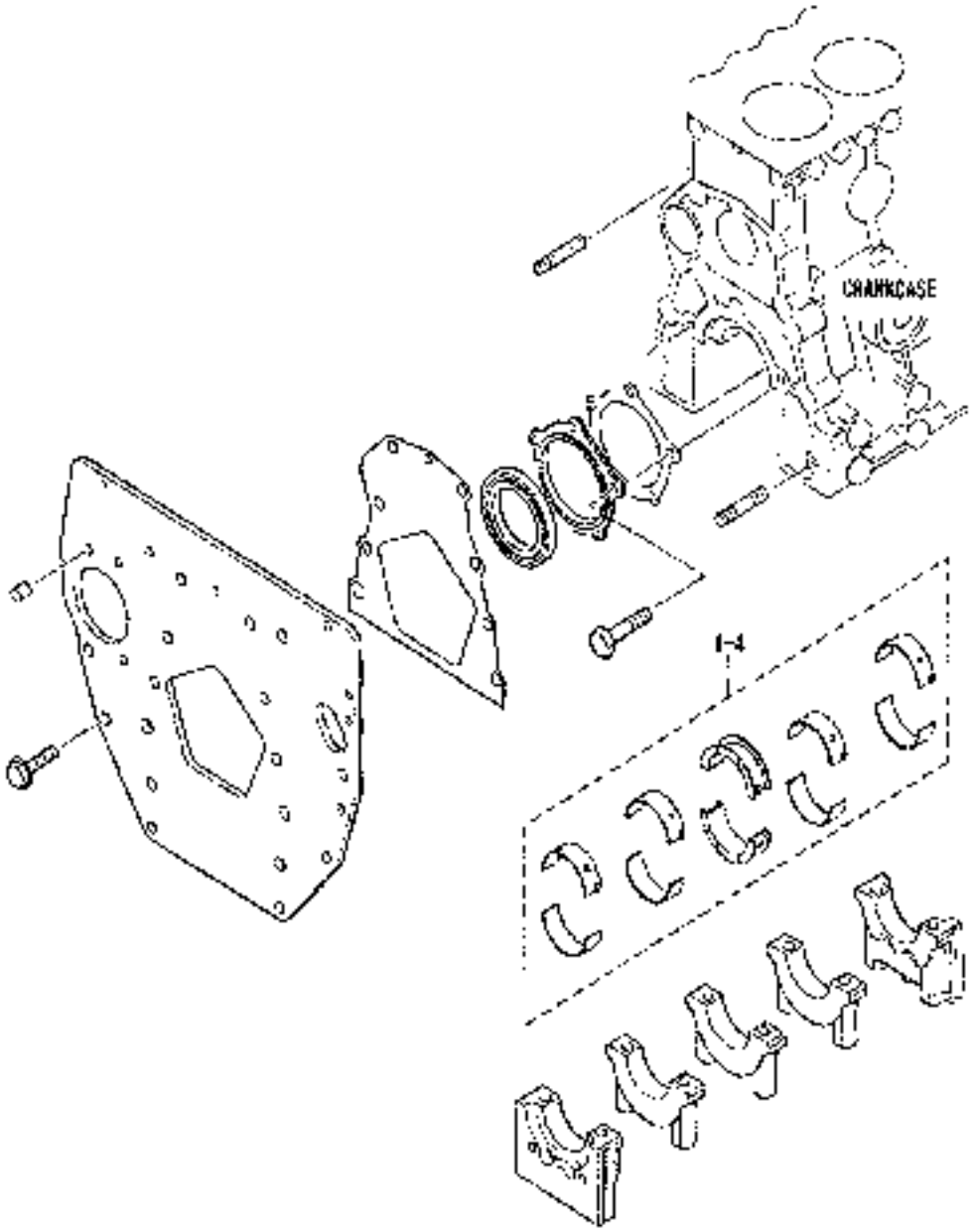

MAIN BEARING

FIG. 09

NO.	PART NO.	PART NAME & DESCRIPTION		QTY A	QTY B	QTY C	APP NO	REM
1	MM437343	BEARING SET, MAIN	STD	1	1	1		
2	MM437864	BEARING SET, MAIN	U.S 0.25	1	1	1		
3	MM437865	BEARING SET, MAIN	U.S 0.50	1	1	1		
4	MM437866	BEARING SET, MAIN	U.S 0.75	1	1	1		

07-06-25

01

TIMING GEAR CASE

FIG. 11

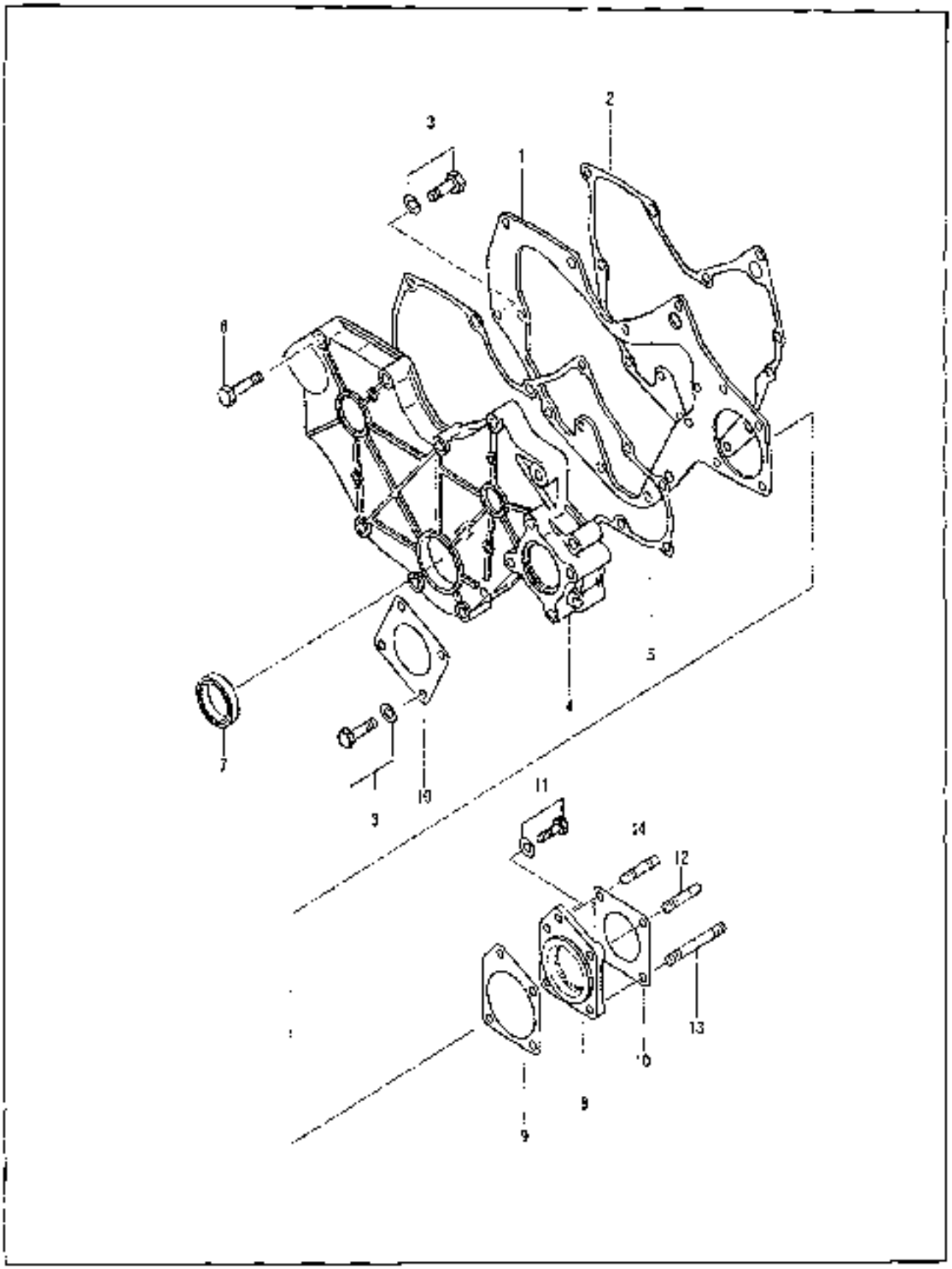

07-06-25

01

TIMING GEAR CASE

FIG. 11

NO.	PART NO.	PART NAME & DESCRIPTION	QTY A	QTY B	QTY C	APP.NO	RPM
1	31A11-02400	PLATE, FRONT	1	1	1		
2	31A07-11001	GASKET, FRONT PLATE	-	1	1		
3	MF240057	BOLT, W/WASHER	5	5	5		
4	31A11-00001	CASE, GEAR PTO	1	1	1		
5	31A11-11101	GASKET, GEAR	1	1	1		
6	MF100081	BOLT	6	8	8		
7	MD009762	SEAL OIL-MD006762-NHI	1	1	1		40055740
8	31A11-35101	HOUSING, GEAR	1	1	1		
9	31A11-35201	GASKET, HOUSING	1	1	1		
10	30A11-00103	GASKET, O/PUMP COVER	2	2	2		
11	MF241257	BOLT W/WASHER	1	1	1		
12	MF401427	STUD(8X25)	1	1	1		
13	MS401435	STUD(8X45)	1	1	1		
14	MF401426	STUD(8X22)	2	2	2		

07-06-25

C1

FLYWHEEL HOUSING

FIG. 12

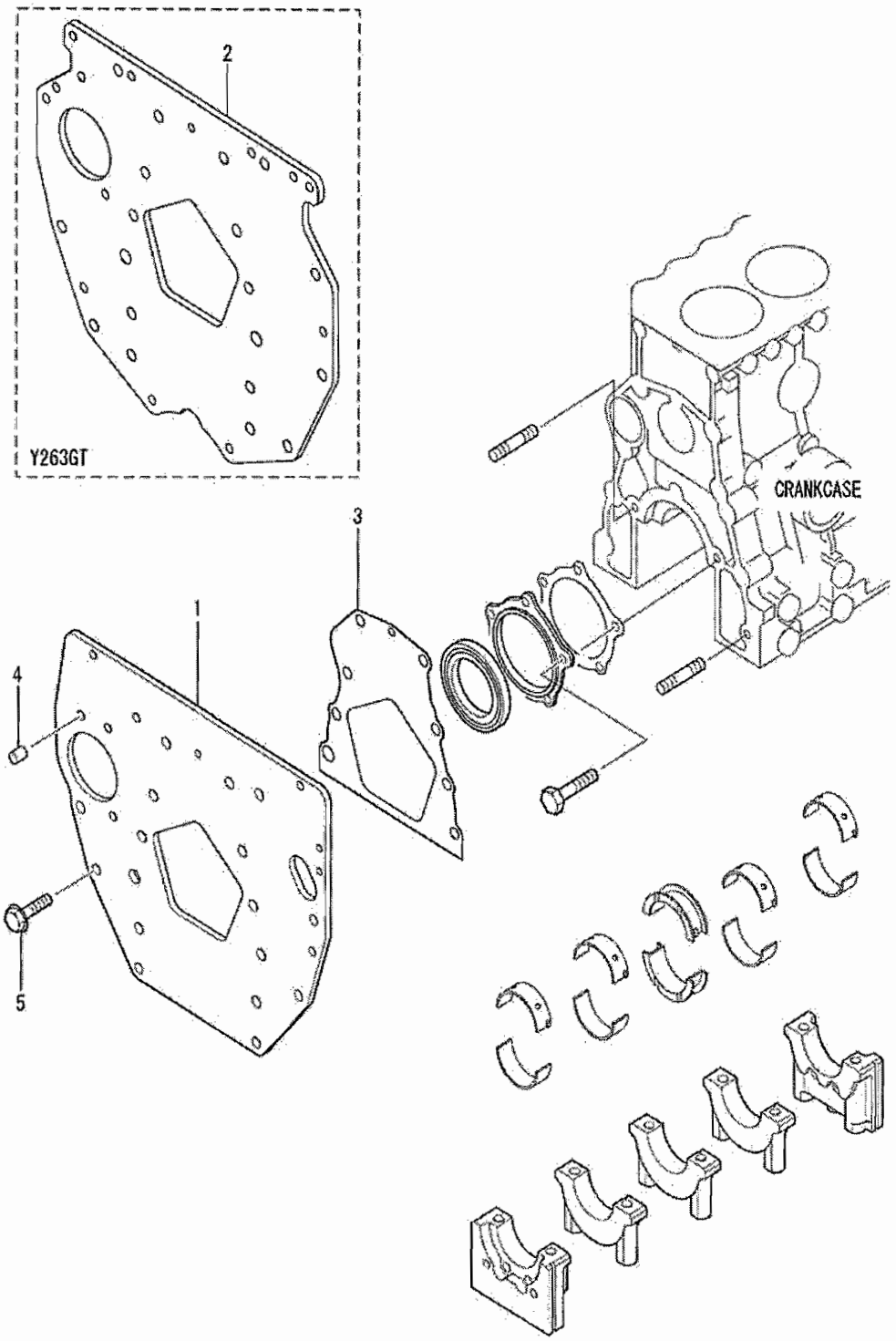

FLYWHEEL HOUSING

FIG. 12

NO.	PART NO.	PART NAME & DESCRIPTION		QTY A	QTY B	QTY C	APP.NO	REM.
1	31A07-04501	PLATE, REAR		1	1	*		
2	31A07-25300	PLATE, REAR		*	*	1		
3	31A07-02401	GASKET, REAR		1	1	1		
4	MM408245	PIN, KNOCK		2	2	2		
5	31A08-04102	BOLT, FLANGE		10	10	10		

07-06-25

01

OIL PAN & ENGINE SUPPORT

FIG. 13

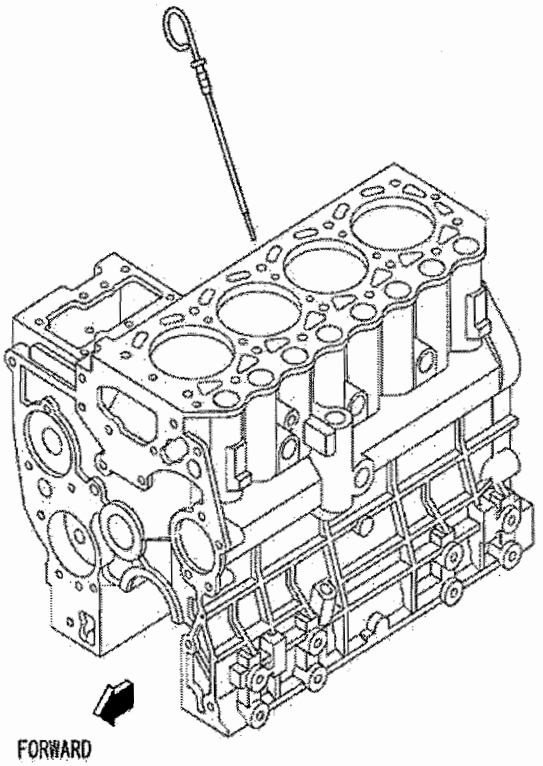

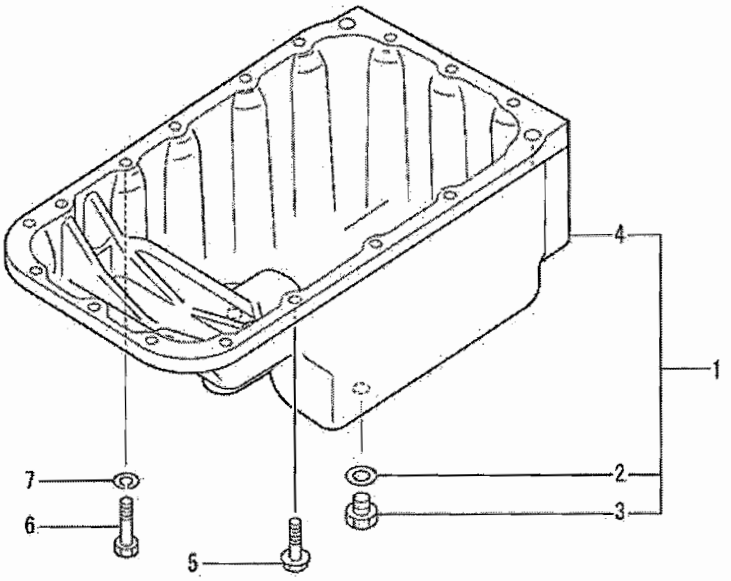

OIL PAN & ENGINE SUPPORT

FIG. 13

NO.	PART NO.	PART NAME & DESCRIPTION		QTY A	QTY B	QTY C	APP.NO	REM.
1	31A13-02020	PAN		1	1	1		
2	MF660065	GASKET, OIL DRAIN		2	2	2		
3	MF665004	PLUG, DRAIN		2	2	2		
4	*	PAN, OIL		1	1	1		
5	30H13-00800	BOLT, FLANGE		16	16	16		
6	F1035-08040	BOLT		1	1	1		
7	F2515-08000	WASHER, SPRING		1	1	1		

PISTON

FIG. 17

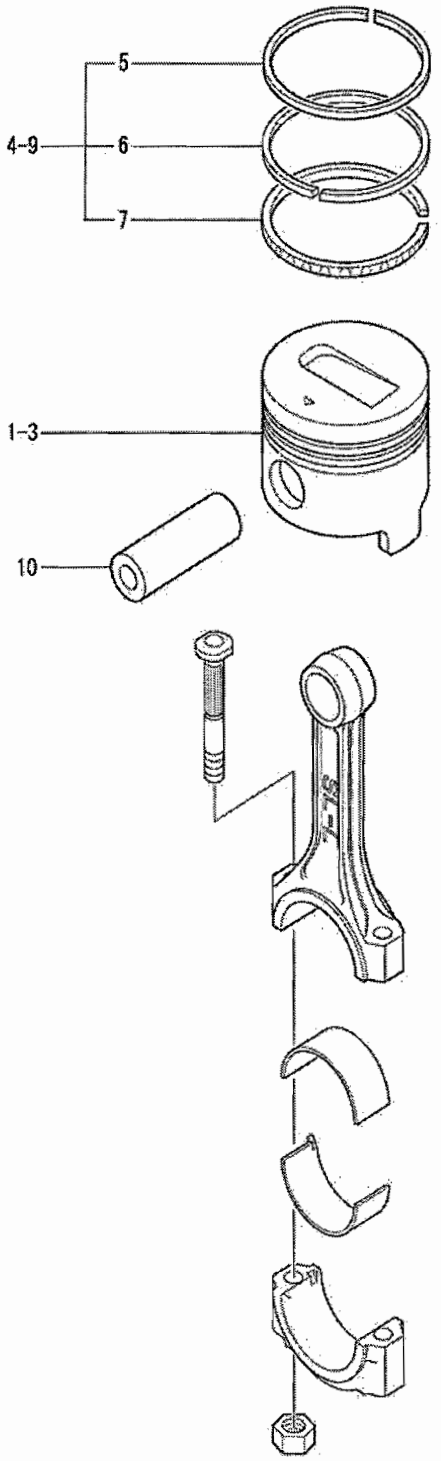

07-06-25

01

PISTON

FIG. 17

NO.	PART NO.	PART NAME & DESCRIPTION		QTY A	QTY B	QTY C	APP.NO	REM.
1	31A17-11100	PISTON	STD	4	4	4		
2	31A17-11200	PISTON	O.S 0.25	4	4	4		
3	31A17-11300	PISTON	O.S 0.50	4	4	4		
4	MM433921	RING SET, PISTON	STD	4	4	4		
5	*	RING, PISTON NO.1		4	4	4		
6	*	RING, PISTON NO.2		4	4	4		
7	*	RING ASSY, OIL		4	4	4		
8	MM433922	RING SET, PISTON	O.S 0.25	4	4	4		
9	MM433923	RING SET, PISTON	O.S 0.50	4	4	4		
10	31A17-10602	PIN, PISTON		4	4	4		

CONNECTION ROD

FIG. 19

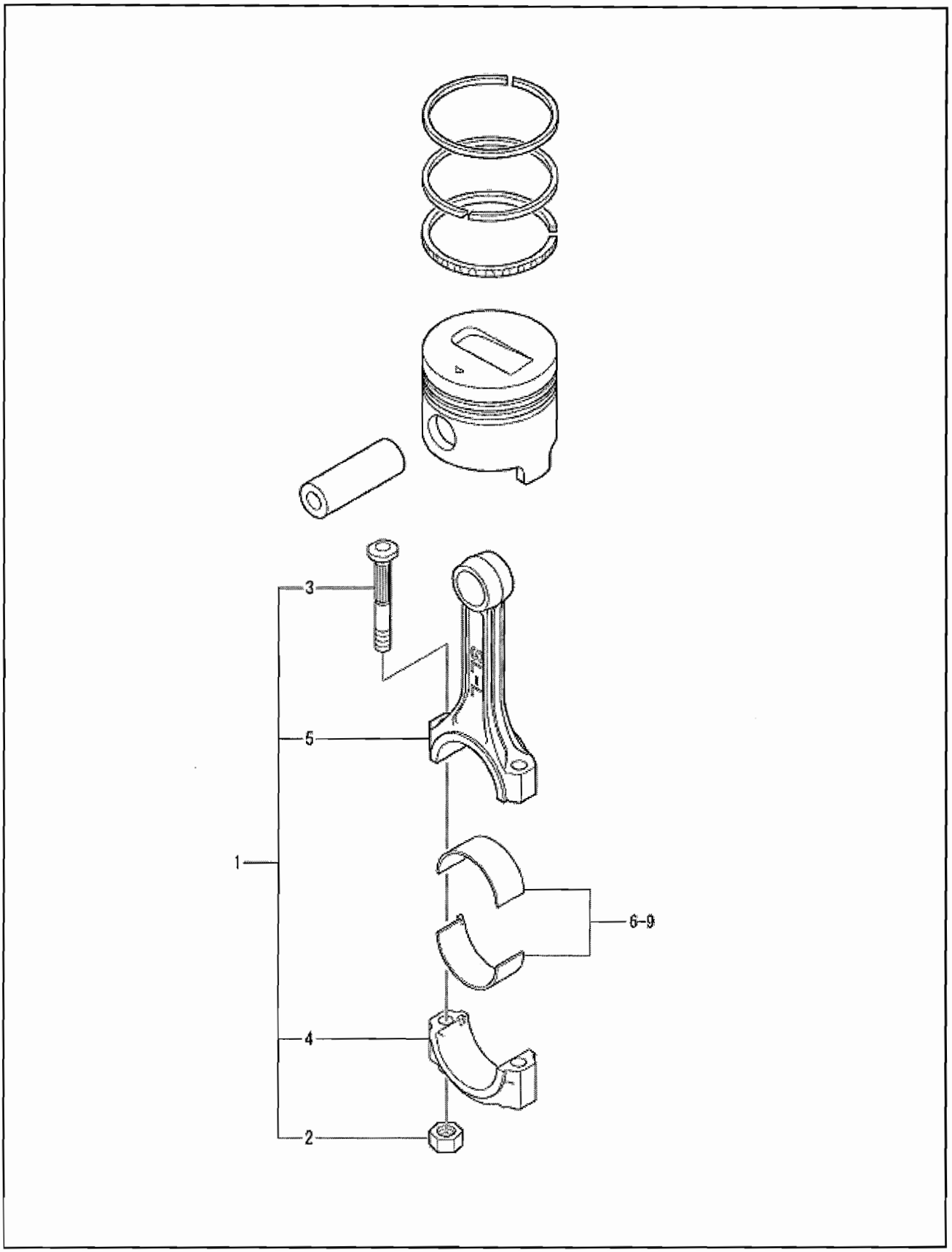

07-06-25 01

CONNECTION ROD

FIG. 19

NO.	PART NO.	PART NAME & DESCRIPTION		QTY A	QTY B	QTY C	APP.NO	REM.
1	31A19-10024	ROD ASSY, CONNECTING		4	4	*		
	31A19-01023	ROD ASSY, CONNECTING		*	*	4		
2	MD006704	NUT, CONNECTING ROD		8	8	*		
	MD006704	NUT, CONNECTING ROD		*	*	8		
3	MD021105	CONROD CAP BOLT-MD021105-MHI		8	8	8		40055756
4	*	CAP, CONNECTING ROD		4	4	*		
	*	CAP, CONNECTING ROD		*	*	4		
5	*	ROD, CONNECTING		4	4	*		
	*	ROD, CONNECTING		*	*	4		
6	MM437305	METAL 0.50-MM437305-MAM	STD	4	4	4		40055361
7	30A19-10010	METAL SET, CON-ROD	U.S 0.25	4	4	4		
8	30A19-10020	METAL SET, CON-ROD	U.S 0.50	4	4	4		
9	30A19-10030	METAL SET, CON-ROD	U.S 0.75	4	4	4		

FIG. 20

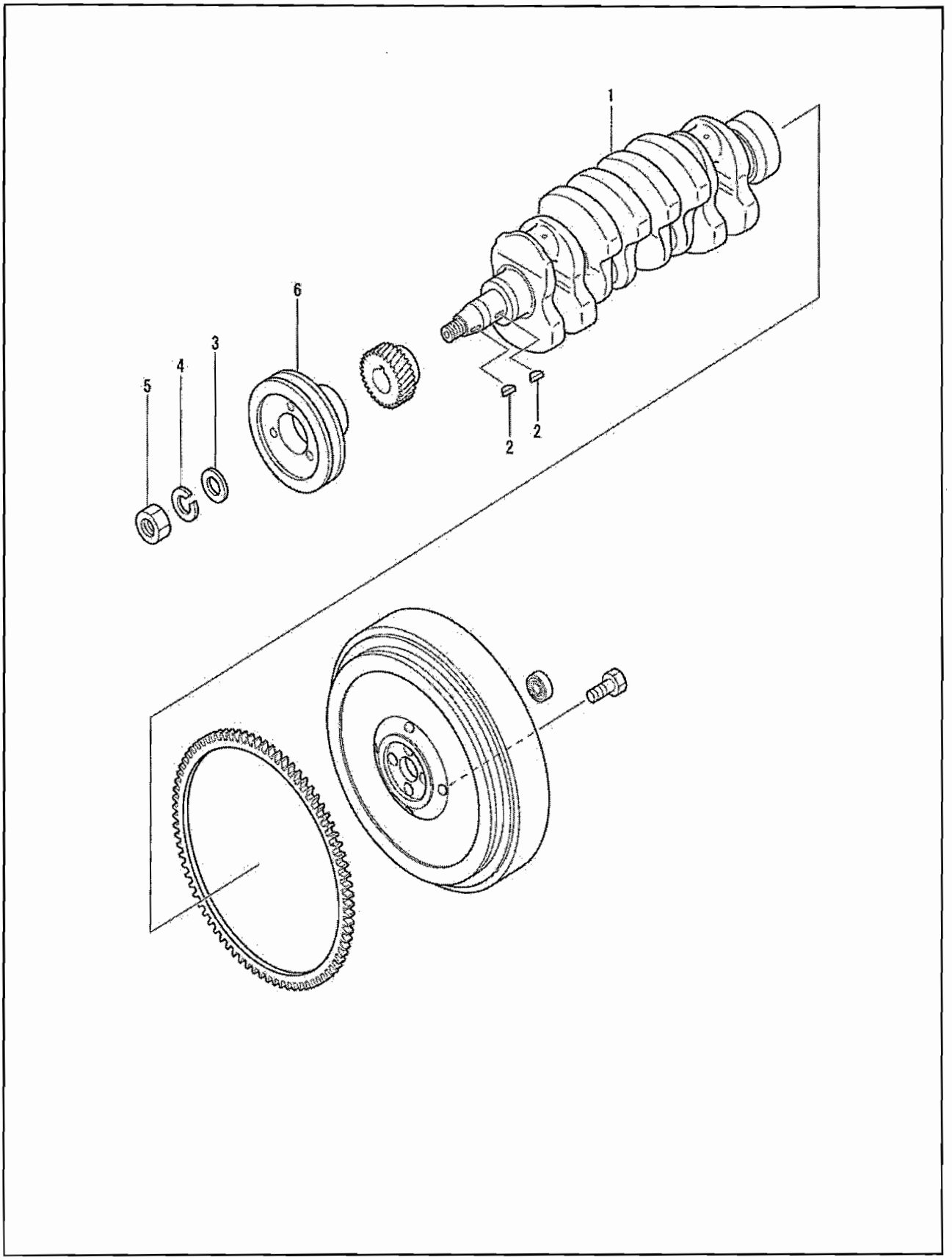

07-06-25 01

CRANKSHAFT

FIG. 20

NO.	PART NO.	PART NAME & DESCRIPTION		QTY A	QTY B	QTY C	APP.NO	REM.
1	31A20-00103	CRANKSHAFT		1	1	*		
	31A20-00201	CRANKSHAFT		*	*	1		
2	MF476215	KEYWOODRUFF-MF476215-MHI		2	2	2		40052815
3	MF450010	WASHER, PLAIN		1	1	1		
4	MF450410	WASHER, SPRING		1	1	1		
5	MF430126	NUT		1	1	1		
6	31A20-22102	PULLEY, CRANKSHAFT		1	1	1		

FLYWHEEL

FIG. 21

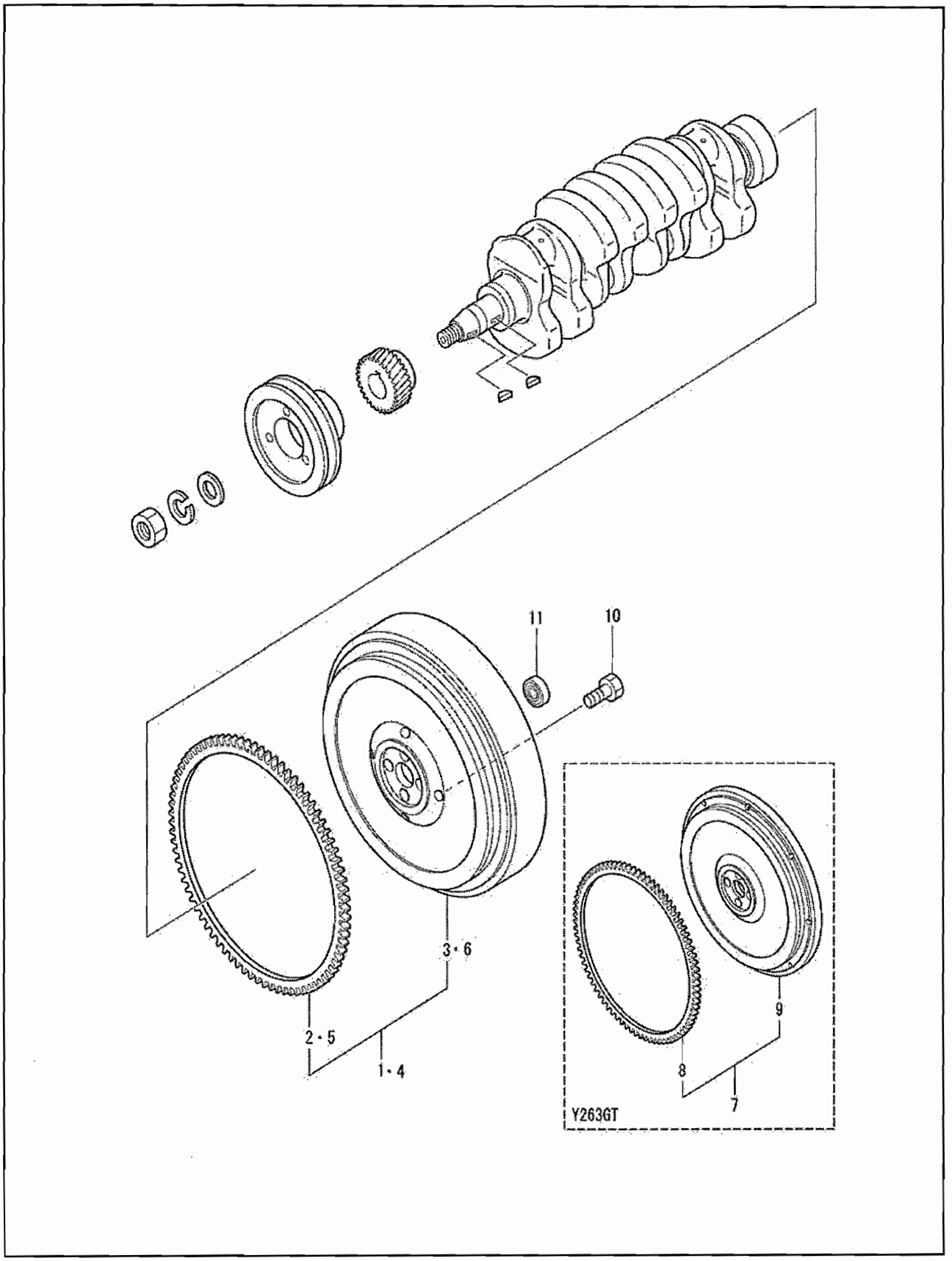

07-06-25

01

FLYWHEEL

FIG. 21

NO	PART NO.	PART NAME & DESCRIPTION		QTY A	QTY B	QTY C	APP.NO	REM.
1	31A21-01070	FLYWHEEL SUB ASSY		1	1	*		
2	MD024812	GEAR, RING	Z=120	1	*	*		
3	*	FLYWHEEL		*	*	*		
4	31A21-01070	FLYWHEEL SUB ASSY		*	*	*		
5	MD024812	GEAR, RING	Z=120	*	*	*		
6	*	FLYWHEEL		*	*	*		
7	31A21-01070	FLYWHEEL SUB ASSY		*	*	1		
8	MD024812	GEAR, RING	Z=120	*	*	1		
9	*	FLYWHEEL		*	*	1		
10	31A21-03900	BOLT, DRIVE PLATE		4	4	4		
11	MD062613	BEARING, BALL		1	1	1		

TIMING GEAR

FIG. 23

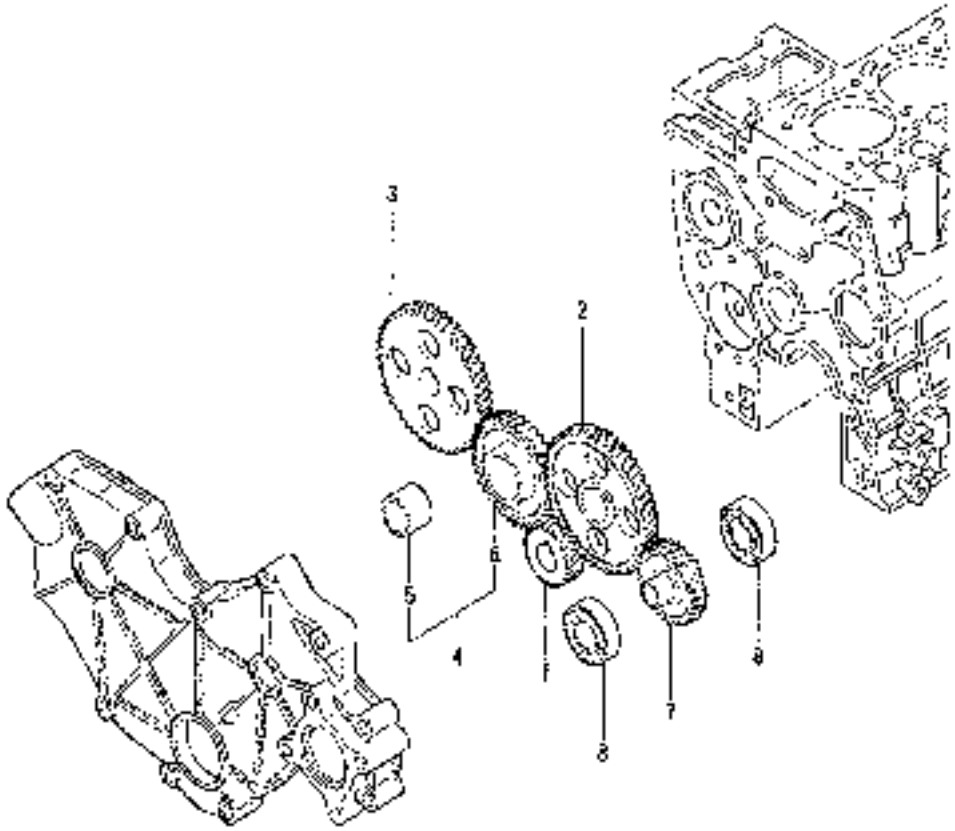

FIG. 23

NO.	PART NO.	PART NAME & DESCRIPTION		QTY A	QTY B	QTY C	APP.NO	REM.
1	31A23-01302	GEAR, CRANKSHAFT	Z=28	1	1	-		
2	31A23-01436	GEAR, CAMSHAFT	Z=56	1	1	-		
3	31A23-00800	GEAR, INJECTION PUMP	Z=56	-	-	1		
4	31A23-01075	GEAR ASSY, IDLER	Z=39	-	-	1		
5	*	BUSHING, IDLER GEAR		-	1	1		
6	*	GEAR, IDLER		1	1	1		
7	31A23-01502	GEAR, PRESS OIL PUMP	Z=28	1	1	1		
8	MD712517	BEARING MD712517-MH.		2	2	2		40052807

TACHO DRIVE

FIG. 27

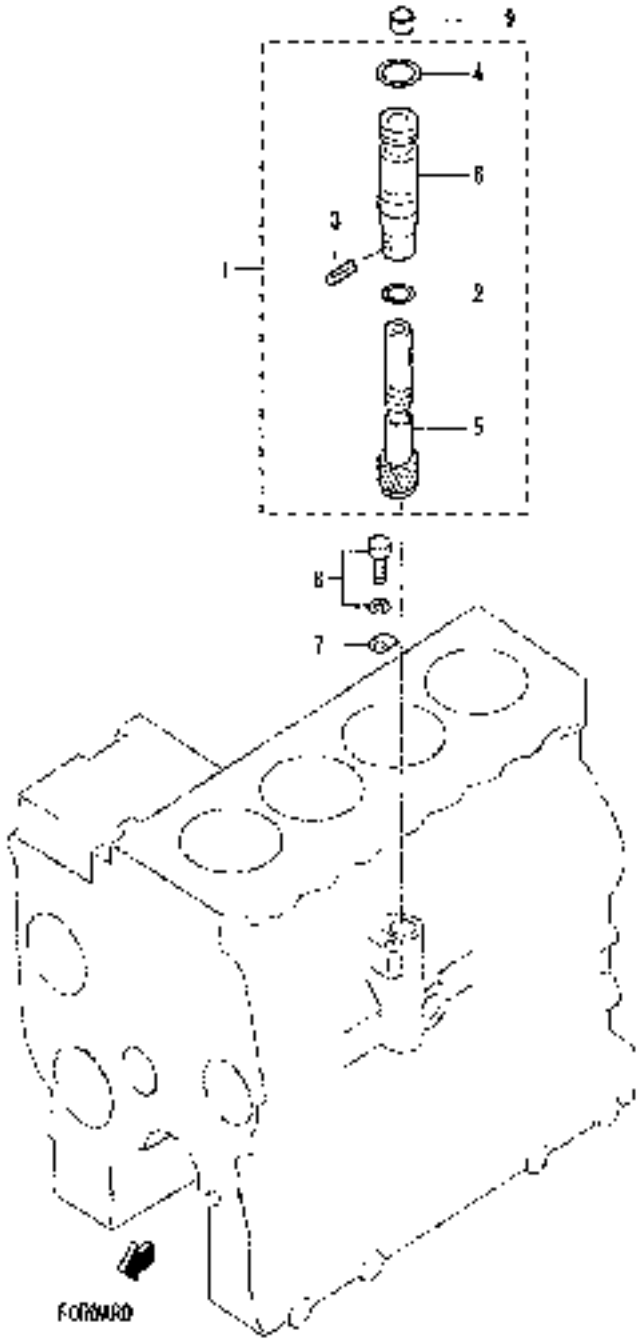

07-06-25

01

TACHO DRIVE

FIG. 27

NO	PART NO.	PART NAME & DESCRIPTION	QTY A	QTY B	QTY C	APPLIED	REM.
1	MM430-5990	DRIVENUNIT-MM430599-MH	1	1	1		
2	MD701788	O-RING	1	1	1		
3	MF472635	PIN, SPRING	1	1	1		
4	MF520012	O-RING	1	1	1		
5	*	GEAR	1	1	1		
6	MM430-41901	SLEEVE, SPEEDMETER	1	1	1		
7	MD701780	PLATE	1	1	1		
8	MF241223	BOLT W/WASHER	1	1	1		
9	*	PLUG, SHIPPING	1	1	1		

INLET SYSTEM

FIG. 30

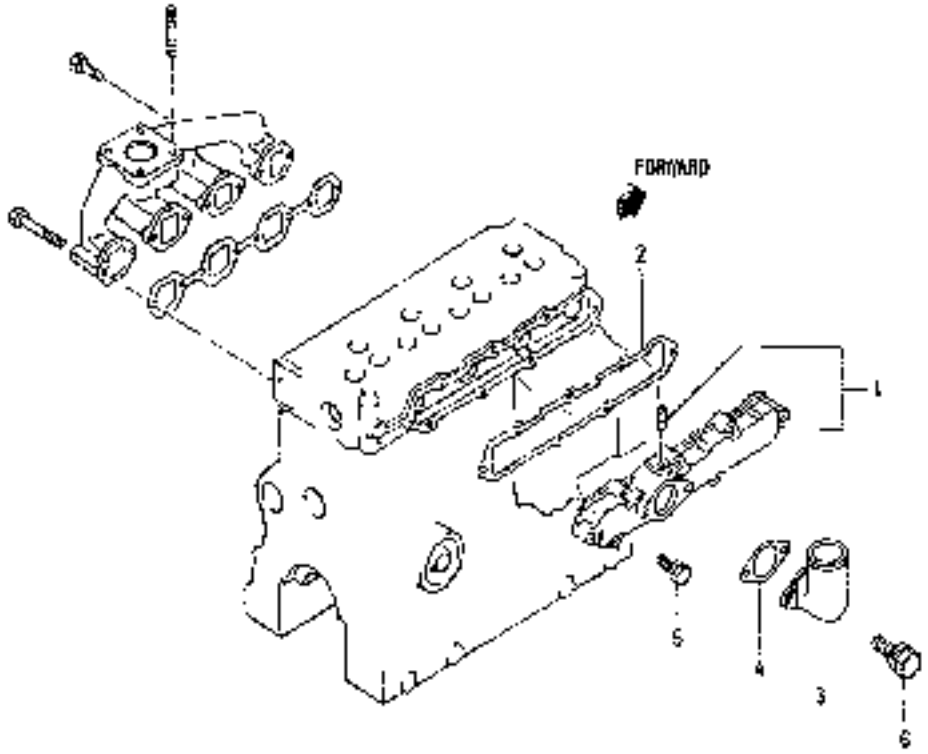

C7-06-25

01

INLET SYSTEM

FIG. 30

NO	PART NO.	PART NAME & DESCRIPTION	QTY A	QTY B	QTY C	APP.NO	REM.
1	31A30-20017	COVER ASSY, INLET	1	1	1		
2	31A30-00902	GASKET, INLET COVER	1	1	1		
3	31A30-00300	PIPE, INLET	1	1	1		
4	31A30-00901	GASKET, INLET PIPE	1	1	1		
5	MF241259	BOLT, W/WASHER	8	8	8		
6	MF241253	BOLT, W/WASHER	2	2	2		

07-06-25

01

FIG. 32

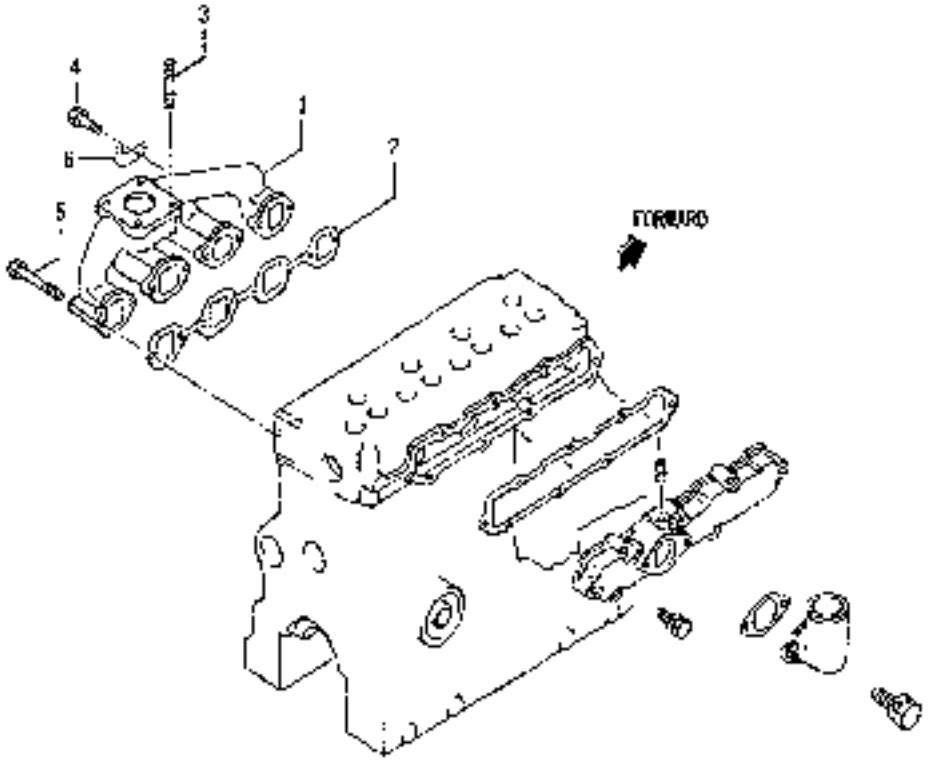

07-06-25

01

EXHAUST SYSTEM

FIG. 32

NO	PART NO	PART NAME & DESCRIPTION	QTY A	QTY B	QTY C	APP. NO	REM.
1	31A32-00402	MANIFOLD ASSY, EXH	1	1	1		
2	31A32-01200	GASKET, EXHAUST	1	1	1		
3	MF401936	STUD	4	4	4		
4	F1035-08020	BOLT	6	6	6		
5	MF101260	BOLT	2	2	2		
6	31A32-02100	CLAMP	1	1	1		

OIL PUMP

FIG. 35

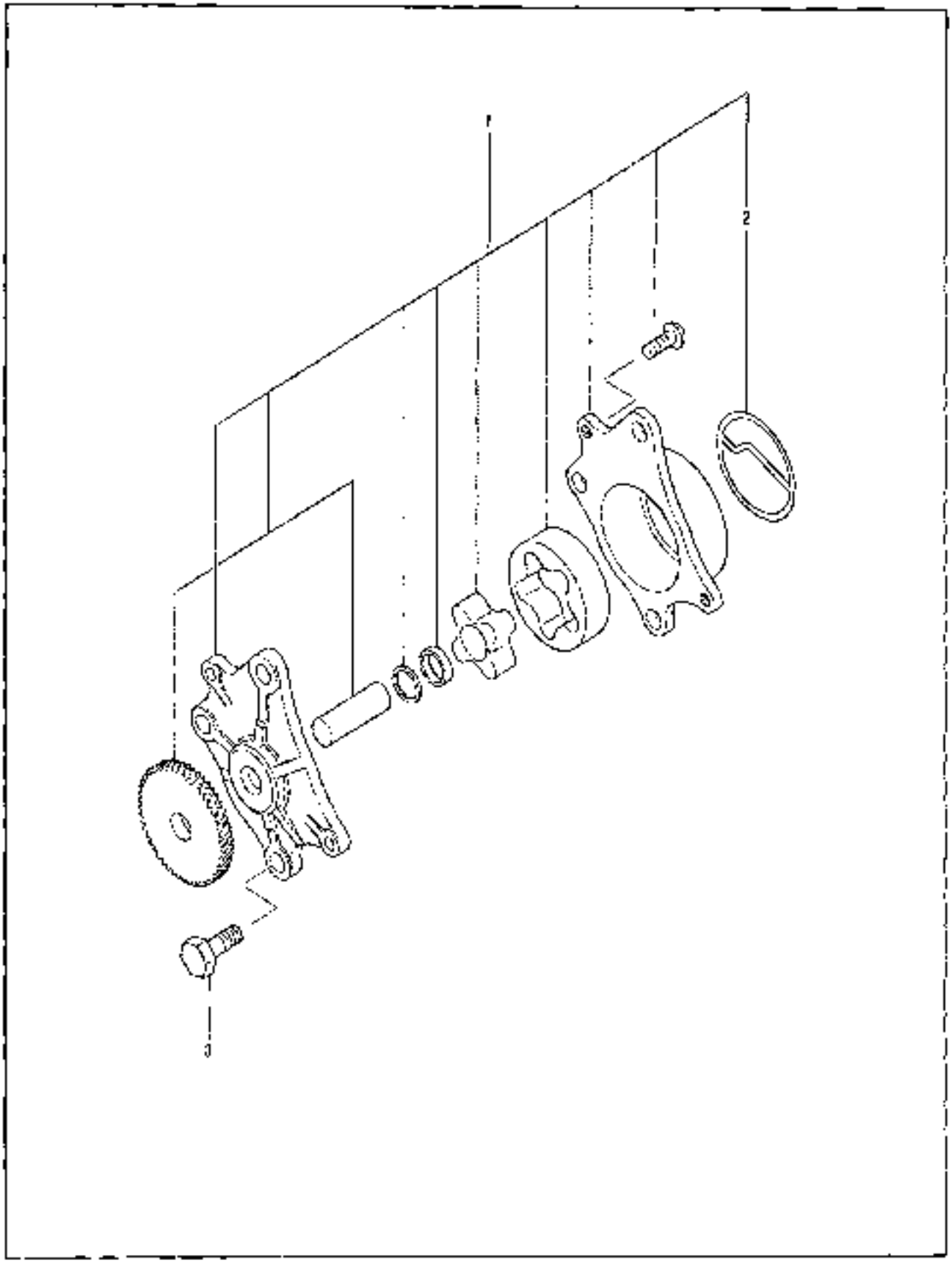

07-06-25

01

OIL PUMP

FIG. 35

NO.	PART NO	PART NAME & DESCRIPTION	QTY A	QTY B	QTY C	APP NO	REM.
1	31A35-30010	PUMP ASSY, Oil	1	1	1		
2	31A35-02300	PACKING, BODY	1	1	1		
3	T1235-08022	BOLT	3	3	3		

07-06-25

01

OIL STRAINER

FIG. 35-02

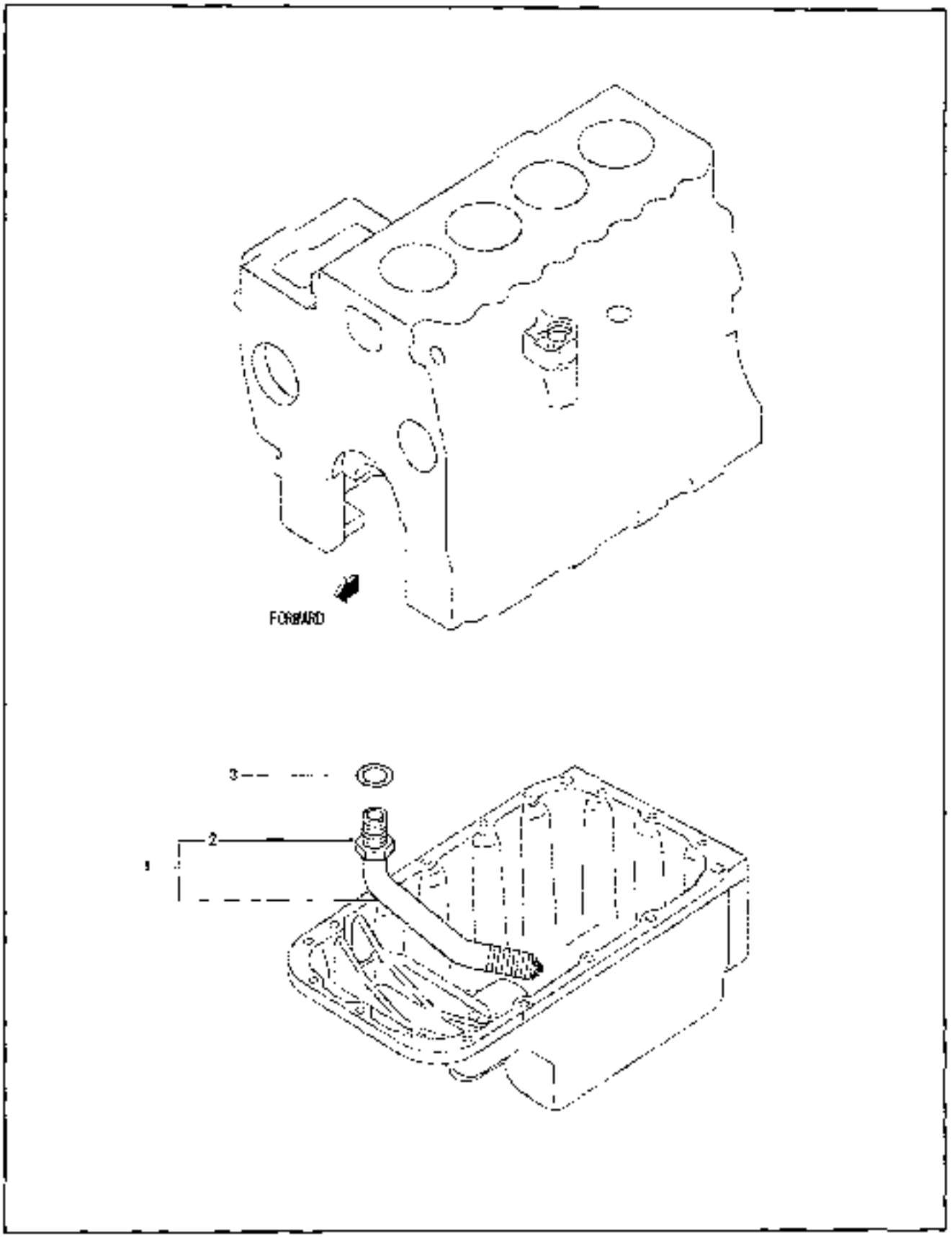

OIL STRAINER

FIG. 35-02

NO	PART NO	PART NAME & DESCRIPTION	QTY A	QTY B	QTY C	APP.NO	REV
1	31A35-05050	STRAINER ASSY	1	1	1		
2	MF430729	NUT, JAM	1	1	1		
3	MF633038	GASKET	1	1	1		

07-06-25

01

FIG. 36

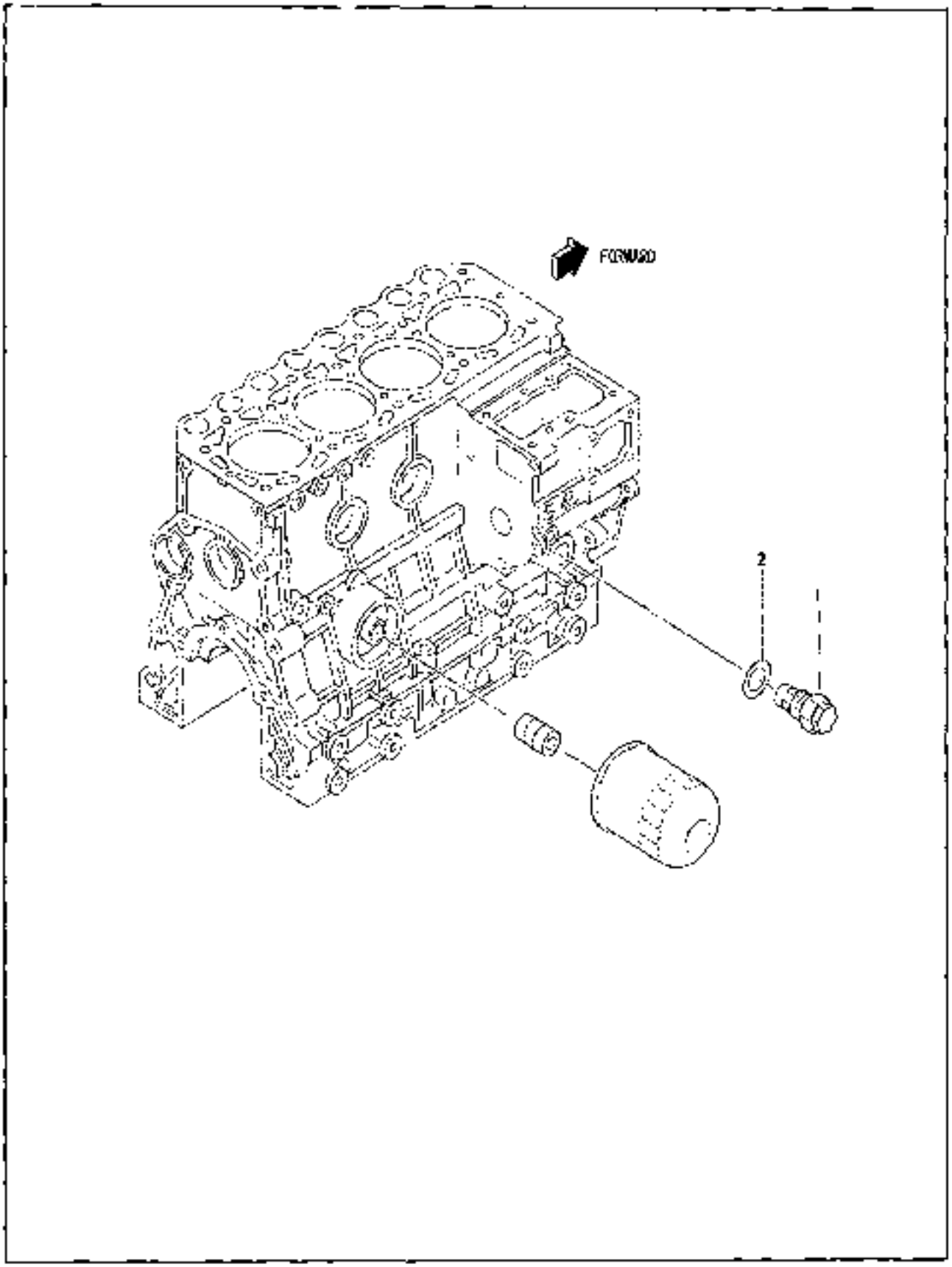

FIG. 36

NO.	PART NO.	PART NAME & DESCRIPTION	QTY A	QTY B	QTY C	APP NO	REM
1	32A38 05012	VALVE ASSY, RELIEF	1	1	1		
2	34340-03700	GASKET	1	1	1		

OIL FILTER & GAUGE

FIG. 40

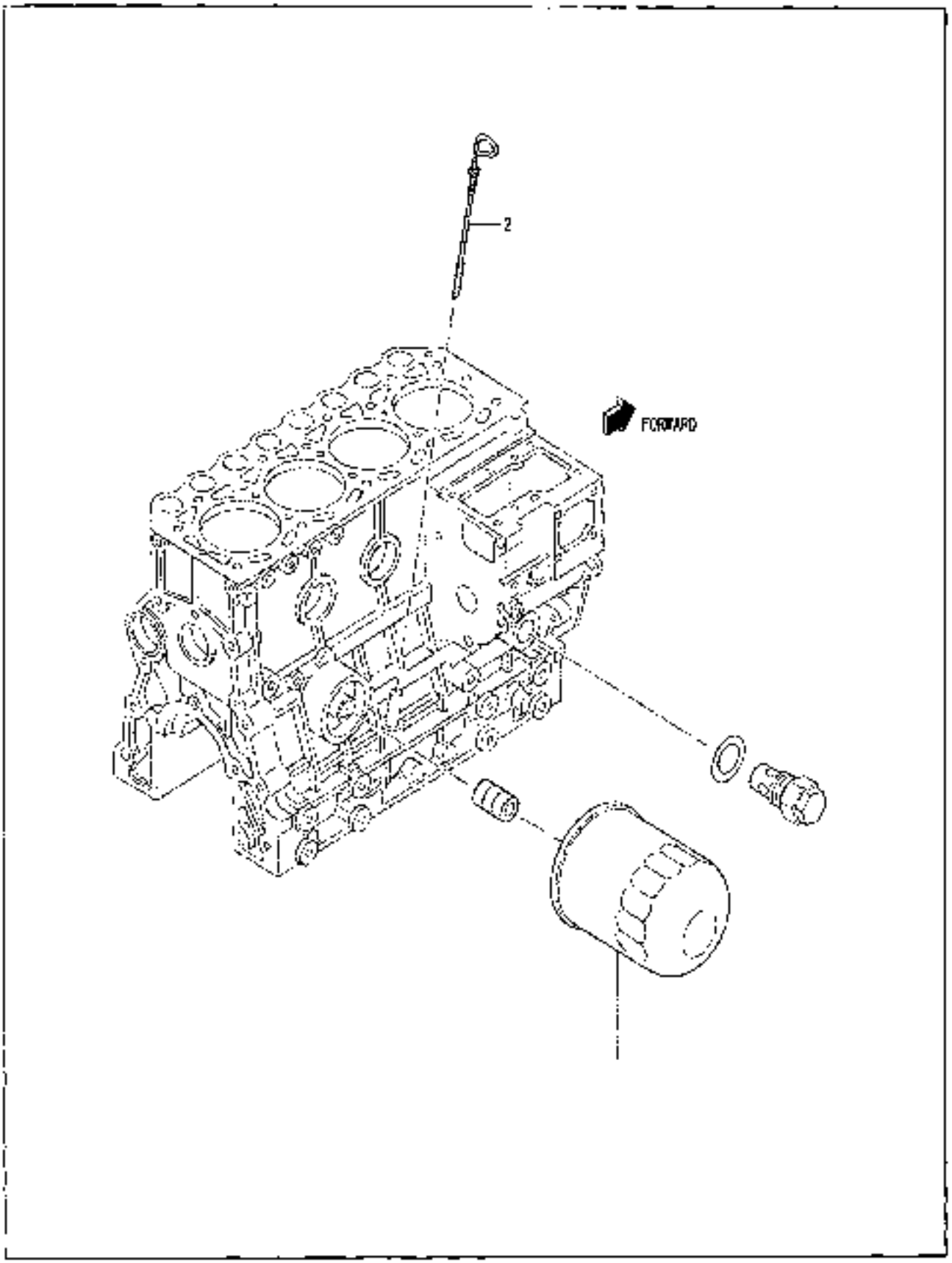

07-06-25

01

OIL FILTER & GAUGE

FIG. 40

NO.	PART NO.	PART NAME & DESCRIPTION	QTY A	QTY B	QTY C	APP.NO	REM.
1	31A40-02100	OILFILTER-MD134953-MH	1	1	1		
2	31A42-10100	GAGE, OIL LEVEL	1	1	1		

BREATHER

FIG. 43

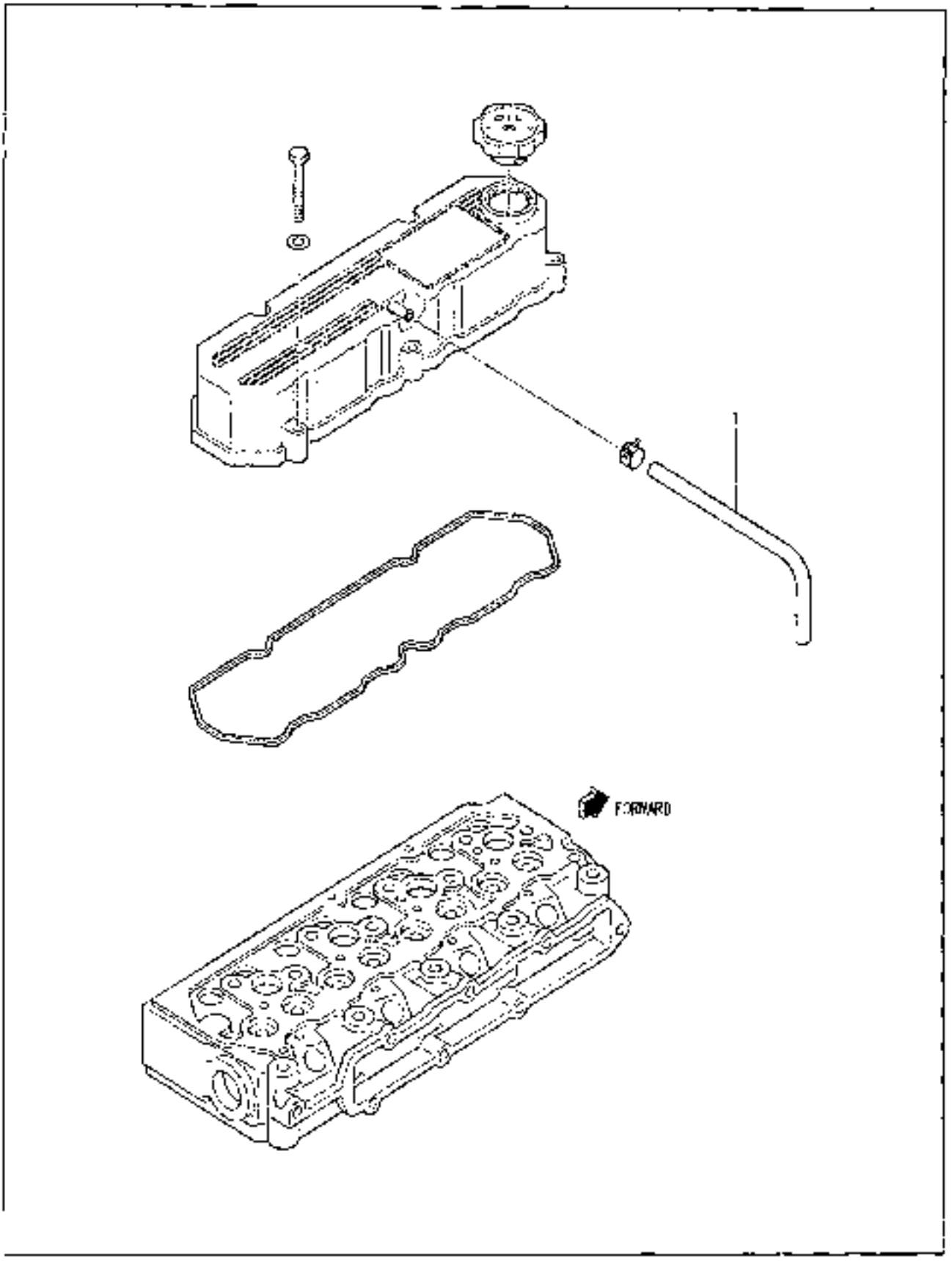

BREATHER

FIG. 43

NO.	PART NO.	PART NAME & DESCRIPTION	QTY A	QTY B	QTY C	APP. NO	REM.
1	MM400080	BREATHER, PIPE	1	1	1		

07-06-25

01

WATER PUMP & PULLEY

FIG. 45

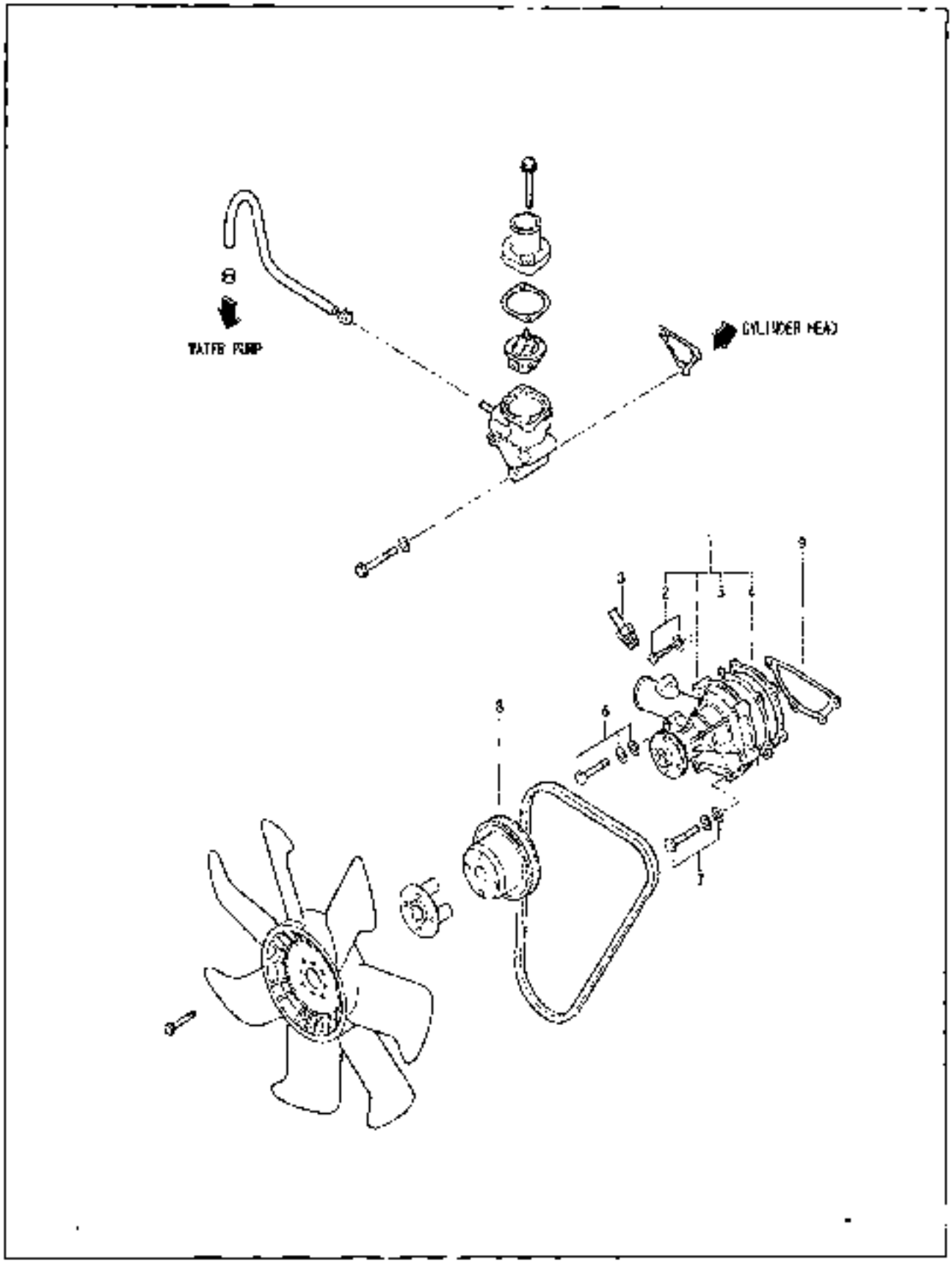

07 06-25

01

WATER PUMP & PULLEY

FIG. 45

NO	PART NO	PART NAME & DESCRIPTION	QTY A	QTY B	QTY C	APP.NO	REV.
1	MM409302	WATERPUMP MM409302 MIK	-	1	1		40052841
2	MF240031	BOLT, W/WASHER	2	2	2		
3	MM400314	JOINT-MM400314-MPJ	1	1	1		40052842
4	MM409327	PLATE, WATER PUMP	1	1	1		
5	MM409326	GASKET, WATER PUMP	1	1	1		
6	MF244060	BOLT, W/WASHER	3	3	3		
7	MF244863	BOLT, W/WASHER	1	1	1		
8	31A45 20700	PULLEY W/PUMP 89	1	1	1		
9	30H45-02101	GASKET, WATER PUMP	1	1	1		

FIG. 46

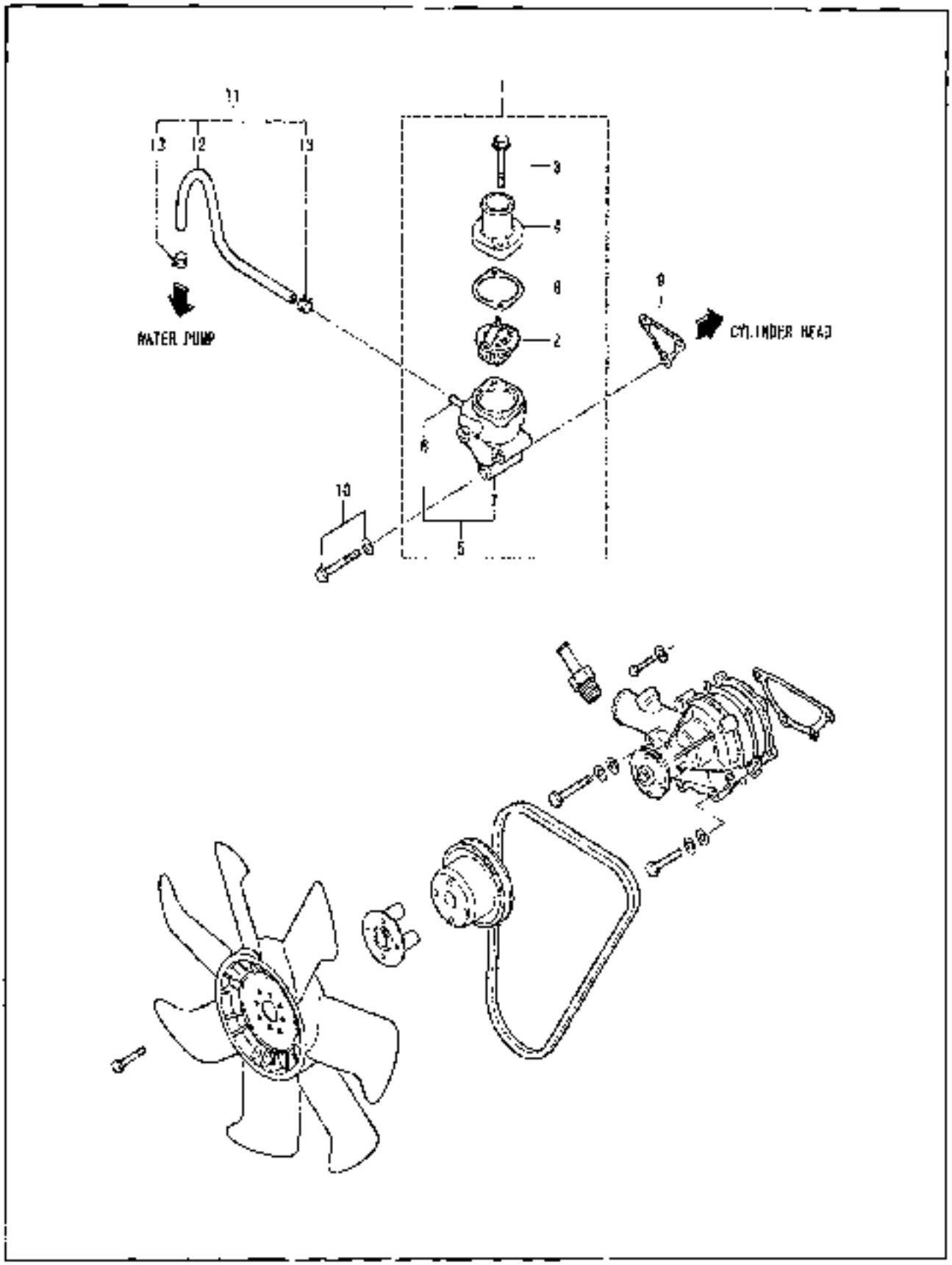

FIG. 46

NO	PART NO.	PART NAME & DESCRIPTION	QTY A	QTY B	QTY C	APP NO	SCM
1	-	THERMOSTAT ASSY	1	1	1		
2	MD001370	THERMOSTAT-MD001370 MHI	1	1	1		40055746
3	MF140227	BOLT, FLANGE	2	2	2		
4	MM409-31302	COVER, THERMOSTAT	1	1	1		
5	31A46-09004	CASE ASSY, THERMOSTAT	1	1	1		
6	-	PIPE, THERMOSTAT	1	1	1		
7	-	CASE, THERMOSTAT	1	1	1		
8	31A46-11200	GASKET, THERMOSTAT	1	1	1		
9	31A46-10101	GASKET, THERMO CASE	1	1	1		
10	MF241206	BOLT, W/WASHER	3	3	3		
11	MM413106	HOSE ASSY, FUEL	1	1	1		
12	MS603014	HOSE, FUEL	1	1	1		
13	MS660164	CLIP	2	2	2		

FAN & SPACER

FIG. 48

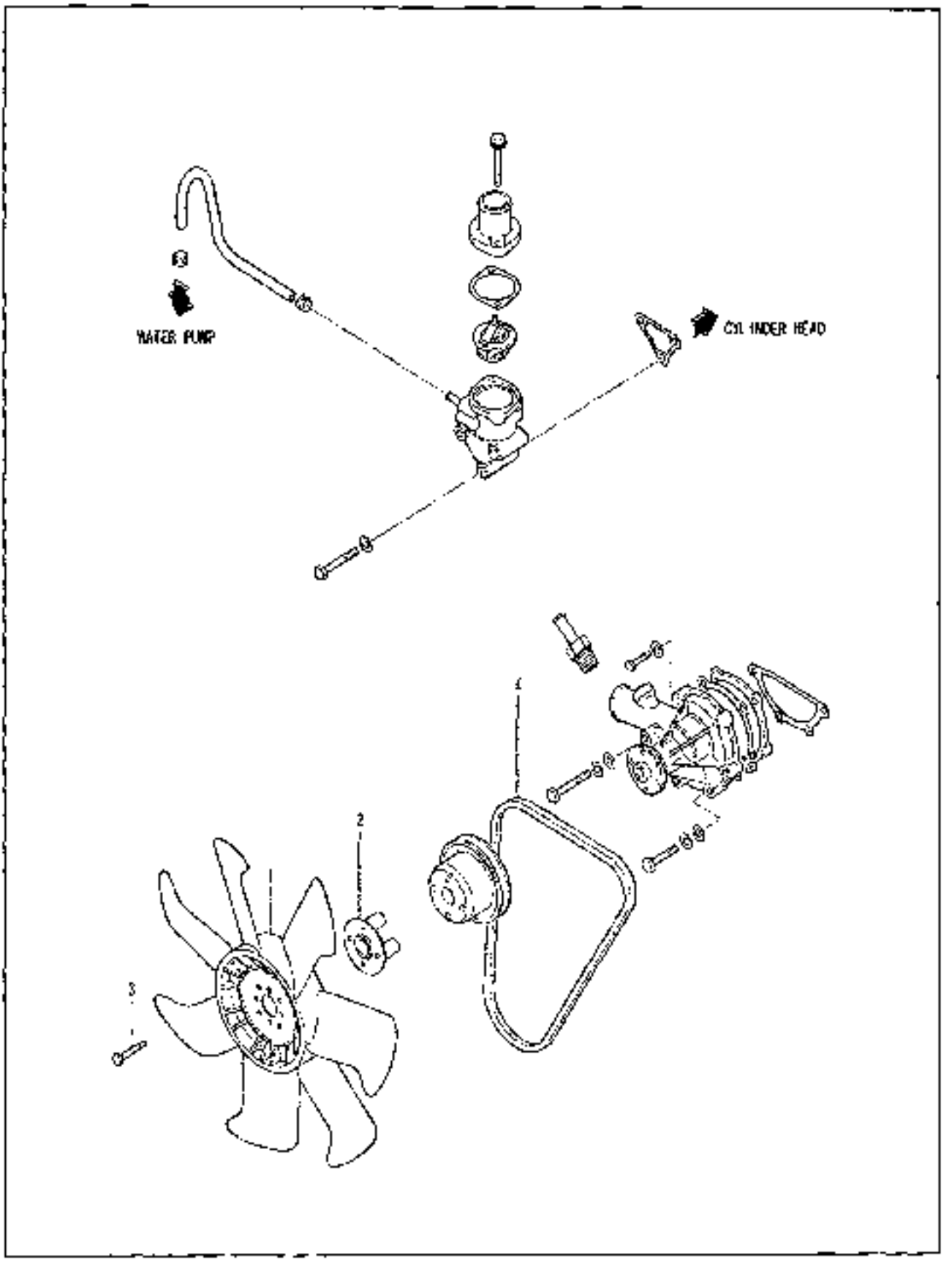

07-06-25

01

FAN & SPACER

FIG. 48

NO.	PART NO	PART NAME & DESCRIPTION		QTY A	QTY B	QTY C	APP NO	REM.
1	31A48-03200	FAN, COOLING		1	1	1		
2	31A48-01100	SPACER, FAN		2	2	2		
3	MH241242	BOLT W/WASHER		4	4	4		
4	MD041704	V-BELT-MD041704-MHI	L=990	1	1	1		40055759

FUEL PUMP

FIG. 60

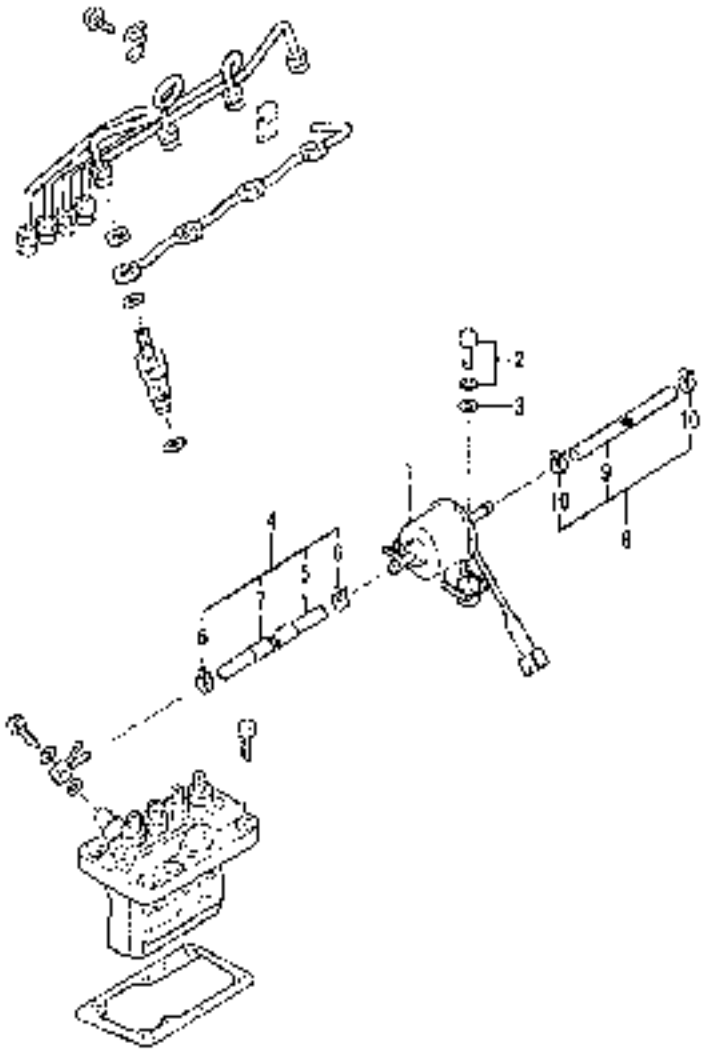

FUEL PUMP

FIG. 60

NO.	PART NO.	PART NAME & DESCRIPTION	QTY A	QTY B	QTY C	APP.NO	REV.
1	31A60-00600	PUMP, FUEL	1	1	1		
2	MF241729	BOLT, W/WASHER	2	2	2		
3	MD107509	WASHER	2	2	2		
4	*	HOSE ASSY, FUEL	1	1	1		
5	MS802035	HOSE, FUEL	1	1	1		
6	MS880103	CLIP	2	2	1		
7	31A61-01300	HOSE, RUBBER	1	1	1		
8	MM413-20501	HOSE, FUEL	1	1	1		
9	MS802063	HOSE, FUEL	1	1	1		
10	MS880103	CLIP	2	2	2		

07-06-25

01

FIG. 61-00-01

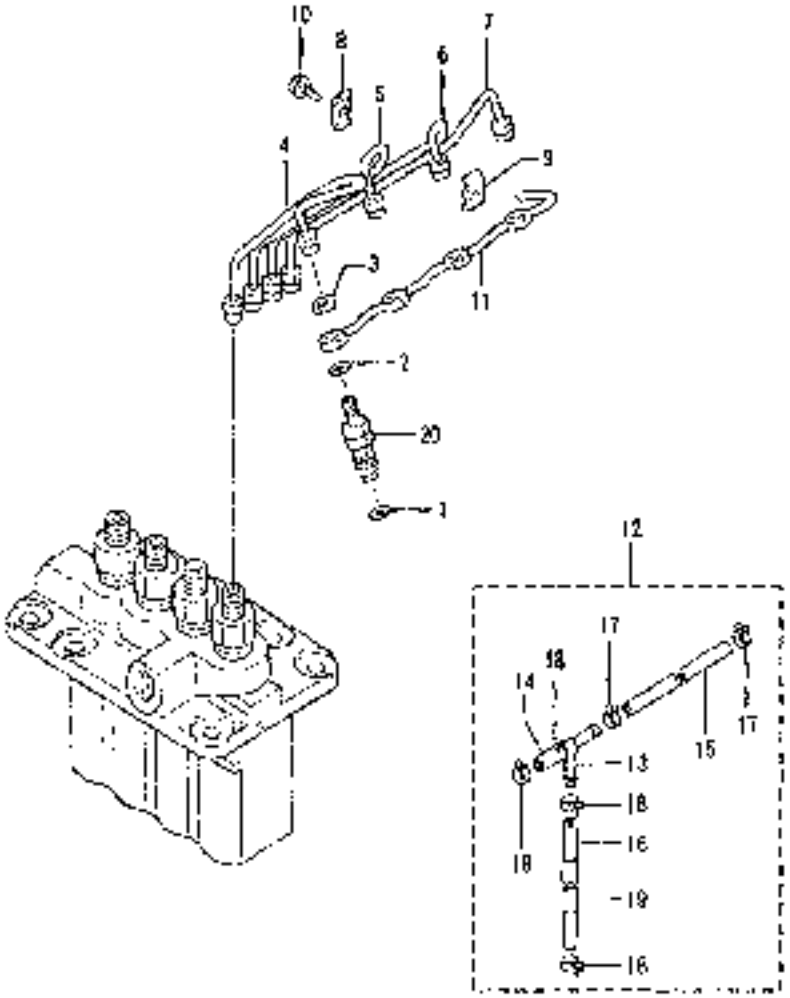

FIG. 61-00-01

NO	PART NO	PART NAME & DESCRIPTION	QTY A	QTY B	QTY C	APP.NO	REM.
1	MD070717	GASKET MD070717-MHI	4	4	4		40055776
2	MD068355	GASKET-MD068355-MHI	4	4	4		40055773
3	MD088353	NUT-MD088353-MHI	4	4	4		40055772
4	31A61-04100	PIPE, INJECTION NO.1	1	1	1		
5	31A61-04200	PIPE, INJECTION NO.2	1	1	1		
6	31A61-04300	PIPE, INJECTION NO.3	1	1	1		
7	31A61-04400	PIPE, INJECTION NO.4	1	1	1		
8	MM430703	CLAMP (A)	3	3	3		
9	MM430614	CLAMP (B)	3	3	3		
10	MF243828	BOLT, W/WASHER	3	3	3		
11	31A61-12600	PIPE, FUEL LEAK OFF	1	1	1		
12	31A61-03200	HOSE ASSY, AIR VENT	1	1	1		
13	MM400886	JOINT	1	1	1		
14	MM430132	HOSE, FUEL	1	1	1		
15	MS602063	HOSE, FUEL	1	1	1		
16	MS604043	HOSE, FUEL	1	1	1		
17	MS660163	CLIP	2	2	2		
18	MS660169	CLIP	4	4	4		
19	31A61-01200	HOSE, RUBBER	1	1	1		
20	MM433-84101	NOZZLE & HOLDER ASSY	4	4	4		

FUEL FILTER

FIG. 62

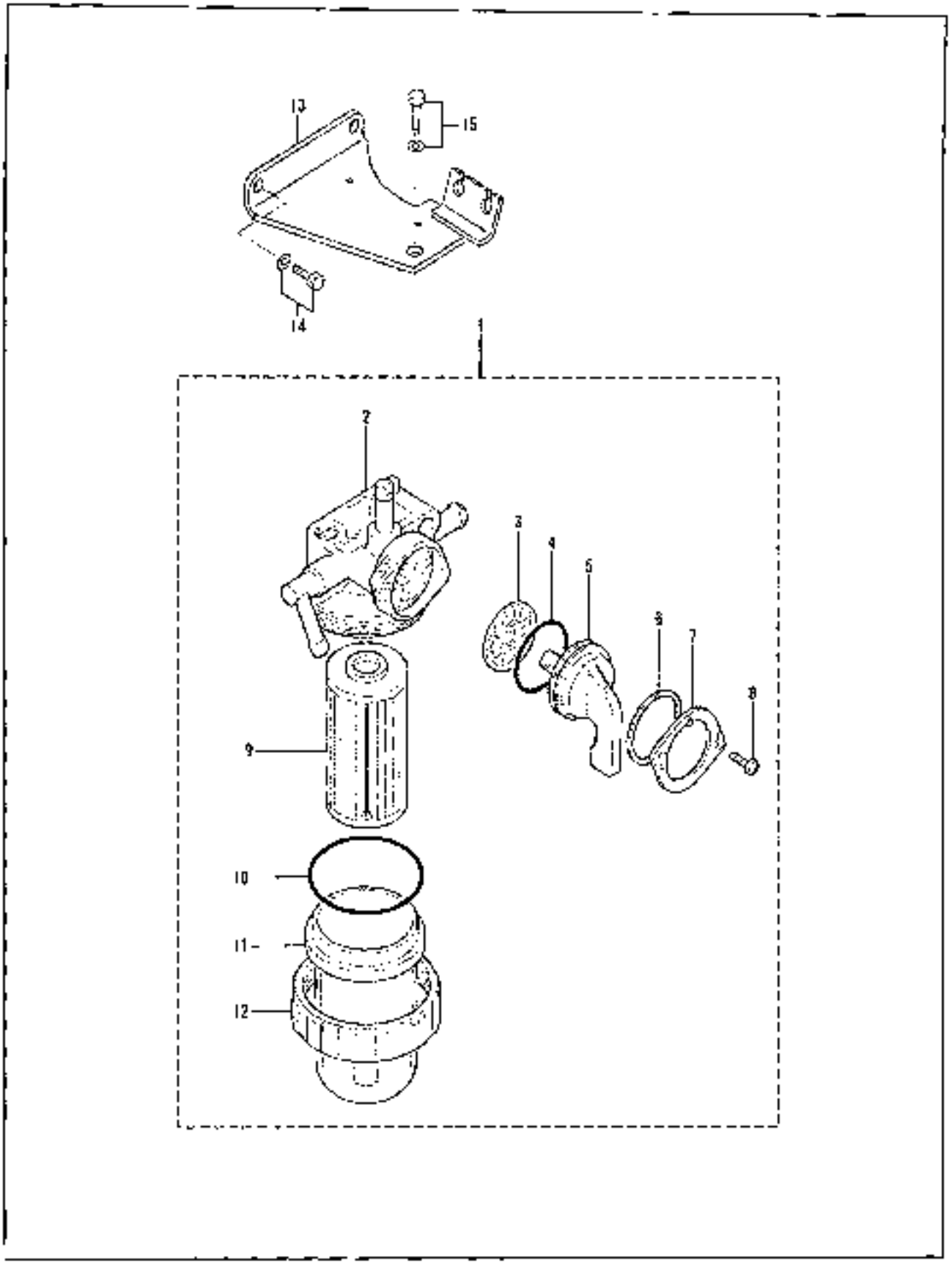

FUEL FILTER

FIG. 62

NO.	PART NO.	PART NAME & DESCRIPTION	QTY A	QTY B	QTY C	APP. NO	REM.
1	MM438739	FILTERASSYFUEL-MM438739-MHI	1	1	1		40052890
2	MM438743	BODY	1	1	1		
3	MM438748	PACKING, VALVE	1	1	1		
4	MM409868	O-RING, VALVE	1	1	1		
5	MM438747	LEVER	1	1	1		
6	MM409864	WASHER, WAVE	1	1	1		
7	MM409865	PLATE, LEVER	1	1	1		
8	MF200003	SCREW	2	2	2		
9	MM320 88801	ELEMENT	1	1	1		
10	MM409859	O-RING	1	1	1		
11	MM320881	BODYSUBASSY-MM320881-MAM	1	1	1		40055396
12	MM409868	NUTRING-MM409868-MHI	1	1	1		40052846
13	31A62-21101	BRACKET, FUEL FILTER	1	1	1		
14	MF240051	BOLT, W/WASHER	2	2	2		
15	MF240090	BOLT, W/WASHER	1	1	1		

07 06 25

01

GOVERNOR

FIG. 63-00-01A

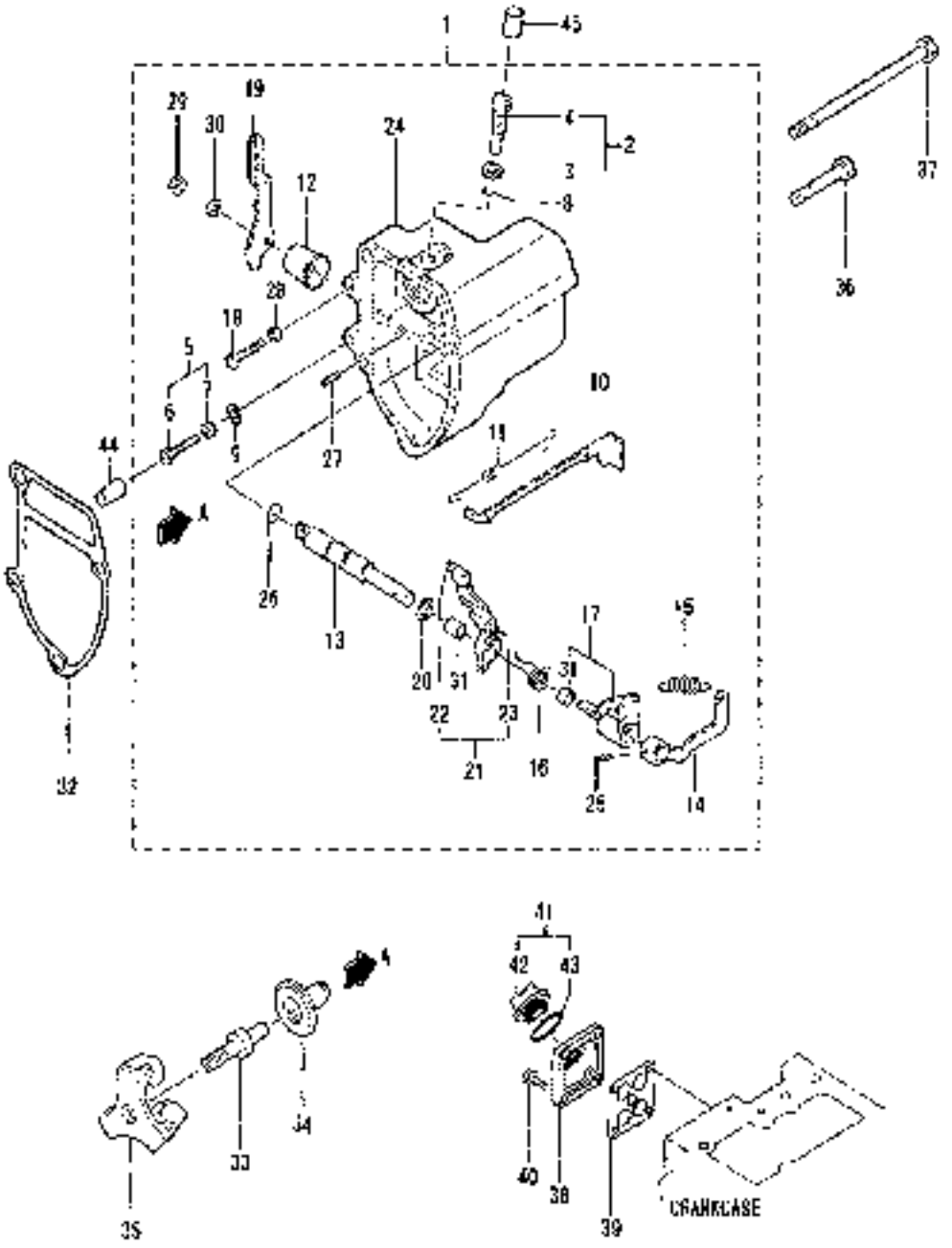

FIG. 63-00-01A

NO.	PART NO.	PART NAME & DESCRIPTION	QTY A	QTY B	QTY C	APP. NO	REM.
1	31A63-13050	CASE ASSY, GOVERNOR	1	*	*		
2	*	SCREW ASSY, RACK SET	1	*	*		
3	*	NUT, TORQUE SET	1	*	*		
4	*	SCREW, RACK SET	1	1	*		
5	*	BOLT ASSY, HIGH SPEED	1	1	*		
6	*	BOLT, HIGH SPEED SET	1	*	*		
7	*	NUT, HIGH SPEED SET	1	1	*		
8	*	O-RING, TORQUE SET	1	1	*		
9	*	O-RING, HIGH SPEED SET	1	*	*		
10	*	TIE-ROD	1	*	*		
11	*	SPRING, TIE-ROD	1	1	*		
12	*	COVER, GOVERNOR SHAFT	1	*	*		
13	*	SHAFT, GOVERNOR	1	1	*		
14	*	LEVER, GOVERNOR	1	*	*		
15	*	SPRING, GOVERNOR	1	1	*		
16	*	SPRING, START	1	1	*		
17	*	LEVER, TENSION	1	1	*		
18	*	BOLT, LOW IDLE SET	1	1	*		
19	*	LEVER, SPEED CONTROL	1	1	*		
20	*	SHIM, GOVERNOR SHAFT	1	1	*		
21	*	LEVER, GOVERNOR	1	1	*		
22	*	PIN, GROOVED	1	1	*		
23	*	PIN, GROOVED	1	*	*		
24	*	CASE, GOVERNOR	1	1	*		
25	*	PIN, SPRING	1	1	*		
26	*	O-RING	1	1	*		
27	*	PIN, GROOVED	1	1	*		
28	*	NUT	1	1	*		
29	*	NUT, JAM	1	1	*		
30	*	WASHER, SPRING	1	1	*		
31	*	BEARING, NEEDLE	1	1	*		
32	31A63-12201	GASKET, GOVERNOR	1	1	*		
33	31A63-13305	SHAFT, SLIDING	1	1	*		
34	31A63-20001	SLEEVE, SLIDING	1	1	*		
35	31A63-11361	WEIGHT ASSY, GOVERNOR	1	1	*		
36	MF100064	BOLT	3	3	*		
37	31A63-02300	BOLT, GOVERNOR	1	1	*		
38	MM435289	OIL INLET	1	1	*		
39	MM435219	PROTECTOR, OIL INLET	1	1	*		40052879
40	MF241226	BOLT W/WASHER	4	4	*		
41	30H42-04020	CAP ASSY, OIL FILLER	1	1	*		
42	*	CAP, OIL FILLER	1	1	*		
43	MF520402	O-RING	1	1	*		
44	30L63-02400	COVER, HIGHT SPEED	1	1	*		
45	30L63-00300	COVER, TORQUE SET	1	1	*		

GOVERNOR

FIG. 63-00-02B

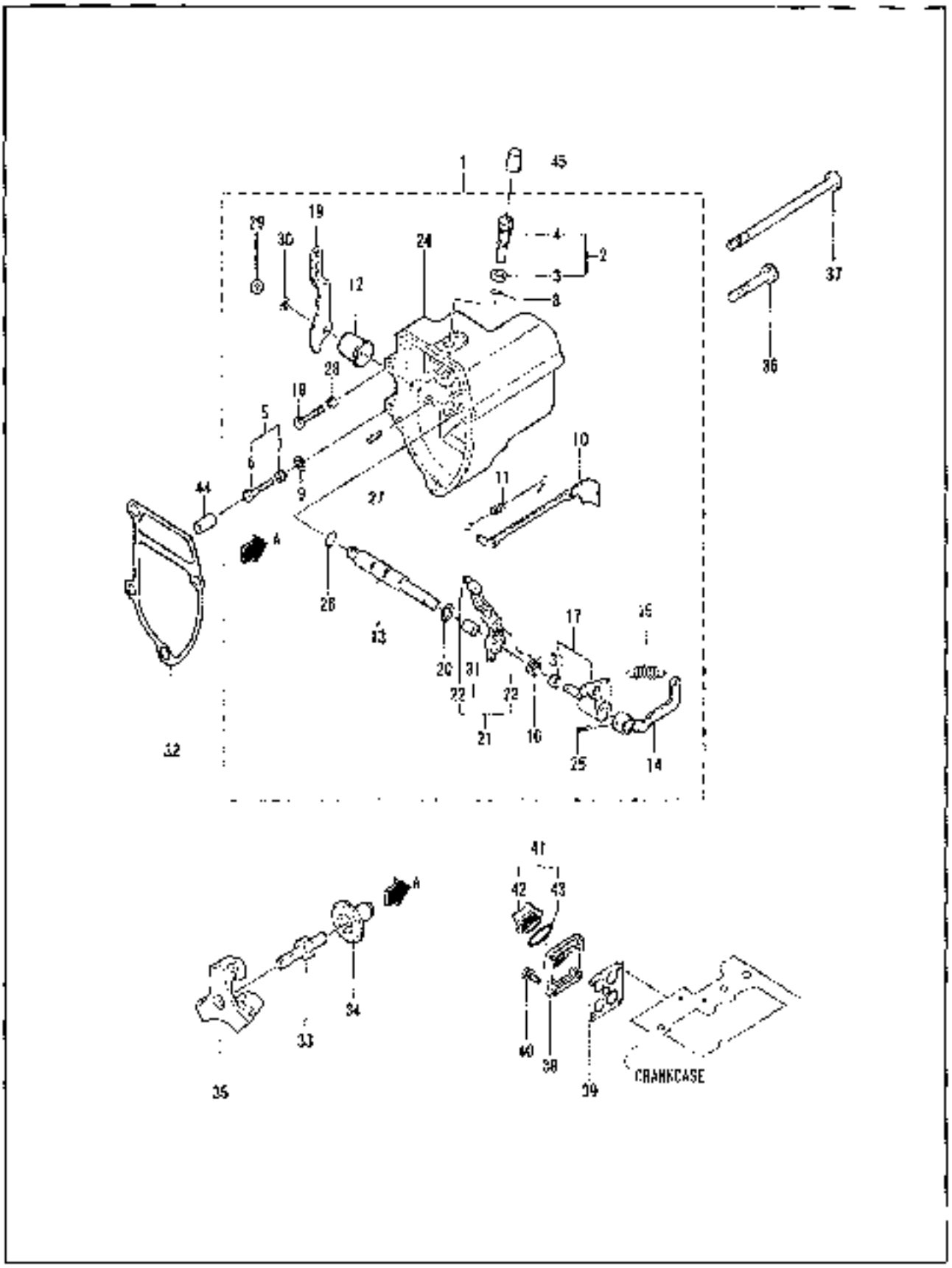

FIG. 63-00-02B

NO	PART NO	PART NAME & DESCRIPTION	QTY A	QTY B	QTY C	APP. NO	REM.
1	31A63-00070	CASE ASSY, GOVERNOR	*	*	1		
2	*	SCREW ASSY, RACK SET	*	*	1		
3	*	NUT, TORQUE SET	*	*	1		
4	*	SCREW, RACK SET	*	*	1		
5	*	BOLT ASSY, HIGH SPEED	*	*	2		
6	*	BOLT, HIGH SPEED SET	*	*	1		
7	*	NUT, HIGH SPEED SET	*	*	1		
8	*	O-RING, TORQUE SET	*	*	1		
9	*	O-RING, HIGH SPEED SET	*	*	1		
10	*	TIE-ROD	*	*	1		
11	*	SPRING, TIE-ROD	*	*	1		
12	*	COVER, GOVERNOR SHAFT	*	*	1		
13	*	SHAFT, GOVERNOR	*	*	1		
14	*	LEVER, GOV. SPRING	*	*	1		
15	*	SPRING, GOVERNOR	*	*	1		
16	*	SPRING, START	*	*	1		
17	*	LEVER, TENSION	*	*	1		
18	*	BOLT, LOW IDLE SET	*	*	1		
19	*	LEVER, SPEED	*	*	1		
20	*	SLIM, GOVERNOR SHAFT	*	*	1		
21	*	LEVER, GOVERNOR	*	*	1		
22	*	PIN, GROOVED	*	*	1		
23	*	PIN, GROOVED	*	*	1		
24	*	CASE, GOVERNOR	*	*	1		
25	*	PIN, SPRING	*	*	1		
26	*	O-RING	*	*	1		
27	*	PIN, GROOVED	*	*	1		
28	*	NUT	*	*	1		
29	*	NUT, JAM	*	*	1		
30	*	WASHER, SPRING	*	*	1		
31	*	BEARING, NEEDLE	*	*	1		
32	31A63-12201	GASKET, GOVERNOR	*	*	1		
33	31A63-10605	SHAFT, SLIDING	*	*	1		
34	31A63-20201	SLEEVE, SLIDING	*	*	1		
35	31A63-11067	WEIGHT ASSY, GOVERNOR	*	*	*		
36	MF100064	BOLT	*	*	3		
37	31A63-02300	BOLT, GOVERNOR CASE	*	*	1		
38	MM433798	BOLT W/WASHER	*	*	1		
39	MM435249	NUT	*	*	1		
40	MF241226	SCREW, ADJUSTING	*	*	4		
41	30H42-04020	CAP ASSY, OIL FILLER	*	*	1		
42	*	CAP, OIL FILLER	*	*	1		
43	MF520402	O-RING	*	*	1		
44	30L63-07400	COVER, HIGH SPEED	*	*	1		
45	30L63-00800	COVER, TORQUE SET	*	*	*		

INJECTION PUMP

FIG. 65-00-01

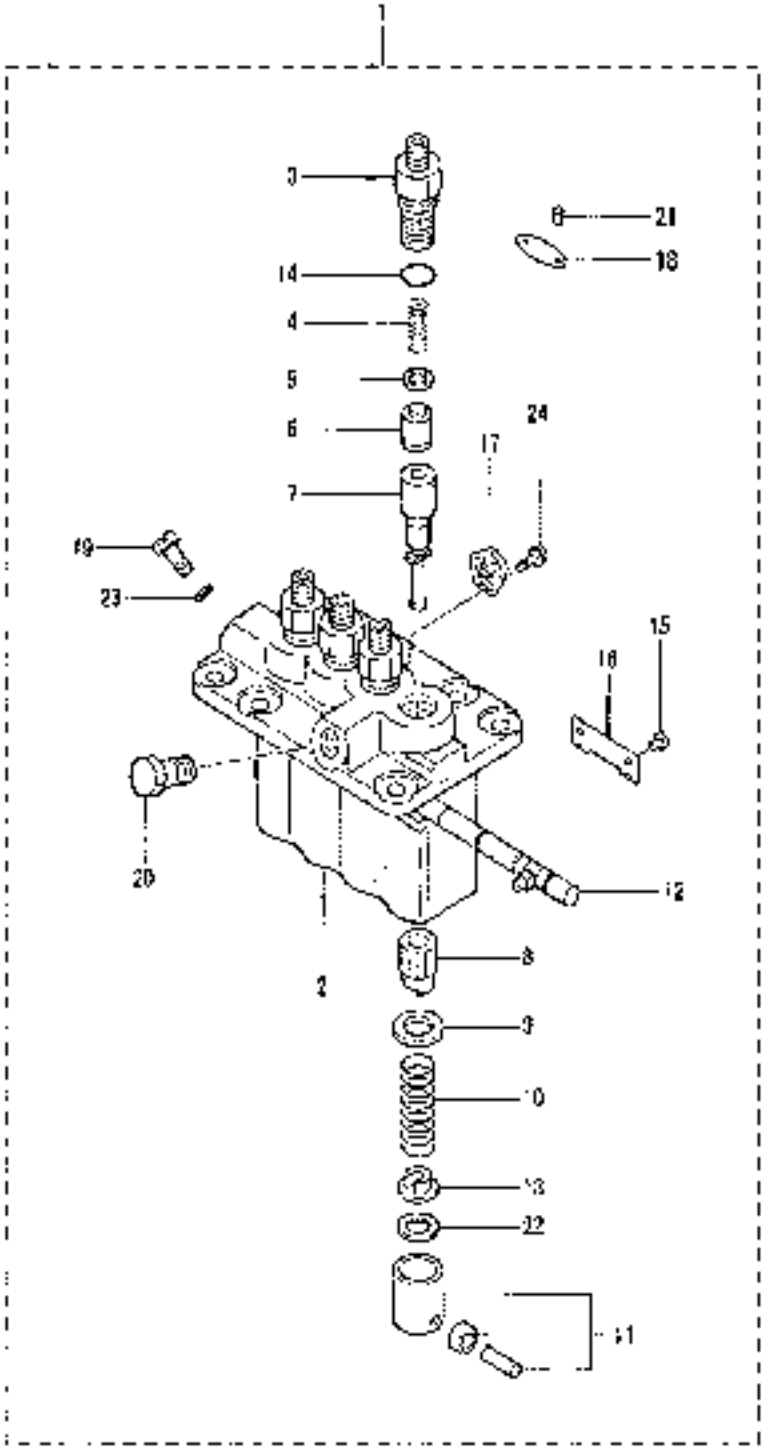

FIG. 65-00-01

NO	PART NO	PART NAME & DESCRIPTION		QTY A	QTY B	QTY C	APP NO	RFM
1	31A65-04090	PUMP ASSY, FUEL INJ		1	1	1		
	31A65-21041	PUMP ASSY, FUEL INJ		1	1	1		
2	47X01-04200	HOUSING SUB ASSY		1	1	1		
3	[illegible]	HOLDER, DELIVERY		4	4	4		
4	MM501161	SPRING, DELIVERY		4	4	1		
	MM501385	SPRING, DELIVERY		1	1	4		
5	MM501656	GASKET, DELIVERY		4	4	4		
6	47X01-04300	VALVE SUB ASSY		4	4	1		
	47X01-07700	VALVE SUB ASSY		1	1	4		
7	47X01-04400	ELEMENT SUB ASSY		4	4	4		
8	MM500229	SLEEVE, CONTROL		4	4	4		
9	MM501098	SEAT, SPRING		4	4	4		
10	MM500380	SPRING, PLUNGER		4	4	4		
11	MM500230	TAPPET SUB ASSY		4	4	4		
12	MM501755	RACK ASSY, CONTROL		1	1	1		
13	MM500318	SEAT, SPRING		4	4	4		
14	MM500438	O-RING		4	4	4		
15	MM500231	PIN, TAPPET GUIDE		4	4	4		
16	MM510732	PLATE		2	2	2		
17	MM514108	PLATE, ADJUSING		3	3	3		
18	47X01-05700	NAME PLATE		1	1	1		
19	MM501152	SCREW, AIR BLEEDER		1	1	1		
20	MM510108	SCREW, HOLLOW		1	1	1		
21	MM500429	RIVET, SERRATION		2	2	2		
22	MM500298	SHIM	T=0.60	AR	AR	AR		
	MM500309	SHIM	T=0.20	AR	AR	AR		
	MM500310	SHIM	T=0.30	AR	AR	AR		
	MM500311	SHIM	T=0.40	AR	AR	AR		
	MM500312	SHIM	T=0.50	AR	AR	AR		
	MM500314	SHIM	T=0.25	AR	AR	AR		
	MM500315	SHIM	T=0.35	AR	AR	AR		
	MM501246	SHIM	T=0.45	AR	AR	AR		
	MM501364	SHIM	T=0.55	AR	AR	AR		
	MM501365	SHIM	T=0.65	AR	AR	AR		
23	MM500578	WASHER, PIPE JOINT		1	1	1		
24	MM514195	BOLT, WASHER HEAD		3	3	3		

FIG. 65-00-02

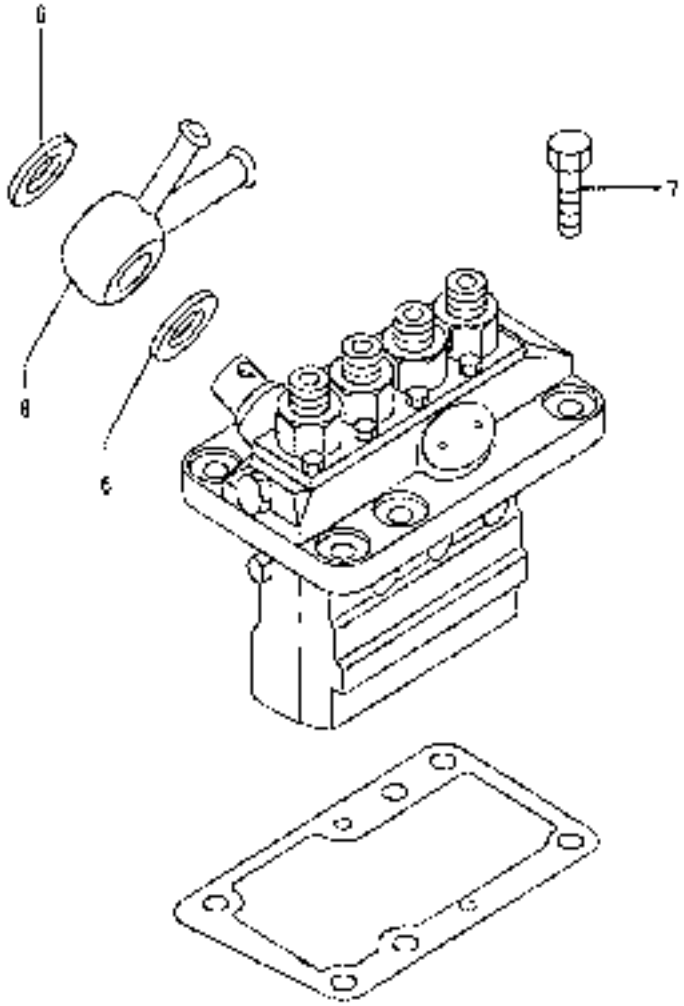

I-5

FIG. 65-00-02

NO.	PART NO.	PART NAME & DESCRIPTION		QTY A	QTY B	QTY C	APP NO	REM.
1	MM409033	SHIM	T=0.7	1	1	1		
2	MM409037	SHIM	T=0.9	1	1	1		
3	MM409039	SHIM	T=0.9	1	1	1		
4	MM409031	SHIM	T=1.0	1	1	1		
5	MM409031	SHIM	T=0.2	1	1	1		
6	MK651-14000	WASHER, SEAL		2	2	2		
7	MF100055	BOLT		6	6	6		
8	31A65-00500	COLOR, UNION		1	1	1		

07-06-25

01

FIG. 65-02

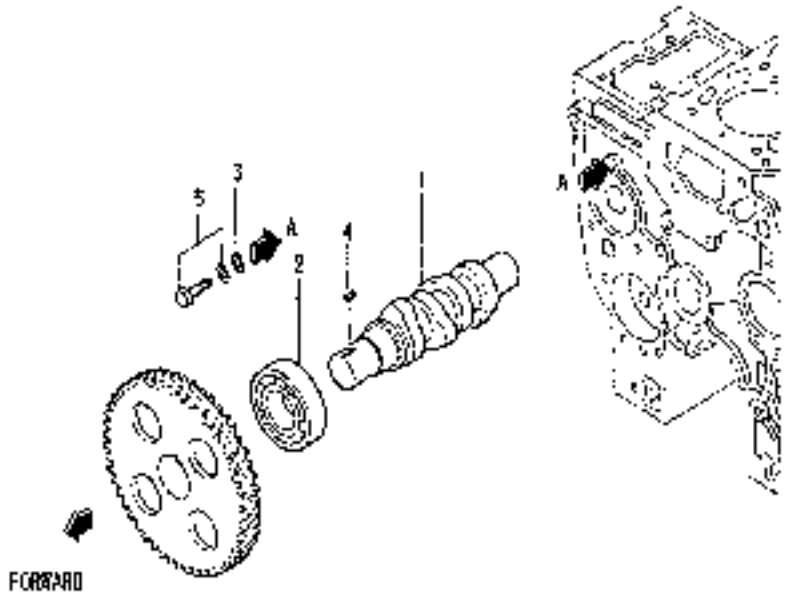

07-06-25

FIG. 65-02

NO.	PART NO	PART NAME & DESCRIPTION	QTY A	QTY B	QTY C	APP NO	REM
1	31A05-11200	SHAFT, FUEL INJ PUMP	1	1	1		
2	MD703856	BEARING, RADIAL BALL	1	1	1		
3	MD000425	WASHER	1	1	1		
4	MF470018	KEY, SUNK	1	1	1		
5	MF241251	BOLT, W/WASHER	1	1	1		

07-06-25

01

FIG. 66-01

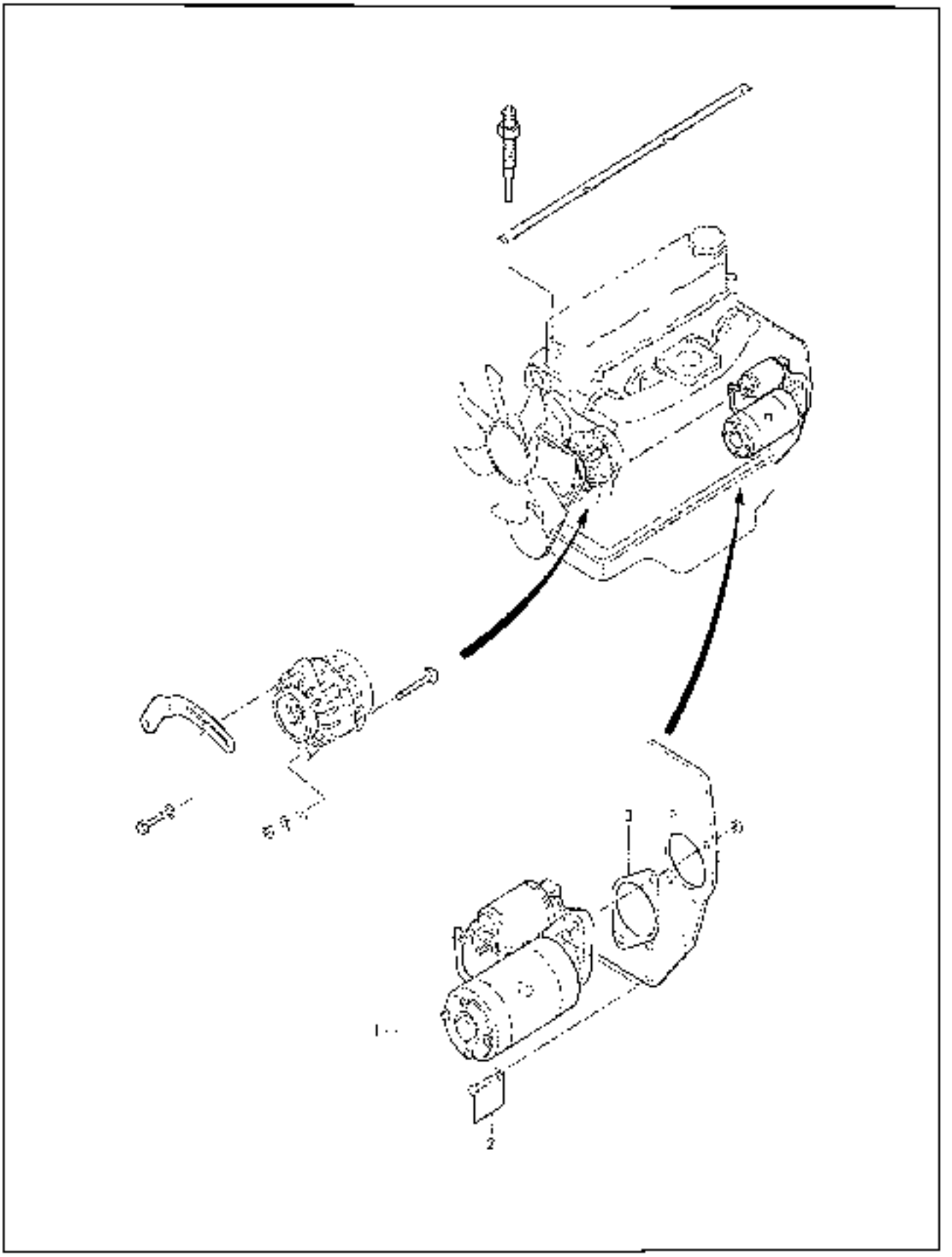

FIG. 66-01

NO.	PART NO	PART NAME & DESCRIPTION	QTY A	QTY B	QTY C	APP NO	REM.
1	31A66-00102	STARTER SEE GM 66-0046	1	1	1		
2	MF241282	BOLT, W/WASHER	2	2	2		
3	30A66-00100	GASKET, STARTER	1	1	1		

07-06-25

01

GLOW PLUG

FIG. 66-02

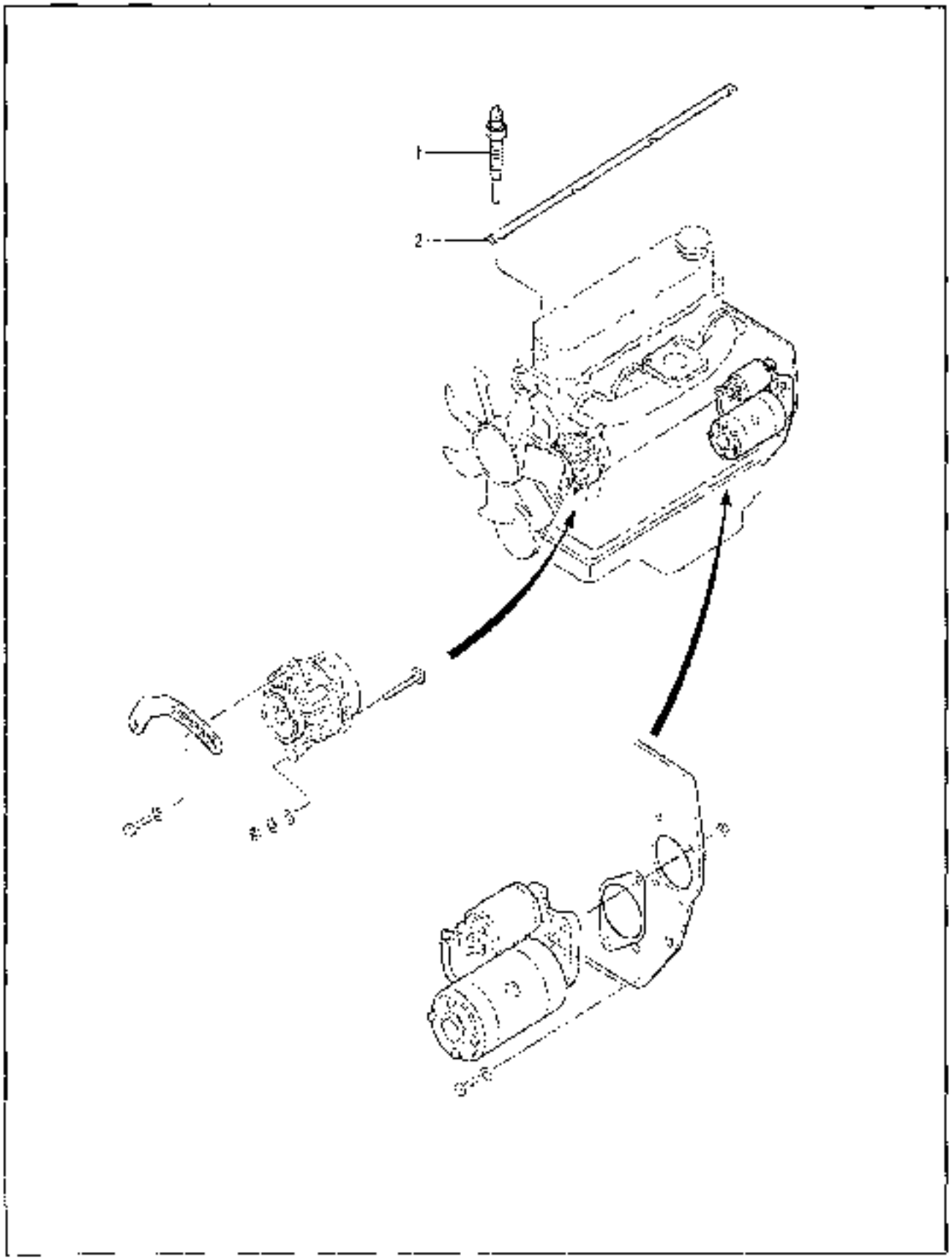

07-06-25

01

GLOW PLUG

FIG. 66-02

NO.	PART NO	PART NAME & DESCRIPTION	QTY A	QTY B	QTY C	APP NO	RIM
1	32A66-03100	PLUG, GLOW	4	4	4		
2	31A66-04101	PLATE, CONNECTION	1	1	1		

07-06-25

01

ALTERNATOR

FIG. 68-01

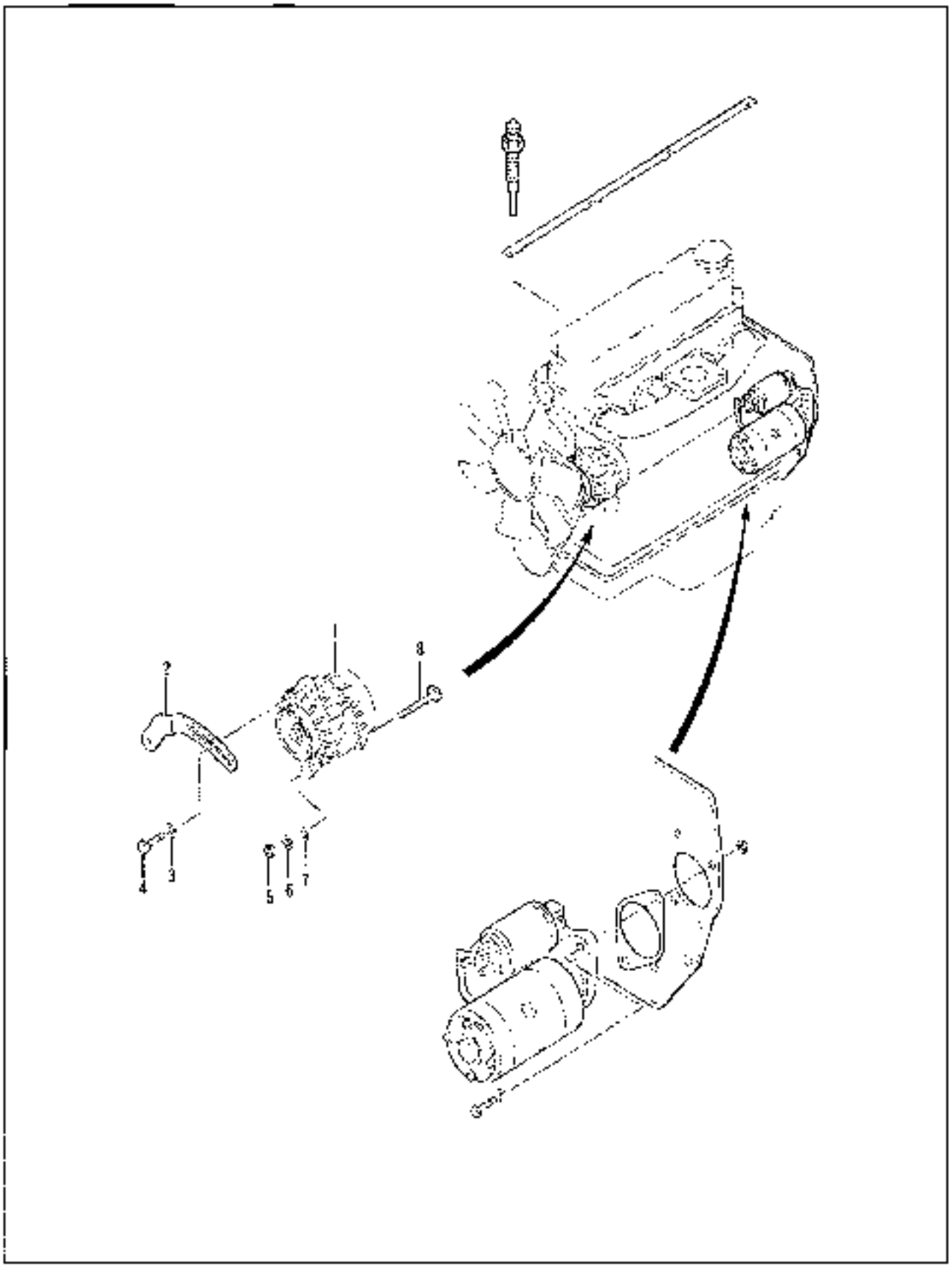

07-06-25

01

FIG. 68-01

NO	PART NO	PART NAME & DESCRIPTION	QTY A	QTY B	QTY C	APP NO	REM
1	31A28-00402	ALTERNATOR ASSY	1	1	1		
2	31A68-02100	PLATE, ADJUSTING	1	1	1		
3	MD301521	WASHER	1	1	1		
4	MF140026	BOLT, FLANGE	1	1	1		
5	MF430006	NUT	1	1	1		
6	MF450406	WASHER, SPRING	1	1	1		
7	MF450006	WASHER, PLAIN	1	1	1		
8	31A68-02300	BOLT, ALTERNATOR	1	1	1		

07-06-25

01

FIG. 87

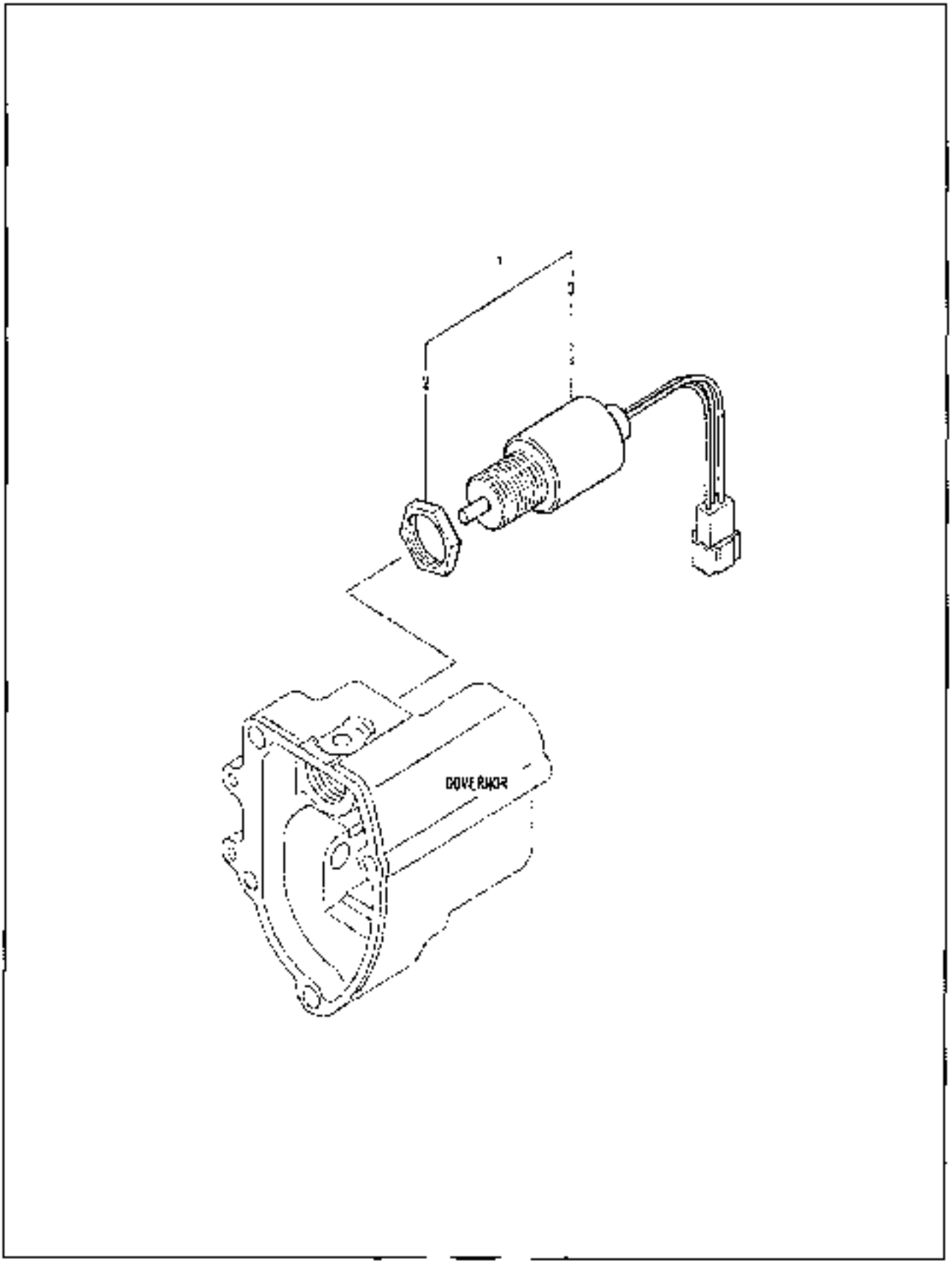

FIG. 87

NO.	PART NO	PART NAME & DESCRIPTION	QTY A	QTY B	QTY C	APP NO	REM
1	30A67-10042	SOLENOID & NUT SET	1	1	1		
2	MM408671	NUT	1	1	1		
3	30A37-23402	SOLENOID ASSY	1	1	1		

07-06-25

01

FIG. 90

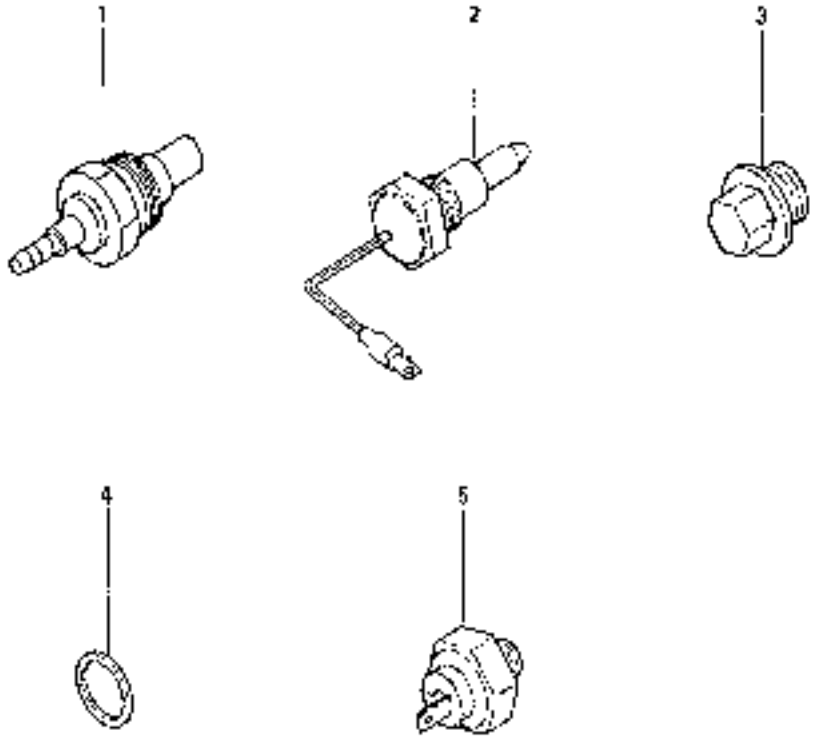

07-06-25

01

FIG. 90

NO.	PART NO.	PART NAME & DESCRIPTION	QTY A	QTY B	QTY C	APP NO	REM.
1	MM455-13302	UNIT, WATER TEMP	1	1	1		
2	30L46-02700	THERMOSWITCH	-	-	1		
3	MM316246	PLUG, DRAIN	2	2	2		
4	05146-01601	WASHER, SEALING	2	2	2		
5	31A90-00300	SWITCH, OIL	1	1	1		

OVERHAUL GASKET KIT

FIG. 94

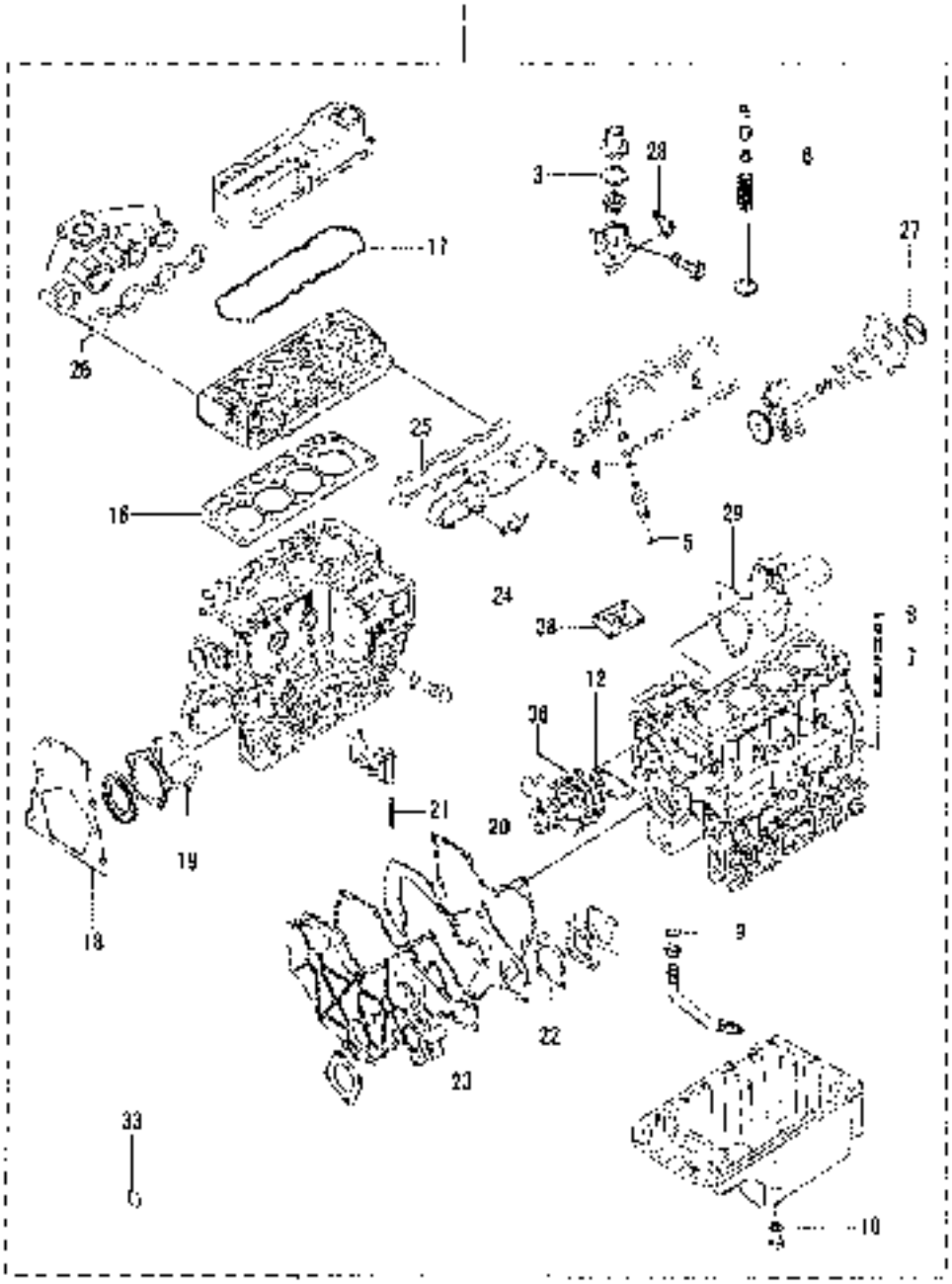

OVERHAUL GASKET KIT

FIG. 94

NO	PART NO	PART NAME & DESCRIPTION	QTY A	QTY B	QTY C	APP.NO	REM.
1	31A84-06010	GASKET KIT, OVERHAUL	1	-	1		
2	31A43-00700	GASKET	1	1	1		
3	31A46-11200	GASKET, THERMOSTAT	1	1	1		
4	MD068355	GASKET, FUEL RETURN	4	4	4		
5	MD070717	GASKET, HOLDER	4	4	4		
6	MD115472	SEAL, VALVE STEM	8	8	8		
7	MD701788	O-RING	1	1	1		
8	MF520812	O-RING	1	1	1		
9	MF660326	GASKET	1	1	1		
10	MF000085	GASKET, OIL DRAIN	2	2	2		
11	30A11-00101	GASKET	3	3	3		
12	20145-00101	GASKET, WATER PUMP	1	1	1		
13	30A66-00101	GASKET, STARTER	2	2	2		
14	MD050317	O-RING, FILTER CAP	1	1	1		
15	30A30-00200	GASKET	2	2	2		
16	31A01-33330	GASKET, CYLINDER HEAD	1	1	1		
17	31A04-23202	GASKET, ROCKER COVER	1	1	1		
18	31A07-02401	GASKET, REAR	1	1	1		
19	31A07-11701	GASKET, OIL SEAL CASE	1	1	1		
20	31A07-11901	GASKET, FRONT PLATE	1	1	1		
21	31A07-12200	SEAL, SIDE	4	4	4		
22	31A11-05200	GASKET, HOUSING	1	1	1		
23	31A11-11101	GASKET, GEAR	1	1	1		
24	31A30-00401	GASKET, INLET PIPE	1	1	1		
25	31A30-10902	GASKET, INLET COVER	1	1	1		
26	31A32-01200	GASKET, EXHAUST MANIF	1	1	1		
27	31A36-02300	PACKING, BODY	1	1	1		
28	31A48-10101	GASKET, THERMO CASE	1	1	1		
29	31A63-12201	GASKET, GOVERNOR CASE	1	1	1		
30	40168-15200	GASKET, INLET COVER	3	3	3		
31	MM434046	GASKET, TURBO	1	1	1		
32	MF680363	GASKET	2	2	2		
33	05146-01601	WASHER, SEALING	4	4	4		
34	32C29-00200	O-RING, OIL COOLER	1	1	1		
35	MF520004	O-RING, LEVEL GAGE	1	1	1		
36	MM408326	GASKET, WATER PUMP	1	1	1		40053385
37	30A63-00101	GASKET, TIE-ROD COVER	1	1	1		
38	MM435249	PROTELTOR, OIL INLET	1	1	1		40152875
39	F4202-14000	GASKET	2	2	2		
40	32A91-05100	GASKET, LIQUID	1	1	1		
41	F3153-06000	O-RING	1	1	1		
42	MD003332	GASKET	2	2	2		

07-06-25 01

ENGINE (C3030/C3040) Part number INDEX

PART NO.	FIG NO.	Key No	PART NO
C4826-22000	07-01	01	
C4826-23500	07-01	02	
C9006-83020	61-03-01	16	
C9011-05070	61-03-01	01	
C9013-13620	61-03-01	07	
C9013-63640	61-03-01	03	
C9013-73130	61-03-01	04	
C9014-02500	61-03-01	05	
C9014-02610	61-03-01	05	
C9015-05450	61-03-01	06	
C9016-10210	61-03-01	07	
C9016-30382	61-03-01	09	
C9016-40170	61-03-01	09	
C9017-00170	61-03-01	13	
C9018-30050	61-03-01	14	
C9021-00440	61-03-01	11	
C9024-40180	61-03-01	15	
C9030-10080	61-03-01	12	
C9046-70030	61-03-01	15	
C9911-03940	61-02	01	
C9912-10360	61-02	04	
C9912-70310	61-02	03	
C9916-41351	61-02	07	
C9917-40070	61-02	05	
C9917-51810	61-02	02	
C9917-51830	61-02	02	
C9917-51850	61-02	02	
C9917-51870	61-02	02	
C9917-51890	61-02	02	
C9917-51910	61-02	02	
C9917-51930	61-02	02	
C9917-51950	61-02	02	
C9917-51970	61-02	02	
C9917-51990	61-02	02	
C9940-05060	61-02	05	
C9950-35444	61-03-01	22	
C9950-35510	61-03-01	22	
30A05-31402	04-02	8	
30A36-25901	90	4	
30A36-25901	94	17	
30A19-00010	17	11	
30A19-00020	17	12	
30A19-00030	17	13	
30A30-00200	94	16	
30A87-10040	87	1	
30A87-23400	87	02	
30H48-00200	45	6	
30L07-00700	07-01	15	
30L46-02700	90	2	
30L63-00020	63-01	09	
30L63-00600	63-01	10	
31A01-02500	01-01	06	
31A01-02600	01-01	06	
31A01-11100	01-01	4	
31A01-21060	01-01	1	
31A01-33000	01-01	5	
31A01-33300	94	12	
31A01-50040	01-01	1	
31A03-01101	01-01	03	
31A03-01500	01-01	02	
31A04-00700	04-01	7	
31A04-01201	04-01	3	
31A04-11020	04-01	03	
31A04-20031	04-02	1	
31A04-20200	04-01	2	
31A04-20010	04-01	02	

PART NO	FIG NO.	Key No	PART NO
31A04-33042	04-01	8	
31A04-33100	04-01	1	
31A04-33202	04-02	2	
31A04-33202	94	15	
31A04-34100	04-01	12	
31A04-34300	04-01	13	
31A05-00201	04-02	6	
31A05-01300	04-02	11	
31A07-00600	07-01	03	
31A07-02300	07-02	3	
31A07-02401	07-02	11	
31A07-02401	94	20	
31A07-02500	07-01	18	
31A07-03100	07-01	04	
31A07-04500	07-02	10	
31A07-11600	07-02	1	
31A07-11701	07-02	2	
31A07-11701	94	21	
31A07-11900	11	2	
31A07-11901	94	22	
31A07-12200	07-01	14	
31A07-12200	94	23	
31A07-42010	07-01	1	
31A08-04101	07-02	13	
31A11-00800	11	4	
31A11-02100	11	1	
31A11-05101	11	8	
31A11-05201	11	9	
31A11-05201	94	24	
31A11-11101	11	5	
31A11-11101	94	25	
31A13-02020	13	1	
31A13-04100	13	2	
31A17-10600	17	7	
31A17-11100	17	1	
31A17-11200	17	2	
31A17-11300	17	3	
31A19-01021	17	9	
31A19-10021	17	8	
31A20-00102	17	14	
31A20-00200	17	15	
31A20-22100	17	20	
31A21-01970	17	23	
31A23-00061	07-01	13	
31A23-01023	23	3	
31A23-01302	17	24	
31A23-01404	23	1	
31A23-01502	23	4	
31A23-10101	23	2	
31A30-00300	30	3	
31A30-00601	30	4	
31A30-00001	94	26	
31A30-10602	30	9	
31A30-10602	94	27	
31A30-20010	30	1	
31A32-00402	30	7	
31A32-01200	30	8	
31A32-01200	94	28	
31A32-02100	30	12	
31A35-02300	35	01	
31A35-02300	94	29	
31A35-05050	35	1	
31A35-30010	35	1	
31A42-10100	36	5	
31A45-30700	45	5	
31A46-00002	45	04	

PART NO	FIG NO	Key No	PART NO
31A46-01060	45	10	
31A46-01200	45	07	
31A46-10101	45	11	
31A46-10101	90	30	
31A48-01100	45	7	
31A61-01200	61-01	07	
31A61-01300	61-01	03	
31A61-03200	61-01	12	
31A61-04100	61-01	4	
31A61-04200	61-01	5	
31A61-04300	61-01	8	
31A61-04400	61-01	7	
31A61-05102	61-01	24	
31A61-12600	61-01	11	
31A62-21100	62	2	
31A63-00071	63-01	22	
31A63-00071	63-01	26	
31A63-00400	63-01	12	
31A63-00400	63-01	10	
31A63-00500	63-01	13	
31A63-00500	63-01	11	
31A63-01400	63-01	14	
31A63-01400	63-01	12	
31A63-01800	63-01	15	
31A63-01800	63-01	13	
31A63-02300	63-01	10	
31A63-02300	63-01	10	
31A63-02400	63-01	16	
31A63-02400	63-01	14	
31A63-02500	63-01	17	
31A63-02500	63-01	15	
31A63-02700	63-01	18	
31A63-07700	63-01	16	
31A63-03300	63-01	19	
31A63-04040	63-01	17	
31A63-04200	63-01	23	
31A63-05601	63-01	11	
31A63-07800	63-01	20	
31A63-07900	63-01	24	
31A63-09010	63-01	1	
31A63-10090	63-01	24	
31A63-10090	63-01	28	
31A63-10305	63-01	3	
31A63-10305	63-01	3	
31A63-11061	63-01	5	
31A63-11061	63-01	5	
31A63-11301	63-01	21	
31A63-11301	63-01	25	
31A63-12201	63-01	2	
31A63-12201	63-01	2	
31A63-12201	94	31	
31A63-23201	63-01	4	
31A63-20001	63-01	1	
31A63-22100	63-01	23	
31A63-22100	63-01	27	
31A63-55021	63-01	1	
31A65-11200	64-01	9	
31A66-20041	61-03-01	1	
31A66-21040	61-03-01	1	
31A66-04101	66-01	2	
31A66-03402	66-01	12	
31A66-02100	66-01	5	
31A66-21300	66-01	11	
31A90-03300	90	5	
31A94-30011	94	1	
32A04-02400	04-01	35	

ENGINE (C3030/C3040) Part number INDEX

PART NO.	FIG. NO.	Key No	PART NO.
32436-06011	36	3	
32466-03100	06-01	1	
32491-06100	34	32	
32004-04500	04-01	14	
32004-06100	04-01	15	
40052007	23	5	
40052815	04-02	7	MF476215
40052815	17	16	MF476215
40052820	63-01	14	MM300540
40052829	63-01	14	MM300540
40052839	61-01	17	MM409031
40052839	61-01	13	MM409036
40052841	45	1	MM403309
40052842	45	02	MM409314
40052843	65-02	1	MM409413
40052846	52	11	MM409956
40052847	61-01	25	MM413206
40052848	35	7	MM430558
40052864	04-01	4	MM433306
40052875	63-01	12	MM435249
40052875	63-01	12	MM435249
40052875	34	15	MM435249
40052884	07-02	8	MM437313
40052890	52	1	MM438732
40055361	17	10	MM437305
40055363	61-01	21	MM436738
40055365	45	00	MM409326
40055365	34	12	MM409326
40055365	52	10	MM420851
40055369	04-01	8	MC015472
40055369	34	05	MC015472
40055372	01-01	01	MC000245
40055749	45	01	MDC01370
40055749	11	7	MDC09762
40055751	04-02	5	MC008764
40055756	17	02	MDC21105
40055759	45	9	MU041724
40055772	61-01	3	MC068353
40055773	61-01	2	MDC68355
40055773	34	03	MC068355
40055776	61-01	1	MC070717
40055776	34	04	MDC70717
40055785	36	5	MD136952
94002-20150	01-03-01	13	
94001-61020	61-03-01	20	
94002-00030	61-02-02	23	
94004-00000	61-03-01	17	
94016-00310	61-03-01	19	
F1036-05010	04-01	01	
F1036-08020	07-02	4	
F1036-08020	30	10	
F1036-08020	63-01	16	
F1036-08022	35	2	
F1036-08040	13	3	
F1036-08045	19	6	
F1036-08045	63-01	9	
F1036-08045	63-01	9	
F1036-08065	30	11	
F1036-12020	07-01	19	
F1036-06012	35	9	
F1036-06018	63-01	13	
F1036-06018	63-01	13	
F1036-06025	61-01	22	
F1036-06030	46	01	
F1036-06016	04-01	13	
F1036-06018	04-01	9	

PART NO.	FIG. NO.	Key No	PART NO.
F1036-06016	111	3	
F1036-06016	63	3	
F1036-06020	30	6	
F1036-06030	111	11	
F1036-06035	30	5	
F1036-06040	04-02	4	
F1036-06065	46	12	
F1036-10020	01-01	7	
F1036-10020	62	4	
F1036-10025	66-01	9	
F1036-06025	61-01	10	
F1036-06045	46	3	
F1036-06060	46	9	
F2326-06000	04-01	04	
F2616-06000	12	6	
F2616-06000	07-01	16	
F2650-03020	63-01	01	
F2050-03020	63-01	01	
F3150-01010	63-01	02	
F3150-01010	63-01	02	
F4202-22000	36	6	
F4202-22000	94	01	
F6000-08000	07-01	31	
X871630	63-01	03	
X871630	63-01	03	
M1086-20571	66-02	09	
V212X-11571	66-02	17	
M931C-01301	66-02	18	
N231X-01571	66-02	14	
M967T-73171	66-02	15	
M957X-85371	66-02	11	
M972X-00471	66-02	06	
M985X-03771	66-02	13	
M989X-11472	66-02	04	
M991C-02501	66-02	20	
M419X-04371	66-02	01	
M978D-22831	66-02	22	
M965X-33571	66-02	12	
M946B-27771	66-02	05	
M941X-65471	66-02	02	
M944B-21201	66-02	21	
M948D-28271	66-02	23	
M941C-05071	66-02	19	
M983X-14972	66-02	19	
M963C-00171	66-02	03	
M901X-00371	66-02	07	
MD000264	07-02	5	
MD000425	04-01	11	
MD000561	94	02	
MD000961	63-01	13	
MD001521	66-01	6	
MD002613	17	22	
MD005704	17	07	
MD006704	17	07	
MD015423	04-01	5	
MD019516	63-01	19	
MD021106	17	02	
MD021204	04-01	10	
MD024256	07-01	17	
MD031612	17	01	
MD037588	61-01	22	
MD701780	36	07	
MD701780	94	05	
MD701786	36	8	
MD703856	04-01	10	
MD952231	17	21	

PART NO.	FIG. NO.	Key No	PART NO.
MF140025	66-01	7	
MF140227	45	02	
MF200033	62	07	
MF241242	45	8	
MF401935	11	14	
MF401936	11	12	
MF401936	30	9	
MF430034	63-01	04	
MF430034	63-01	04	
MF430036	66-01	18	
MF430126	17	19	
MF430725	63-01	05	
MF430725	63-01	05	
MF430729	36	01	
MF450006	66-01	10	
MF450010	17	17	
MF450405	63-01	06	
MF450405	63-01	06	
MF450406	66-01	9	
MF450410	17	18	
MF472434	07-01	11	
MF472535	36	02	
MF476016	04-01	12	
MF520012	36	03	
MF520012	94	07	
MF520402	63-01	01	
MF520407	63-01	01	
MF522010	04-01	02	
MF660036	36	2	
MF660036	94	06	
MF660055	13	01	
MF660055	94	09	
MF665004	13	02	
MF665511	07-01	10	
MF665532	07-01	4	
MF665533	07-01	5	
MF665538	01-01	02	
MK651-14000	61-01	19	
MK992-00001	63-01	6	
MK992-00001	63-01	6	
MK992-00240	63-01	7	
MK993-00240	63-01	7	
MM316240	90	3	
MM320680	82	08	
MM331-31701	63-01	07	
MM331-31701	63-01	07	
MM400000	04-02	12	
MM400888	61-01	01	
MM401-20601	11	10	
MM401-20601	14	10	
MM402737	04-02	10	
MM407171	36	04	
MM407-42902	45	2	
MM407-42902	94	11	
MM408245	07-02	12	
MM408479	01-01	6	
MM409037	61-01	11	
MM409039	61-01	15	
MM409039	61-01	16	
MM409-31301	45	03	
MM409327	45	09	
MM409-41901	66-01	4	
MM409-41901	94	13	
MM408645	07-01	12	
MM409671	97	01	
MM409864	62	05	

ENGINE (C3030/C3040) Part number INDEX

PART NO.	FIG. NO.	Key No	PART NO.	PART NO.	FIG. NO.	Key No	PART NO.	PART NO.	FIG. NO.	Key No	PART NO.
MM409865	62	06									
MM409866	62	03									
MM409867	62	09									
MM409869	94	14									
MM410198	45	11									
MM430130	61-01	02									
MM430418	36	05									
MM430610	07-01	3									
MM430614	61-01	9									
MM430700	81-01	8									
MM433233	63-01	20									
MM433514	63-01	8									
MM433614	63-01	5									
MM433673	63-01	09									
MM433921	17	4									
MM433922	17	5									
MM433923	17	6									
MM434542	63-01	21									
MM435-13302	90	1									
MM435200	63-01	22									
MM435288	63-01	11									
MM435288	63-01	11									
MM435-54101	61-02	1									
MM437140	62-01	20									
MM437684	07-02	7									
MM437685	07-02	8									
MM437686	07-02	9									
MM438743	62	01									
MM438747	62	04									
MM438748	62	02									
MS401336	16	13									
MS470056	04-02	3									
MS471104	07-01	7									
MS471105	07-01	8									
MS471110	07-01	9									
MS602036	61-01	01									
MS602060	81-01	03									
MS632062	61-01	01									
MS803014	45	01									
MS834042	61-01	04									
MS890162	61-01	05									
MS890162	61-01	02									
MS890163	61-01	02									
MS890164	45	07									
MS890165	61-01	06									
MS951140	01-01	3									
MS951140	07-01	6									
S0340-16470	88-02	09									
S0340-60470	88-02	10									

CHASSIS PART

■ ENGINE

FUEL TANK ---------- FIG. 2-1 G. 040
ENGINE CONTROL ---------- FIG. 2-2 G. 100
ENGINE CONTROL ---------- FIG. 2-3 G. 100
MUFFLER ---------- FIG. 2-4 G. 150
RADIATOR ---------- FIG. 2-5 G. 170
AIR CLEANER ---------- FIG. 2-6 G. 190
ENGINE FRAME ---------- FIG. 2-7 G. 210,215

■ TM

CLUTCH ---------- FIG. 3-1 G. 250
CLUTCH PEDAL ---------- FIG. 3-2 G. 260
TRANSMISSION CASE ---------- FIG. 3-4 G. 250,280
MAIN SHAFT ---------- FIG. 3-5 G. 281,283
MAIN GEAR SHAFT ---------- FIG. 3-6 G. 281
RANGE GEAR SHAFT ---------- FIG. 3-7 G. 285
PTO SHAFT ---------- FIG. 3-9 G. 287
PTO DRIVE SHAFT ---------- FIG. 3-10 G. 283,287
FRONT WHEEL DRIVE ---------- FIG. 3-12 G. 288,380
SHIFT LEVER & FORK ---------- FIG. 3-13 G. 290,292
SHIFT LEVER & FORK ---------- FIG. 3-14 G. 290,292

■ DIFF. LOCK

DIFF LOCK ---------- FIG. 4-1 G. 310
REAR DIFFERENTIAL ---------- FIG. 4-2 G. 320

■ FRONT, REAR AXLE

FRONT AXLE ASSY ---------- FIG. 5-1 G. 400
FRONT AXLE CASE ---------- FIG. 5-2 G. 400
FRONT DIFFERENTIAL ---------- FIG. 5-3 G. 400
FRONT DRIVE ---------- FIG. 5-4 G. 400
REAR AXLE ---------- FIG. 5-5 G. 400
FRONT & REAR WHEEL (TIRE) ---------- FIG. 5-6 G. 490

■ STEERING

TIE ROD ---------- FIG. 6-1 G. 610
STEERING CYLINDER ---------- FIG. 6-2 G. 630
STEERING COLUMN ---------- FIG. 6-3 G. 630
STEERING PIPE LINE ---------- FIG. 6-4 G. 630

■ BRAKE

BRAKE ---------- FIG. 7-1 G. 650
BRAKE PEDALS ---------- FIG. 7-2 G. 670
PARKING BRAKE ---------- FIG. 7-3 G. 670

■ ELECTRICAL

ELECTRICAL WIRING ---------- FIG. 8-1 G. 730
BATTERY ---------- FIG. 8-2 G. 740
INSTRUMENT PANEL ---------- FIG. 8-3 G. 750
LAMP ---------- FIG. 8-4 G. 760

■ HYDRAULIC

HYDRAULIC HOUSING ---------- FIG. 9-1 G. 820
LIFT CONTROL VALVE & LINK ---------- FIG. 9-2 G. 822
TM CONTROL VALVE ---------- FIG. 9-3 G. 822
FRONT OUTLET & LOADER VALVE ---------- FIG. 9-4 G. 822
HYDRAULIC LINES ---------- FIG. 9-5 G. 823
HYDRAULIC PIPE LINE ---------- FIG. 9-5 G. 823
HYDRAULIC LINKAGE ---------- FIG. 9-6 G. 824
HYDRULIC CONTROL LEVER ---------- FIG. 9-7 G. 825
HYDRAULIC CYLINDER ---------- FIG. 9-8 G. 826
REMOTE CONTROL VALVE LINE ---------- FIG. 9-9 G. 827
UPPER LINK BRACKET ---------- FIG. 9-10 G. 828
DRAWBAR HITCH ---------- FIG. 9-11 G. 891
UPPER & LOWER LINK ---------- FIG. 9-12 G. 896
LIFT ROD ---------- FIG. 9-13 G. 896
CHECK LINK ---------- FIG. 9-14 G. 896
HYDRAULIC LINE & VALVE ---------- FIG. 9-15 G. 829

■ SHEET METAL, INTERIOR

HOOD ---------- FIG. 10-1 G. 830
STEP ---------- FIG. 10-2 G. 840
SEAT ---------- FIG. 10-4 G. 850
FENDER ---------- FIG. 10-14 G. 870
ROPS ---------- FIG. 10-15 G. 880
ROOF TOP ---------- FIG. 10-16 G. 880

■ TOOLS, DECAL

TOOLS ---------- FIG. 11-1 G. 920
DECAL ---------- FIG. 11-2 G. 960

FUEL TANK

FIG. 2-1B **G. 040**

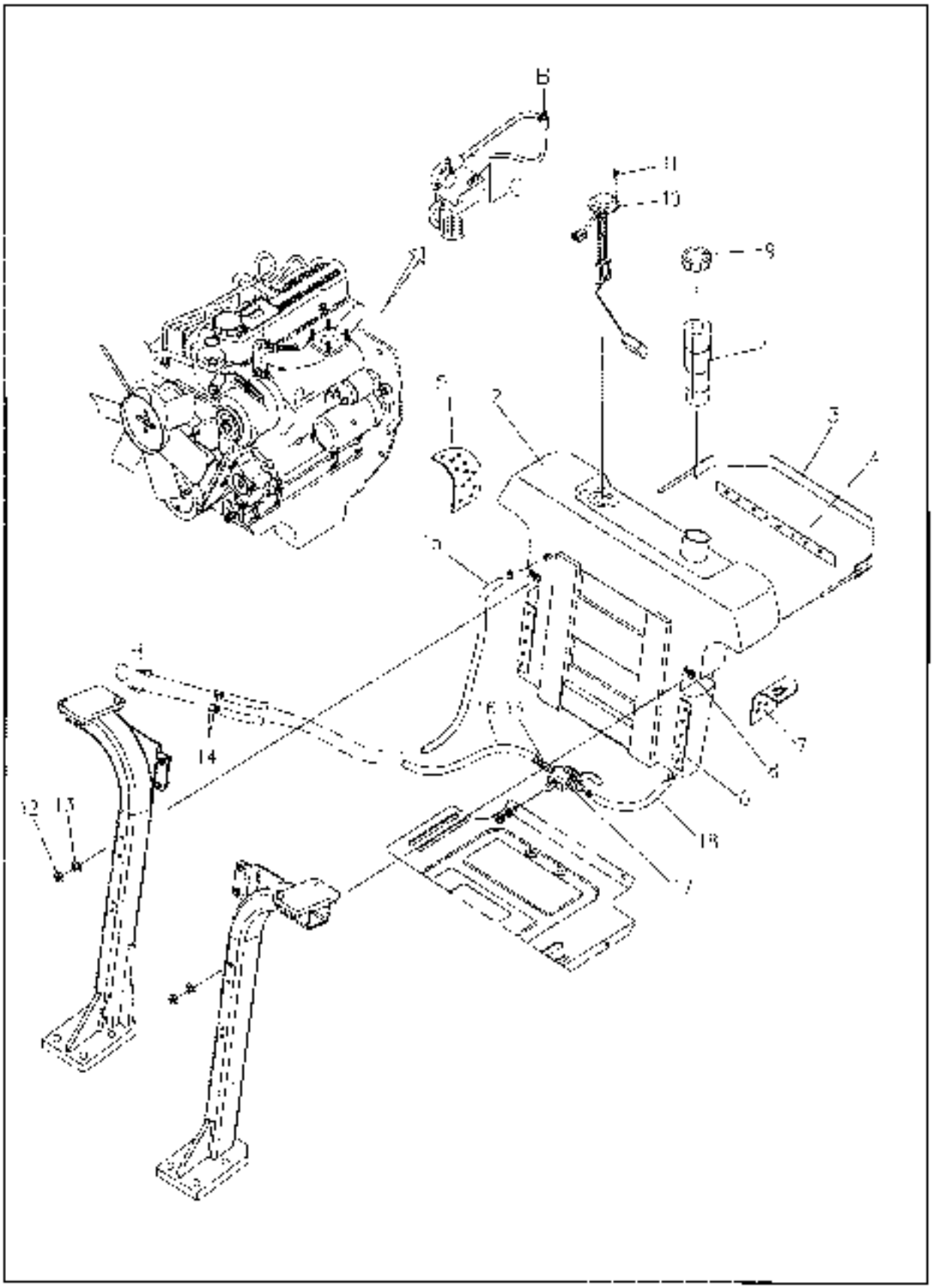

07-08-31 02

FUEL TANK

FIG. 2-1B

NO	PART NO	PART NAME & DESCRIPTION		QTY A	QTY B	QTY C	APP NO	REM.
1-12	40006746	TANK ASSY-FUEL-G040		1	*	*		
1	40008416	STRAINER-FUEL TANK-TRG040		1	*	*		
2	40008254	TANK FUEL-TRG040		1	*	*		
3	40008255	BAND-FUEL TANK-TRG040		1	*	1		
4	40006892	SPONGE-RUBBER-TRG040		1	*	1		
5	40006930	SPONGE-RUBBER(RH)-TRG040		1	*	1		
6	40006933	SPONGE-RUBBER-TRG040		2	*	2		
7	40006931	SPONGE-RUBBER(LH)-TRG040		1	*	1		
8	40006936	SPONGE-RUBBER-TRG040		2	*	2		
9	40006773	CAP ASSY-FUEL-G040		1	*	1		
10	40181436	GAUGE-FUEL(C)-TRG750		1	*	1		
11	40028908	BOLT-HEX W/WS-S153051613	M3x0.8x16L	5	*	5		
12	40027836	NUT-LOCK-TRG670	M8x1.25	2	*	2		
13	40028194	WASHER-PLN-S365082313	D20/8.4x1.6T	2	*	2		
14	40017070	CLAMP-HOSE-TRG970		6	*	6		
15	40007535	HOSE-FUEL-TRG040		1	*	1		
16	40007539	HOSE-FUEL-TRG040		1	*	1		
17	40007860	COCK-FUEL TANK-TRG040		1	*	1		
18	40007395	HOSE VALVE COCK-TRG040		1	*	1		

ENGINE CONTROL

FIG. 2-2 G. 100

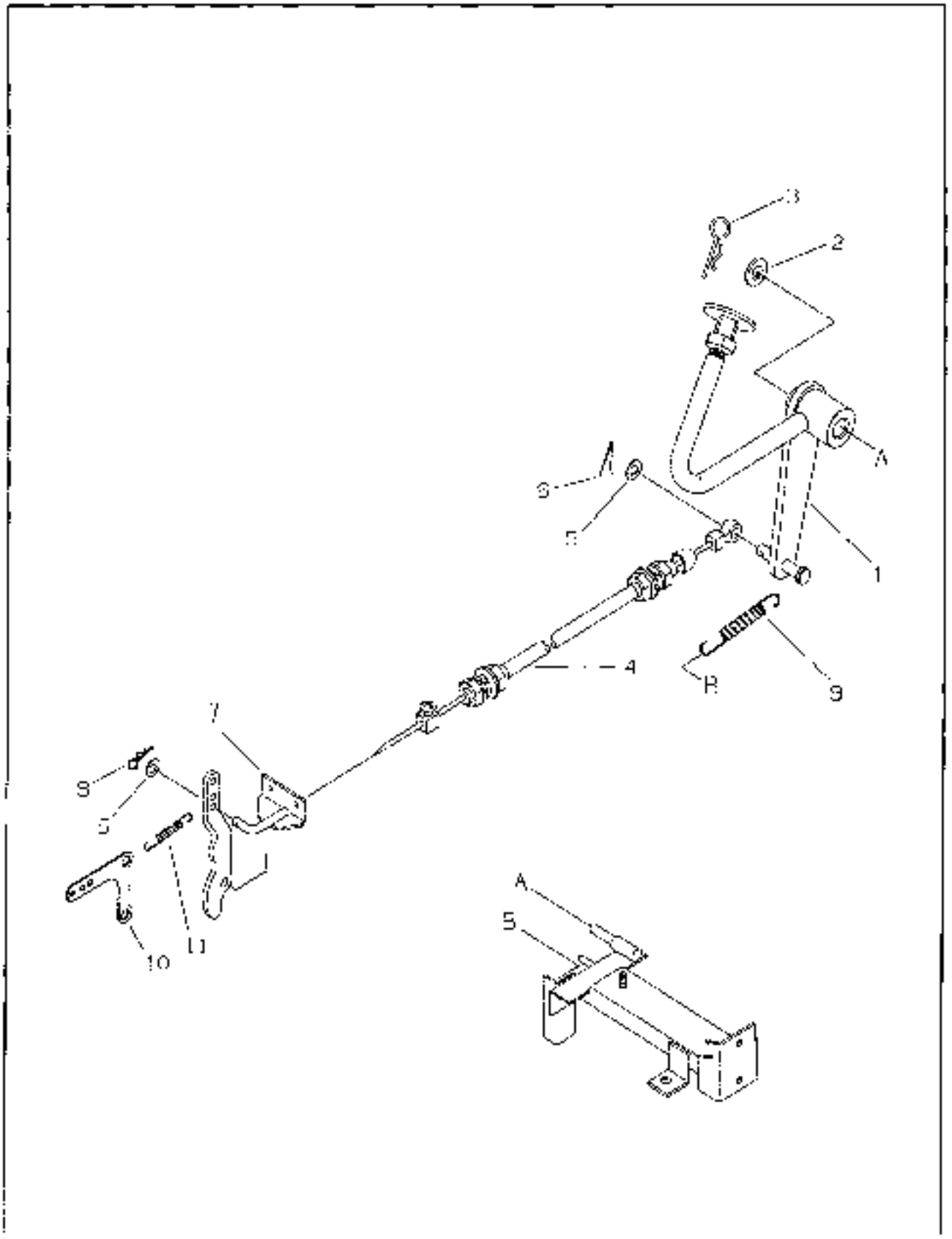

06-04-01

01

FIG. 2-2

NO.	PART NO.	PART NAME & DESCRIPTION		QTY A	QTY B	QTY C	APP NO.	REM.
1	40011791	PEDAL-ACCELERATOR-TRG100		1	1	1		
2	40020172	WASHER-PLN-S364120013	Φ24xΦ13x2.5t	1	1	1		
3	40029133	PIN-SNAP-S443120013	Φ1.8	1	1	1		
4	40007925	WIRE ACC PEDAL-TRG100		1	1	1		
5	40008407	WASHER-PLASTIC-TRG970	Φ17xΦ6x3.0t	2	2	2		
6	40029120	PIN-SPLIT-S441251613	Φ2.3	1	1	1		
7	40012506	ROD-ENGINE CONTROL-TRG100		1	1	1		
8	40029130	PIN SNAP S443060013	Φ1.2	1	1	1		
9	40011936	SPRING-TRG100		1	1	1		
10	40012283	BRACKET-RETURN SPRING-TRG100		1	1	1		
11	40012354	SPRING-TRG100		1	1	1		

ENGINE CONTROL

FIG. 2-3 G. 100

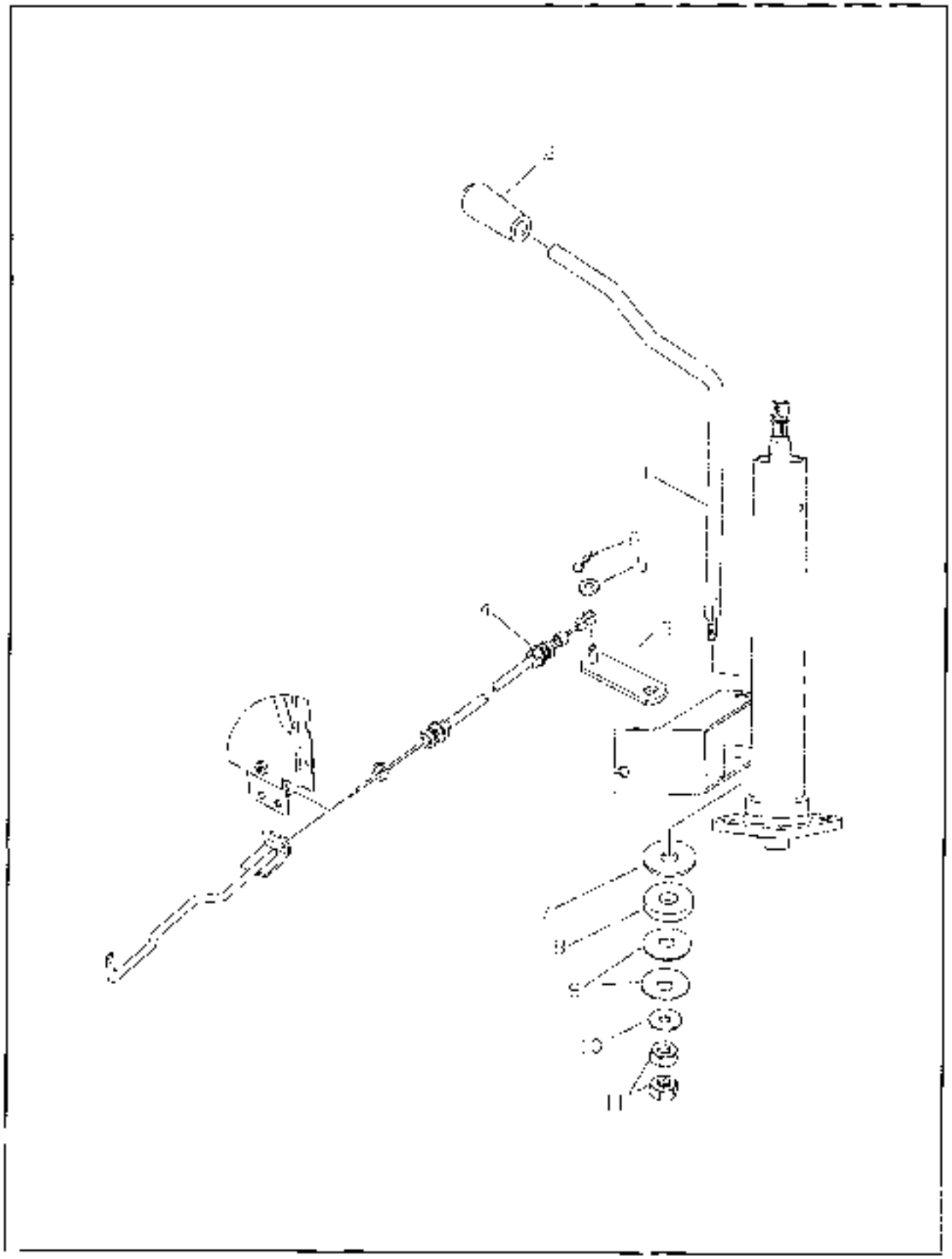

FIG. 2-3

NO.	PART NO.	PART NAME & DESCRIPTION		QTY A	QTY B	QTY C	APP.NO	REM.
1	43011312	LEVER-ACCELERATOR-TRG100		1	1	1		
2	43012860	GRIP-A0710037		1	1	1		
3	43011896	ARM-ENGINE CONTROL-TRG400		1	1	1		
4	43007743	WIRE ACC LEVER-TRG100		1	1	1		
5	40009407	WASHER-PLASTIC-TRG970	Φ17xΦ8x3.0t	1	1	1		
6	40029130	PIN-SNAP-S143060013	Φ1.2	1	1	1		
7	40009339	FRICTION-THG100	Φ28xΦ13x2.0t	1	1	1		
8	40028172	WASHER PLN-S364120013	Φ24xΦ13x2.5t	1	1	1		
9	40029067	WASHER-CONISPR-S372120023	Φ24xΦ13x2.2t	2	2	2		
10	40028169	WASHER-PLN-S364060013	Φ17xΦ8.4x1.6t	1	1	1		
11	40029043	NUT HEX SMALL-S313000010	M10X1.25P	2	2	2		

MUFFLER

FIG. 2-4 G. 150

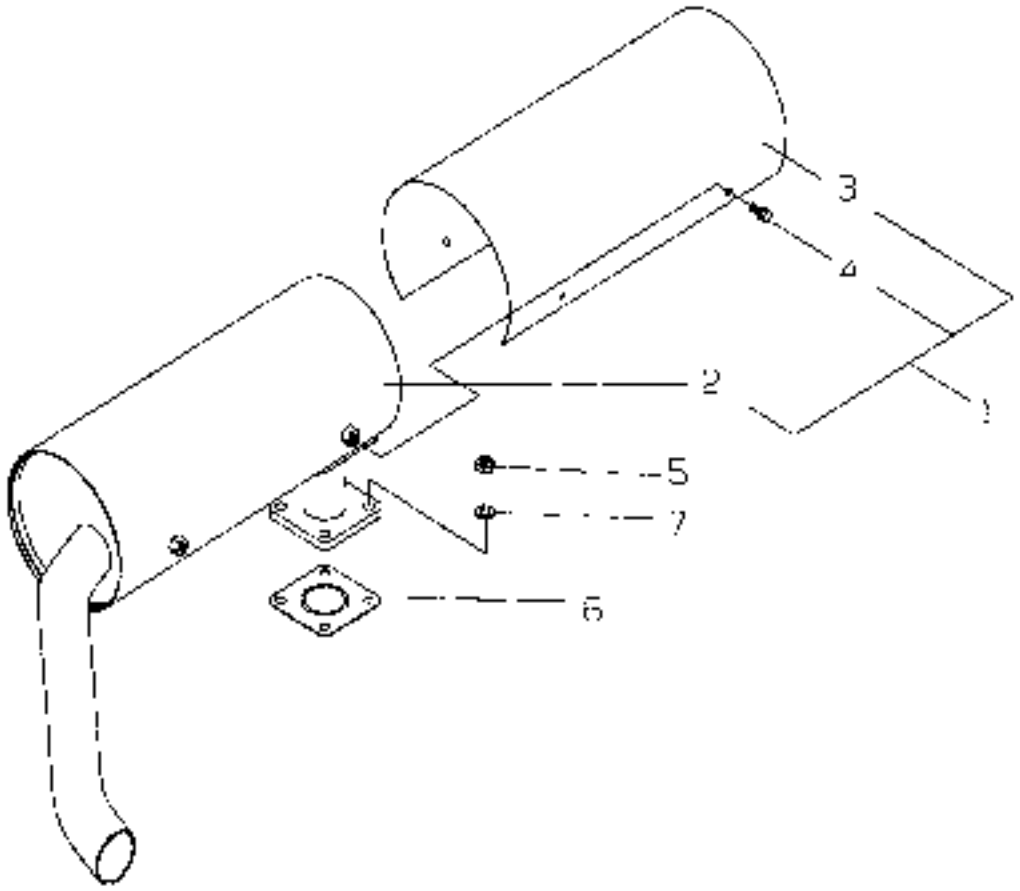

04-05-01 00

MUFFLER

FIG. 2-4

NO.	PART NO.	PART NAME & DESCRIPTION		QTY A	QTY B	QTY C	APP. NO	REM.
1	40010982	MUFFLER-TRG150		1	1	1		
2	40011077	MUFFLER TRG150		1	1	1		
3	40010972	COVER-MUFFLER-TRG150		1	1	1		
4	40028396	BOLT-HEX WWS-S159061233	M8x1.0Px12L	4	4	4		
5	40029075	NUT-FLANGE-S345080013	M8x1.25P	4	4	4		
6	40006941	GASKET-MUFFLER-TRG150		1	1	1		
7	40029546	WASHER-SPR S261080013		4	4	4		

04-05-01

00

RADIATOR

FIG. 2-5 G. 170

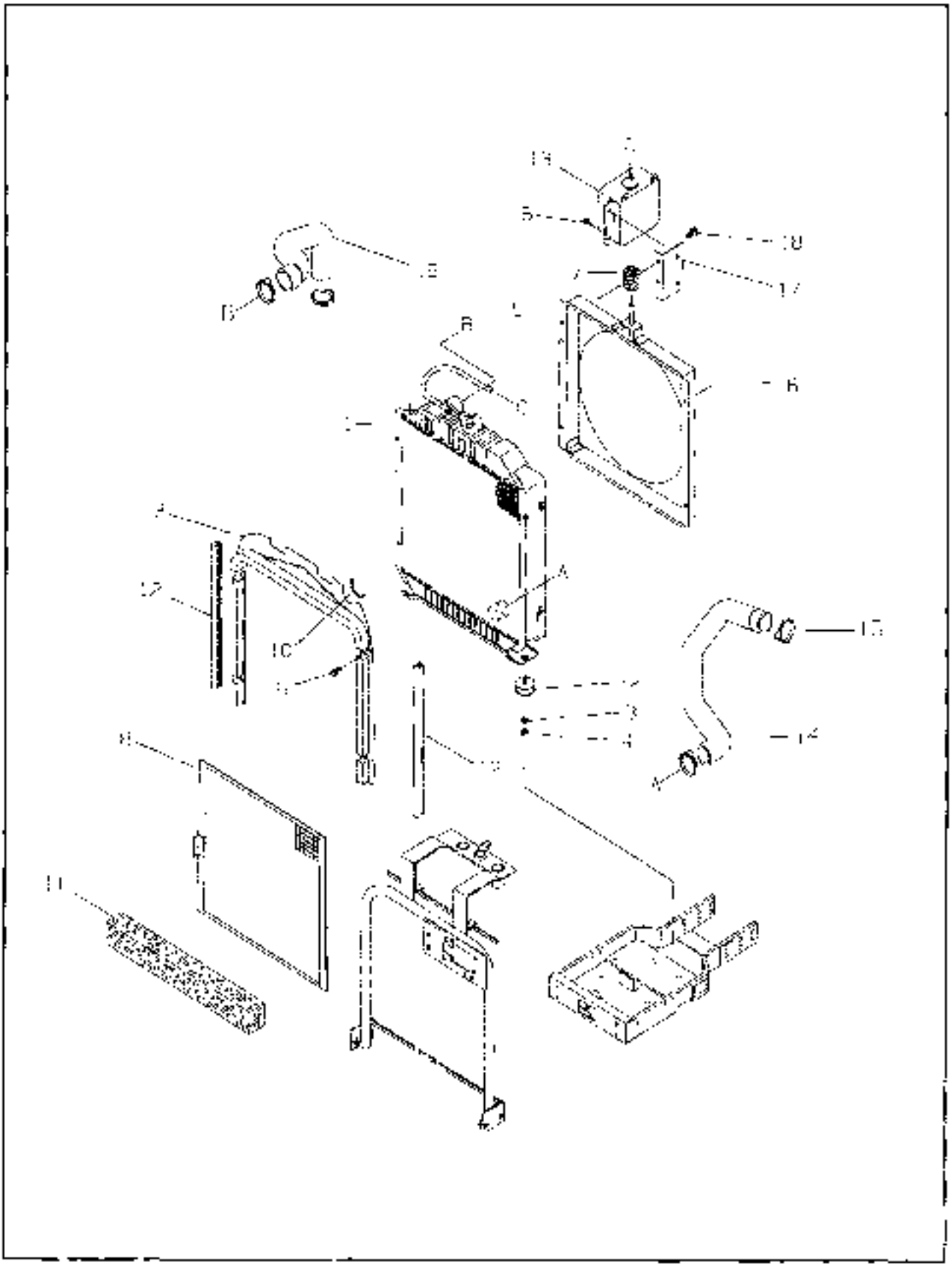

04-05-01 00

FIG. 2-5

NO.	PART NO.	PART NAME & DESCRIPTION		QTY A	QTY B	QTY C	APP.NO	REM.
1	40007615	RADIATOR-4ROW-TRG170		1	1	1		
2	40007459	RUBBER-DAMPING-TRG970		2	2	2		
3	40029648	WASHER-SPR-S361100013	Φ19.4xΦ10.2x2.5L	2	2	2		
4	40029047	NUT-HEX SMALL-S314100013	M10x1.25P	2	2	2		
5	40011234	SHROUD-FAN-TRG170		1	1	1		
6	40029009	BOLT-HEX W/WS S159082533	M9x1.25Px25L	9	9	9		
7	40007531	RUBBER-CUSHION-TRG970		1	1	1		
8	40011143	NET RADIATOR TRG170		1	1	1		
9	40006981	RAD/PLATE ASSY-SPONGE-G170		1	1	1		
10	40012013	CLAMP-HOSE-TRG970		1	1	1		
11	40006890	SPONGE RAD/AIR SEAL TRG170		1	1	1		
12	40007482	WEATHER STRIP-RADIATOR-TRG170		2	2	2		
13	40008309	TANK RESERVOIR TRG170		1	1	1		
14	40007252	HOSE-RADIATOR OUTLET-TRG170		1	1	1		
15	40012012	CLAMP HOSE TRG970		3	3	3		
16	40007253	HOSE-RADIATOR INLET-TRG170		1	1	1		
17	40012508	BRACKET RESERVOIR TANK-TRG170		1	1	1		
18	40026971	BOLT-HEX W/WS-S155082033	M8x1.25Px20L	2	2	2		

AIR CLEANER

FIG. 2-6A G. 190

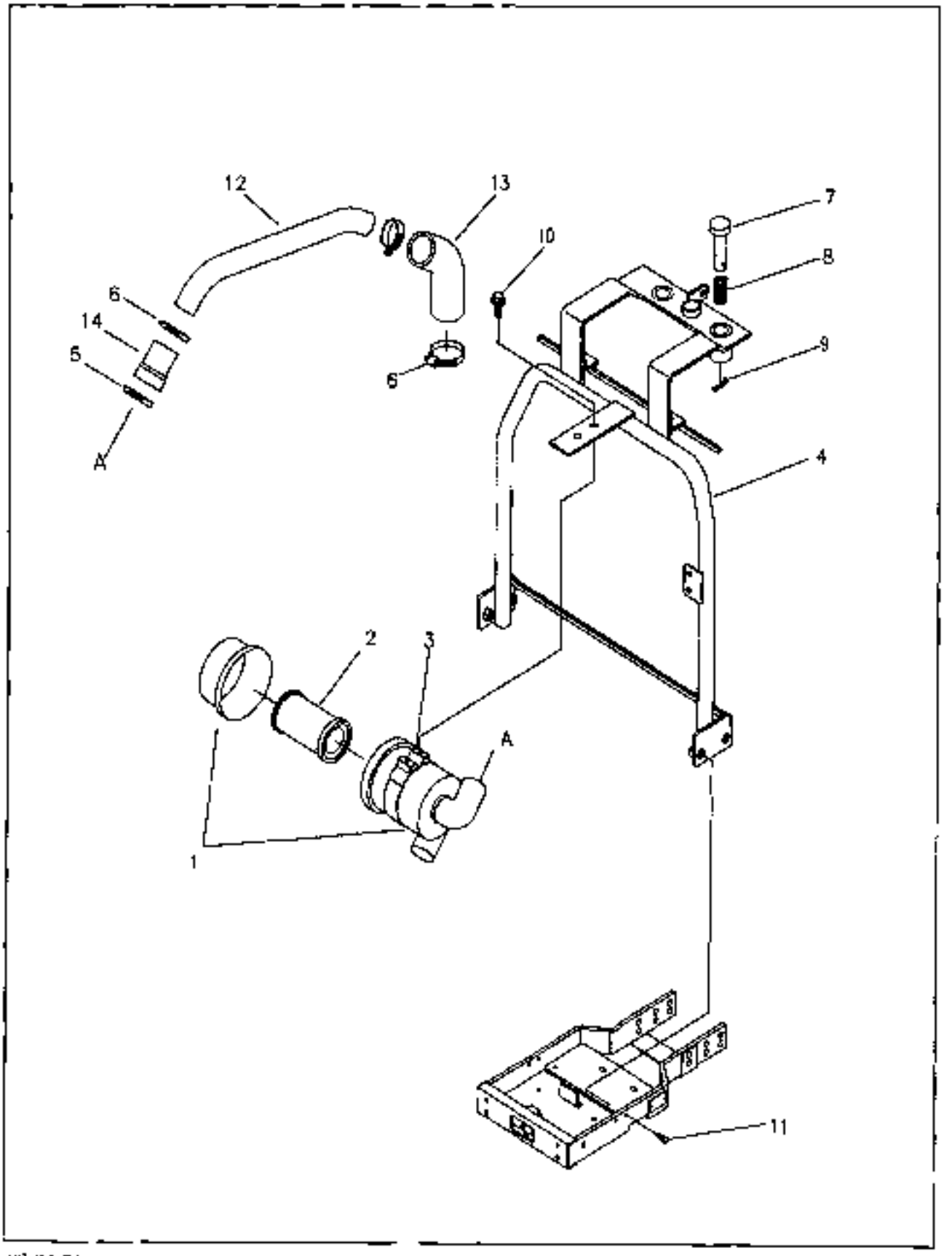

FIG. 2-6A

NO	PART NO.	PART NAME & DESCRIPTION	QTY A	QTY B	QTY C	APP NO	PFM
1-3	40007966	AIR CLEANER-BINCH-TRG190	*	*	1		
1	*	AIR CLEANER-TRG190	1	*	1		
2	40007575	ELEMENT-PRIMARY-TRG190	1	*	1		
3	40011733	BAND-AIR CLEANER-TRG190	1	*	1		
4	40011201	SUPPORT-AIR CLEANER-TRG190	1	*	1		
5	40012016	CLAMP-HOSE-TRG970	1	*	1		
6	40012014	CLAMP-HOSE-TRG970	3	*	3		
7	40007537	DAMPER-DOOR-TRG830	2	*	2		
8	40012768	SPRING-A0690127	2	*	2		
9	40029133	PIN SNAP S443120113	2	*	2		
10	40029971	BOLT-HEX WWS-S155062033	2	*	2		
11	40029960	BOLT-HEX WWS-S154100633	4	*	4		
12	40012113	PIPE-AIR INTAKE-TRG190	1	*	1		
13	40007424	HOSE-AIR INTAKE-TRG190	1	*	1		
14	40007425	HOSE-AIR INTAKE-TRG190	1	*	1		

ENGINE FRAME

FIG. 2-7A **G. 210, 215**

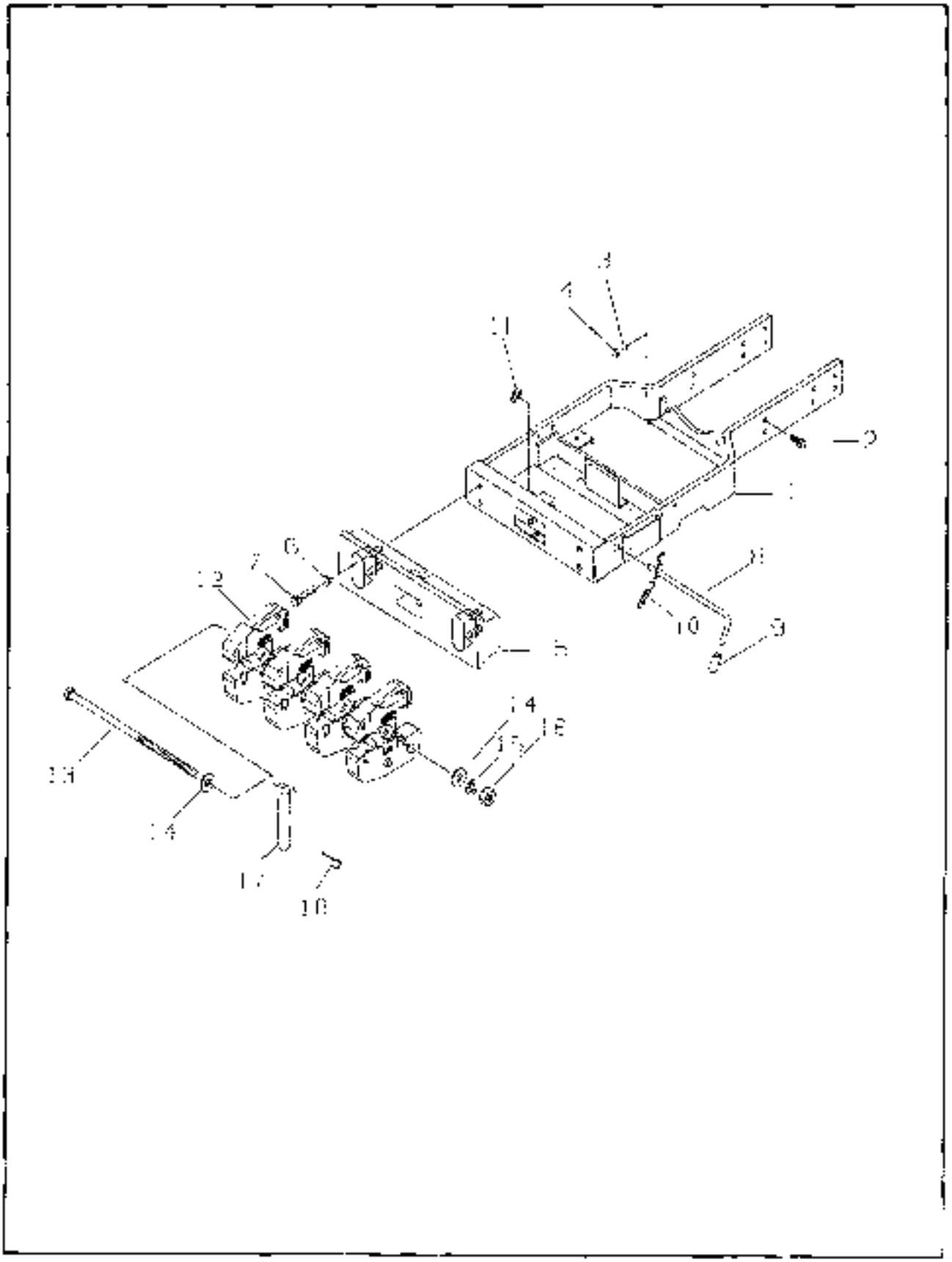

06-04-01

01

FIG. 2-7A

NO.	PART NO	PART NAME & DESCRIPTION		QTY A	QTY B	QTY C	A/P.NO	REM.
1	40010914	FRAME-ENGINE TRG210		1	1	1		
2	40029860	BOLT-HEX WWS-S154123533		12	12	12		
3	40029561	WASHER-SPR S361120012	Φ21.5xΦ12.5x3.0t	2	2	2		
4	40029049	NUT-HEX SMALL-S3141 20013	M12x1.25P	2	2	2		
5	40006700	WEIGHT-BUMPER-TRG215		1	1	1		
6	40029563	WASHER-SPR S361140012	Φ24.5xΦ14.2x3.5t	4	4	4		
7	40029472	BOLT-HEX-S103148043	M14x1.5Px60L	4	4	4		
8	40011754	HOOK-GRILLE TRG830		1	1	1		
9	40012880	GRIP-AC710037		1	1	1		
10	40009698	SPRING TRG830		1	1	1		
11	40026259	RING-SNAP-S8 0012001		1	1	1		
12	40006713	WEIGHT-FRONT-TRG215	20kg/7t	4	4	4		OPT
13	40006640	BOLT-HEX-TRG215	M16x1.5	1	1	1		OPT
14	40017107	WASHER-STOP-TRG215	Φ38xΦ17x5t	2	2	2		OPT
15	40026555	WASHER-SPR-S361160013	Φ28xΦ16.2x4t	1	1	1		OPT
16	40029052	NUT-HEX SMALL-S3141160013	M16x1.5	1	1	1		OPT
17	40011969	PIN FRONT HOOK-TRG215		1	1	1		OPT
18	40009676	PIN-SNAP-TRG070		1	1	1		OPT

CLUTCH

FIG. 3-1 G. 250

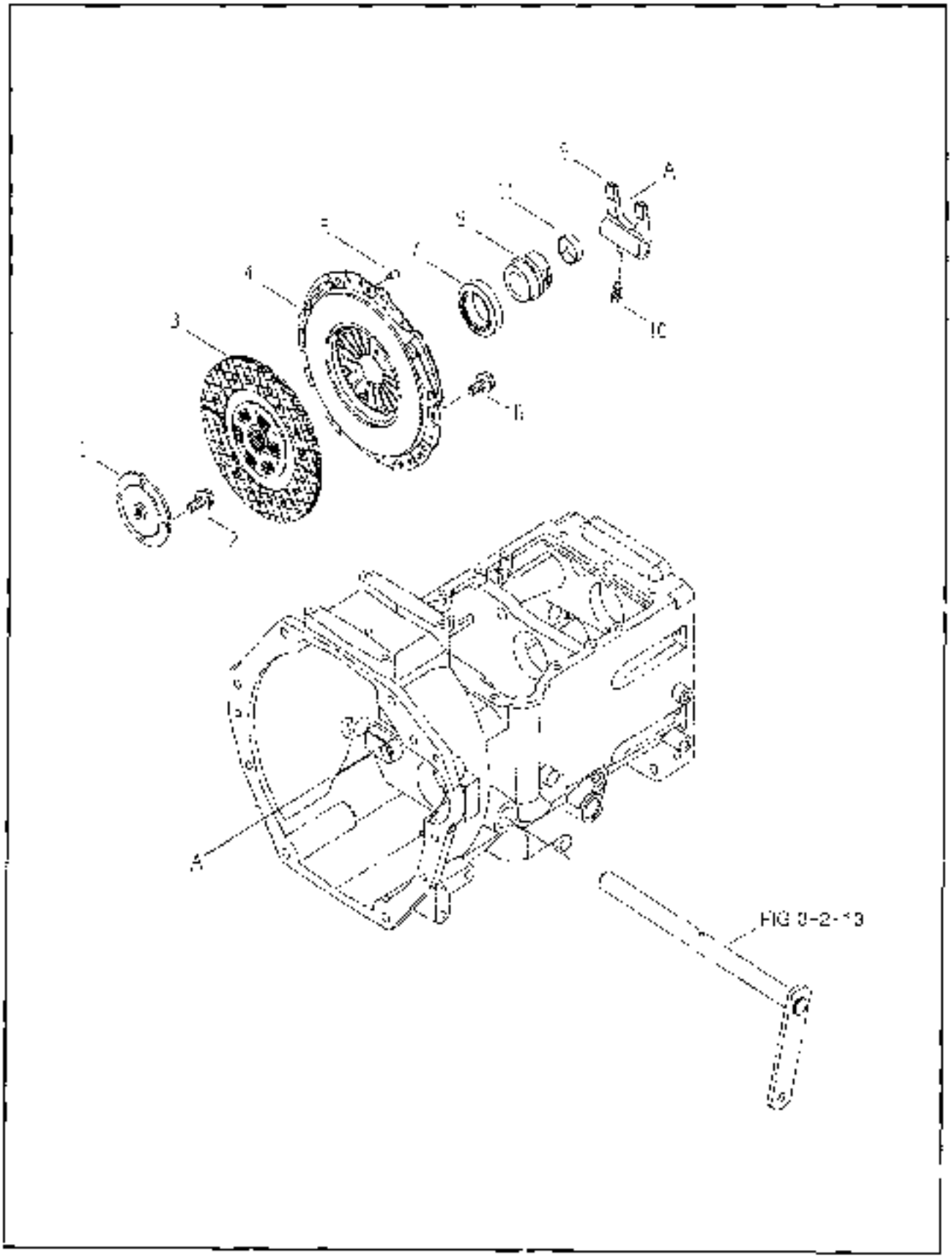

04-05-01 00

CLUTCH

FIG. 3-1

NO.	PART NO.	PART NAME & DESCRIPTION		QTY A	QTY B	QTY C	APP NO	REM.
1	40009814	SLEEVE FLY WHEEL TRG261		1	*	1		
2	40028948	BOLT-HEX W/WS-S154102533	M10x1.25x25L	4	*	4		
3-1	40007882	CLUTCH ASSY-TRG250		1	1	1		
3	40007878	DISK ASSY-CLUTCH-TRG250		1	1			
4	40007595	COVER ASSY-CLUTCH-TRG250		1	1	1		
5	40025101	PIN-PAR-S4730816 10	08x16L	3	3	3		
6	40020923	BOLT-HEX W/WS S153082533	M8x1.25x25L	6	6	6		
7	40007837	BEARING-RELEASE-TRG250	[illegible]	1	1	1		
8	40009746	HUB-RELEASE BEARING-TRG250			1	1		
9	40010337	LEVER-CLUTCH SHIFT-TRG250		1	1	1		
10	40010190	BOLT LOCKING TRG250	M12x1.25	1	1	1		
11	40007822	BUSHING-SELF LUB-TRG250	OD42x ID38x30L	1	1	1		

CLUTCH PEDAL

FIG. 3-2 G. 260

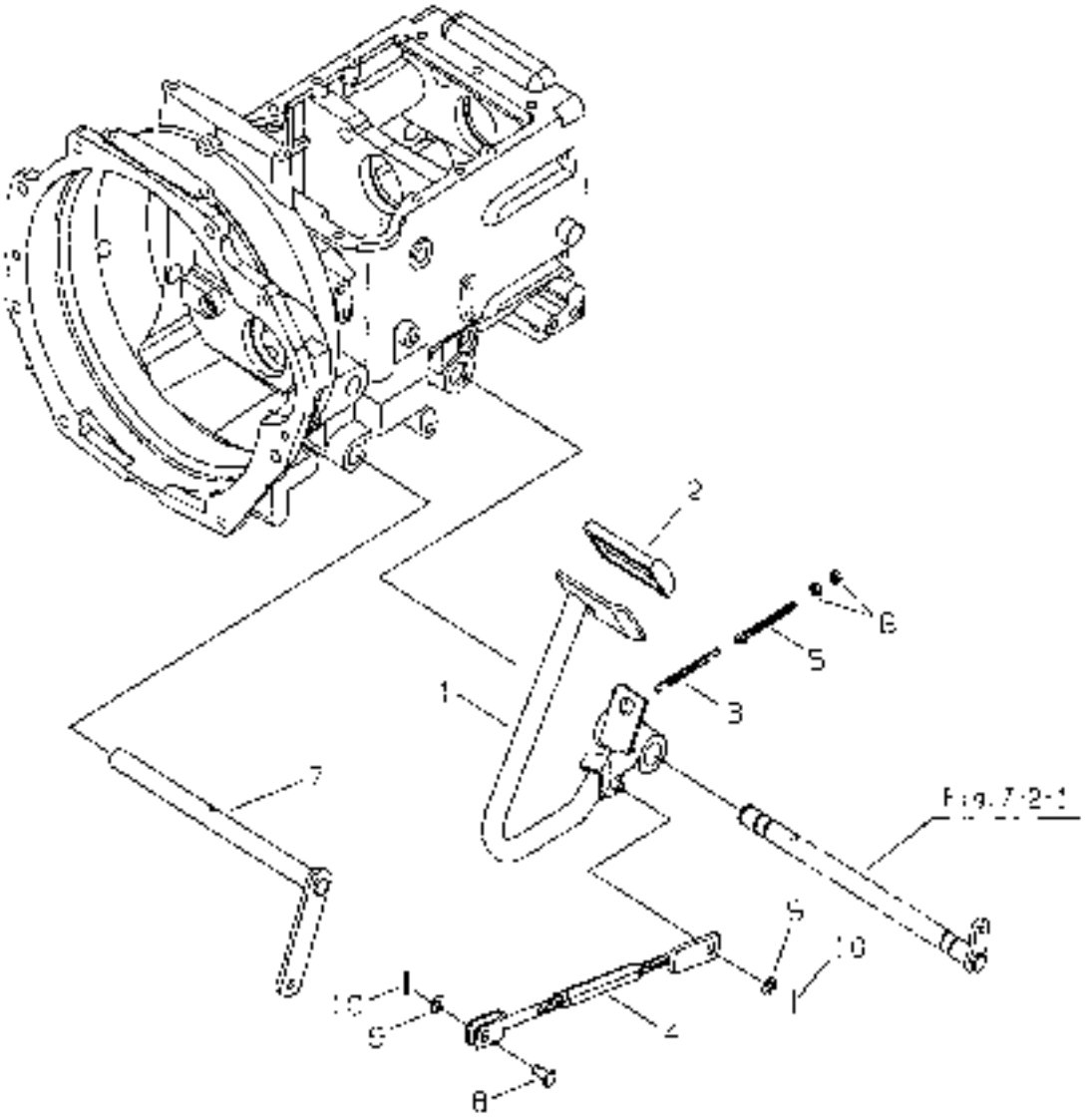

06-04-01 01

CLUTCH PEDAL

FIG. 3-2

NO.	PART NO.	PART NAME & DESCRIPTION		QTY A	QTY B	QTY C	APP NO	REM
1	40011244	PEDAL-CLUTCH-TRG260		1	1	1		
2	40007362	PAD-PEDAL TRG670		1	1	1		
3	40011961	SPRING-TRG260		1	1	1		
4	40036101	LINK ASSY-CLUTCH-TRG260		1	1	1		
5	40012138	BOLT-ADJUST-TRG260	M8x1.25	1	1	1		
6	40026727	NUT-FFX 1 TY-S3C1080043	M8x1.25	2	2	2		
7	40012573	SHAFT-CLUTCH LEVER-TRG260		1	1	1		
8	40029108	PIN-HEAD S427102013	Ø10x20L	1	1	1		
9	40028171	WASHER-PLN-S364103013	OD21xID10.5x2.0t	2	2	2		
10	40029121	PIN SPLIT S441252013	Ø2.5x20L	2	2	2		

TRANSMISSION CASE

FIG. 3-4B G. 250, 280

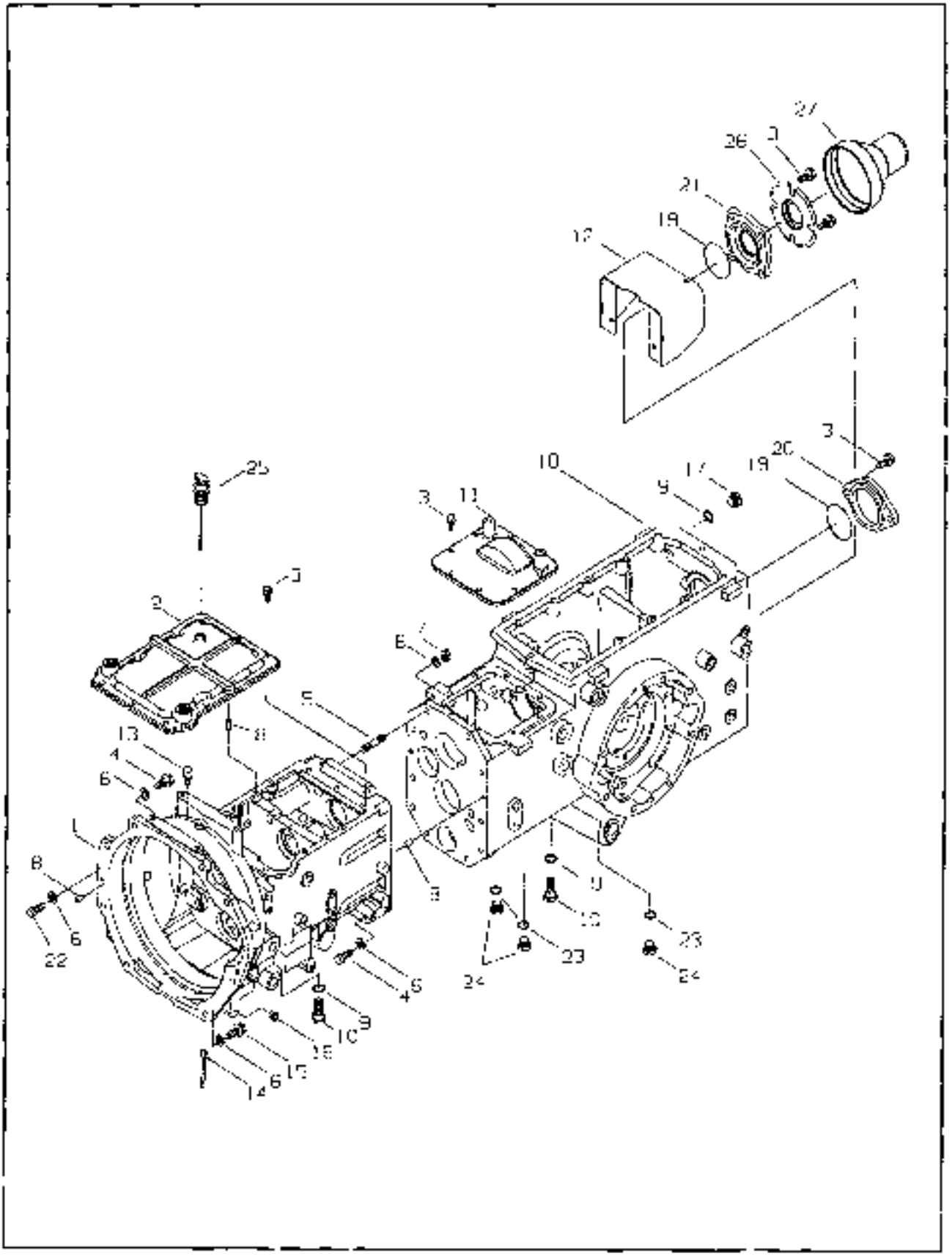

06-04-01 01

TRANSMISSION CASE

FIG. 3-4B (INDP, PTO1)

NO.	PART NO.	PART NAME & DESCRIPTION		QTY A	QTY B	QTY C	APP.NO	REM.
1	20020403	HOUSING-CLUTCH-TRG250		1	*	1		
2	40009019	COVER-CLUTCH HSG-TRG292		1	*	1		
3	40028948	BOLT-HEX WWS-S154102533	M10x1.25x25L	24	*	24		
4	40028871	BOLT-HEX-S105125543	M12x1.75x35L	14	*	14		
5	40028903	BOLT-STUD-S139123523	M12x1.75x35L	2	*	2		
6	40020551	WASHER-SPR-S301120013	OD21.5xID12.3x3t	19	*	19		
7	40020771	NUT HEX 2 TY-S305120013	M12x1.75	2	*	2		
8	40020102	PIN-PAR-S423102010	ID10x20	6	*	6		
9	40012421	SEAL-PLUG-TRG250	OD20xID26x1.5t	3	*	3		
10	40012624	PLUG-DRAIN-TRG250		2	*	2		
11	40009431	COVER-AXLE CASE-TRG280		1	*	1		
12	40049470	SHIELD-PTO-TRG280		1	*	1		
13	40039792	PLUG-AIR BENT-TRG250		1	*	1		
14	40012217	PIN-SPLIT-TRG250	D12	1	*	1		
15	40028873	BOLT-HEX-S105124543	M12x1.75x40L	2	*	2		
16	40007322	PLUG-RUBBER-TRG970		6	*	6		
17	40012897	PLUG DRAIN A0610281		1	*	1		
18	20020406	CASE-AXLE-TRG280		1	*	1		
19	40029254	O-RING-S804070010	D69.5xW2.0	2	*	2		
20	40009839	COVER-PTO DRV SHAFT-TRG280		1	*	1		
21	40010161	COVER-PTO SHAFT-TRG280		1	*	1		
22	40028875	BOLT-HEX-S105125543	M12x1.25x55L	1	*	1		
23	40012761	GASKET-Q0650006	OD26xID18x1.0t	3	*	3		
24	40009940	PLUG-DRAIN-TRG280	M18x1.5	3	*	3		
25	40007442	GAUGE-OIL LEVEL-TRG280		1	*	1		
26	40011812	GUIDE PTO COVER-TRG280		1	*	1		
27	40012874	COVER-A05171520		1	*	1		

MAIN SHAFT

FIG. 3-5B G. 281

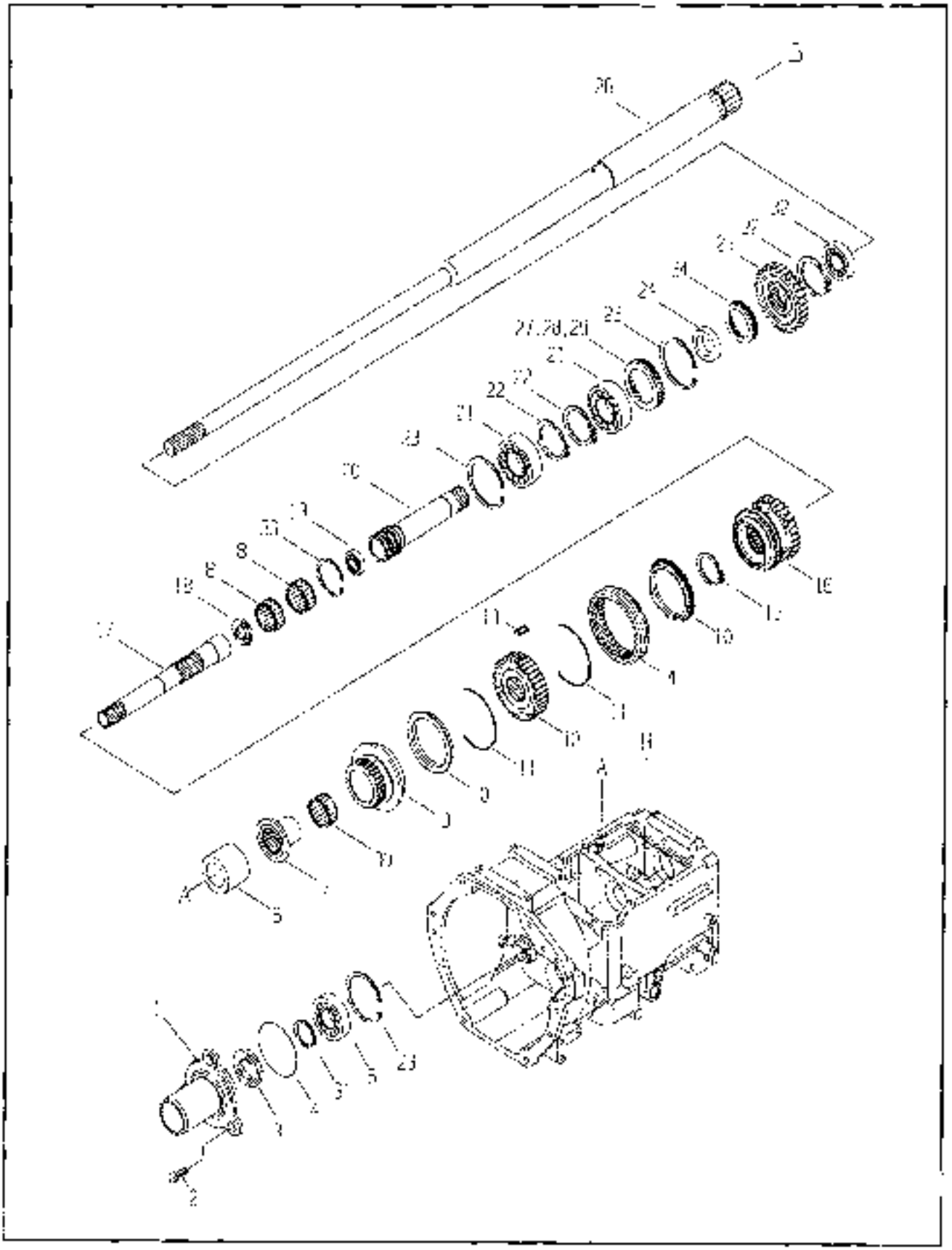

06-04-01 00

FIG. 3-5B

(INDP, PTO1)

NO.	PART NO	PART NAME & DESCRIPTION		QTY A	QTY B	QTY C	APP NO	REM.
1	40010257	COVER-MAIN SHAFT-TRG280		1	*	1		
2	40028947	BOLT-HEX W/WS-S15410203	M10x1.25x30	3	*	3		
3	40012602	SEAL-OIL-A0651302	TC30x45x10(30x45)	1	*	1		
4	40028252	O-RING-S80105001	S30(30x3W2.0)	1	*	1		
5	40012706	BEARING-BALL-A0862060	6203(ID6xID30x16)	1	*	1		
6	40010046	SPACER-TRG281	OD40xID30x27L	1	*	1		
7	40010053	SLEEVE-TRG281		1	*	1		
8	40027820	BEARING-NEEDLE ROLLER-TRG281	OD40xID35x13	2	*	2		
9	40009135	GEAR-M/SHIFT-TRG281		1	*	1		
10	40009141	RING-SYNCHRON ZER-TRG281		2	*	2		
11	40012535	SPRING-TRG281		2	*	2		
12	40009128	HUB-SHIFT-TRG281		1	*	1		
13	40009140	PIECE-TRG281		3	*	3		
14	40009384	SLEEVE-SHIFT-TRG281		1	*	1		
15	40029274	RING-SNAP-S81003z001	D32x1.2t	1	*	1		
16	40009153	GEAR-M/SHIFT DRV-TRG281		1	*	1		
17	40009405	SHAFT-M/SHIFT-TRG281		1	*	1		
18	40012689	SEAL-OIL-A0851201	TC20x37x10(20x37x)	1	*	1		
19	40012772	BEARING-BALL-A0858040	#6304(OD52xID20x7)	1	*	1		
20	40009409	SHAFT-REVERSE DRV-TRG281		1	*	1		
21	40012725	BEARING-BALL-A0858080	#6008(OD62xID40x12)	2	*	2		
22	40029277	RING-SNAP-S81004z001	D40x1.75t	3	*	3		
23	40029209	RING-SNAP-S81106z001	D62x2t	3	*	3		
24	40010077	SPACER-TRG281	OD48xID43x10.5	1	*	1		
25	40009500	GEAR-FIN DRV-TRG281		1	*	1		
26	40009022	SHAFT-MAIN PTO-TRG283		1	*	1		
27	40012834	LINER-A0870481	OD50xID61x0.15t	1	*	1		
28	40012835	LINER-A0870482	OD50xID61x0.2t	1	*	1		
29	40012848	LINER-A0870405	OD50xID61x0.5t	1	*	1		
30	40009899	BEARING-NEEDLE-TRG970	OD40xID40x27	1	*	1		
31	40029273	RING-SNAP-S81000z001	D30x1.5t	1	*	1		
32	40012723	BEARING-BALL-A0868041	#6004(OD42xID20x7)	1	*	1		
33	40029292	RING-SNAP-S81103z001	D32x1.2t	1	*	1		
34	40012878	LINER-A0870461	OD51xID41x0.15t	2	*	2		
	40012929	LINER-A0870462	OD51xID41x0.2t	1	*	1		

MAIN GEAR SHAFT

FIG. 3-6A **G. 281**

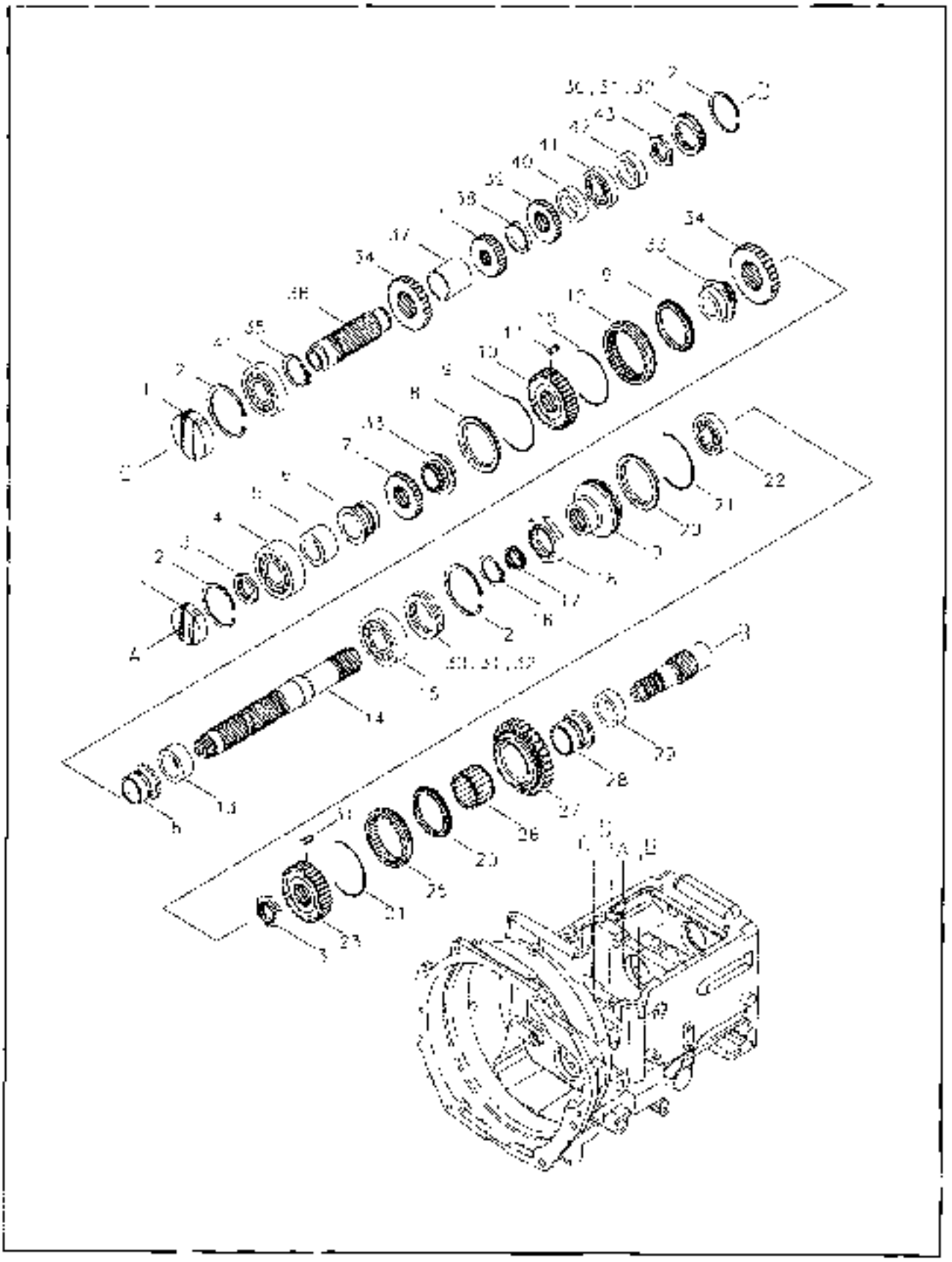

MAIN GEAR SHAFT

FIG. 3-6A

NO	PART NO	PART NAME & DESCRIPTION		QTY A	QTY B	QTY C	APP.NO	REM
1	40007516	CAP-DRVN SHAFT-TRG283	D82	2	*	2		
2	40029299	RING-SNAP-S811062001	D66.2x2t	4	*	4		
3	40009934	NUT-LOCK-TRG281	M25x1.5	2	*	2		
4	40012706	BEARING-BALL-A0867060	#6208	1	*	1		
5	40009702	SPACER-TRG281	OD45xID33x30	1	*	1		
6	40010230	SLEEVE-TRG281		2	*	2		
7	40010113	GEAR-M/SHIFT-TRG281		2	*	2		
8	40009141	RING-SYNCHRONIZER-TRG281		2	*	2		
9	40012536	SPRING-TRG281		2	*	2		
10	40009428	HUB-SHIFT-TRG281		1	*	1		
11	40009946	PIECE-TRG281		3	*	3		
12	40009384	SLEEVE-SHIFT-TRG281		2	*	2		
13	40009704	SPACER-TRG281	OD33xID45x30	1	*	1		
14	40009267	SHAFT-M/SHIFT 3RD-TRG281		1	*	1		
15	40012916	BEARING-BALL-A0860070	#6007(OD62xID35x14)	1	*	1		
16	40029274	RING-SNAP-S810032001	D29.6x1.2t	1	*	1		
17	40010070	SLEEVE-TRG281		1	*	1		
18	40012790	NUT-LOCK-A0610282	M42x1.5	1	*	1		
19	40009303	HUB-SYNC-CLUTCH-TRG281	D85x65	1	*	1		
20	40009156	RING-SYNCHRONIZER-TRG281		2	*	2		
21	40012135	SPRING-SYNCHRONIZER-TRG281		2	*	2		
22	40012696	BEARING-BALL-A0860040	#6004(OD42xID20x12)	1	*	1		
23	40009360	HUB-SHIFT-TRG281		1	*	1		
24	40009844	STRUT-SYNC-TRG281		3	*	3		
25	40009053	SLEEVE-SHIFT-TRG281		1	*	1		
26	40009699	BEARING-NEEDLE-TRG970	OD45xID40x27	1	*	1		
27	40009224	GEAR-F/R DRVN-TRG281		1	*	1		
28	40010338	SLEEVE-GEAR-TRG281		1	*	1		
29	40009705	SPACER-TRG281	OD45xID35x9.5	1	*	1		
30	40012834	LINER-A0870481	OD50xID61x0.15t	AR	*	AR		
31	40012835	LINER-A0870482	OD50xID61x0.2t	AR	*	AR		
32	40012848	LINER-A0870485	OD50xID61x0.5t	AR	*	AR		
33	40009379	SLEEVE-W/SYNC-TRG281		2	*	2		
34	40009800	GEAR-M/SHIFT-TRG281		2	*	2		
35	40029280	RING-SNAP-S810050001	D50x2t	1	*	1		
36	40009427	SHAFT-M/SHIFT 2ND-TRG281		1	*	1		
37	40010297	SPACER-TRG281	OD57x1Dx50x44.5L	1	*	1		
38	40010240	SPACER-TRG281	OD57x1D 50x7t	1	*	1		
39	40009771	GEAR-M/SHIFT-TRG281		1	*	1		
40	40010208	SPACER-TRG281	OD52x1D 40x11.8L	1	*	1		
41	40012725	BEARING-BALL-A0869080		2	*	2		
42	40010079	SPACER-TRG281	OD48x1D 40x11.8L	1	*	1		
43	40009936	NUT-LOCK-TRG287	M35x1.5	1	*	1		

MAIN GEAR SHAFT

FIG. 3-6B **G. 281**

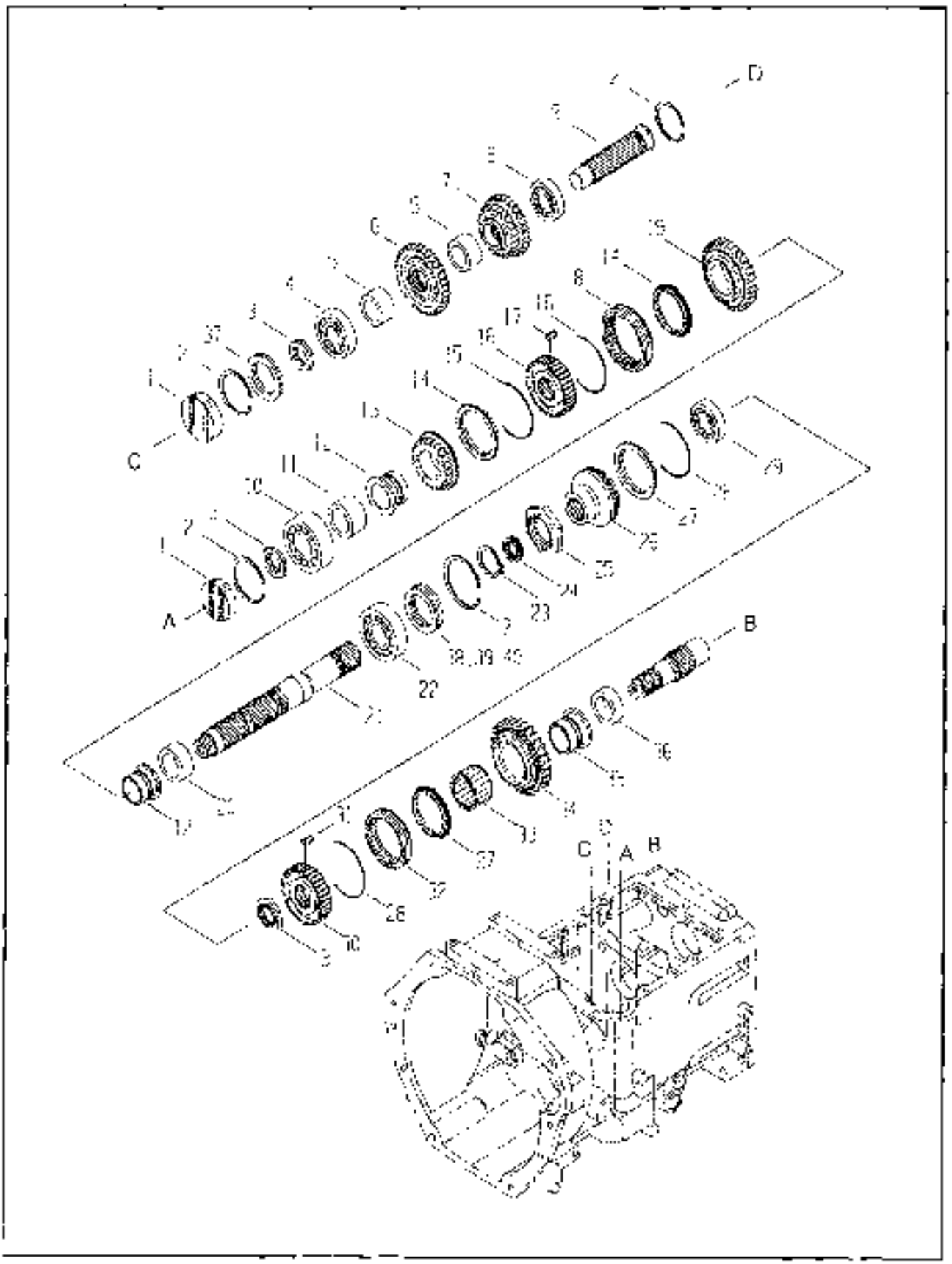

06-04-01 01

MAIN GEAR SHAFT

FIG. 3-6B

NO.	PART NO	PART NAME & DESCRIPTION		QTY A	QTY B	QTY C	APP NO	ITEM
1	40007516	CAP-DRVN SHAFT-TRG283	D62	*	2	*		
2	40029299	RING-SNAP-581105200	D66.2x2t	*	4	*		
3	40009934	NUT-LOCK-TRG281	M25x1.5	*	2	*		
4	40012715	BEARING-BALL-A0660050	60853	*	1	*		
5	40009686	SPACER-TRG281	OD42.7xID30X32	*	2	*		
6	40009798	GEAR-M/SHIFT-TRG281		*	1	*		
7	40009151	GEAR M/SHIFT-TRG281		*	1	*		
8	40012706	BEARING-BALL-A0662060	62/06	*	1	*		
9	40009103	SHAFT-M/SHIFT 2ND-TRG281		*	1	*		
10	40012706	BEARING-BALL-A0662060	6206(OD62xID30x16)	*	1	*		
11	40009702	SPACER-TRG281	OD45xID33x30	*	1	*		
12	40010220	SLEEVE-TRG281		*	2	*		
13	40009147	GEAR-M/SHIFT DRVN-TRG281		*	1	*		
14	40009141	RING-SYNCHRONIZER-TRG281		*	2	*		
15	40012536	SPRING-TRG281		*	2	*		
16	40009128	HUB-SHIFT-TRG281		*	1	*		
17	40009146	PIN-CF-TRG281		*	3	*		
18	40009084	SLEEVE-SHIFT-TRG281		*	2	*		
19	40009169	GEAR-M/SHIFT DRVN-TRG281		*	1	*		
20	40009704	SPACER-TRG281	OD33xID45x30	*	1	*		
21	40009267	SHAFT-M/SHIFT 3RD-TRG281		*	1	*		
22	40012916	BEARING-BALL-A0660070	W6007(OD62xID35x14)	*	1	*		
23	40029274	RING-SNAP-581003001	D28.6x1.2t	*	1	*		
24	40010070	SLEEVE-TRG281		*	1	*		
25	40012790	NUT-LOCK-A0610282	M42x1.5	*	1	*		
26	40009002	HUB SYNC CLUTCH TRG281	D85x63	*	1	*		
27	40009150	RING-SYNCHRONIZER-TRG281		*	2	*		
28	40012135	SPRING-SYNCHRONIZER-TRG281		*	2	*		
29	40012896	BEARING-BALL-A0660040	W604(OD42xID20x12)	*	1	*		
30	40009550	HUB-SHIFT-TRG281		*	1	*		
31	40009644	STRUT-SYNC-TRG281		*	3	*		
32	40009053	SLEEVE-SHIFT TRG281		*	1	*		
33	40009699	BEARING-NEEDLE TRG970	OD45xID40x27	*	1	*		
34	40009224	GEAR-F/R DRVN-TRG281		*	1	*		
35	40010338	SLEEVE-GEAR-TRG281		*	1	*		
36	40009705	SPACER TRG281	OD45xID35x9.5	*	1	*		
37	40012873	LINER-A0670488		*	2	*		
38	40012834	LINER-A0870481	OD50xID61x3.15t	*	AR	*		
39	40012835	LINER-A0870482	OD50xID61x0.2t	*	AR	*		
40	40012848	LINER-A0870485	OD50xID61x3.5t	*	AR	*		

U6-04-C1

00

RANGE SHIFT SHAFT

FIG. 3-7B **G. 285**

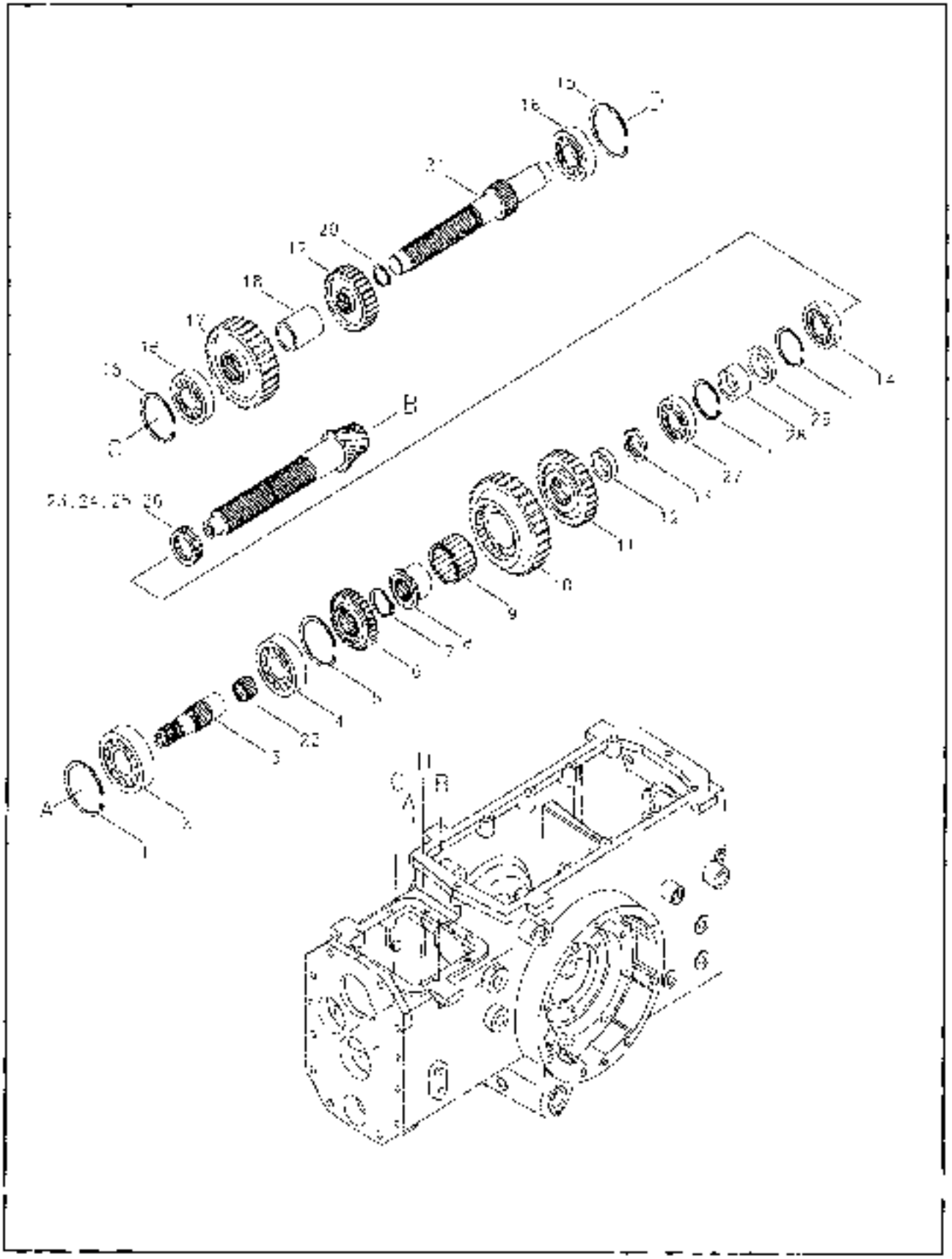

RANGE SHIFT SHAFT

FIG. 3-7B

(PTO1)

NO.	PART NO.	PART NAME & DESCRIPTION		QTY A	QTY B	QTY D	APP.NO	REM
1	40029331	RING-SNAP-S811372001	D70.5x2.5t	3	3	3		
2	40012739	BEARING-BALL-A0680070	6207(OD72xID35x17)	1	1	1		
3	40009368	SHAFT-RANGE-TRG285		1	1	1		
4	40012556	BEARING-BALL-A0660080	6005(OD68xID40x15)	1	1	1		
5	40029300	RING-SNAP-S811368001	D72.5x2.5t	1	1	1		
6	40009152	GEAR-RANGE SELECTOR-TRG285		1	1	1		
7	40029274	RING-SNAP-S810032001	D29.8x1.5t	1	1	1		
8	40010062	SLEEVE-FIR-TRG281		1	1	1		
9	40009699	BEARING-NEEDLE-TRG370	OD45xID40x27	1	1	1		
10	40009340	GEAR-LOW DRVN-TRG285		1	1	1		
11	40010745	GEAR-4WD DRV-TRG298		1	1	1		
12	40009705	SPACER-TRG281	OD45xID35x9.5	1	1	1		
13	40009936	NUT-LOCK-TRG287	M35x1.5	1	1	1		
14	40007936	BEARING-TAPER(#32207C)-TRG320	#32207C(OD72xID35x27)	1	1	1		
15	40029299	RING-SNAP-S811062001	D66.2x2t	2	2	2		
16	40012715	BEARING-BALL-A0680050	6005(OD62xID25x17)	2	2	2		
17	40009065	GEAR-RANGE DRVN-TRG285		1	1	1		
18	40009959	SPACER-TRG285	D35x1.5t	1	1	1		
19	40010122	GEAR-RANGE DRV-TRG285		1	1	1		
20	40029273	RING-SNAP-S810030001	D27.9x1.5t	1	1	1		
21	40009115	SHAFT-RANGE DRV-TRG285		1	1	1		
22	40030211	BEARING-NEEDLE-TRG970	K20x28x20	1	1	1		
23	40012946	LINER-A0670451	OD46xID36x0.15t	1	1	1		
24	40012925	LINER-A0670452	OD46xID36x0.2t	1	1	1		
25	40012926	LINER-A0670455	OD46xID36x0.5t	1	1	1		
26	40012927	LINER-A0670456	OD46xID36x1.0t	1	1	1		
27	40007933	BEARING-TAPER(#33207J)-TRG320		1	1	1		
28	40010146	SPACER-TRG320		1	1	1		
29	40030593	SPACER-TRG320		1	1	1		

PTO SHAFT

FIG. 3-9B **G. 287**

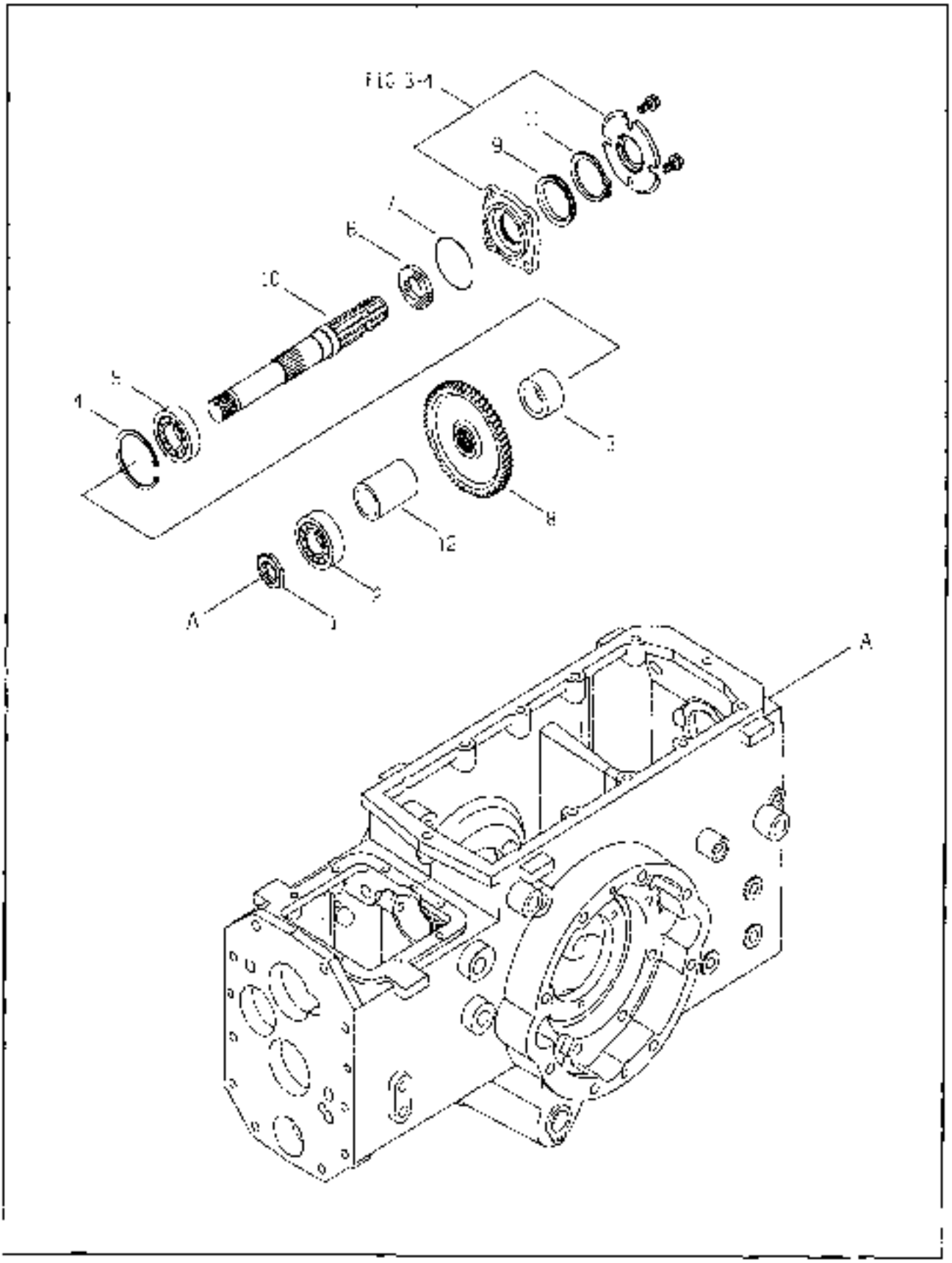

FIG. 3-9B

(PTO1)

NO.	PART NO	PART NAME & DESCRIPTION		QTY A	QTY B	QTY C	APP NO	REM.
1	40009545	NUT-LOCK-TRG287	M30x1.5	1	*	1		
2	40012716	BEARING BALL-A0069060	#6305(OD72xID30x19)	1	*	1		
3	40040233	SPACER-TRG781	OD50xID33x44.5L	1	*	1		
4	40029301	RING-SNAP-S8110723C1	D72x2.6t	1	*	1		
5	40017709	BEARING-BALL-A0062070	#6207(OD72xID35x17)	1	*	1		
6	40007917	SEAL-OIL-TRG287	OD62xID40x11.5	1	*	1		
7	40029254	O-RING-S8040730010		1	*	1		
8	40009071	GEAR PTO DRVN 1ST TRG287		1	*	1		
9	40012824	SEAL-DUST-A0053732		1	*			
10	40009385	SHAFT-PTO-TRG287		1	*	1		
11	40029276	RING-SNAP-S8100961C1		1	*	1		
12	40010059	SPACER-TRG287	OD42xID33x87L	1	*	1		

PTO DRIVE SHAFT

FIG. 3-10B **G. 283, 287**

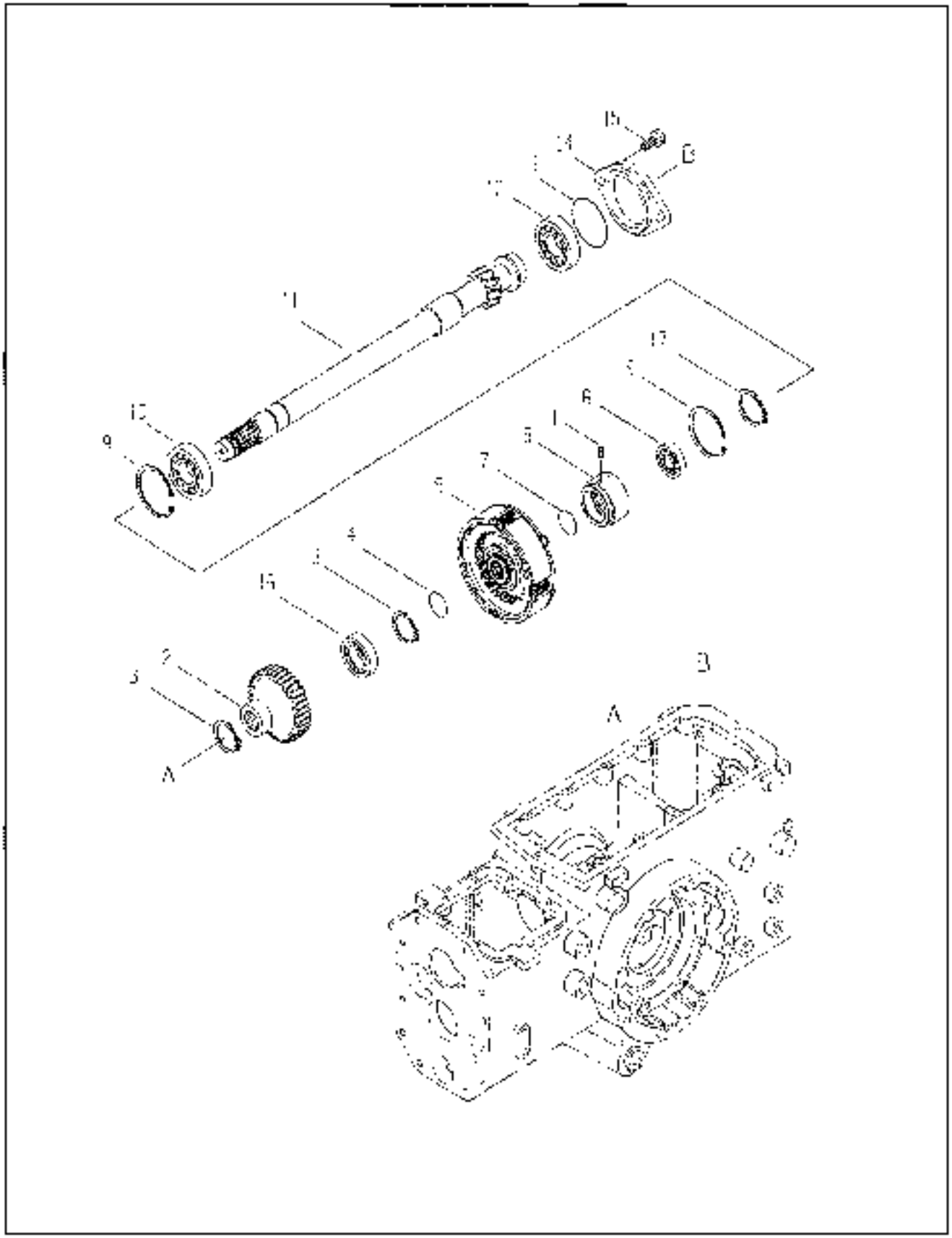

FIG. 3-10B

(1NDP, PTO1)

NO	PART NO	PART NAME & DESCRIPTION		QTY A	QTY B	QTY C	APP. NO	REM.
1	40020582	SCREW SET SOC S202032021	M8x1.25x20L	1	*	1		
2	40040290	HUB PTO CLUTCH-TRG283		1	*	1		
3	40029773	RING-SNAP-S810022001	D22x1.2t	2	*	2		
4	40029242	O-RING-S804020010	S20(D20xW1.5)	1	*	1		
5	40007734	CLUTCH ASSY-PTO-TRG287		1	*	1		
6	40042697	BEARING-BALL-A0863050	#6005(OD47xID25x12)	1	*	1		
7	40012098	RING-SEAL-TRG261	D25x2.5	1	*	1		
8	40009435	SLEEVE-HYD CIRCUIT-TRG283		1	*	1		
9	40029299	RING SNAP S811062001	D62x2t	2	*	2		
10	40012715	BEARING-BALL-A0863050	#6305(OD62xID25x17)	1	*	1		
11	40009035	SHAFT-PTO DRV-TRG287		1	*	1		
12	40042718	BEARING-BALL-A0863080	#6306(OD72xID30x19)	1	*	1		
13	40029254	O-RING-S804070010	S70(D70xW2.0)	1	*	1		
14	40009839	COVER-PTO DRV SHAFT-TRG280		1	*	1		
15	40028948	BOLT HEX W/WS S154102503	M10x1.25x25L	2	*	2		
16	40012638	BEARING-BALL-A0863041	#6004(OD42xID20x12)	1	*	1		
17	40029275	RING SNAP-S810025001	D25x1.2t	1	*	1		

FIG. 3-12 **G. 288, 380**

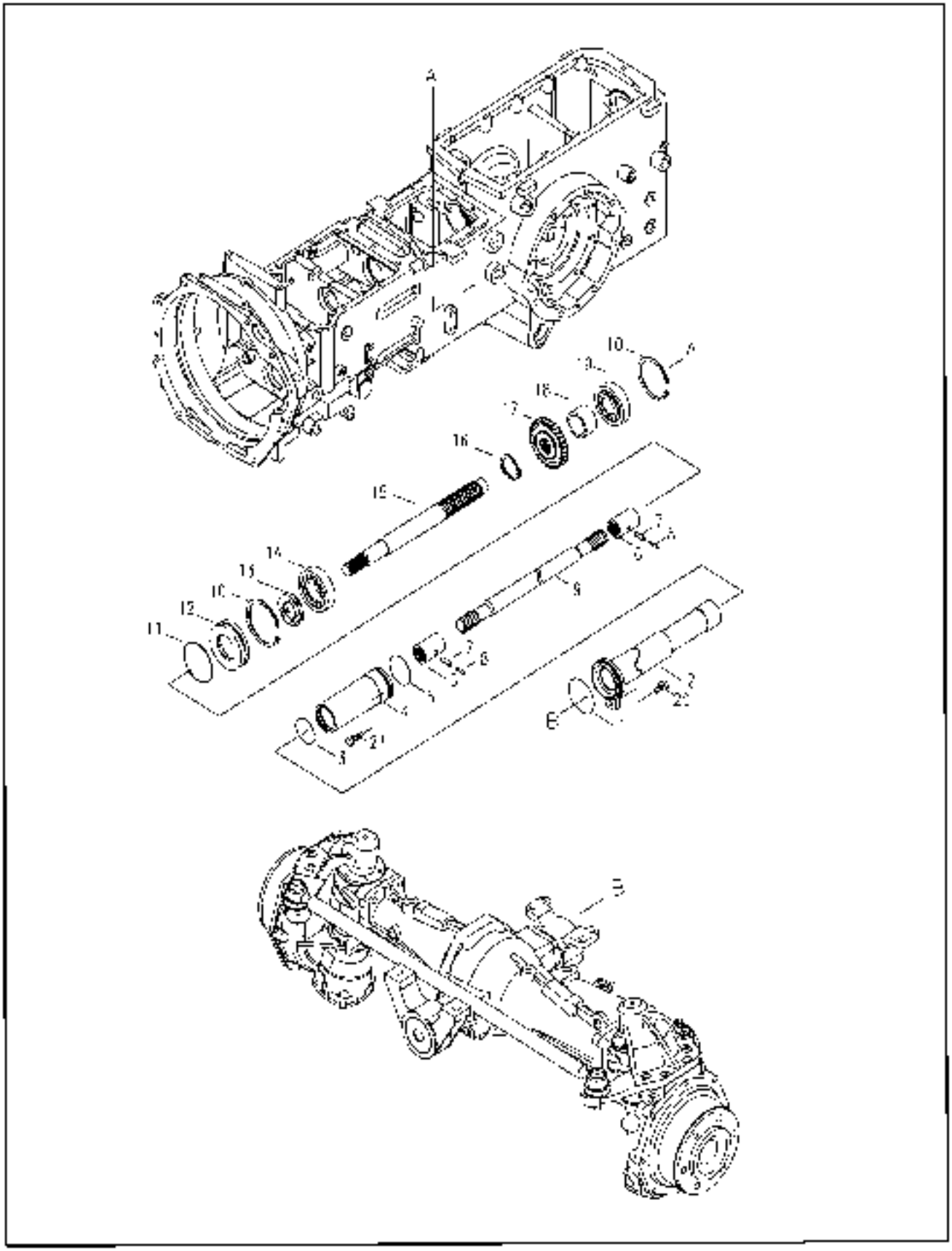

FRONT WHEEL DRIVE

FIG. 3-12

NO.	PART NO.	PART NAME & DESCRIPTION		QTY A	QTY B	QTY C	APP. NO	REM
1	40029225	O-RING-S802060010	D50.4xW3.1	1	1	1		
2	40012248	COVER-4WD FRONT-TRG380		1	1	1		
3	40029222	O-RING-S802040010	G40(D30.4xW3.1)	1	1	1		
4	40012484	COVER-4WD REAR TRG380		1	1	1		
5	40029217	O-RING-S801046010	D45.7xW3.5	1	1	1		
6	40010214	JOINT-4WD-TRG288		2	2	2		
7	40029162	PIN-SPRING-S440053210	D5x32	2	2	2		
8	40029153	PIN-SPRING-S440033210	D3x32	2	2	2		
9	40009401	SHAFT-4WD FRONT-TRG288		1	1	1		
10	40029298	RING SNAP-S911052001	D56.2x2t	2	2	2		
11	40029217	O-RING-S801046010	D45.7xW3.5	1	1	1		
12	40010094	HOUSING-SEAL-TRG288	D52	1	1	1		
13	40012884	SEAL-OIL-A0651253	TC25-3(OD40xID25x8)	1	1	1		
14	40012703	BEARING BALL-A0862050	M6205(OD52xID25x15)	1	1	1		
15	40009357	SHAFT-4WD-TRG288		1	1	1		
16	40029273	RING-SNAP-S910030001	D27.9x1.5t	1	1	1		
17	40009222	GEAR-4WD DRVN TRG288		1	1	1		
18	40010027	SPACER-TRG288	OD25xID35x25L	1	1	1		
19	40012705	BEARING-BALL-A0862052	M6205(OD52xID25x15)	1	1	1		
20	40029923	BOLT-HEX W/WS-S153082533	M8x1.25	1	1	1		
21	40029947	BOLT-HEX W/WS-S154102033	M10x1.25	1	1	1		

SHIFT LEVER & FORK

FIG. 3-13 **G. 290, 292**

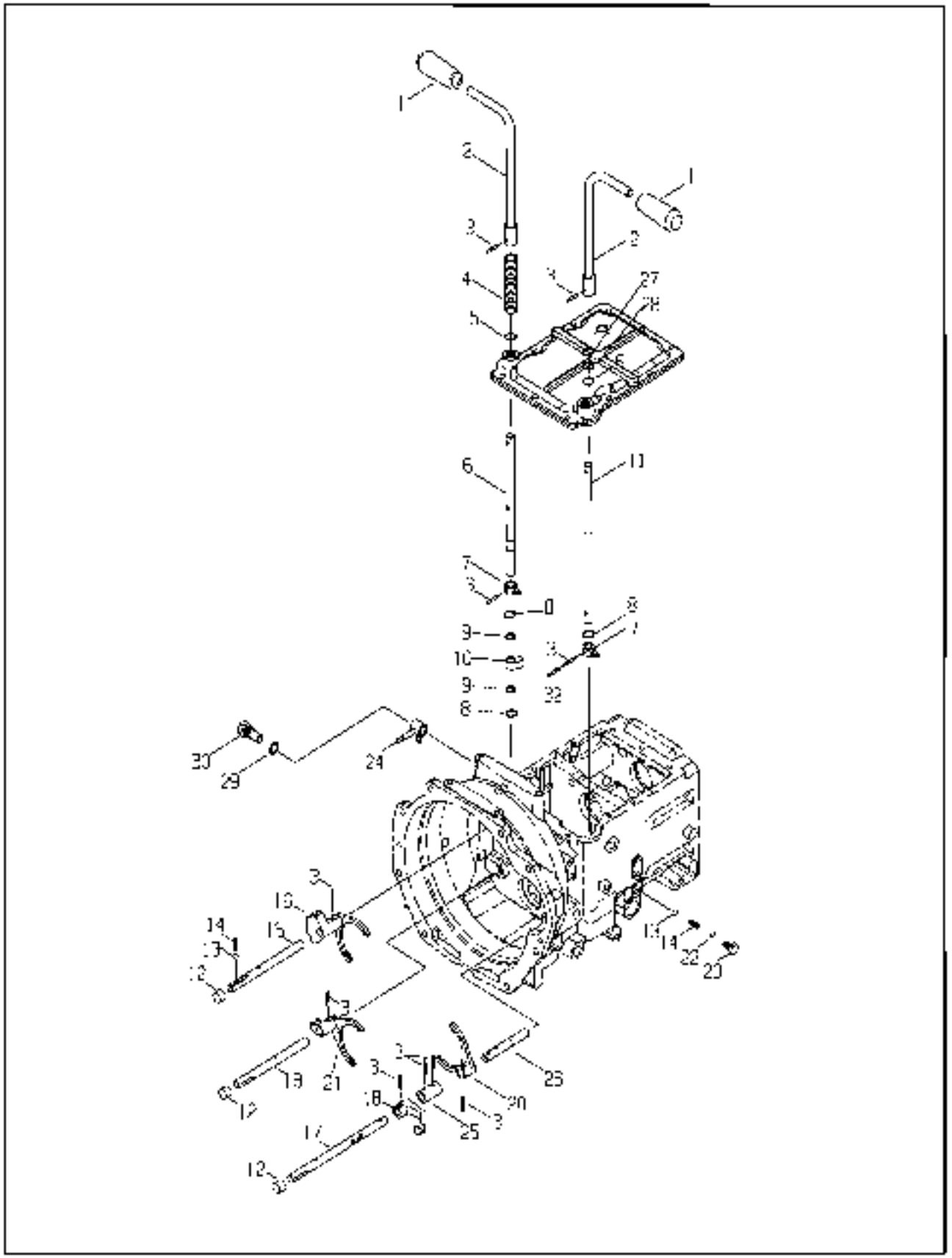

04-05-01 00

SHIFT LEVER & FORK

FIG. 3-13

NO.	PART NO.	PART NAME & DESCRIPTION		QTY A	QTY B	QTY C	APP NO	FEM
1	40008438	GRIP-PLASTIC-TRG970		2	2	2		
2	40042634	LEVER-SHIFT HAND-TRG292		2	2	2		
3	40020167	PIN-SPRING-S440062510	D6x25	10	10	10		
4	40011942	SPRING-TRG292		1	1	1		
5	40020204	O-RING-S801016010	D15.8xW2.4	2	2	2		
6	40010287	LEVER M/SHIFT-TRG290		1	1	1		
7	40010262	ARM-M/SHIFT#1-TRG290		2	2	2		
8	40029261	RING-SNAP-S610016001	D14.7x1.0	3	3	3		
9	40012815	WASHER-A0560026	D15	6	6	6		
10	40010261	ADAPTOR-M/SHIFT-TRG290		1	1	1		
11	40009442	LEVER F/R TRG290		1	1	1		
12	40042282	CAP-RAIL-TRG290		3	3	3		
13	40030329	BALL-SHIFT FORK-CVG000	(11/32)	2	2	2		
14	40011943	SPRING-TRG290		2	2	2		
15	40010208	RAIL-M/SHIFT#1-TRG290		1	1	1		
16	40009441	FORK-M/SHIFT#1-TRG290		1	1	1		
17	40009344	RAIL-F/R-TRG290		1	1	1		
18	40010166	ADAPTOR-F/R-TRG290		1	1	1		
19	40009533	RAIL-M/SHIFT 2ND-TRG290		1	1	1		
20	40010283	FORK-F/R-TRG290		1	1	1		
21	40009429	FORK-M/SHIFT 2ND-TRG290		1	1	1		
22	40029198	O-RING-S801010A10	D9.8xW2.4	1	1	1		
23	40009456	BOLT-RAIL-TRG291	M12x1.75x23L	1	1	1		
24	40010010	ARM-M/SHIFT 2ND-TRG290		1	1	1		
25	40009550	JOINT-F/R-TRG290		1	1	1		
26	40010294	RAIL-F/R 2ND-TRG290		1	1	1		
27	40029324	RING-SNAP-S614015001	D15x1.5t	1	1	1		
28	40026178	WASHER-PLN-S364160013	OD30xID17x3.01	1	1	1		
29	40012421	SEAL PLUG-TRG290		1	1	1		
30	40010278	BOLT-ARM SHAFT-TRG290		1	1	1		

04.06.01 00

SHIFT LEVER & FORK

FIG. 3-14B

G. 290, 292

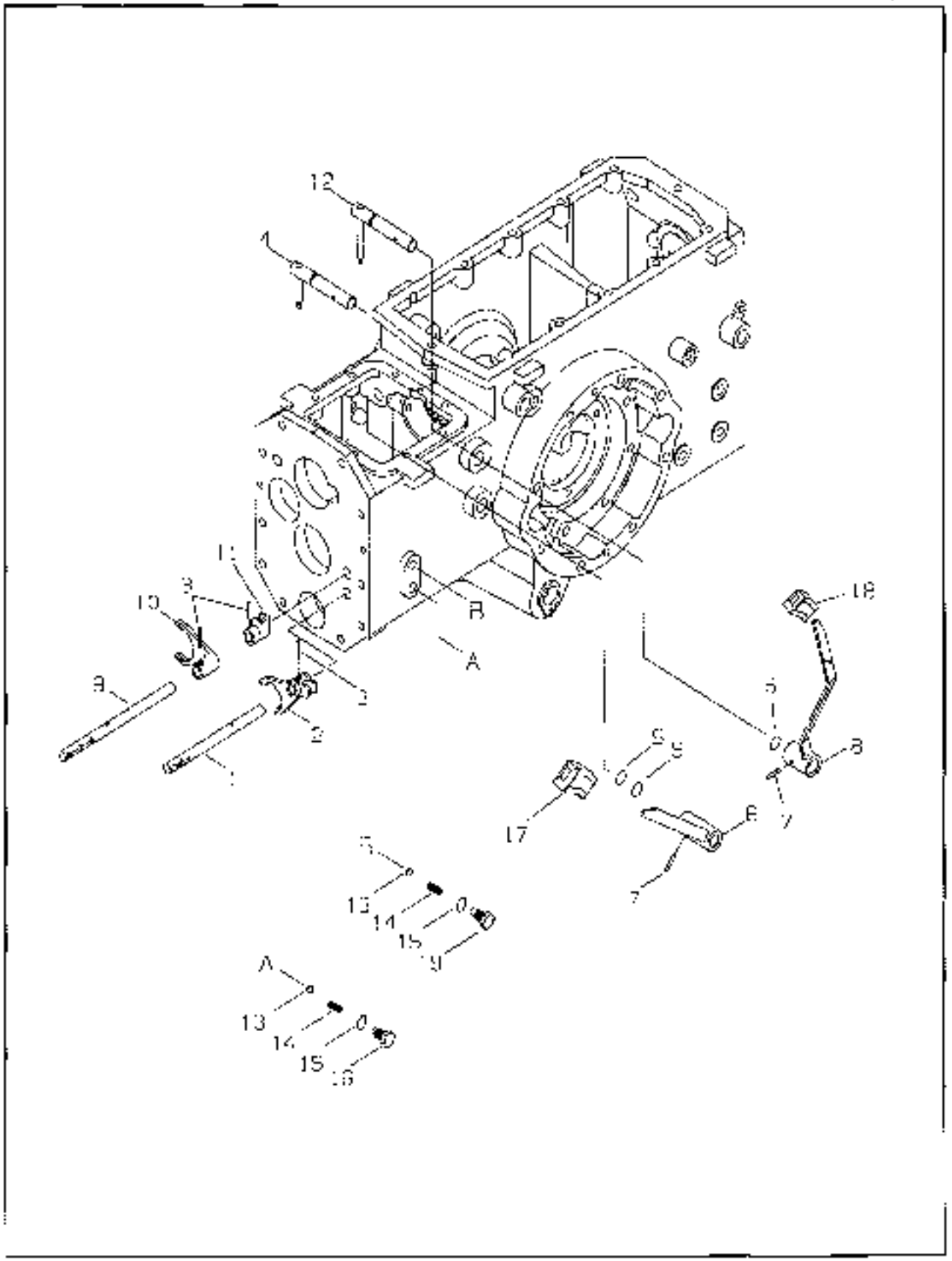

FIG. 3-14B

(PTO1)

NO	PART NO	PART NAME & DESCRIPTION		QTY A	QTY B	QTY C	APP.NO	REV.
1	40010313	RAIL-4WD-TRG291		1	1	1		
2	40009415	FORK-4WD-TRG291		1	1	1		
3	40029167	PIN-SPRING-S146067510	D6x25	3	3	3		
4	40012574	LEVER-4WD-TRG291		1	1	1		
5	40029204	O-RING-S80*D16C10	D15.8xW2.4	3	3	3		
6	40012582	LEVER-4WD-TRG293		1	1	1		
7	40029172	PIN-SPRING-S146083512	D6x35	3	3	3		
8	40011775	LEVER-RANGE HAND-TRG292		1	1	1		
9	40010331	RAIL-RANGE-TRG291		1	1	1		
10	40009315	FORK-RANGE-TRG291		1	1	1		
11	40010270	ADAPTOR-RANGE-TRG291		1	1	1		
12	40012487	LEVER-RANGE01-TRG291		1	1	1		
13	40010339	BALL-SHIFT FORK-CVG000	(11/32)	2	2	2		
14	40011943	SPRING-TRG293		2	2	2		
15	40029156	O-RING-S80*D10A10	D9.8xW2.4	2	2	2		
16	40009498	BOLT-RAIL-TRG291	M10x1.75	1	1	1		
17	40008375	KNOB-HYD LIFT LEVER-TRG970		1	1	1		
18	40008377	KNOB-SJB SHIFT-TRG970		1	1	1		
19	40008801	BOLT-RAIL-TRG291	M12x1.75	1	1	1		

DIFF-LOCK

FIG. 4-1 G. 310

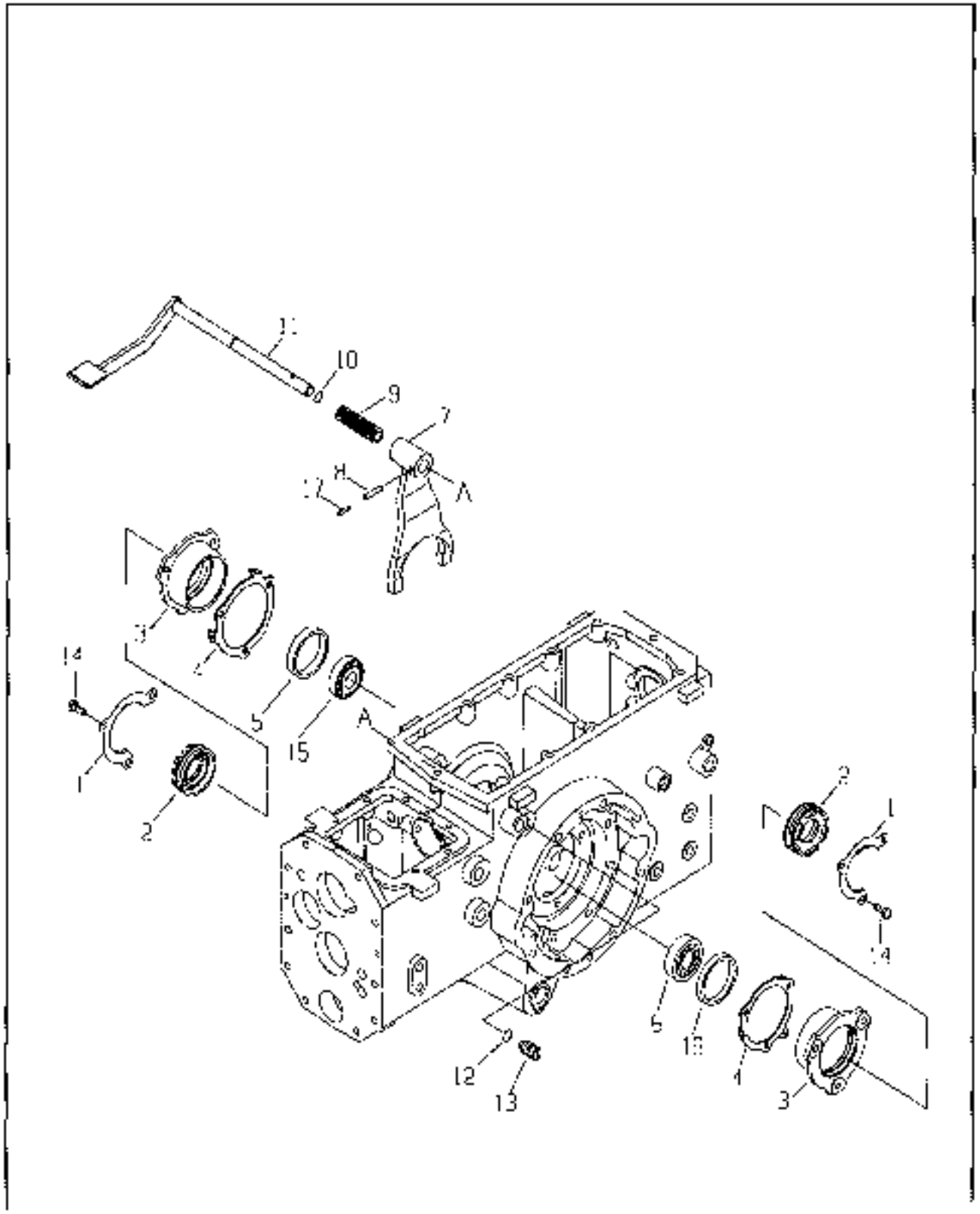

06 08-01 02

FIG. 4-1

NO.	PART NO.	PART NAME & DESCRIPTION		QTY A	QTY B	QTY C	APP NO	REM.
1	40011927	PLATE-LOCK-TRG320		2	2	2		
2	40010125	SCREW-TRG320		2	2	2		
3	40010179	SUPPORT-DIFF-TRG320		2	2	2		
4	40012629	HOLDER-SPRING(LH)-TRG650		2	2	2		
5	40009785	SPACER-TRG320	OD89.4xID77x14	1	1	1		
6	40012713	BEARING-BALL-A0862100	[illegible]	1	1	1		
7	40009322	FORK-DIFF LOCK-TRG320		1	1	1		
8	40020179	PIN-SPRING-S4460640412	D6x40	1	1	1		
9	40011981	SPRING-DIFF-TRG320		1	1	1		
10	40020204	O-RING-S8010310010	D15.6xW2.4	1	1	1		
11	40011258	SHAFT-DIFF PEDAL-TRG320		1	1	1		
12	40020208	O-RING-S8010210010	D20.6xW2.4	1	1	1		
13	40009872	SCREW-ADJUST-TRG320	M22x1.5	1	1	1		
14	40029523	BOLT HEX FT S1064002543	M10x1.25	6	6	6		
15	40010341	BEARING-TAPER-CVG020	[illegible]	1	1	1		
16	40009709	SPACER-TRG320	OD89.4xID77x8	1	1	1		
17	40020164	PIN-SPRING-S4460640412	D6x40	1	1	1		

REAR DIFERENTIAL

FIG. 4-2 G. 320

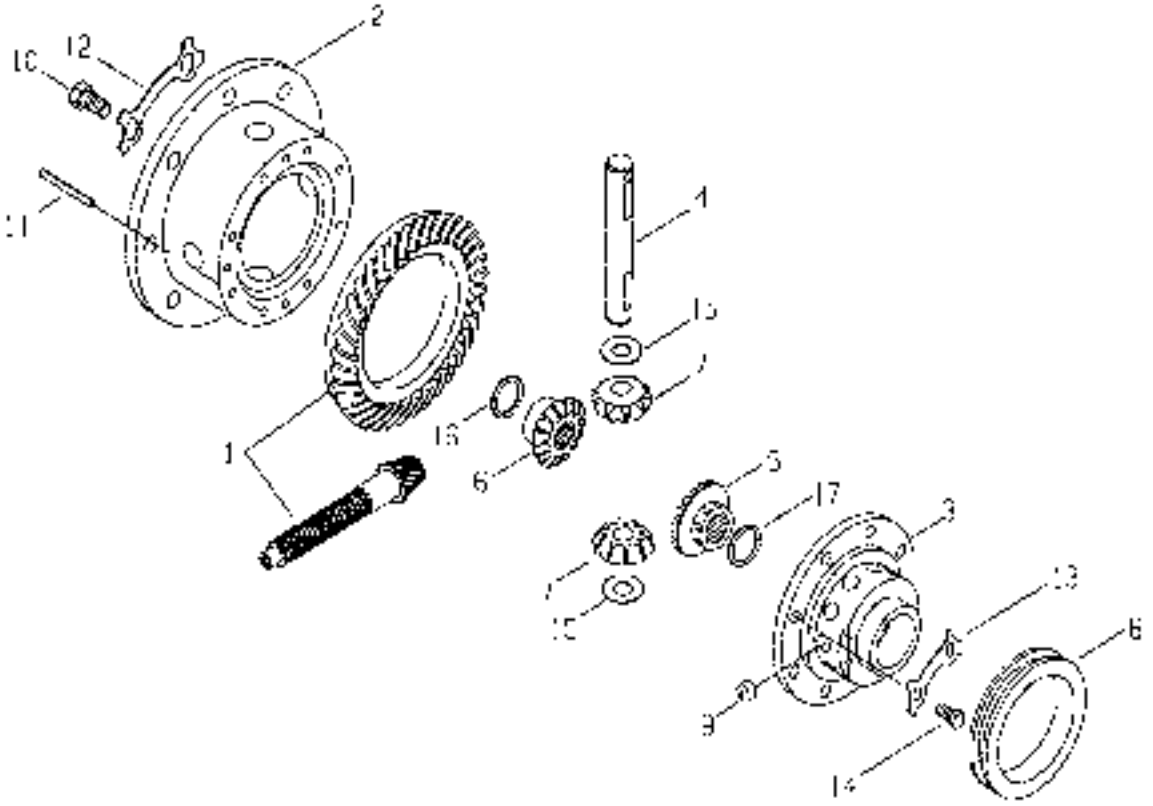

08-04-21 01

FIG. 4-2

NO.	PART NO.	PART NAME & DESCRIPTION		QTY A	QTY B	QTY C	APP.NO	REM
1-17	40190286	DIFF ASSY-REAR-G310		1	1	1		
1	40013074	PINION+RING-GEAR SET G310		1	1	1		
2	40008994	CASE-DIFF(1)-TRG310		1	1	1		
3	40009434	CASE-DIFF(2)-TRG310		1	1	1		
4	40010205	SHAFT-(1)-TRG310		1	1	1		
5	40009870	GEAR DIFF SIDE(LH) TRG310	16t	1	1	1		
6	40009871	GEAR-DIFF SIDE(RH)-TRG310		1	1	1		
7	40009740	PINION-DRV-TRG400	10t	2	2	2		
8	40009810	HUB-DIFF-LOCK-TRG310		1	1	1		
9	40009868	ROLLER-TRG310	D12x1.5	10	10	10		
10	40009521	BOLT-HEX-TRG310	M12x1.25x23	8	8	8		
11	40029174	PIN-SPRING-S446065010	D5x50	1	1	1		
12	40011798	PLATE-LOCK-TRG310	1.0t	4	4	4		
13	40012290	WASHER-LOCK-TRG310	1.0t	4	4	4		
14	40028061	BOLT HEX-S105062043	M8x1.25	8	8	8		
15	40012423	WASHER-THRUST-TRG970	OD43.07xID19.15x0.8t	2	2	2		
16	40012426	WASHER-THRUST-TRG970	OD71.44xID41.47x0.8t	1	1	1		
17	40012428	WASHER THRUST(LH) TRG310	OD74xID55x0.8t	1	1	1		

FRONT AXLE ASSY

FIG. 5-1 G. 400

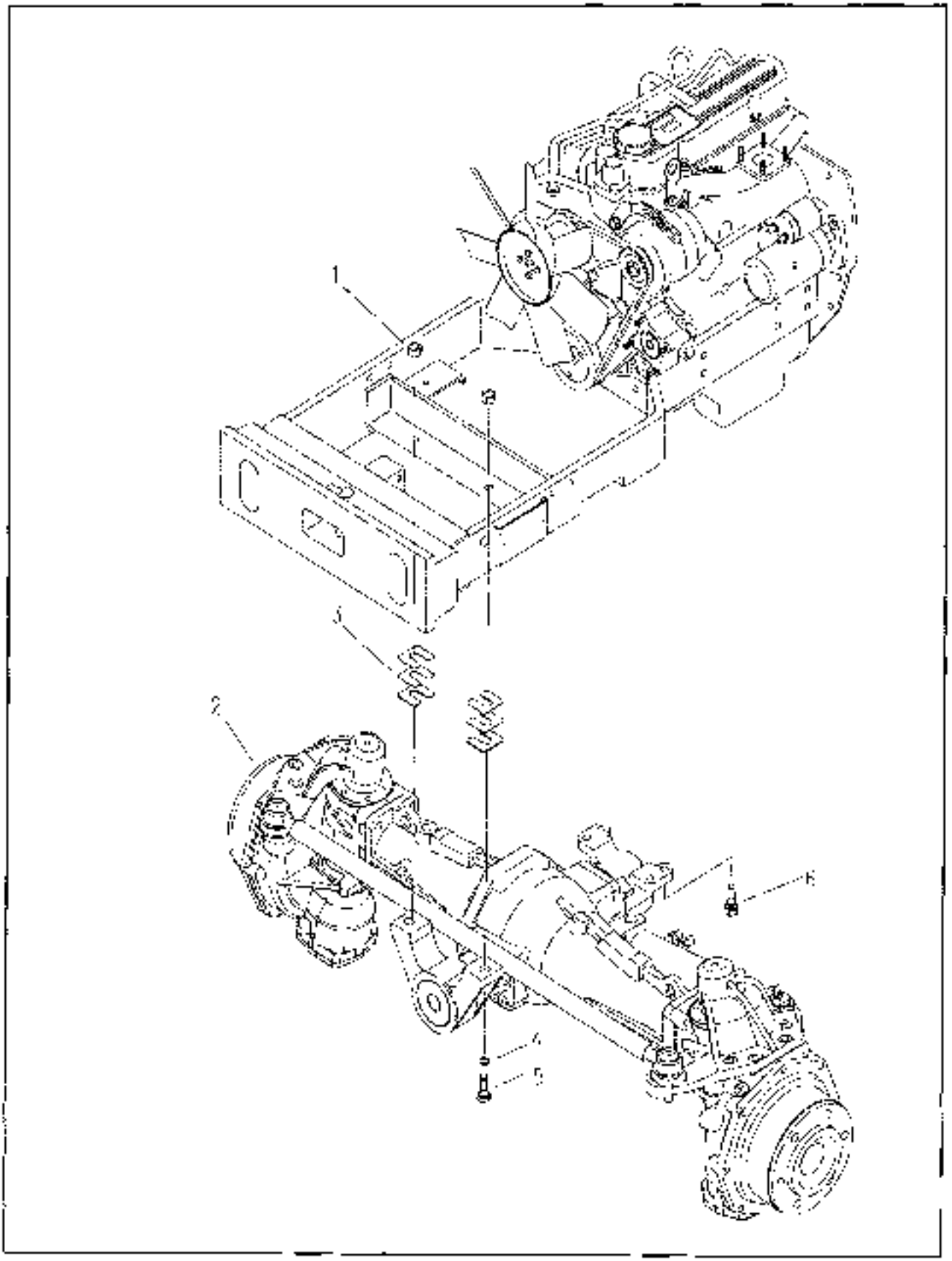

04-05-01 00

FRONT AXLE ASSY

FIG. 5-1

NO.	PART NO.	PART NAME & DESCRIPTION		QTY A	QTY B	QTY C	APP. NO.	REM
1	40008539	NUT-LOCK-TRG400	M16×1.5	2	2	2		
2	20021270	FRONT AXLE ASSY-PTO DRVN 3-G400		1	1	1		
3	40067166	LINER-F/AXLE-TRG400	0.4t	AR	AR	AR		
	40067167	LINER-F/AXLE-TRG400	1.2t	AR	AR	AR		
	40067168	LINER-F/AXLE-TRG400	2.3t	AR	AR	AR		
4	40029555	WASHER-SPR-S361160013	Ø28×Ø16.2×4t	2	2	2		
5	40029477	BOLT-HEX-S103164543	M16×1.5×45	2	2	2		
6	40028959	BOLT HEX W/WS-S154123533	M12×1.75×35	4	4	4		

FRONT AXLE CASE

FIG. 5-2A G. 400

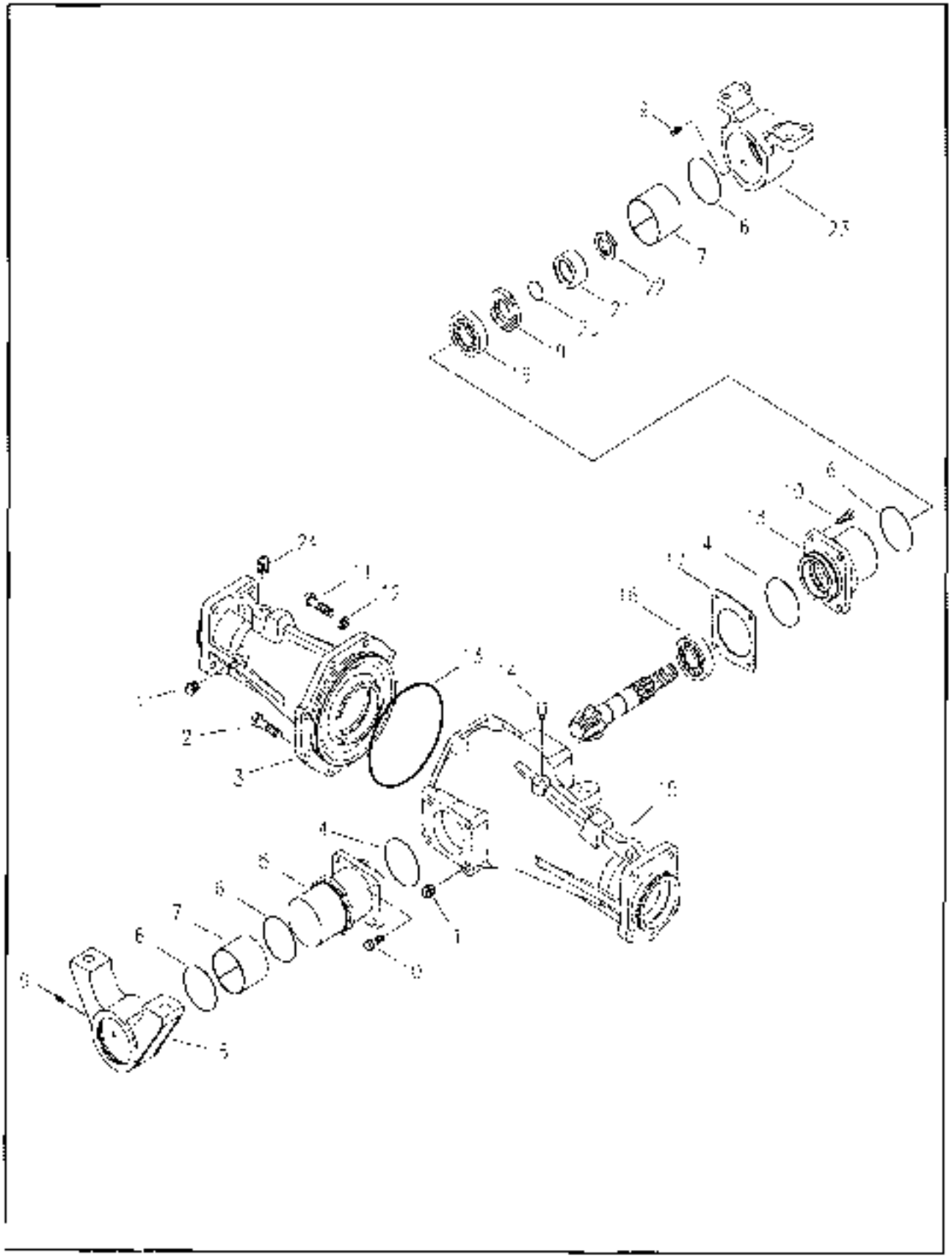

04-05-01 00

FIG. 5-2A

NO	PART NO.	PART NAME & DESCRIPTION		QTY A	QTY B	QTY C	APP.NO	REM
1	40009626	PLUG-TAPER-TRG970	PT 3/8	3	3	3		
2	40028939	BOLT-HEX W/WS-S163123533	M12×1.75×35	7	7	7		
3	40009028	CENTER CASE-FRONT AXLE(RH)-TRG400		1	1	1		
4	40029220	O-RING-S862175010	D74.4×3.1	2	2	2		
5	40009392	HOLDER-FRONT PIVOT-TRG400		1	1	1		
6	40029729	O-RING-S862080010	D79.4×3.1	4	4	4		
7	40010120	BUSHING-TRG970	90×40	2	2	2		
8	40009414	BRACKET-F/AXLE FRONT-TRG400		1	1	1		
9	40008516	NIPPLE-GREASE-TRG970	PT 1/8	2	2	2		
10	40028949	BOLT-HEX W/WS-S154100030	M10×1.25×30	6	6	6		
11	40009077	BOLT-REAMER-TRG970	M12×1.75	1	1	1		
12	40029551	WASHER-SPR-S381120013	t1.21.5×φ12.2×31	1	1	1		
13	40029234	O-RING-S862175010	D174.3×5.7	1	1	1		
14	40011406	AIR-BREATHER ASSY G400		1	1	1		
15	40009959	CENTER CASE-FRONT AXLE(LH)-TRG400		1	1	1		
16	40007930	BEARING-TAPER-TRG400	[illegible]	2	2	2		
17	40012000	SHIM-TRG970	0.07	AR	AR	AR		
	40012001	SHIM-TRG970	0.2t	AR	AR	AR		
18	40010424	CASE BEARING-TRG400		1	1	1		
19	40007426	SEAL-OIL-TRG970	φ82×φ45×9t	1	1	1		
20	40029212	O-RING-S861030010	D29.7×3.5	1	1	1		
21	40009998	BUSHING-SEAL-TRG410	φ45×15	1	1	1		
22	40009035	NUT-HEX-TRG970	M30×1.5	1	1	1		
23	40009435	BRACKET-F/AXLE REAR-TRG400		1	1	1		
24	40009645	PLUG-TAPER-TRG970	PT 1/2	1	1	1		

FRONT AXLE CASE(RH)

FIG. 5-28 **G. 400**

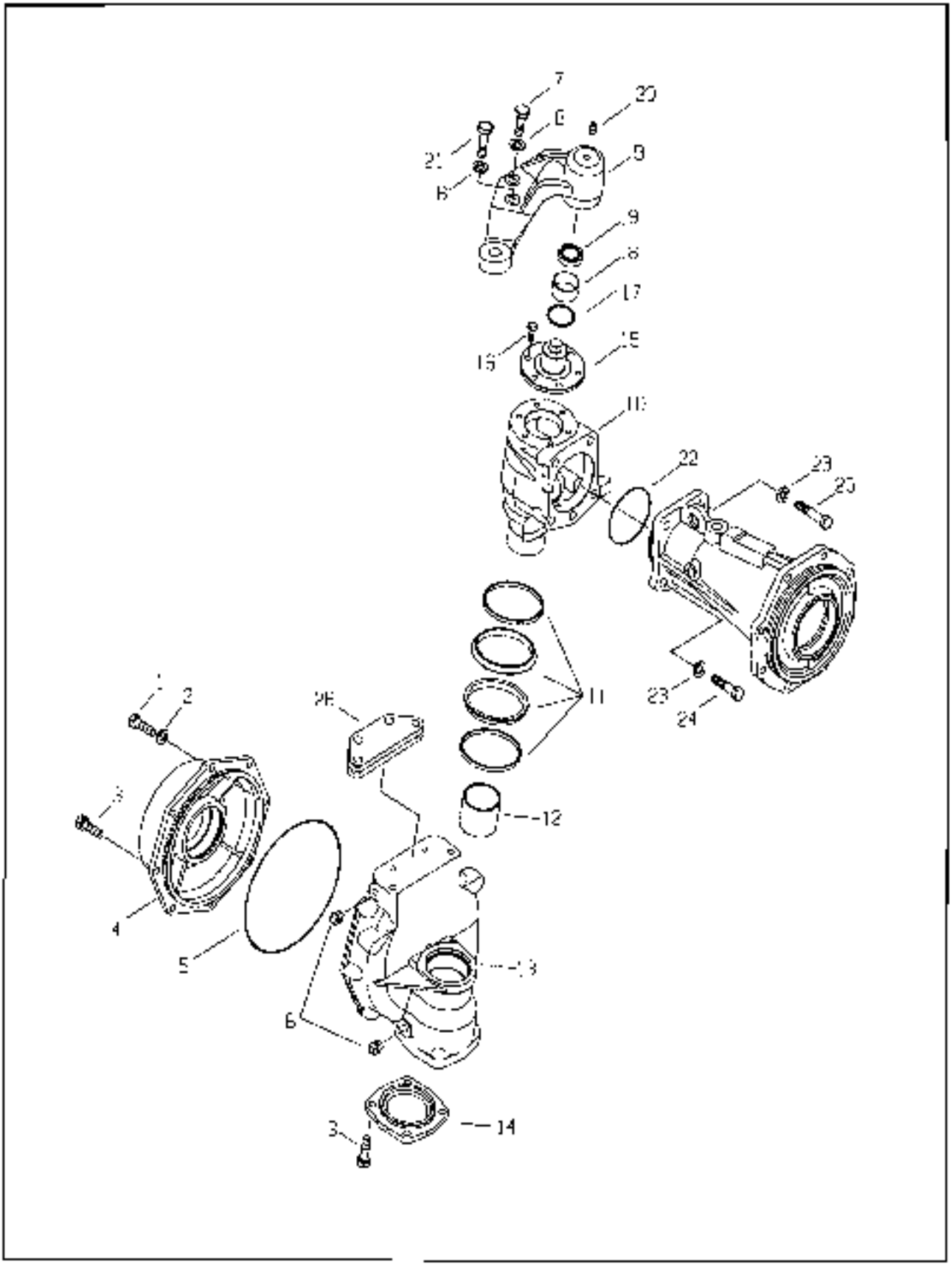

FRONT AXLE CASE(RH)

FIG. 5-2B

NO	PART NO	PART NAME & DESCRIPTION		QTY A	QTY B	QTY C	APP.NO	REM.
1	40009512	BOLT-HEX-TRG970	M10×1.25	1	1	1		
2	40029549	WASHER-SPR-S361100013	Φ18.4×10.2×2.5t	1	1	1		
3	40028049	BOLT-HEX W/WS-S151103033	M10×1.25×30	11	11	11		
4	40009327	COVER-R/AXLE SHAFT-TRG400		1	1	1		
5	40007364	O-RING-RUBBER-TRG970	D234×3	1	1	1		
6	40009626	PLUG-TAPER-TRG970	PT 3/8	2	2	2		
7	40029381	BOLT-HEX-S101123043	M12×1.75×30	2	2	2		
8	40029551	WASHER-SPR-S361120013	Φ21.5×Φ12.2×3t	4	4	4		
9	40008995	ARM-(RH)-TRG400		1	1	1		
10	40009021	CASE-KING PIN-TRG400		1	1	1		
11	40007918	SEAL ASSY GROUP TRG400		1	1	1		
12	40007901	BUSHING-DU-TRG400	M86030DU	1	1	1		
13	40008940	CASE-GEAR(RH)-TRG400		1	1	1		
14	40030079	COVER-W/BRG CASE-TRG400		1	1	1		
15	40009964	HOLDER-ARM-TRG400		1	1	1		
16	40028923	BOLT-HEX W/WS-S153082533	M8×1.25×25	6	6	6		
17	40012656	SEAL-DUST-A0652582	Φ40×Φ48×6.5t	1	1	1		
18	40012936	BUSHING-A0678120	M64020DU	1	1	1		
19	40007983	BEARING-TAPER-TRG400	#32004XJ	1	1	1		
20	40009516	NIPPLE-GREASE-TRG970	PT 1/8	1	1	1		
21	40009921	BOLT-REAMER-TRG970	M12X1.75X35	2	2	2		
22	40029230	O-RING-S802090010	D83.4×3.1	1	1	1		
23	40029553	WASHER-SPR-S361140013	Φ24.5×Φ14.2×3.5t	5	5	5		
24	40029397	BOLT-HEX-S101144043	M14×2×40	4	4	4		
25	40009536	BOLT-REAMER-TRG970	M14×2×50	1	1	1		
26	40012502	SHIM-TRG400	0.15t	1	1	1		
	40012667	SHIM-TRG400	0.30t	1	1	1		
	40012668	SHIM-TRG400	0.40t	1	1	1		

FRONT AXLE CASE(LH)

FIG. 5-2C **G. 400**

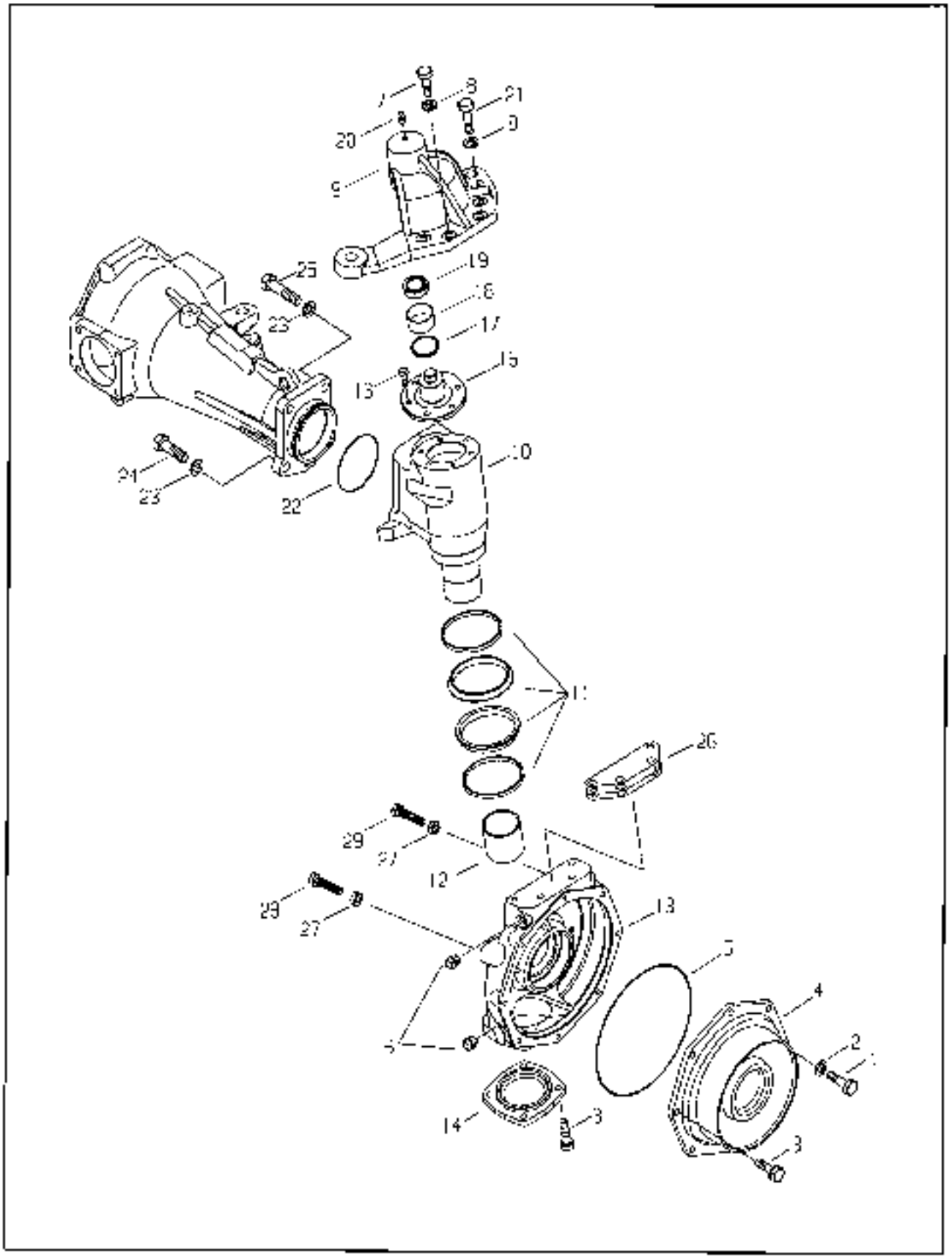

FRONT AXLE CASE(LH)

FIG. 5-2C

NO.	PART NO	PART NAME & DESCRIPTION		QTY A	QTY B	QTY C	APP.NO	REM.
1	40009512	BOLT-HEX-TRG970	M10×1.25	1	1	1		
2	40029549	WASHER-SPR-S381100013	Φ18.4×10.2×2.5t	1	1	1		
3	40028949	BOLT-HEX WWS-S154100033	M10×1.25×30	11	11	11		
4	40009327	COVER F/AXLE S-IAPT-TRG400		1	1	1		
5	40007361	O-RING-RUBBER-TRG970	D231×3	1	1	1		
6	40009026	PLUG-TAPER-TRG970	PT 3/8	2	2	2		
7	40029361	BOLT-HEX-S101123343	M12×1.75×30	2	2	2		
8	40029551	WASHER SPR S381120013	Φ21.5×Φ12.2×3t	4	4	4		
9	40009356	ARM-(LH)-TRG400		1	1	1		
10	40009321	CASE-KING PIN-TRG400		1	1	1		
11	40007318	SEAL ASSY-GROUP TRG400		1	1	1		
12	40007301	BUSHING-DU-TRG400	MF60.40DU	1	1	1		
13	40009339	CASE-GEAR(LH)-TRG400		1	1	1		
14	40036379	COVER-WBRG CASE TRG400		1	1	1		
15	40009364	HOLDER-ARM-TRG400		1	1	1		
16	40028923	BOLT-HEX WWS-S153003533	M8x1.25x25	6	6	6		
17	40012956	SEAL DUST A0852502	Φ40×Φ49×6.5t	1	1	1		
18	40012936	BUSHING-A0878120	MF40200U	1	1	1		
19	40007363	BEARING-TAPER-TRG400	JS20041XJ	1	1	1		
20	40009516	NIPPLE-GREASE-TRG970	PT 1/8	1	1	1		
21	40009921	BOLT-REAMER-TRG970	M12X1.75X35	2	2	2		
22	40029250	O-RING SR02090L10	D99.4×3.1	1	1	1		
23	40029553	WASHER-SPR-S381140013	Φ24.5×Φ14.2×3.5t	5	5	5		
24	40029397	BOLT-HEX-S101144043	M14×2×40	4	4	4		
25	40009536	BOLT-REAMER-TRG970	M14×2×50	1	1	1		
26	40032502	SHIM-TRG400	0.15t	1	1	1		
	40012967	SHIM-TRG400	0.30t	1	1	1		
	40012968	SHIM-TRG400	0.40t	1	1	1		
27	40028726	NUT-HEX 1 TY-S301120043	M12×1.75	2	2	2		
28	40027955	BOLT-HEX-S101125543	M12×1.75×55	1	1	1		
29	40028530	BOLT-HEX FT S163123543	M12×1.75×35	1	1	1		

FRONT DIFFERENTIAL

FIG. 5-3 **G. 400**

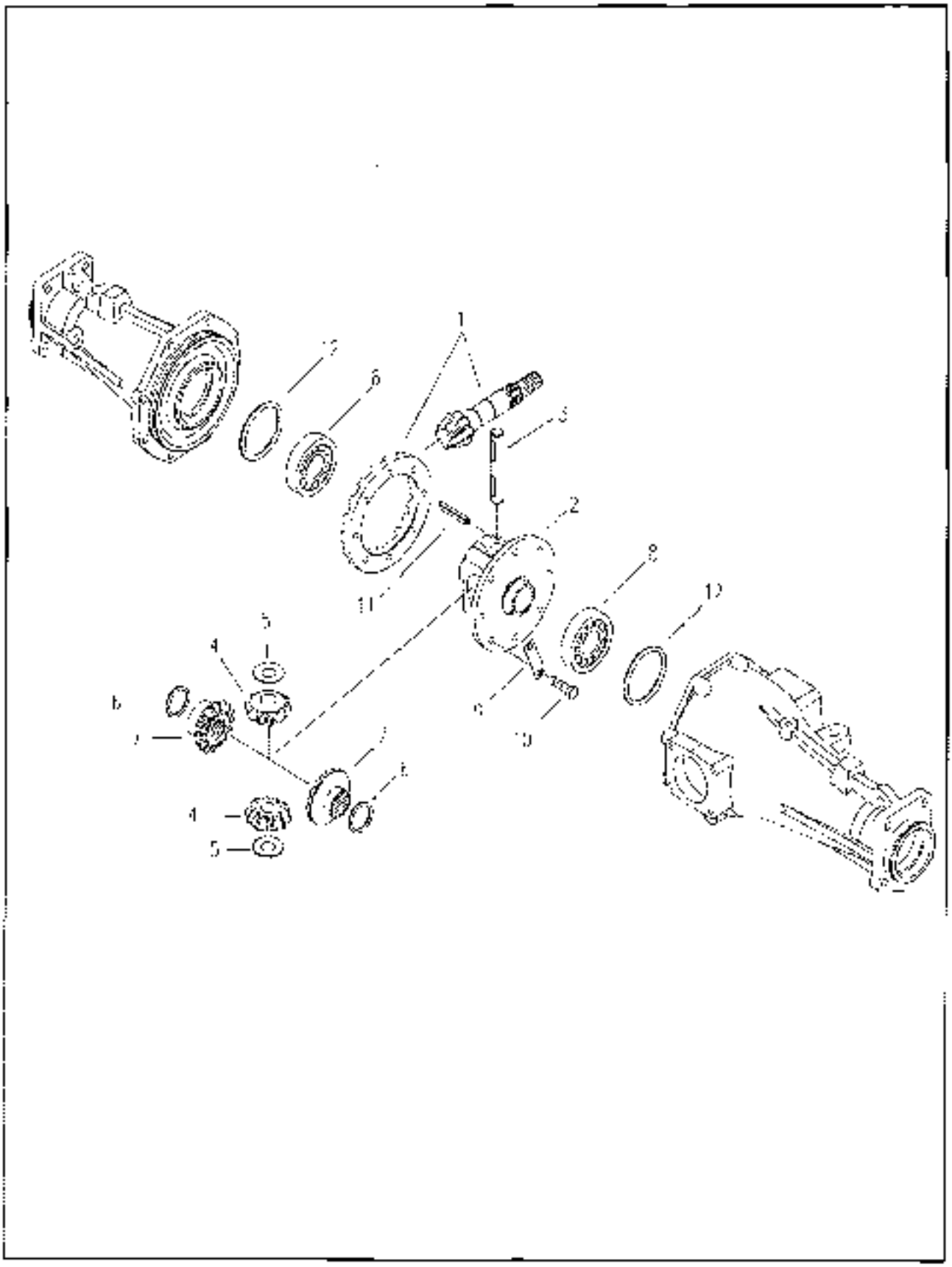

FRONT DIFFERENTIAL

FIG. 5-3

NO.	PART NO.	PART NAME & DESCRIPTION		QTY A	QTY B	QTY C	APP.NO	REM
1~11	20100630	DIFF ASSY-F/AXLE-G410		1	1	1		
1	40036068	PINION+RING-GEAR SET-G400	6/37t	1	1	1		
2	40027640	CASE-DIFF-TRG410		1	1	1		
3	40009997	SHAFT-DIFF-TRG410		1	1	1		
4	40036061	GEAR-MATE-TRG310	13t	2	2	2		
5	40012423	WASHER-THRUST-TRG970	0.8t	2	2	2		
6	40012426	WASHER-THRUST-TRG970	0.8t	2	2	2		
7	40036062	GEAR DIFF SIDE(RH) TRG310	16t	2	2	2		
8	40012713	BEARING-BALL-A3862100	96210 (DD90×IDsc×20)	2	2	2		
9	40011928	LOCK-PLATE TRG410		4	4	4		
10	40000510	BOLT-HEX-TRG410	M10×1.25×20	8	8	8		
11	40029175	PIN-SPRING-S446065012	Φ6×50	1	1	1		
12	40012427	LINER-TRG970	0.07t	AR	AR	AR		
	40012428	LINER-TRG970	0.2t	AR	AR	AR		
	40012429	LINER-TRG970	1.0t	AR	AR	AR		

FIG. 5-4 G. 400

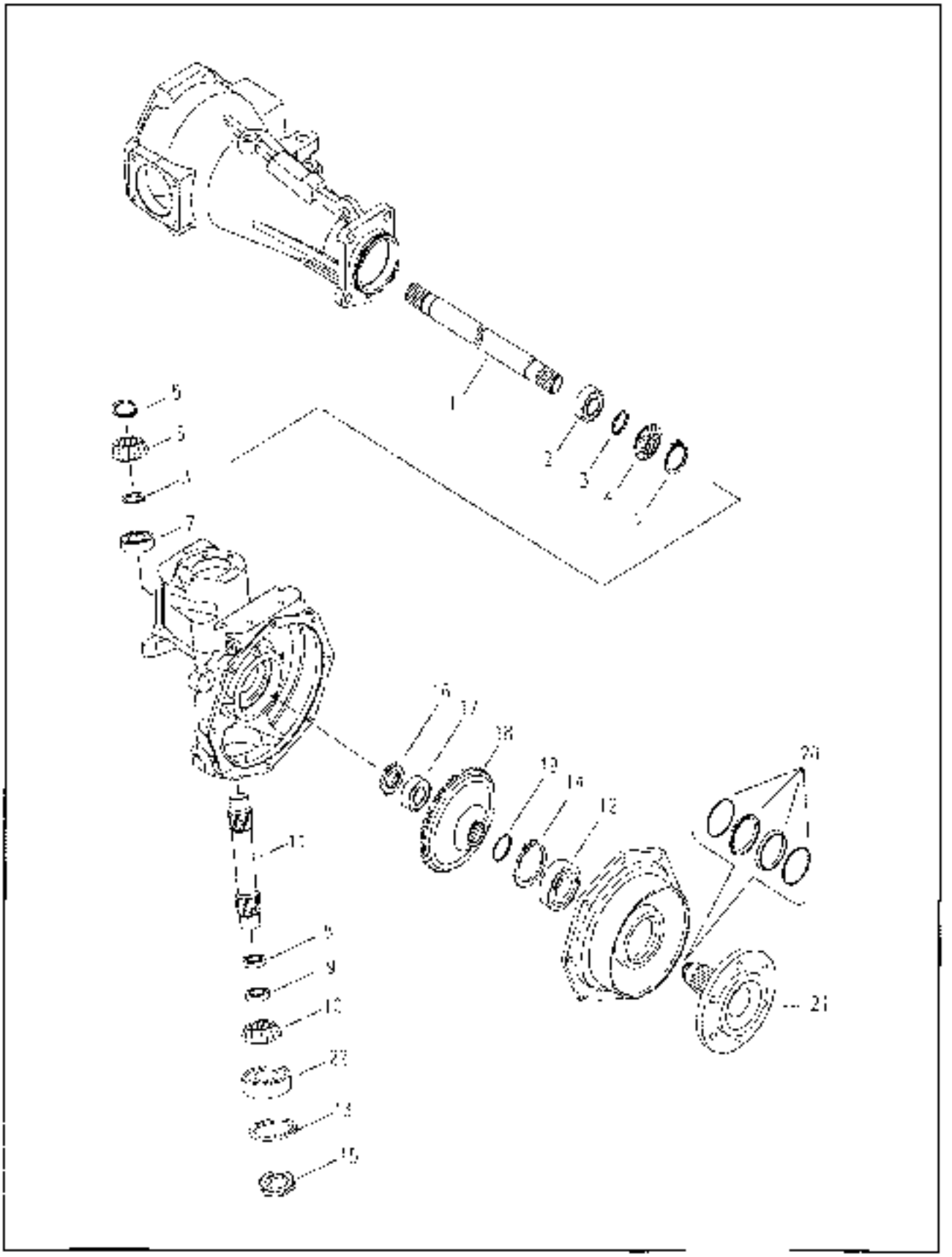

04-05-01 00

FIG. 5-4

NO.	PART NO.	PART NAME & DESCRIPTION		QTY A	QTY B	QTY C	APP. NO.	REM.
1	40009273	SHAFT-F/DIFF-TRG400		2	2	2		
2	40012720	BEARING-BALL-A0863070	#6307 (OD90×ID35×21)	2	2	2		
3	40012869	LINER-A0870108	0.15t	AR	AR	AR		
	40012870	LINER-A0870109	0.4t	AR	AR	AR		
	40012871	LINER-A0870110	0.5t	AR	AR	AR		
4	40036065	GEAR-BEVEL-TRG400	1.4t	2	2	2		
5	40029273	RING-SNAP-S810030001		4	4	4		
6	40036067	GEAR-BEVEL-TRG400	1.5t	2	2	2		
7	40007830	BEARING-TAPER-TRG400	[illegible]	2	2	2		
8	40009716	BEARING-THRUST-TRG970	[illegible]	2	2	2		
9	40010102	SPACER-TRG400		2	2	2		
10	40036066	GEAR-BEVEL-TRG400	1.4t	2	2	2		
11	40009096	SHAFT-KING PIN-TRG400		2	2	2		
12	40012713	BEARING-BALL-A0862100	#6210 (OD90×ID50×20)	2	2	2		
13	40012427	LINER-TRG970	0.07t	AR	AR	AR		
	40012428	LINER-TRG970	0.2t	AR	AR	AR		
14	40029304	RING-SNAP-S811090001	#30210	2	2	2		
15	40009934	NUT-LOCK-TRG281	M25×1.5	2	2	2		
16	40009936	NUT-LOCK-TRG400	M30×1.5	2	2	2		
17	40012721	BEARING-BALL-A0863080	#6308 (OD90×ID40×23)	2	2	2		
18	40036080	GEAR-TRG400	38t	2	2	2		
19	40012123	LINER-TRG970	0.4t	4	4	4		
	40012124	LINER-TRG970	0.6t	AR	AR	AR		
	40059311	SHIM-SA1970114	0.8t	AR	AR	AR		
	40012125	LINER-TRG970	1.0t	AR	AR	AR		
20	40007918	SEAL ASSY-GROUP-TRG400		2	2	2		
21	40036082	SHAFT-FRONT AXLE-TRG400		2	2	2		
22	40010341	BEARING-TAPER-CVG000	#30210	2	2	2		

REAR AXLE(480,481)

FIG. 5-5 G. 400

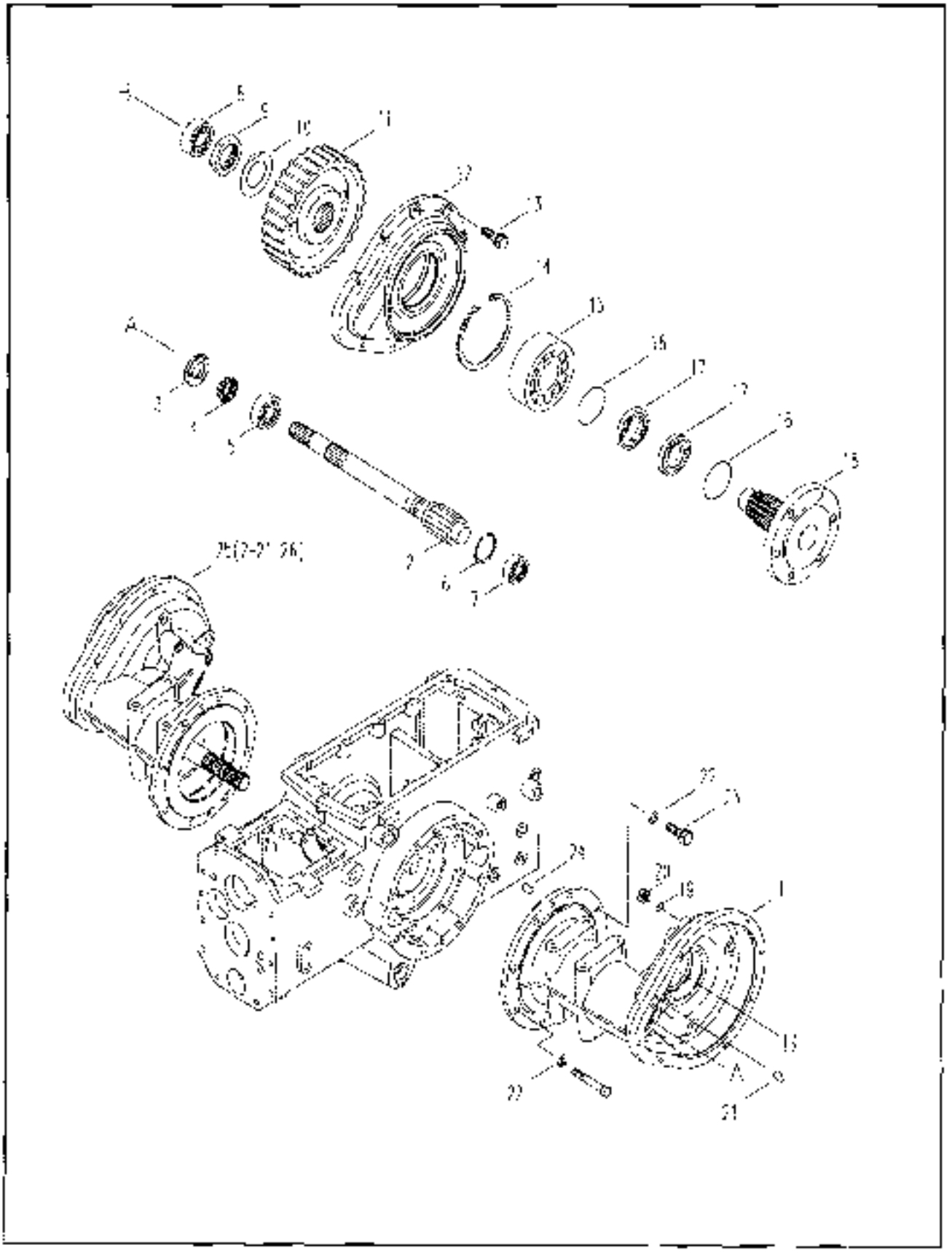

REAR AXLE(480,481)

FIG. 5-5

NO.	PART NO.	PART NAME & DESCRIPTION		QTY A	QTY B	QTY C	APP.NO.	REM.
1-21	20020421	F/DRIVE ASSY-(LH)-G480		1	1	1		
1	40008941	CASE-FINAL DRV(LH)-TRG480		1	1	1		
2	40009874	PINION-FINAL DRV-TRG481		2	2	2		
3	40007787	SEAL-OIL-TRG480	TB38x55x8	2	2	2		
4	40009646	NUT-LOCK-TRG481	M40x1.0	2	2	2		
5	40012721	BEARING-BALL-A0863080	#6308(OD90xID40x23)	2	2	2		
6	40029504	RING-SNAP-S811080001	D95.5x3t	2	2	2		
7	40012720	BEARING-BALL-A0863070	#6307(OD80xID35x21)	2	2	2		
8	40012930	BEARING-BALL-A0863090	#6309(OD100xID45x29)	2	2	2		
9	40009938	NUT-LOCK-TRG481	M55x1.5	2	2	2		
10	40011807	PLATE-LOCK-TRG481	OD96xID56x1.5t	2	2	2		
11	40009009	GEAR-FINAL DRV-TRG481	71T	2	2	2		
12	40009002	COVER-FINAL DRV-TRG480		2	2	2		
13	40028951	BOLT-HEX W/WS-S154104033	M10x1.25	20	20	20		
14	40029305	RING-SNAP-S811140001	D14.7x4t	2	2	2		
15	40012931	BEARING-BALL-A0863130	#6313(OD140xID65x33)	2	2	2		
16	40007786	RING-O-TRG480	D117xW7	4	4	4		
17	40007871	RETAINER GROUP SEAL-TRG480		4	4	4		
18	40009027	SHAFT-REAR AXLE-TRG481		2	2	2		
19	40012421	SEAL-PLUG TRG250	OD20xID26x1.5t	6	6	6		
20	40012697	PLUG-DRAIN-A0510281	M20x1.5	6	6	6		
21	40029095	PIN-PAR-S421102010	D15x20	4	4	4		
22	40029653	WASHER-SPR-S361140013	OD24.5xID14.2x3.5t	16	16	16		
23	40029397	BOLT-HEX-S101144043	M14x2.0	10	10	10		
24	40029102	PIN-PAR-S423102010	D10x20	4	4	4		
25	20020422	F/DRIVE ASSY-(RH)-G480		1	1	1		
26	40008942	CASE-FINAL DRV(RH)-TRG480		1	1	1		

FRONT & REAR WHEEL

FIG. 5-6 G. 490

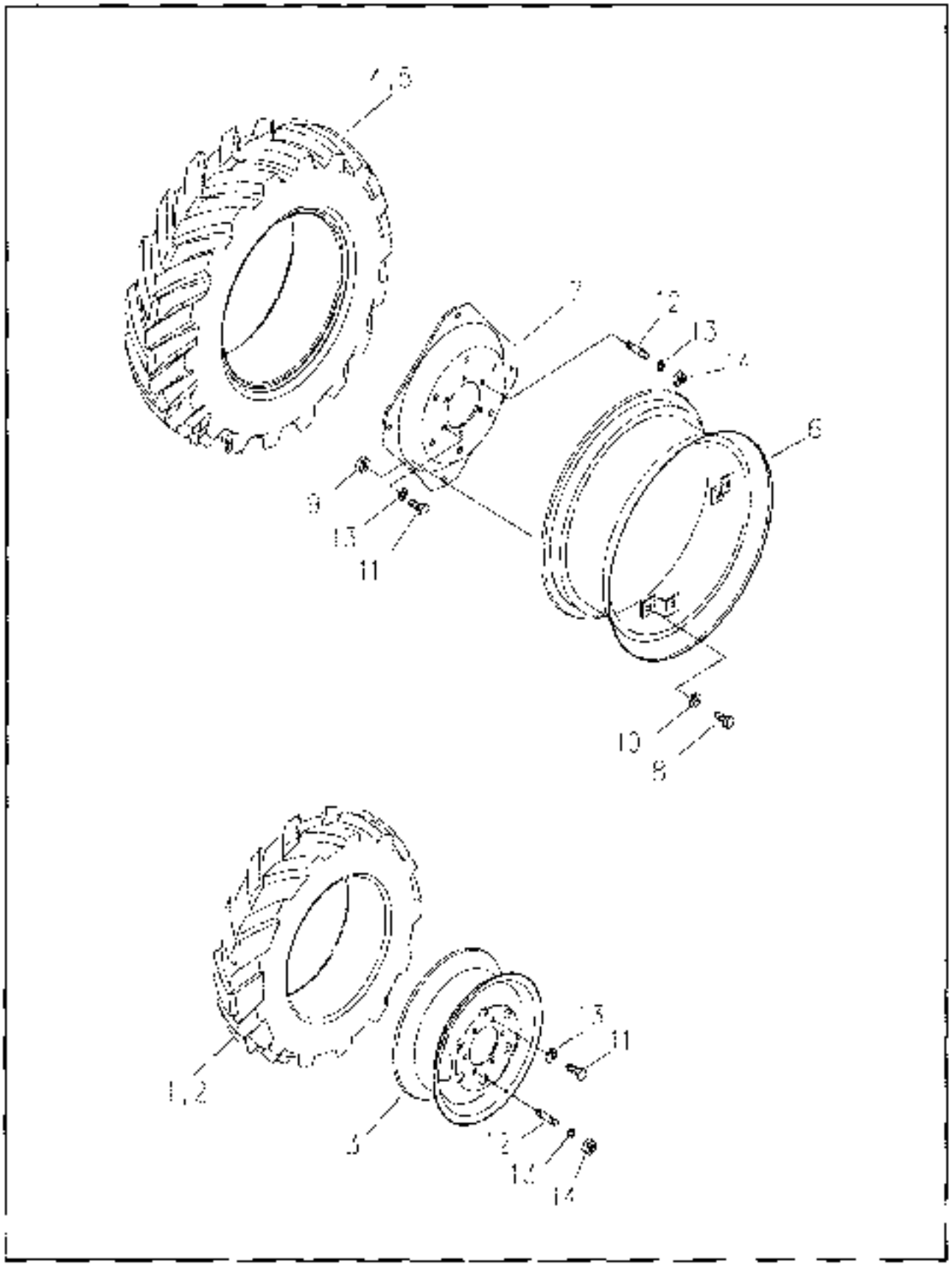

FRONT & REAR WHEEL

FIG. 5-6

NO	PART NO.	PART NAME & DESCRIPTION		QTY A	QTY B	QTY C	A-P.NO	REM.
1-2	*	G490S_FRONT TIRE ASSY-A	7-16(4PR)	*	2	*		
	*	C_FRONT TIRE ASSY-C	8-16(4PR)	2	*	2		
1	43007747	TUBE-TRG490		*	1	*		
	43007749	TUBE-TRG490		1	*	1		
2	43007645	TIRE-TRG490		*	1	*		
	43007647	TIRE-TRG490		1	*	1		
3	43007591	WHEEL ASSY-TRG490		2	2	2		
4-5	*	G490S_FRONT TIRE ASSY-G	11.2-24(6PR)	*	2	*		
	*	G490S_REAR TIRE ASSY-C	12.4-24(6PR)	2	*	2		
4	43007876	TUBE-TRG490		*	1	*		
	43007754	TUBE-INNER-TRG490		1	*	1		
5	43007623	TIRE-TRG490		*	1	*		
	43007626	TIRE-TRG490		1	*	1		
6-10	43007590	WHEEL ASSY-TRG490		2	2	2		
6	43011117	RIM-TRG490		1	1	1		
7	43011771	DISK-TRG490		1	1	1		
8	43027037	BOLT-HEX-TRG970		4	4	4		
9	43020031	NUT-HEX-S306160313		4	4	4		
10	43028556	WASHER-SPN-S261160013		4	4	4		
11	43029474	BOLT-HEX-S103163043	M16x1.5x30L	16	16	16		
12	43029014	BOLT-STUD-S167162593	M16x1.5x25L	8	8	8		
13	43029555	WASHER-SPN-S261160013	D29/16.2x41	24	24	24		
14	43028757	NUT-HEX-TY-S302160043	M16x1.5	8	8	8		

TIE ROD

FIG. 6-1 **G. 610**

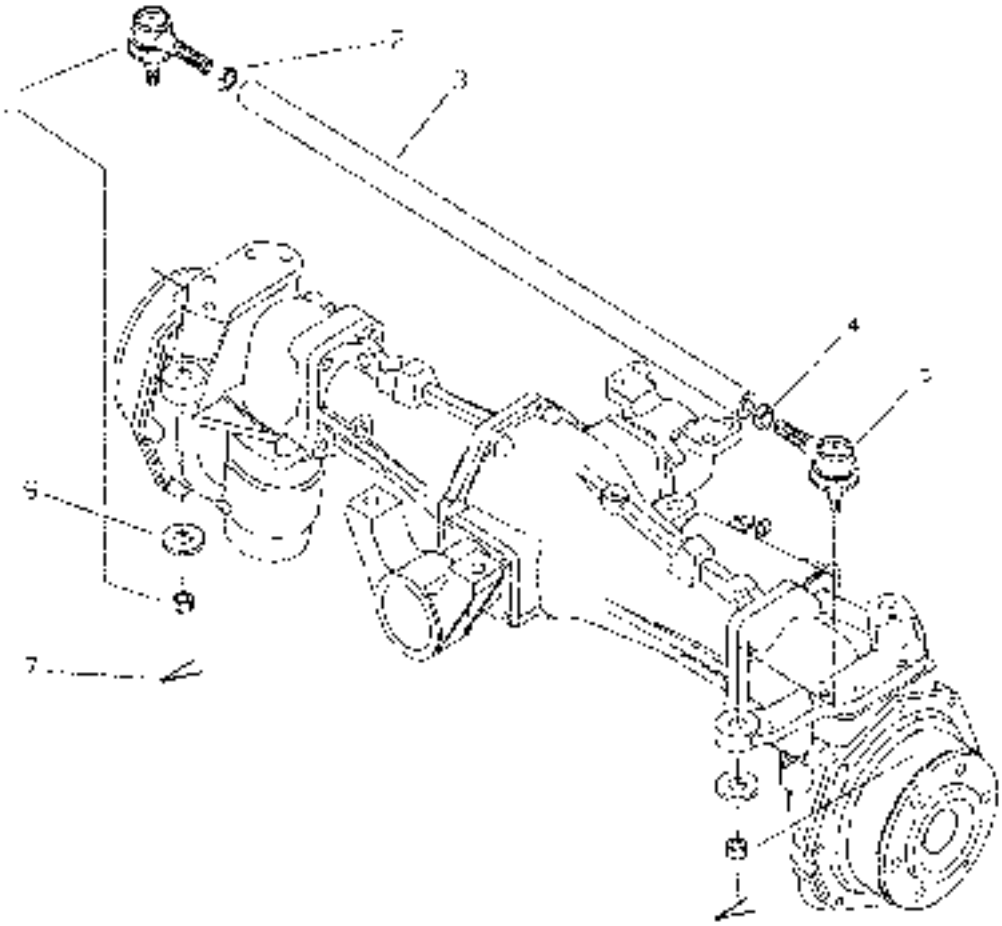

06-04-01 01

FIG. 6-1

NO.	PART NO.	PART NAME & DESCRIPTION		QTY A	QTY B	QTY C	APP.NO	REM.
1-5	40008067	TIE ROD ASSY-D510	3301	1	1	1		
1	40008103	END ASSY-RH-G610		1	1	1		
2	40029034	NUT-HEX-S3J6183043	M18×1.5	1	1	1		
3	40012534	PIPE TIE ROD-TRG610	784L	1	1	1		
4	40010386	NUT-HEX(LHT)-TRG610	M18×1.5	1	1	1		
5	40008102	END ASSY-LH-G610		1	1	1		
6	40029204	WASHER PLN-S3B5184013	3t	2	2	2		
7	40029127	PIN-SPLIT-S441403613	φ4×36	2	2	2		

STEERING CYLINDER

FIG. 6-2A

G. 630

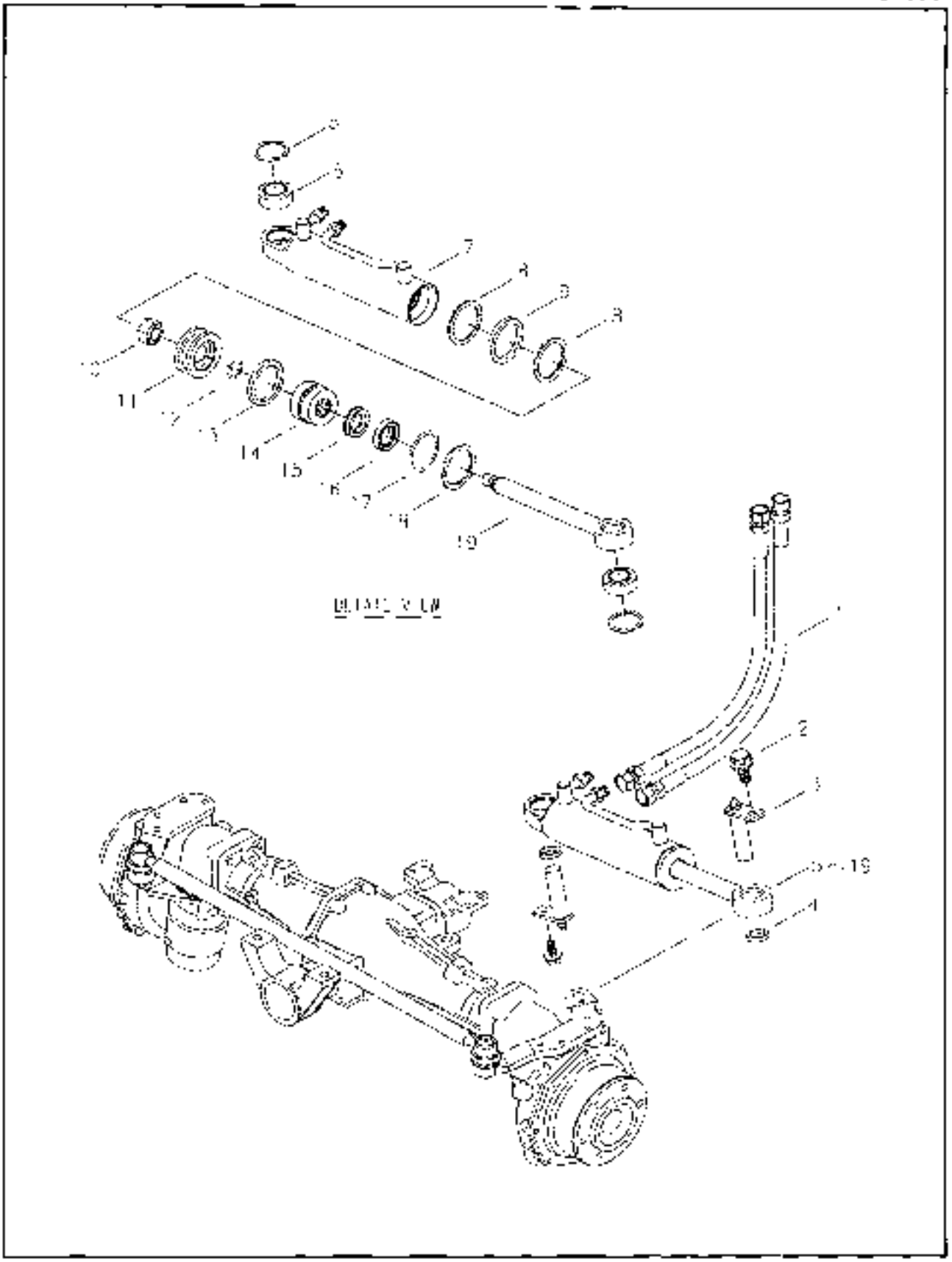

STEERING CYLINDER

FIG. 6-2A

NO.	PART NO	PART NAME & DESCRIPTION		QTY A	QTY B	QTY C	APP. NO	REM.
1	40007937	HOSE-STEERING-TRG630	410	2	2	2		
2	40029947	BOLT HEX WWS G15+102333	M10×1.25×20	2	2	2		
3	40008108	PIN ASSY-CYLINDER-G630		2	2	2		
4	40012554	SPACER-CYLINDER PIN-TRG630	D20×51	2	2	2		
5~19	40008087	CYLINDER ASSY-W/SENSOR-G630	293-448	1	1	1		
5	40029311	RING-SNAP-S81303S301	D35	2	2	2		
6	40009490	BUSHING BALL-TRG630		2	2	2		
7	40008177	CYLINDER ASSY-G630		1	1	1		
8	40007900	RING BACK UP-TRG630	D50	2	2	2		
9	40007513	O-RING-TRG630	D43.7×3.5	1	1	1		
10	40008079	NUT-LOCK-TRG630	M16×2	1	1	1		
11	40010391	PISTON-TRG630	D50	1	1	1		
12	40029201	O-RING-S801014010	D13.8×2.4	1	1	1		
13	40029217	O-RING-S801016010	D45.7×3.5	1	1	1		
14	40010392	HEAD-CYLINDER-TRG630		1	1	1		
15	40007505	GASKET-U-TRG630	D22.4	1	1	1		
16	40007547	SEAL DUST-TRG630	D22.4	1	1	1		
17	40012558	RING-WIRE-TRG630	D2	1	1	1		
18	40012559	RING-STOP-TRG630		1	1	1		
19	40010390	ROD-POSITION-TRG630	D22.4	1	1	1		

STEERING CYLINDER

FIG. 6-28 G. 630

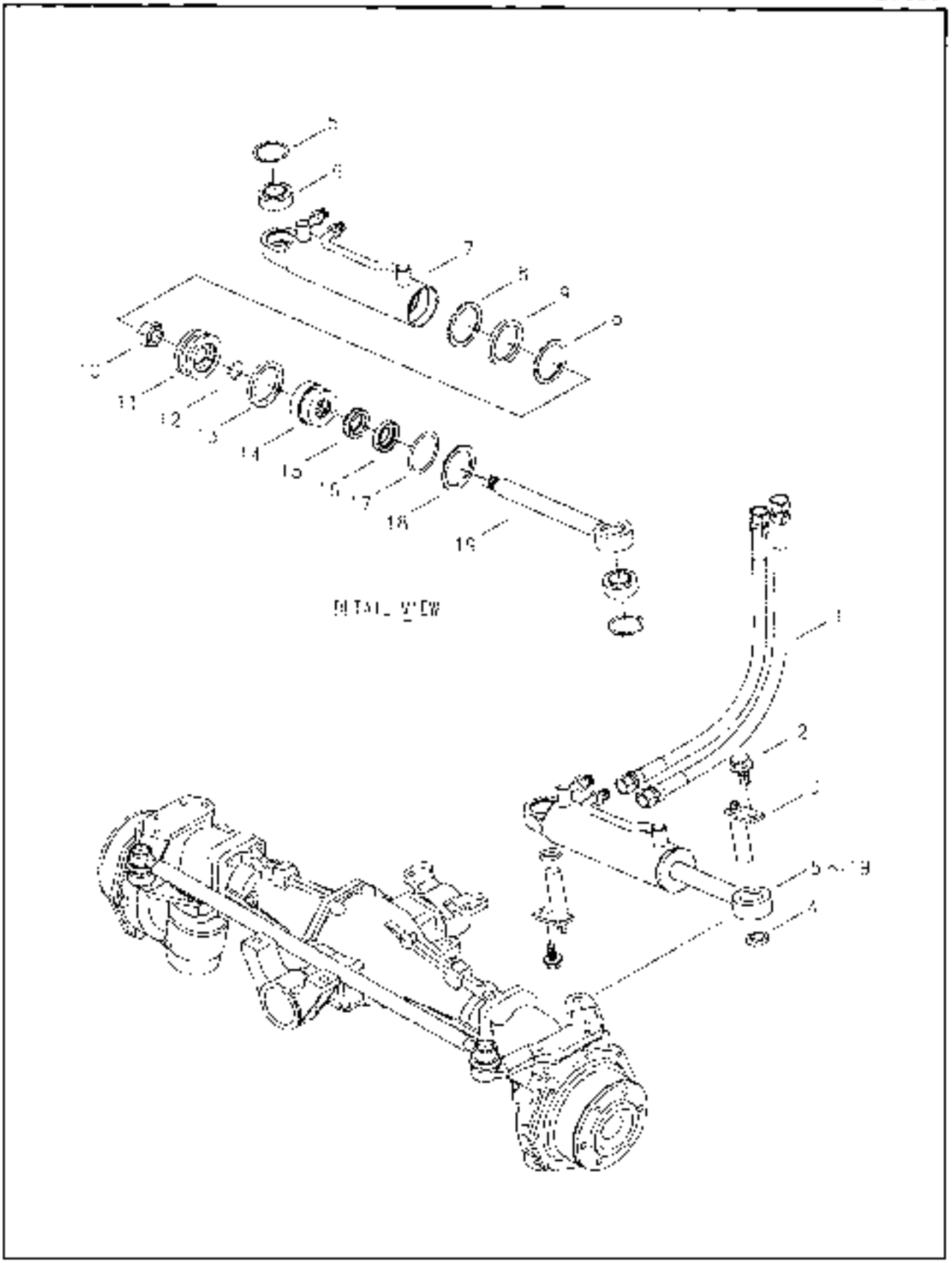

06-04-01 00

FIG. 6-2B

NO.	PART NO.	PART NAME & DESCRIPTION		QTY A	QTY B	QTY C	APP. NO.	REM.
1	40007937	HOSE-STEERING-TRG630	4101	2	2	2	-20060131	
	40007945	HOSE-STEERING-TRG630	6101	2	2	2	20060201-	0
2	40028547	BOLT-HEX WWS-S154 D2033	M10×1.25×20	2	2	2		
3	40000109	PIN ASSY-CYLINDER-G630		2	2	2		
4	40012664	SPACER-CYLINDER PIN-TRG630	D20×51	2	2	2		
5-19	40008087	CYLINDER ASSY-W/SENSOR-G630	293-446	1	1	1		
5	40020311	RING-SNAP-S81030001	D35	2	2	2		
6	40009498	BUSHING BALL-TRG630		2	2	2		
7	40008172	CYLINDER ASSY-G630		1	1	1		
8	40007930	RING-BACK UP-TRG630	D50	2	2	2		
9	40007513	O-RING-TRG630	D43.7×3.5	1	1	1		
10	40008928	NUT-LOCK-TRG630	M16×2	1	1	1		
11	40010391	PISTON-TRG630	D50	1	1	1		
12	40029207	O-RING-S8010 14010	D13.8×2.4	1	1	1		
13	40029217	O-RING-S8010 4310	D43.7×3.5	1	1	1		
14	40010392	HEAD-CYLINDER-TRG630		1	1	1		
15	40007535	GASKET-U-TRG630	D22.4	1	1	1		
16	40007547	SEAL-DUST-TRG630	D22.4	1	1	1		
17	40012658	RING-WIRE-TRG630	D2	1	1	1		
18	40012659	RING-STOP-TRG630		1	1	1		
19	40010390	ROD-POSITION-TRG630	D22.4	1	1	1		

STEERING COLUMN

FIG. 6-3 G. 530

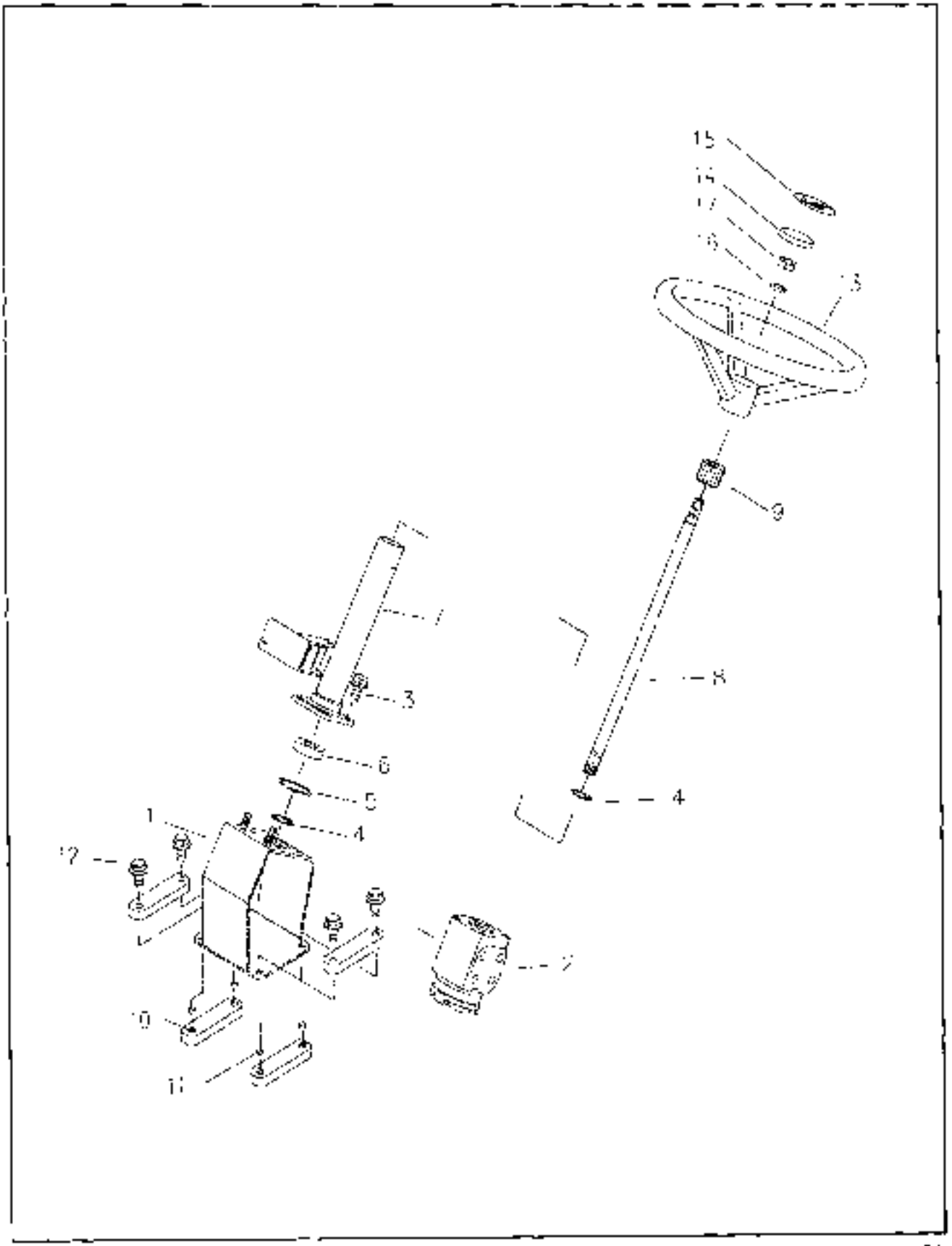

06 04-01 C1

FIG. 6-3

NO.	PART NO.	PART NAME & DESCRIPTION		QTY A	QTY B	QTY C	APP.NO	REM.
1	40011218	SUPPORT-STEERING-TRG630		1	1	1		
2	40034637	UNIT-STEERING-TRG630	60cc/rev	1	1	1		
3	40029948	BOLT-HEX WWS-S154102523	M10×1.25×25	4	4	4		
4~9	40008398	COLUMN ASSY-STEERING-G630		1	1	1		
4	40029205	RING-SNAP-S810020001	φ20	2	2	2		
5	40029294	RING-SNAP-S810042001	φ42	1	1	1		
6	40007751	BEARING-BALL-TRG870	[illegible]	1	1	1		
7	40011789	COLUMN-STEERING-TRG630		1	1	1		
8	40010187	SHAFT-STR/COLUMN-TRG630	φ20	1	1	1		
9	40007475	SEAL-STEERING-TRG630		1	1	1		
10	40007741	RUBBER-DAMPING-TRG630	81	4	4	4		
11	40012414	COLLAR-STEERING-TRG630		4	4	4		
12	40029947	BOLT-HEX WWS-S156103033	M10×1.25×30	4	4	4		
13~15	40008219	WHEEL-STEERING-TRG630		1	1	1		
13	[illegible]	WHEEL-STEERING-TRG630		1	1	1		
14	40008399	CAP HANDLE-TRG630		1	1	1		
15	40008567	DECAL-HANDLE CAP LS-TRG980		1	1	1		
16	40029552	WASHER-SPR-S361140013	φ14.2×2.5	1	1	1		
17	40029551	NUT-HEX SMALL-S314140013	M14×1.5	1	1	1		

조향 칼럼
STEERING COLUMN

FIG. 6-3 G. 630

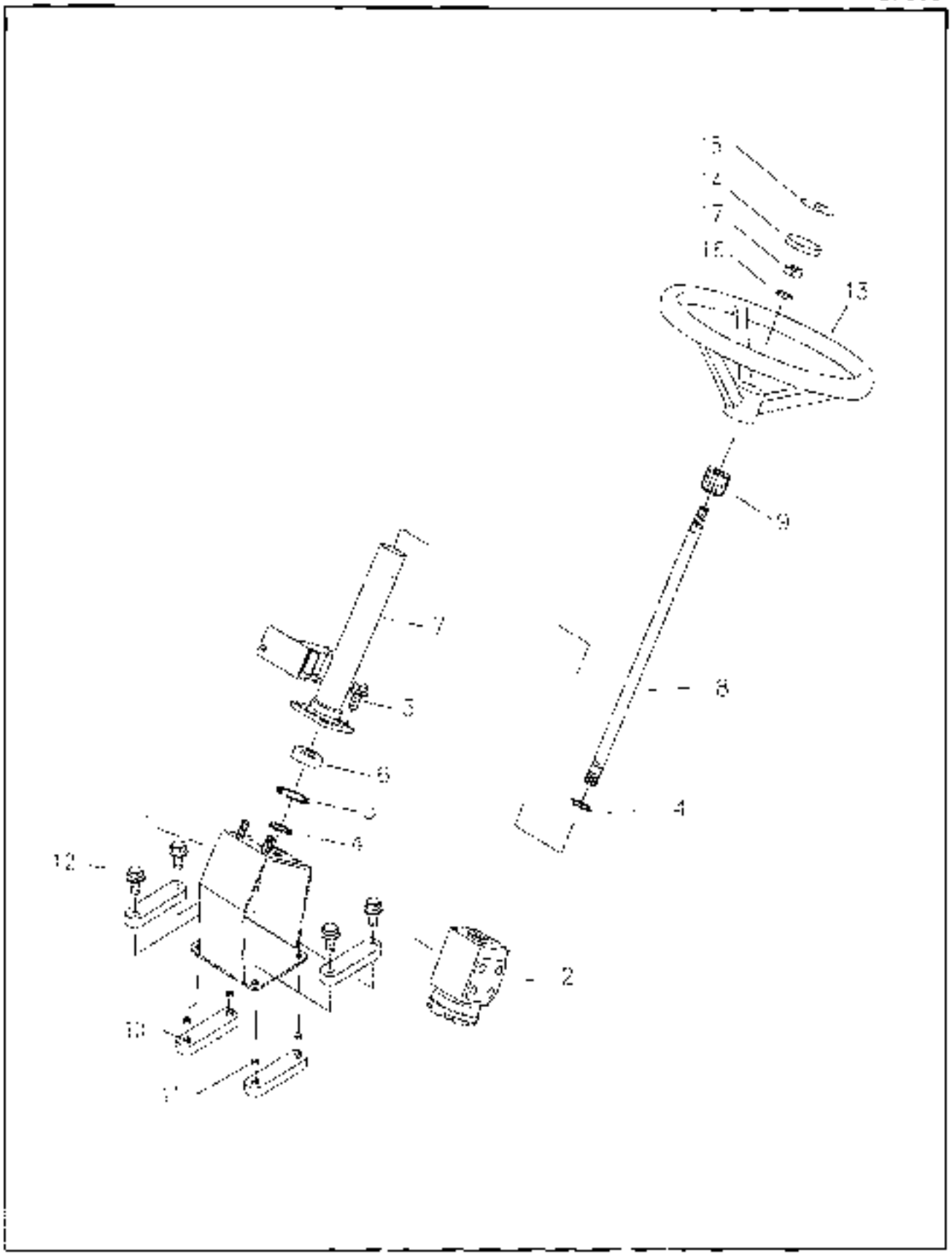

04-07-01 00

조향 칼럼
STEERING COLUMN

A-LT280D,B-LT300D,C-360D

FIG. 6-3

번호 NO.	부품번호 PART NO.	부 품 명 PART NAME & DESCRIPTION		QTY A	QTY B	QTY C	적용호기 APP. NO	비고 REM.
1	40011218	SUPPORT-STEERING TRG630		1	1	1		
2	40034632	UNIT-STEERING-TRG630	80cc/rev	1	1	1		
3	40028948	BOLT-HEX W/WS-S154102533	M10×1.25×25	4	4	4		
4~9	40008008	COLUMN ASSY-STEERING-G630		1	1	1		
4	40029285	RING-SNAP-S810020031	ϕ20	2	2	2		
5	40029294	RING-SNAP-S811042001	ϕ42	1	1	1		
6	40007751	BEARING-BALL-TRG970	60×DC (C042×D20×12)	1	1	1		
7	40011789	COLUMN-STEERING TRG630		1	1	1		
8	40010187	SHAFT-STR/COLUMN-TRG630	ϕ20	1	1	1		
9	40007475	SEAL-STEERING-TRG630		1	1	1		
10	40007541	RUBBER-DAMPING-TRG630	8l	4	4	4		
11	40012414	COLLAR-STEERING-TRG630		4	4	4		
12	40028987	BOLT-HEX W/WS-S156103063	M10×1.25×30	4	4	4		
13~15	40008219	WHEEL-STEERING-TRG630		1	1	1		
13	40008424	WHEEL-STEERING TRG630		1	1	1		
14	40008309	CAP-HANDLE-TRG630		1	1	1		
15	40049952	DECAL LG MARK TRG980		1	1	1		
16	40029053	WASHER-SPR-S361140015	ϕ14.2×3.5	1	1	1		
17	40029051	NUT-HEX SMALL-S314140013	M14×1.5	1	1	1		

STEERING PIPE LINE

FIG. 6-4C

G. 630

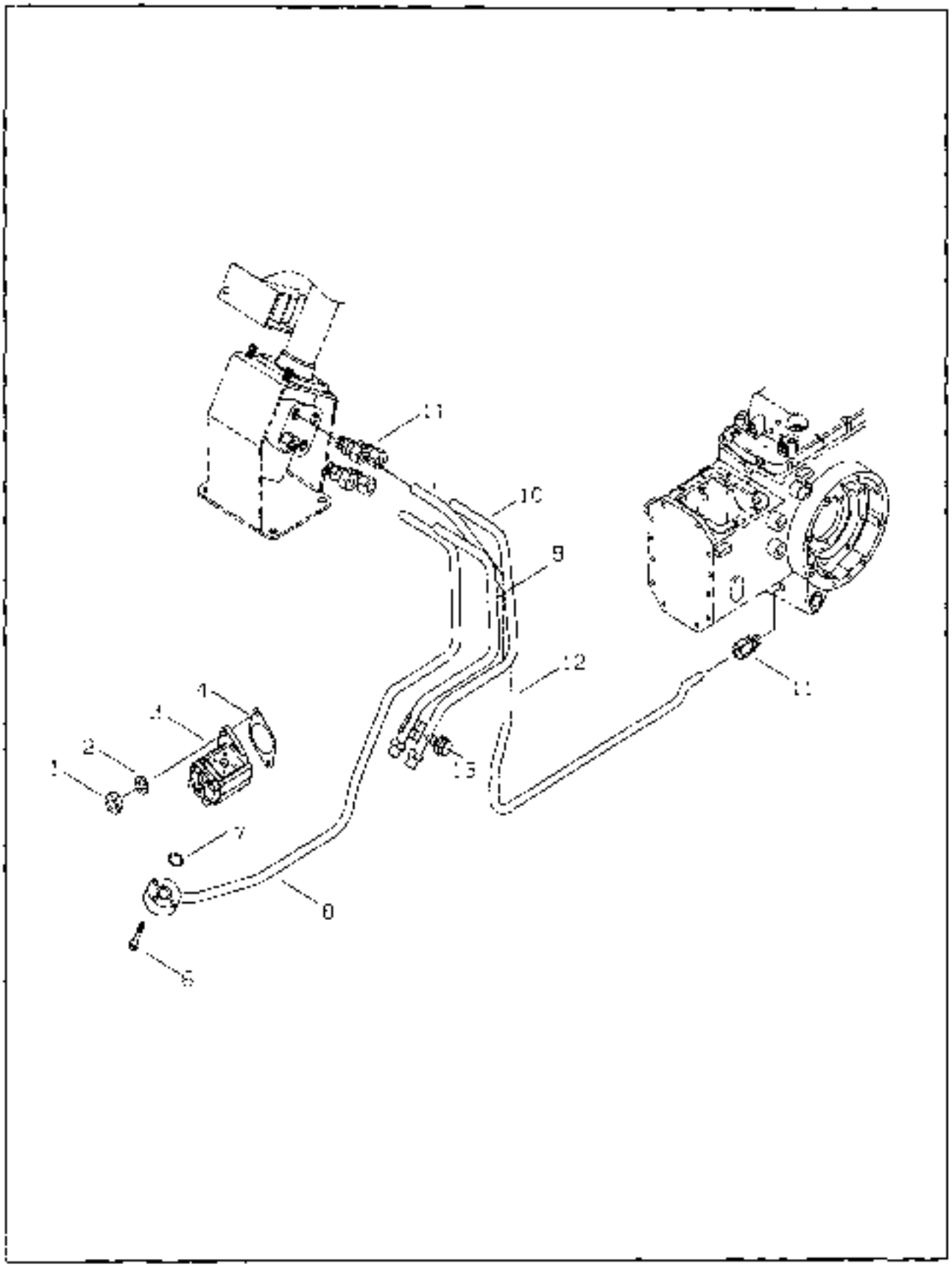

06 04-01

01

FIG. 6-4C

NO.	PART NO.	PART NAME & DESCRIPTION		QTY A	QTY B	QTY C	APP NO	REM
1	40009042	NUT-HEX SMALL S3T3080013	M8×1.25	2	2	2		
2	40029546	WASHER-SPR-S361080013	φ15.4×φ8.2×2t	2	2	2		
3	40007600	PUMP-STEERING-TRG630	7cc/rev	1	1	1		
4	40006913	GASKET-PUMP-TRG630	0.8t	1	1	1		
5	40007331	RUBBER-CLAMP-TRG630		1	1	1	-20060131	
6	40029914	BOLT-HEX W/WS S155062533	M6×1.0×35	3	3	3		
7	40029906	O-RING-S801018110	D17.8×2.4	6	1	1		
8,11	40150878	SUB ASSY-PRESSURE-TRG630		1	1	1	-20050430	
	40008042	PIPE ASSY-STR/PRS-G630		1	1	1	-20050131	
	40008071	PIPE ASSY-STR/PRS-G630		1	1	1	20060201-	O
8	40156936	PIPE-P/S PRESSURE-TRG630		1	1	1	-20050430	
	40011009	PIPE-STR/PRESSURE-TRG630		1	1	1	-20060131	
	40011197	PIPE-STR/PRESSURE-TRG630		1	1	1	20060201-	O
9,11	40008179	PIPE ASSY-STR(RH)-G630		1	1	1	-20060131	
	40008143	PIPE ASSY-STR(LH)-G630		1	1	1	20060201-	O
9	40011192	PIPE-STEERING-TRG630		1	1	1	-20060131	
	40011609	PIPE-STEERING-TRG630		1	1	1	20060201-	O
10,11	40008176	PIPE ASSY-STR(LH)-G630		1	1	1	-20060131	
	40008144	PIPE ASSY-STR(LH)-G630		1	1	1	20060201-	O
10	40011193	PIPE-STEERING-TRG630		1	1	1	-20060131	
	40012551	PIPE-STEERING-TRG630		1	1	1	20060201-	O
11	40009978	JOINT-TRG630	BOM12-02G	5	5	5		
11,12	40007991	PIPE ASSY-STR/DRAIN-G630		1	1	1		
12	40011383	PIPE-STR/DRAIN-TRG630		1	1	1		
13	40028367	BOLT-HEX W/WS-S155062533	M6×1.0×25	1	1	1	20060201-	O

FIG. 7-1 G. 650

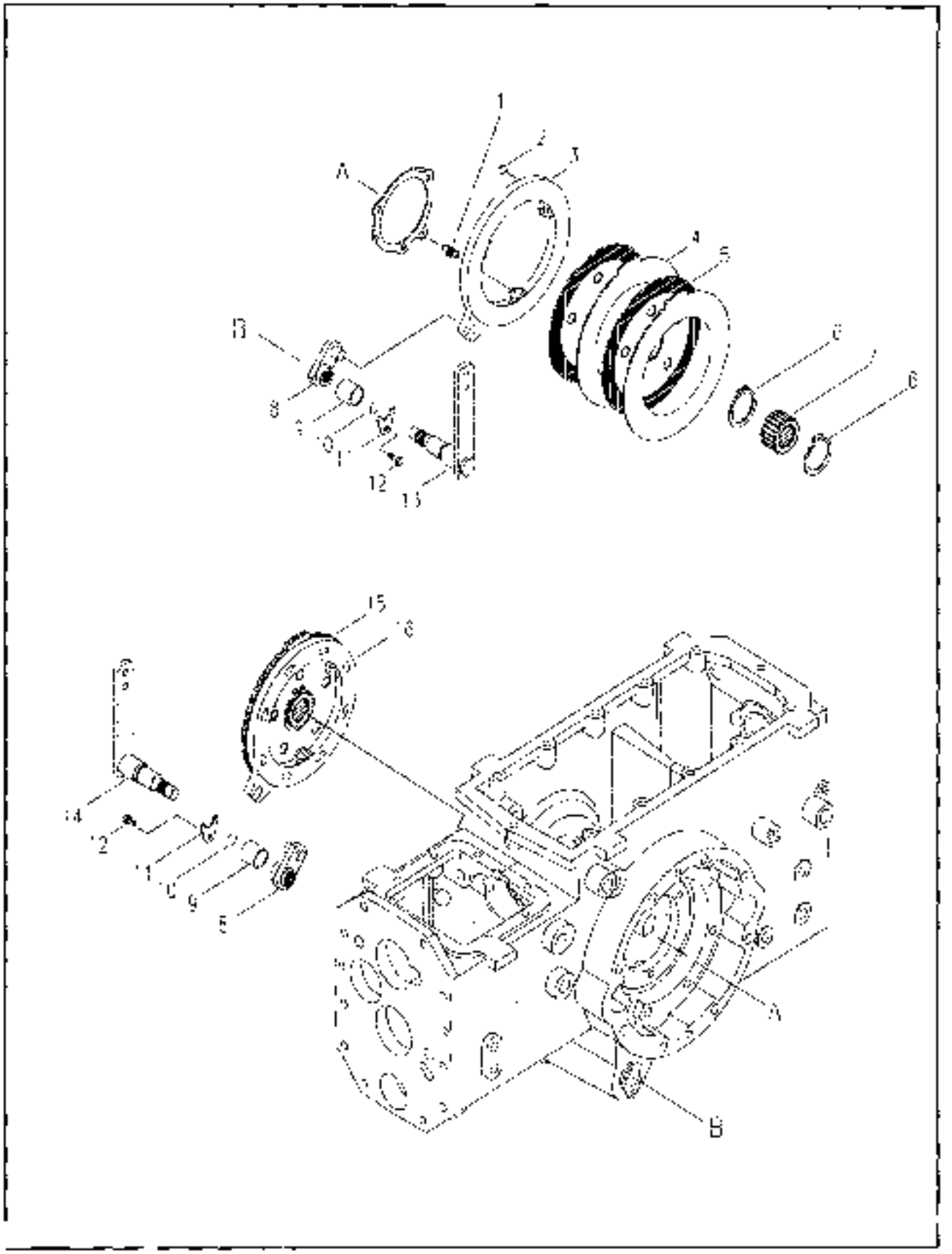

FIG. 7-1

NO.	PART NO	PART NAME & DESCRIPTION		QTY A	QTY B	QTY C	APP NO	REM.
1-7	40007720	BRAKE ASSY (LH)-TRG650		1	1	1		
1	40011857	SPRING-TRG650	D2	6	6	6		
2	40009462	BALL STEEL-TRG650	1/2"	16	16	16		
3	40009197	PLATE-CAM(LH)-TRG650		1	1	1		
4	40011290	PLATE PRESSURE TRG650		4	4	4		
5	40007721	DISC-PAPER-TRG650		4	4	4		
6	40028234	RING-SNAP-S610059001	D53.8x2t	4	4	4		
7	40009729	BOSS-SPLINE TRG650		2	2	2		
8	40012618	ARM-BRAKE INNER-TRG650		2	2	2		
9	40012919	BUSHING-DU-A0677815		2	2	2		
10	40029211	O-RING-S801025010		2	2	2		
11	40012375	PLATE-TRG650		2	2	2		
12	40028947	BOLT HEX WAVS-S154102033	M10x1.25x20L	2	2	2		
13	40011349	LEVER-BRAKE(LH)-TRG670		1	1	1		
14	40011350	LEVER-BRAKE(RH)-TRG670		1	1	1		
15	40007719	BRAKE ASSY-(RH)-TRG650		1	1	1		
16	40009196	PLATE-CAM(RH)-TRG650		1	1	1		

BRAKE PEDALS

FIG. 7-2 G. 670

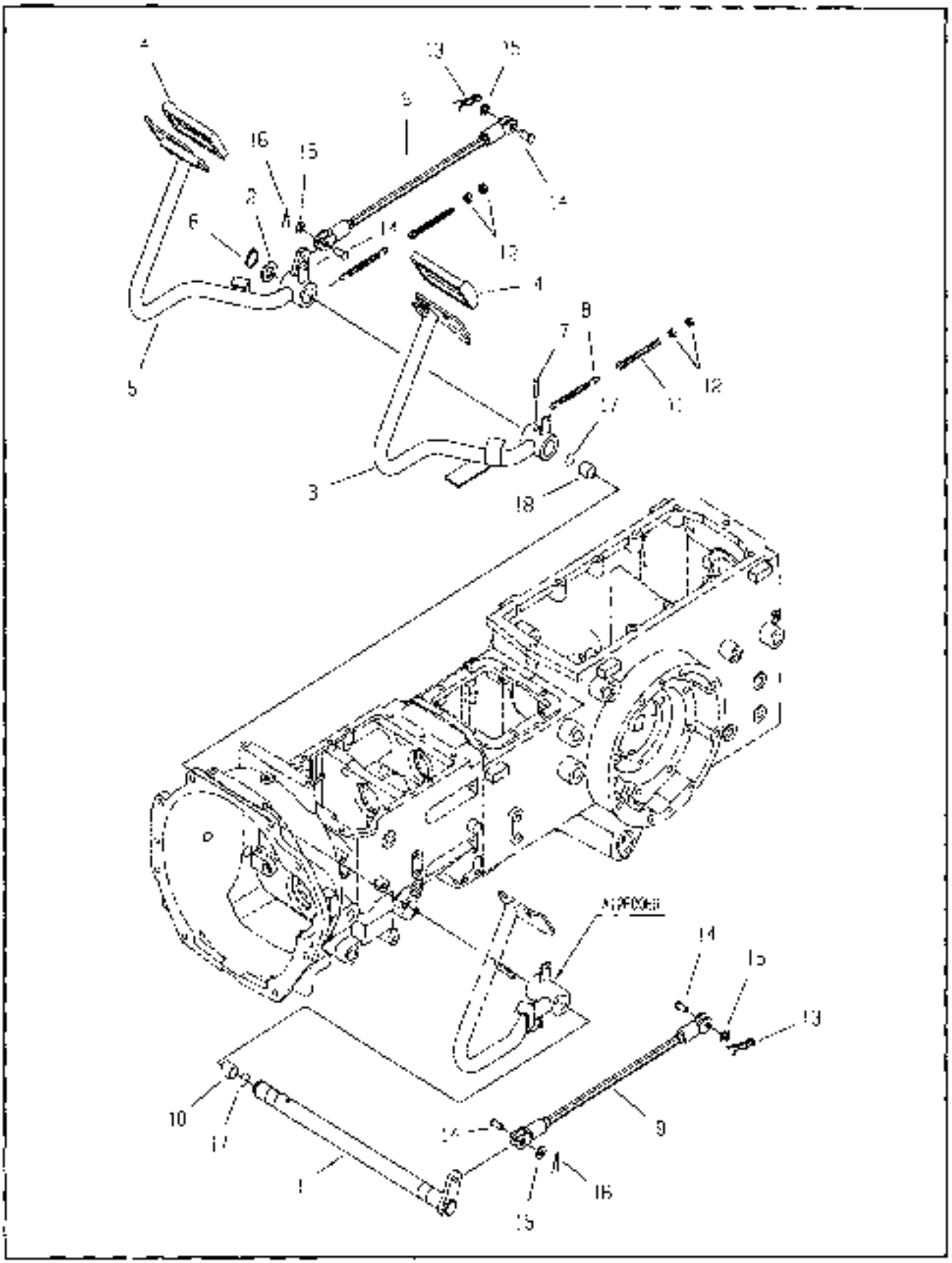

06-04 01 01

FIG. 7-2

NO	PART NO.	PART NAME & DESCRIPTION		QTY A	QTY B	QTY C	APP NO	RLM.
1	40011069	SHAFT-BRAKE PEDAL-TRG670		1	1	1		
2	40028194	WASHER-PLN-S364240013	OD44xID25x4.01	1	1	1		
3	40011270	PEDAL-BRAKE;LH)-TRG670		1	1	1		
4	40007382	PAD-PEDAL-TRG670		2	2	2		
5	40011153	PEDAL-BRAKE;RH)-TRG670		1	1	1		
6	40029771	RING-SNAP-S810025001	OD23.2x1.2	1	1	1		
7	40023179	PIN-SPRING S448094012	D8x40L	1	1	1		
8	40011867	SPRING-THG670		2	2	2		
9	40013046	BRAKE-ROD ASSY-G670		2	2	2		
10	40009874	BUSHING-OIL-TRG970	OD28xID25x20L	2	2	2		
11	40012138	BOLT ADJUST THG290	M8x1.25	2	2	2		
12	40028721	NUT-HEX 1 TY-S301080043	M8x1.25	4	4	4		
13	40029133	PIN-SNAP-S443120013	D12x35.8	2	2	2		
14	40009617	PIN-THG670	D10x26	4	4	4		
15	40023171	WASHER-PLN-S364100013	OD21xID10.5x2.0t	4	4	4		
16	40023121	PIN-SPLIT-S441220013	D2.5x20	2	2	2		
17	40029211	O RING-S801025010	D24.7xW3.5	2	2	2		

PARKING BRAKE

FIG. 7-3A G. 670

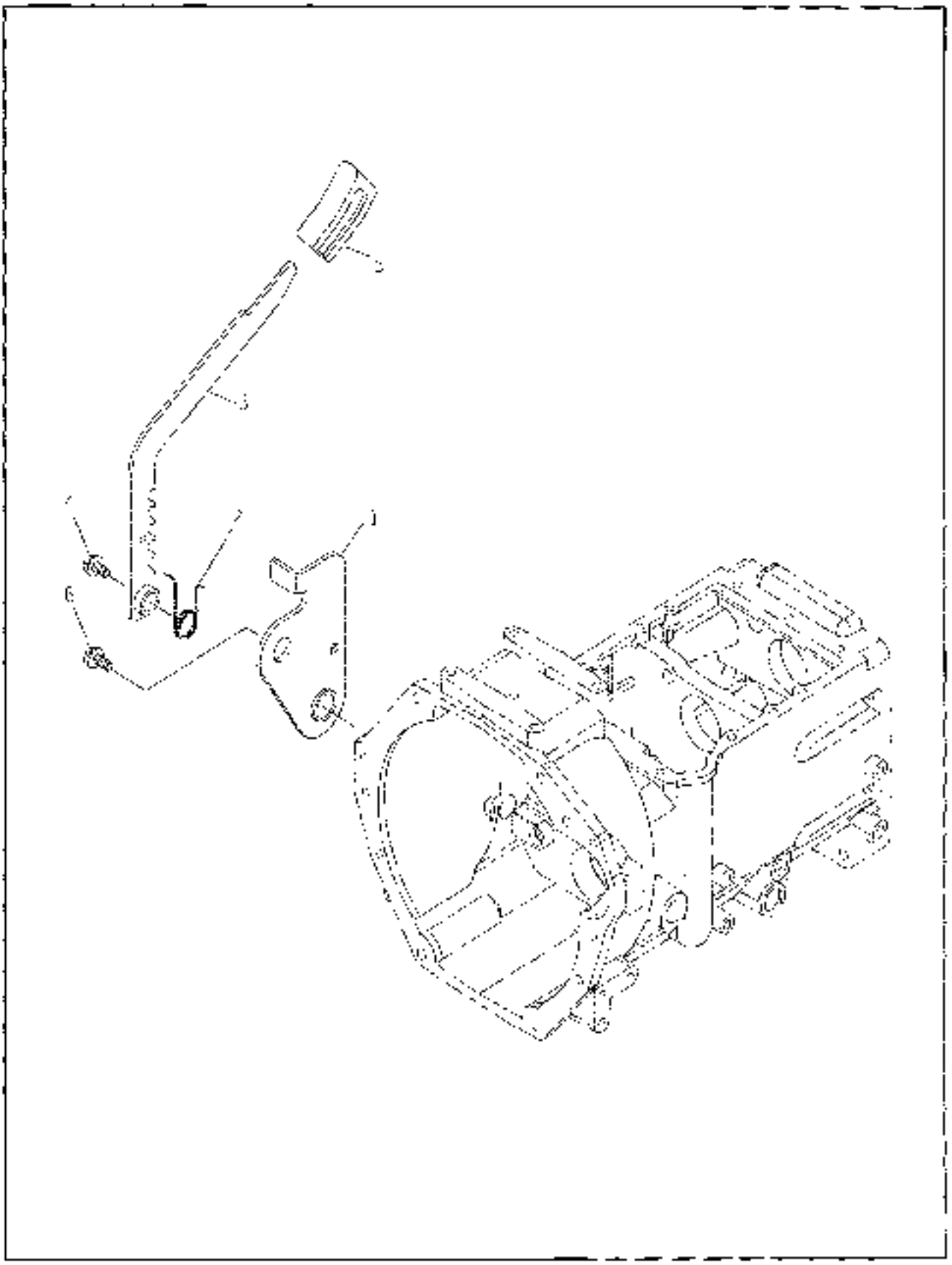

06-04-01 00

FIG. 7-3A

NO.	PART NO.	PART NAME & DESCRIPTION		QTY A	QTY B	QTY C	APP. NO	REM.
1	40012597	BRACKET-TRG670		1	1	-		
2	40012530	SPRING-TRG670		1	1	1		
3	40012537	RACHET PARKING-TRG870		1	1	1		
4	40028988	BOLT-HEX WWS-5156103533	M10x1.25	1	-	1		
5	40008375	KNOB-HYD. LIFT LEVER TRG970		1	1	1		
6	40028986	BOLT-HEX WWS-5156102533	M10x1.25x25	1	1	1		

FIG. 8-1B G. 730

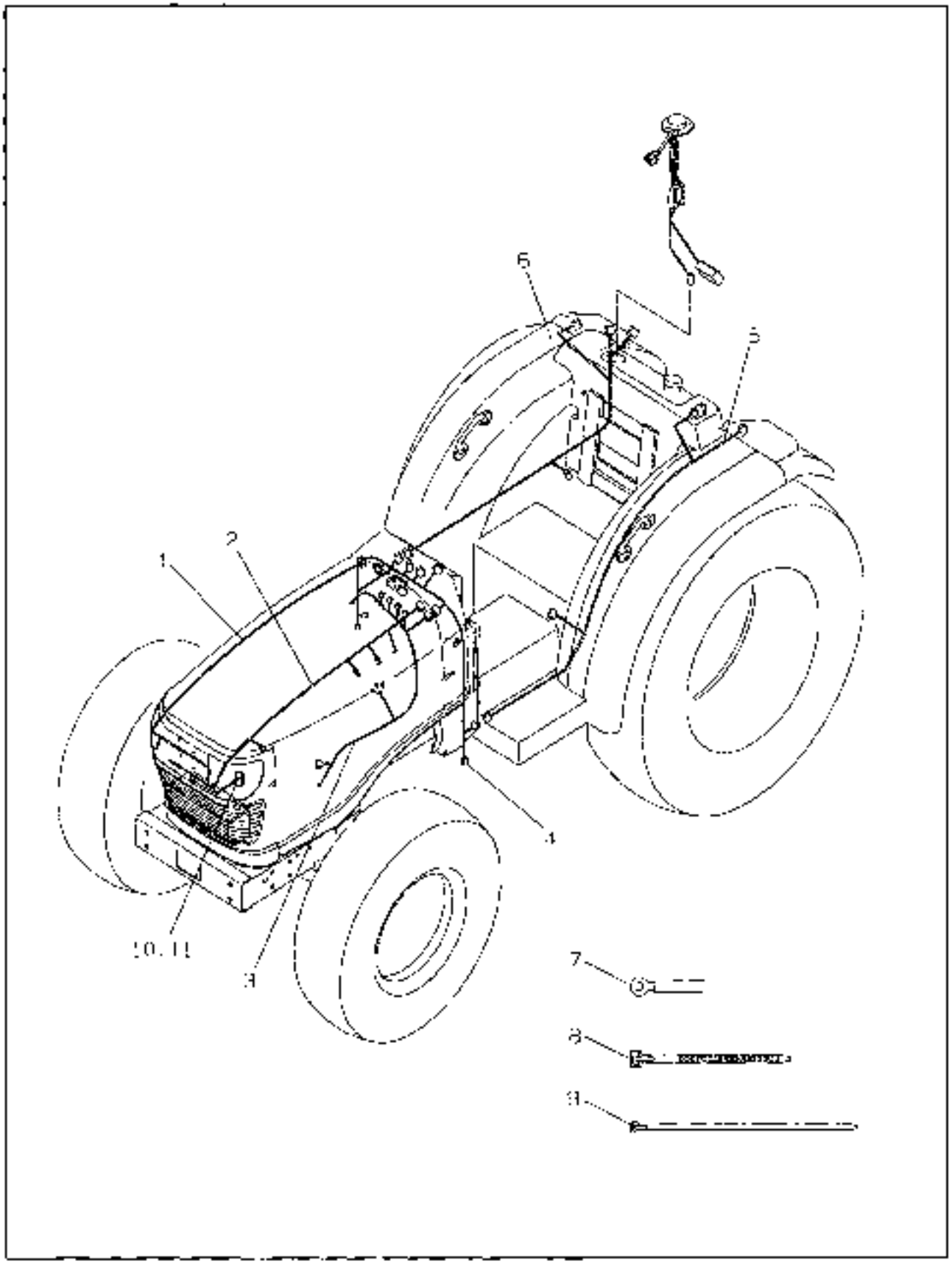

07-07-02 01

FIG. 8-1B

NO.	PART NO.	PART NAME & DESCRIPTION		QTY A	QTY B	QTY C	APP.NO	REM.
1	40007177	HARNESS-FRONT LIGHT-TRG730		1	1	1		
2	40007178	HARNESS-ENGINE SENSOR-TRG730		1	1	1		
3	40007080	HARNESS-ENGINE(S4L)-TRG730		1	1	1		
4	40007099	HARNESS-MAIN-TRG730		1	1	1		
5	40193666	HARNESS-REAR(LH)-TRG730		1	1	1		
6	40193665	HARNESS-MIDDLE-TRG730		1	1	1		
7	40012735	CLAMP-A0640015		5	5	5		
8	40012038	BAND-WIRE-A0540092		14	14	14		
9	40012891	BAND WIRE-A0640009		5	5	5		
10	40028958	BOLT-HEX W/WS-S155052033	M16X1.0X23L	1	1	1		
11	40007045	HORN-FLAT-TRG750		1	1	1		

BATTERY

FIG. 8-2 **G. 740**

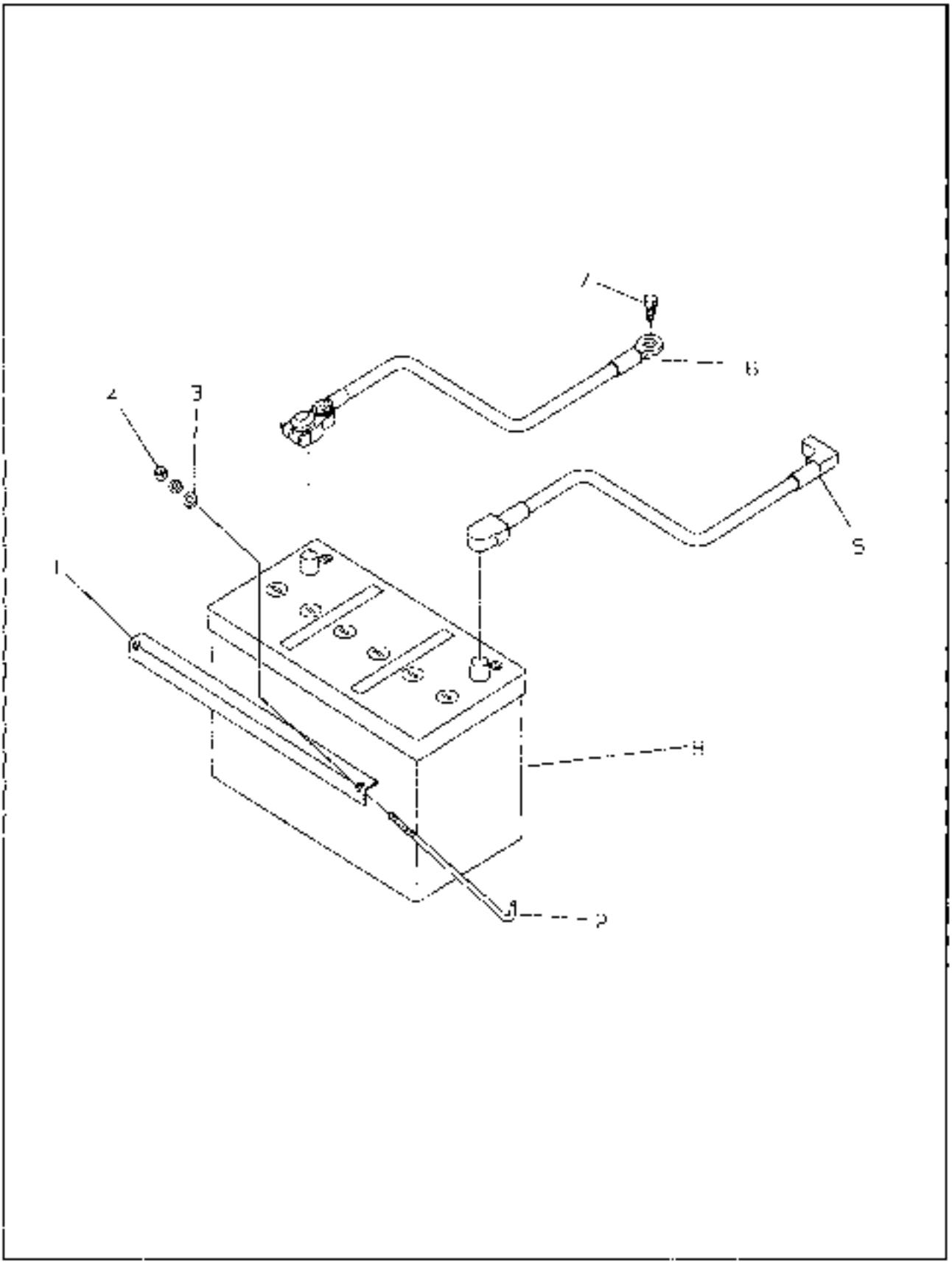

07-05-31 01

FIG. 8-2

NO.	PART NO	PART NAME & DESCRIPTION		QTY A	QTY B	QTY C	APP. NO	REM
1	40011840	CLAMP-BATTERY-TRG740		1	1	1		
2	40012533	ROD-BATTERY CLAMP TRG740		2	2	2		
3	40029567	WASHER-PLN-S363060013		2	2	2		
4	40028763	NUT-HEX 2 TY S305060013	M6	4	4	4		
5	40007158	CABLE-BATTERY()-TRG740		1	1	1		
6	40007156	CABLE-BATTERY()-TRG740		1	1	1		
7	40183617	BOLT-TAP TRG970	M8X1.25X25L	1	1	1		
8	40007097	BATTERY-MF-TRG740	12V-30Ah	1	1	1		

INSTRUMENT PANEL

FIG. 8-3B G. 750

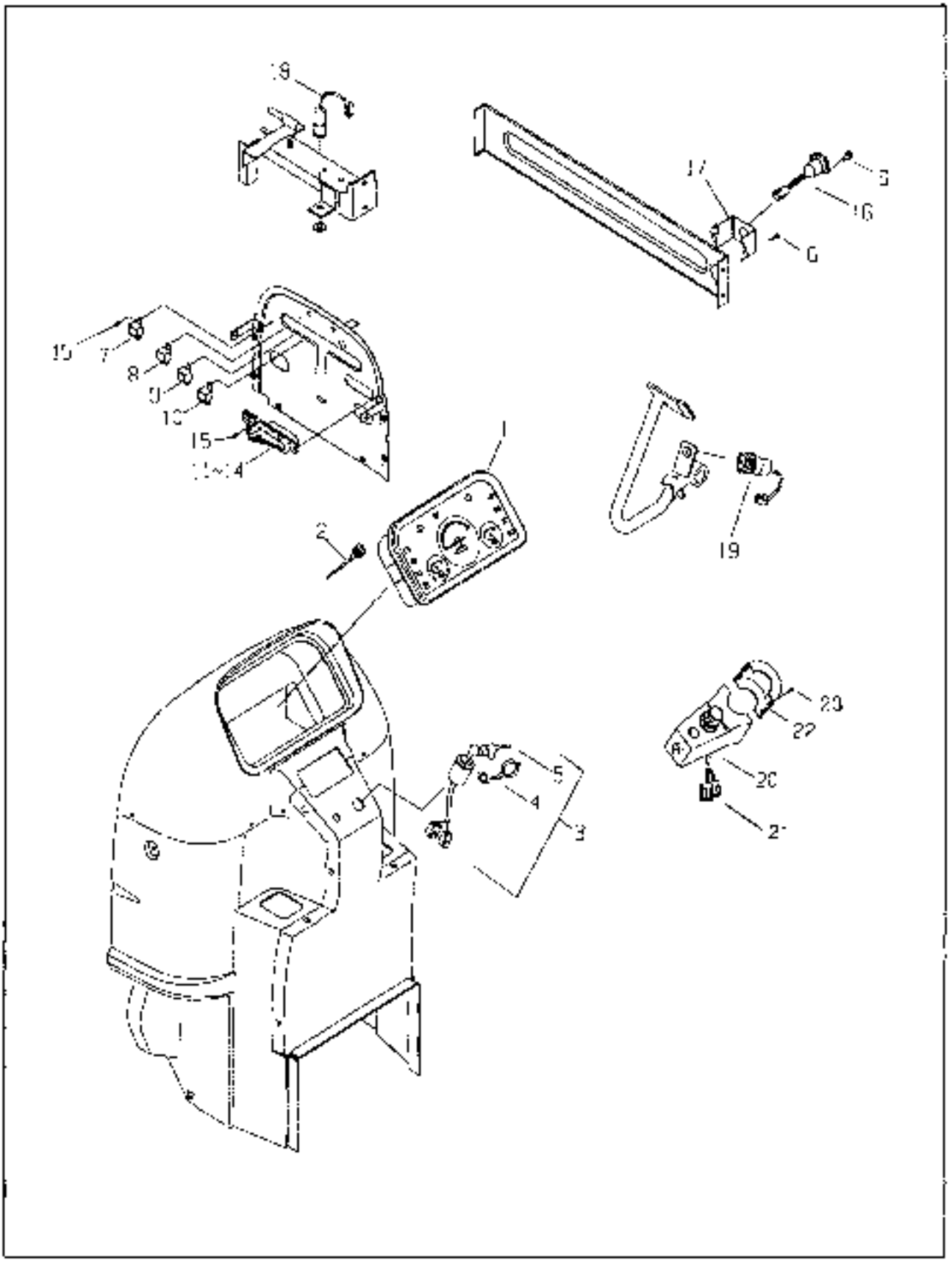

05-12-01 01

INSTRUMENT PANEL

FIG. 8-3B

NO.	PART NO.	PART NAME & DESCRIPTION		QTY A	QTY B	QTY C	APP. NO	REM.
1	40007035	PANEL-INSTRUMENT-TRG750		1	1	1		
-	40007201	LAMP-INDICATOR-TRG750	12V, 1.4W	8	6	8		
-	40007204	LAMP-INDICATOR-TRG750	12V, 3.4W	6	6	6		
2	40007887	CABLE-TACHOMETER-TRG750		1	1	1		
3	20020343	SWITCH ASSY-KEY-TRG750		1	1	1		
4	40009420	CAP-KEY-TRG750		1	1	1		
5	40012864	KEY-START-TRG750		1	1	1		
6	40028970	BOLT-HEX WWS-S1556061633	M8X1.25X16	4	4	4		OPT
7	40007069	RELAY-GLOW-TRG750		1	1	1		
8	40007086	TIMER-GLOW-TRG750		1	1	1		
9	40007175	RELAY-START-TRG750		1	1	1		
10	40007184	RELAY-CRG003		1	1	1		
11~14	40007084	BOX ASSY-FUSE-TRG750		1	1	1		
11	*	BOX-FUSE-CRG008		1	1	1		
12	40012888	FUSE-10A-A0751005	10A	4	4	4		
13	40012889	FUSE-15A-A0751006	15A	3	3	3		
14	40012890	FUSE-20A-A0751007	20A	2	2	2		
15	40028996	BOLT-HEX WWS-S1556061633	M8X1.25X16	6	6	6		
16	40007081	CONNECTOR ASSY-7P(ASAE)-TRG750		1	1	1		OPT
17	40011787	BRACKET-7P(ASAE)-TRG750		1	1	1		OPT
18	20020341	SWITCH MICRO-TRG750		1	1	1		
19	40007152	SWITCH ASSY-START/PTO-TRG750		1	1	1		
20~21	40007063	SWITCH ASSY-COMBI-TRG750		1	1	1		
20	40006209	COVER-COMBI SWITCH-TRG750		1	1	1		
21	40007049	SWITCH-COMBI-TRG750		1	1	1		
22	40006300	COVER-COMBI SWITCH-TRG750		1	1	1		
23	40028602	SCREW-CROSS RD-S224402511	M4X0.7X25L	4	4	4		

LAMP

FIG. 8-4B **G. 760**

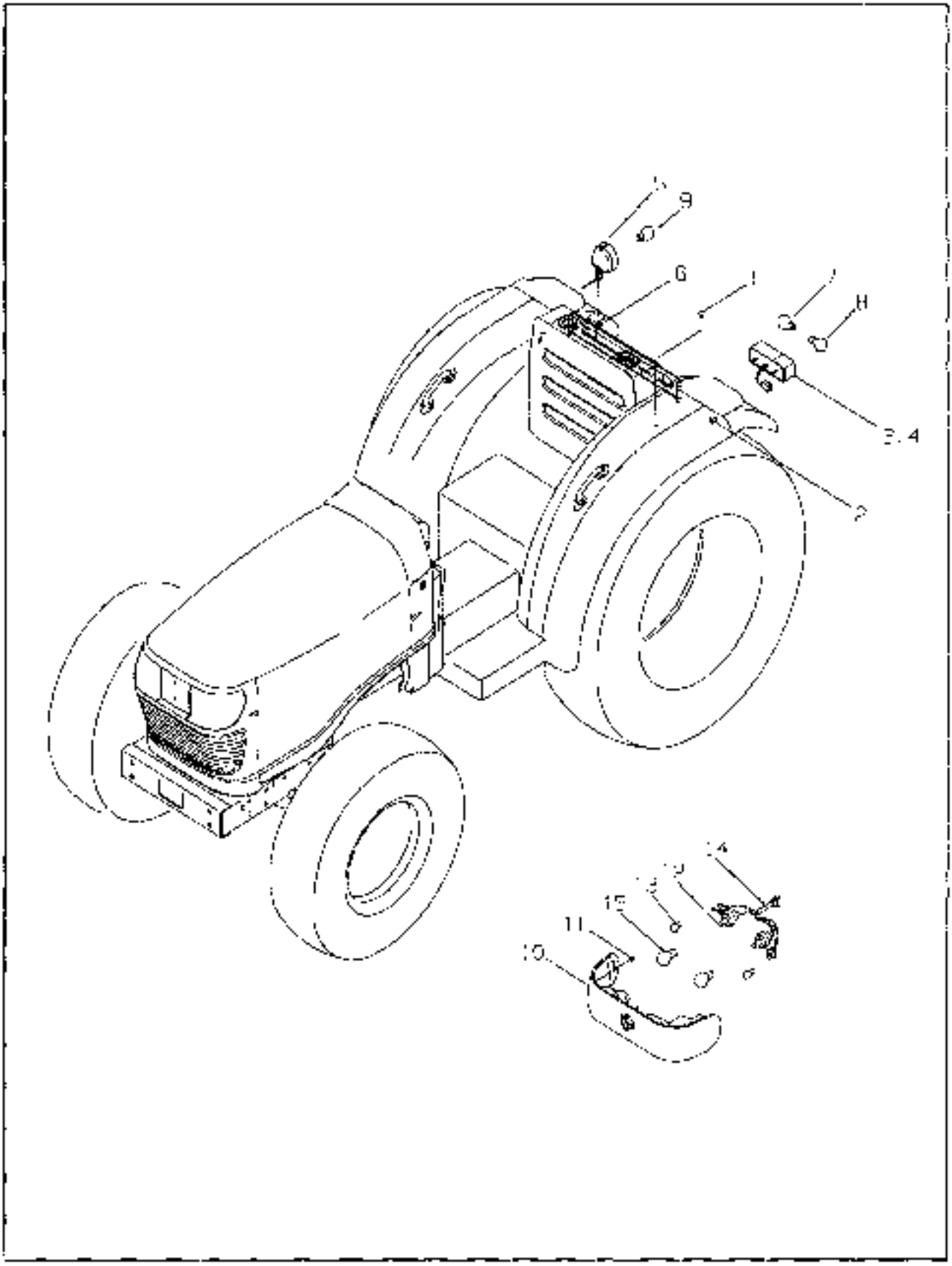

06-04-01 00

FIG. B-4B

NO.	PART NO.	PART NAME & DESCRIPTION		QTY A	QTY B	QTY C	APP. NO	REM
1	40012767	PLUG-A06'0083		2	2	2		
2	40025765	NUT-HEX 2 TY-S305260043	M6X1.0P	6	4	4		
3	40007013	LAMP ASSY-REAR COMB (RH)-TRG760		1	1	1		
4	40007016	LAMP ASSY-REAR COMB(LH)-TRG760		1	1	1		
5	40007300	LAMP ASSY-WORK-TRG760		1	1	1		
6	40029040	NUT HEX SMALL S310800013	M8X1.25P	1	1	1		
7	40152755	BULB-SIGNALLAMP-A1760042	12V10/5W	2	2	2		
8	40040364	BULB-COMBI LAMP A1760041	12V/8W	2	2	2		
9	40007203	BULB 23W-TRG760		1	1	1		
10~15	40007014	LAMP ASSY-HEAD-TRG760		1	1	1		
10	40008439	LENS-HEAD LAMP TRG760		1	1	1		
11	40028073	NUT-FLANGE-S3153600'3	M8x0.8	4	4	4		
12	40007436	CAP-RUBBER-TRG976		1	1	1		
13	40007205	LAMP-TURN SIGNAL-TRG760		2	2	2		
14	40007216	HARNESS-HEAD LAMP TRG732		1	1	1		
15	40007206	LAMP-HEAD-TRG760	12V55/35W	2	2	2		

HYDRAULIC HOUSING

FIG. 9-1A

G. 820

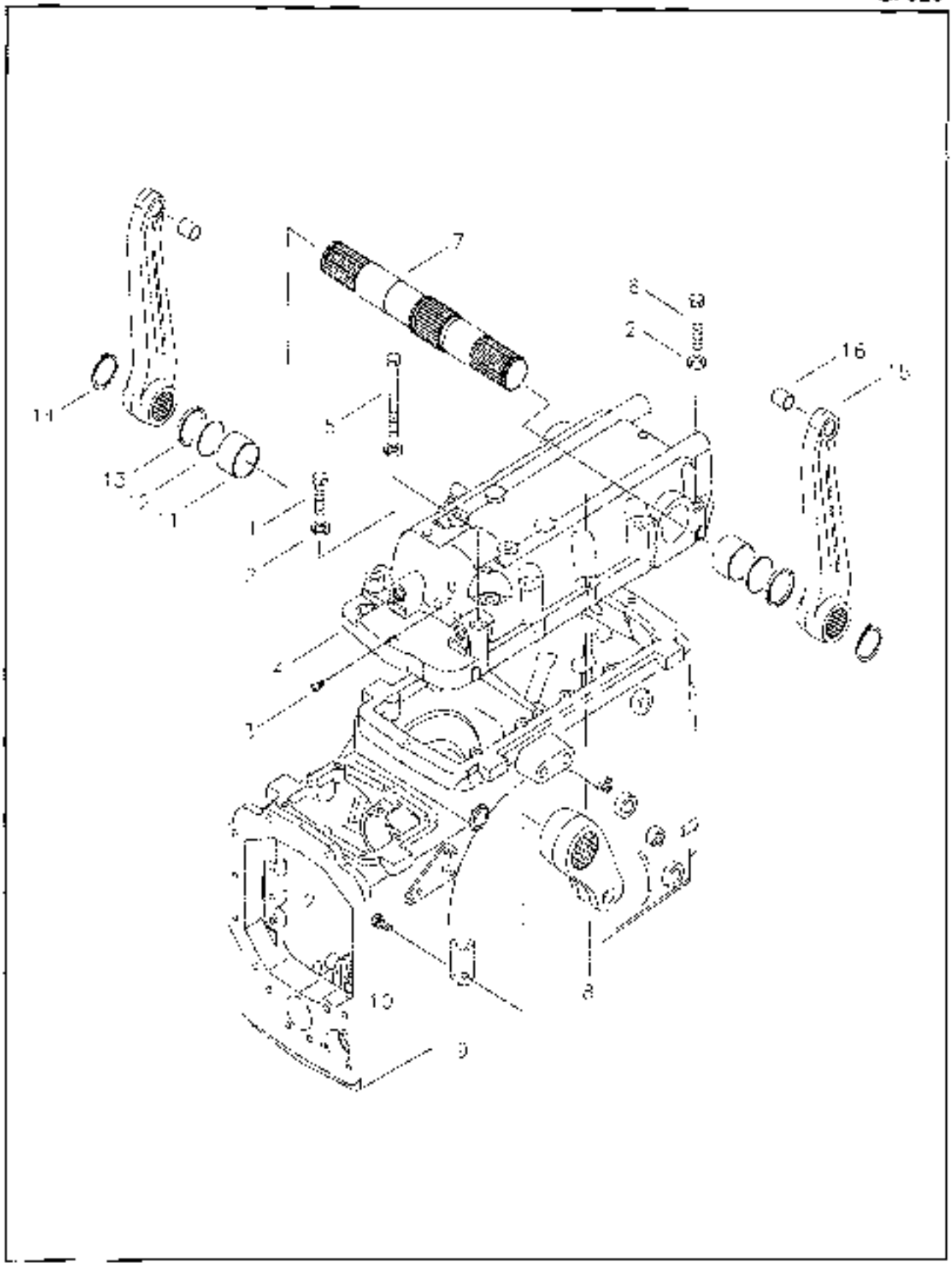

04-07-01

00

HYDRAULIC HOUSING

FIG. 9-1A

NO	PART NO.	PART NAME & DESCRIPTION		QTY A	QTY B	QTY C	APP. NO	REM
1	40028873	BOLT-HEX-S105124542	M12×1.75×45	4	4	4		
2	40029551	WASHER-SPR-S381120013	Φ21.5×Φ12.2×3	12	12	12		
3	40009792	PLUG-AIR BRENT-TRG250		1	1	1		
4	40010307	HOUSING-HYDRAULIC-TRG920		1	1	1		
5	40028879	BOLT-HEX-S105128543	M12×1.75×65	4	4	4		
6	40028876	BOLT-HEX-S105126043	M12×1.75×60	4	4	4		
7	40008965	SHAFT-HYDLIFT-TRG821		1	1	1		
8	40009444	ARM POWER-TRG921		1	1	1		
9	40011870	PLATE-LOCK-TRG826		1	1	1		
10	40028819	BOLT-HEX W/WS-S153081633	M8×1.25×16	1	1	1		
11	40009718	BUSHING-HYDLIFT SHAFT-TRG821	Φ45×Φ50×30	2	2	2		
12	40029223	O-RING-S802045010	D44.4×3.1	2	2	2		
13	40009344	DOLLAR DUST-TRG821	Φ45×Φ60×5	2	2	2		
14	40029278	RING-SNAP-S8100420001	Φ38.5	2	2	2		
15	40009436	ARM LIFT-TRG921		2	2	2		
16	40003651	BUSHING-LIFT ARM-TRG921	Φ19×Φ22×25	2	2	2		

04-07-01

00

HYDRAULIC HOUSING

FIG. 9-1B G. 820

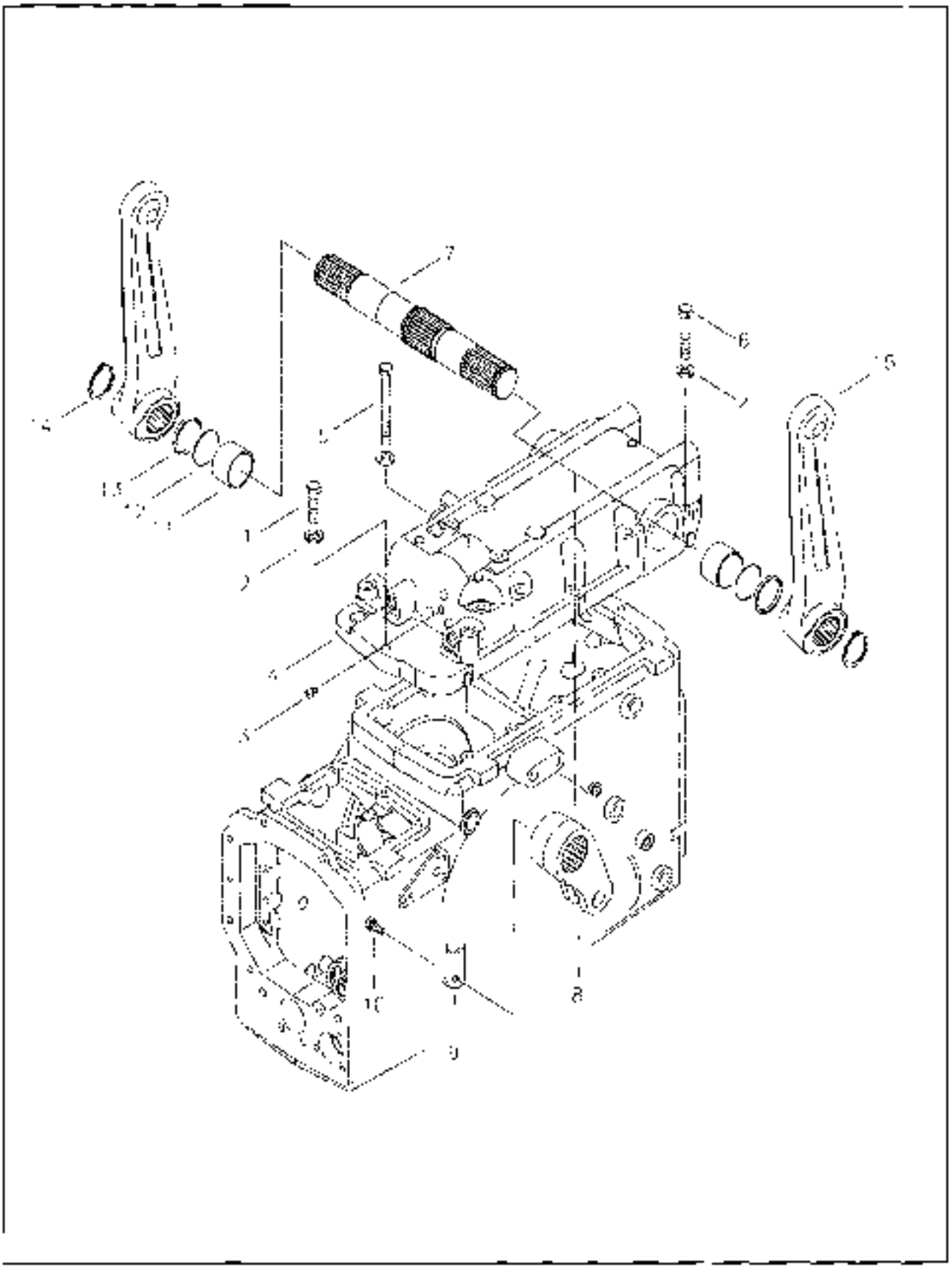

HYDRAULIC HOUSING

FIG. 9-1B (AUTO/L)

NO	PART NO	PART NAME & DESCRIPTION		QTY A	QTY B	QTY C	APP.NO	REM.
1	40028875	BOLT-HEX-S105124543	M12×1.75×45	4	4	4		
2	40029551	WASHER-SPR-S361120310	φ21.5×φ12.2×3t	12	12	12		
3	40009792	PLUG AIR BENT-TRG250		1	1	1		
4	40010387	HOUSING-HYDRAULIC-TRG820		1	1	1		
5	40028879	BOLT-HEX-S105128543	M12×1.75×65	4	4	4		
6	40028878	BOLT-HEX-S105126543	M12×1.75×60	4	4	4		
7	40008985	SHAFT-HYD/LIFT-TRG821		1	1	1		
8	40009444	ARM-POWER-TRG821		1	1	1		
9	40011870	PLATE-LOCK-TRG826		1	1	1		
10	40028919	BOLT-HEX WWS-S153081633	M8×1.25×16	1	1	1		
11	40009718	BUSHING-HYD/LIFT SHAFT-TRG821	φ45×φ50×30	2	2	2		
12	40029222	O-RING-S802345310	D14.4×3.1	2	2	2		
13	40018344	COLLAR-DUST-TRG821	φ45×φ52×5	2	2	2		
14	40029278	RING-SNAP-S810042301	φ38.5	2	2	2		
15	40006047	ARM ASSY-LIFT-0821		2	2	2		

LIFT CONTROL VALVE & LINK

FIG. 9-2B

G. 822

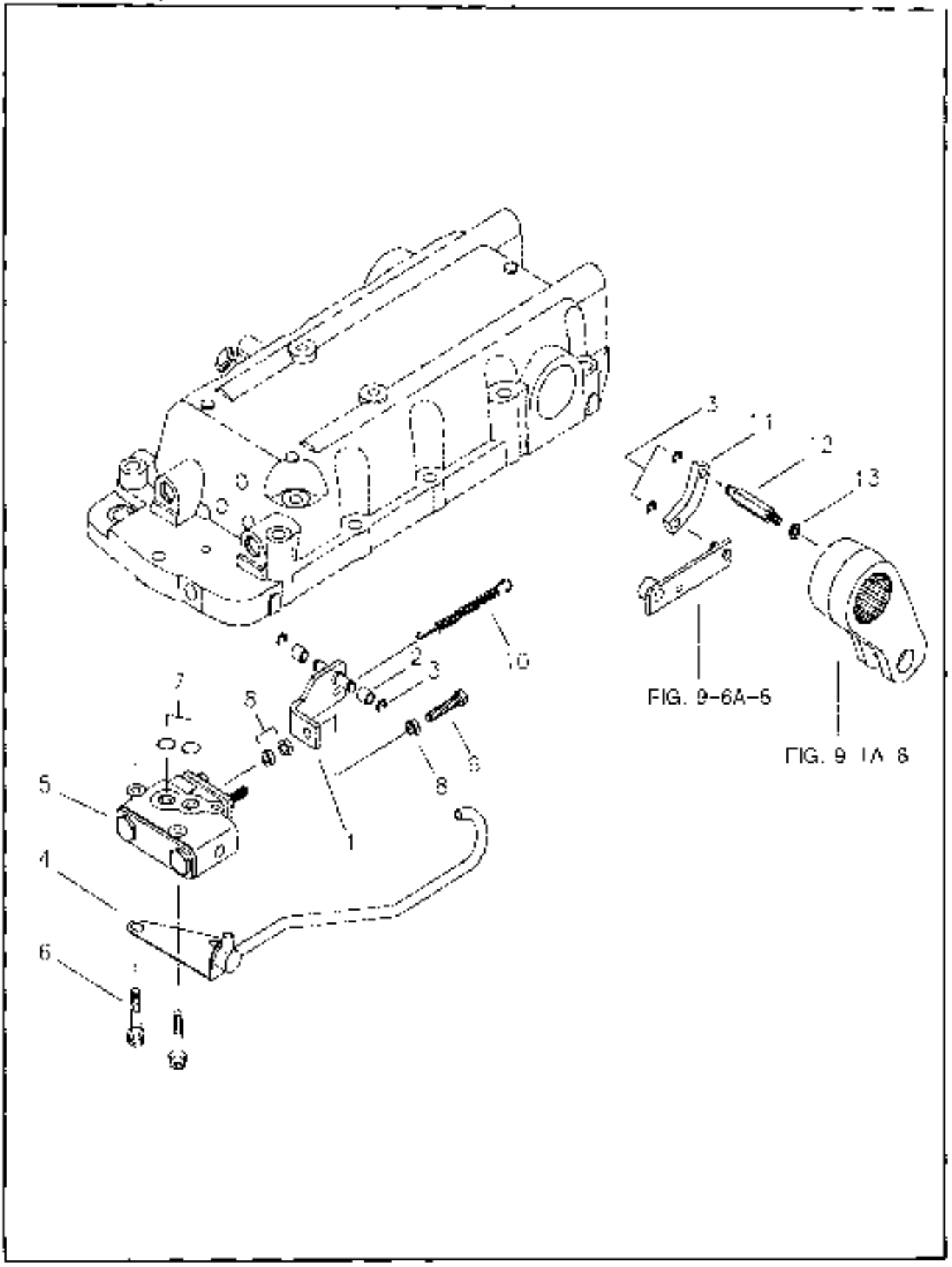

LIFT CONTROL VALVE & LINK

A-C3030, B-C3036, C-C3040

FIG. 9-2B **(DRAFT CONTROL)**

NO.	PART NO.	PART NAME & DESCRIPTION		QTY A	QTY B	QTY C	APP. NO	REM
1-3	40008185	CLEVIS ASSY-G824		1	1	1		
1	*	CLEVIS-TRG824		1	1	1		
2	*	ROLLER-TRG822	Φ12×Φ8×12.5	2	2	2		
3	40029314	RING-SNAP-S814008003	Φ6	4	4	4		
4	40011603	PIPE-LUBRICATE-TRG822		1	1	1		
5	40007577	VALVE-CONTROL-TRG822		1	1	1		
6	40028976	BOLT-HEX W/WS-S155085033	M8×1.25×50	3	3	3		
7	40029200	O-RING-S801312020	D11.8×2.4	2	2	2		
8	40029041	NUT-HEX SMALL-S313080043	M8×1.25	3	3	3		
9	40029495	BOLT-HEX FT-S163085043	M8×1.25×50	1	1	1		
10	40011934	SPRING-TRG822		1	1	1		
11	40012348	LINK-E-TRG822		1	1	1		
12	40009804	PIN-TRG822	H12	1	1	1		
13	40029546	WASHER-SPR-S351080013	Φ15.4×Φ8.2×2t	1	1	1		

TM CONTROL VALVE

FIG. 9-3 G. 822

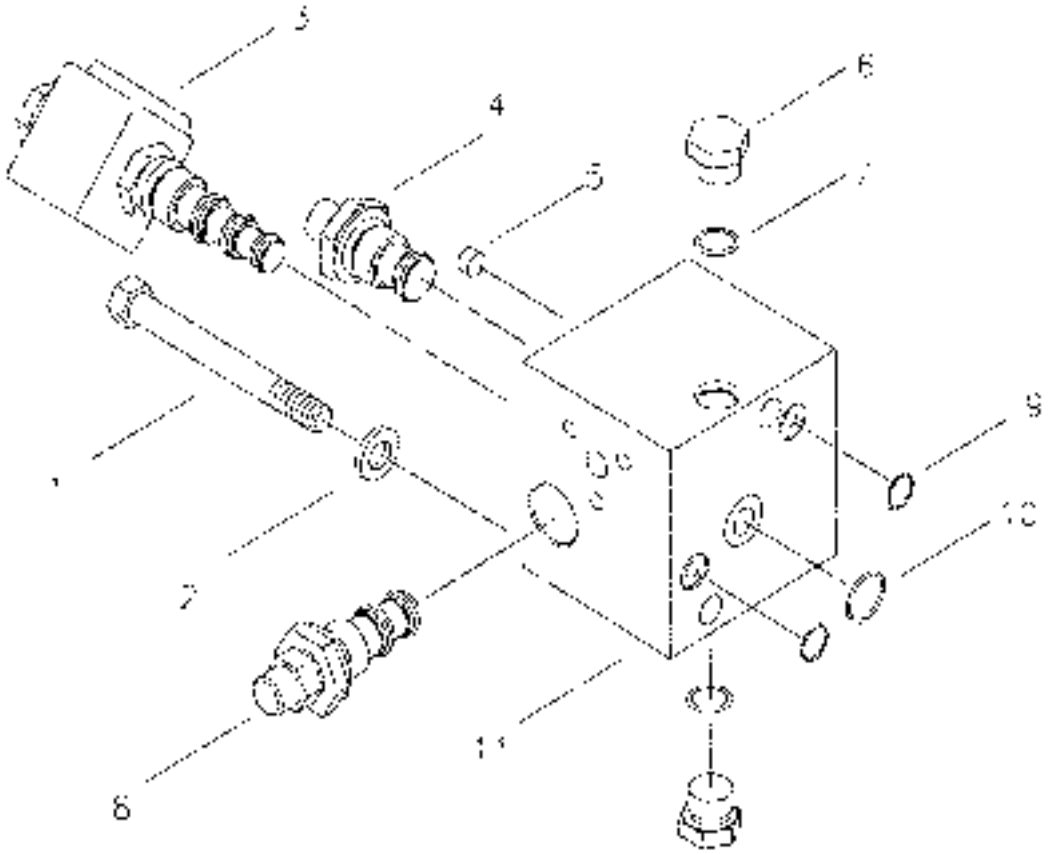

04-07-01 00

TM CONTROL VALVE

FIG. 9-3

NO	PART NO.	PART NAME & DESCRIPTION		QTY A	QTY B	QTY C	APP.NO	REM.
1	40028869	BOLT-HEX-S107109043	M10×1.25×90	2	*	2		
2	40029549	WASHER SPR S361100013	Φ10.4×Φ10.2×2.5t	2	*	2		
3~11	40008099	VALVE ASSY-IND/PTO-TRG822		1	*	1		
3	40007701	VALVE-SOLENOID-TRG822		1	*	1		
4	40007686	VALVE SEQUENCE-TRG822		1	*	1		
5	40007973	ORIFICE-TRG822	Φ1.5	1	*	1		
6	40008440	PLUG-TRG822	PF1/4	2	*	2		
7	40029197	O-RING-S801011010	D10.8x2.4	2	*	2		
8	40007706	VALVE REDUCING TRG822		1	*	1		
9	40029198	O-RING-S801011011	D9.8x2.4	2	*	2		
10	40029208	O RING-S801018010	D17.8x2.4	1	*	1		
11	40009309	BLOCK-PTO VALVE-TRG822		1	*	1		

04-07-01

00

FRONT OUTLET & LOADER VALVE

FIG. 9-4 G. 822

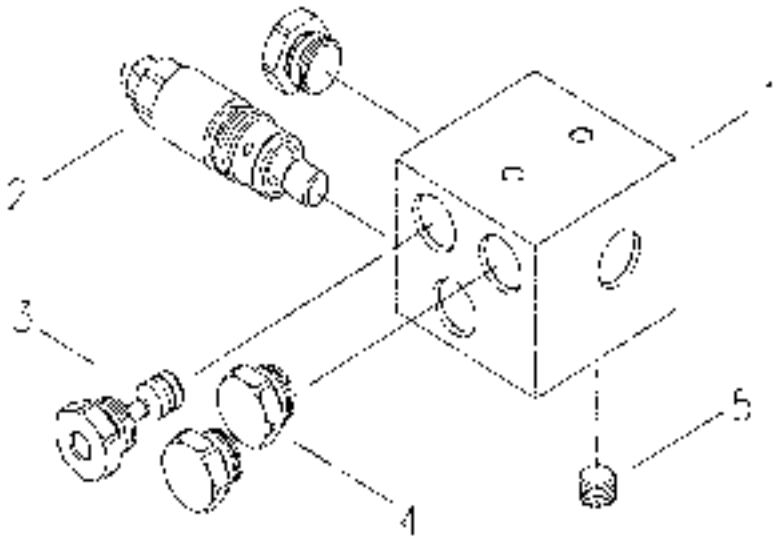

04-07-01 00

FRONT OUTLET & LOADER VALVE

FIG. 9-4

NO	PART NO.	PART NAME & DESCRIPTION		QTY A	QTY B	QTY C	APP NO	REM
1-5	40008068	VALVE ASSY-FOUT-TRG822		1	*	*		
1	40009388	BLOCK-FOUTLET VALVE-TRG822		1	*	1		
2	40007689	VALVE FRLIEF-TRG822		1	*	1		
3	40008145	PLUG ASSY-CARRY OVER-GR22		1	*	1		
4	40009813	PLUG TRG822	PT1/2	3	*	3		
5	40012645	PLUG-TAPER-A06:D168	PT1/4	1	*	1		

HYDRAULIC PIPE LINE

FIG. 9-5C **G. 823**

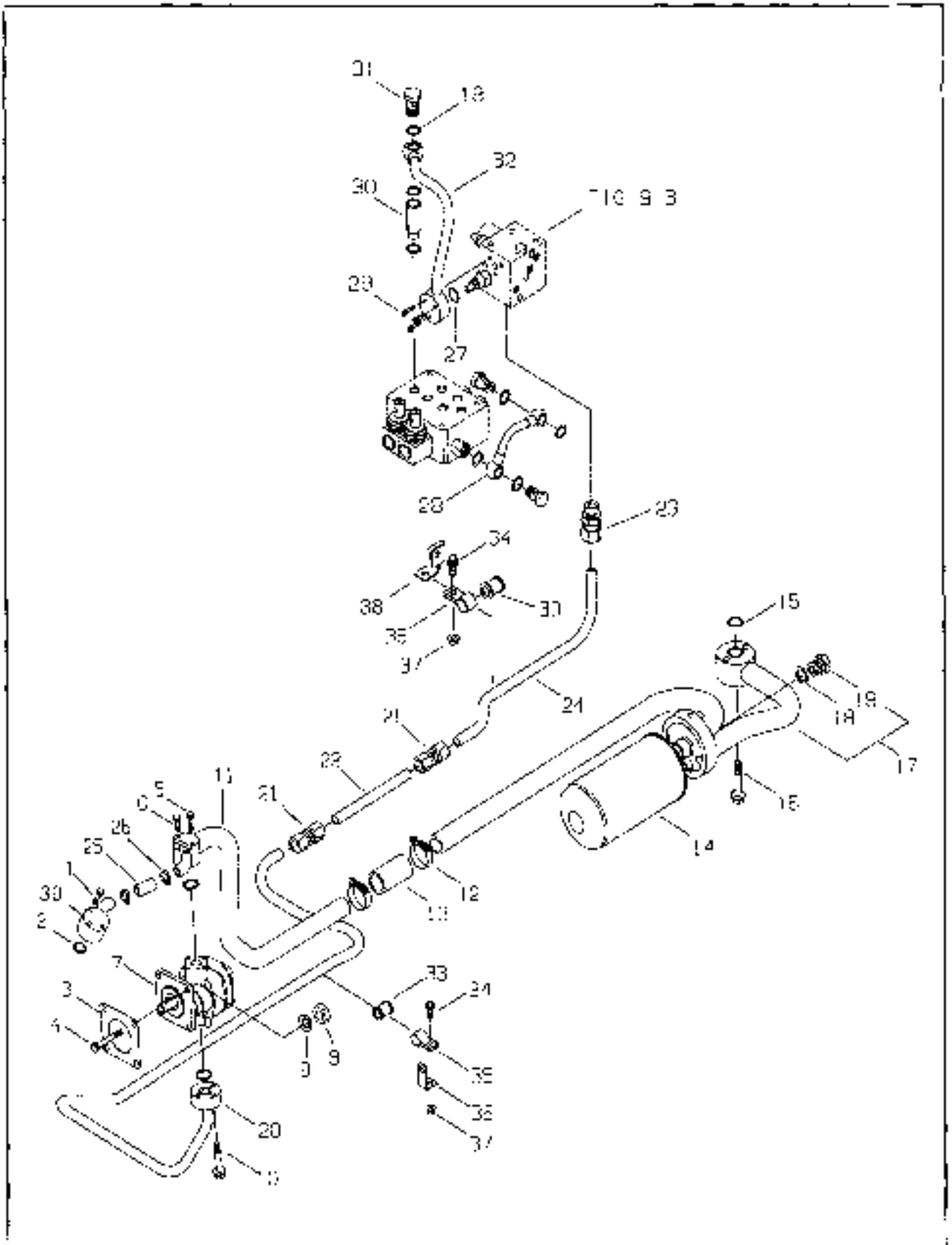

FIG. 9-5C

(INDP)

NO.	PART NO.	PART NAME & DESCRIPTION		QTY A	QTY B	QTY C	APP. NO	REM.
1	40028916	BOLT-HEX WWS-S153064033	M6×1.0×45	3	*	3		
2	40029206	O RING S801018010	D17.8×D2.4	3	*	3		
3	40006908	PACKING-HYD/PUMP-TRG823	0.6l	1	*	1		
4	40009564	BOLT-HEX-TRG970	M8×1.25×150	2	*	2		
5	40028817	BOLT-HEX WWS-S153066033	M6×1.0×55	3	*	2		
6	40028915	BOLT-HEX WWS-S153064033	M6×1.0×40	1	*	1		
7	40007618	PUMP-MAIN-TRG825	12cc/rev	1	*	1		
8	40028946	WASHER-SPR-S351090013	D8.2×2t	4	*	4		
9	40029041	NUT-HEX SMALL-S313060043	M8×1.25	4	*	4		
10	40028813	BOLT-HEX WWS-S153063033	M6×1.0×30	3	*	3		
11	40011561	PIPE-F/SUCTION-TRG823		1	*	1		
12	40012013	CLAMP-HOSE-TRG970	27-50	2	*	2		
13	40007609	HOSE-SUCTION-TRG823		1	*	1		
14	40007638	FILTER-HYD/OIL-TRG823		1	*	1		
15	40029216	O RING-S0010260 0	D25.5×2.0	1	*	1		
16	40028954	BOLT-HEX WWS-S154105533	M10×1.25×55	2	*	2		
17	40011365	PIPE-R/SUCTION-TRG823		1	*	1		
18	40012445	SEAL-BONDED-TRG823	DC24×D16.8×1.5t	8	*	6		
19	40012140	PLUG-TRG823	PT3/8	1	*	1		
20~24	40008181	PIPE ASSY-PRS/WFS-G823		1	*	1		
20	40011736	PIPE-F/PRESSURE-TRG823		1	*	1		
21	40008184	UNION ASSY STRAIGHT-G823	BU-15	2	*	2		
22	40012413	PIPE-M/PRESSURE-TRG823		1	*	1		
23	40010153	JOINT-TRG823	BOM15-03G	1	*	1		
24	40011553	PIPE-M/PRESSURE-TRG823		1	*	1		
25	40007604	HOSE-SUCTION-TRG825		1	*	1		
26	40012010	CLAMP HOSE TRG970		2	*	2		
27	40029204	O RING S801016010	D15.8×D2.4	1	*	1		
28	40011737	PIPE-F/OUTLET DRAIN TRG823	Φ12X1.0t	1	*	1		
29	40028854	BOLT HEX WWS-S153063533	M6×1.0×35	3	*	3		
30	40010252	CONNECTOR-UNION-TRG827		1	*	1		
31	40010374	BOLT-UNION-TRG830	PF3/8	3	*	3		
32	40011237	PIPE REMOCON PRS-TRG823	Φ15X1.5t	1	*	1		
33	40007408	CUSHION-PIPE CLAMP-TRG823		2	*	2		
34	40028973	BOLT-HEX WWS-S156082533	M8×1.25×25	2	*	2		
35	40012564	CLAMP-PIPE-TRG823		2	*	2		
36	40011831	BRACKET-CLAMP-TRG823		1	*	1		
37	40029176	NUT-FLANGE-S315080013	M8×1.25	2	*	2		
38	40012209	BRACKET-PIPE CLAMP-TRG823		1	*	1		
39	40012418	ADAPTOR-F/SUCTION(ACL)-TRG823		1	*	1		

HYDRAULIC LINKAGE

FIG. 9-6B **G. 824**

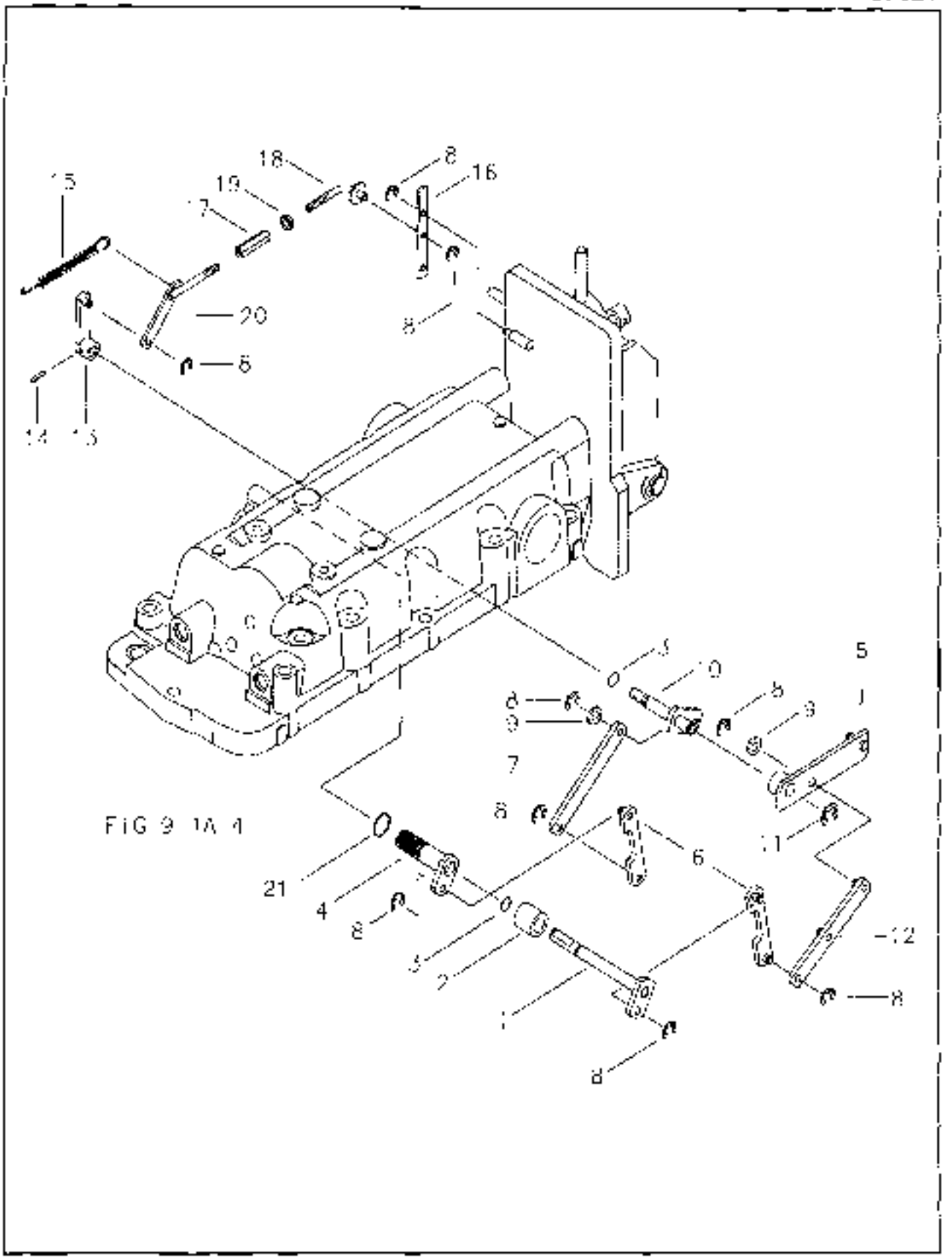

FIG 9 1A 4

06-12-01 C2

FIG. 9-6B (DRAFT CONTROL)

NO	PART NO	PART NAME & DESCRIPTION		QTY A	QTY B	QTY C	APP.NO	REM.
1~12	40000074	SHAFT-POSITION-TRG824		1	1	1		
1	*	SHAFT-POSITION-TRG824		1	1	1		
2	*	SPACER-TRG824	D20×D12×23.5	1	1	1		
3	40029193	O-RING-S801009010	D8.8×1.9	2	2	2		
4	*	SHAFT-DRAFT CTRL-TRG824		1	1	1		
5	*	LINK-TRG824		1	1	1		
6	*	LINK B-TRG824		2	2	2		
7	*	LINK-DRAFT-TRG824		1	1	1		
8	40029314	RING-SNAP-S814006003	D6	8	8	8		
9	40028169	WASHER-PLN-S364000013	D17×D8.4×1.6t	2	2	2		
10	*	SHAFT-DRAFT-TRG824		1	1	1		
11	40029318	RING-SNAP-S814009003	D9	1	1	1		
12	*	LINK-POSITION-TRG824		1	1	1		
13	40012558	ARM-DRAFT LINK-TRG824		1	1	1		
14	40029157	PIN-SPRING-S4460420 2	D4×20	1	1	1		
15	40011935	SPRING-TRG824		1	1	1		
16~20	40006155	DRAFT LINK ASSY		1	1	1		
16	*	LINK-PACK-TRG824		1	1	1		
17	*	ADJUST-TRG824		1	1	1		
18	*	ROD-A-TRG824		1	1	1		
19	40029041	NUT-HEX SMALL S3130900043		1	1	1		
20	*	ROD-B-TRG824		1	1	1		
21	40029204	O-RING-S801016010	D15.8×2.4	1	1	1		

HYDRAULIC CONTROL LEVER

FIG. 9-7B G. 825

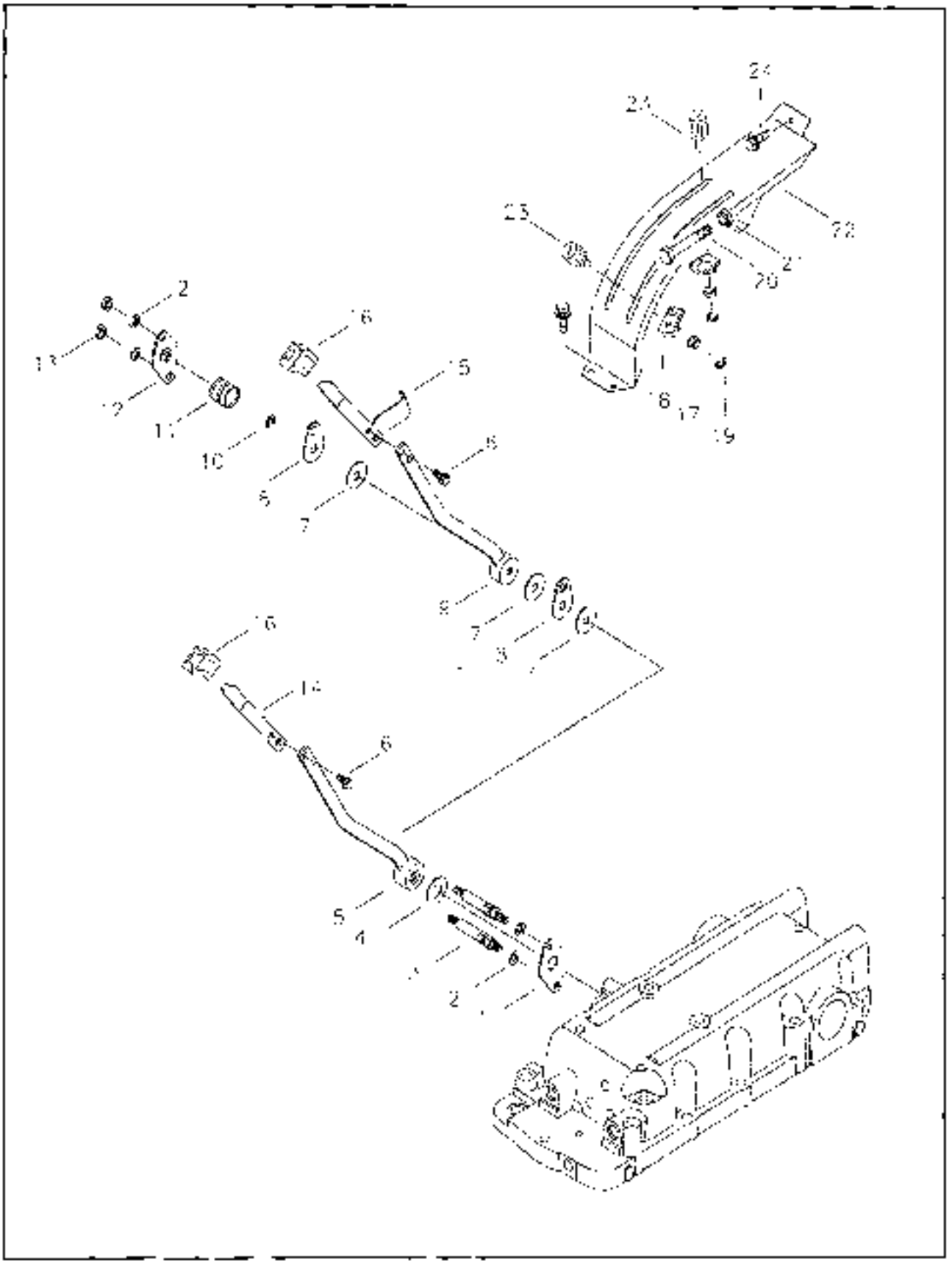

04-07-01 00

HYDRAULIC CONTROL LEVER

FIG. 9-7B **(DRAFT CONTROL)**

NO	PART NO.	PART NAME & DESCRIPTION		QTY A	QTY B	QTY C	APP NO	REM
1	40011954	COVER-TRG825		1	1	1		
2	40029549	WASHER-SPR S361100013	D10.2×2.5t	4	4	4		
3	40006495	SUPPORT-LEVER-TRG825		2	2	2		
4	40006943	FRICTION PLATE-L TRG825	D21×2t	1	1	1		
5	40011480	LEVER-DRAFT CTRL-TRG825		1	1	1		
6	40026971	BOLT-HEX W/WS S155092033	M6×1.25×20	4	4	4		
7	40006942	FRICTION PLATE-S-TRG825	D13×2t	3	3	3		
8	40012315	PLATE-LOCKING-TRG825		2	2	2		
9	40011648	LEVER-POSITION CTRL-TRG825		1	1	1		
10	40029259	RING SNAP-S610012001	D11.1×1.0t	1	1	1		
11	40012375	SPRING-TRG825		1	1	1		
12	40012314	COVER-SPRING-TRG825		1	1	1		
13	40028747	NUT-HEX 1 TY-S502100043	M10×1.25	2	2	2		
14	40011476	EXTENTION-O/CTRL/LEVER-TRG825		1	1	1		
15	40011596	EXTENTION POS/CTRL/LEVER-TRG825		1	1	1		
	40011479	EXTENTION-POS/CTRL/LEVER-TRG825		*	*	*		
16	40008375	KNOB-HYD LIFT LEVER-TRG970		2	2	2		
17	40028766	NUT-HEX 2 TY-S505060043	M8×1.25	4	4	4		
18	40008366	STOPPER HYD/LEVER TRG825		4	4	4		
19	40029314	RING-SNAP-S814006001	D6×0.8t	4	4	4		
20	40029495	BOLT-HEX FT-S165085043	M8×1.25×50	2	2	2		
21	40029040	NUT HEX SMALL S313080013	M8×1.25	2	2	2		
22	40011050	GUIDE-HYD/LEVER-TRG825		1	1	1		
23	40008400	GRIP-HYD/LEVER-TRG825		4	4	4		
24	40029004	BOLT-HEX W/WS-S159001633	M8×1.25×16	3	3	3		

HYDRAULIC CYLINDER

FIG. 9-8 G. 826

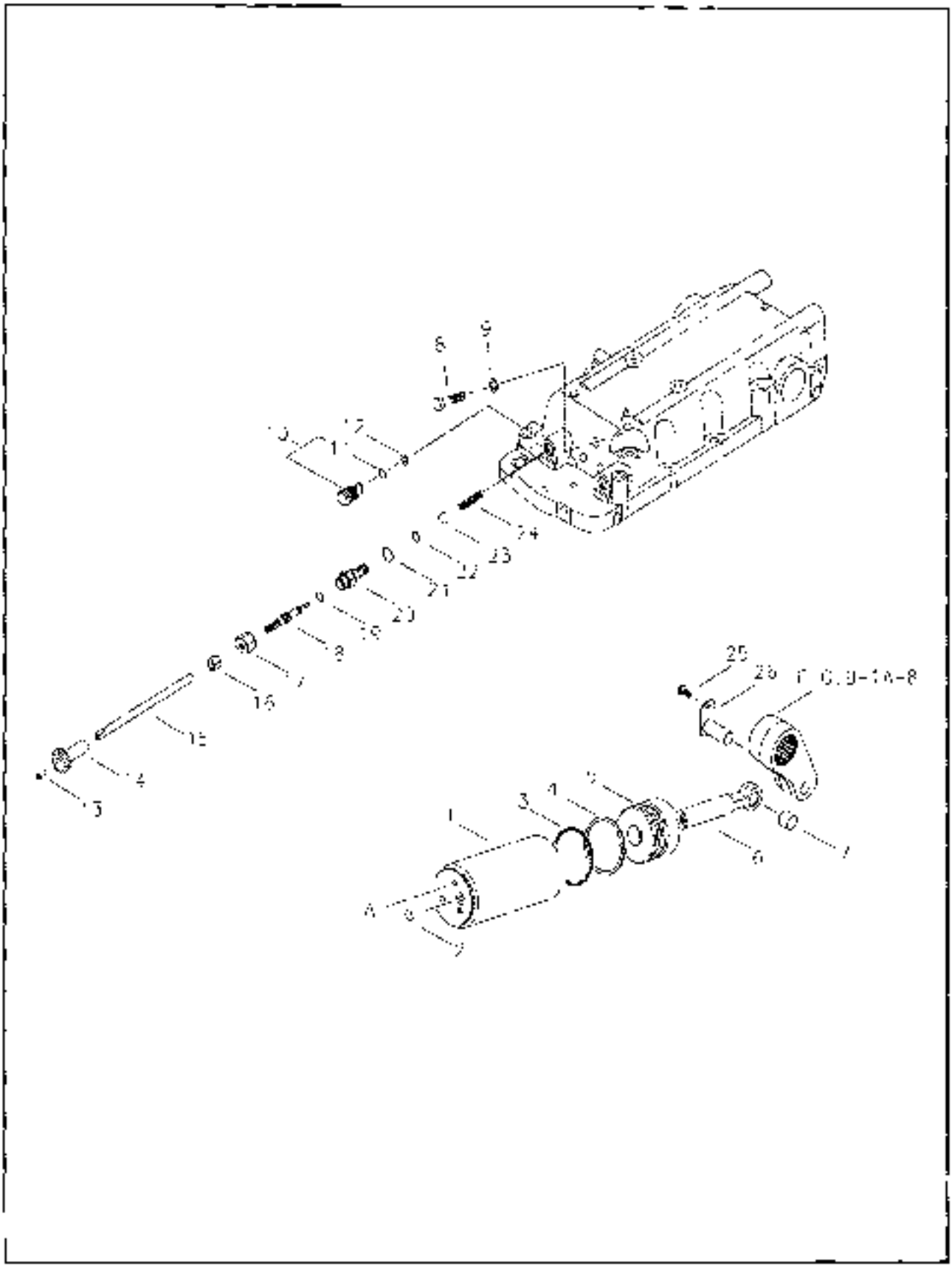

HYDRAULIC CYLINDER

FIG. 9-8

NO.	PART NO.	PART NAME & DESCRIPTION		QTY A	QTY B	QTY C	APP NO	REM
1	40011880	CYLINDER-HYDRAULIC-TRG826	Φ80	1	1	1		
2	40029207	O-RING-S801014020	Φ13.8×2.4	1	1	1		
3	40007433	O-RING-HYDPISTON-TRG826	Φ9.8×5.7	2	2	2		
4	40012134	RING-BACK UP-TRG826	Φ80×Φ70×3t	2	2	2		
5	40010320	PISTON-HYD-TRG826	Φ80	1	1	1		
6	40008663	ROD-HYDPISTON-TRG826		1	1	1		
7	40010006	BUSHING-TRG970	Φ22×Φ25×23	1	1	1		
8	40029469	BOLT-HEX-S103175043	M12×1.75×50	3	3	3		
9	40029551	WASHER-SPR-S3611200013	Φ12.2×3t	3	3	3		
10	40008161	VALVE ASSY-SAFETY-TRG826		1	1	1		
11	40029205	O-RING-S801018010	Φ17.8×2.4	1	1	1		
12	40012093	SEAL-PLUG-TRG826	Φ10.5×Φ18×16	1	1	1		
13	40028992	BOLT-HEX W/WS-S157051633	M5X0.8X16L	1	1	1		
14	40008980	KNOB-AIR CONTROL ROD-TRG970		1	1	1		
15	40008975	ROD-CONTROL-TRG826		1	1	1		
16	40029075	NUT-FLANGE-S345080013	M8×1.25	1	1	1		
17-22	40008146	VALVE ASSY-FREGULATOR-C826		1	1	1		
17	*	NUT-TRG926	M18×1.25	1	1	1		
18	*	SCREW-DSPEED ADJUST-TRG826		1	1	1		
19	*	O-RING-S801030020	Φ5.8×1.9	1	1	1		
20	*	BODY-REGULATOR VALVE-TRG826		1	1	1		
21	40029202	O-RING-S801014020	Φ13.8×2.4	1	1	1		
22	40029195	O-RING-S801013020	Φ9.8×1.9	1	1	1		
23	40010340	BALL STEEL-CV6000	3/8"	1	1	1		
24	40012356	SPRING-LOCKING VALVE-TRG826	Φ8.6×1.4	1	1	1		
25	40029919	BOLT-HEX W/WS-S153081633	M8×1.25×16	1	1	1		
26	40012524	PIN HYD-TRG826	Φ22	1	1	1		

REMOTE CONTROL VALVE & LINE

FIG. 9-9C **G. 827**

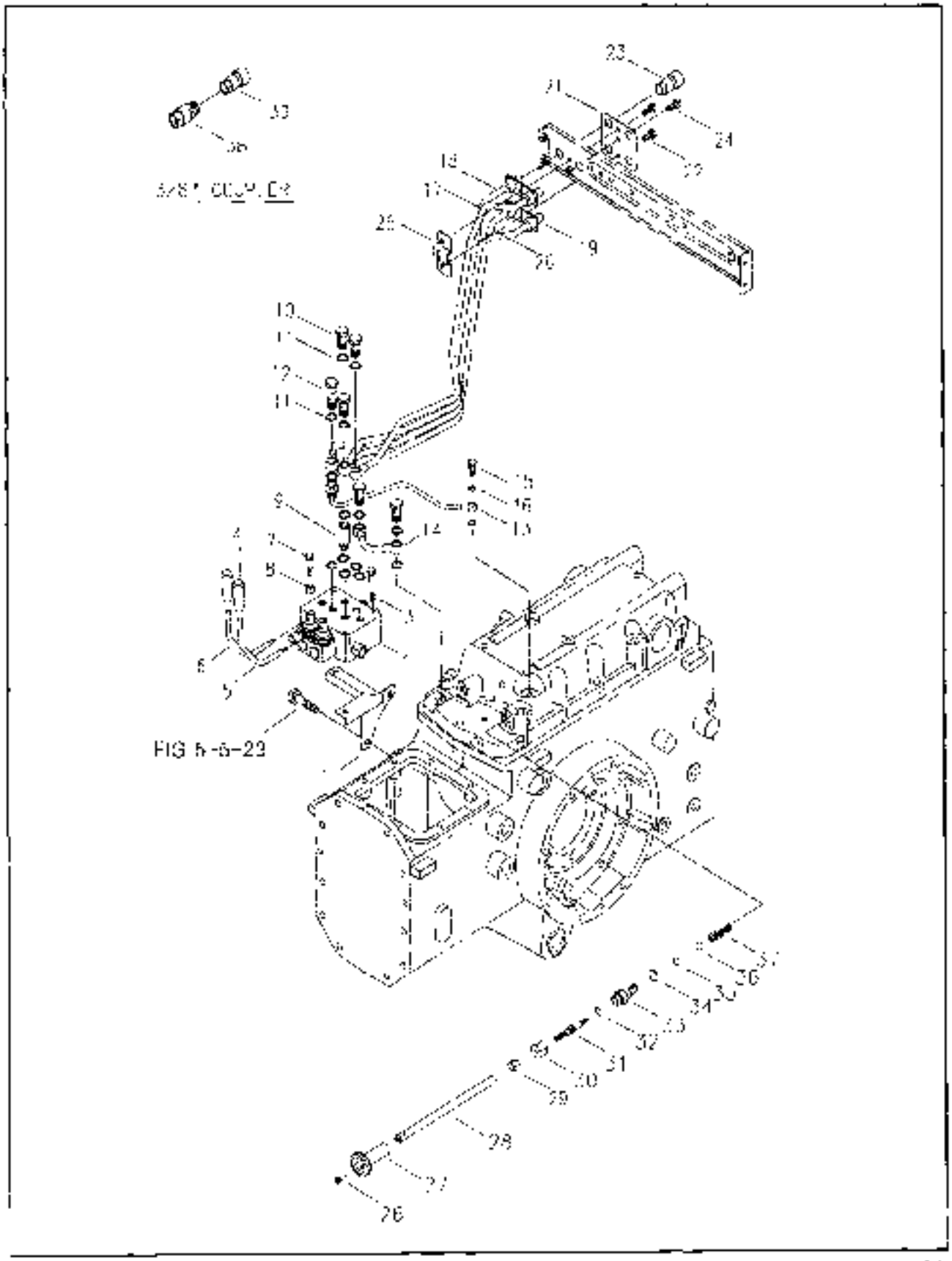

REMOTE CONTROL VALVE & LINE

FIG. 9-9C

NO	PART NO.	PART NAME & DESCRIPTION		QTY A	QTY B	QTY C	APP.NO	REM.
1	40011695	BRACKET-REMOCON VV-TRG827		1	1	1		
2	40007588	VALVE REMOCON-TRG827	SD5-2	1	1	1		W/ RELIEF
3	40028930	BOLT-HEX W/WS-S153086033	M8×1.25×60	3	3	3		
4	40008403	GRIP-AUX LEVER-TRG970		2	2	2		
5	40011765	LEVER-REMOCON VV(2)-TRG827		1	1	1		
6	40011764	LEVER-REMOCON VV(1)-TRG827		1	1	1		
7	40029362	BOLT HEX S101102543	M10×1.5×25	2	2	2		
8	40028769	NUT-HEX 2 TY-S305100013	M10×1.5	2	2	2		
9	40010251	CONNECTOR-UNION-TRG627	PF3/8	1	1	1		
10	40010321	BOLT-UNION-TRG630	PF3/8	4	4	4		
11	40012415	SEAL-BONDED-TRG823	Φ24×Φ16.8×11	15	15	15		
12	40009819	BOLT-UNION-TRG827	PF3/8	2	2	2		
13	40011770	PIPE REMOCON S/D TRG827		1	1	1		
14	40012411	PIPE-REMOCON DRAIN-TRG827		1	1	1		
15	40009919	BOLT UNION-TRG823	M12×1.75	1	1	1		
16	40012552	SEAL-COPPER-TRG823	Φ16×12.2×11	2	2	2		
17	40011091	PIPE-REMOCON(1/U)-TRG827	PT 1/2"	1	1	1		
18	40011093	PIPE-REMOCON(2/U)-TRG827	PT 1/2"	1	1	1		
19	40011092	PIPE REMOCON(1/D) TRG827	PT 1/2"	1	1	1		
20	40011094	PIPE-REMOCON(2/D)-TRG827	PT 1/2"	1	1	1		
21	40012501	BRACKET-REMOCON PIPE-TRG827		1	1	1		
22	40029006	BOLT-HEX W/WS-S159082033	M8×1.25×20	2	2	2		
23	40007922	COUPLER-QUICK-TRG827	PT1/2"	4	4	4		
24	40029004	BOLT-HEX W/WS S159081633	M8x1.25x15	1	1	1		
25	40012211	BRACKET-AUX/PIPE CLAMP-TRG827		1	1	1		
26	40028992	BOLT HEX W/WS S157051633	M6X1.0X16	1	1	1		
27	40008380	KNOB-F/R CONTROL ROD-TRG970		1	1	1		
28	40009975	ROD-CONTROL-TRG826		1	1	1		
29	40029075	NUT-FLANGE-S345080013	M8×1.25	1	1	1		
30-35	40006146	VALVE ASSY-F/REGULATOR-G826		1	1	1		
30	*	NUT-TRG826	M18×1.5	1	1	1		
31	*	SCREW O/SPEED ADJUST TRG826		1	1	1		
32	*	O-RING-S801036020	D5.8×1.9	1	1	1		
33	*	BODY-REGULATOR VALVE-TRG826		1	1	1		
34	40029202	O-RING S801014020	D13.8×2.4	1	1	1		
35	40029195	O-RING-S801010020	D9.8×1.9	1	1	1		
36	40010340	BALL-STEEL-CVG600	3/8" TAB10336	1	1	1		
37	40012336	SPRING-LOCKING VALVE-TRG826	C8.6×C1.4	1	1	1		
38	40009174	ADAPTOR-TRG827	PT3/8"	4	4	4		
39	40007983	COUPLER-QUICK-TRG827	PT3/8"	4	4	4		

UPPER LINK BRACKET

FIG. 9-10A G. 828

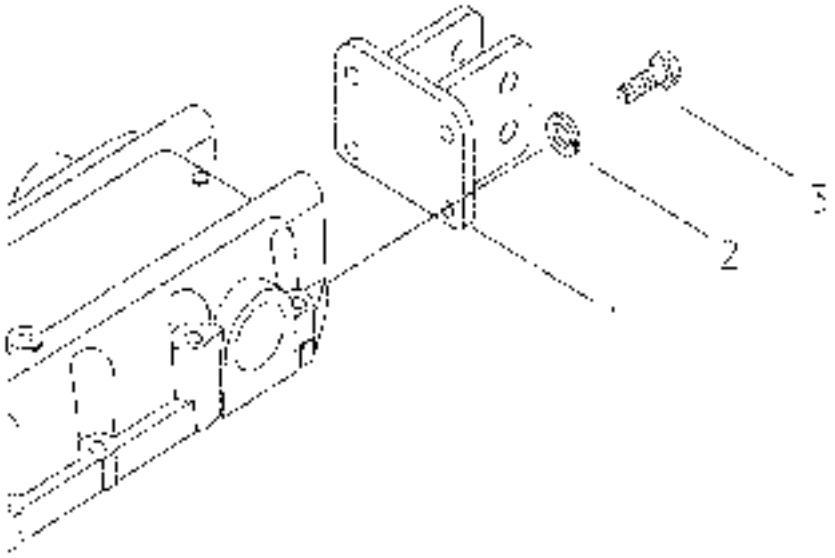

04-07-01 00

UPPER LINK BRACKET

FIG. 9-10A

NO	PART NO.	PART NAME & DESCRIPTION		QTY A	QTY B	QTY C	APP.NO	REM.
1	40011786	BRACKET-TOP LINK-TRG828		1	1	1		
2	40029553	WASHER SPR-S351143015	φ24.5×φ14.2×3.5t	4	4	4		
3	40029395	BOLT-HEX-S101143543	M14×2.0×35L	4	4	4		

UPPER LINK BRACKET

FIG. 9-10B G. 828

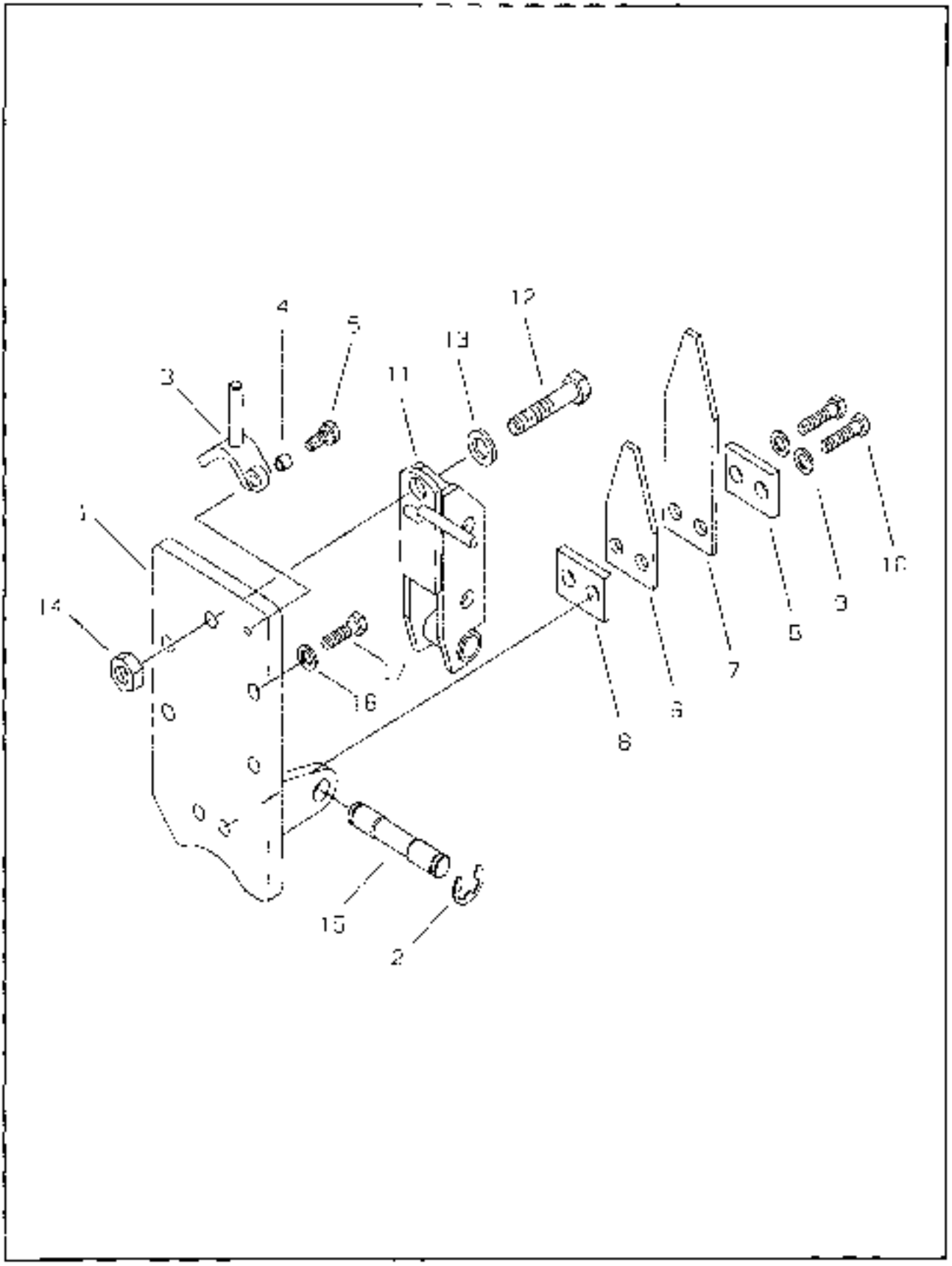

06-04-01 01

UPPER LINK BRACKET

FIG. 9-10B (DRAFT CONTROL)

NO	PART NO	PART NAME & DESCRIPTION		QTY A	QTY B	QTY C	APP.NO	REV
1-15	40008019	BRACKET ASSY UPPER LINK G828		1	1	1		
1	40011393	BRACKET-TRG828		1	1	1		
2	40025372	RING-SNAP-S814016003		2	2	2		
3	40012543	STOPPER TRG828		1	1	1		
4	40012072	COLLAR-RATCHET-TRG828		1	1	1		
5	40028973	BOLT-HEX WWG S956002503	M8×1.0×25	1	1	1		
6	40012518	SPRING-LEAF-TRG828		1	1	1		
7	40012336	SPRING-LEAF-TRG828			1	1		
8	40011327	PLATE-TRG828		2	2	2		
9	40029553	WASHER-SPR-S361140013		2	2	2		
10	40028886	BOLT-HEX-S107144045	M14×1.5×45	2	2	2		
11	40011576	BRACKET-TOP LINK-TRG828		1	1	1		
12	40029482	BOLT-HEX-S103167040	M16×1.5×70	1	1	1		
13	40028179	WASHER-PLN-S364160053	D16		1	1		
14	40029052	NUT-HEX SMALL-S314160013	M16×1.5	1	1	1		
15	40009998	PIN-TRG828	D20	1	1	1		
16	40029553	WASHER-SPR-S361140013		4	4	4		
17	40029396	BOLT-HEX-S101143043	M14×2.0×35	4	4	4		

DRAWBAR HITCH

FIG. 9-11B

G. 891

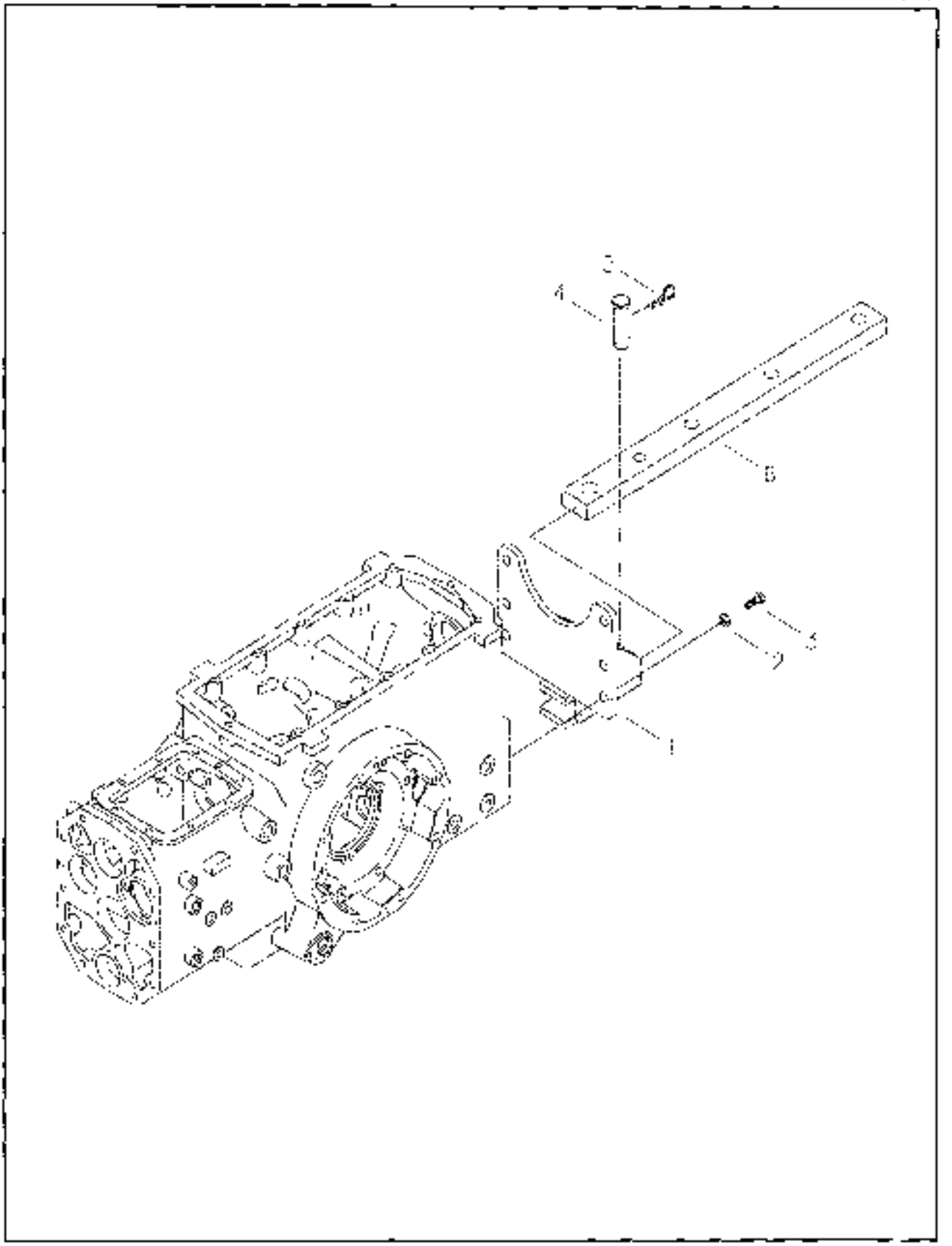

06-04-01

01

DRAWBAR HITCH

FIG. 9-11B **(TELESCOPIC DRAWBAR)**

NO	PART NO.	PART NAME & DESCRIPTION		QTY A	QTY B	QTY C	APP NO	REM
1	40011054	SUPPORT-HITCH-TRG891		1	1	1		
2	40029553	WASHER-SPR-S3611400[illegible]3	◇14.2×0/24.5×3.5[illegible]	6	6	6		
3	40020397	BOLT-HEX-S[illegible]144043	M14×2×40[illegible]	6	6	6		
4	40009476	PIN-DRAWBAR R/PIVOT-TRG891	◇21×77	1	1	1		
5	40011979	PIN-SNAP-TRG896	◇28	1	1	1		
6	40008966	DRAWBAR HITCH-TRG891		1	1	1		

06-04-01 01

UPPER & LOWER LINK

FIG. 9-12 G. 896

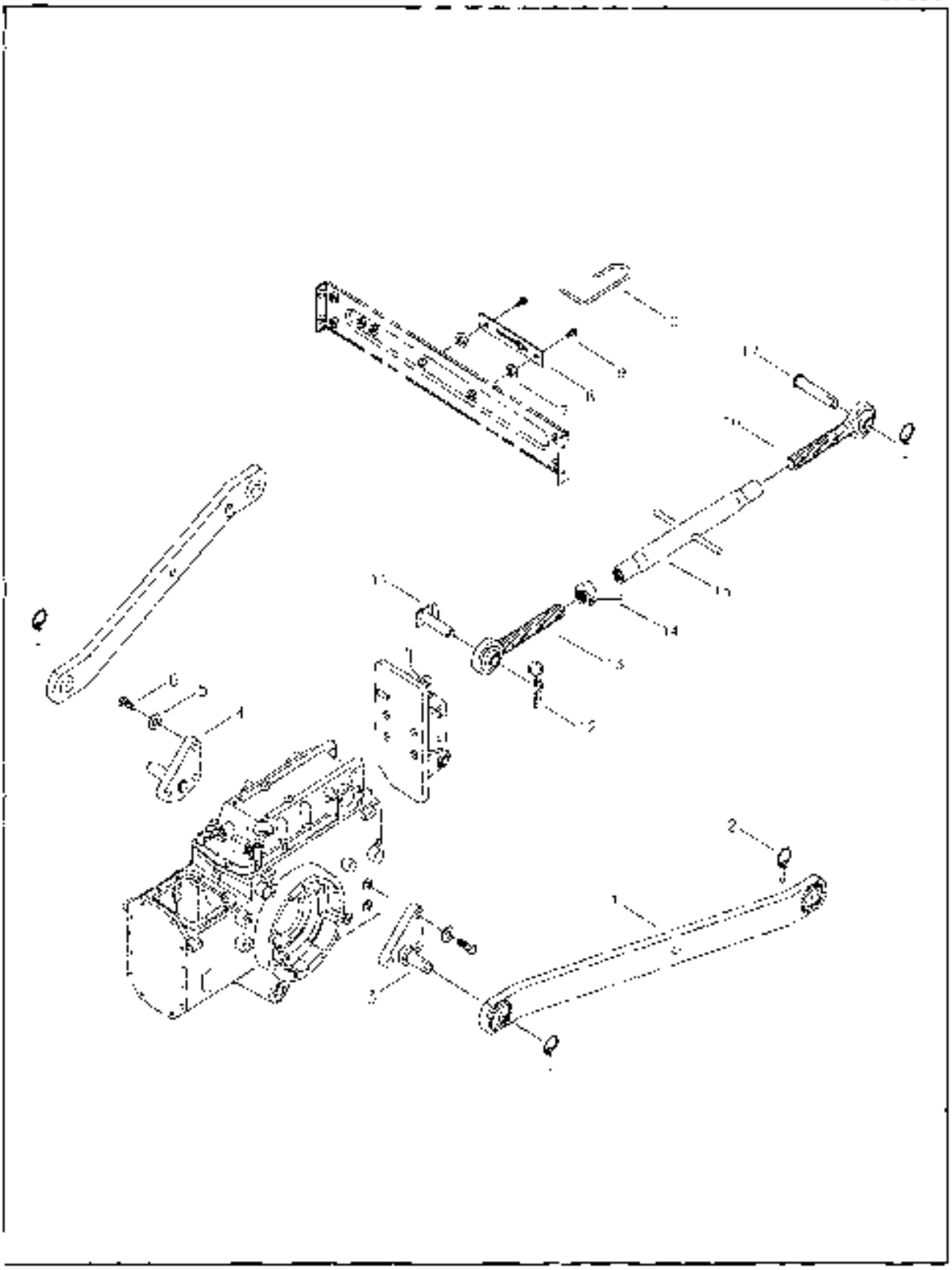

04 07 01 00

UPPER & LOWER LINK

FIG. 9-12

NO.	PART NO	PART NAME & DESCRIPTION		QTY A	QTY B	QTY C	APP NO	REM.
1	40008100	LINK ASSY-LOWER-G896		2	*	2		
	40008019	LINK ASSY-LOWER-G896		*	2	*		
2	40012410	PIN-LINK-TRG896		5	5	5		
3	40010327	PIN-LOWER LINK-TRG896	D22	1	1	1		
4	40012531	PIN-LOWER LINK-TRG896	D22	1	1	1		
5	40029553	WASHER-SPR-S36#140013	D24.5xD14.2x3.5	6	6	6		
6	40009534	BOLT-HEX-TRG896	M14×2×40	6	6	6		
7	40012256	SPACER-GRILLE-TRG830		2	2	2		
8	40011811	BRACKET-HOOK-TRG896		1	1	1		
9	40029604	BOLT-HEX WAWS-S159C61535	M8×1.25×16	2	2	2		
10	40012373	HOOK-TOP LINK TRG896		1	1	1		
11	40012529	PIN-TOP LINK FRONT-TRG896	D19	1	1	1		
12	40011979	PIN-SNAP-TRG896	D19	1	1	1		
13~16	40008165	LINK ASSY-LIFFER-G896	470-750	1	1	1		
13	40010513	BOLT-EYE(LH)-TRG896	M24×3	1	1	1		
14	40012541	NUT-TRG970	M24×3	1	1	1		
15	40011742	TURN BUCKLE-HYDLINK-TRG896	M24×3	1	1	1		
16	40010519	BOLT-EYE(RH)-TRG896	M24×3(CAT1)	1	1	1		
17	40010207	PIN-UPPER LINK-TRG896	D19	1	1	1		

LIFT ROD

FIG. 9-13B G. 896

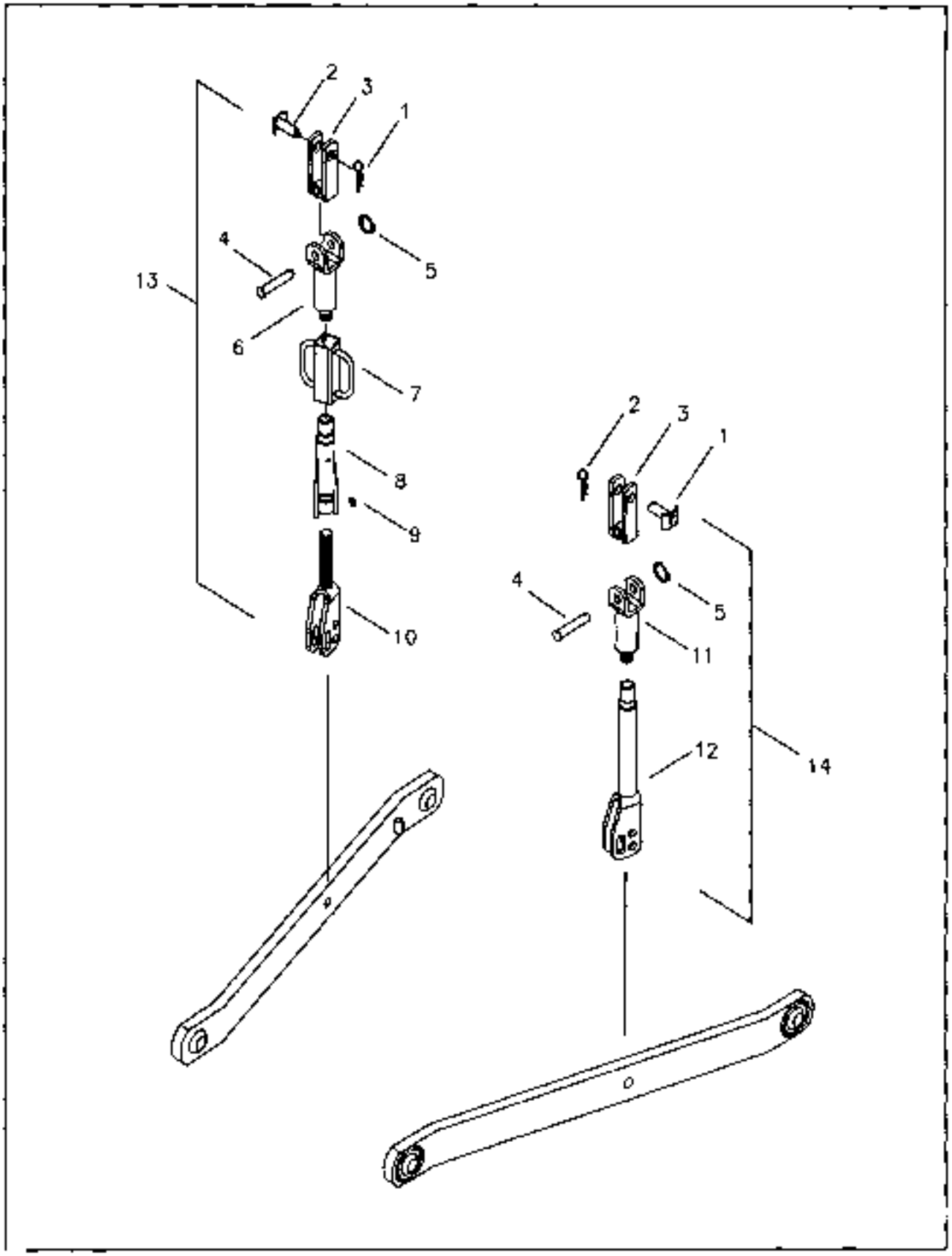

06-04-01 04

FIG. 9-13B

NO.	PART NO	PART NAME & DESCRIPTION		QTY A	QTY B	QTY C	APP NO	REM
1	40012264	PIN-LIFT ROD UPPER-TRG898	ø19	2		2		
2	40011970	PIN-SNAP-TRG896		2		2		
3	40012448	JOINT-LIFT ROD-TRG898		2		2		
4	40006470	PIN-LIFT ROD-TRG856	ø15	2		2		
5	40029262	RING-SNAP-SB10216000		2		2		
6	40012200	ROD UPPER LIFT-TRG898		1		1		
7	40012202	HANDLE-LIFT ROD-TRG896		1		1		
8	40012453	SLEEVE-LIFT ROD-TRG898		1		1		
9	40012702	NIPPLE-A07301109	PT1/8	1		1		
10	40012201	ROD-LOWR LIFT-TRG896		1		1		
11	40012208	ROD-UPPER LIFT-TRG896		1		1		
12	40011420	ROD-LOWR LIFT TRG896		1		1		
13	40008022	ROD ASSY-LIFT(RH)-G896		1		1		
14	40008003	ROD ASSY LIFT(LH)-G896		1		1		

CHECK LINK

FIG. 9-14 G. 898

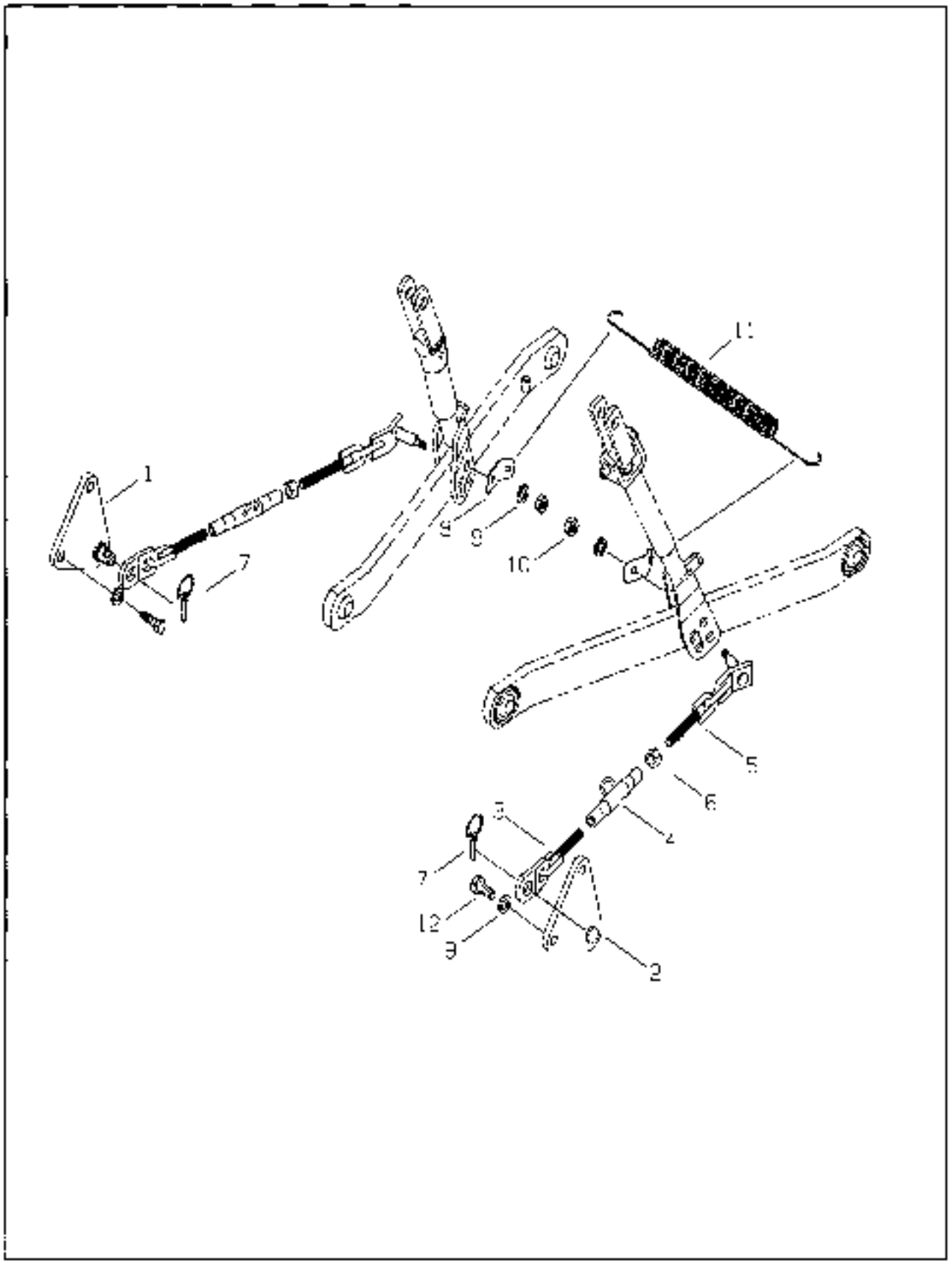

CHECK LINK

FIG. 9-14

NO.	PART NO.	PART NAME & DESCRIPTION		QTY A	QTY B	QTY C	APP. NO	REM
1	40011694	BRACKET-CHECK CHAIN-TRG896		1	1	1		
2	40011695	BRACKET-CHECK CHAIN-TRG896		1	1	1		
3~6	40008020	LINK ASSY CHECK CHAIN-G822		2	2	2	05:8 7 8	
3	40011424	CHAIN-FRONT-TRG896		2	2	2		
4	40011425	BUCKLE-TURN TRG896		2	2	2		
5	40011596	CHAIN-REAR-TRG896		2	2	2		
6	40028728	NUT-HEX 1 TY S201160013	M 8×2.0 [illegible]	2	2	2		
7	40012410	PIN-LINK-TRG895		2	2	2		
8	40012505	BRACKET-SPRING-TRG896		2	2	2		
9	40029553	WASHER SPR-S361140013	Φ24.5×Φ14.2×3.5t	6	6	5		
10	40029031	NUT-HEX SMALL S314140013	M14×1.25	2	2	2		
11	40011513	SPRING-LOWER LINK-TRG896		1	1	1		
12	40029385	BOLT HEX-S101143543	M14×5.0×35	4	4	4		

HYDRAULIC LINE & VAVLE

FIG. 9-15

G. 829

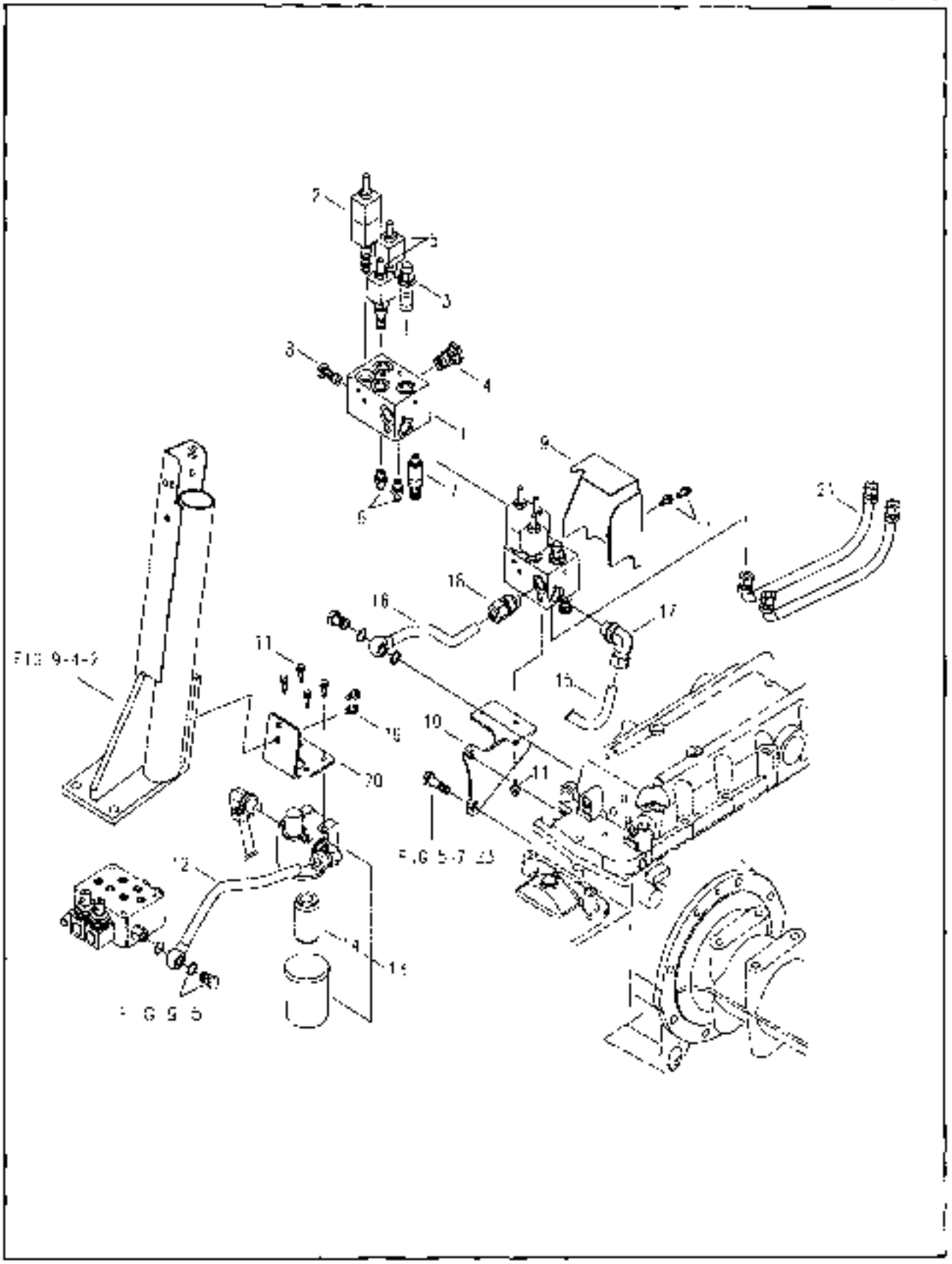

HYDRAULIC LINE & VAVLE

FIG. 9-15 (AUTO/L)

NO.	PART NO.	PART NAME & DESCRIPTION		QTY A	QTY B	QTY C	APP.NO	REV.
1~6	40156893	VALVE ASSY-LEVELING-TRG829		1	1	1		
1	40156827	BODY LEVELING VALE TRG829		1	1	1		
2	40036323	VALVE MAIN SOL TRG829		1	1	1		
3	40036322	VALVE-LOGIC-TRG829		1	1	1		
4	40036323	VALVE-CHECK-TRG829		1	1	1		
5	40036321	VALVE-SOLPOPPET-TRG829		2	2	2		
6	40036342	UNION TRG856	PF1/4	2	2	2		
7	40156861	VALVE-STOP TRG825		1	1	1		
8	40156850	VALVE-CHECK-A1829046		1	1	1		
9	40067306	COVER-LEVELING VV-TRG829		1	1	1		
10	40067309	BRACKET-VALVE-TRG829		1	1	-		
11	40026971	BOLT-HEX W/WS-S155082033	M8×1.25×20	8	8	8		
12,17	40151580	PIPE A1CMS903		1	1	-		
12	40156864	PIPE-FILTER INLET-TRG823		1	1	-		
13	40154301	OIL FILTER ASSY-IN-LINE-G823		1	1	1		
14	40156841	ELEMENT-A1829358	20μ	1	1	1		
15,17	40151583	PIPE-A1CMS904		1	1	1		
15	40154741	PIPE-LEVELING INLET-TRG823		1	1	1		
16,18	40151585	PIPE-A1CMS905		1	1	1		
16	40154742	PIPE-LEVELING DRAIN-TRG825		1	1	1		
17	40013275	JOINT ELBOW-TRG823	BOLM15-04G	5	3	3		
18	40008907	JOINT-TRG823	BOM15-04G	1	1	1		
19	40026947	BOLT-HEX W/WS-S154102033	M12×1.25×20	2	2	2		
20	40067310	BRACKET IN-LINE FILTER TRG829		1	1	1		
21	40036319	HOSE-TRG829		2	2	2		

HOOD

FIG. 10-1F G. 830

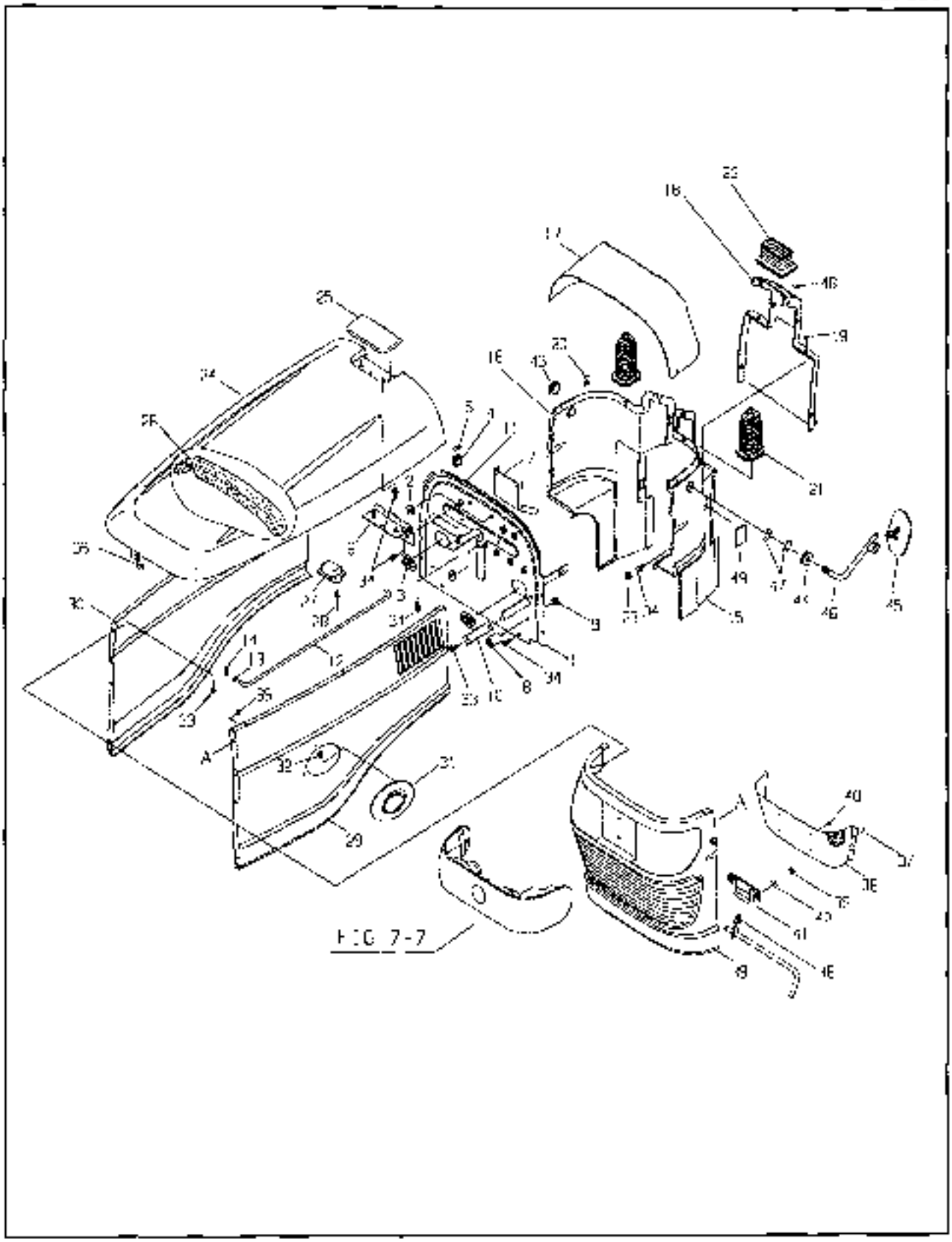

09-05-01 00

FIG. 10-1F

NO	PART NO.	PART NAME & DESCRIPTION		QTY A	QTY B	QTY C	APP NO	REM
1	40010929	PLATE-HEAT ISOLATION-TRG930		1	*	1		
2	40012982	GROMMET-A0720034		2	*	2		
3	40007428	GROMMET-LOW EDGE-TRG970		2	*	2		
4	40012721	SPRING-A0630215		1	*	1		
5	40012213	BRACKET-SPRING-RPX000		1	*	1		
6	40012535	HINGE-TRG830		1	*	1		
7	40011756	BRACKET-HINGE-TRG830		1	*	1		
8	40007451	STOPPER RUBBER-TRG830		2	*	2		
9	40029075	NUT-FLANGE-S345080013	M6x1.25	2	*	2		
10	40012258	COVER TRG830		1	*	1		
11	40007542	WEATHER STRIP-BYPASS-TRG970		1	*	1		
12	40012256	ROD UPPER COVER TRG830		1	*	1		
13	40028157	WASHER-PIN-S363080013	D15.5/9.4x1.6T	1	*	1		
14	40029131	PIN-SNAP-S443080013	D3x27.7	1	*	1		
15	40008221	PANEL-BODY(LH)-TRG830		1	*	1		
16	40008222	PANEL-BODY(RH)-TRG830		1	*	1		
17	40009278	PANEL-BODY UPPER-TRG830		1	*	1		
18	40009220	PANEL-REAR BODY-TRG930		1	*	1		
19	40009549	SCREW-TAPPING-TRG830		12	*	12		
20	40012278	PLATE-LOCK-TRG970		12	*	12		
21	40007296	COVER LEVER DUST-TRG830		2	*	2		
22	40007289	COVER-STEERING-TRG830		1	*	1		
23	40008371	CAP-BOLT-TRG830		4	*	4		
24	40213839	HOOD-SBG830	S-BLUE	1	*	1		
25	40008308	COVER HINGE-TRG830		1	*	1		
26	40006046	SEAL-RADIATOR-TRG830		1	*	1		
27	40008402	STOPPER-HOOD SUPPORT-TRG830		1	*	1		
28	40029187	RIVET-BLIND-S466321010	D3.2x10L	2	*	2		
29	40223408	COVER-SIDE-LH-SBG830	S-BLUE	1	*	1		
30	40223411	COVER-SIDE-RH-SBG830	S-BLUE	1	*	1		
31	40011629	COVER-EXHAUST-TRG830		1	*	1		
32	40029072	NUT FLANGE-S345050013	M5x0.8	3	*	3		
33	40029386	BOLT-HEX WASH-S199061633	M6x1.0x16L	8	*	8		
34	40029306	BOLT-HEX WASH-S199082033	M8x1.25x20L	11	*	11		
35	40029073	NUT FLANGE-S345060013	M6x1.0	9	*	9		
36	40007457	BAND-RUBBER-TRG970		1	*	1		
37~45	40223410	GRILLE ASSY-GBG	S-BLUE	1	*	1		
37	40012729	NUT SPEED-A0780137		6	*	6		
38	40010910	NET-GRILLE-TRG830		1	*	1		
39	40223407	GRILLE-SBG830	S-BLUE	1	*	1		
40	40029022	SCREW-TPGRS-S234401813	4X16	4	*	4		
41	40012254	HANGER-TRG830		1	*	1		
42	40029567	WASHER-PIN-S363080013	D11.5/6.4X1.6T	2	*	2		
43	40007458	CAP-RUBBER-TRG970		1	*	1		

FIG. 10-2E

G. 840

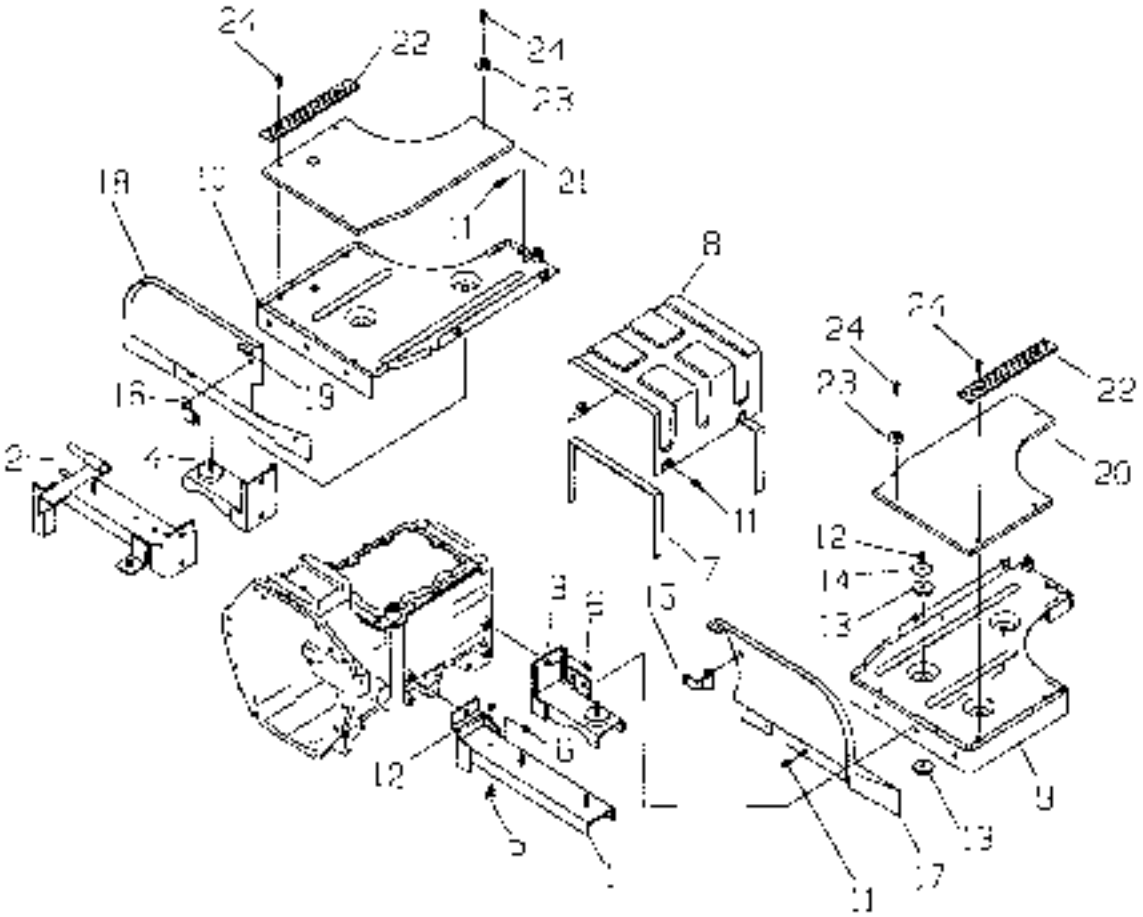

FIG. 10-2E

NO	PART NO.	PART NAME & DESCRIPTION		QTY A	QTY B	QTY C	APP NO	REM.
1	40011225	BRACKET-STEP FRONT(LH)-TRG840		1	*	1		
2	40011265	BRACKET-STEP FRONT(RH)-TRG840		1	*	1		
3	40011757	BRACKET-STEP REAR(LH)-TRG840		1	*	1		
4	40011833	BRACKET-STEP REAR(RH)-TRG840		1	*	1		
5	40007478	RUBBER-RUBBER-CBG000		3	*	3		
6	40028947	BOLT-HEX WWS-S154102033	M10x1.25x20L	8	*	8		
7	40006931	SPONGE-TRG840		2	*	2		
8	40223412	COVER-T/M CASESBG840	S-BLUE	1	*	1		
9	40223403	STEP-LHSBG840	S-BLUE	1	*	1		
10	40223401	STEP-RHSBG840	S-BLUE	1	*	1		
11	40029006	BOLT-HEX WWS-S159082033	M8x1.25x20L	12	*	12		
12	40029375	NUT-FLANGE-S345080313	M8x1.25	8	*	8		
13	40007415	RUBBER-CUSHION-TRG840		10	*	10		
14	40012109	WASHER-STEP-TRG840		5	*	5		
15	40012585	BRACKET-COVER(LH)-TRG840		1	*	1		
16	40012763	BRACKET-COVER(RH)-TRG840		1	*	1		
17	40223406	COVER-LHSBG840	S-BLUE	1	*	1		
18	40223408	COVER-RHSBG840	S-BLUE	1	*	1		
19	40007334	WEATHER STRIP-LATRG970		2	*	2		
20	40006951	MAT-STEP(LH)-TRG840		1	*	1		
21	40006950	MAT-STEP(RH)-TRG840		1	*	1		
22	40011710	BRACKET-MAT-TRG840		2	*	2		
23	40012282	WASHER-MAT-TRG840		4	*	4		
24	40028874	SCREW-CROSS CSNK-S220812511	M8x1.25x25L	8	*	8		

SEAT

FIG. 10-4B

G. 850

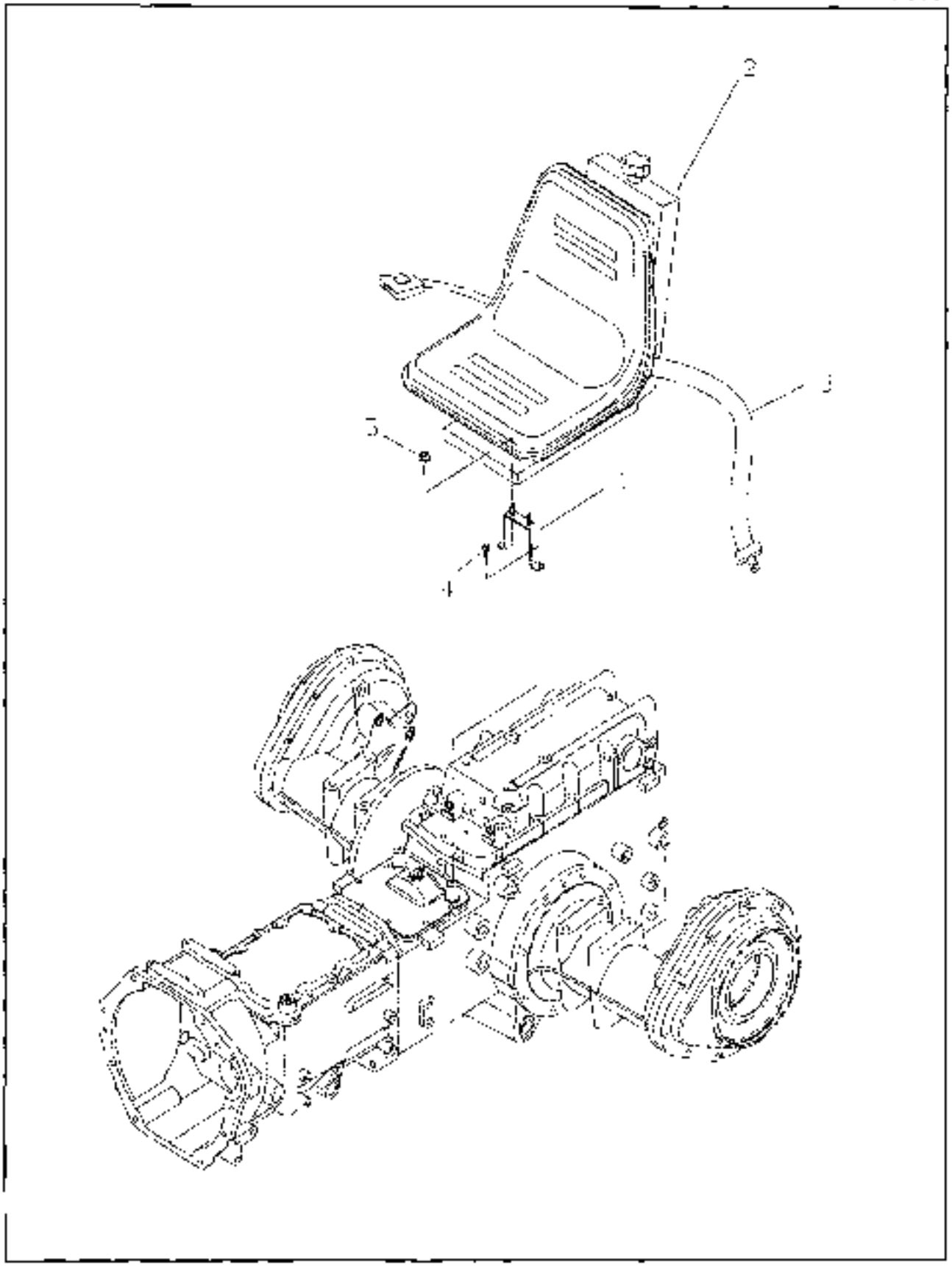

FIG. 10-4B

NO.	PART NO.	PART NAME & DESCRIPTION		QTY A	QTY B	QTY C	APP NO	REM
1	40011775	BRACKET-SEAT-TRG850		1	1	1		
2-3	40007722	SEAT+BELT ASSY-TRG850		-	1	1		
2	-	SEAT ASSY-TRG850		1	1	1		
3	40007675	SEAT BELT ASSY-TRG850		1	1	1		
4	40028963	BOLT-HEX W/WS S158-02533	M10x1.25x25L	2	2	2		
5	40029070	NUT-FLANGE-S346100013	M10x1.25	4	4	4		

FENDER

FIG. 10-14F G. 870

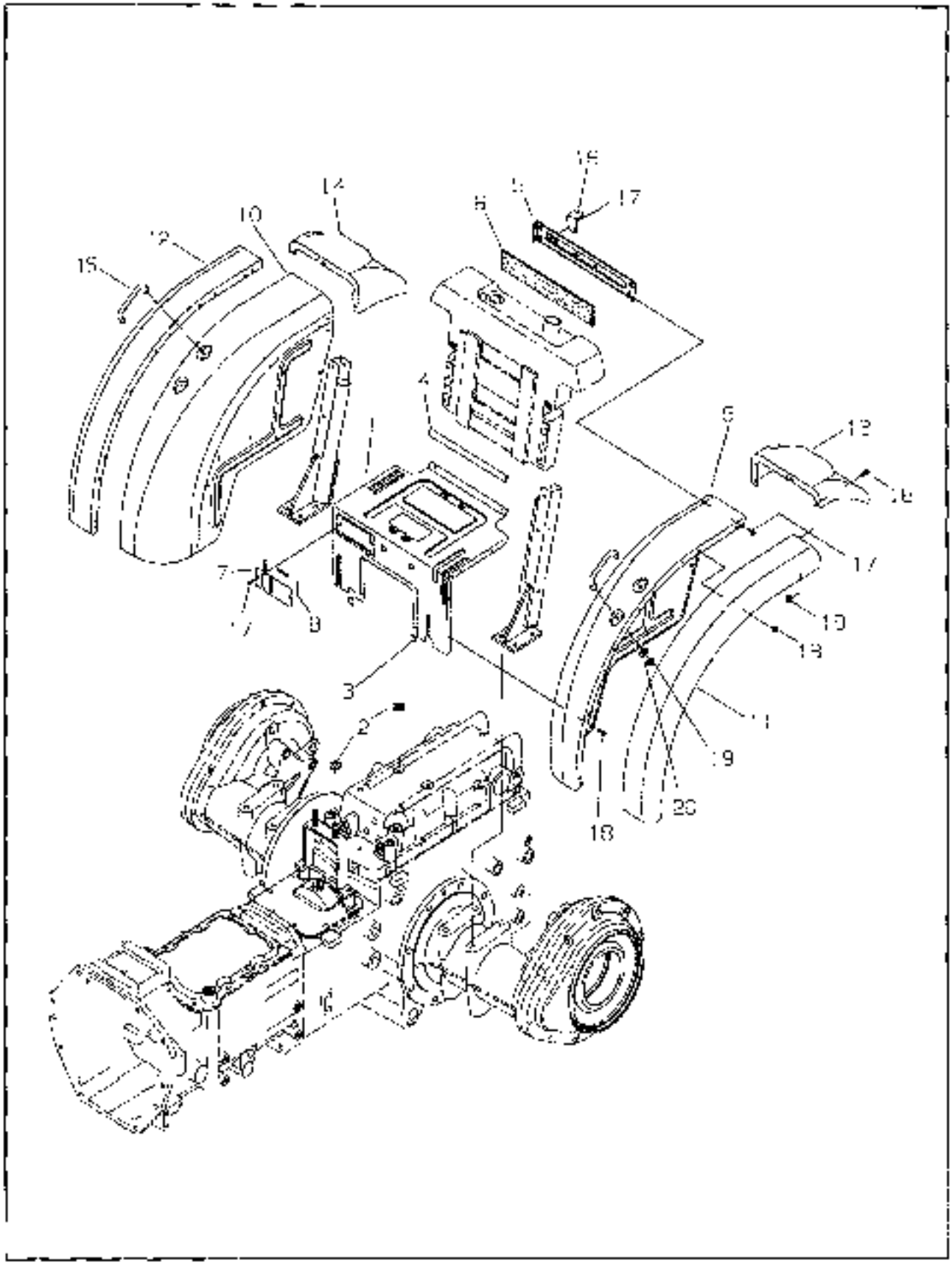

09-05-01 00

FIG. 10-14F

NO.	PART NO.	PART NAME & DESCRIPTION		QTY A	QTY B	QTY C	APP.NO.	REM.
1	40223404	COVER-CENTERSBG870	S-BLUE	1	1	1		
2	40007415	RUBBER-CUSHION-TRG840		4	1	4		
3	40006893	SPONGE-TRG870		2	1	2		
4	40007336	WEATHER STRIP-DUST-TRG870		1	1	1		
5	40011720	COVER-REAR-TRG870		1	1	1		
6	40006940	SPONGE-TRG870		1	1	1		
7	40223402	COVER ASSY-STOPPER-G870	S-BLUE	1	1	1		
8	40006872	SPONGE-TRG870		4	1	4		
9	40223413	FENDER-LHSBG870	S-BLUE	1	1	1		
10	40223414	FENDER RHSBG870	S-BLUE	1	1	1		
11	40008256	GUARD-MUD(LH)-TRG870		1	1	1		
12	40008257	GUARD-MUD(RH)-TRG870		1	1	1		
13	40008258	GUARD-MUD REAR(LH)-TRG870		1	1	1		
14	40008259	GUARD-MUD REAR(RH)-TRG870		1	1	1		
15	40008327	HANDLE RAIL-TRG870		2	1	2		
16	40012273	BRACKET-WORKING LIGHT-TRG870		1	1	1		
17	40029004	BOLT-HEX W/WS-S159081633	M8x1.25x16L	6	1	6		
18	40029006	BOLT-HEX W/WS-S159082033	M8x1.25x20L	32	1	32		
19	40020075	NUT-FLANGE-S345020013	M8x1.25	6	1	6		
20	40028196	WASHER-PLN-S363082613	D28/8.4x2.5T	4	1	4		

FIG. 10-15C

G. 880

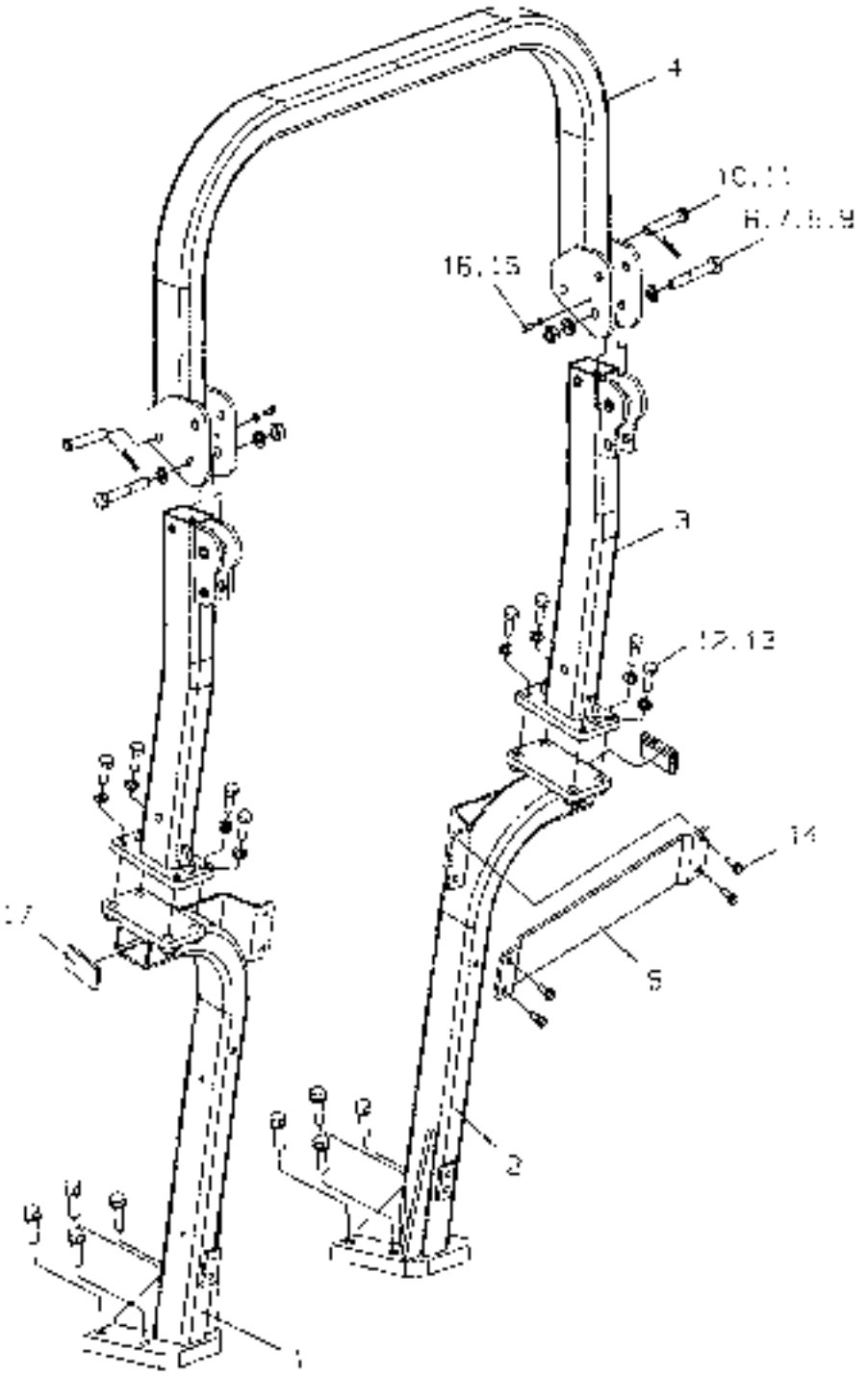

04-05-01

DG

FIG. 10-15C

(R/ROPS)

NO	PART NO.	PART NAME & DESCRIPTION		QTY A	QTY B	QTY C	APP NO	REM.
1-17	*	ROPS ASSY REAR G880		1	1	1		
1	40011685	PILLAR-R/ROPS LOW(LH)-TRG880		1	1	1		
2	40011686	PILLAR-R/ROPS LOW(RH)-TRG880		1	1	1		
3	40011411	PILLAR-REAR ROPS MID-TRG880		2	2	2		
4	40011687	BEAM REAR ROPS UPPER-TRG880		1	1	1		
5	40012447	PLATE-CONNECTOR-TRG880		1	1	1		
6	40029457	BOLT-HEX S1D1145042	M14X2.0X90L	2	2	2		
7	40028727	NUT-HEX 1 TY-S301140043	M14X2.0	2	2	2		
8	40025553	WASHER-SPR-S361140013	D24.5Xd14.2X3.5t	2	2	2		
9	40025160	WASHER-PLN-S363140012	D24Xd15X2.5t	2	2	2		
10	40029111	PIN HEAD S427140023	Φ14X80L	2	2	2		
11	40029134	PIN-SNAP-S443140013	Φ14X48.6L	2	2	2		
12	40028874	BOLT-HEX-S105124553	M12X1.75X45L	8	8	8		
13	40029551	WASHER-SPR S361120013	D21.5Xd13.2X3t	8	8	8		
14	40029008	BOLT-HEX W/WS-S159082533	M8X1.25X25L	4	4	4		
15	40029491	BOLT-HEX FT-S159060043	M6X1.0X20L	2	2	2		
16	40028719	NUT HEX 1 TY-S301060043	M6X1.0	2	2	2		
17	40007438	COVER-RUBBER-TRG880		2	2	2		

CHASSIS (C3030/C3040)

PART NO.	FIG. NO.	Key No	PART NO	PART NO	FIG. NO	Key No	PART NO.	PART NO.	FIG. NO	Key No	PART NO.
20020325	10-1F	37–44	A1850522	40006908	9-5E	3	3A1823010	40007081	8-3B	16	A1750171
20020341	8-3B	16	A1750173	40006908	9-5F	3	3A1823010	40007084	8-3A	11–14	A1750124
20020341	8-3C	16	A1750173	40006913	6-4A	4	A1630547	40007084	8-3B	11–14	A1750124
20020342	8-3A	16	A1730144	40006913	6-4B	4	A1630547	40007084	8-3C	11–14	A1750124
20020342	8-3C	16	A1730144	40006913	6-4C	4	A1630547	40007089	8-1B	3	A1730111
20020343	8-3B	3	A5001132	40006930	2-1A	5	A1040089	40007090	8-1C	3	A1730111
20020343	8-3C	3	A5001132	40006930	2-1B	5	A1040089	40007091	8-1B	6	A1730170
20020403	3-4A	1	A1250109	40006930	2-1C	5	A1040089	40007091	8-1C	6	A1730170
20020403	3-4B	1	A1250109	40006931	2-1A	7	A1040093	40007096	8-3A	5	Q1800017
20020403	3-4C	1	A1250109	40006931	2-1B	7	A1040093	40007096	8-3B	5	Q1800017
20020406	3-4B	18	A1200128	40006931	2-1C	7	A1040093	40007096	8-3C	5	Q1800017
20020421	5-5	11–21	A1480068	40006936	2-1A	8	A1040133	40007097	8-2	3	A1740002
20020422	5-5	25	A1480068	40006936	2-1B	8	A1040133	40007100	8-1A	4	A1730135
20021270	5-1	2	A1440287	40006936	2-1C	8	A1040133	40007100	8-1D	4	A1730135
20021323	9-4C	11	A1780057	40006939	2-1A	6	A1040090	40007106	8-1A	3	A1730063
20021957	3-4A	18	A1280171	40006939	2-1B	6	A1040090	40007106	8-1D	3	A1730063
20021957	3-4C	18	A1280171	40006939	2-1C	6	A1040090	40007119	8-3A	3	A1750150
20021961	1-2	1–17	A1324109	40006940	10-14A	6	A1870233	40007123	8-4C	5	A1760061
20021968	10-2A	9	A1840214	40006940	10-14B	6	A1870233	40007125	8-4C	18	A1750063
20021969	10-2A	10	A1840215	40006940	10-14C	6	A1870233	40007130	8-1C	11	A1760060
40006709	2-7A	5	A1215020	40006940	10-14D	6	A1870233	40007142	8-1D	1	A1730199
40006709	2-7B	5	A1215020	40006940	10-14F	5	A1870233	40007143	8-1C	12	A1730220
40006713	2-7A	12	A1215030	40006941	9-4	6	A1151101	40007152	8-3B	19	A1750174
40006713	2-7B	12	A1215030	40006942	9-7A	7	A1825024	40007152	8-3C	19	A1750174
40006720	10-15A	5	A1880069	40006942	9-7B	7	A1825024	40007155	8-2	8	A1740030
40006737	2-1A	1–12	A1040165	40006943	9-7B	4	A1825023	40007158	8-2	5	A1740030
40006737	2-1C	1–12	A1040165	40006948	10-1A	25	A1830280	40007165	8-1A	5	A1730146
40006746	2-1B	1–12	A1040165	40006948	10-1B	25	A1830289	40007165	8-1D	5	A1730146
40006749	10-15D	17–23	A1880064	40006948	10-1D	25	A1830289	40007165	8-1C	1	A1730152
40006767	10-16A	2–14	A1880017	40006948	10-1C	25	A1830289	40007169	8-1B	5	A1730172
40006771	10-14B	7	A1870199	40006951	2-5	9	A1170128	40007169	8-1C	5	A1730173
40006773	2-1B	9	A1040111	40006971	2-5B	3	A1190054	40007172	8-1D	12	A1730223
40006782	10-14D	7	A1870444	40006999	8-4A	5	A1750098	40007175	8-3A	5	Q1800018
40006786	2-1A	8	A1040170	40006999	8-4C	7	A1750098	40007175	8-3B	9	Q1800018
40006786	2-1C	9	A1040170	40007000	8-4B	5	A1750037	40007175	8-3C	9	Q1800018
40006803	10-1D	37–40	A1830670	40007001	8-4C	10	A1750044	40007177	8-1A	1	A1730052
40006804	10-1B	37–40	A1830775	40007013	8-4B	3	A1750036	40007177	8-1D	1	A1730052
40006831	10-2A	7	A1840076	40007014	8-4A	10–15	A1750034	40007178	8-1A	2	A1730054
40006831	10-2B	7	A1840076	40007014	8-4B	10–15	A1750034	40007179	8-1B	2	A1730054
40006831	10-2C	7	A1840076	40007023	8-4A	3	A1750026	40007179	8-1C	2	A1730064
40006831	10-2D	7	A1840076	40007024	8-4C	3	A1750047	40007179	8-1D	2	A1730064
40006859	10-1F	26	A1830008	40007030	8-1B	10	A1750170	40007184	8-3A	10	A3CG0005
40006850	10-2B	21	A1840077	40007034	8-1A	10	A1750123	40007184	8-3B	10	A3CG0005
40006850	10-2C	21	A1840071	40007034	8-1D	10	A1750123	40007184	8-3C	10	A3CG0005
40006850	10-2D	21	A1840071	40007035	8-3A	1	A1750217	40007187	8-3A	19	A1750122
40006851	10-2B	20	A1840070	40007035	8-3B	1	A1750217	40007201	8-3A	-	A1750140
40006851	10-2C	20	A1840070	40007035	8-3C	1	A1750217	40007201	8-3B	-	A1750140
40006851	10-2D	20	A1840070	40007045	8-1A	11	A5002054	40007201	8-3C	-	A1750140
40006872	10-14A	8	A1870234	40007045	8-1B	11	A5002054	40007202	8-1C	4	A1760016
40006872	10-14B	8	A1870234	40007045	8-1C	11	A5002054	40007203	8-4A	8	A1750043
40006872	10-14C	8	A1870234	40007045	8-1D	11	A5002054	40007203	8-4B	9	A1750043
40006872	10-14D	8	A1870234	40007049	8-3A	21	A1750257	40007203	8-1C	8	A1750043
40006872	10-14E	8	A1870234	40007049	8-3B	21	A1750257	40007204	8-3A	-	A1750141
40006883	10-14A	3	A1870237	40007049	8-3C	21	A1750257	40007204	8-3B	-	A1750141
40006883	10-14B	3	A1870237	40007068	8-1B	4	A1730201	40007204	8-3C	-	A1750141
40006883	10-14C	3	A1870237	40007068	8-1C	4	A1730201	40007206	8-4A	15	A1760030
40006883	10-14D	3	A1870237	40007063	8-3A	20–21	A1750258	40007206	8-4B	15	A1760030
40006883	10-14F	3	A1870237	40007063	8-3B	20–21	A1750258	40007207	8-1C	5	A1760017
40006890	2-5	11	A1170102	40007063	8-3C	20–21	A1750258	40007208	8-1A	10	A1760031
40006892	2-1A	4	A1040088	40007066	8-4B	4	A1760038	40007208	8-4B	13	A1760017
40006892	2-1B	4	A1040088	40007067	8-4A	4	A1760027	40007216	8-4A	14	A1730076
40006892	2-1D	4	A1040088	40007069	8-3A	7	Q1800011	40007216	8-4B	14	A1730076
40006908	9-5A	3	3A1823010	40007069	8-3B	7	Q1800011	40007243	10-16A	1	A1880010
40006908	9-5B	3	3A1823010	40007069	8-3C	7	Q1800011	40007243	10-16B	15	A1880010
40006908	9-5C	3	3A1823010	40007071	8-1A	6	A1730091	40007252	2-5	14	A1170062
40006908	9-5D	3	3A1823010	40007071	8-1D	6	A1730091	40007253	2-5	16	A1170062

CHASSIS (C3030/C3040)

PART NO.	FIG. NO.	Key No.	PART NO.
40007288	2-4B	6	A1190075
40007289	10-1A	22	A1830252
40007289	10-1B	22	A1830252
40007289	10-1D	22	A1830252
40007289	10-1C	22	A1830252
40007289	10-1E	22	A1830252
40007296	10-1A	21	A1830240
40007296	10-1B	21	A1830240
40007296	10-1D	21	A1830240
40007296	10-1C	21	A1830240
40007296	10-1E	21	A1830240
40007322	3-4A	16	3A1970066
40007322	3-4B	16	3A1970066
40007322	3-4C	16	3A1970066
40007331	6-4A	5	A1630166
40007331	6-4B	5	A1630166
40007331	6-4C	5	A1630166
40007334	10-2B	19	A1970346
40007334	10-2C	19	A1970346
40007334	10-2D	19	A1970346
40007335	10-16A	4	A1880014
40007335	10-16B	7	A1880014
40007336	10-14A	4	A1970347
40007336	10-14B	4	A1970347
40007336	10-14C	4	A1970347
40007336	10-14D	4	A1970347
40007336	10-14E	4	A1970347
40007364	3-4A	14	3A1250079
40007364	5-2B	5	3A1970056
40007364	5-2C	5	3A1970056
40007392	3-2	2	A1670084
40007392	7-2	4	A1670084
40007393	10-16A	5	A1877076
40007393	10-16B	5	A1877076
40007395	2-1C	10	A1040104
40007395	2-1A	18	A1040205
40007395	2-1B	18	A1040205
40007408	9-5A	28	3A1823029
40007408	9-5B	29	3A1823029
40007408	9-5C	33	3A1823029
40007408	9-5D	33	3A1823029
40007408	9-5C	34	3A1823029
40007408	9-5F	34	3A1823029
40007415	10-2A	13	A1840074
40007415	10-2B	13	A1840074
40007415	10-2C	13	A1840074
40007415	10-2D	13	A1840074
40007415	10-14A	2	A1840074
40007415	10-14B	2	A1840074
40007415	10-14C	2	A1840074
40007415	10-14D	2	A1840074
40007415	10-14E	2	A1840074
40007426	2-6A	13	A1190192
40007426	2-6A	14	A1190192
40007426	5-2A	10	3A1970012
40007428	10-1A	3	A1970210
40007428	10-1B	3	A1970210
40007428	10-1D	3	A1970210
40007428	10-1C	3	A1970210
40007428	10-1E	3	A1970210
40007430	9-8	3	A1820080
40007438	10-15C	17	A1890103
40007442	3-4A	25	A1280110
40007442	3-4B	25	A1280110
40007442	3-4C	25	A1280110
40007451	10-1A	8	A1830283

PART NO.	FIG. NO.	Key No.	PART NO.
40007451	10-1B	8	A1830283
40007451	10-1D	8	A1830283
40007451	10-1C	8	A1830283
40007451	10-1E	8	A1830283
40007452	10-1A	49	A1830357
40007452	10-1B	49	A1830357
40007452	10-1D	49	A1830357
40007452	10-1C	49	A1830357
40007452	10-1E	51	A1830357
40007453	10-14A	11	A1870292
40007456	5-4A	12	A1970303
40007456	5-4B	12	A1970303
40007456	10-1A	43	A1970303
40007456	10-1B	43	A1970303
40007456	10-1D	43	A1970303
40007456	10-1C	43	A1970303
40007456	10-1E	43	A1970303
40007457	10-14	36	A1970304
40007457	10-1B	36	A1970304
40007457	10-1D	36	A1970304
40007457	10-1C	36	A1970304
40007457	10-1E	36	A1970304
40007459	2-5	2	A1970360
40007475	6-3	9	A1630153
40007478	10-2A	5	A3260012
40007478	10-2B	5	A3260012
40007478	10-2C	5	A3260012
40007478	10-2D	5	A3260012
40007482	2-5	12	A1170095
40007496	10-1A	44	A1830166
40007496	10-1B	44	A1830166
40007496	10-1D	44	A1830166
40007496	10-1C	44	A1830166
40007496	10-1E	46	A1830166
40007504	9-5A	31	A1823331
40007504	9-5B	31	A1823331
40007504	9-5C	25	A1823331
40007504	9-5D	25	A1823331
40007504	9-5E	40	A1823331
40007504	9-5F	40	A1823331
40007505	6-2A	15	A1630163
40007505	6-2B	15	A1630163
40007505	6-13C	16	A1630163
40007509	9-5A	12	A1823359
40007509	9-5B	12	A1823359
40007509	9-5C	13	A1823359
40007509	9-5D	13	A1823359
40007509	9-5E	13	A1823359
40007509	9-5F	13	A1823359
40007513	6-2A	9	A1630162
40007513	6-2B	9	A1630162
40007513	6-13C	12	A1630162
40007516	3-6A	1	A1283016
40007516	3-6B	1	A1283016
40007531	2-5	7	A1970250
40007533	2-1A	15	A1040074
40007535	2-1B	15	A1040074
40007535	2-1C	13	A1040074
40007537	2-6A	7	A1830261
40007537	2-6B	7	A1830261
40007539	2-1A	16	A1040075
40007539	2-1B	16	A1040075
40007541	6-3	10	A1630161
40007542	10-1A	11	A1970269
40007542	10-1B	11	A1970269
40007542	10-1D	11	A1970269

PART NO.	FIG. NO.	Key No.	PART NO.
40007542	10-1C	11	A1970269
40007542	10-1E	11	A1970269
40007547	6-2A	16	A1630164
40007547	6-2B	16	A1630164
40007547	9-13C	17	A1630164
40007575	2-6A	2	A1180111
40007577	9-2A	5	A1822151
40007577	9-2B	5	A1822151
40007588	9-9C	2	A1827178
40007590	5-8	6–10	A1490022
40007591	5-8	2	A1490707
40007594	9-9B	2	A1827280
40007596	3-1	4	A1250094
40007600	6-4A	3	A1630562
40007600	6-4B	3	A1630562
40007600	6-4C	3	A1630562
40007615	2-5	1	A1170070
40007616	2-6B	1	A1190079
40007618	9-9A	6	A1823279
40007618	9-9B	6	A1823279
40007618	9-9C	7	A1823279
40007618	9-9D	7	A1823279
40007618	9-9E	7	A1823279
40007618	9-9F	7	A1823279
40007620	5-6	5	A1490230
40007626	5-8	5	A1490231
40007638	9-9C	14	A1823315
40007638	9-9F	14	A1823315
40007645	5-6	2	A1490220
40007647	5-6	2	A1490221
40007688	9-3	4	A1823105
40007675	10-4B	3	A1850244
40007678	3-1	3	A1250107
40007686	3-10A	7	A1287283
40007698	9-4	2	A1822077
40007699	10-4C	2–3	A1850221
40007701	9-3	3	A1822091
40007703	10-1A	45	2A1906001
40007703	10-1B	45	2A1906001
40007703	10-1D	45	2A1906001
40007703	10-1C	45	2A1906001
40007703	10-1E	47	2A1906001
40007706	9-3	8	A1822093
40007719	7-1	15	A1650071
40007720	7-1	1-7	A1650072
40007721	7-1	5	A1650063
40007722	10-4B	2–3	A1850092
40007726	9-9A	2	A1827190
40007734	3-10B	5	A1287185
40007737	10-4A	2–7	A1850111
40007742	9-5A	13	A1823132
40007742	9-5B	13	A1823132
40007742	9-5D	14	A1823132
40007742	9-5E	14	A1823132
40007743	2-3	4	A1100054
40007747	5-6	*	A1490035
40007749	5-6	*	921180000
40007751	6-3	6	A1970233
40007754	5-6	4	4CC010520
40007784	10-4C	3	A1850226
40007786	5-5	10	A1480055
40007787	5-5	3	A1490132
40007820	3-5A	8	A1281165
40007820	3-5B	8	A1281165
40007820	3-5C	8	A1281165
40007822	3-1	11	A1250113

CHASSIS (C3030/C3040)

PART NO	FIG. NO	Key No	PART NO.	PART NO	FIG. NO.	Key No	PART NO	PART NO	FIG. NO.	Key No	PART NO.
40007830	5-2A	16	A1400093	40008105	6-4A	10,11	A1630494	40008255	2-1C	3	A1040086
40007831	5-4	7	A1400092	40008135	5-4A	5,11	A1630496	40008256	10-14B	11	A1870211
40007833	3-7A	27	A1328067	40008105	6-2A	3	A1630327	40008256	10-14C	11	A1870211
40007833	3-7B	27	A1328067	40008108	6-2B	3	A1630327	40008256	10-14D	11	A1870211
40007835	3-7A	14	A1328032	40008112	9-2A	1-3	A1624034	40008256	10-14E	11	A1870211
40007835	3-7B	14	A1328032	40008124	9-5E	20,21	A1823486	40008257	10-14B	12	A1870212
40007837	3-1	7	A1250062	40008124	9-5F	20,21	A1823486	40008257	10-14C	12	A1870212
40007845	6-2B	5	A1630619	40008125	9-5E	21-23	A1823490	40008257	10-14D	12	A1870212
40007860	2-1A	17	A1040127	40008125	9-5F	21-23	A1823490	40008257	10-14E	12	A1870212
40007860	2-1B	17	A1040127	40008143	6-4C	9-11	A1630617	40008258	10-14B	13	A1870213
40007862	3-1	3-4	A1250111	40008144	6-4C	10,11	A1630616	40008258	10-14C	13	A1870213
40007871	5-5	17	A1480057	40008145	9-4	3	A1822131	40008258	10-14D	13	A1870213
40007876	5-8	4	A1494044	40008146	9-8	17-22	A1826075	40008258	10-14E	13	A1870213
40007883	9-9A	34	A1827169	40008146	9-9A	23-26	A1826076	40008259	10-14B	14	A1870214
40007883	9-9B	35	A1827169	40008146	9-9B	30-35	A1826078	40008259	10-14C	14	A1870214
40007883	9-9C	30	A1827169	40008146	9-9C	30-35	A1826078	40008259	10-14D	14	A1870214
40007887	8-3A	2	A1750165	40008152	9-6E	21,24	A1823492	40008259	10-14E	14	A1870214
40007887	8-3B	2	A1750165	40008152	9-6F	21,24	A1823492	40008299	8-3A	20	A1750178
40007887	8-3C	2	A1750165	40008153	9-6B	15-20	A1824020	40008299	8-3B	20	A1750178
40007888	2-6A	1-3	A1790110	40008161	9-8	10	A1826037	40008299	8-3C	20	A1750178
40007900	6-2A	8	A1630161	40008162	9-13A	14	A1896080	40008300	8-3A	22	A1750153
40007900	6-2B	9	A1630161	40008162	9-13A	13	A1896081	40008300	8-3B	22	A1750153
40007900	6-2C	11	A1630161	40008164	9-6A	20	A1823076	40008300	8-3C	22	A1750153
40007901	5-2B	12	A1400077	40008164	5-2B	20	A1823076	40008308	10-1A	25	A1830257
40007901	5-2C	12	A1400077	40008164	9-6C	21	A1823076	40008308	10-1B	25	A1830257
40007917	3-9A	17	A1287211	40008164	9-6D	21	A1823076	40008308	10-1D	25	A1830257
40007917	3-9B	6	A1287211	40008165	9-2B	1-3	A1824025	40008308	10-1C	25	A1830257
40007918	5-2B	11	A1400160	40008166	9-12	15-18	3A1806002	40008308	10-1E	25	A1830257
40007918	5-2C	11	A1400160	40008172	6-2A	7	A1630319	40008309	2-5	13	A1170031
40007918	5-4	20	A1400160	40008172	6-2B	7	A1630319	40008318	8-3A	4	A3CA7237
40007922	9-9A	25	A1827177	40008178	6-4B	10,11	A1CM5002	40008327	10-14A	14	3A1870006
40007922	9-9C	23	A1827177	40008178	6-4C	10,11	A1CM5002	40008327	10-14B	15	3A1870006
40007925	2-2	4	A1100045	40008179	6-4B	9,11	A1CM5003	40008327	10-14C	15	3A1870006
40007937	6-2A	1	A1630245	40008179	6-4C	9,11	A1CM5003	40008327	10-14D	15	3A1870006
40007937	6-2B	1	A1630245	40008180	9-6B	19-21	A1CM5009	40008327	10-14E	15	3A1870006
40007964	10-15D	16	A1880049	40008181	5-4C	20-24	A1CM5009	40008339	2-5	7	A1100058
40007972	9-3	5	A1322005	40008181	9-6D	20-24	A1CM5009	40008344	9-1A	13	3A1821004
40007983	5-2B	19	A1400075	40008182	5-6A	19-21	A1CM5006	40008344	9-1D	13	3A1821004
40007983	5-2C	19	A1400075	40008219	6-3	13-15	A5002130	40008365	9-7A	17	A1825057
40007991	6-4A	11,12	A1630496	40008220	10-1D	15	A1830328	40008368	9-7B	18	A1825057
40007991	6-4B	11,12	A1630496	40008220	10-1C	15	A1830328	40008371	10-1A	23	A1830263
40007991	6-4C	11,12	A1630496	40008220	10-1E	15	A1830328	40008371	10-1B	23	A1830263
40008018	9-10B	1-15	A1828055	40008221	10-1A	15	A1830584	40008371	10-1D	23	A1830263
40008019	9-12	1	A1896460	40008221	10-1B	15	A1830584	40008371	10-1C	23	A1830263
40008020	9-14	3-6	A1896471	40008221	10-1D	15	A1830584	40008371	10-1E	23	A1830263
40008022	9-13B	11	A1896523	40008221	10-1C	15	A1830584	40008375	9-14A	36	A1870241
40008042	6-4B	8,11	A1630587	40008221	10-1E	15	A1830584	40008375	9-14B	17	A1870241
40008042	6-4C	8,11	A1630587	40008222	10-1A	16	A1830585	40008376	7-2A	5	A1870241
40008047	9-1B	15	A1821095	40008222	10-1B	16	A1830585	40008376	9-7A	6	A1870241
40008061	9-3A	18	A1827285	40008222	10-1D	16	A1830585	40008376	9-7B	16	A1870241
40008062	9-11C	4-8	A1091056	40008222	10-1C	16	A1830585	40008376	8-4C	10	A1870269
40008067	6-1	1-5	A1610031	40008222	10-1E	16	A1830585	40008377	9-14A	37	A1870290
40008071	6-4A	8,11	A1630564	40008229	10-1A	17	A1830220	40008377	9-14B	18	A1870289
40008071	6-4C	8,11	A1630564	40008229	10-1B	17	A1830220	40008380	9-8	14	A1970253
40008074	9-5B	1-12	A1824024	40008229	10-1D	17	A1830220	40008380	9-9A	27	A1970253
40008083	9-13B	13	A1896525	40008229	10-1C	17	A1830220	40008380	9-9B	27	A1970253
40008087	6-2A	5-10	A1630293	40008229	10-1E	17	A1830220	40008380	9-9C	27	A1970253
40008087	6-2B	5-10	A1630293	40008230	10-1A	18	A1830223	40008398	6-3	14	A5000583
40008088	9-4	1-6	A1822127	40008230	10-1B	18	A1830223	40008400	9-7A	22	A1825056
40008088	6-3	4-8	A1830230	40008245	10-14A	12	A1870288	40008400	9-7B	22	A1825056
40008089	6-3	3-11	A1822089	40008252	10-14A	12	A1870288	40008401	10-15D	5	A1870171
40008100	9-12	1	A1896320	40008254	2-1A	2	A1040085	40008402	10-1A	27	A1830286
40008102	6-1	5	A1610035	40008254	2-1B	2	A1040085	40008402	10-1B	27	A1830286
40008103	6-1	1	A1610036	40008254	2-1C	2	A1040085	40008402	10-1D	27	A1830286
40008104	6-4A	13	A1630338	40008255	2-1A	3	A1040086	40008402	10-1C	27	A1830286
40008104	6-4B	13	A1630338	40008255	2-1B	3	A1040086	40008402	10-1E	27	A1830286

CHASSIS (C3030/C3040)

PART NO.	FIG. NO.	Key No	PART NO.
4000[illegible]	9-5A	4	A1970262
4000[illegible]	9-5B	4	A1970242
4000[illegible]	9-5C	4	A1970242
4000[illegible]	2-13	1	A1970275
4000[illegible]	2-2	5	A1970286
4000[illegible]	2-5	5	A1970286
4000[illegible]	3-14A	17	A1970291
4000[illegible]	2-1A	1	A1040052
4000[illegible]	2-1B	1	A1040052
4000[illegible]	2-1C	1	A1040052
4000[illegible]	6-3B	4	A5001136
4000[illegible]	6-3C	4	A5001136
4000[illegible]	8-4A	10	A1760032
4000[illegible]	8-4B	10	A1760032
4000[illegible]	9-3	8	A1822001
4000[illegible]	11-2B	32	A1981161
4000[illegible]	11-2B	32	A1981162
4000[illegible]	11-2A	20	A1980983
4000[illegible]	11-2B	21	A1980983
4000[illegible]	11-2C	25	A1980983
4000[illegible]	11-2D	12	A1980983
4000[illegible]	11-2E	23	A1980983
4000[illegible]	11-2F	17	A1980983
4000[illegible]	11-2G	12	A1980983
4000[illegible]	11-2A	12	A1980984
4000[illegible]	11-2B	22	A1980984
4000[illegible]	11-2C	26	A1980984
4000[illegible]	11-2D	13	A1980984
4000[illegible]	11-2E	24	A1980984
4000[illegible]	11-2F	18	A1980984
4000[illegible]	11-2G	13	A1980984
4000[illegible]	11-2B	6	A1980734
4000[illegible]	11-2C	7	A1980734
4000[illegible]	11-2E	7	A1980734
4000[illegible]	11-2F	6	A1980734
4000[illegible]	11-2B	7	A1980736
4000[illegible]	11-2C	8	A1980736
4000[illegible]	11-2E	8	A1980736
4000[illegible]	11-2F	6	A1980736
4000[illegible]	11-2B	9	A1980785
4000[illegible]	11-2C	10	A1980785
4000[illegible]	11-2D	7	A1980785
4000[illegible]	11-2F	10	A1980785
4000[illegible]	11-2F	8	A1980785
4000[illegible]	11-2C	11	A1980788
4000[illegible]	11-2E	11	A1980788
4000[illegible]	11-2F	9	A1980788
4000[illegible]	11-2F	10	A1980790
4000[illegible]	11-2B	11	A1980891
4000[illegible]	11-2C	15	A1980891
4000[illegible]	11-2E	13	A1980891
4000[illegible]	11-2B	30	A1981076
4000[illegible]	11-2C	34	A1981076
4000[illegible]	11-2E	32	A1981076
4000[illegible]	11-2F	25	A1981076
4000[illegible]	11-2B	16	A1980940
4000[illegible]	11-2C	20	A1980940
4000[illegible]	11-2E	19	A1980940
4000[illegible]	11-2F	14	A1980940
4000[illegible]	11-2A	14	A1981071
4000[illegible]	11-2C	36	A1980847
4000[illegible]	11-2E	35	A1980847
4000[illegible]	11-2G	37	A1980847
4000[illegible]	11-2A	23	A1981066
4000[illegible]	11-2F	31	A1981066
4000[illegible]	11-2C	35	A1980848

PART NO.	FIG. NO.	Key No	PART NO
4000[illegible]	11-2E	35	A1980848
4000[illegible]	11-2B	37	A1980849
4000[illegible]	11-2B	17	A1980989
4000[illegible]	11-2C	18	A1980990
4000[illegible]	11-2E	19	A1980992
4000[illegible]	11-2G	20	A1980993
4000[illegible]	11-2C	21	A1980994
4000[illegible]	11-2G	22	A1980995
4000[illegible]	11-2C	23	A1980996
4000[illegible]	11-2G	24	A1980997
4000[illegible]	11-2G	25	A1980998
4000[illegible]	11-2G	26	A1981001
4000[illegible]	11-2G	29	A1981002
4000[illegible]	11-2G	30	A1981003
4000[illegible]	11-2G	31	A1981004
4000[illegible]	11-2G	32	A1981005
4000[illegible]	11-2G	33	A1981006
4000[illegible]	11-2G	34	A1981007
4000[illegible]	11-2A	26	A1981008
4000[illegible]	11-2C	32	A1981068
4000[illegible]	11-2D	30	A1981068
4000[illegible]	11-2E	26	A1981068
4000[illegible]	11-2G	35	A1981068
4000[illegible]	6-3	15	A1981077
4000[illegible]	10-1A	49	A1980490
4000[illegible]	10-1B	48	A1980490
4000[illegible]	10-1D	48	A1980490
4000[illegible]	10-1C	49	A1980490
4000[illegible]	10-1E	50	A1980490
4000[illegible]	11-2A	2	A1980490
4000[illegible]	11-2F	27	A1980490
4000[illegible]	11-2A	30	A1980536
4000[illegible]	11-2A	16	A1980572
4000[illegible]	11-2B	1	A1980573
4000[illegible]	11-2C	1	A1980573
4000[illegible]	11-2D	1	A1980573
4000[illegible]	11-2F	1	A1980573
4000[illegible]	11-2F	1	A1980573
4000[illegible]	11-2G	1	A1980573
4000[illegible]	11-2C	3	A1980576
4000[illegible]	11-2E	3	A1980576
4000[illegible]	11-2G	2	A1980576
4000[illegible]	11-2A	32	A1980718
4000[illegible]	11-2F	29	A1980718
4000[illegible]	11-2B	3	A1980720
4000[illegible]	11-2C	4	A1980720
4000[illegible]	11-2D	3	A1980720
4000[illegible]	11-2E	4	A1980720
4000[illegible]	11-2E	3	A1980720
4000[illegible]	11-2A	17	A1980721
4000[illegible]	11-2B	4	A1980721
4000[illegible]	11-2C	5	A1980721
4000[illegible]	11-2D	4	A1980721
4000[illegible]	11-2E	5	A1980721
4000[illegible]	11-2F	2	A1980721
4000[illegible]	11-2G	4	A1980721
4000[illegible]	11-2A	10	A1980722
4000[illegible]	11-2B	5	A1980722
4000[illegible]	11-2C	6	A1980722
4000[illegible]	11-2D	5	A1980722
4000[illegible]	11-2E	6	A1980722
4000[illegible]	11-2F	3	A1980722
4000[illegible]	11-2G	5	A1980722
4000[illegible]	11-2A	33	A1980723
4000[illegible]	11-2B	4	A1980723
4000[illegible]	11-2G	8	A1980723

PART NO.	FIG. NO.	Key No	PART NO
4000[illegible]	11-2B	8	A1980745
4000[illegible]	11-2C	8	A1980745
4000[illegible]	11-2D	6	A1980746
4000[illegible]	11-2F	9	A1980746
4000[illegible]	11-2F	7	A1980740
4000[illegible]	11-2A	5	A1980602
4000[illegible]	11-2A	6	A1980603
4000[illegible]	11-2A	7	A1980606
4000[illegible]	11-2A	8	A1980606
4000[illegible]	11-2A	9	A1980607
4000[illegible]	11-2A	10	A1980609
4000[illegible]	11-2A	11	A1980612
4000[illegible]	11-2A	19	A1980621
4000[illegible]	11-2F	33	A1980632
4000[illegible]	11-2B	10	A1980635
4000[illegible]	11-2C	12	A1980636
4000[illegible]	11-2D	8	A1980635
4000[illegible]	11-2E	33	A1980636
4000[illegible]	11-2G	7	A1980635
4000[illegible]	11-2C	14	A1980642
4000[illegible]	11-2E	12	A1980642
4000[illegible]	11-2G	9	A1980642
4000[illegible]	11-2B	12	A1980602
4000[illegible]	11-2C	16	A1980602
4000[illegible]	11-2D	9	A1980602
4000[illegible]	11-2E	15	A1980602
4000[illegible]	11-2B	13	A1980605
4000[illegible]	11-2C	17	A1980605
4000[illegible]	11-2L	16	A1980605
4000[illegible]	11-2F	11	A1980605
4000[illegible]	11-2B	14	A1980608
4000[illegible]	11-2C	19	A1980606
4000[illegible]	11-2L	17	A1980606
4000[illegible]	11-2F	17	A1980606
4000[illegible]	11-2B	15	A1980607
4000[illegible]	11-2C	19	A1980607
4000[illegible]	11-2E	18	A1980607
4000[illegible]	11-2F	13	A1980607
4000[illegible]	11-2B	17	A1980941
4000[illegible]	11-2C	21	A1980941
4000[illegible]	11-2E	20	A1980941
4000[illegible]	11-2B	20	A1980963
4000[illegible]	11-2G	24	A1980963
4000[illegible]	11-2D	11	A1980963
4000[illegible]	11-2E	22	A1980963
4000[illegible]	11-2F	16	A1980963
4000[illegible]	11-2A	21	A1980985
4000[illegible]	11-2B	23	A1980985
4000[illegible]	11-2C	27	A1980985
4000[illegible]	11-2D	14	A1980985
4000[illegible]	11-2C	25	A1980985
4000[illegible]	11-2F	15	A1980985
4000[illegible]	11-2G	14	A1980985
4000[illegible]	11-2A	22	A1980986
4000[illegible]	11-2B	24	A1980986
4000[illegible]	11-2C	28	A1980986
4000[illegible]	11-2D	15	A1980986
4000[illegible]	11-2C	28	A1980986
4000[illegible]	11-2F	20	A1980986
4000[illegible]	11-2G	16	A1980986
4000[illegible]	11-2A	29	A1980987
4000[illegible]	11-2B	25	A1980987
4000[illegible]	11-2D	29	A1980987
4000[illegible]	11-2D	16	A1980987
4000[illegible]	11-2E	27	A1980987
4000[illegible]	11-2F	21	A1980987

CHASSIS (C3030/C3040)

PART NO.	FIG. NO	Key No	PART NO
40008815	11-2G	16	A1980927
40008816	11-2A	13	A1980996
40008816	11-2B	26	A1980969
40008816	11-2C	30	A1980999
40008816	11-2D	17	A1980999
40008816	11-2E	28	A1980999
40008816	11-2F	22	A1980999
40008815	11-2G	26	A1980999
40008817	11-2B	27	A1981000
40008817	11-2C	31	A1981000
40008817	11-2E	25	A1981000
40008817	11-2F	29	A1981000
40008817	11-2G	27	A1981000
40008827	11-2B	28	A1981038
40008828	11-2D	31	A1981039
40008832	11-2A	15	A1981073
40008832	11-2A	25	A1981074
40008852	11-2A	24	A1981077
40008885	11-2A	28	A1980916
40008885	11-2F	28	A1980916
40008888	11-2B	2	A1980982
40008888	11-2C	2	A1980983
40008888	11-2D	2	A1980983
40008888	11-2E	2	A1980983
40008889	11-2A	31	A1980985
40008892	11-2A	4	A1980771
40008893	11-2B	29	A1981075
40008893	11-2C	35	A1981075
40008893	11-2E	31	A1981075
40008893	11-2I	24	A1981075
40008893	11-2G	36	A1981075
40008899	11-2A	1	A1980430
40008900	11-2A	3	A1980684
40008939	5-2C	13	A1400291
40008940	5-2B	13	A1400292
40008941	5-5	1	A1400070
40008942	5-5	36	A1400071
40008956	5-2A	15	A1400104
40008966	9-1C	5	A1891057
40008966	9-1B	6	A1891058
40008965	9-1A	7	A1891030
40008965	9-1B	7	A1891030
40008960	3-5A	26	A1280221
40008991	3-10A	17	A1287293
40008994	4-2	2	A1324091
40008995	5-2B	9	A1400209
40008995	5-2C	9	A1400290
40009002	5-5	12	A1480057
40009008	5-5	11	A1481036
40009009	3-10B	11	A1287217
40009011	3-5C	22	A1281476
40009019	3-4A	2	A1292144
40009019	3-4B	2	A1292144
40009019	3-4C	2	A1292144
40009021	5-2B	10	A1400292
40009021	5-2C	10	A1400292
40009022	3-5B	26	A1281363
40009027	5-5	18	A1481039
40009028	5-2A	3	A1400163
40009053	3-6A	25	A1281366
40009053	3-6B	32	A1281366
40009065	3-7D	17	A1285130
40009070	3-9A	7	A1287203
40009071	3-9B	8	A1287214
40009073	3-9A	8	A1287202
40009096	5-4	11	A1400123

PART NO.	FIG. NO	Key No	PART NO
40009103	3-6B	9	A1281302
40009115	3-7A	21	A1285150
40009115	3-7B	21	A1285150
40009135	3-5A	9	A1281422
40009135	3-5B	9	A1281422
40009135	3-5C	9	A1281422
40009141	3-5A	10	A1281354
40009141	3-5D	10	A1281354
40009141	3-5C	10	A1281354
40009141	3-6A	8	A1281354
40009141	3-6B	14	A1281354
40009142	3-6B	13	A1281579
40009151	3-6B	7	A1281577
40009152	3-7B	6	A1285149
40009152	3-5A	16	A1281482
40009152	3-5B	16	A1281482
40009152	3-5C	15	A1281482
40009156	3-6A	20	A5000053
40009156	3-6B	27	A5000053
40009169	3-6B	19	A1281579
40009174	9-6A	33	A1827286
40009174	9-9B	38	A1827286
40009174	9-9C	35	A1827286
40009196	7-1	16	A1650076
40009197	7-1	3	A1550077
40009222	9-12	17	A1288064
40009224	3-6A	27	A1281447
40009224	3-6B	34	A1281447
40009227	3-7A	17	A1285164
40009232	3-9A	3	A1287204
40009267	3-10C	5	A1287294
40009267	3-6A	14	A1281273
40009267	3-6B	21	A1281273
40009273	5-4	1	A1400120
40009276	3-10A	25	A1287295
40009276	3-10C	13	A1287295
40009286	3-10A	10	A1287290
40009287	3-7A	6	A1285130
40009303	3-6A	19	A1281446
40009303	3-6B	26	A1281446
40009309	9-3	11	A1822090
40009315	3-14A	10	A1291163
40009315	3-14B	10	A1291163
40009322	4-1	7	A1320025
40009327	5-2B	4	A1402067
40009327	5-2C	1	A1402067
40009340	3-7A	11	A1285141
40009340	3-7B	10	A1285141
40009344	3-13	17	A1290115
40009357	3-12	15	A1288081
40009365	3-9B	10	A1287218
40009368	3-7B	3	A1285190
40009374	5-5	2	A1481037
40009379	3-6A	33	A1281310
40009380	3-6A	23	A1281449
40009380	3-6B	30	A1281449
40009384	3-5A	14	A1281361
40009384	3-5B	14	A1281361
40009384	3-5C	14	A1281361
40009384	3-5D	12	A1281361
40009384	3-5B	18	A1281361
40009384	3-9A	5	A1281361
40009386	5-4	1	A1822128
40009392	5-2A	5	A1400100
40009401	3-12	9	A1288002
40009405	3-5A	17	A1281426

PART NO.	FIG. NO.	Key No	PART NO
40009405	3-5A	17	A1281426
40009405	3-7A	3	A1285153
40009407	3-5C	18	A1281483
40009408	3-5A	20	A1281435
40009409	3-5B	20	A1281435
40009413	3-14A	2	A1291135
40009413	3-14B	2	A1291135
40009414	5-2A	8	A1400118
40009427	3-6A	36	A1281272
40009428	3-5A	12	A1281384
40009428	3-5B	12	A1281384
40009428	3-5C	12	A1281384
40009428	3-6A	10	A1281384
40009428	3-6B	16	A1281384
40009428	3-5A	6	A1281384
40009429	3-13	21	A1290064
40009431	3-4A	11	A1280088
40009431	3-4B	11	A1280088
40009431	3-4C	11	A1280088
40009434	4-2	3	A1324071
40009435	5-2A	25	A1400119
40009436	9-1A	15	2A1821006
40009436	3-9A	16	A1287161
40009439	3-10B	9	A1283152
40009441	3-10	16	A1290090
40009442	3-13	11	A1290101
40009444	9-1A	8	A1821029
40009444	9-1B	9	A1821029
40009447	10-1E	44	A1970310
40009462	7-1	2	3A1550007
40009469	9-13A	5	A1896090
40009470	9-10D	4	A1896093
40009478	9-11B	4	A1891035
40009478	9-11C	9	A1891035
40009459	6-2A	5	A1630159
40009498	6-2B	5	A1630159
40009495	9-7A	3	A1825085
40009495	9-7D	3	A1825085
40009496	3-13	25	A1291145
40009496	3-14A	31	A1291145
40009496	3-14B	16	A1291145
40009510	5-3	10	A1410030
40009512	5-2B	1	3A1970055
40009512	5-2C	1	3A1970055
40009516	9-2A	9	3A1970069
40009516	5-2B	20	3A1970069
40009516	5-2C	20	3A1970069
40009531	4-2	10	A1324090
40009534	3-12	6	A1896473
40009536	5-2B	25	A1970037
40009536	5-2C	25	A1970037
40009539	5-1	1	A1400129
40009543	2-7A	13	A1215028
40009543	2-7B	13	A1215028
40009545	3-9A	1	A1287179
40009545	3-9B	1	A1287179
40009548	5-5	4	A1481340
40009549	10-1A	15	A1830417
40009549	10-1B	19	A1830417
40009549	10-1D	19	A1830417
40009549	10-1C	19	A1830417
40009549	10-1E	19	A1830417
40009554	9-5A	33	A1970325
40009554	9-5B	33	A1970325
40009551	9-5C	5	A1970325
40009554	9-5D	6	A1970325

CHASSIS (C3030/C3040)

PART NO.	FIG. NO.	Key No	PART NO.
40009654	9-5E	8	A1970025
40009654	9-5F	4	A1970325
40009650	3-5A	26	A1281496
40009650	3-5B	25	A1281496
40009650	3-5C	21	A1281496
40009599	3-10A	23	A1207290
40009604	9-2A	12	A1822031
40009604	9-2B	12	A1822031
40009605	9-6A	6	A1824032
40009614	3-1	1	A1281425
40009617	7-2	14	A1670116
40009618	7-3B	19	A1670282
40009626	5-10A	24	3A1670052
40009626	5-2A	1	3A1570052
40009626	5-2B	6	3A1570052
40009626	5-2C	6	3A1570052
40009633	5-13	19	A1290105
40009632	5-14A	9	A1281170
40009645	5-2A	24	3A1970051
40009651	9-1A	16	3A1821007
40009659	5-13	26	A1390117
40009663	9-8	6	A1826033
40009666	9-7A	4	A1826064
40009668	3-6B	5	A1281507
40009680	3-7A	25	A1326069
40009683	3-7B	29	A1326068
40009690	5-2A	21	3A1410034
40009699	3-5A	30	3A1970157
40009699	3-5B	30	3A1970157
40009699	3-5C	25	3A1970157
40009699	3-6A	25	3A1970157
40009655	3-6B	33	3A1970157
40009699	3-7A	9	3A1970157
40009699	3-7B	9	3A1970157
40009702	3-8A	5	A1281324
40009702	3-8B	11	A1281324
40009704	3-8A	13	A1281323
40009704	3-8B	20	A1281323
40009705	3-6A	29	A1281319
40009705	3-6B	36	A1281319
40009705	3-7A	12	A1281319
40009705	3-7B	12	A1281319
40009716	5-4	2	3A1570034
40009718	9-1A	11	3A1821005
40009718	9-1B	11	3A1821005
40009728	7-1	7	A1650078
40009733	3-10A	35	A1287205
40009733	3-10C	4	A1287205
40009740	4-2	7	A1321116
40009748	3-1	8	A1290112
40009771	3-5A	29	A1281300
40009785	4-1	5	A1280051
40009789	4-1	16	A1280052
40009792	3-4A	13	A1250049
40009792	3-4B	13	A1250049
40009792	3-4C	13	A1250049
40009792	9-1A	3	A1250049
40009792	9-1B	3	A1250049
40009793	3-6B	6	A1281376
40009800	3-5A	34	A1281299
40009810	4-2	8	3A1524007
40009810	9-4	4	A5001244
40009819	9-9A	10	A1827151
40009819	9-9B	12	A1827151
40009819	9-9C	12	A1827151
40009839	3-9A	20	A1280096

PART NO.	FIG. NO.	Key No	PART NO.
40009839	3-9B	20	A1280096
40009839	3-9C	20	A1280096
40009839	3-10A	21	A1280096
40009835	3-10B	14	A1280096
40009835	3-10C	9	A1280096
40009844	3-6A	24	A1281399
40009844	3-6B	31	A1281399
40009854	3-11A	23	A1291147
40009870	4-2	5	A1321117
40009871	4-2	6	A1321118
40009872	4-1	13	A1326016
40009874	7-2	10	A1970230
40009875	2-7A	18	A1970350
40009876	2-7B	18	A1970350
40009888	4-2	9	3A1324014
40009899	2-7A	19	A1830248
40009899	2-7B	19	A1830248
40009901	3-14A	38	A1291177
40009901	3-14B	15	A1291177
40009906	5-4	18	A1402017
40009907	9-5F	21	A1823144
40009907	9-5F	21	A1823144
40009907	9-15	18	A1823144
40009919	9-9A	13	A1823157
40009919	9-9B	15	A1823157
40009919	9-9C	15	A1823157
40009921	5-2B	21	3A1970057
40009921	5-2C	21	3A1970057
40009922	5-2A	11	3A1970050
40009920	6-2A	10	A1630167
40009928	6-2B	10	A1630160
40009920	9-13C	10	A1630160
40009934	3-8A	3	A1281034
40009934	3-8B	3	A1281034
40009934	5-4	15	A1281034
40009935	5-2A	22	3A1970065
40009936	3-6A	43	A1287079
40009936	3-7A	13	A1287079
40009936	3-7B	13	A1287079
40009938	5-5	9	A1481041
40009940	3-4A	24	A1280116
40009940	3-4B	24	A1280116
40009940	3-4C	24	A1280116
40009946	3-5A	13	3A1281020
40009946	3-5B	13	3A1281020
40009946	3-5C	13	3A1281020
40009946	3-8A	11	3A1281020
40009946	3-8B	17	3A1281020
40009969	3-7A	18	A1285151
40009969	3-7B	18	A1285151
40009984	5-2B	15	A1400286
40009984	5-2C	15	A1400286
40009972	3-14A	25	A1291146
40009975	9-5	15	A1826130
40009975	9-9A	31	A1826130
40009975	9-9B	28	A1826130
40009975	9-9C	28	A1826130
40009978	6-4A	11	A1630144
40009978	6-4B	11	A1630144
40009978	6-4C	11	A1630144
40009997	5-3	3	3A1415004
40009990	9-10B	15	3A1828025
40010006	9-8	7	3A1970032
40010027	3-12	18	A1200065
40010044	3-10A	2	A1287290
40010046	3-6A	6	A1287123

PART NO.	FIG. NO.	Key No	PART NO.
40010046	3-6B	6	A1281423
40010046	3-6C	16	A1281423
40010047	3-9A	4	A1281081
40010059	3-9B	12	A1287215
40010070	3-6A	17	A1281161
40010070	3-6B	24	A1281161
40010077	2-6A	24	A1291481
40010077	3-5B	24	A1291481
40010077	3-5C	20	A1291481
40010079	3-5A	42	A1281316
40010082	3-7A	8	A1281303
40010082	3-7B	8	A1281303
40010083	3-5A	7	A1281424
40010083	3-5B	7	A1281424
40010083	3-5C	7	A1281424
40010084	3-12	12	A1280045
40010107	5-4	9	A1400127
40010113	3-6A	7	A1281298
40010116	3-7A	26	A1326066
40010116	3-7B	26	A1326066
40010122	3-7B	19	A1285139
40010123	3-7A	19	A1285155
40010125	4-1	2	3A1326005
40010126	5-2A	7	3A1970006
40010150	9-5C	23	A1823189
40010153	9-5D	23	A1823189
40010153	9-5L	23	A1823189
40010153	9-5F	23	A1823189
40010164	3-4A	21	A1280115
40010164	3-4B	21	A1280115
40010164	3-4C	21	A1280115
40010166	3-12	18	A1290106
40010171	3-14A	27	A1291142
40010172	3-10A	35	A1291148
40010175	4-1	3	A1326048
40010187	6-3	6	A1630232
40010189	3-14A	14	A1291121
40010190	3-1	10	A1290107
40010200	3-13	15	A1290104
40010205	4-2	1	A1324075
40010207	9-12	17	3A1896013
40010214	3-12	6	A1288026
40010230	3-6A	6	A1281297
40010230	3-6B	12	A1281297
40010233	3-5A	9	A1281192
40010233	3-9B	3	A1281192
40010238	3-6A	40	A1281322
40010240	3-6A	35	A1281321
40010245	3-7A	11	A1285063
40010245	3-7B	11	A1285063
40010251	9-9B	9	A1827152
40010251	9-9C	9	A1827152
40010252	9-5B	34	A1827157
40010252	9-5C	30	A1827157
40010252	9-5D	30	A1827157
40010252	9-5L	31	A1827157
40010252	9-5F	31	A1827157
40010267	3-6A	1	A1281101
40010267	3-6B	1	A1281101
40010267	3-6C	1	A1281101
40010261	3-13	10	A1290058
40010262	3-13	7	A1290100
40010270	3-14A	11	A1291149
40010270	3-14B	11	A1291149
40010275	5-15	17	A1823092
40010276	3-12	30	A1290100

CHASSIS (C3030/C3040)

PART NO.	FIG NO.	Key No	PART NO.	PART NO.	FIG NO.	Key No	PART NO.	PART NO.	FIG NO.	Key No	PART NO.
40010283	3-13	20	A1290115	40010516	10-13	30	A1830773	40011201	2-6B	4	A1190115
40010284	3-13	26	A1290111	40010520	10-20	9	A1840340	40011214	9-5A	16	A1823264
40010287	3-15	6	A1290102	40010521	10-20	10	A1840350	40011214	9-5B	16	A1823264
40010297	3-6A	37	A1261020	40010522	10-20	8	A1840351	40011214	9-5D	17	A1823264
40010298	3-10B	2	A1285191	40010523	10-20	17	A1840352	40011214	9-5E	17	A1823264
40010299	3-10A	5	A1297289	40010524	10-20	15	A1840353	40011216	8-3	1	A1030222
40010310	3-13	24	A1290097	40010527	10-14B	1	A1870495	40011225	10-2A	1	A1840367
40010313	3-14A	1	A1291144	40010882	2-4	1	A1151141	40011225	10-2B	1	A1840367
40010313	3-14B	1	A1291144	40010910	10-1A	38	A1830242	40011225	10-2C	1	A1840367
40010316	9-12	19	3A1896006	40010910	10-1D	36	A1830242	40011225	10-2D	1	A1840367
40010318	9-12	16	3A1898007	40010910	10-1C	38	A1830242	40011234	2-5	5	A1170125
40010320	9-9	5	3A1829003	40010910	10-1G	30	A1830242	40011237	9-5D	32	A1823181
40010321	9-5A	22	A1630201	40010914	9-7A	1	A1210127	40011237	9-5D	32	A1823181
40010321	9-5D	22	A1630201	40010919	2-7B	1	A1210338	40011237	9-5E	33	A1823181
40010321	9-5C	31	A1630201	40010929	10-1A	1	A1830306	40011237	9-5F	33	A1823181
40010321	9-5D	31	A1630201	40010929	10-1B	1	A1830306	40011244	3-2	1	A1280089
40010321	9-5E	32	A1630201	40010929	10-1D	1	A1830306	40011247	10-15A	2	A1870239
40010321	9-5F	32	A1630201	40010929	10-1C	1	A1830306	40011248	10-15A	1	A1870243
40010321	9-9A	8	A1630201	40010929	10-1E	1	A1830306	40011252	4-1	11	A1320049
40010321	9-9B	10	A1630201	40010972	2-4	3	A1151133	40011266	10-2A	2	A1840068
40010321	9-8C	10	A1630201	40010970	10-15D	3	A1840072	40011265	10-2D	2	A1840068
40010327	9-12	9	A1836187	40010977	10-14E	27	A1920052	40011265	10-2C	2	A1840068
40010331	3-14B	9	A1291142	40010996	7-2B	2	A1670283	40011265	10-2D	2	A1840068
40010334	5-2A	18	3A1400010	40011008	6-4A	10	A1630470	40011270	7-2	3	A1570150
40010336	3-14A	24	A1290096	40011007	6-4A	9	A1630471	40011287	8-3B	17	A1757267
40010337	3-1	9	A1290046	40011009	6-4B	8	A1630588	40011288	8-3A	17	A1750266
40010338	3-6A	28	A1281046	40011010	6-4C	8	A1630588	40011288	8-3C	17	A1750268
40010339	3-6B	35	A1281046	40011014	9-5E	20	A1623487	40011290	7-1	4	A1650107
40010339	3-13	13	A20063390	40011014	9-5F	20	A1623487	40011302	9-11C	5	A1821056
40010339	3-14A	28	A20063390	40011050	9-7A	20	A1625159	40011307	10-15D	10	A1870257
40010339	3-14B	10	A20063390	40011050	9-7B	22	A1625159	40011308	10-15D	11	A1870258
40010340	9-8	23	A20063480	40011054	9-11B	1	A1891049	40011313	2-3	1	A1190052
40010340	9-9A	29	A20063480	40011054	9-11C	1	A1891049	40011349	7-1	13	A1870254
40010340	9-9B	36	A20063480	40011065	9-5C	17	A1823579	40011350	7-1	14	A1870255
40010340	9-9C	36	A20063480	40011065	9-5F	17	A1823579	40011353	7-3B	7	A1870328
40010341	4-1	15	A26709980	40011069	7-2	1	A1870327	40011378	9-5F	22	A1823491
40010341	5-4	22	A26709980	40011072	2-4	2	A1151140	40011379	9-5F	22	A1823491
40010387	9-1A	4	A1820032	40011083	6-4A	12	A1630457	40011385	9-10B	1	A1828034
40010387	9-1B	4	A1820032	40011083	6-4B	12	A1630457	40011385	10-1E	49	A1830421
40010388	8-1	4	A1610023	40011083	6-4C	12	A1630457	40011411	10-15C	3	A1880130
40010390	6-2A	19	A1630320	40011091	9-9A	15	A1627279	40011414	10-16B	8	A1880126
40010390	6-2B	19	A1630320	40011091	9-9B	17	A1627279	40011415	10-16B	9	A1880127
40010391	6-2A	11	A1630321	40011091	9-9C	17	A1627279	40011420	9-12B	12	A1896529
40010391	6-2B	11	A1630321	40011092	9-9B	19	A1627280	40011421	9-13C	24	A1896554
40010392	6-2A	14	A1630322	40011092	9-9C	19	A1627280	40011424	9-14	3	A1896559
40010392	6-2B	14	A1630322	40011093	9-9B	15	A1627281	40011425	9-14	4	A1896597
40010693	10-1D	39	A1830501	40011093	9-9C	15	A1627281	40011436	9-14A	21	A1291155
40010700	10-1D	29	A1830504	40011094	9-9B	20	A1627282	40011454	10-15B	2	A1870304
40010701	10-1D	30	A1830505	40011094	9-9C	20	A1627282	40011455	10-15B	1	A1870305
40010707	10-1D	24	A1830506	40011096	9-9A	16	A1627284	40011476	7-3B	5	A1670286
40010711	10-2D	9	A1840261	40011097	6-4A	8	A1630565	40011477	7-3B	15	A1670287
40010712	10-2D	10	A1840262	40011097	6-4C	8	A1630565	40011478	9-7B	14	A1825080
40010713	10-3D	8	A1840263	40011100	9-5E	24	A1823493	40011479	9-7A	10	A1825145
40010714	10-2D	17	A1840264	40011100	9-5F	24	A1823493	40011479	9-7B	15	A1825145
40010715	10-2D	18	A1840265	40011117	9-6	6	A1420023	40011480	9-7B	5	A1825059
40010722	10-14D	9	A1870418	40011122	10-1E	34	A1830437	40011499	10-15D	9	A1880074
40010724	10-14D	10	A1870419	40011132	9-11A	1	A1891049	40011511	7-3B	13	A1670278
40010726	10-14D	1	A1870421	40011143	2-6	8	A1170129	40011512	9-14	11	A1096539
40010732	10-1E	37	A1830324	40011144	10-15D	1	A1880076	40011553	9-5C	24	A1823457
40010735	10-14A	9	A1870378	40011145	10-15D	2	A1880077	40011553	9-5D	24	A1823457
40010736	10-14A	10	A1870379	40011153	7-2	5	A1870453	40011581	9-5A	10	A1823534
40010737	10-14A	7	A1870382	40011192	6-4B	9	A1630242	40011581	9-5B	10	A1823534
40010739	10-14E	1	A1870426	40011192	6-4C	9	A1630242	40011581	9-5C	11	A1823534
40010811	10-1B	39	A1830774	40011193	6-4B	10	A1630243	40011581	9-5D	11	A1823534
40010812	10-1B	31	A1830767	40011193	6-4C	10	A1630243	40011581	9-5E	11	A1823534
40010815	10-1B	29	A1830772	40011201	2-6A	4	A1190115	40011581	9-5F	11	A1823534

CHASSIS (C3030/C3040)

PART NO.	FIG. NO	Key No	PART NO.	PART NO	FIG. NO	Key No	PART NO	PART NO	FIG. NO	Key No	PART NO.
40011576	9-13B	11	A1828032	40011754	2-7B	8	A1830229	40011879	9-11B	5	3A1370091
40011582	10-1E	38	A1830405	40011755	10-1A	7	A1830260	40011879	9-11C	10	3A1370091
40011590	10-16A	6	A1880015	40011755	10-1B	7	A1830260	40011879	9-12	12	3A1370091
40011590	10-16B	6	A1880015	40011755	10-1D	7	A1830260	40011879	9-13A	2	3A1370091
40011591	10-16A	2	A1880015	40011755	10-1C	7	A1830260	40011879	9-13B	2	3A1370091
40011592	10-15A	2	A1880015	40011755	10-1E	7	A1830260	40011891	4-1	9	A1225047
40011596	9-1A	5	A1896538	40011757	10-2A	4	A1840069	40011995	10-15D	11	A1880066
40011598	9-7A	10	A1825061	40011757	10-2D	3	A1840069	40012000	5-2A	17	3A1970100
40011598	9-7B	10	A1825061	40011757	10-2C	3	A1840069	40012001	5-2A	17	3A1970101
40011520	9-14A	15	A1260120	40011757	10-2D	3	A1840069	40012003	9-13A	8	A1886095
40011629	10-1A	31	A1830292	40011764	9-9A	5	A1827144	40012010	9-5A	32	A1970201D
40011629	10-1B	31	A1830292	40011764	9-9B	6	A1827144	40012010	9-5B	32	A1970201D
40011629	10-1D	31	A1830292	40011764	9-9C	6	A1827144	40012010	9-5C	26	A1970201D
40011629	10-1C	31	A1830292	40011765	9-9B	5	A1827145	40012010	9-5D	26	A1970201D
40011629	10-1E	31	A1830292	40011765	9-9C	5	A1827145	40012010	9-5E	25	A1970201D
40011630	10-2A	4	A1840061	40011770	9-9B	10	A1827154	40012010	9-5F	39	A1970201D
40011533	10-2B	4	A1840061	40011770	9-9C	10	A1827154	40012012	2-5	15	A1970201F
40011533	10-2C	4	A1840061	40011771	5-6	7	A1490024	40012013	2-5	10	A1970201G
40011533	10-2D	4	A1840061	40011775	9-14A	8	A1292127	40012013	9-5A	11	A1970201G
40011540	10-14A	21	A1520032	40011775	3-14B	6	A1292127	40012013	9-5B	11	A1970201G
40011541	10-14A	20	A1520037	40011786	9-13A	1	A1820032	40012013	9-5C	12	A1970201G
40011541	10-14B	21	A1520037	40011788	6-3	7	A1690231	40012013	9-5D	12	A1970201G
40011546	9-7A	9	A1825050	40011791	2-2	1	A1100357	40012013	9-5E	12	A1970201G
40011546	9-7B	9	A1825058	40011796	9-2	12	3A1374012	40012013	9-5F	12	A1970201G
40011563	9-2A	4	2A1822012	40011807	5-5	10	A1481042	40012014	2-6A	6	A1970201H
40011563	9-2B	4	2A1822012	40011811	9-12	8	A1896519	40012014	2-6B	6	A1970201H
40011564	9-9A	11	A1827195	40011812	3-4A	26	A1260184	40012016	2-6A	5	A1970201J
40011569	9-4C	9	A1500615	40011812	3-4B	26	A1260184	40012017	2-6B	9	A1970201K
40011572	9-5A	21	A1820250	40011812	3-4C	26	A1260184	40012020	2-1A	14	A1970380
40011580	9-8	1	A1926032	40011827	4-1	1	A1026050	40012020	2-1B	14	A1970380
40011586	10-15C	1	A1880038	40011829	5-3	9	A1410041	40012020	2-1C	15	A1970380
40011586	10-15C	2	A1880099	40011831	9-5A	25	3A1823032	40012029	9-8	26	3A1828031
40011587	10-15C	4	A1880101	40011831	9-5B	25	3A1823032	40012072	9-10B	4	3A1828014
40011592	9-5E	27	A1822159	40011831	9-5C	38	3A1823032	40012093	9-8	12	A1876036
40011592	9-5F	27	A1822159	40011831	9-5D	38	3A1823032	40012098	3-10A	8	A1281229
40011593	9-9A	1	A1827143	40011831	9-5E	37	3A1823032	40012098	3-10B	7	A1281229
40011593	9-9B	1	A1827143	40011831	9-5F	37	3A1823032	40012107	2-7A	14	3A0010947
40011594	9-9C	1	A1827143	40011840	6-2	1	A1740003	40012107	2-7B	14	3A0010947
40011594	9-14	1	A1896321	40011845	8-4C	16	A1760052	40012108	10-2B	14	A1840073
40011595	9-14	2	A1896322	40011847	6-4C	17	A1760064	40012109	10-2C	14	A1840073
40011710	10-2B	22	A1840072	40011870	9-1A	9	A1826094	40012109	10-2D	14	A1840073
40011710	10-2C	22	A1840072	40011870	9-1B	12	A1826094	40012115	2-6A	12	A1190189
40011710	10-2D	22	A1840072	40011878	3-4A	28	A1287267	40012123	5-4	19	3A1970112
40011715	10-4A	1	A1850075	40011896	2-3	3	A1100376	40012124	5-4	15	3A1970113
40011715	10-4B	1	A1850075	40011927	9-10B	8	A1828067	40012125	5-4	19	3A1970115
40011715	10-4C	1	A1850075	40011929	10-15D	19	A1990066	40012128	4-2	17	3A1326003
40011720	10-14A	5	A1870374	40011934	9-2A	10	A1822586	40012134	9-9	1	A1828043
40011720	10-14B	5	A1870374	40011934	9-2B	10	A1822586	40012135	3-6A	21	A1281368
40011720	10-14C	5	A1870374	40011935	9-8D	15	A1024038	40012135	3-6B	28	A1281368
40011720	10-14D	5	A1870371	40011936	2-2	9	3A1100008	40012136	3-2	5	A1250073
40011720	10-14E	5	A1870374	40011941	3-4C	21	A1100003	40012139	7-2	11	A1250073
40011720	3-4A	12	A1290392	40011942	3-13	4	A1292129	40012140	9-6A	18	A1823290
40011733	9-6A	9	A1193113	40011943	3-10A	19	3A1290011	40012140	9-6B	18	A1823290
40011737	9-5A	24	A1823162	40011943	3-13	14	3A1290011	40012140	9-6C	19	A1823290
40011737	9-5B	24	A1823162	40011943	3-14A	20	3A1290011	40012140	9-6D	19	A1823290
40011737	9-5C	20	A1823162	40011943	3-14B	14	3A1290011	40012140	9-6E	19	A1823290
40011737	9-5D	28	A1823162	40011950	7-3B	16	A1670269	40012140	9-6F	19	A1823290
40011737	9-5E	29	A1823162	40011954	9-7A	1	A1825033	40012145	9-6A	4	A1824026
40011737	9-5F	29	A1823162	40011954	9-7B	1	A1825033	40012147	9-6A	10	A1824028
40011738	9-5A	19	A1823176	40011957	7-1	11	3A1650010	40012148	9-6A	1	A1824043
40011738	9-5B	19	A1823176	40011961	3-2	3	A1260118	40012195	10-16A	12	A1880012
40011738	9-5C	20	A1823176	40011962	7-2	8	A1670268	40012197	10-16B	12	A1880066
40011738	9-5D	20	A1823176	40011965	9-11C	11	A1891058	40012198	9-13A	8	A1896394
40011739	9-5B	21	A1823180	40011969	2-7A	17	A1215021	40012200	9-13B	6	A1896524
40011742	9-12	15	2A1896000	40011969	2-7B	17	A1215021	40012200	9-13D	11	A1896524
40011754	2-7A	2	A1830220	40011979	9-11A	3	3A1370091	40012201	9-13B	10	A1896525

CHASSIS (C3030/C3040)

PART NO.	FIG. NO	Key No	PART NO
40012202	9-1D	7	A1896527
40012209	9-5C	38	A1023260
40012209	9-5D	30	A1023260
40012211	9-9B	25	A1827196
40012211	9-9C	26	A1827196
40012213	10-1A	5	A7200107
40012213	10-1B	5	A7200107
40012213	10-1D	5	A7200107
40012213	10-1C	5	A7200107
40012213	10-1E	5	A7200107
40012217	3-4B	14	A1250123
40012217	3-4C	14	A1250123
40012248	3-12	2	A1390017
40012254	10-1A	41	A1030231
40012254	10-1B	41	A1030231
40012254	10-1D	41	A1030231
40012254	10-1C	41	A1030231
40012255	9-12	7	A1030277
40012256	10-1A	12	A1830284
40012256	10-1B	12	A1830284
40012256	10-1D	12	A1830284
40012256	10-1C	12	A1830284
40012256	10-1E	12	A1830284
40012257	10-1A	46	A1830285
40012257	10-1B	46	A1830285
40012257	10-1D	46	A1830285
40012257	10-1C	46	A1830285
40012257	10-1E	46	A1830285
40012258	10-1A	10	A1830307
40012258	10-1B	10	A1830307
40012258	10-1D	10	A1830307
40012258	10-1C	10	A1830307
40012258	10-1E	10	A1830307
40012262	10-2B	23	A1840082
40012262	10-2C	23	A1840082
40012262	10-2D	23	A1840082
40012263	10-2B	16	A1840084
40012263	10-2C	16	A1840084
40012263	10-2D	16	A1840084
40012273	10-14A	16	A1870375
40012273	10-14B	16	A1870375
40012273	10-14C	16	A1870375
40012273	10-14D	16	A1870375
40012273	10-14E	16	A1870375
40012278	10-1A	20	A1970279
40012278	10-1B	20	A1970279
40012278	10-1D	20	A1970279
40012278	10-1C	20	A1970279
40012278	10-1E	20	A1970279
40012282	3-13	12	3A1290009
40012283	2-2	10	A1100157
40012290	4-2	13	A1324079
40012294	5-4C	12	A1760058
40012314	9-7A	13	A1825074
40012314	9-7B	12	A1825074
40012316	9-7A	8	A1825053
40012316	9-7B	8	A1825053
40012320	7-1	11	A1050093
40012338	9-10B	7	3A1829022
40012348	9-2A	11	3A1822010
40012348	9-2B	11	3A1822010
40012351	10-15D	4	A1860073
40012352	10-15D	10	A1000005
40012361	9-2	11	A1100087
40012356	9-8	24	A1826058
40012356	9-9A	30	A1826058

PART NO	FIG. NO.	Key No	PART NO
40012356	9-9B	37	A1826058
40012356	9-9C	37	A1826058
40012364	9-13A	1	A1896530
40012364	9-13B	1	A1896530
40012370	9-11A	2	A1851044
40012372	9-12	10	A1868336
40012375	9-7A	12	A1825086
40012375	9-7B	11	A1825086
40012380	7-3B	9	A1670280
40012400	7-3B	10	A1670281
40012410	9-12	2	3A1896001
40012410	9-14	7	3A1896001
40012411	9-9A	12	A1827150
40012411	9-9B	14	A1827150
40012411	9-9C	14	A1827150
40012413	9-5C	22	A1823256
40012413	9-5D	22	A1823256
40012414	8-3	11	A1830282
40012415	9-5A	17	A1823245
40012415	9-5A	21	A1823245
40012415	9-5B	17	A1823245
40012415	9-5B	21	A1823245
40012415	9-5D	18	A1823245
40012415	9-5D	18	A1823245
40012415	9-5E	18	A1823245
40012415	9-5F	18	A1823245
40012415	9-9A	9	A1823245
40012415	9-9B	11	A1823245
40012415	9-9C	11	A1823245
40012418	9-5A	30	A1823457
40012418	9-5B	30	A1823457
40012418	9-5C	39	A1823457
40012418	9-5D	39	A1823457
40012418	9-5L	41	A1823457
40012418	9-5F	41	A1823457
40012421	3-4A	9	A1C263360
40012421	3-4B	9	A1C263360
40012421	3-4C	9	A1C263360
40012421	3-13	29	A1C263360
40012421	5-5	19	A1C263360
40012423	4-2	15	3A1970123
40012423	5-3	5	3A1970123
40012426	4-2	16	3A1970122
40012426	5-3	8	3A1970122
40012427	5-2	12	3A1970119
40012427	5-4	13	3A1970119
40012428	5-3	12	3A1970120
40012428	5-4	13	3A1970120
40012429	5-3	12	3A1970121
40012447	10-15C	5	A1860102
40012448	9-13A	3	A1899087
40012448	9-13B	3	A1899087
40012449	9-13A	11	A1896088
40012450	9-13A	12	A1896089
40012451	9-13A	7	A1896092
40012452	9-13A	10	A1896090
40012453	9-13B	8	A1896526
40012467	3-14A	12	A1291164
40012467	3-14B	12	A1291164
40012484	3-12	4	A1280016
40012502	5-2B	20	A1402048
40012502	5-2C	26	A1402048
40012504	9-9B	27	A1827157
40012504	9-9C	27	A1827157
40012505	9-11	6	A1896333
40012508	2-5	17	A1700094

PART NO	FIG. NO.	Key No	PART NO
40012511	3-14A	18	A1298097
40012518	9-10B	8	3A1828021
40012522	11-2B	19	A1980955
40012522	11-2C	20	A1980955
40012525	11-2E	14	A1980956
40012525	11-2G	10	A1980956
40012529	9-12	11	A1895189
40012530	7-3A	2	A1670154
40012534	8-1	3	A1610034
40012535	8-2	2	A1741021
40012536	3-5A	11	3A1281021
40012536	3-5B	11	3A1281021
40012535	3-5D	11	3A1281021
40012536	3-5A	9	3A1281021
40012536	3-5B	15	3A1281021
40012538	11-2B	18	A1980943
40012538	11-2C	22	A1980943
40012538	11-2D	10	A1980943
40012538	11-2E	21	A1980943
40012538	11-2F	15	A1980943
40012538	11-2G	11	A1980943
40012541	9-12	14	3A1970092
40012542	9-8A	3	3A1824003
40012543	9-10B	3	3A1828010
40012551	8-1C	10	A1831018
40012552	9-8A	14	A1823158
40012552	9-8B	15	A1823158
40012552	9-8C	16	A1823158
40012554	6-2A	4	A1830135
40012554	6-2B	4	A1830135
40012558	9-10	13	A1824010
40012570	3-2	7	A1250135
40012574	3-14A	4	A1291140
40012574	3-14B	4	A1291140
40012581	3-14A	22	A1293123
40012582	3-14A	6	A1293124
40012582	3-14B	6	A1293124
40012585	10-2B	15	A1840083
40012586	10-2C	15	A1840083
40012586	10-2D	15	A1840083
40012594	9-5A	26	A1823121
40012594	9-5B	26	A1823121
40012594	9-5C	35	A1823121
40012594	9-5D	35	A1823121
40012594	9-5E	36	A1823121
40012594	9-5F	36	A1823121
40012596	2-2	7	A1100059
40012597	7-3A	1	A1670156
40012618	7-1	8	A1950079
40012619	11-2C	13	A1980837
40012619	11-2E	34	A1980837
40012619	11-2G	3	A1980837
40012620	11-2A	27	A1980842
40012622	4-1	4	A1660074
40012624	3-4A	10	3A1250013
40012624	3-4B	10	3A1250013
40012624	3-4C	10	3A1250013
40012631	9-12	4	A1096148
40012634	3-13	2	A1292126
40012635	10-1A	5	A1830258
40012635	10-1B	5	A1830258
40012635	10-1D	5	A1830258
40012635	10-1C	5	A1830258
40012635	10-1E	5	A1830258
40012637	7-3A	3	A1670152
40012664	8-3B	5	A1750290

CHASSIS (C3030/C3040)

PART NO	FIG. NO	Key No	PART NO	PART NO	FIG. NO.	Key No	PART NO.	PART NO.	FIG. NO.	Key No	PART NO.
40012654	8-3C	5	A1750290	40012731	10-1B	4	A0690218	40012882	10-1C	2	A0720034
40012655	8-3A	5	A1750120	40012731	10-1D	4	A0690218	40012882	10-1E	2	A0720034
40012658	6-2A	17	A1830320	40012731	10-1G	4	A0690218	40012884	3-12	13	A0511253
40012659	6-2B	17	A1830320	40012731	10-1E	4	A0690218	40012886	8-3A	12	A0751005
40012659	6-2A	18	A1830324	40012735	8-1A	7	A0640015	40012886	8-3B	12	A0751005
40012659	6-2B	18	A1830324	40012735	8-1B	7	A0640015	40012886	8-3C	12	A0751005
40012667	5-2D	26	A1402049	40012735	8-1C	7	A0640015	40012887	8-5A	18	A0740010
40012667	5-2C	26	A1402045	40012735	8-1D	7	A0640015	40012889	8-3A	13	A0751006
40012668	5-2B	26	A1402050	40012737	8-1A	8	A0640028	40012889	8-3B	13	A0751006
40012668	5-2C	20	A1402050	40012737	8-1B	8	A0640028	40012889	8-3C	13	A0751006
40012689	3-5A	18	A0651201	40012737	8-1C	8	A0640028	40012890	8-3A	14	A0751007
40012689	3-5B	18	A0651201	40012737	8-1D	8	A0640028	40012890	8-3B	14	A0751007
40012692	3-5A	3	A0651302	40012744	4-1D	9	A0640007	40012890	8-3C	14	A0751007
40012692	3-5B	3	A0651302	40012761	8-4A	1	A0510083	40012891	8-1A	9	A0640006
40012692	3-5C	3	A0651302	40012761	8-4B	1	A0510083	40012891	8-1B	9	A0640006
40012696	3-6A	22	A0860040	40012761	8-4C	1	A0510083	40012891	8-1C	5	A0640005
40012696	3-8B	29	A0860040	40012765	7-6A	6	A0690127	40012897	3-4A	17	A0610281
40012696	3-10A	6	A0860040	40012765	2-6B	9	A0790127	40012897	3-4B	17	A0610281
40012696	3-10B	16	A0860040	40012781	3-4A	23	Q0650006	40012897	3-4C	17	A0610281
40012697	3-10B	6	A0860050	40012781	3-4B	23	Q0650006	40012897	5-5	20	A0610281
40012698	3-7A	4	A0860090	40012781	3-4C	23	Q0650006	40012915	3-8A	15	A0880070
40012698	3-7B	4	A0860080	40012790	3-6A	16	A0610282	40012916	3-8B	22	A0880070
40012703	3-12	14	A0862050	40012790	3-6B	25	A0510282	40012919	7-1	5	A0677815
40012705	3-12	19	A0862052	40012792	9-13B	9	A0700009	40012920	3-10A	11	A0860051
40012706	3-5A	5	A0862080	40012815	3-13	9	A0850026	40012930	5-5	8	A0883020
40012706	3-5B	5	A0862080	40012823	3-5C	28	A0970458	40012931	5-5	15	A0883130
40012706	3-5C	5	A0862080	40012823	3-6B	37	A0870428	40012936	5-2B	18	A0678120
40012706	3-6A	4	A0862050	40012824	3-9A	14	A0553232	40012936	5-2C	18	A0678120
40012706	3-6B	5	A0862060	40012824	3-9B	9	A0653232	40012946	3-7A	23	A0870451
40012708	3-8B	10	A0862050	40012825	3-7A	24	A0870452	40012946	3-7B	23	A0870451
40012709	3-7A	2	A0862070	40012825	3-7B	24	A0970452	40012948	3-5A	29	A0870485
40012708	3-7B	2	A0862070	40012826	3-7A	25	A0970456	40012948	3-5B	29	A0870485
40012709	3-9A	14	A0862075	40012826	3-7B	25	A0870456	40012948	3-5C	27	A0870485
40012708	3-8B	5	A0862073	40012827	3-7A	25	A0870458	40012948	3-6A	32	A0870486
40012713	4-1	6	A0862100	40012827	3-7B	26	A0870458	40012948	3-6B	40	A0870485
40012713	5-3	8	A0862105	40012828	3-5A	34	A0970461	40012972	7-32	4	A0872210
40012713	5-4	12	A0862100	40012829	3-5B	34	A0870465	40013013	7-32	1	A1673078
40012715	3-6B	4	A0860057	40012829	3-5C	31	A0970461	40013035	5-2A	14	3014300C4
40012715	3-7A	16	A0863050	40012829	3-6A	34	A0970462	40013040	3-5C	23	A1288044
40012715	3-7B	16	A0863050	40012829	3-6B	31	A0970462	40013040	3-10A	27	A1288044
40012715	3-10A	14	A0863050	40012829	3-6C	31	A0870462	40013040	3-10C	12	A1288044
40012715	3-10B	10	A0863050	40012834	3-5A	27	A0370481	40013045	7-2	9	A1870140
40012715	3-10C	2	A0863050	40012834	3-5B	27	A0570481	40013074	4-2	1	A1324105
40012718	3-9A	2	A0863060	40012834	3-5C	25	A0370481	40027824	10-18A	9	A1877077
40012718	3-9B	2	A0863060	40012834	3-6A	30	A0370481	40027824	10-18B	5	A1877077
40012718	3-10A	13	A0863060	40012834	3-6B	35	A0370481	40027836	2-1A	12	A1877079
40012718	3-10B	12	A0863060	40012835	3-5A	26	A0570482	40027836	2-1B	12	A1877079
40012718	3-10C	7	A0863060	40012835	3-5B	28	A0370482	40027836	2-1C	12	A1877079
40012720	5-4	2	A0863070	40012835	3-5C	26	A0370402	40027836	10-16A	7	A1877079
40012720	5-5	7	A0863070	40012835	3-6A	11	A0870482	40027836	10-16B	1	A1877079
40012721	5-4	17	A0863080	40012835	3-6B	39	A0870482	40027837	5-6	8	A1877077
40012721	5-5	5	A0863080	40012845	5-4	5	A0610165	40027838	8-4C	23	A1970309
40012722	3-5A	19	A0865040	40012856	5-2B	17	A0652592	40027838	10-1E	42	A1970309
40012722	3-6B	19	A0865040	40012858	5-2C	17	A0652582	40027840	5-3	2	1A1414001
40012723	3-5A	32	A0865041	40012869	5-4	3	A0870108	40027847	10-16A	6	A1877075
40012723	3-6B	32	A0865041	40012870	5-4	3	A0870109	40027847	10-16B	2	A1877075
40012725	3-5A	21	A0869080	40012871	5-4	3	A0870110	40027955	5-2C	78	S10125543
40012725	3-5B	21	A0869080	40012874	3-4A	27	A0571520	40028157	7-3B	11	S363080013
40012725	3-5C	17	A0869080	40012874	3-4B	27	A0571520	40029157	10-1A	13	S363080013
40012725	3-6A	41	A0869080	40012874	3-4C	27	A0571520	40029157	10-1B	13	S363080013
40012729	10-1A	37	A0760137	40012880	7-3	2	A0710037	40029157	10-1D	13	S363080013
40012729	10-1B	37	A0760137	40012880	7-7A	5	A0710037	40029157	10-1C	13	S363080013
40012729	10-1D	37	A0760137	40012880	7-7B	9	A0710037	40029157	10-1F	13	S363080013
40012729	10-1C	37	A0760137	40012882	10-1A	2	A0720034	40029158	3-14A	19	S363100013
40012729	10-1E	43	A0760137	40012882	10-1B	2	A0720034	40029160	10-15C	9	S363140013
40012731	10-1A	4	A0690218	40012882	10-1D	2	A0720034	40028163	3-14A	34	S363200013

CHASSIS (C3030/C3040)

PART NO.	FIG. NO.	Key No	PART NO.	PART NO.	FIG. NO.	Key No	PART NO.	PART NO.	FIG. NO.	Key No	PART NO.
40028160	9-4C	22	S364060013	40028873	9-1A	1	S105124543	40028947	3-5A	2	S154102033
40028169	9-9	10	S364080013	40028873	9-1B	1	S105124543	40028947	3-5B	2	S154102033
40028160	9-6A	8	S364000013	40028870	10-15C	12	S105124543	40028947	3-5C	2	S154102033
40028165	9-8D	9	S364080013	40028875	3-4A	22	S105125543	40028947	3-12	21	S154102033
40028166	9-9A	20	S364080013	40028875	3-4B	22	S105125543	40028947	6-2A	2	S154102033
40028171	3-2	9	S364100013	40028875	3-4C	22	S105125543	40028947	6-2B	2	S154102033
40028171	7-2	15	S364100013	40028876	9-1A	6	S105125043	40028947	7-1	12	S154102033
40028171	7-3B	18	S364100013	40028876	9-1B	6	S105120043	40028947	9-15	10	S154102033
40028172	2-2	2	S364120013	40028879	9-1A	5	S105125543	40028947	10-2A	6	S154102033
40028172	2-3	8	S364120013	40028879	9-1B	5	S105125543	40028947	10-2B	6	S154102033
40028175	2-13	28	S364160013	40028889	9-3	1	S107109043	40028947	10-2C	6	S154102033
40028175	9-10A	5	S364160013	40028896	9-10B	10	S107144543	40028947	10-2D	6	S154102033
40028179	9-10B	13	S364160013	40028903	2-4A	5	S133123523	40028948	3-1	2	S154102533
40028184	7-2	2	S364200013	40028903	3-4B	5	S133123523	40028948	3-4A	3	S154102533
40028184	2-1A	13	S365082013	40028903	3-4C	5	S133123523	40028948	3-4B	3	S154102533
40028184	2-1B	13	S365082013	40028909	2-1A	11	S153051613	40028948	3-4C	3	S154102533
40028184	2-1C	14	S365082013	40028909	2-1B	11	S153051613	40028948	3-10A	22	S154102533
40028196	10-14A	18	S365082613	40028913	2-1C	11	S153051613	40028948	3-10B	15	S154102533
40028196	10-14B	20	S365082613	40028913	9-5C	10	S153063033	40028948	3-10C	10	S154102533
40028196	10-14C	20	S365082613	40028913	9-5D	10	S153063033	40028948	8-3	3	S154102533
40028196	10-14D	20	S365082613	40028913	9-5E	10	S153063033	40028949	5-2A	10	S154103033
40028198	10-14E	20	S365082613	40028913	9-5F	10	S153063033	40028949	5-2B	3	S154103033
40028234	6-1	8	S365164013	40028914	6-4A	8	S153063533	40028949	5-2C	3	S154103033
40028583	3-10A	9	S220202021	40028914	6-4B	8	S153063533	40028950	2-6A	11	S154103533
40028583	3-10B	7	S220202021	40028914	6-4C	8	S153063533	40028950	2-6B	11	S154103533
40028674	10-2B	24	S220802511	40028914	9-5A	8	S153063533	40028951	9-5	13	S154105033
40028674	10-2C	24	S220802511	40028914	9-5B	8	S153063533	40028954	9-5A	16	S154105533
40028674	10-2D	24	S220802511	40028914	9-5C	20	S153063533	40028954	9-5B	16	S154105533
40028692	8-3A	23	S224402511	40028914	9-5D	20	S153063533	40028954	9-5C	16	S154105533
40028692	8-3B	23	S224402511	40028914	9-5E	20	S153063533	40028954	9-5D	16	S154105533
40028692	8-3C	23	S224402511	40028914	9-5F	20	S153063533	40028954	9-5E	16	S154105533
40028719	10-15C	16	S301060043	40028915	9-5A	4	S153064033	40028954	9-5F	16	S154105533
40028720	7-3B	20	S301080013	40028915	9-5B	4	S153064033	40028959	2-7A	2	S154123533
40028720	9-9A	18	S301080013	40028915	9-5C	8	S153064033	40028959	2-7B	2	S154123533
40028721	3-2	6	S301100043	40028915	9-5D	6	S153064033	40028959	5-1	6	S154123533
40028721	7-2	12	S301100043	40028915	9-5E	5	S153064033	40028961	10-15D	13	S154124533
40028726	5-2D	27	S301120043	40028915	9-5F	8	S153064033	40028966	8-1A	10	S156062033
40028727	10-15C	7	S301140043	40028916	9-5A	1	S153064533	40028966	8-1B	10	S156062033
40028728	9-14	6	S301160043	40028916	9-5B	1	S153064533	40028966	8-1C	10	S156062033
40028729	10-15D	8	S301180043	40028916	9-5C	1	S153064533	40028966	8-1D	10	S156062033
40028747	9-7A	14	S302100043	40028916	9-5D	1	S153064533	40028967	8-4A	14	S156062533
40028747	9-7B	13	S302100043	40028916	9-5E	1	S153064533	40028967	8-4B	14	S156062533
40028752	5-6	14	S302160043	40028916	9-5F	1	S153064533	40028967	8-4C	12	S156062533
40028755	9-11C	8	S302200043	40028917	9-5A	5	S153065033	40028970	9-3A	21	S156081533
40028763	8-2	8	S305060013	40028917	9-5B	5	S153065033	40028970	9-3B	6	S156081533
40028764	8-4A	2	S305060013	40028917	9-5C	5	S153065033	40028970	9-3C	21	S156081533
40028765	8-4B	2	S305060043	40028917	9-5D	5	S153065033	40028971	2-5	18	S156082033
40028765	8-4C	2	S305060043	40028917	9-5E	5	S153065033	40028971	2-5A	10	S156082033
40028766	9-7A	16	S305080043	40028917	9-5F	5	S153065033	40028971	8-2	7	S156082033
40028766	9-7B	17	S305080043	40028918	9-1A	10	S153081533	40028971	9-7A	5	S156082033
40028768	10-15D	20	S305080043	40028918	9-1B	10	S153081533	40028971	9-7D	6	S156082033
40028769	9-9A	7	S305100013	40028918	9-8	23	S153081533	40028971	9-15	11	S156082033
40028769	9-9B	8	S305100013	40028921	9-5A	26	S153082033	40028973	9-5A	27	S156082533
40028769	9-9C	8	S305100013	40028921	9-5B	26	S153082033	40028973	9-5B	27	S156082533
40028771	3-4A	7	S305120013	40028923	5-1	6	S153082533	40028973	9-5C	34	S156082533
40028771	3-4B	7	S305120013	40028923	5-12	20	S153082533	40028973	9-5D	34	S156082533
40028771	3-4C	7	S305120013	40028923	5-2B	16	S153082533	40028973	9-5E	35	S156082533
40028771	10-18A	12	S305120013	40028923	5-2C	18	S153082533	40028973	9-5F	35	S156082533
40028771	10-18B	13	S305120013	40028923	5-5E	26	S153082533	40028973	9-10B	5	S156082533
40028771	4-2	14	S305120043	40028923	9-5I	26	S153082533	40028973	9-2A	6	S156082533
40028771	3-4A	4	S105123543	40028930	9-8A	3	S153086033	40028973	9-2D	6	S156082533
40028771	3-4B	4	S105123543	40028930	9-9B	3	S153086033	40028973	7-3A	6	S156082533
40028771	3-4C	4	S105123543	40028930	9-9C	3	S153086033	40028986	10-4A	8	S156102533
40028773	3-4A	15	S105124543	40028931	10-15C	12	S153086033	40028986	10-4B	4	S156102533
40028773	3-4B	15	S105124543	40028930	5-2A	2	S153123533	40028986	10-4C	4	S156102533
40028773	3-4C	15	S105124543	40028947	3-4A	28	S154102033	40028987	6-3	12	S156102033

CHASSIS (C3030/C3040)

PART NO.	FIG. NO.	Key No	PART NO.	PART NO.	FIG. NO.	Key No	PART NO.	PART NO.	FIG. NO.	Key No	PART NO.
40029097	10-15A	6	S15601C033	40029040	9-5A	8	S313080013	40029079	10-4A	9	S346100013
40029095	7-3A	4	S15601C033	40029040	9-5B	8	S313080013	40029079	10-4B	5	S346100013
40029092	9-9	10	S157061633	40029040	9-7A	19	S313080013	40029079	10-4C	5	S346100013
40029097	9-9A	32	S157061633	40029040	9-7B	21	S313080013	40029084	9-11C	7	S352200013
40029092	9-9B	20	S157061633	40029041	9-2A	5	S313080043	40029087	2-3	9	S073120023
40029092	9-9C	20	S157061633	40029041	9-2B	5	S313080043	40029096	5-5	21	S471100013
40029096	2-4	4	S159061633	40029041	9-5C	9	S313080043	40029101	3-1	5	S123081610
40029099	8-3A	15	S159061633	40029041	9-5D	9	S313080043	40029102	3-4A	8	S423102010
40029098	8-3B	15	S159061633	40029041	9-5E	9	S313080043	40029102	3-4B	9	S423102010
40029090	8-3C	15	S159061633	40029041	9-5F	9	S313080043	40029102	3-4C	8	S423102010
40029098	8-4C	16	S159061633	40029041	9-5G	10	S313080043	40029102	5-5	24	S471102010
40029098	10-1A	33	S159061633	40029047	2-5	4	S314100013	40029106	3-2	9	S471102010
40029098	10-1B	33	S159061633	40029047	9-14A	16	S314100013	40029111	10-15C	10	S471161023
40029098	10-1D	33	S159061633	40029049	2-7A	4	S314120013	40029120	2-2	6	S441251013
40029090	10-1C	33	S159061633	40029049	2-7B	4	S314120013	40029121	3-2	10	S441252010
40029098	10-1E	33	S159061633	40029051	6-3	17	S314140013	40029121	7-2	16	S441252013
40029098	10-14A	22	S159061633	40029051	9-14	10	S314140013	40029121	7-3B	17	S441252013
40029004	9-7A	21	S159081633	40029052	2-7A	15	S314160013	40029127	6-1	7	S441403013
40029004	9-7B	21	S159081633	40029052	2-7B	16	S314160013	40029128	9-13A	6	S441404013
40029004	9-5B	24	S159081633	40029052	9-1CB	14	S314160013	40029130	2-2	8	S443090013
40029004	9-9C	21	S159081633	40029071	9-1CC	19	S314040013	40029130	2-3	6	S443090013
40029004	9-12	9	S159081633	40029072	10-1A	32	S345050013	40029131	7-3B	12	S443090013
40029004	10-14A	16	S159081633	40029072	10-1B	32	S345050013	40029131	10-1A	14	S443090013
40029004	10-14B	17	S159081633	40029072	10-1D	32	S345050013	40029131	10-1B	14	S443090013
40029004	10-14C	17	S159081633	40029072	10-1C	32	S345050013	40029131	10-1D	14	S443090013
40029004	10-14D	17	S159081633	40029072	10-1E	32	S345050013	40029131	10-1C	14	S443090013
40029004	10-14F	17	S159081633	40029073	8-4A	11	S345060013	40029131	10-1E	14	S443090013
40029006	9-9A	17	S159082033	40029073	8-4B	11	S345060013	40029132	3-14A	20	S443120013
40029006	9-9B	22	S159082033	40029073	10-1A	35	S345060013	40029132	7-3B	14	S443120013
40029006	9-9C	22	S159082033	40029073	10-1B	35	S345060013	40029133	2-2	9	S443120013
40029006	10-1A	24	S159082033	40029073	10-1D	35	S345060013	40029133	2-6A	9	S443120013
40029006	10-1B	24	S159082033	40029073	10-1C	35	S345060013	40029133	2-6B	8	S443120013
40029006	10-1D	24	S159082033	40029073	10-1F	35	S345060013	40029133	7-2	13	S443120013
40029006	10-1E	24	S159082033	40029075	2-4	5	S345080013	40029134	10-15C	11	S443140013
40029006	10-1C	24	S159082033	40029075	9-5A	28	S345080013	40029153	3-13	8	S446032010
40029006	10-2A	11	S159082033	40029075	9-5B	28	S345080013	40029157	9-6B	14	S446042012
40029006	10-2B	11	S159082033	40029075	9-5C	37	S345080013	40029162	3-12	7	S446053210
40029006	10-2C	11	S159082033	40029075	9-5D	37	S345080013	40029164	4-1	17	S446054012
40029006	10-2D	11	S159082033	40029075	9-5E	36	S345080013	40029167	3-13	3	S446062510
40029006	10-14A	17	S159082033	40029075	9-5F	36	S345080013	40029167	3-14A	3	S446062510
40029006	10-14B	18	S159082033	40029075	9-8	16	S345080013	40029167	3-14B	3	S446062510
40029006	10-14C	18	S159082033	40029075	9-5A	22	S345080013	40029172	3-14A	7	S446063512
40029006	10-14D	18	S159082033	40029075	9-5B	29	S345080013	40029172	3-14B	7	S446063512
40029006	10-14E	18	S159082033	40029075	9-5C	29	S345080013	40029174	4-2	11	S446065010
40029007	10-16A	10	S159082013	40029076	9-10C	3	S345080013	40029175	6-3	11	S446065012
40029007	10-16B	11	S159082013	40029076	10-1A	8	S345080013	40029176	7-3B	6	S446082012
40029008	2-5	6	S159082033	40029076	10-1B	9	S345080013	40029179	4-1	8	S446084012
40029008	2-6B	10	S159082033	40029076	10-1D	9	S345080013	40029179	7-2	7	S446084012
40029008	10-16C	18	S159082033	40029076	10-1C	9	S345080013	40029187	10-1A	28	S466321010
40029014	5-6	12	S167162623	40029076	10-1E	9	S345080013	40029187	10-1B	28	S466321010
40029021	8-3A	6	S226502511	40029076	10-2A	12	S345080013	40029187	10-1D	28	S466321010
40029021	8-3C	6	S226502511	40029076	10-2B	12	S345080013	40029187	10-1C	28	S466321010
40029022	10-1A	40	S234401613	40029076	10-2C	12	S345080013	40029187	10-1E	28	S466321010
40029022	10-1B	40	S234401613	40029076	10-2D	12	S345080013	40029187	11-2A	34	S466321010
40029022	10-1D	40	S234401613	40029076	10-14A	18	S345080013	40029187	11-2B	33	S466321010
40029022	10-1C	40	S234401613	40029076	10-14B	19	S345080013	40029187	11-2C	36	S466321010
40029027	10-15C	21	S306100043	40029076	10-14C	16	S345080013	40029187	11-2D	16	S466321010
40029031	5-6	8	S306100013	40029076	10-14D	19	S345080013	40029187	11-2E	36	S466321010
40029034	6-1	2	S306100043	40029076	10-14E	19	S345080013	40029187	11-2F	32	S466321010
40029040	2-3	11	S313080013	40029076	10-14A	14	S345080013	40029187	11-2G	39	S466321010
40029040	6-4A	1	S313080013	40029076	10-15B	4	S345080013	40029193	9-6A	5	S801100010
40029040	6-4B	1	S313080013	40029079	10-1A	47	S346100013	40029193	9-6B	5	S801100010
40029040	6-4C	1	S313080013	40029079	10-1B	47	S346100013	40029195	9-8	22	S801100020
40029040	6-4A	6	S313080013	40029079	10-1D	47	S346100013	40029195	9-9A	28	S801100020
40029040	6-4B	6	S313080013	40029079	10-1C	47	S346100013	40029195	9-9B	35	S801100020
40029040	8-4C	9	S313080013	40029079	10-1E	49	S346100013	40029195	9-9C	35	S801100020

CHASSIS (C3030/C3040)

PART NO.	FIG. NO.	Key No	PART NO	PART NO	FIG. NO.	Key No	PART NO	PART NO.	FIG. NO.	Key No	PART NO
40029198	3-13	22	S801010A10	40029254	3-4A	19	S804070010	40029300	3-7B	5	S811068001
40029196	3-14A	30	S801010A10	40029254	3-4B	19	S804070010	40029301	3-7A	1	S811072001
40029196	3-14B	15	S801010A10	40029254	3-4C	19	S804070010	40029301	3-7B	1	S811072001
40029197	9-3	7	S801011010	40029254	3-9A	19	S804070010	40029301	3-9A	10	S811072001
40029198	9-3	9	S801011010	40029254	3-9B	7	S804070010	40029301	3-9B	4	S811072001
40029199	3-14A	26	S801012010	40029254	3-10A	20	S804070010	40029304	5-4	14	S811090001
40029200	9-2A	7	S801012020	40029254	3-10B	13	S804070010	40029304	5-5	6	S811090001
40029200	9-2B	7	S801012020	40029254	3-10C	8	S804070010	40029305	5-5	14	S811140001
40029201	9-2A	12	S801014010	40029259	9-13C	6	S810010001	40029309	3-5C	32	S812032001
40029201	9-2B	12	S801014010	40029259	2-7A	11	S810012001	40029311	6-2A	5	S813035001
40029201	9-13C	14	S801014010	40029259	2-7B	11	S810012001	40029311	6-2B	5	S813035001
40029202	9-2	2	S801014020	40029259	9-7A	11	S810012001	40029314	9-2A	3	S814006003
40029202	9-2	21	S801014020	40029259	9-7B	10	S810012001	40029314	9-2B	3	S814006003
40029202	9-9A	27	S801014020	40029261	3-13	8	S810016001	40029314	9-8A	7	S814006003
40029202	9-9B	34	S801014020	40029262	9-13B	6	S810016002	40029314	9-8B	8	S814006003
40029202	9-9C	34	S801014020	40029265	3-10A	4	S810020001	40029314	9-7A	15	S814006003
40029203	3-14A	32	S801013010	40029265	3-14A	35	S810020001	40029314	9-7B	19	S814006003
40029204	3-13	5	S801016010	40029265	6-3	4	S810020001	40029318	9-8A	9	S814009003
40029204	3-14A	5	S801016010	40029270	3-5C	24	S810022001	40029318	5-6B	11	S814009003
40029204	3-14B	5	S801016010	40029270	3-10A	1	S810022001	40029321	3-10	27	S814015001
40029204	4-1	10	S801016010	40029270	3-10B	3	S810022001	40029322	9-10B	2	S814015000
40029204	5-5C	27	S801016010	40029270	3-10C	1	S810022001	40029348	10-16A	11	S810105543
40029204	9-5D	27	S801016010	40029271	3-10A	13	S810025001	40029348	10-16B	10	S810105543
40029204	9-5E	28	S801016010	40029271	3-10B	17	S810025001	40029362	5-9A	6	S810102543
40029204	9-5F	28	S801016010	40029271	3-10C	1	S810025001	40029362	9-9D	7	S810102543
40029204	9-6A	2	S801016010	40029271	7-2	5	S810025001	40029362	5-9C	7	S810102543
40029204	9-6B	21	S801016010	40029273	3-5A	37	S810030001	40029381	5-2B	7	S810112043
40029205	5-1A	7	S801016010	40029273	3-5E	31	S810030001	40029381	5-2C	7	S810112043
40029205	5-4B	7	S801016010	40029273	3-5C	30	S810030001	40029395	10-15B	4	S810114543
40029205	5-4C	7	S801016010	40029273	3-7A	20	S810030001	40029395	5-10A	9	S810114543
40029206	9-3	10	S801016010	40029273	3-7B	20	S810030001	40029395	5-10B	17	S810114543
40029206	9-5A	2	S801016010	40029273	3-10A	16	S810030001	40029395	5-14	12	S810114543
40029206	9-5B	2	S801016010	40029273	3-10C	5	S810030001	40029397	5-2B	24	S810114043
40029206	9-5C	2	S801016010	40029273	3-12	16	S810030001	40029397	5-2C	24	S810114043
40029206	9-5D	2	S801016010	40029273	5-4	5	S810030001	40029397	5-5	20	S810114043
40029206	9-5F	2	S801016010	40029274	3-6A	15	S810032001	40029397	5-11A	5	S810114043
40029206	9-5F	9	S801016010	40029274	3-5B	15	S810032001	40029397	5-11B	3	S810114043
40029206	9-6	11	S801016010	40029274	3-6A	16	S810032001	40029397	5-11C	9	S810114043
40029209	4-1	12	S801021010	40029274	3-6B	23	S810032001	40029397	10-15A	4	S810114043
40029211	7-1	10	S801025010	40029274	3-7A	7	S810032001	40029397	10-15D	13	S810114043
40029211	7-2	17	S801025010	40029274	3-7B	7	S810032001	40029399	7-3B	8	S810114543
40029212	5-2A	26	S801033010	40029276	3-9A	15	S810036001	40029407	10-15C	6	S810119043
40029217	3-12	5	S801046010	40029276	3-9B	11	S810038001	40029419	5-11C	4	S810125553
40029217	3-12	11	S801046010	40029277	3-5A	22	S810040001	40029449	10-10D	6	S810161243
40029217	6-2A	12	S801046010	40029277	3-5B	22	S810040001	40029469	5-8	8	S810125043
40029217	6-2B	10	S801046010	40029277	3-5C	15	S810040001	40029472	2-7A	7	S810149043
40029222	3-12	3	S802043010	40029277	3-10A	3	S810040001	40029472	2-7B	7	S810149043
40029223	9-1A	12	S802045010	40029278	9-1A	14	S810042001	40029474	5-6	11	S810153043
40029223	9-1B	12	S802045010	40029278	9-1E	14	S810042001	40029477	5-1	5	S810154543
40029225	3-12	5	S802060010	40029280	3-6A	33	S810050001	40029482	5-10B	12	S810157043
40029228	5-2A	4	S802075010	40029284	7-1	6	S810060001	40029491	10-16C	15	S816062043
40029229	5-2A	6	S802080010	40029292	3-5A	33	S811032001	40029495	9-2A	8	S816085043
40029230	5-2B	22	S802090010	40029292	3-5B	33	S811032001	40029496	9-2B	9	S816085043
40029230	5-2C	22	S802090010	40029294	6-3	5	S811042001	40029496	9-7A	10	S816085043
40029234	5-2A	13	S802175010	40029296	3-12	10	S811052001	40029499	9-7B	20	S816085043
40029238	3-10A	25	S804030010	40029299	3-5A	23	S811062001	40029500	5-2C	29	S816126543
40029242	3-10B	4	S804070010	40029299	3-5B	23	S811062001	40029525	4-1	14	S816132543
40029246	9-5A	14	S804070010	40029299	3-5C	19	S811062001	40029540	2-4	7	S816080013
40029246	9-5B	14	S804070010	40029299	3-6A	2	S811062001	40029546	6-4A	2	S816080013
40029246	9-5C	15	S804070010	40029299	3-6B	2	S811062001	40029546	6-4B	2	S816080013
40029246	9-5D	15	S804070010	40029299	3-7A	15	S811062001	40029546	6-4C	2	S816080013
40029246	9-5E	15	S804070010	40029299	3-7B	15	S811062001	40029546	5-2A	13	S816080013
40029246	9-5F	15	S804070010	40029299	3-10A	17	S811062001	40029546	5-2B	13	S816080013
40029252	3-5A	4	S804060010	40029299	3-10B	9	S811062001	40029546	9-5A	7	S816080013
40029252	3-5B	4	S804060010	40029299	3-10C	3	S811062001	40029546	9-5D	7	S816080013
40029252	3-5C	4	S804060010	40029300	3-7A	5	S811068001	40029546	5-5C	8	S816080013

CHASSIS (C3030/C3040)

PART NO.	FIG. NO	Key No	PART NO.	PART NO.	FIG. NO	Key No	PART NO	PART NO	FIG. NO	Key NO	PART NO.
40029646	9-5C	0	S3611090013	40036067	5-3	7	A1324082	40223404	10-14F	1	
40029646	9-5E	8	S3611090013	40036066	5-4	4	A1400121	40223406	10-2E	17	
40029646	9-5F	8	S3611090013	40036066	5-4	10	A1400124	40223407	10-1F	38	
40029646	10-15D	22	S3611090013	40036067	5-4	6	A1400153	40223408	10-2F	18	
40029646	10-16B	14	S3611090013	40036068	5-3	1	A1400172	40223409	10-1F	20	
40029649	9-5	9	S3611100013	40036079	5-3D	14	A1400200	40223410	10-1F	37-45	
40029649	9-2B	2	S3611100013	40036079	5-3C	14	A1400688	40223411	10-1F	30	
40029649	9-2C	2	S3611100013	40036080	5-4	18	A1402044	40223412	10-2F	8	
40029649	9-3	2	S3611100013	40036082	5-4	21	A1402068	40223414	10-14F	10	
40029649	9-7A	2	S3611100013	40036101	5-2	4	A1287651				
40029649	9-7B	2	S3611100013	40036319	9-15	21	A1829033				
40029649	10-15C	23	S3611100013	40036320	9-15	2	A1829037				
40029651	2-7A	3	S3611200013	40036321	9-15	5	A1829040				
40029651	2-7B	3	S3611200013	40036322	9-15	3	A1829042				
40029651	3-4A	6	S3611200013	40036323	9-15	4	A1829043				
40029651	3-4B	6	S3611200013	40036342	9-13C	21	A1996384				
40029651	3-4C	6	S3611200013	40036343	9-15	6	A1996400				
40029651	5-2A	12	S3611200013	40036344	9-13C	23,24	A1996669				
40029651	5-2B	8	S3611200013	40036358	9-12C	20	A3340048				
40029651	5-2C	8	S3611200013	40049470	3-4B	12	A1280165				
40029651	9-1A	2	S3611200013	40049470	3-4C	12	A1280168				
40029651	9-1B	2	S3611200013	40049750	9-13C	22	A1896329				
40029651	9-6	9	S3611200013	40049959	9-13C	7	A1896461				
40029651	10-15C	13	S3611200013	40056618	9-13C	4	S1630416 13				
40029653	2-7A	6	S3611400013	40056627	9-12C	5	S3010400 13				
40029653	2-7B	6	S3611400013	40059250	10-1C	30	A1930328				
40029653	5-2B	23	S3611400013	40059254	10-1E	29	A1930325				
40029653	5-2C	23	S3611400013	40059311	5-4	19	A1970114				
40029653	5-6	22	S3611400013	40059361	8-4A	8	A1760041				
40029653	5-3	15	S3611400013	40059364	8-4B	9	A1760041				
40029653	7-3B	0	S3611400013	40059364	8-4C	13	A1760041				
40029653	9-10A	2	S3611400013	40059366	8-4C	20	A1760048				
40029653	9-10B	3	S3611400013	40067166	5-1	3	A1400130				
40029653	9-10B	16	S3611400013	40067167	5-1	3	A1400131				
40029653	9-11A	4	S3611400013	40067168	5-1	3	A1400132				
40029653	9-11B	2	S3611400013	40067306	9-15	9	A1829040				
40029653	9-11C	2	S3611400013	40067306	9-15	10	A1829066				
40029653	9-12	5	S3611400013	40067310	9-15	20	A1829067				
40029653	9-14	9	S3611400013	40150628	8-4B	8-11	A1630566				
40029653	10-15A	3	S3611400013	40150828	8-4C	8-11	A1630566				
40029653	10-15B	5	S3611400013	40150890	9-15	1-8	A1529054				
40029653	10-15C	8	S3611400013	40150899	9-13C	1-18	A1806499				
40029653	10-15D	15	S3611400013	40151580	9-15	12-17	A1CM5903				
40029655	2-7A	15	S3611600013	40151582	9-15	15-17	A1CM5904				
40029655	2-7D	15	S3611600013	40151585	9-15	16-18	A1CM5905				
40029655	3-14A	10	S3611600013	40152756	8-4A	7	A1760042				
40029655	5-1	4	S3611600013	40152756	8-4B	7	A1760042				
40029655	5-6	10	S3611600013	40154361	9-15	13	A1823357				
40029655	5-6	13	S3611600013	40154741	9-15	15	A1823373				
40029655	15-15D	7	S3611600013	40154742	9-15	16	A1823374				
40029667	9-2	3	S3630060013	40156748	9-13C	1	A1896498				
40029667	10-1A	42	S3630060013	40156041	9-15	14	A1823359				
40029667	10-1B	42	S3630060013	40156850	9-15	8	A1828046				
40029667	10-1D	42	S3630060013	40156860	9-15	7	A1829058				
40029667	10-1C	42	S3630060013	40156915	9-13C	23	A1896563				
40032211	3-7A	22	A1370274	40156927	9-15	1	A1529055				
40032211	3-7B	22	A1370274	40156936	8-4B	8	A1630567				
40032463	9-13C	12	A1630157	40156936	8-4C	8	A1630567				
40032898	9-13C	15	A1896374	40156958	9-13C	9	A1896497				
40032896	9-13C	18	A1896375	40156966	9-15	12	A1823372				
40032900	9-13C	8	A1896463	40160001	10-1F	41	A1961139				
40032901	9-13C	2	A1896480	40213639	10-1E	24	-				
40033278	10-14B	9	A1870496	40223401	10-2E	10	-				
40033279	10-14B	10	A1870497	40223402	10-14F	7	-				
40034532	6-2	2	A1630222	40223403	10-2E	9					
40036051	5-3	4	A1324080	40223403	10-14F	9	-				